EPA-600/R-97/121

EPA TRACEABILITY PROTOCOL FOR ASSAY AND CERTIFICATION OF GASEOUS CALIBRATION STANDARDS

September 1997

U.S. Environmental Protection Agency (MD-47)
National Exposure Research Laboratory
Human Exposure and Atmospheric Sciences Division
Research Triangle Park, NC 27711

EPA-600/R-97/121

EPA TRACEABILITY PROTOCOL FOR ASSAY AND CERTIFICATION OF GASEOUS CALIBRATION STANDARDS

September 1997

U.S. Environmental Protection Agency (MD-47)
National Exposure Research Laboratory
Human Exposure and Atmospheric Sciences Division
Research Triangle Park, NC 27711

ADDENDUM

Monitoring needs for acid deposition, and source and ambient air quality may exceed inventories of SRMs and PRMs available for required traceability of standards. To facilitate support for research and monitoring projects for which standards of traditional NIST or equivalent traceability are unavailable, the Traceability Protocol, as revised September 1997, incorporates the use of Research Gas Mixtures (RGMs). Candidate RGMs will be analyzed and certified by NIST under their RGM program, and assertions as to stability and quality will be as specified by NIST. Standards certified against RGMs may be used directly only for calibration or audit, and may not be used to certify subordinate standards. Enquiries about the RGM program should be directed to NIST at the address given below.

National Institute of Standards and Technology
Analytical Chemistry Division
Chemical Science and Technology Laboratory
B-324 Chemistry
Gaithersburg, MD 20899

TABLE OF CONTENTS

Section		Page
	List of Figures	ix
	List of Tables	x
	Acknowledgments	xi
	Glossary	xiii
1	INTRODUCTION	1-1
2	EPA TRACEABILITY PROTOCOL FOR ASSAY AND CERTIFICATION OF COMPRESSED GAS CALIBRATION STANDARDS	2-1
	2.1 GENERAL INFORMATION	2-1
	2.1.1 Purpose and Scope of the Protocol	2-1
	2.1.2 Reference Standards	2-1
	2.1.2.1 Gas Manufacturer's Intermediate Standard	2-4
	2.1.2.2 Recertification of Reference Standards	2-5
	2.1.3 Using the Protocol	2-5
	2.1.4 Certification Documentation	2-5
	2.1.5 Certification Label	2-6
	2.1.6 Assay/Certification of Compressed Gas Calibration Standards	2-6
	2.1.6.1 Incubation of Newly Prepared Compressed Gas Calibration Standards	2-6
	2.1.6.2 Stability Test for Reactive Gas Mixtures	2-6
	2.1.6.3 Certification Periods for Compressed Gas Calibration Standards	2-7
	2.1.6.4 Minimum Cylinder Pressure	2-9
	2.1.6.5 Assay/Certification of Multicomponent Compressed Gas Calibration Standards	2-9
	2.1.7 Analyzer Calibration	2-10
	2.1.7.1 Basic Analyzer Calibration Requirements	2-10
	2.1.7.2 Analyzer Multipoint Calibration	2-10
	2.1.7.3 Zero and Span Gas Checks	2-13
	2.1.7.4 Reference Standards for Multipoint Calibrations and Zero and Span Gas Checks	2-14
	2.1.7.5 Uncertainty of the Calibration Curve	2-14
	2.1.8 Uncertainty of the Estimated Concentration of the Candidate Standard	2-15
	2.1.9 Zero Gas	2-17
	2.1.10 Accuracy Assessment of Commercially Available Standards	2-17
	2.2 PROCEDURE G1: ASSAY AND CERTIFICATION OF A COMPRESSED GAS CALIBRATION STANDARD WITHOUT DILUTION	2-18
	2.1.1 Applicability	2-18

TABLE OF CONTENTS (continued)

Section		Page
2.2.2	Limitations	2-18
2.2.3	Assay Apparatus	2-18
2.2.4	Pollutant Gas Analyzer	2-20
2.2.5	Analyzer Calibration	2-20
2.2.5.1	Multipoint Calibration	2-20
2.2.5.2	Analyzer Range	2-20
2.2.5.3	Linearity	2-20
2.2.5.4	Zero and Span Gas Checks	2-21
2.2.6	Assay Gases	2-22
2.2.6.1	Candidate Standard	2-22
2.2.6.2	Reference Standard	2-22
2.2.6.3	Zero Gas	2-23
2.2.7	Assay Procedure	2-23
2.2.8	Stability Test for Newly Prepared Candidate Standards	2-24
2.2.9	Certification Documentation	2-25
2.2.10	Recertification Requirements	2-25
2.3	PROCEDURE G2: ASSAY AND CERTIFICATION OF A COMPRESSED GAS CALIBRATION STANDARD USING DILUTION	2-25
2.3.1	Applicability	2-25
2.3.2	Limitations	2-25
2.3.3	Assay Apparatus	2-26
2.3.4	Pollutant Gas Analyzer	2-29
2.3.5	Analyzer Calibration	2-29
2.3.5.1	Multipoint Calibration	2-29
2.3.5.2	Analyzer Range	2-30
2.3.5.3	Linearity	2-30
2.3.5.4	Zero and Span Gas Checks	2-30
2.3.6	Selection of Gas Dilution Flow Rates or Gas Concentration Settings	2-32
2.3.7	Flowmeter Type and Flowmeter Calibration	2-32
2.3.8	Assay Gases	2-33
2.3.8.1	Candidate Standard	2-33
2.3.8.2	Reference Standard	2-34
2.3.8.3	Zero Gas	2-34
2.3.9	Assay Procedure	2-34
2.3.10	Stability Test for Newly Prepared Standards	2-36
2.3.11	Certification Documentation	2-37
2.3.12	Recertification Requirements	2-37
3	EPA TRACEABILITY PROTOCOL FOR ASSAY AND CERTIFICATION OF PERMEATION DEVICE CALIBRATION STANDARDS	3-1

TABLE OF CONTENTS (continued)

Section **Page**

3.1 GENERAL INFORMATION 3-1
3.1.1 Purpose and Scope of the Protocol 3-1
3.1.2 Reference Standards 3-1
3.1.3 Selecting a Procedure 3-2
3.1.4 Using the Protocol 3-3
3.1.5 Certification Documentation 3-3
3.1.6 Certification Label 3-4
3.1.7 Assay/Certification of Candidate Permeation Device Calibration Standards 3-4
3.1.7.1 Permeation Device Design 3-4
3.1.7.2 Precautions for Use and Storage of Permeation Devices 3-4
3.1.7.3 Equilibration of Newly Prepared Permeation Devices 3-5
3.1.7.4 Certification Conditions for Permeation Device Calibration Standards 3-5
3.1.8 Technical Variances 3-5

3.2 PROCEDURE P1: ASSAY AND CERTIFICATION OF PERMEATION DEVICE CALIBRATION STANDARDS REFERENCED TO A PERMEATION DEVICE REFERENCE STANDARD 3-6
3.2.1 Applicability 3-6
3.2.2 Limitations 3-6
3.2.3 Assay Apparatus 3-7
3.2.4 Pollutant Gas Analyzer 3-9
3.2.5 Analyzer Calibration 3-9
3.2.5.1 Multipoint Calibration 3-9
3.2.5.2 Analyzer Range 3-10
3.2.5.3 Linearity 3-10
3.2.5.4 Zero and Span Gas Checks 3-10
3.2.6 Selection of Gas Dilution Flow Rates 3-10
3.2.7 Flowmeter Type and Flowmeter Calibration 3-10
3.2.8 Permeation Devices 3-11
3.2.8.1 Candidate Standard 3-11
3.2.8.2 Reference Standard 3-11
3.2.8.3 Zero Gas 3-11
3.2.9 Assay Procedure 3-12
3.2.10 Stability Test for Newly Prepared Permeation Devices 3-14
3.2.11 Certification Documentation 3-14
3.2.12 Recertification Requirements 3-15

TABLE OF CONTENTS (continued)

Section		Page
3.3	PROCEDURE P2: ASSAY AND CERTIFICATION OF PERMEATION DEVICE CALIBRATION STANDARDS REFERENCED TO A COMPRESSED GAS REFERENCE STANDARD	3-15
3.3.1	Applicability	3-15
3.3.2	Limitations	3-15
3.3.3	Assay Apparatus	3-15
3.3.4	Pollutant Gas Analyzer	3-17
3.3.5	Analyzer Calibration	3-18
3.3.5.1	Multipoint Calibration	3-18
3.3.5.2	Analyzer Range	3-19
3.3.5.3	Linearity	3-19
3.3.5.4	Zero and Span Gas Checks	3-19
3.3.6	Selection of Gas Dilution Flow Rates	3-19
3.3.7	Flowmeter Type and Flowmeter Calibration	3-19
3.3.8	Candidate Standard	3-20
3.3.9	Reference Standard	3-20
3.3.10	Zero Gas	3-21
3.3.11	Assay Procedure	3-21
3.3.12	Equilibrium Test for Newly Prepared Permeation Devices	3-24
3.3.13	Certification Documentation	3-24
3.3.14	Recertification Requirements	3-24
3.4	PROCEDURE P3: ASSAY AND CERTIFICATION OF PERMEATION DEVICE CALIBRATION STANDARDS REFERENCED TO A MASS REFERENCE STANDARD	3-24
3.4.1	Applicability	3-24
3.4.2	Limitations	3-24
3.4.3	Assay Apparatus	3-25
3.4.3.1	Analytical Balance	3-25
3.4.3.2	Temperature-Controlled Chamber	3-25
3.4.3.3	Electrostatic Charge Neutralization	3-27
3.4.4	Weighing Interval	3-27
3.4.5	Assay Procedure	3-28
3.4.6	Number of Weighings of the Candidate Standard	3-29
3.4.7	Calculation of Certified Permeation Rate	3-29
3.4.8	Uncertainty of Certified Permeation Rate for Candidate Standard	3-31
3.4.9	Certification Documentation	3-31
3.4.10	Recertification Requirements	3-31
4	REFERENCES	4-1

TABLE OF CONTENTS (continued)

Appendix		Page
A	INSTRUCTIONS FOR CALIBRATION WORKBOOK	A-1
B	INSTRUCTION FOR PERMEATION RATE WORKBOOK	B-1
C	CALCULATION OF TOTAL ANALYTICAL UNCERTAINTY	C-1
D	MATRIX NOTATION	D-1

LIST OF FIGURES

Number		Page
2-1	Example regression curve and confidence bands from multipoint calibration	2-12
2-2	One possible design of the apparatus for the assay of compressed gas calibration standards without dilution (Procedure G1)	2-19
2-3	One possible design of the apparatus using flow controllers for assay of compressed gas calibration standards with dilution (Procedure G2)	2-27
2-4	One possible design of the apparatus using a gas dilution system for assay of compressed gas calibration standards with dilution (Procedure G2)	2-28
3-1	One possible design of the apparatus for the assay of permeation device calibration standards referenced to a permeation device reference standard (Procedure P1)	3-8
3-2	One possible design of the apparatus for the assay of permeation device calibration standards referenced to a compressed gas reference standard (Procedure P2)	3-16
3-3	Chamber for maintaining permeation tubes at constant temperature	3-26
3-4	Example of spreadsheet graphic output for calculating permeation rates	3-30

LIST OF TABLES

Number		Page
2-1	SUMMARY OF COMPRESSED GAS SRMs THAT ARE AVAILABLE FROM NIST	2-2
2-2	SUMMARY OF COMPRESSED GAS PRMs THAT ARE AVAILABLE FROM NMi	2-3
2-3	CERTIFICATION PERIODS FOR COMPRESSED GAS CALIBRATION STANDARDS IN ALUMINUM CYLINDERS THAT ARE CERTIFIED UNDER THIS PROTOCOL	2-8
2-4	SOME LINEARIZING TRANSFORMATIONS FOR MULTIPOINT CALIBRATION DATA	2-16
3-1	NIST SRM PERMEATION DEVICE REFERENCE STANDARDS	3-2

ACKNOWLEDGMENTS

The information in this document has been funded wholly by the U.S. Environmental Protection Agency (EPA) under Contract No. 68D40091 to the Research Triangle Institute (RTI), Research Triangle Park, North Carolina.

This traceability protocol was prepared by Robert S. Wright and Michael J. Messner of RTI under RTI Project No. 91U-6699-208. It is a revision of an earlier protocol that was prepared in 1993 by the same authors. The authors thank the EPA work assignment manager, Berne I. Bennett, for his guidance and technical discussion as the protocol was being written. The authors also thank the following RTI staff members who provided administrative, technical, editorial, word-processing, and graphic arts support: Malcolm J. Bertoni, Michael Y. Cross, W. Cary Eaton, Tonda J. Gentry, Beryl C. Pittman, Helen M. Reading, Sue S. Preston, and Jan L. Shirley.

This protocol was reviewed by personnel of EPA, the National Institute of Standards and Technology (NIST), and the Netherlands Measurement Institute (NMi) as it was being prepared. The authors wish to thank the following individuals for their technical assistance:

Pamela M. Chu (NIST)
Ed W.B. DeLeer (NMi)
Willliam D. Dorko (NIST)
David L. Duewer (NIST)
Gerald D. Mitchell (NIST)
John T. Schakenbach (EPA)
Rob Wessel (NMi)

Numerous comments from specialty gas producers provided useful comments and suggestions for revisions to this protocol. The authors thank the following organizations for their assistance:

Airgas, Inc.
Air Liquide America Corporation
Air Products and Chemicals, Inc.
BOC Gases
Matheson Gas Products
MG Industries
Praxair, Inc.
Scott-Marrin, Inc.
Scott Specialty Gases, Inc.
Spectra Gases, Inc.

GLOSSARY

ANSI	American National Standards Institute
ASTM	American Society for Testing and Materials
GMIS	Gas Manufacturer's Intermediate Standard
ILAC	International Laboratory Accreditation Program
ISO	International Standardization Organization
NIST	National Institute of Standards and Technology
Nmi	Netherlands Measurement Institute
NTRM	NIST Traceable Reference Material
NVLAP	National Voluntary Laboratory Accreditation Program
PRM	Primary Reference Material
RGM	Research Gas Mixture
SRM	Standard Reference Material

SECTION 1

INTRODUCTION

In 1993, the U.S. Environmental Protection Agency (EPA) in Research Triangle Park, North Carolina, revised its 1987 version of its traceability protocol for the assay and certification of compressed gas and permeation-device calibration standards.[1,2] The protocol allows producers of gaseous standards, users of gaseous standards, and other analytical laboratories to establish traceability between their protocol gases and gaseous Standard Reference Materials (SRMs) produced by the National Institute of Standards and Technology (NIST). Parts 50, 58, 60, and 75 of Title 40 of the *Code of Federal Regulations* (CFR) require using SRMs or gaseous standards traceable to SRMs for calibrating and auditing ambient air and stationary source pollutant monitoring systems.[3-6]

As the protocol was being revised, the 1987 version was published in the January 11, 1993, issue of the *Federal Register.* It was inserted as Appendix H to 40 CFR Part 75, which concerns the Acid Rain Program. In April 1996, EPA's Acid Rain Program suggested that the 1987 and 1993 versions of the protocol be consolidated into a single protocol. In discussions at that time, RTI suggested that the protocol be revised in a manner that would allow EPA Protocol Gases to be produced either with the higher accuracy (within ±2 percent) needed by EPA's Acid Rain Division or with less stringent accuracy requirements that might be acceptable to other users. In 1997, RTI solicited additional suggested revisions from specialty gas producers and other interested parties.

The purpose of this work assignment was to revise the statistical procedures in the 1993 version of the protocol and to consolidate its two published versions in order to make the revised protocol useful to EPA's Acid Rain Division as well as other users. Improvement of the statistical procedures had the highest priority.

The current revision has several significant changes from the 1993 version as listed below:

1. Statistical techniques are used to calculate the total uncertainty of the candidate standard. Data from the multipoint calibration and the assays are used in these calculations (see Section 2.1.4);

2. The uncertainty of reference standards is now included in the calculation of the total uncertainty of the candidate standard (see Section 2.1.2);

3. Statistical techniques are used to calculate the stability of candidate standards. The intermediate performance standard of 1 percent agreement between assays has been deleted (see Section 2.1.6.2);

4. Statistical spreadsheets were developed to assist in these calculations, but equivalent statistical techniques may also be used. These spreadsheets replace most of the manual calculations required in the 1993 version of the protocol (see Appendices A through D).

5. Multipoint calibration data may be fitted to straight-line, quadratic, cubic, or quartic linear regression models by the spreadsheets, although the use of cubic and quartic models is discouraged (see Appendix A);

6. If a quadratic or higher-order model is used to fit the multipoint calibration data, at least two reference standards, having different concentrations, must be measured during the assays (see Section 2.2.7);

7. The correction for minor calibration drift following the multipoint calibration is embedded in the spreadsheets' calculation of the uncertainty of a single assay;

8. Primary Reference Standards from the Netherlands Measurement Institute (NMi) are accepted as being equivalent to SRMs from NIST (see Section 2.1.2);

9. The analyst may substitute a low-concentration reference standard in the place of the zero gas during assays of the candidate standard (see Section 2.1.9);

10. A summary of EPA's audit results from 1992 to the present is available at an EPA website, http://www.epa.gov/ttn, (see Section 2.1.10);

11. A strip chart recorder is no longer required as part of the assay apparatus, but a high-precision data acquisition system must produce an electronic or paper record of the analyzer's response during assays. This record must be maintained for 3 years after the standard's certification date (see Section 2.2.4).

SECTION 2

EPA TRACEABILITY PROTOCOL FOR ASSAY AND CERTIFICATION OF COMPRESSED GAS CALIBRATION STANDARDS

2.1 GENERAL INFORMATION

2.1.1 Purpose and Scope of the Protocol

This protocol describes two procedures for assaying the concentration of compressed gas calibration standards and for certifying that the assayed concentrations are traceable to a National Institute of Standards and Technology (NIST) Standard Reference Material (SRM). This protocol is mandatory for certifying the compressed gas calibration standards used for the pollutant monitoring that is required by the regulations of 40 CFR Parts 50, 58, 60 and 75 for the calibration and audit of ambient air quality analyzers and continuous emission monitors. This protocol may be used to assay and certify gas mixtures that have the same components as compressed gas SRMs. A multiple-component standard may be assayed and certified under this protocol if compressed gas SRMs that contain the individual components in the standard exist. This protocol may be used by specialty gas producers, standard users, or other analytical laboratories. The assay procedure may involve the direct comparison of the standards to reference standards without dilution (i.e., Procedure G1) or the indirect comparison of the standards to reference standards with dilution (i.e., Procedure G2). A candidate standard having a concentration that is lower or higher than that of the reference standard may be certified under this protocol if both concentrations (or diluted concentrations) fall within the well-characterized region of the pollution gas analyzer's calibration curve. This protocol places no restrictions on cylinder sizes and the same analytical procedures must be used in assays of all cylinder sizes.

2.1.2 Reference Standards

Parts 50, 58, 60, and 75 of the monitoring regulations require that gaseous pollutant concentration standards used for calibration and audit of ambient air quality analyzers and continuous emission monitors be traceable to either a NIST SRM or a NIST Traceable Reference Material (NTRM).[7] In 1996, NIST and the Netherlands Measurement Institute (NMi) issued a joint declaration that specific NMi Primary Reference Materials (PRMs)[8] can be considered as being equivalent to the corresponding NIST SRMs. The compressed gas SRMs that are available from NIST are listed in Table 2-1. The current SRM-equivalent compressed gas PRMs that are available from NMi are listed in Table 2-2. Other gas mixtures are under study by NIST and NMi and they may be added to the Declaration of Equivalence. PRMs produced by other national metrology organizations will be considered equivalent to NIST SRMs when a declaration of equivalence is issued jointly by NIST and the national metrology organization. The generic terms "Primary Reference Material" and "PRM" are used in this document to refer to any SRM-equivalent standard that has received such equivalency status.

The uncertainty of SRMs, NTRMs, and PRMs is expressed as a 95-percent confidence interval, which is the one-sigma uncertainty multiplied by a coverage factor almost always equal to

TABLE 2-1. SUMMARY OF COMPRESSED GAS SRMs THAT ARE AVAILABLE FROM NIST[a]

Certified component	Balance gas	Concentration[b] range for SRMs
Ambient nonmethane organics (15 components)	Nitrogen	5 ppb
Ambient toxic organics (19 components)	Nitrogen	5 ppb
Aromatic organic gases[c]	Nitrogen	0.25 to 10 ppm
Carbon dioxide	Air	345 to 365 ppm
Carbon dioxide	Nitrogen	0.5 to 16 percent
Carbon monoxide	Air	10 to 45 ppm
Carbon monoxide	Nitrogen	10 ppm to 13 percent
Carbon monoxide, propane, and carbon dioxide	Nitrogen	1.6 to 8 percent CO 600 to 3,000 ppm C_3H_8 0 to 14 percent CO_2
Hydrogen sulfide	Nitrogen	5 to 20 ppm
Methane	Air	1 to 10 ppm
Methane	Nitrogen	50 to 100 ppm
Methane and propane	Air	4 ppm CH_4, 1 ppm C_3H_8
Nitric oxide	Nitrogen	5 to 3,000 ppm
Oxides of nitrogen (i.e., nitrogen dioxide plus nitric acid)	Air	100 ppm
Oxygen	Nitrogen	2 to 21 percent
Propane	Air	0.25 to 500 ppm
Propane	Nitrogen	100 ppm to 2 percent
Sulfur dioxide	Nitrogen	50 to 3,500 ppm

[a] All SRMs may not be available at all times. Other compressed gas SRMs may be developed in the future and could be used as reference standards. Contact NIST for information about SRM availability at (301) 975-6776 or http://gases.nist.gov.
[b] SRM concentrations are by mole.
[c] Aromatic organic gases are benzene, bromobenzene, chlorobenzene, and toluene.

TABLE 2-2. SUMMARY OF COMPRESSED GAS PRMs THAT ARE AVAILABLE FROM NMi[a]

Certified component	Balance gas	Concentration range for PRMs[b]
Carbon dioxide	Nitrogen	100 ppm to 15 percent
Carbon monoxide	Nitrogen	100 ppm to 6 percent
Ethanol	Nitrogen	100 to 259 ppm
Nitric oxide	Nitrogen	10 to 4000 ppm
Oxygen	Nitrogen	2 to 22 percent
Propane	Nitrogen	500 to 3000 ppm
Sulfur dioxide	Nitrogen	100 to 3500 ppm

[a] Information about PRMs can be obtained from:

Nederlands Meetinstituut B.V.
Van Swinden Laboratorium
Department of Chemistry
P.O. Box 654
2600 AR DELFT
The Netherlands
Telephone: 31 15 269 16 80
Telefax: 31 15 261 29 71
E-mail: SecChemie@NMi.nl

The NMi office in the United States is:

NMi USA, Inc.
36 Gilbert Street South
Tinton Falls, NJ 07701
P.O. Box 7758
Shrewsbury, NJ 07701
Telephone: (908) 842-8900
Telefax: (908) 842-0304
E-mail: NMiUSANJ@aol.com

SRM-equivalent PRMs from other national metrology organizations may be added in the future. Users of this protocol will be advised if such additions occur.

[b] Within the listed ranges, any concentration is available. PRMs are prepared individually in 5-L cylinders according to ISO Standard 6142 (Gas Analysis–Preparation of calibration gas mixtures-weighing methods). After preparation, the composition is verified against Dutch Primary Standard Gas Mixtures. The stability is normally guaranteed for a period of 2 years. Uncertainties depend on the certified concentration and vary from 0.1 percent (relative) for binary mixtures to 1.0 percent (relative) maximum for certain constituents in multicomponent mixtures.

2.[9] This estimate includes allowances for the uncertainties of known sources of systematic error as well as the random error of measurement. A value of one-half of the stated uncertainty of these reference standards should be used in calculating the total analytical uncertainty of standards that are certified under this protocol (see Appendix C).

The EPA regulations define a "traceable" standard as one that has been compared and certified, either directly or via not more than one intermediate standard, to a primary standard such as a NIST SRM or an NTRM.[3,4] Comparison of a candidate standard directly to an SRM, an SRM-equivalent PRM, or an NTRM is preferred and recommended. However, the use of a Gas Manufacturer's Intermediate Standard (GMIS) (see Subsection 2.1.2.1) in the comparison is permitted. A GMIS is an intermediate reference standard that has been compared directly to an

SRM, an SRM-equivalent PRM, or a NTRM according to Procedure G1. It is an acceptable reference standard for the assay of candidate standards. However, purchasers of standards that have been compared to a GMIS should be aware that, in conformity with the above definition, such a standard could only be used directly for calibration or audit. Such a standard could not be used as a second-generation intermediate reference standard to certify other compressed gas calibration standards.

Accordingly, the reference standard used for assaying and certifying a compressed gas calibration standard under this protocol must be an SRM, a NTRM, an SRM-equivalent PRM, or a GMIS. The reference standard must be within its certification period.

Volume reference standards must be traceable to NIST primary standards by calibration at a NIST-accredited state weights and measures laboratory or at a calibration laboratory that is accredited by the National Voluntary Laboratory Accreditation Program (NVLAP) or by the International Laboratory Accreditation Conference (ILAC).[10,11] These volume reference standards are required for assays using procedure G2 (see Subsection 2.3.7).

2.1.2.1 Gas Manufacturer's Intermediate Standard—

A GMIS is a compressed gas calibration standard that has been assayed by direct comparison to an SRM, an SRM-equivalent PRM, or a NTRM, that has been assayed and certified according to Procedure G1, and that also meets the following requirements:

1. A candidate GMIS must be assayed on at least three separate dates that are uniformly spaced over at least a 3-month period. During each of these assays, the candidate GMIS must be measured at least three times. All these assays must use the same SRM, SRM-equivalent PRM, or NTRM as the reference standard to avoid errors associated with the use of different reference standards for different assays.

2. For each assay, the analyst must calculate the mean and 95-percent uncertainty for the three or more measured concentrations of the candidate GMIS according to the statistical procedures described in Appendix A or equivalent statistical techniques. The 95-percent uncertainty must be less than or equal to 1.0 percent of the mean concentration.

3. After the three or more assays have been completed, the analyst must calculate the overall mean estimated concentration and the 95-percent uncertainty for the candidate GMIS using the spreadsheet described in Appendix C or equivalent statistical techniques.

4. If the 95-percent confidence limits (i.e., estimated concentration plus or minus uncertainty) for the assays overlap, the candidate GMIS can be considered to be stable and can be used as a reference standard for assays of candidate standards. In the Appendix C spreadsheet, all cells in the comparisons table will be "true." If the confidence limits do not overlap, the candidate GMIS may be unstable or there may be analytical problems associated with the assays or the reference standards. One or more cells in the comparisons table will be "false." The analyst must either disqualify the candidate GMIS or investigate why the confidence limits do not overlap. The analyst may discard the data from a questionable assay and then conduct another assay. The candidate GMIS can be used as a reference standard if the confidence

limits for the remaining assays and the new assay overlap. The candidate GMIS cannot be used if it appears to be unstable.

5. A GMIS must be recertified every 2 years. Use the spreadsheet described in Appendix C or equivalent statistical techniques to compare the confidence limits from a single recertification assay with the confidence limits from the previous assays. If the confidence intervals overlap, the GMIS can be recertified. If the reassayed GMIS fails to meet this requirement, it must undergo a full certification as described in Step 1 above before it can be used again. There is no requirement that the same reference standard must be used in the original assays and the recertification assay, but this practice is desirable if possible.

2.1.2.2 Recertification of Reference Standards—

Recertification requirements for SRMs and NTRMs are specified by NIST. Recertification requirements for PRMs are specified by NMi. See Subsection 2.1.2.1 for GMIS recertification requirements.

2.1.3 Using the Protocol

The assay/certification protocol described here is designed to minimize both systematic and random errors in the assay process. Therefore, the protocol should be carried out exactly as it is described. The assay procedures in this protocol include one or more possible designs for the assay apparatus. The analyst is not required to use these designs and may use alternative components and configurations that produce equivalent-quality measurements. Inert materials (e.g., Teflon®, stainless steel, or glass) and clean, noncontaminating components should be used in those portions of the apparatus that are in contact with the gas mixtures being assayed.

2.1.4 Certification Documentation

Each certified compressed gas calibration standard must be documented in a written certification report and this report must contain at least the following information:

1. Cylinder identification number (e.g., stamped cylinder number).

2. Certified concentration for the compressed gas calibration standard, in parts per million by mole or mole percent. This value should be reported to 3 significant digits. The certified concentration is the mean of all assayed concentrations for which the candidate standard is considered to be stable.

3. Balance gas in the gas mixture.

4. Cylinder pressure at certification and the statement that the standard should not be used when its gas pressure is below 1.0 megapascals (i.e., 150 psig).

5. Date of the assay/certification.

6. Certification expiration date (i.e., the certification date plus the certification period) (see Subsection 2.1.6.3).

7. Identification of the reference standard used in the assay: NIST SRM number, NIST sample number, cylinder identification number and certified concentration for an SRM; cylinder identification number and certified concentration for an SRM-equivalent PRM, a NTRM, or a GMIS. The certification documentation must identify the reference standard as being an SRM, an SRM-equivalent PRM, a NTRM, or a GMIS.

8. Statement that the assay/certification was performed according to this protocol and that lists the assay procedure (e.g., Procedure G1) used.

9. The analytical method that was used in the assay.

10. Identification of the specialty gas producer or other laboratory (i.e., name and location) where the standard was assayed and certified. This identification must be given in the same or larger font as the other required information in the report.

11. Chronological record of all certifications for the standard.

12. If applicable, statement that the certified concentration of specified component has been corrected for analytical interferences from other specified components.

13. An estimate of the total uncertainty associated with the assay of the candidate standard. This estimate must include the uncertainties of the reference standards, the analyzer multipoint calibration, and any interference correction. Use the spreadsheet described in Appendix C or equivalent statistical techniques to calculate the total uncertainty.

This certification documentation must be given to the purchaser of the standard. The specialty gas producer must maintain laboratory records and certification documentation for 3 years after the standard's certification date. A specialty gas producer or other vendor may redocument an assayed and certified standard that it has purchased from another specialty gas producer and that it wishes to sell to a third party. However, the new certification documentation must clearly identify the specialty gas producer or other laboratory (i.e., name and location) where the standard was assayed.

2.1.5 Certification Label

A label or tag bearing the information described in items 1-6, 8, and 10 of Subsection 2.1.4 must be attached to the standard.

2.1.6 Assay/Certification of Compressed Gas Calibration Standards

2.1.6.1 Incubation of Newly Prepared Compressed Gas Calibration Standards—

Newly prepared compressed gas calibration standards must be incubated at least 4 days before being assayed and certified.

2.1.6.2 Stability Test for Reactive Gas Mixtures—

Compressed gas calibration standards that contain reactive gas mixtures, including hydrogen sulfide (H_2S), nitric oxide (NO), oxides of nitrogen (NO_x), sulfur dioxide (SO_2), and carbon monoxide (CO), and that have not been previously certified, must be tested for stability as discussed herein. Conduct an initial assay of the candidate standard and determine a concentration for the

standard. The candidate standard must be measured at least three times during the assay. Reassay the standard at least 7 days after the first assay. Use the spreadsheet described in Appendix C or equivalent statistical techniques to compare the 95-percent confidence limits for the two assays. If the confidence limits overlap, the candidate standard can be considered to be stable and can be certified. In the spreadsheet, all cells in the comparisons table will be "true." If the confidence intervals do not overlap, the candidate standard may be unstable or there may be analytical problems associated with the assays or the reference standards. The analyst must wait an additional 7 days or more and conduct a third assay. If the confidence interval for the third assay overlaps either of the two previous assays, the candidate standard can be certified using the data from the two overlapping assays to determine the certified concentration and the total uncertainty. The analyst must disqualify the candidate standard if none of the three confidence intervals overlap. The analyst should investigate the cause of the lack of agreement among the three assays and should correct any problems that are discovered.

2.1.6.3 Certification Periods for Compressed Gas Calibration Standards—

The certification of a compressed gas calibration standard is valid for only a specified period following its certification date, which is the date of its last assay. In general, the certification period should be no longer than the period for which similar standards have been shown to be stable.[12-14] The certification periods for various standards are specified in Table 2-3. These certification periods are for standards that are contained in aluminum cylinders. In general, the certification period for standards that are contained in nonaluminum cylinders is 6 months. However, an exception is made for the following three gas mixtures: carbon dioxide with a concentration >0.5 percent; oxygen with a concentration >0.8 percent; and propane with a concentration >0.1 percent. The certification period for standards containing these three gas mixtures in nonaluminum cylinders is given in Table 2-3.

If a standard is to be used after its certification period has ended, it must be recertified in accordance with this protocol. The recertification assay must be performed using the same analytical procedure (e.g., Procedure G1) as was used for the original assay of the standard. The purpose of this assay is to determine whether the standard has remained stable since its original certification. The standard must be measured at least three times during the recertification assay. A second assay is not needed for recertification of the standard. There is no requirement that the same reference standard must be used in the original and recertification assays, although this practice is desirable if possible. Record the results of the recertification assay in the laboratory's records. Use the spreadsheet described in Appendix C or equivalent statistical techniques to compare the confidence limits for the recertification assay with those for the previous assays. If the confidence limits overlap, the standard can be recertified. The second certification period for the standard is the same as that given in Table 2-3.

A standard that was certified under this protocol may be recertified by a laboratory other than the one that performed the original certification. In such a case, the 95-percent confidence limits for the recertification assay must overlap the certified concentration plus or minus the total uncertainty that was given in the original certification documentation. If the confidence limits do not overlap, a second recertification assay must be conducted and the confidence limits for the two recertification assays must overlap before the standard can be recertified. The recertification documentation must list the information from the original certification documentation plus the corresponding information from the recertification assays. Both the original and the recertification laboratories must be identified in the recertification documentation.

TABLE 2-3. CERTIFICATION PERIODS FOR COMPRESSED GAS CALIBRATION STANDARDS IN ALUMINUM CYLINDERS THAT ARE CERTIFIED UNDER THIS PROTOCOL

Certified components	Balance gas	Applicable concentration range	Certification period (months)
Ambient nonmethane organics (15 components)	Nitrogen	5 ppb	24
Ambient toxic organics (19 components)	Nitrogen	5 ppb	24
Aromatic organic gases	Nitrogen	≥0.25 ppm	36
Carbon dioxide	Nitrogen or air[a]	≥300 ppm	36
Carbon monoxide	Nitrogen or air	≥8 ppm	36
Hydrogen sulfide	Nitrogen	≥4 ppm	12
Methane	Nitrogen or air	≥1 ppm	36
Nitric oxide	Oxygen-free nitrogen[b]	≥4 ppm	24
Nitrous oxide	Air	≥300 ppb	36
Oxides of nitrogen (i.e., sum of nitrogen dioxide and nitric acid)	Air	≥80 ppm	24
Oxygen	Nitrogen	≥0.8%	36
Propane	Nitrogen or air	≥1 ppm	36
Sulfur dioxide	Nitrogen or air	40 to 499 ppm	24
Sulfur dioxide	Nitrogen or air	≥500 ppm	36
Multicomponent mixtures	—	—	See text
Mixtures with lower concentrations	—	—	See text

[a] When used as a balance gas, "air" is defined as a mixture of oxygen and nitrogen where the minimum concentration of oxygen is 10 percent and the concentration of nitrogen is greater than 60 percent.
[b] Oxygen-free nitrogen contains <0.5 ppm of oxygen.

The spreadsheet described in Appendix C to calculate the total analytical uncertainty of a candidate standard has provision for data from only three assays. If more than three assays are conducted, only the data from the three most recent assays should be used in the spreadsheet.

The certification periods given in Table 2-3 apply to specific concentration ranges over which the gas mixtures have been found to be stable. These concentration ranges match the concentration ranges for NIST SRMs. The protocol described here allows the certification of standards with concentrations that may be lower than those of the corresponding SRMs. If the concentration of the standard is less than the applicable concentration range given in Table 2-3, the initial certification period for the standard is 6 months. After this period, the standard must be recertified before further use. The standard must be measured at least three times during the recertification assay. If the confidence limits for the recertification assay overlap those for the previous assays, the standard may be recertified for the period shown in Table 2-3. For example,

a 35-ppm sulfur dioxide in nitrogen standard will have an initial certification period of 6 months. After a successful recertification, this standard will have a recertification period of 24 months.

If the confidence limits from the recertification assay do not overlap those from the original assays, the analyst must either disqualify the standard for further use under this protocol or investigate why there is an apparent difference between the original assays and the recertification assay. This difference may be due to an actual instability of the gas mixture, to a reference standard problem, to an analytical instrumentation problem, or to some other problem. If the analyst can find a reasonable explanation for the difference and if this cause is not instability, then the standard can be recertified. The analyst must append a brief report on the investigation to the recertification documentation and to the laboratory's records.

A multiple-component standard can be certified for a period equal to that of its most briefly certifiable component. For example, a standard containing sulfur dioxide, carbon monoxide, and propane in nitrogen can be certified for 24 months because the shortest certification period is 24 months.

A standard may be recertified if the gas pressure remaining in the cylinder is greater than 3.4 megapascals (i.e., 500 psig).

2.1.6.4 Minimum Cylinder Pressure—

In general, a compressed gas calibration standard should not be used when its gas pressure is below 1.0 megapascals (i.e., 150 psig). NIST has found that some gas mixtures (e.g., nitric oxide in nitrogen) have exhibited a concentration change when the cylinder pressure fell below this value.

2.1.6.5 Assay/Certification of Multicomponent Compressed Gas Calibration Standards—

This protocol may be used to assay and certify a multiple-component standard if compressed gas SRMs, SRM-equivalent PRMs, or NTRMs exist that contain the individual components of the multiple-component standard. If any component in the multiple-component standard interferes with the assay of any other component, the analyst must conduct an interference study to determine an interference correction equation. This study must be conducted using the same analyzer or analyzers as will be used to assay the standard. The study must use single-component and multiple-component reference standards that have been assayed using interference-free analyzers. The study must cover the same range of concentrations for all components as will exist for the standards being assayed and certified according to this protocol.

Data from the interference study must be evaluated using multiple-variable least-squares regression analysis. The analyst should consult with a statistician before beginning the study or evaluating its data. The regression analysis must produce an interference correction equation and an estimate of the 95-percent uncertainty associated with the corrected concentrations for the assayed components. The interference correction equation will be valid for the range of concentrations covered in the study for which the uncertainty of the corrected concentration is ≤ 1 percent of the corrected concentration. The analyst must add the interference correction uncertainty to the total uncertainty of the standard. The certification documentation must include a statement that the certified concentration of a specified component has been corrected for interferences from other specified components. An interference study is not needed if the assay analyzer is interference free.

2.1.7 Analyzer Calibration

2.1.7.1 Basic Analyzer Calibration Requirements—

The assay procedures described in this protocol employ a data reduction technique to calculate the concentration of a candidate compressed gas standard that corrects for minor analyzer calibration variations (i.e., drift). This technique does not require the absolute accuracy of the analyzer's calibration curve at the time of the assay. Requirements for the analyzer follow: (1) it must have a well-characterized calibration curve for the pollutant of interest (see Subsection 2.1.7.2); (2) it must have good resolution and low noise; (3) its calibration must be known and must be reasonably stable or recoverable during the assay/certification process; and (4) all measurements of candidate standards must fall within a well-characterized region of its calibration curve.

2.1.7.2 Analyzer Multipoint Calibration—

The gas analyzer used for the assay must have had a multipoint calibration within 1 month prior to the assay date. This calibration is not used directly to interpret analyzer response during the assay of the candidate compressed gas calibration standard. The data reduction technique corrects the analyzer response on the assay date for any minor calibration drift during the period between the multipoint calibration and the assay date. The corrected analyzer response is then used with the multipoint calibration data to calculate a concentration value for the candidate standard.

The analyzer's zero and span controls may be adjusted before the start of the multipoint calibration. If a zero or span adjustment is made, allow the analyzer to stabilize for at least one hour before beginning the multipoint calibration. The waiting period is necessary because some analyzers' calibrations drift for a period of time following a zero or span control adjustment.

The multipoint calibration must consist of one or more measurements of the analyzer responses to at least five different concentrations. The use of a zero gas in the calibration is recommended, but is not required. Record these measurements and the analyzer's zero and span control settings in the laboratory's records. These calibration concentrations should be approximately evenly spaced over the concentration range. The multipoint calibration is valid only for the concentration range lying between the largest and smallest measured concentrations. The concentrations may be produced by undiluted reference standards or by dilution of reference standards using a gas dilution system. See Subsection 2.1.7.4 for reference standard requirements. If a gas dilution system is used, it must have a specified accuracy of no worse than 1.0 percent of the undiluted reference standard concentration. The accuracy of the gas dilution system must be checked by the analyst at monthly intervals by comparing diluted reference standards to undiluted reference standards having approximately the same concentration.

If the analyzer has multiple concentration ranges, a multipoint calibration should be done for all ranges that will be used later for the assay of candidate standards. A multipoint calibration that is conducted on one range is not valid for an assay that is conducted on another range.

Data from the multipoint calibration must be evaluated using least-squares regression analysis.[15] This statistical analysis technique will be used to determine the analyzer's calibration curve and to characterize the uncertainty associated with the calibration. The concentration values are the independent (i.e., X) values in the analysis and their units may be parts per million, mole percent, or any other appropriate units. The analyzer response values are the dependent (i.e., Y)

values in the analysis and their units may be volts, millivolts, percent of scale or any other measurable analyzer response units. The analyzer response values should have a resolution of less than or equal to 1 percent of the maximum measured analyzer response.

Because an analyzer's response has a random error component, repeated measurements of the same reference standard will not produce identical analyzer responses. The analyst may investigate the analyzer's precision by making replicate measurements of multiple reference standards. Least-squares regression analysis is normally conducted under the assumption that the precision is the same at all concentrations. However, this assumption may not be true for real-world analyzers and the analyst may need to use alternate statistical procedures to analyze the multipoint calibration data.

Calculate the least-squares regression coefficients of the calibration equation using the spreadsheets described in Appendix A or using equivalent statistical techniques (e.g., the worksheet for linear relationships given in Chapter 5 of Reference 15). The spreadsheets allow the multipoint calibration data to be fitted to straight-line, quadratic, cubic, or quartic linear regression models. EPA discourages the use of the cubic and quartic models and believes that better fits of the data can be obtained by performing multipoint calibrations over more limited concentration ranges and by using straight-line or quadratic models. Inclusion of cubic and quartic models in the spreadsheets is for experimental use or for situations in which there is a theoretical basis for the use of such higher-order models. Analysts should be aware that apparent higher-order calibration curves may be caused by artifacts such as inaccurate reference standards or leaks in a gas dilution system. They should not use higher-order regression models to fit multipoint calibration data that have inadequate precision and that should be fitted to lower-order regression models. If analysts suspect that the precision is inadequate, they should make replicate measurements at each different concentration. Additionally, a multipoint calibration should not change regression model orders from one month to the next.

The spreadsheet described in Appendix A will suggest the best regression model for the multipoint calibration data, but the analyst should choose the model that best fits the measurement process on theoretical grounds.

Plot the values from the multipoint calibration and the regression curve with confidence bands as shown in Figure 2-1. These plots will provide a graphical representation of the calibration and will permit a qualitative assessment of the uncertainty associated with the calibration. Record the regression coefficients and other statistical results in the laboratory's records.

However, a quantitative assessment of the calibration's uncertainty is needed to allow the analyst to determine whether the multipoint calibration data adequately characterizes the "true" calibration curve for the analyzer. The criterion to be used to evaluate the uncertainty of the multipoint calibration is the 95-percent uncertainty (i.e., $\alpha = 0.05$) for a concentration predicted from the regression line using measured values of the analyzer response. This 95-percent uncertainty for the predicted concentration can be calculated using the spreadsheets described in Appendix A or using equivalent statistical techniques. Record the uncertainty calculations in the laboratory's records. A multipoint calibration will be considered to be well-characterized for all concentrations that are within the range of the multipoint calibration measurements and for which the magnitude of the 95-percent confidence limits for the regression-predicted analyzer response are $\leq \pm 1$ percent of the measured response for the largest concentration in the multipoint calibration. For example, assume that a multipoint calibration was conducted between 0 and 100 ppm and that the measured

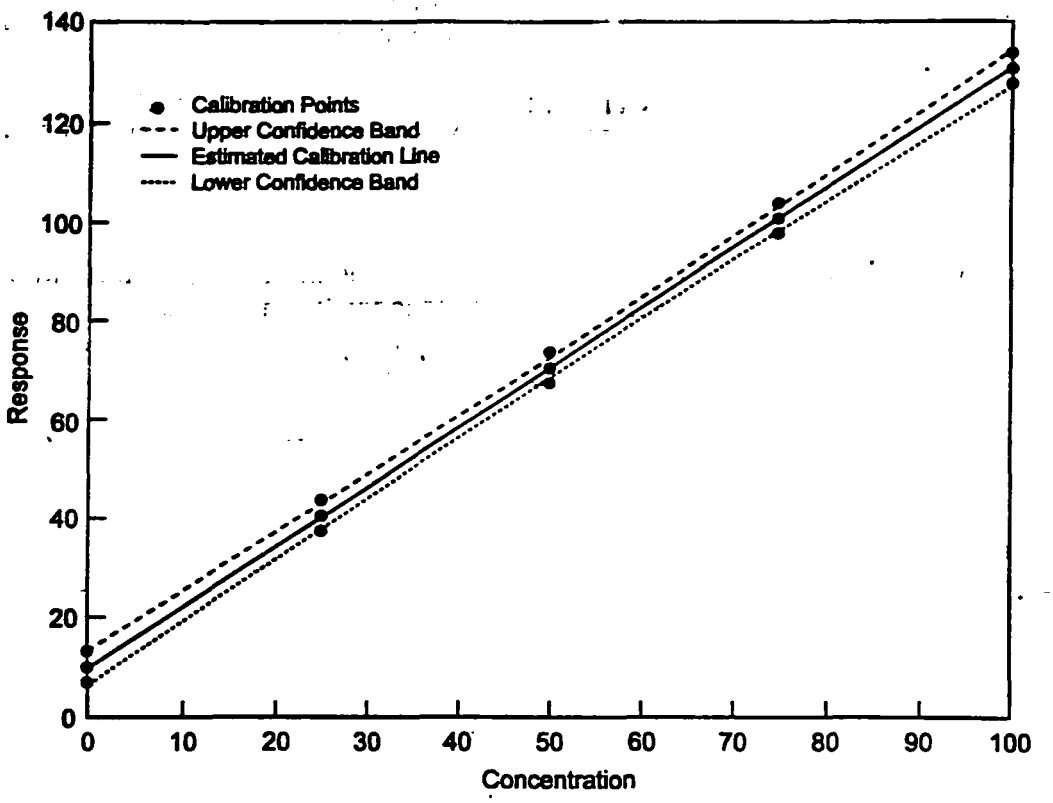

Figure 2-1. Example regression curve and confidence bands from multipoint calibration.

responses ranged between 0 and 10 volts. The calibration is well-characterized for all concentrations for which the 95-percent confidence limits are ≤±0.1 volt, which is equal to ±1 percent of 10 volts. Step 4 of the spreadsheet described in Appendix A allows the analyst to enter various concentrations and obtain the corresponding regression-predicted analyzer response and confidence limits.

In effect, the 95-percent uncertainty value is a measure of how well the multipoint calibration data fit an equation which the analyst assumes is the "true" calibration equation for the analyzer. Comparison of uncertainty values from straight-line and quadratic equations permits the analyst to select the equation that best represents the calibration data.

A multipoint calibration may fail to meet this uncertainty criterion for several possible reasons:

- inadequate analytical precision;
- inaccuracy of the reference standards or the gas dilution system; or
- excessive uncertainty in the analyzer's calibration equation due to incorrect assumptions about the form of the equation.

The effect of inadequate analytical precision can be reduced by increasing the number of replicate measurements at each calibration concentration or by increasing the number of different concentrations used in the multipoint calibration. Additionally, precision can be improved by using an averaged analyzer response, rather than an instantaneous analyzer response, for each measurement. Reference standard inaccuracy is reduced by using the most accurate reference standards that are available. An inaccurate gas dilution system can be detected by comparing measurements of the concentration of a diluted reference standard to the theoretically equal concentration of another, undiluted reference standard. It can also be detected by comparing measurements of two theoretically equal concentrations obtained by dilution of two reference standards having significantly different concentrations. An inaccurate gas dilution system must not be used for the multipoint calibration. The effect of excessive uncertainty in a straight-line calibration equation can be eliminated by using a quadratic calibration equation or by transforming the calibration data mathematically so that they may be fitted to a straight line regression equation. See Subsection 2.1.7.5 for a discussion of such mathematical transformations.

Note that possibly a more restrictive uncertainty criterion applies for the assay of the candidate standard. The magnitude of the 95-percent confidence limits for the estimated concentration of the candidate standard must be ≤±1 percent of the concentration of the reference standard (see Subsections 2.2.2 and 2.32). For example, assume that a 70-ppm candidate standard is being assayed using a 50-ppm reference standard. The 95-percent confidence limits for the candidate standard's estimated concentration must be ≤±0.5 ppm.

2.1.7.3 Zero and Span Gas Checks—

On any day after the multipoint calibration that the analyzer will be used for the assay of a candidate standard, its calibration drift must be measured. This drift is calculated relative to the analyzer response during the multipoint calibration. The purpose of the zero and span gas checks is to verify that the calibration drift has remained within acceptable limits since the multipoint calibration. The criterion that is used to assess the drift is the relative difference between the analyzer's current response and the corresponding value from the multipoint calibration. The following equation is used for this calculation:

$$\text{Relative Difference} = 100 \left[\frac{\text{Current Response} \quad \text{Calibration Response}}{\text{Calibration Response for Reference Standard}} \right] .$$

This calculation is performed in Step 6 of the spreadsheet described in Appendix A.

Note that the relative difference is always calculated relative to the calibration response for the reference standard, even when the zero gas is being measured. This calculation is performed for the zero gas measurements and for the reference standard measurements. If the reference standard was not measured during the multipoint calibration, use the regression-predicted response for a concentration equal to that of the reference standard.

If the relative differences for the zero and span gas checks are each less than or equal to 5.0 percent, the analyzer's current calibration is considered to be approximately the same as during the multipoint calibration and the assay may be conducted. The zero and span controls do not have to be adjusted following the zero and span checks because the data reduction technique used in this protocol does not depend on the absolute accuracy of the analyzer calibration equation at the time of the assay.

If the relative differences for the zero or span gas checks are greater than 5.0 percent, the analyzer is considered to be out of calibration. A new multipoint calibration may be conducted before the candidate standard is assayed or the analyzer's zero and span controls may be adjusted to return the analyzer's response to the original calibration levels. For some analyzers such as nondispersive infrared instruments, daily changes in environmental variables such as barometric pressure may shift the calibration. After any adjustment of controls, the analyst should repeat the zero and span gas checks and recalculate the relative differences to verify that the analyzer is in calibration.

The zero gas and reference standard measurements that are performed for the assay of the candidate standard may also be used for the zero and span gas checks.

Between the time of the multipoint calibration and the time of the zero and span gas checks, the analyst may adjust the analyzer's zero and span controls for assays that will not be certified according to this protocol. However, these controls must be returned to their settings at the multipoint calibration before the zero and span gas checks or assays under this protocol.

2.1.7.4 Reference Standards for Multipoint Calibrations and Zero and Span Gas Checks—
The reference standards for the multipoint calibration and for the span gas checks must be diluted or undiluted SRMs, SRM-equivalent PRMs, NTRMs, or GMISs as specified in Subsection 2.1.2. The reference standard for the span gas check need not be the same as one of those used for the multipoint calibration or for the assay of the candidate standard.

Pure gases may be diluted to prepare gas mixtures for use in multipoint calibrations, but such mixtures may not be used as the reference standards for the span gas check or for the assay of the candidate standard. Pure gases may not be diluted by more than a factor of 100.

The zero gas must meet the requirements in Subsection 2.1.9. For some analyzers such as gas chromatographs, the analyst may have reason to believe that the zero gas reading may not accurately represent the zero-intercept of the calibration equation. The analyst may substitute a low-concentration, NIST-traceable reference standard for the zero gas, providing that the concentration of this standard is less than the concentration of the candidate standard.

2.1.7.5 Uncertainty of the Calibration Curve—
The data reduction technique used in this protocol is based on the assumption that the analyzer has a well-characterized calibration curve. The accuracy of the certified concentration of a candidate compressed gas calibration standard is dependent upon this assumption. The analyst cannot assume that the analyzer's calibration curve is a straight line between the measured values for the zero gas and the reference standard. The analyst must calculate the calibration equation and the uncertainty for its predicted concentrations by statistical analysis of the measurements obtained during the multipoint calibration.

The total uncertainty of the certified concentration for a candidate standard is composed of several components. The first component is the accuracy associated with the certified concentration of the reference standard. This uncertainty is minimized by using an SRM, an SRM-equivalent PRM, a NTRM, or a GMIS as the reference standard. The second component is the precision of the measurements of the reference and candidate standards. This uncertainty is minimized by making replicate measurements of these standards. The third component is the uncertainty associated with the concentrations that are predicted from the analyzer's calibration

curve. This uncertainty concerns whether an assumed calibration equation accurately represents the "true" calibration curve.

This third component of uncertainty does not exist if the concentrations of the reference and candidate standards are equal. The assumed calibration equation and the true calibration curve will pass through the data for the reference standard regardless of whether they diverge elsewhere and the equation will be accurate for that single concentration. However, the uncertainty does exist if the concentrations of the reference and candidate standards differ. The assumed and true calibration curves may pass through different points for concentrations not equal to that of the reference standard. Analytical errors will develop because of this difference.

The measure of this uncertainty that is most directly useful to the analyst is the 95-percent uncertainty for a regression-predicted concentration given one or more measurements of the candidate standard. The uncertainty may be calculated using the spreadsheet described in Appendix A or using equivalent statistical techniques. Several points should be noted about this uncertainty value. First, its magnitude decreases as n increases where n is the number of measurements in the multipoint calibration. Second, its magnitude decreases as n′ increases, where n′ is the number of measurements of the candidate standard. Third, its magnitude increases as the mean measured analyzer response ($\bar{y}'$) for the candidate standard diverges from the overall mean measured analyzer response ($\bar{y}$) for the multipoint calibration. These points mean that it becomes easier to satisfy the uncertainty criterion as one increases the number of measurements in the multipoint calibration and in the assay of the candidate standard. Additionally, the absolute uncertainty of the regression predicted concentration is larger at the extremes of the calibrated concentration range than at the middle of the range.

For analyzers having an inherently nonlinear, but precise response, the calibration equation can be calculated using quadratic or higher-order polynomial regression analysis. Alternatively, a nonlinear equation may be linearized with a simple mathematical transformation of the multipoint calibration data. Examples of some linearizing transformations are given in Table 2-4, which is reproduced from Reference 15. The multipoint calibration data may need to undergo several different transformations before the optimum transformation is determined. Using appropriately transformed calibration data, a calibration equation can be calculated with an acceptable 95-percent uncertainty for the regression-predicted concentration. Subsequently, data obtained from the assay of the candidate standard must be similarly transformed to calculate a concentration for the candidate standard.

2.1.8 Uncertainty of the Estimated Concentration of the Candidate Standard

Uncertainty in the concentration estimated for a candidate standard is due to many different sources, including uncertainty in the reference standards, uncertainty in the analyzer multipoint calibration, uncertainty in the zero/span correction factors, and measurement imprecision. Some of these sources can be assessed using standard statistical techniques, but others cannot be assessed with the limited data that are produced when implementing this protocol.

For those cases where the candidate standard is assayed at the same time as the multipoint calibration, the candidate standard's concentration is determined directly from the calibration curve. The total uncertainty of the concentration is calculated by using the spreadsheets described in

TABLE 2-4. SOME LINEARIZING TRANSFORMATIONS FOR MULTIPOINT CALIBRATION DATA

If the relationship is of the form:	STEP ONE: Plot the transformed calibration data		STEP TWO: Fit the straight line	STEP THREE: Convert straight line constants (b_0 and b_1) to original constants:	
	$Y_T =$	$X_T =$	$Y_T \quad b_0 + b_1 X_T$	$b_0 =$	$b_1 =$
$Y = a + \frac{b}{X}$	Y	$\frac{1}{X}$	Use the normal procedures for calculating the regression line using the transformed calibration data. Calculate the 95-percent uncertainties for the predicted transformed concentrations and compare them to the uncertainty criterion.	a	b
$Y \quad \frac{1}{a + bX'}$, or $\frac{1}{Y} - a + bX$	$\frac{1}{Y}$	X		a	b
$Y = \frac{X}{a + bX}$	$\frac{X}{Y}$	X		a	b
$Y \quad ab^x$	$\log Y$	X		$\log a$	$\log b$
$Y = ae^{bx}$	$\log Y$	X		$\log a$	$b \log e$
aX^b	$\log Y$	$\log X$		$\log a$	b
$Y = a + bX^n$, where n is known	Y	X^n		a	b

Source: Reference 15.

Appendices A and C or equivalent statistical techniques. It combines the uncertainty of the assay with the uncertainty of the reference standard using the following equation:

$$\text{Uncertainty}_{TOTAL} = \sqrt{(\text{Uncertainty}_{ASSAY})^2 + (\text{Uncertainty}_{STANDARD})^2} \ .$$

For those cases where the candidate standard is assayed on a date following the multipoint calibration, the spreadsheet includes the uncertainty associated with the zero gas and reference standard measurements in the calculation of total uncertainty.

If an interference-correction equation has been used to obtain a corrected concentration for the candidate standard, the 95-percent uncertainty for the corrected concentration must be included in the assessment of the total analytical uncertainty of the candidate standard's concentration using the following equation:

$$\text{Uncertainty}_{TOTAL} = \sqrt{(\text{Uncertainty}_{ASSAY})^2 + (\text{Uncertainty}_{CORRECTION})^2 + (\text{Uncertainty}_{STANDARD})^2} \ .$$

The analyst may report the total analytical uncertainty of the candidate standard's certified concentration on the certification documentation or may report this estimate as a percentage that is relative to the certified concentration using the following equation:

$$\text{Uncertainty}_{RELATIVE} = 100 \left[\text{Uncertainty}_{TOTAL} \ / \ \text{Certified Concentration} \right] \ .$$

2.1.9 Zero Gas

Zero gas used for zero gas checks or for dilution of any candidate or reference standard should be clean, dry, zero-grade air or nitrogen containing no detectable concentration of the pollutant of interest. It should match the balance gas in the candidate standard and the reference standard, unless it has been demonstrated that the analyzer is insensitive to differences in the balance gas composition. The zero gas also should contain no contaminant that causes a detectable response on the analyzer or that suppresses or enhances the analyzer's response. The oxygen content of zero air should be approximately that of ambient air, unless it has been demonstrated that varying the oxygen content does not suppress or enhance the analyzer's response. The water vapor concentration in the zero gas should be less than 5 ppm.

The analyst may substitute a low-concentration, NIST-traceable reference standard for the zero gas in zero gas checks and assays if there is reason to believe that the zero gas reading may not accurately represent the zero-intercept of the calibration equation.

2.1.10 Accuracy Assessment of Commercially Available Standards

Periodically, the U.S. EPA will assess the accuracy of compressed gas calibration standards that have been assayed and certified according to this protocol. The accuracy of representative standards will be assessed by EPA audits. The audit results, identifying the specialty gas producers or other analytical laboratories that assayed and certified the standards, will be published as public information. A summary of EPA's audit results from 1992 to the present is available as a WordPerfect 6.1 file at EPA's Ambient Monitoring Technology Information Center (Internet Address:

http://www.epa.gov/ttn). This document can be found in the Directory of TTNWeb Sites/ AMTIC/Publications/ORD-NERL Documents.

2.2 PROCEDURE G1: ASSAY AND CERTIFICATION OF A COMPRESSED GAS CALIBRATION STANDARD WITHOUT DILUTION

2.2.1 Applicability

This procedure may be used to assay the concentration of a candidate compressed gas calibration standard, based on the concentration of a compressed gas reference standard of the same gas mixture. This procedure allows a specialty gas producer, a standard user, or other analytical laboratory to certify that the assayed concentration for the candidate standard is traceable to the reference standard. The procedure employs a pollutant gas analyzer to compare the candidate and reference standards' concentrations by direct measurement without dilution of either gas.

This procedure may be used for the assay of more than one candidate standard during the same assay session. Criteria that apply to the assay of one candidate standard apply to the assay of multiple candidate standards.

2.2.2 Limitations

The concentration of the candidate standard may be greater than or lesser than the concentration of the reference standard. However, both concentrations must lie within the well-characterized region of the multipoint calibration (see Subsection 2.1.7.2). Additionally, the magnitude of the 95-percent confidence limits for the estimated concentration of the candidate standard must $\leq \pm 1$ percent of the reference standard concentration. This criterion may be more restrictive than the corresponding criterion for the multipoint calibration, but it allows the analyst greater flexibility in the selection of a reference standard for the assay of a particular candidate standard. For example, assume that a 70-ppm candidate standard is being assayed using a 50-ppm reference standard and that the analyzer's calibration was found to be well-characterized between 20 and 80 ppm. The 95-percent confidence limits for the candidate standard's estimated concentration must be less than or equal to ±0.5 ppm.

The balance gas must be the same in both the candidate standard and the reference standard, unless it has been demonstrated that the analyzer's response is insensitive to differences in the balance gas composition.

2.2.3 Assay Apparatus

Figure 2-2 illustrates one possible design of apparatus for the assay of compressed gas calibration standards without dilution. This apparatus is designed to allow the convenient routing of the gas mixtures to the pollutant gas analyzer. The gas mixture to be measured is selected by rotation of two three-way valves (i.e., V1 and V2). Pressure regulators and gas flow controllers (i.e., C1 and C2) control the flow rates from the individual cylinders. The gas flow controllers may be needle values, capillary tubes, thermal mass flow controllers, or other flow control devices. The gas mixtures are routed to the analyzer through a union tee tube fitting. Gas in excess of the analyzer's demand is vented, which helps to ensure that the gas entering the analyzer is at near-ambient pressure. Normally, the excess gas is vented to the atmosphere without any obstructions in the tubing. However, the excess gas can be routed through an uncalibrated rotameter by rotation of a three-way valve (i.e., V3). The rotameter is used to demonstrate that the total gas flow rate exceeds the sample flow rate of the analyzer and that no room air is being drawn in through the vent line.

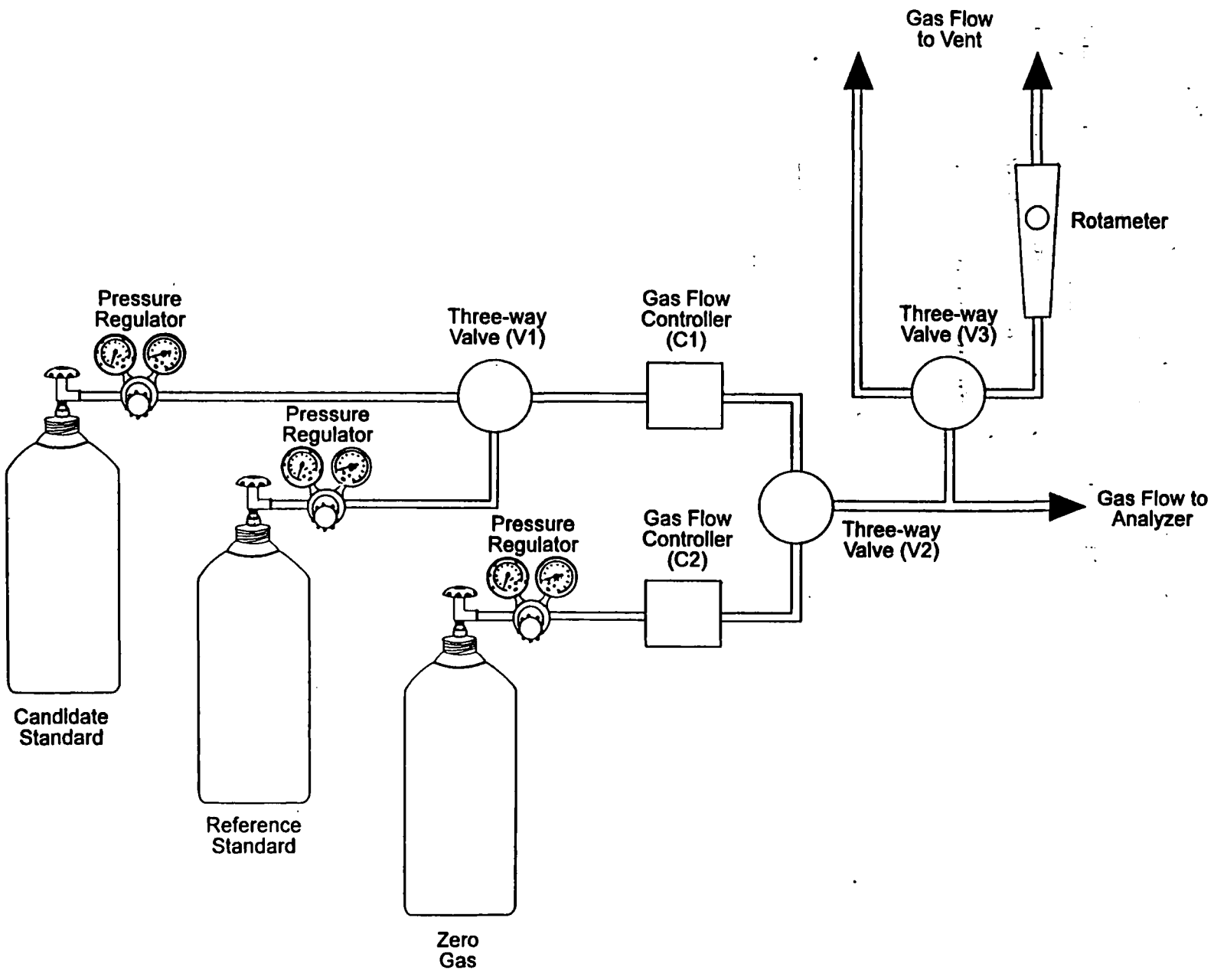

Figure 2-2. One possible design of the apparatus for the assay of compressed gas calibration standards without dilution (Procedure G1)

The apparatus may be modified in several ways that will not diminish its performance. The two three-way valves could be replaced by solenoid valves or by a single four-way valve with three input ports and one output port. Alternatively, a single length of tubing with a gas flow controller could be connected manually to individual cylinders' pressure regulators in succession. See also Subsection 2.1.3.

2.2.4 Pollutant Gas Analyzer

The pollutant gas analyzer must have a well-characterized calibration curve and must be capable of measuring directly the concentration of both the candidate and the reference standards without dilution. See Subsection 2.1.7.1. It must have good resolution, good precision, a stable response, and low output signal noise. In addition, the analyzer should have good specificity for the pollutant of interest so that it has no detectable response to any other component or contaminant that may be contained in either the candidate or reference standards. If any component in a multiple-component standard interferes with the assay of any other component, the analyst must conduct an interference study to determine an interference correction equation. If the candidate and reference standards contain dissimilar balance gases (e.g., air versus nitrogen or different proportions of oxygen in the balance air), it must have been demonstrated that the analyzer's response is not sensitive to differences in the balance gas composition. This demonstration can be accomplished by showing that no difference exists in the analyzer's response when measuring a compressed gas calibration standard that has been diluted with identical flow rates of different balance gases.

The analyzer should be connected to a high-precision data acquisition system (e.g., a strip chart recorder), which must produce an electronic or paper record of the analyzer's response during the assay. A high-precision digital panel meter, a digital voltmeter, a data logger or some other data acquisition system with four-digit resolution can be used to obtain numerical values of the analyzer's response. More precise values will be obtained if this system has a data-averaging capability. The assay record must be maintained for 3 years after the standard's certification date.

If the analyzer has not been in continuous operation, turn it on and allow it to stabilize (e.g., for at least 12 hours) before beginning the measurements.

2.2.5 Analyzer Calibration

2.2.5.1 Multipoint Calibration—

See Subsections 2.1.7.2 and 2.1.7.4.

2.2.5.2 Analyzer Range—

The range of the analyzer must include the concentrations of the zero gas, the candidate standard and the reference standard. The concentrations of the candidate and reference standards must fall within the well-characterized region of the analyzer's calibration curve. In general, the analyst should use a range that will produce the largest on-scale analyzer response.

2.2.5.3 Linearity—

The data reduction technique used in this procedure requires that the analyzer have a well-characterized, but not necessarily linear, calibration curve (see Subsection 2.1.7.5). High-concentration-range analyzers of the type that are required for this procedure may not be inherently linear, but in such cases they usually have a predictable, non-linear calibration curve that can be described by a polynomial equation or can be mathematically transformed to produce a straight-line calibration curve that is suitable for use in this procedure. Any such polynomial equation or mathematical transformation should be verified during the multipoint calibration. Caution should be

exercised in using a transformed calibration curve because zero or span control adjustments to the analyzer may produce unexpected effects in the transformed calibration curve.

2.2.5.4 Zero and Span Gas Checks—

See Subsections 2.1.7.3 and 2.1.7.4. Prior to carrying out the assay of the candidate standard, use zero and span gases to check for calibration drift in the analyzer since the multipoint calibration. Zero gas and span gas checks must be performed on any day after the multipoint calibration that candidate standards are assayed. If multiple assays are being performed on the same analyzer range, the analyst needs to perform only a single set of zero gas and span gas checks for this range. However, another set must be performed if the range is changed.

The gas mixtures to be used during the zero and span gas checks need not be the same as any of the reference standards used for the assay of the candidate standard or for the multipoint calibration. The reference standard for the span gas check must be traceable to a NIST SRM, a SRM-equivalent PRM, or an NTRM. Information concerning this standard (e.g., cylinder identification number, certified concentration) must be recorded in the laboratory's records.

A source of clean, dry zero gas is recommended, but not required. The analyst may substitute a low-concentration, NIST-traceable reference standard for the zero gas if there is reason to believe that the zero gas reading may not accurately represent the zero-intercept of the calibration equation.

Make three or more discrete measurements of the zero gas and three or more discrete measurements of the reference standard. "Discrete" means that the analyst must change the gas mixture being sampled by the analyzer between measurements. For example, the analyst might alternate between measurements of the reference standard and measurements of the zero gas. Record these measurements in the laboratory's records.

Next, verify that the analyzer's precision is acceptable. Calculate the mean and standard deviation of the analyzer's responses to the zero gas. Repeat the calculations for the reference standard measurements. These calculations are performed in Step 6 of the spreadsheet described in Appendix A. Record these calculations in the laboratory's records. The standard error of the mean for each set of measurements must be less than or equal to 1.0 percent of the mean response to the reference standard. That is,

$$\frac{s}{\sqrt{n}} \leq \frac{\overline{R_{RS}}}{100}$$

where

s = standard deviation of the analyzer's response;
n = the number of independent measurements of the gas mixture; and
$\overline{R_{RS}}$ = the mean analyzer response to the reference standard.

The value of the standard error of the mean can be made smaller by increasing the number of measurements. This calculation will enable the analyst to determine how many replicate measurements are needed during the assay of the candidate standard to obtain acceptable precision. The analyst may wish to use a data logger or data acquisition system with averaging capability to obtain more precise measurements. If the value of the standard error of the mean is not acceptable, then the analyzer must be repaired or another analyzer must be used for the assay.

Next, verify that excessive calibration drift has not occurred since the multipoint calibration. For the zero gas measurements, calculate the relative difference (in percent) between the current mean analyzer response during the zero gas check and the corresponding response that is predicted from the multipoint calibration regression equation. That is,

$$\text{Relative Difference} \quad 100 \left[\frac{\text{Current Response} - \text{Calibration Response}}{\text{Calibration Response for Reference Standard}} \right] .$$

This calculation is performed in Step 6 of the spreadsheet described in Appendix A.

Note that the relative difference is always calculated relative to the calibration response for the reference standard, even when the zero gas is being measured. Repeat this calculation for the reference standard measurements. Record these calculations in the laboratory's records. If the reference standard was not measured during the multipoint calibration, use the regression-predicted response for a concentration equal to that of the reference standard.

Then, if the relative differences for the zero and span gas checks are less than or equal to 5.0 percent, the analyzer is considered to be sufficiently in calibration. The zero and span controls need not be adjusted and the assay may be conducted. The data reduction technique does not require the absolute accuracy of the analyzer calibration. Some minor calibration drift is acceptable because the effect of any drift will be corrected during the reduction of the assay data.

However, if the relative difference for either the zero or the span gas check is greater than 5.0 percent, then the analyzer is considered to be out of calibration. A new multipoint calibration may be conducted before the candidate standard is assayed or the analyzer's zero and span controls may be adjusted to return the analyzer's response to the original calibration levels. For some analyzers such as nondispersive infrared instruments, daily changes in environmental variables such as barometric pressure may shift the calibration. After any adjustment of controls, the analyst should repeat the zero and span gas checks and recalculate the relative differences to verify that the analyzer is sufficiently in calibration. The analyzer will be considered to be out of calibration if the relative differences remain greater than 5.0 percent.

The zero gas and reference standard measurements that are performed for the assay of the candidate standard may also be used for the zero and span gas checks.

2.2.6 Assay Gases

2.2.6.1 Candidate Standard—

See Subsections 2.1.6 and 2.2.2.

2.2.6.2 Reference Standard—

See Subsections 2.1.2 and 2.2.2. The reference standard used for the assay of the candidate standard must be a NIST SRM, an SRM-equivalent PRM, an NTRM or a GMIS. This standard need not be the same as any of the reference standards used for the span gas check or for the multipoint calibration. Information concerning the reference standard (e.g., cylinder identification number, certified concentration, etc.) must be recorded in the laboratory's records.

If the multipoint calibration data have been fitted to a linear (i.e., straight-line) regression model, then only a single reference standard need be measured during the assay of the candidate standard. If these data have been fitted to a quadratic or higher-order regression model, then at least two reference standards must be measured. One reference standard is adequate to determine the slope of a linear equation, but additional reference standards are needed to determine the

curvature of quadratic and higher-order polynomial equations. The concentrations of the additional reference standards should be located at the maximum difference between the polynomial curve and the corresponding straight line between the zero gas and the highest-concentration reference standard.

2.2.6.3 Zero Gas—

See Subsection 2.1.9. A source of clean, dry zero gas is recommended, but not required. The analyst may substitute a low-concentration, NIST-traceable reference standard for the zero gas during zero gas checks and assays if there is reason to believe that the zero gas reading may not accurately represent the zero-intercept of the calibration equation. Information concerning the zero gas should be recorded in the laboratory's records.

2.2.7 Assay Procedure

1. Verify that the assay apparatus is properly configured, as described in Subsection 2.2.3 and shown in Figure 2-1. Inspect the analyzer to verify that it appears to be operating normally and that all controls are set to their expected values. Record these control values in the laboratory's records.

2. Verify that a multipoint calibration of the analyzer has been performed within 1 month prior to the assay date. (See Subsections 2.1.7.2, 2.1.7.5 and 2.2.4). Additionally, verify that the zero and span gas checks indicate that the analyzer is in calibration (see Subsection 2.2.5.4). Finally, verify that the concentrations of the candidate and reference standards fall within the well-characterized region of the analyzer's calibration curve (see Subsection 2.2.2).

3. Measure and adjust the flow rates of the gas mixtures (i.e., reference standard(s), candidate standard, and zero gas) to approximately the same value that will provide enough flow for the analyzer and sufficient excess to assure that no ambient air will be drawn into the vent line.

4. In succession, measure the zero gas, the reference standard(s), and the candidate standard(s) using the analyzer. Use valves V1 and V2 to select each of the gas mixtures for measurement. For each measurement, allow ample time for the analyzer to achieve a stable response. If the response for each measurement is not stable, the precision of the measurements will decline and the candidate standard may not be certifiable under this protocol. Record the analyzer response for each measurement in the laboratory's records, using the same response units (e.g., volts, millivolts, percent of scale, etc.) as was used for the multipoint calibration. At this point, do not convert these data into concentration values using the calibration equation. Do not perform any necessary mathematical transformation of these data. These steps will be done later. Do not make any zero control, span control, or other adjustments to the analyzer during these measurements.

   The analyst may assay multiple candidate standards during the same assay session. For example, a single set of measurements may involve a zero gas, a reference standard and three candidate standards. Criteria that apply to the assay of one candidate standard apply to the assay of multiple candidate standards. The analyst should be aware that the effect of any short-term calibration drift will be greater when multiple candidate standards are assayed. This greater effect is due to the longer period of time between reference standard measurements. Unacceptable uncertainties of the estimated concentrations for the candidate standards may occur as a result of the longer assay session.

5. Conduct at least two additional sets of measurements, as described in step 4 above. However, for these subsequent sets of measurements, change the order of the three measurements (e.g., measure reference standard, zero gas, and candidate standard for the second set and measure zero gas, candidate standard, and reference standard for the third set). Changing the order that the gas mixtures are measured helps the analyst to discover any effect of that one measurement has on subsequent measurements. The number of sets of measurements will have been determined during analysis of the multipoint calibration data such that the 95-percent uncertainty for the regression-predicted concentration of the candidate standard is ≤1 percent of the concentration of the reference standard.

6. If any one or more of the measurements of a set of measurements is invalid or abnormal for any reason, discard all three measurements and repeat the measurements. Such measurements may be discarded if the analyst can demonstrate that the experimental conditions were inappropriate during these measurements. Data cannot be discarded just because they appear to be outliers but may be discarded if they satisfy statistical criteria for testing outliers.[16] The analyst must record any discarded data and a brief explanation as to why these data were discarded in the laboratory's records.

7. The spreadsheet described in Appendix A or equivalent statistical techniques must be used to calculate an estimated concentration and a 95-percent uncertainty for the candidate standard based on data from the assay measurements and from the multipoint calibration. The use of both sets of data in the statistical analysis produces an estimated concentration with smaller uncertainty while correcting for any minor calibration drift which may have occurred since the multipoint calibration. Record the estimated concentration and the 95-percent uncertainty in the laboratory's records.

   The spreadsheet also calculates the percentage of the uncertainty that is due to the multipoint calibration. This percentage is needed for the total uncertainty calculations when two or more assays fall under the same multipoint calibration. Record this value in the laboratory's records.

   The analyst should investigate any of the measurements that appear to be outliers. Such data may be discarded if the analyst can demonstrate that the experimental conditions were inappropriate during these measurements. Data cannot be discarded just because they appear to be outliers, but may be discarded if they satisfy statistical criteria for testing outliers. The analyst must record any discarded data and a brief summary of the investigation in the laboratory's records.

8. If the multipoint calibration data and the assay data underwent any mathematical transformations before their statistical analysis, perform the reverse transformations for the estimated concentration and the 95-percent uncertainty. Record the transformed values in the laboratory's records.

2.2.8 Stability Test for Newly Prepared Candidate Standards

Newly prepared candidate standards that contain reactive gas mixtures must be assayed on at least two dates that are separated by at least 7 days (see Subsections 2.1.6.1 and 2.1.6.2). The spreadsheet described in Appendix C or equivalent statistical techniques must be used to evaluate the stability of the candidate standard and to calculate the overall estimated concentration and the total uncertainty for the candidate standard.

The stability is evaluated by comparing the 95-percent confidence limits (i.e., estimated concentration ±95-percent uncertainty) for the candidate standard from the two or more assays. If the confidence limits overlap, the candidate standard can be considered to be stable and may be certified. In the spreadsheet, all cells in the comparisons table will be "true." If the confidence limits do not overlap, the candidate standard may be unstable or there may be analytical problems associated with the assays or the reference standards. One or more cells in the comparisons table will be "false." The analyst must either disqualify the candidate standard or investigate why the confidence limits do not overlap. The analyst may conduct additional assays until stability is achieved and add the additional data to the spreadsheet. Data from a nonoverlapping assay may be discarded and the remaining data used to determine the overall estimated concentration and the total uncertainty provided the confidence limits overlap. Record these values and any discarded data in the laboratory's records.

2.2.9 Certification Documentation

See Subsections 2.1.4 and 2.1.5.

2.2.10 Recertification Requirements

See Subsections 2.1.6.3 and 2.1.6.4.

2.3 PROCEDURE G2: ASSAY AND CERTIFICATION OF A COMPRESSED GAS CALIBRATION STANDARD USING DILUTION

2.3.1 Applicability

This procedure may be used to assay the concentration of a diluted candidate compressed gas calibration standard, based on the concentration of a diluted compressed gas reference standard of the same gas mixture. This procedure allows a specialty gas producer, a standard user, or other analytical laboratory to certify that the assayed concentration for the candidate standard is traceable to the reference standard. The procedure employs a low-concentration-range (i.e., ambient air quality level) pollutant gas analyzer to compare quantitatively diluted gas samples of both the candidate and reference standards.

Dilution of the candidate and reference standards with zero gas allows greater flexibility in the range of concentrations of both the candidate and reference standards that can be assayed. Additionally, dilution allows the use of a low-concentration-range analyzer, which is more likely to have an inherently linear response than a high-concentration-range analyzer. However, the dilution technique introduces additional error into the assay which would not be present if the standards were assayed without dilution. This additional error is measured by an accuracy check of the assay apparatus which is performed as part of the multipoint calibration.

This procedure may be used for the assay of multiple candidate standards at the same time. Criteria that apply to the assay of one candidate standard apply to the assay of multiple candidate standards.

2.3.2 Limitations

1. The concentration of the diluted candidate standard may be greater than or lesser than the concentration of the diluted reference standard. However, both concentrations must lie within the well-characterized region of the analyzer's multipoint calibration (see Subsection 2.1.7.2).

Additionally, the magnitude of the 95-percent confidence limits for the estimated concentration of the candidate standard must be ≤±1 percent of the reference standard concentration. This criterion may be more restrictive than the corresponding criterion for the multipoint calibration, but it allows the analyst greater flexibility in the selection of a reference standard for the assay of a particular candidate standard. For example, assume that a 70-ppm candidate standard is being assayed using a 50-ppm reference standard and that the analyzer's calibration was found to be well characterized between 20 and 80 ppm. The 95-percent confidence limits for the candidate standard's estimated concentration must be ≤±0.5 ppm.

2. An accurate system for flow measurement and gas dilution is required.

3. The balance gas in both the candidate and reference standards must be identical, unless either a high dilution flow rate ratio (i.e., at least 50 parts zero gas to 1 part standard) is used for the assay or it has been demonstrated that the analyzer is insensitive to differences in the balance gas.

2.3.3 Assay Apparatus

The components of the assay apparatus can be assembled in several different configurations without diminishing performance. Two possible designs of the assay apparatus are illustrated in Figures 2-3 and 2-4. The former figure shows a configuration in which discrete components (i.e., three-way valves, gas flow controllers, and a mixing chamber) are used to dilute the reference and candidate standards. The latter figure shows a configuration in which a commercially available gas dilution system is used to dilute the standards. Both designs share the important characteristic that the candidate standard is diluted by the same components that dilute the reference standard.

In Figure 2-3, either zero gas or a diluted standard can be routed to the analyzer by rotation of three three-way values (i.e., V1, V2, and V3). One gas flow controller (i.e., C1) regulates the flow rates of the reference and candidate standards. These flow rates can be measured by a single flowmeter connected to an outlet port on valve V2 or by a flowmeter built into C1. Another gas flow controller (i.e., C2) regulates the flow rate of the zero gas. This flow rate can be measured by a flowmeter connected to an outlet port on valve V3 or by a flowmeter built into C2. The gas flow controllers may be needle valves, capillary tubes, thermal mass flow controllers, or other suitable devices (see Subsection 2.3.7). If different flow rates are used for the reference and candidate standards during the assay (see Subsection 2.3.6), separate gas flow controllers may be used for the two standards. However, the same flowmeter must be used to measure the two flow rates to minimize error in the measurement (see Subsection 2.3.7). Flow rates should be controlled and measured with a relative uncertainty of 1 percent or less. For large dilutions of the standards, the reference and candidate standard flow rates may be quite small. Therefore, the internal volume of the tubing and components should be kept small to minimize the flushing time when valve V1 is rotated.

The mixing chamber combines the two gas streams and should be designed to produce turbulent flow to ensure thorough mixing of the gas streams. The diluted gas mixtures are routed to the analyzer through a union tee tube fitting, which vents excess gas flow. Normally, the excess gas is vented to the atmosphere without any obstructions in the tubing and the gas entering the analyzer is at near-atmospheric pressure. However, the excess gas can be routed through an uncalibrated rotameter by rotation of a three-way valve (i.e., V4). The rotameter is used to demonstrate that the total gas flow rate exceeds the sample flow rate of the analyzer and that no room air is being drawn in through the vent line.

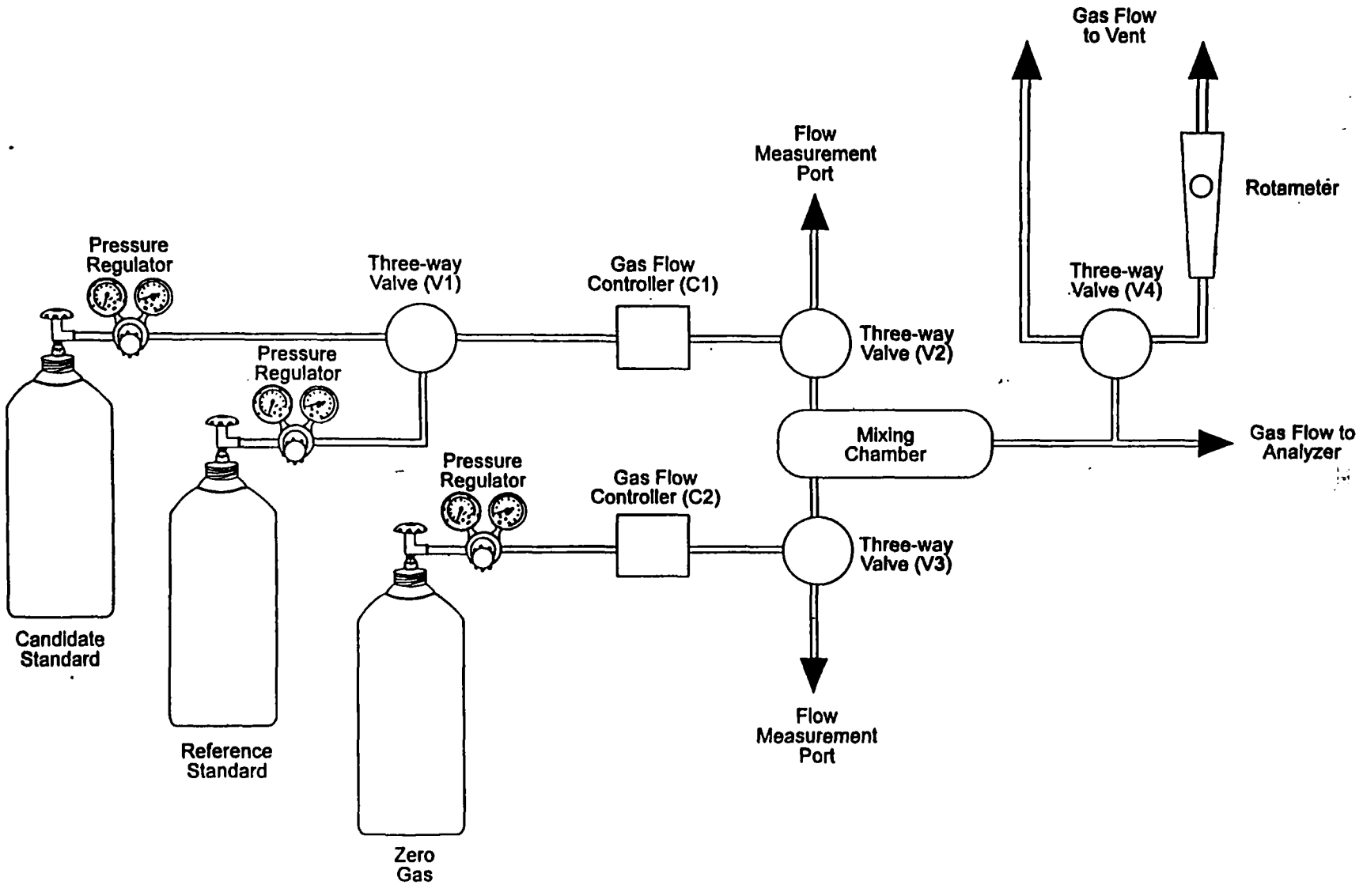

Figure 2-3. One possible design of the apparatus using flow controllers for assay of compressed gas calibration standards with dilution (Procedure G2)

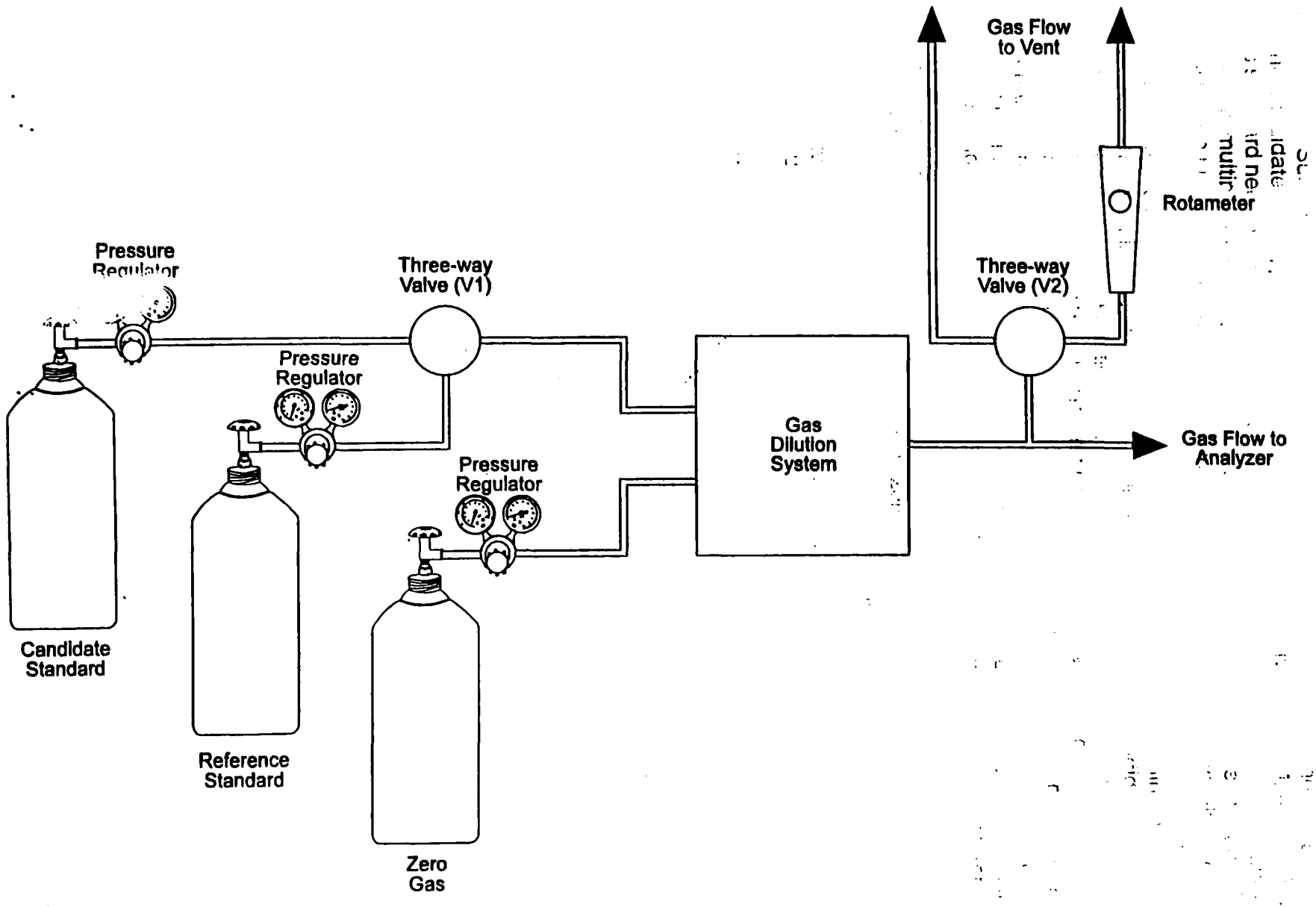

Figure 2-4. One possible design of the apparatus using a gas dilution system for assay of compressed gas calibration standards with dilution (Procedure G2)

The apparatus in Figure 2-3 may be modified in several ways that will not diminish its performance. For example, the three-way valves could be replaced by solenoid valves. Alternatively, valve V1 could be replaced by a single length of tubing that is connected manually to the two standards' pressure regulators in succession (see also Subsection 2.1.3).

In Figure 2-4, the reference and candidate standards are diluted with a gas dilution system. This gas dilution system may use capillary tubes, positive-displacement pumps, thermal mass flow controllers, or other suitable devices to dilute the standards. If a gas dilution system is used, it must have a specified accuracy of not greater than 1.0 percent of the undiluted reference standard concentration. The analyst must check the accuracy of the gas dilution system during the multipoint calibration (see Subsections 2.1.7.2 and 2.3.5.1).

2.3.4 Pollutant Gas Analyzer

The pollutant gas analyzer must have a well-characterized calibration curve and must have a range that is capable of measuring the diluted concentration of both the candidate and the reference standards (see Subsection 2.1.7.1). It must have good resolution, good precision, a stable response, and low output signal noise. In addition, the analyzer should have good specificity for the pollutant of interest so that it has no detectable response to any other component or contaminant that may be contained in either the candidate or reference standards. If any component in a multiple-component standard interferes with the assay of any other component, the analyst must conduct an interference study to determine an interference correction equation. A suitable analyzer with acceptable performance specifications may be selected from the list of EPA-designated reference and equivalent method analyzers.[17] If the candidate and reference standards contain dissimilar balance gases (e.g., air versus nitrogen or different proportions of oxygen in the balance air), either a high dilution flow-rate ratio (i.e., at least 50 parts zero gas to 1 part standard) should be used or it must have been demonstrated that the analyzer's response is not sensitive to differences in the balance gas composition. This demonstration may be accomplished by showing that no difference exists in an analyzer's response when measuring a compressed gas calibration standard that has been diluted with identical flow rates of different balance gases.

The analyzer should be connected to a high-precision data acquisition system (e.g., a strip chart recorder) which must produce an electronic or paper record of the analyzer's response during the assay. A high-precision digital panel meter, a digital voltmeter, a data logger or some other data acquisition system with four-digit resolution can be used to obtain numerical values of the analyzer's response. More precise values will be obtained if this system has a data-averaging capability. The assay record must be maintained for 3 years after the standard's certification date.

If the analyzer has not been in continuous operation, turn it on and allow it to stabilize (e.g., for at least 12 hours) before beginning any measurements.

2.3.5. Analyzer Calibration

2.3.5.1 Multipoint Calibration—

See Subsections 2.1.7.2 and 2.1.7.4. Following completion of the multipoint calibration, the accuracy of the assay apparatus must be checked to verify that the error associated with the dilution is not excessive. This accuracy check involves the measurement of an undiluted or diluted check standard. The check standard must be an SRM, an SRM-equivalent PRM, or an NTRM, or a GMIS as specified in Subsection 2.1.2. It must have a certified concentration that is different from that of the reference standard used in the multipoint calibration. Information concerning this standard (e.g., cylinder identification number, certified concentration) must be recorded in the laboratory's records.

If an undiluted check standard is used, its concentration must fall in the well-characterized region of the calibration curve. If a diluted check standard is used, the diluted concentration must fall in the well-characterized region.

Make three or more discrete measurements of the undiluted or diluted check standard. "Discrete" means that the analyst must change the gas mixture being sampled by the analyzer between measurements. For example, the analyst might alternate between measurements of the check standard and the zero gas. Record these measurements in the laboratory's records.

Next the analyst must verify that the dilution error is not excessive. For the check standard measurements, calculate the relative difference (in percent) between the mean analyzer response and the corresponding response that is predicted from the multipoint calibration regression equation and the undiluted or diluted check standard concentration. That is,

$$\text{Relative Difference} \quad 100 \left[\frac{\text{Mean Analyzer Response} \quad \text{Predicted Response}}{\text{Predicted Response}} \right] .$$

If the relative difference is greater than 1.0 percent, the dilution error is considered to be excessive. The analyst must investigate why the relative difference is excessive. The problem may be due to errors in the reference standard and check standard concentrations, errors in assay apparatus or to some other source. Assays may not be conducted until the relative difference for a subsequent accuracy check is less than or equal to 1.0 percent.

2.3.5.2 Analyzer Range—

The range of the analyzer must include the concentrations of the zero gas and of the diluted candidate and reference standards (see Subsection 2.3.6). The concentrations of the diluted reference and candidate standards must fall within the well-characterized region of the analyzer's calibration curve. Because the selection of the dilution ratio or ratios to be used in the assay provides great flexibility in the choice of concentrations to be measured by the analyzer, the analyzer range should be selected based on optimum accuracy, stability, and linearity.

2.3.5.3 Linearity—

The data reduction technique used in this procedure requires that the analyzer have a well-characterized, but not necessarily linear, calibration curve (see Subsection 2.1.7.5). Many lower-concentration analyzers of the type that may be used for this procedure have straight-line calibration curves. If not, they usually have a predictable nonlinear calibration curve that can be described by a polynomial equation or can be mathematically transformed to produce a straight-line calibration curve suitable for use in this procedure. Any such polynomial equation or mathematical transformation should be verified during the multipoint calibration. Caution should be exercised in using a transformed calibration curve because zero or span control adjustments to the analyzer may produce unexpected effects in the transformed calibration curve.

2.3.5.4 Zero and Span Gas Checks—

See Subsections 2.1.7.3 and 2.1.7.4. Prior to carrying out the assay of the candidate standard, use zero and span gases to check for calibration drift in the analyzer since the multipoint calibration. Zero gas and span gas checks must be performed on any day after the multipoint calibration that candidate standards are assayed. If multiple assays are being performed on the same analyzer range, the analyst needs to perform only a single set of zero gas and span gas checks. However, another set must be performed if the range is changed.

The gas mixtures to be used during the zero and span gas checks need not be the same as ar the reference standards used for the assay of the diluted candidate standard or for the

multipoint calibration. The reference standard for the span gas check must be traceable to a NIST SRM, an SRM-equivalent PRM, or an NTRM. Information concerning this standard (e.g., cylinder identification number, certified concentration) must be recorded in the laboratory's records.

Make three or more discrete measurements of the zero gas and three or more independent measurements of the diluted reference standard. Record these measurements in the laboratory's records.

Next, the analyst must verify that the analyzer's precision is acceptable. Calculate the mean and standard deviation of the analyzer's response to the zero gas. Repeat these calculations for the diluted reference standard measurements. These calculations are performed in Step 6 of the spreadsheet described in Appendix A. Record these calculations in the laboratory's records. The standard error of the mean for each set of measurements must be less than or equal to 1.0 percent of the mean response to the diluted reference standard. That is,

$$\frac{s}{\sqrt{n}} \leq \frac{\bar{R}_{DRS}}{100}$$

where

s	=	standard deviation of the analyzer's response;
n	=	the number of independent measurements of the gas mixture; and
$\bar{R}_{DRS}$	=	the mean analyzer response to the diluted reference standard.

The value of the standard error of the mean can be made smaller by increasing the number of measurements. This calculation will enable the analyst to determine how many replicate measurements are needed during the assay of the diluted candidate standard to obtain acceptable precision. The analyst may wish to use a data logger or data acquisition system with data averaging capability to obtain more precise measurements. If the value of the standard error of the mean is not acceptable, then the analyzer must be repaired or another analyzer must be used for the assay.

Next the analyst must verify that excessive calibration drift has not occurred since the multipoint calibration. For the zero gas measurements, calculate the relative difference (in percent) between the mean analyzer response during the zero gas check and the corresponding response that is predicted from the multipoint calibration regression equation. That is,

$$\text{Relative Difference} \quad 100 \left[\frac{\text{Current Response} \quad \text{Calibration Response}}{\text{Calibration Response for Diluted Reference Standard}} \right]$$

This calculation is performed in Step 6 of the spreadsheet described in Appendix A.

Note that the relative difference is always calculated relative to the calibration response for the diluted reference standard, even when zero gas is being measured. Repeat this calculation for the diluted reference standard measurements. Record these calculations in the laboratory's records. If the diluted reference standard was not measured during the multipoint calibration, use the regression-predicted response for a concentration equal to that of the diluted reference standard.

Then, if the relative differences for the zero and spa ecks are less than or equal to 5.0 percent, the analyzer is considered to be in calibration. Th c and span controls need not be adjusted and the assay may be conducted. The data reduc echnique used in this procedure does not require the absolute accuracy of the analyzer's ca on. Some minor calibration drift is acceptable because the drift will be corrected for during th uction of the assay data.

However, if the relative difference for either the zero or the span gas checks is greater than 5.0 percent, then the analyzer is considered to be out of calibration. A new multipoint calibration may be conducted before the candidate standard is assayed or the analyzer's zero and span controls may be adjusted to return the analyzer's response to the original calibration levels. For some analyzers such as nondispersive infrared instruments, daily changes in environmental variables such as barometric pressure may shift the calibration. After any adjustment of the controls, the analyst should repeat the zero and span gas checks and recalculate the relative differences to verify that the analyzer is sufficiently in calibration. The analyzer will be considered to be out of calibration if the relative differences remain greater than 5.0 percent.

The zero gas and diluted reference standard measurements that are performed for the assay of the diluted candidate standard may also be used for the zero gas and span gas checks.

2.3.6 Selection of Gas Dilution Flow Rates or Gas Concentration Settings

The flow rates or settings used for the zero gas, reference standard, and candidate standard should be selected carefully to provide diluted concentrations for both the candidate and reference standards that fall in the well-characterized region of the analyzer's calibration curve. The diluted concentration of the candidate standard may be greater than or lesser than the diluted concentration of the reference standard. Any assay error due to the dilution process will be reduced if the same dilution flow-rate ratio or concentration setting can be used for both the candidate and reference standards. Select the diluted concentrations of the reference and candidate standards, and select flow rates or concentration settings that will produce the highest analyzer responses within the well-characterized region of the analyzer's calibration curve.

If the same dilution flow-rate ratio or concentration setting cannot be used for both the candidate and reference standards, select different ratios or settings for the candidate and reference standards to produce concentrations that are approximately equal and that fall in the well-characterized region of the analyzer's calibration curve. Select flow rates or settings such that only one of the apparatus controls must be adjusted when switching from the reference standard to the candidate standard, or vice versa. Where a choice of analyzer ranges is available, higher dilution ratios or lower concentration settings will reduce the consumption of the standards.

2.3.7 Flowmeter Type and Flowmeter Calibration

Figure 2-3 shows flow measurement ports on valves V2 and V3. In this configuration, a single flowmeter can be used to measure both the standard flow rate and the zero gas flow rate. Such an approach would reduce measurement errors arising from differences in the calibration of multiple flowmeters. Alternatively, the flow rates can be measured at the outlet of the dilution apparatus, with the rotameter vent temporarily plugged. In either case, a NIST-traceable volumetric flowmeter such as a wet test meter, a thermal mass flowmeter, or a soap bubble flowmeter can be used (see Subsection 2.1.2). Each flow rate must be measured separately while the other flow rates are set to zero. Care must be exercised to ensure that each measured flow rate remains constant when combined with the other flow rate(s) and between the time of measurement and the time of the assay. Additionally, care must be taken to ensure that the flowmeter does not cause any back pressure in the gas stream and any resulting change in the flow rate through the flow controller.

If in-line flowmeters are mounted directly downstream of the flow controllers, they may not operate at atmospheric pressure because of back pressure from downstream components. Also, this back pressure may vary as a function of the total flow rate. Thus, the flowmeters must compensate for the variable in-line pressure. Thermal mass flowmeters do not need to be corrected for pressure effects. Measurements from pressure-sensitive flowmeters such as rotameters or from volumetric flowmeters such as wet test meters must be carefully corrected for the actual gas pressure during the flow measurement. An in-line flowmeter must not contaminate or react with the gas mixture passing through it.

The flowmeters used should be stable, repeatable, and linear and have good resolution. If possible, select flow rates or a flowmeter range such that the flow rates to be measured fall in the upper half of the flowmeter's range. The flowmeters should be carefully calibrated at several flow rates to prove linearity. The calibration should be accurate to plus or minus 1 percent and must be referenced to an accurate flow rate or volumetric standard traceable to a NIST primary standard. Flowmeter calibrations should be checked and recertified periodically, as determined by stability information such as a chronological control chart of calibration data.

All volumetric flow-rate measurements must be corrected or referenced to the same temperature and pressure conditions, such as EPA-standard conditions (i.e., 760 millimeters of mercury (mm Hg), 25 °C) or the ambient temperature and pressure conditions prevailing in the laboratory during the assay. Measurements using wet test meters and soap bubble flowmeters also must be corrected for the saturation of the gas stream with water vapor in the moist interiors of these flowmeters. The equation to correct the flow rate for temperature, pressure, and humidity effects is given below:

$$\text{Flow Rate} = \frac{\text{Volume}}{\text{Time}} \left(\frac{P_M \quad P_{WV}}{P_S} \right) \left(\frac{T_S}{T_M} \right)$$

where

P_M = measured barometric pressure (mm Hg);
P_{WV} = partial pressure of water vapor (mm Hg);
P_S = standard pressure (mm Hg);
T_S = standard temperature (298.2 K); and
T_M = measured ambient temperature (273.2 + °C).

Measurement of reference and candidate standard flow rates with the same flowmeter and measurement of both dilution zero gas flow rates with the same flowmeter tend to reduce measurement errors, associated with the use of multiple flowmeters. These errors are more pronounced at higher dilution flow rate ratios. Note that the impact of any flow measurement error is reduced if the same dilution ratio can be used for both the reference standard and candidate standard measurements.

2.3.8 Assay Gases

2.3.8.1 Candidate Standard—

See Subsections 2.1.6, 2.3.2, and 2.3.6.

2.3.8.2 Reference Standard—

See Subsections 2.1.2, 2.1.6.4, 2.3.2, and 2.3.6. The reference standard used for the assay of the candidate standard must be a NIST SRM, an SRM-equivalent PRM, an NTRM or a GMIS. This standard need not be the same as any of the reference standards used for the span gas check or for the multipoint calibration. Information concerning the reference standard (e.g., cylinder identification number, certified concentration, etc.) must be recorded in the laboratory's records.

If the multipoint calibration data have been fitted to a linear (i.e., straight-line) model, then only a single reference standard need be measured during the assay of the candidate standard. If these data have been fitted to a quadratic or higher-order polynomial model, then at least two reference standards must be measured. One reference standard is adequate to determine the slope of a linear equation, but additional reference standards are needed to determine the curvature of quadratic or higher-order polynomial equations. The concentrations of the additional reference standards should be located at the maximum difference between the polynomial curve and the corresponding straight line between the zero gas and the highest-concentration reference standard.

2.3.8.3 Zero Gas—

See Subsection 2.1.9. Use the same zero gas for dilution of both candidate and reference gases. The analyst may substitute a low-concentration, NIST-traceable reference standard for the zero gas in zero gas checks and assays if there is reason to believe that the zero gas reading may not accurately represent the zero-intercept of the calibration equation. Information concerning the zero gas should be recorded in the laboratory's records.

2.3.9 Assay Procedure

1. Verify that the assay apparatus is properly configured as shown in Figure 2-3 or Figure 2-4 and as described in Subsection 2.3.3. Inspect the analyzer to verify that it appears to be operating normally and that all controls are set to their expected values. Record these control values in the laboratory's records.

2. Verify that the flowmeters, if used in the assay apparatus, are properly calibrated (see Subsection 2.3.7).

3. Verify that a multipoint calibration of the analyzer has been performed within 1 month prior to the assay date and that the dilution error is not excessive (see Subsections 2.1.7.2, 2.1.7.5, 2.3.4, and 2.3.5.1). Additionally, verify that the zero and span gas checks indicate that the analyzer is in calibration (see Subsection 2.3.5.4). Finally, verify that the concentrations of the diluted reference and candidate standards fall within the well-characterized region of the analyzer's calibration curve (see Subsection 2.3.2).

4. Determine and establish the flow rates or concentration settings of the gas mixtures (i.e., reference standard(s), candidate standard, and zero gas) that will be used for the assay (see Subsections 2.3.6, 2.3.7, and 2.3.5.2). Also check that the total flow rate coming from the mixing chamber will provide enough flow for the analyzer and sufficient excess to ensure that no ambient air will be drawn into the vent line. Changes in the sample pressure may change the calibration curve. When using the same flow rates for both candidate and reference standards, carefully set the delivery pressures of the two standards' pressure regulators to the same value so that there is no change in the flow rate when switching from one standard to the other.

Calculate the diluted reference standards' concentration using the following equation:

$$\text{Diluted Standard Conc.} = \left[\frac{\text{(Undiluted Standard Conc.) (Standard Flow Rate)}}{\text{(Standard Flow Rate + Zero Gas Flow Rate)}}\right]$$

Record the measured flow rates and the undiluted and diluted reference standard concentrations in the laboratory's records.

5. In succession, measure the zero gas, the diluted reference standard(s) and the diluted candidate standard using the analyzer. For each measurement, adjust the flow rates, if necessary, to those determined in step 4, and allow ample time for the analyzer to achieve a stable reading. If the reading for each measurement is not stable, the precision of the measurements will decline and the candidate standard might not be certifiable under this protocol. Record the analyzer response for each measurement, using the same response units (e.g., volts, millivolts, percent of scale, etc.) as was used for the multipoint calibration. At this point, do not convert the data into concentration values using the calibration equation. Do not perform any mathematical transformations of the data. These steps will be done later. Do not make any zero control, span control, or other adjustments to the analyzer during this set of measurements. Record these analyzer responses in the laboratory's records.

   The analyst may assay multiple candidate standards during the same assay session. For example, a single set of measurements may involve a zero gas, a diluted reference standard, and three diluted candidate standards. Criteria that apply to the assay of one candidate standard apply to the assay of multiple candidate standards. The analyst should be aware that the effect of any short-term calibration drift will be greater when multiple candidate standards are assayed. This greater effect is due to the longer period of time between reference standard measurements. Unacceptable uncertainties of the estimated concentrations for the diluted candidate standards may occur as a result of the longer assay session.

6. Conduct at least two additional sets of measurements, as described in step 5 above. However, for these subsequent sets of measurements, change the order of the three measurements (e.g., measure the reference standard, zero gas, and candidate standard for the second set and measure the zero gas, candidate standard, and reference standard for the third set, etc.). Changing the order that the gas mixtures are measured helps the analyst to discover any effect that one measurement has on subsequent measurements. The number of sets of measurements will have been determined during the analysis of the multipoint calibration data such that the 95-percent uncertainty for the regression-predicted concentration of the candidate standard is ≤ 1 percent of the concentration of the reference standard.

7. If any one or more of the measurements of a set of measurements is invalid or abnormal for any reason, discard all three measurements and repeat the set of measurements. Such measurements may be discarded if the analyst can demonstrate that the experimental conditions were inappropriate during these measurements. Data cannot be discarded just because they appear to be outliers, but may be discarded if they satisfy statistical criteria for testing outliers.[15] The analyst must record the discarded data and a brief explanation as to why these data were discarded in the laboratory's records.

8. The spreadsheet described in Appendix A or equivalent statistical techniques must be used to calculate the estimated concentration and a 95-percent uncertainty for the candidate standard based on data from the assay measurements and from the multipoint calibration. The use of both sets of data in the statistical analysis produces an estimated concentration with smaller uncertainty while correcting for any minor calibration drift that may have occurred since the multipoint calibration. Record the estimated concentration and the 95-percent uncertainty in the laboratory's records.

   The spreadsheet also calculates the percentage of the uncertainty that is due to the multipoint calibration. This percentage is needed for the total uncertainty calculations when two or more assays fall under the same multipoint calibration. Record this value in the laboratory's records.

   The analyst should investigate any of the measurements that appear to be outliers. Such data may be discarded if the analyst can demonstrate that the experimental conditions were inappropriate during these measurements. Data cannot be discarded just because they appear to be outliers, but may be discarded if they satisfy statistical criteria for testing outliers. The analyst must record any discarded data as well as a brief summary of the investigation in the laboratory's records.

9. If the multipoint calibration data and the assay data underwent any mathematical transformations before their statistical analysis, perform the reverse transformations for the estimated concentration and the 95-percent uncertainty. Record the transformed values in the laboratory's records.

10. Finally, the certified undiluted concentration for a candidate standard containing a unreactive gas mixture and requiring only a single assay can be calculated from the mean concentration of the diluted candidate standard as follows:

$$\text{Certified Undiluted Conc.} = \frac{\text{(Mean Diluted Conc.) (Total Gas Flow Rate)}}{\text{(Standard Flow Rate)}}$$

where Total Gas Flow Rate = Standard Flow Rate + Zero Gas Flow Rate .

2.3.10 Stability Test for Newly Prepared Standards

Newly prepared candidate standards that contain reactive gas mixtures must be assayed on at least two dates that are separated by at least 7 days. See Subsections 2.1.6.1 and 2.1.6.2. The spreadsheet described in Appendix C or equivalent statistical techniques must be used to evaluate the stability of the candidate standard and to calculate the overall estimated concentration and the total uncertainty for the candidate standard.

The stability is evaluated by comparing the 95-percent confidence limits (i.e., estimated concentration ±95-percent uncertainty) for the candidate standard from the two or more assays. If the confidence limits overlap, the candidate standard can be considered to be stable and may be certified. In the spreadsheet, all cells in the comparisons table will be "true." If the confidence limits do not overlap, the candidate standard may be unstable or there may be analytical problems associated with the assays or the reference standards. One or more cells in the comparisons table will be "false." The analyst must either disqualify the candidate standard or investigate why the confidence limits do not overlap. The analyst may conduct additional assays until stability is

achieved and add the additional data to the spreadsheet. Data from a nonoverlapping assay may be discarded and the remaining data used to determine the overall estimated concentration and the total uncertainty provided the confidence limits overlap. Finally calculate a certified undiluted concentration using the above equation. Record these values and any discarded data in the laboratory's records.

2.3.11 Certification Documentation

See Subsections 2.1.4 and 2.1.5.

2.3.12 Recertification Requirements

See Subsections 2.1.6.3 and 2.1.6.4.

SECTION 3

EPA TRACEABILITY PROTOCOL FOR ASSAY AND CERTIFICATION OF PERMEATION DEVICE CALIBRATION STANDARDS

3.1 GENERAL INFORMATION

3.1.1 Purpose and Scope of the Protocol

This protocol describes three procedures for assaying the permeation rate of a permeation device calibration standard and for certifying that the assayed permeation rate is traceable to National Institute of Standards and Technology (NIST) reference standards. This protocol is mandatory for certifying the permeation device calibration standards used for the pollutant monitoring that is required by the regulations of the *Code of Federal Regulations*, Chapter 40, Parts 50 and 58[3,4] for the calibration and audit of ambient air quality analyzers. This protocol covers the assay and certification of sulfur dioxide (SO_2) and nitrogen dioxide (NO_2) permeation device calibration standards. This protocol may be used by permeation device producers, standard users, or other analytical laboratories. The assay procedure may involve the comparison of these standards to permeation device reference standards (i.e., Procedure P1), to compressed gas reference standards (i.e., Procedure P2), or to mass reference standards (i.e., Procedure P3).

3.1.2 Reference Standards

The permeation device reference standards that may be used under this protocol are NIST Standard Reference Material (SRM) numbers 1625 and 1626. These SRMs (listed in Table 3.1) are permeation tubes containing SO_2. In the future, NIST may develop additional SRMs, which may be used as reference standards under this protocol.

The compressed gas reference standards that may be used under this protocol are NIST SRMs, Netherlands Measurement Institute Primary Reference Materials (NMi PRMs) that are equivalent to SRMs, NIST traceable reference materials (NTRMs), or gas manufacturer's intermediate standards (GMISs). These standards are described in Subsection 2.1.2 of this report.

The uncertainty of SRMs, NTRMs, and PRMs is expressed as a 95-percent confidence interval, which is the one-sigma uncertainty multiplied by a coverage factor almost always equal to 2.[9] This estimate includes allowances for the uncertainties of known sources of systematic error as well as the random error of measurement. A value of one-half of the stated uncertainty of these reference standards should be used in calculating the total analytical uncertainty of standards that are certified under this protocol (see Appendix C).

Mass reference standards that may be used under this protocol must be traceable to NIST mass standards.[18-20] Additionally, they must have an individual tolerance of no more than 0.05 mg. Examples of mass reference standards that meet these specifications are American National Standards Institute/American Society for Testing and Materials (ANSI/ASTM) Classes 1, 3, and 4. The mass reference standards must be recalibrated on a regular basis (e.g., yearly) at a NIST-

TABLE 3-1. NIST SRM PERMEATION DEVICE REFERENCE STANDARDS

NIST SRM no.	Permeation device type	Device length (cm)	Nominal permeation rate at 30 °C (µg/min)	Nominal concentration (in µmol/mol) at various dilution gas flow rates (L/min)		
				1	5	10
1625	Sulfur dioxide	10	3.7	1.4	0.28	0.14
1626	Sulfur dioxide	5	2.1	0.8	0.16	0.08

accredited State weights and measures laboratory or at a calibration laboratory that is accredited by the National Voluntary Laboratory Accreditation Program (NVLAP),[10,11] which is administered by NIST, or by the International Laboratory Accreditation Conference (ILAC). The recalibration frequency is to be determined from records of previous recalibrations of these standards.

Two separate sets of mass reference standards are recommended. Working calibration standards should be used for routine permeation device weighings and should be kept next to the analytical balance in a protective container. Laboratory primary standards should be handled very carefully and should be kept in a locked compartment. The working standards should be compared to the laboratory primary standards every 3 or 6 months to check for mass shifts associated with handling or contamination. The current masses of the working standards as traced to the laboratory primary standards should be recorded in a laboratory notebook and should be used to check the calibration of the analytical balance.

Always use smooth, nonmetallic forceps for handling mass reference standards. The standards are handled only with these forceps, which are not used for any other purpose. Mark these forceps to distinguish them from the forceps that are used to handle permeation devices. Handle the standards carefully to avoid damage that may alter their masses.

The temperature reference standards that may be used under this protocol must be liquid-in-glass thermometers having scale tolerances and uncertainties that conform to NIST Special Publication 250-23.[21] They must have an uncertainty of no more than 0.05 (°C). The thermometers must have serial numbers etched or permanently marked into the glass and a manufacturer's calibration certificate of traceability to NIST standards. They must be recalibrated on a regular schedule (e.g., yearly) according to NIST guidelines[22] by the user, a NIST-accredited State weights and measures laboratory, or an NVLAP- or ILAC-accredited calibration laboratory.

3.1.3 Selecting a Procedure

Procedures P1 and P2 are applicable to the assay and certification of candidate permeation device calibration standards using an ambient air quality analyzer. Procedure P1 provides for the assay to be referenced to a permeation device reference standard. Procedure P2 provides for the assay to be referenced to a compressed gas reference standard.

Procedure P3 is applicable to the assay and certification of candidate standards using an analytical balance. This procedure provides for the assay to be referenced to a mass reference standard.

3.1.4 Using the Protocol

The assay/certification protocol described here is designed to minimize both systematic and random errors in the assay process. Therefore, the protocol should be carried out exactly as it is described. The assay procedures in this protocol include one possible design for the assay apparatus. The analyst is not required to use this design and may use alternative components and configurations that produce equivalent-quality measurements. Nonreactive materials (e.g., Teflon®, stainless steel, or glass) and clean, noncontaminating components should be used in those portions of the apparatus that are in contact with the gas mixtures being assayed.

3.1.5 Certification Documentation

Each certified permeation device calibration standard must be documented in a written certification report and this report must contain at least the following information:

1. Permeation device identification number;

2. The contents of the permeation device;

3. Certified permeation rate (in nanograms (ng) per minute);

4. The certification temperature (in °C to the nearest 0.1°);

5. The dilution gas (i.e., air or nitrogen) used during the assay (for procedures P1 and P2);

6. Date of the assay/certification;

7. Identification of the reference standards used in the assay: NIST SRM number, NIST sample number, and certified concentration or permeation rate for an SRM; cylinder identification number and certified concentration for an SRM-equivalent PRM, an NTRM or GMIS; manufacturer, model number and serial number for a mass or temperature reference standard. The certification documentation must identify the type of reference standard used in the assay;

8. Statement that the assay/certification was performed according to this protocol and that lists the assay procedure (e.g., Procedure P1) used;

9. The analytical method that was used in the assay;

10. Identification of the laboratory where the standard was assayed and certified;

11. Chronological record of all certifications for the standard by the certifying laboratory;

12. A statement that the standard will retain its certification only as long as 5 percent of the original liquid weight or a visible amount of liquid remains in it;

13. The environmental exposure conditions (e.g., temperature and moisture) that will invalidate the certification; and

14. A statement of the overall analytical uncertainty estimate associated with the assay of the candidate standard. The estimate must include the uncertainty associated with the reference standard.

This certification documentation must be given to the purchaser of the standard. The permeation device producer must maintain laboratory records and certification documentation for 3 years after the standard's certification date. A permeation device producer or other vendor may redocument an assayed and certified standard that it has purchased from another permeation device producer and that it wishes to sell to a third party. However, the new certification documentation must clearly list the permeation device producer or other laboratory where the standard was assayed.

3.1.6 Certification Label

The permeation device calibration standard must be labeled with its identification number.

3.1.7 Assay/Certification of Candidate Permeation Device Calibration Standards

3.1.7.1 Permeation Device Design—

Permeation devices are designed and constructed in various ways, but all devices consist of a sealed chamber containing liquified gas and a permeable area through which the gas is allowed to permeate. The permeated gas is swept and diluted with a measured volumetric flow rate of dry air or nitrogen to create a quantitative concentration of the pollutant gas.

3.1.7.2 Precautions for Use and Storage of Permeation Devices—

The permeation rate of all permeation devices is critically dependent on temperature; a permeation device is useful as a concentration standard only when its temperature is precisely controlled and accurately measured, and an accurately metered dilution gas flow rate is provided.

The inaccuracy of gaseous pollutant concentration standards that are produced by permeation devices may increase due to physical or chemical sorption of the permeated gas in the permeation system. This sorption will have a larger effect on the inaccuracy as the concentration decreases. Nonreactive materials (e.g., Teflon®, stainless steel, or glass) and clean, noncontaminating components should be used in those portions of the permeation system that are in contact with the permeated gas.

The reproducibility of the certified permeation rate of a permeation device may be adversely affected by exposure of the device to temperatures greater than the specified operating or storage temperature range for the device or by exposure to excessive moisture. NO_2 permeation devices must be stored under dry conditions and preferably at a temperature between 20 and 35 °C, or as otherwise recommended by the manufacturer. SO_2 permeation devices may be refrigerated for storage.

It appears that there is a limited temperature range at which NO_2 permeation devices can be used as standards. This temperature range is conservatively given as 20 to 35 °C.[23] Low or high temperature storage of NO_2 permeation devices is not recommended.

NO_2 permeation devices should be stored in and used in dry dilution gas. One study showed that NO_2 permeation rates were significantly lower in moderately humid air (i.e., 30 to 40 percent relative humidity) than in dry air on the preceding day.[24] Furthermore, the permeation rates did not return to the original levels after dry air had passed over the device for 24 hours. Another study found that NO_2 concentrations from a permeation device declined by about one-third as relative humidity levels increased from 0 to 100 percent.[25]

Candidate standards being certified under Procedure P3 must be stored under constant temperature conditions between assays. A storage container for this application is described in the procedure.

When stored at a temperature other than the assay temperature, some permeation devices require an equilibration period at the assay temperature to reach thermal equilibrium and a stable, accurate permeation rate. When transferred from a different storage temperature, thin-walled permeation devices should be maintained at the assay temperature with a fixed dilution flow rate for at least 48 hours before use or before certification. Temperature changes of >10 °C may require equilibration periods of up to 15 days for NO_2 permeation devices to attain a stable permeation rate.[23,26] Upon return to the original temperature, some devices may not return to the same permeation rate as before the temperature change. Other types of permeation devices may require longer equilibration periods. Observe any manufacturer's recommendations for equilibration and use.

3.1.7.3 Equilibration of Newly Prepared Permeation Devices—

A newly prepared permeation device must be equilibrated for at least 48 hours at the assay temperature before being assayed for the first time. The equilibration period may be 100 hours or longer for some permeation devices.[26] This period will vary as a function of the permeating compound, the material and the thickness of the permeating surface and the temperature.

3.1.7.4 Certification Conditions for Permeation Device Calibration Standards—

A standard will retain its certification only as long as 5 percent of the original liquid weight or a visible amount of liquid remains in it. A standard loses its certification if it is exposed for prolonged periods of time to excessive moisture or to temperatures greater than 15 °C above its certification temperature. A standard that loses its certification must be reassayed before it can be certified for further use.

3.1.8 Technical Variances

Permeation device producers, standard users, and other analytical laboratories may petition the U.S. EPA for technical variances to the assay procedures in this protocol. A technical variance allows the use of a specific alternative assay procedure for candidate standards, which can be certified under this protocol. The petitioner must send a written request with a detailed description of the alternative assay procedure and supporting analytical data to: EPA Traceability Protocol Project, U.S. EPA, Mail Code 47, Research Triangle Park, NC 27711. The supporting analytical data must demonstrate the equivalence of the alternative assay procedure with the procedures given in this protocol. Technical variances may also be given for alternative temperature ranges of certifying or storing permeation devices provided that supporting analytical data are provided with the written request.

Permeation device producers, standard users, and other analytical laboratories may petition the U.S. EPA to allow the assay and certification of permeation devices that contain gases or liquified gases other than SO_2 and NO_2. The petitioner must send a written request with a detailed description of the permeation device and supporting analytical data to the address given above. The supporting analytical data must demonstrate that the permeation rate for the proposed device can be accurately determined, that only the specified compound is permeating, that the rate is stable over the lifetime of the device, and that the rate is not changed by temperature and humidity effects.

3.2 PROCEDURE P1: ASSAY AND CERTIFICATION OF PERMEATION DEVICE CALIBRATION STANDARDS REFERENCED TO A PERMEATION DEVICE REFERENCE STANDARD

3.2.1 Applicability

This procedure may be used to assay the permeation rate of a candidate SO_2 or NO_2 permeation device calibration standard, based on the permeation rate of a permeation device reference standard of the same pollutant compound, and to certify that the assayed permeation rate is traceable to the reference standard. The procedure employs a low-concentration range (i.e., ambient air quality level) pollutant gas analyzer to compare quantitatively diluted concentrations from the two permeation devices for the assay of the candidate device. This procedure may be used for the assay of multiple candidate standards during the same assay session. Criteria that apply to the assay of one candidate standard apply to the assay of multiple candidate standards. This procedure may be used by permeation device producers, standard users, or other analytical laboratories.

3.2.2 Limitations

1. The permeation rate of the candidate standard may be greater than or lesser than the permeation rate of the reference standard. However, the diluted concentrations from both standards must lie within the well-characterized region of the analyzer's multipoint calibration (see Subsection 2.1.7.2). Additionally, the 95-percent uncertainty for the regression-predicted concentration of the diluted candidate standard must be ≤ 1.0 percent of the concentration of the diluted reference standard. This uncertainty is obtained from the statistical analysis of the multipoint calibration data using the spreadsheet described in Appendix A or using equivalent statistical techniques (e.g., the worksheet for linear relationships given in Chapter 5 of Reference 15). This criterion means that the uncertainty associated with the multipoint calibration determines the concentration range over which a diluted candidate standard may be assayed.

2. A quantitatively accurate flow measurement and dilution system is required.

3. A source of clean, dry zero gas is required.

4. This procedure is designed to assay the permeation rate of a candidate standard that is mounted in a specially designed assay dilution system; the procedure does not accommodate the certification of a candidate standard that is mounted in its own self-contained dilution/flow measurement system.

3.2.3 Assay Apparatus

Figure 3-1 illustrates the components and configuration of one possible design for the assay apparatus, including a common dilution system for both the reference and candidate standards. The configuration is designed to allow convenient routing of zero gas and diluted concentrations of the reference and candidate standards, in turn, to the analyzer for measurement, as selected by valves V1, V2, and V3. Three gas flow controllers (i.e., C1, C2, and C3) regulate the total dilution flow rates for both the reference and candidate permeation devices and the purge gas flow rate. These gas flow controllers may be needle valves, capillary tubes, thermal mass flow controllers, or other suitable devices. The flow rates must be controlled to within 1.0 percent variation during the assay.

The total dilution flow rate is measured by a single, common flowmeter (i.e., M1). Valve V1 directs a portion of the total dilution flow through one or the other of the two temperature-controlled permeation device chambers to sweep up the permeated pollutant gas. This sweep flow rate is monitored by an auxiliary flowmeter for each permeation device (i.e., M2 and M3). These auxiliary flowmeters need not be accurately calibrated, since only the total dilution flow measured by flowmeter M1 is used in the dilution calculation. Gas flow controllers C1 and C3 can be used to adjust and balance the flow rates of the two gas streams sweeping through the permeation device chambers. The permeation device that is not being analyzed receives a purge gas stream to avoid the buildup of high pollutant concentrations in the chamber. This purge gas flow is vented through valve V2 and is not measured by flowmeter M1.

The assay apparatus illustrated in Figure 3-1 may be modified by the addition of multiple candidate standard chambers. These chambers may be set to different temperatures.

If it is necessary to use different dilution flow rates for the candidate and reference permeation devices (see Subsection 3.2.6), separate flow controllers for the two permeation devices may be used for the two different flows. However, the same flowmeter should always be used to measure these two flow rates to minimize systematic flow measurement errors.

The mixing chamber combines the gas streams and should be designed to provide turbulence in the flow to ensure thorough mixing of the two gas streams. The diluted gas mixtures are routed to the analyzer through a union tee tube fitting, which vents excess gas flow. Normally, the excess gas is vented to the atmosphere without any obstructions in the tubing and the gas entering the analyzer is at near-atmospheric pressure. However, the excess gas can be routed through an uncalibrated rotameter by rotation of a three-way valve (i.e., V4). The rotameter is used to demonstrate that the total gas flow rate exceeds the sample flow rate of the analyzer and that no room air is being drawn in through the vent line (also see Subsection 3.1.4). Check the apparatus carefully for leaks and correct all leaks before use.

The mean temperatures of the reference standard chamber and the candidate standard chamber must be controlled to within 0.05 °C of the setpoint with a temperature stability of ±0.05 °C. These temperatures must be measured with a NIST-traceable thermometer having a measurement uncertainty of ±0.05 °C or less.

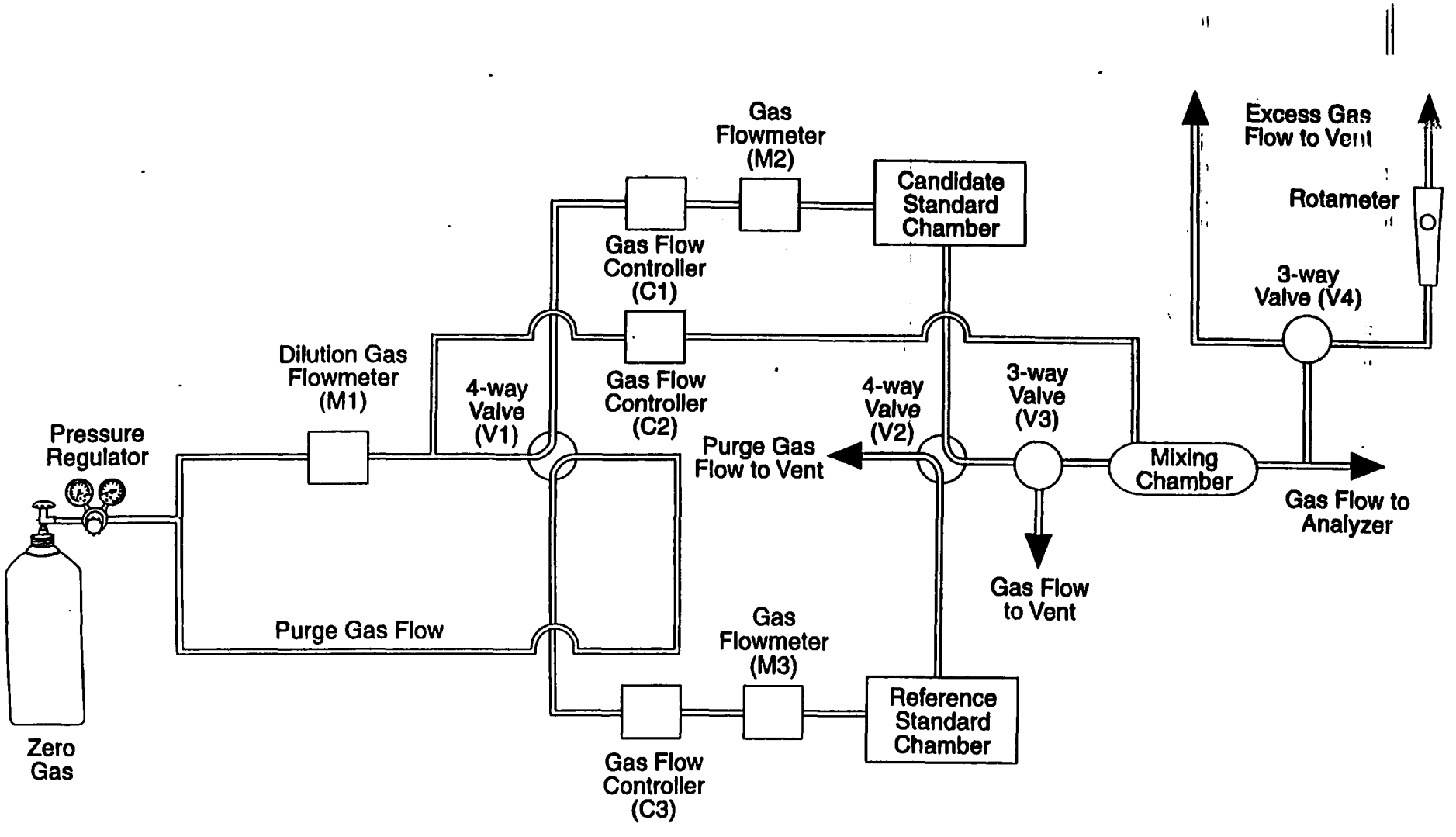

Figure 3-1. One possible design of the apparatus for the assay of permeation device calibration standards referenced to a permeation device reference standard (Procedure P1).

3.2.4 Pollutant Gas Analyzer

See Subsection 2.3.4. The pollutant gas analyzer must have a well-characterized calibration curve and a range capable of measuring the diluted concentrations of both the candidate and the reference standards. It must have good resolution, good precision, a stable response, and low output signal noise. In addition, the analyzer must have good specificity for the pollutant of interest so that it has no detectable response to any contaminant that may be contained in the standards. A suitable analyzer with acceptable performance specifications may be selected from the list of EPA-designated reference and equivalent method analyzers.[17]

The analyzer should be connected to a high-precision data acquisition system (e.g., a strip chart recorder), which must produce an electronic or paper record for documentation of the analyzer responses obtained during the assay. Additionally, a digital panel meter with four-digit resolution, a digital voltmeter, data logger, or other data acquisition system must be used to obtain numerical values of the analyzer's response. More precise values will be obtained if these instruments have some data averaging capability. The assay record must be maintained for 3 years after the standard's certification date.

If the analyzer has not been in continuous operation, turn it on and allow it to stabilize (e.g., for at least 12 hours) before beginning any measurements.

3.2.5 Analyzer Calibration

3.2.5.1 Multipoint Calibration—

See Subsections 2.1.7.2 and 2.1.7.4. Following completion of the multipoint calibration, the accuracy of the assay apparatus must be checked to verify that the error associated with the dilution is not excessive. This accuracy check involves the measurement of a diluted check standard. This check standard must be a permeation device that is traceable to a NIST SRM. It must have a certified permeation rate that is different from that of the reference standard used during the multipoint calibration. Information concerning this standard (e.g., permeation device identification number, certified permeation rate) must be recorded in the laboratory's records. The diluted concentration of the check standard must fall in the well-characterized region of the calibration curve.

Make three or more discrete measurements of the diluted check standard. "Discrete" means that the analyst must change the gas mixture being sampled by the analyzer between measurements. For example, the analyst might alternate between measurements of the diluted check standard and the zero gas. Record these measurements in the laboratory's records.

Next the analyst must verify that the dilution error is not excessive. For the diluted check standard measurements, calculate the relative difference (in percent) between the mean analyzer response and the corresponding response that is predicted from the multipoint calibration regression equation and the diluted check standard concentration. That is,

$$\text{Relative Difference} = 100 \left[\frac{\text{Mean Analyzer Response} - \text{Predicted Response}}{\text{Predicted Response}} \right]$$

If the relative difference is greater than 1.0 percent, the dilution error is excessive. The analyst must investigate why the dilution error is excessive. The problem may be due to errors in the reference

standard and check standard permeation rates, errors in the assay apparatus or to some other source. Assays may not be conducted until the relative difference for a subsequent accuracy check is ≤1.0 percent.

3.2.5.2 Analyzer Range—
See Subsection 2.3.5.2.

3.2.5.3 Linearity—
See Subsection 2.3.5.3.

3.2.5.4 Zero and Span Gas Checks—
See Subsection 2.3.5.4.

3.2.6 Selection of Gas Dilution Flow Rates

The dilution flow rates used for the reference and candidate standards should be selected carefully to provide diluted concentrations for both standards that fall in the well-characterized region of the analyzer's calibration curve. Potential errors in the assayed permeation rate due to dilution flow rate measurement error will be greatly reduced if the same dilution flow rates can be used for both standards. If the same dilution flow rates cannot be used for both standards, select different dilution flow rates for the candidate and reference devices to provide approximately equal diluted concentrations that fall in the well-characterized region. Additionally, the magnitude of the 95-percent confidence limits for the estimated concentration of the diluted candidate standard must be ≤±1 percent of the concentration of the diluted reference standard.

3.2.7 Flowmeter Type and Flowmeter Calibration

Flowmeter M1, as shown in Figure 3-1, measures in-line flow rates and does not operate at atmospheric pressure because of backpressure from downstream components. Also, this backpressure is variable, depending on the total dilution flow rate. Thus, the type of flowmeter used must compensate for the variable in-line pressure. Measurements from a pressure-sensitive flowmeter such as a rotameter or a wet test meter must be carefully corrected for the actual in-line pressure during the total dilution flow rate measurement.

Alternatively, the flow rates can be measured at the outlet of the dilution apparatus, with the excess gas flow vent temporarily plugged. In this case, a volume-type meter such as a wet test meter or a soap film flowmeter can be used, and flow measurements may be conveniently referenced to atmospheric pressure. Each flow rate must be measured independently while the other flow rate is set to zero. Great care must then be exercised to ensure that each measured flow rate remains constant between the time of measurement and the time of the assay.

The flowmeter used should be stable, repeatable, linear, and have good resolution. The flowmeter must not contaminate or react with the gas mixture passing through it. If possible, select flow rates or a flowmeter range such that the measured flow rates fall in the upper half of the flowmeter's range. The flowmeter should be carefully calibrated at several flow rates to prove linearity. The calibration should be accurate to ±1.0 percent, referenced to an accurate flow or volume standard traceable to a NIST primary standard (see Subsection 3.1.2). The flowmeter calibration should be checked and recertified on a regular schedule (e.g., yearly). The recertification

frequency is to be determined from stability information such as a chronological control chart of calibration data.

All volumetric flow rate measurements must be corrected or referenced to the same temperature and pressure conditions, such as EPA standard conditions (25 °C and 760 mm Hg) or the ambient temperature and pressure conditions prevailing in the laboratory during the assay. Measurements using wet test meters and soap bubble flowmeters also must be corrected for the saturation of gas stream with water vapor in the moist interiors of these flowmeters. The equation to correct the flow rate for temperature, pressure, and humidity effects is given below:

$$\text{Flow Rate} = \frac{\text{Volume}}{\text{Time}} \left(\frac{P_M - P_{WV}}{P_S} \right) \left(\frac{T_S}{T_M} \right)$$

where

P_M = measured barometric pressure (mm Hg);
P_{WV} = partial pressure of water vapor (mm Hg);
P_S = standard pressure (mm Hg);
T_S = standard temperature (298.2 K);
T_M = measured ambient temperature (273.2 + °C).

Measurement of both dilution flow rates with the same flowmeter tends to reduce systematic flow measurement error. Note particularly that flow measurement error is greatly reduced if the same dilution flow rates can be used for both the reference and candidate standards.

3.2.8 Permeation Devices

3.2.8.1 Candidate Standard—

See Subsections 3.1.7 and 3.2.2. Follow the manufacturer's instructions for equilibration and for use of the candidate standard and for selecting the temperature at which it is to be assayed and certified. The candidate standard should be assayed at the same temperature at which it will be subsequently used. The mean operating temperature of the candidate standard chamber must be controlled to within 0.05 °C of the setpoint with a temperature stability of ±0.05 °C. This temperature must be measured with a NIST-traceable thermometer with a measurement uncertainty of ±0.05 °C or less (see Subsection 3.1.2).

3.2.8.2 Reference Standard—

See Subsections 3.1.2, 3.1.7.1, 3.1.7.2, and 3.2.2. Follow NIST's instructions for equilibration and use of the SRM reference standard and for selecting an operating temperature within its certified range. The mean operating temperature of the reference standard chamber must be controlled to within 0.05 °C of the setpoint with a temperature stability of ±0.05 °C. This temperature must be measured with a NIST-traceable thermometer with a measurement uncertainty of ±0.05 °C or less.

3.2.8.3 Zero Gas—

See Subsection 2.1.8. Use the same zero gas for dilution of both the candidate and reference standards.

3.2.9 Assay Procedure

1. Verify that the assay apparatus is properly configured as shown in Figure 3-1 and described in Subsection 3.2.3. Inspect the analyzer to verify that it appears to be operating normally and that all controls are set to their expected values. Record these control values in the laboratory's records.

2. Determine and establish the operating temperatures for the reference and candidate standards in their respective temperature-controlled chambers. Install the standards and, with zero gas flowing over both standards, allow ample time for the standards to equilibrate (see Subsection 3.1.7.2). Record the temperatures in the laboratory's records.

3. Verify that flowmeter M1 is properly calibrated (see Subsection 3.2.7).

4. Verify that a multipoint calibration of the analyzer has been performed within 1 month prior to the assay date (see Subsections 2.1.7.2, 2.1.7.5, and 2.3.4). Additionally, verify that the zero and span gas checks indicate that the analyzer is in calibration (see Subsection 2.3.5.4).

5. Determine and establish the dilution flow rates and diluted concentrations for the reference and candidate standards that will be used for the assay (see Subsections 3.2.6, 3.2.7, and 3.2.5.2). Use an estimated permeation rate for the candidate standard in these calculations. Calculate the diluted standard concentrations (in ppm) using the following equation:

$$\text{Diluted Standard Conc.} = \left[10^{-3}\right]\left[\frac{MV}{MW}\right]\left[\frac{\text{Permeation Rate}}{\text{Dilution Flow Rate}}\right]$$

where

MV = Molar volume of the dilution gas (liters/mole);

= $(0.08206)\ T_m$

MW = Molecular weight of the dilution gas (grams/mole); permeation rate is given in nanograms/minute; and dilution flow rate is given in liters/minute.

Ensure that the diluted candidate and reference standard concentrations are within the well-characterized region of the analyzer's calibration curve (see Subsection 2.3.2). Also check that both dilution flow rates will provide enough flow for the analyzer, with sufficient excess to ensure that no ambient air will be drawn into the vent line, and without increasing the pressure of the sample delivered to the analyzer. If possible, use the same dilution flow rate for both standards. Record the measured flow rates in the laboratory's records.

6. In succession, measure the zero gas, the diluted reference standard and the diluted candidate standard using the analyzer. Use valves V1, V2, and V3 to select each of the three gas mixtures for measurement. For each measurement, adjust the flow rates,

if necessary, to those determined in step 5, and allow ample time for the analyzer to achieve a stable reading. If the reading for each measurement is not stable, the precision of the measurements will decline and the candidate standard might not be certifiable under this protocol. Record the analyzer response for each measurement, using the same response units (e.g., volts, millivolts, percent of scale, etc.) as was used for the multipoint calibration. At this point, do not convert the data into concentration values using the calibration equation. Do not perform any mathematical transformations of the data. These steps will be done later. Do not make any zero control, span control, or other adjustments to the analyzer during this set of measurements. Record these analyzer responses in the laboratory's records.

The analyst may assay multiple candidate standards during the same assay session. For example, a single set of measurements may involve a zero gas, a diluted reference standard, and three diluted candidate standards. Criteria that apply to the assay of one candidate standard apply to the assay of multiple candidate standards. The analyst should be aware that the effect of any short-term calibration drift will be greater when multiple candidate standards are assayed. This greater effect is due to the longer period of time between reference standard measurements. Unacceptable uncertainties of the estimated concentrations for the diluted candidate standards may occur as a result of the longer assay session.

7. Conduct at least two additional sets of measurements, as described in step 6 above. However, for these subsequent sets of measurements, change the order of the three measurements (e.g., measure the reference standard, zero gas, and candidate standard for the second set and measure the zero gas, candidate standard, and reference standard for the third set, etc.). Changing the order that the gas mixtures are measured helps the analyst to discover any effect that one measurement has on subsequent measurements. The number of sets of measurements will have been determined during the analysis of the multipoint calibration data such that the 95-percent uncertainty for the regression-predicted concentration is ≤ 1 percent of the concentration of the reference standard.

8. If any one or more of the measurements of a set of measurements is invalid or abnormal for any reason, discard all three measurements and repeat the set of measurements. Such measurements may be discarded if the analyst can demonstrate that the experimental conditions were inappropriate during these measurements. Data cannot be discarded just because they appear to be outliers, but may be discarded if they satisfy statistical criteria for testing outliers.[16] The analyst must record any discarded data and a brief explanation about why the data were discarded in the laboratory's records.

9. The spreadsheet described in Appendix A or equivalent statistical techniques must be used to calculate an estimated concentration and a 95-percent uncertainty for the diluted candidate standard based on data from the assay measurements and from the multipoint calibration. The use of both sets of data in the statistical analysis produces an estimated concentration with smaller uncertainty while correcting for any minor calibration drift that may have occurred since the multipoint calibration. Record the estimated concentration and the 95-percent uncertainty in the laboratory's records.

The spreadsheet also calculated the percentage of the uncertainty that is due to the multipoint calibration. This percentage is needed for the total uncertainty calculations when two or more assays fall under the same multipoint calibration. Record this value in the laboratory's records.

The analyst should investigate any of the measurements that appear to be outliers. Such data may be discarded if the analyst can demonstrate that the experimental conditions were inappropriate during these measurements. Data cannot be discarded just because they appear to be outliers, but may be discarded if they satisfy statistical criteria for testing outliers. The analyst must record any discarded data as well as a brief summary of the investigation in the laboratory's records.

10. If the multipoint calibration data and the assay data underwent any mathematical transformations before their statistical analysis, the analyst must perform to reverse transformations for the estimated concentration and the 95-percent uncertainty. Record the transformed values in the laboratory's records.

11. Finally, calculate the certified permeation rate (in nanograms/minute) and uncertainty for the candidate standard using the equations below:

$$\text{Certified Permeation Rate} = \left[10^3\right]\left[\frac{MW}{MV}\right]\left[\begin{matrix}\text{Diluted Standard}\\ \text{Conc.}\end{matrix}\right]\left[\begin{matrix}\text{Dilution Flow}\\ \text{Rate}\end{matrix}\right].$$

$$\text{Uncertainty of Permeation Rate} = \left[10^3\right]\left[\frac{MW}{MV}\right]\left[\begin{matrix}\text{95-Percent}\\ \text{Uncertainty}\end{matrix}\right]\left[\begin{matrix}\text{Dilution Flow}\\ \text{Rate}\end{matrix}\right].$$

3.2.10 Equilibration Test for Newly Prepared Permeation Devices

A permeation device that has not been previously assayed must be tested for a stable permeation rate as follows: Reassay the permeation rate at least 24 hours after the first assay and compare the two assayed concentrations. The spreadsheet described in Appendix C or equivalent statistical techniques must be used to evaluate the stability of the permeation rate by comparison of the confidence limits from the two assays. If the confidence intervals overlap, the permeation rate can be considered to be stable and the candidate standard may be certified for use. Otherwise, equilibrate the device longer at the operating temperature and repeat the test, using the second and third assays as if they were the first and second. This process may be repeated until the rate stabilizes. Permeation devices that are not stable may not be used for calibration or audit purposes. Candidate standards that fail the initial and the repeat stability tests are unstable and are disqualified for further use under this protocol.

3.2. Certification Documentation

See Subsections 3.1.5 and 3.1.6.

3.2.12 Recertification Requirements

See Subsection 3.1.7.3.

3.3 PROCEDURE P2: ASSAY AND CERTIFICATION OF PERMEATION DEVICE CALIBRATION STANDARDS REFERENCED TO A COMPRESSED GAS REFERENCE STANDARD

3.3.1 Applicability

This procedure may be used to assay the permeation rate of a candidate SO_2 and NO_2 permeation device calibration standard, based on the concentration of a compressed gas reference standard of the same pollutant compound, and to certify that the assayed permeation rate is traceable to the reference standard. The procedure employs a low-concentration range (i.e., ambient air quality level) pollutant gas analyzer to compare quantitatively diluted concentrations from the permeation device calibration standard with quantitatively diluted concentrations from the compressed gas reference standard. This procedure may be used for the assay of multiple candidate standards during the same assay session. Criteria that apply to the assay of one candidate standard apply to the assay of multiple candidate standards. This procedure may be used by permeation device producers, standard users or other analytical laboratories.

3.3.2 Limitations

1. The concentration of the diluted candidate standard may be greater than or less than the concentration of the diluted reference standard. However, the diluted concentrations from both standards must lie within the well-characterized region of the analyzer's calibration curve (see Subsection 2.1.7.2). Additionally, the 95-percent uncertainty for the regression-predicted concentration of the diluted candidate standard must be $\leq$1.0 percent of the concentration of the diluted reference standard. This uncertainty is obtained from the statistical analysis of the multipoint calibration data using the spreadsheet described in Appendix A or using equivalent statistical techniques (e.g., the worksheet for linear relationships given in Chapter 5 of Reference 15). This criterion means that the uncertainty associated with the multipoint calibration determines the concentration range over which a diluted candidate standard may be assayed.

2. A quantitatively accurate dilution and flow measurement system is required.

3. A source of clean, dry zero gas is required.

4. This procedure is designed to assay the permeation rate of a candidate standard that is mounted in a specially designed assay dilution system. The procedure does not accommodate the certification of a candidate standard that is mounted in its own self-contained dilution/flow measurement system.

3.3.3 Assay Apparatus

Figure 3-2 illustrates the components and configuration of one possible design for the assay apparatus, including a common dilution system for both the reference and candidate standards.

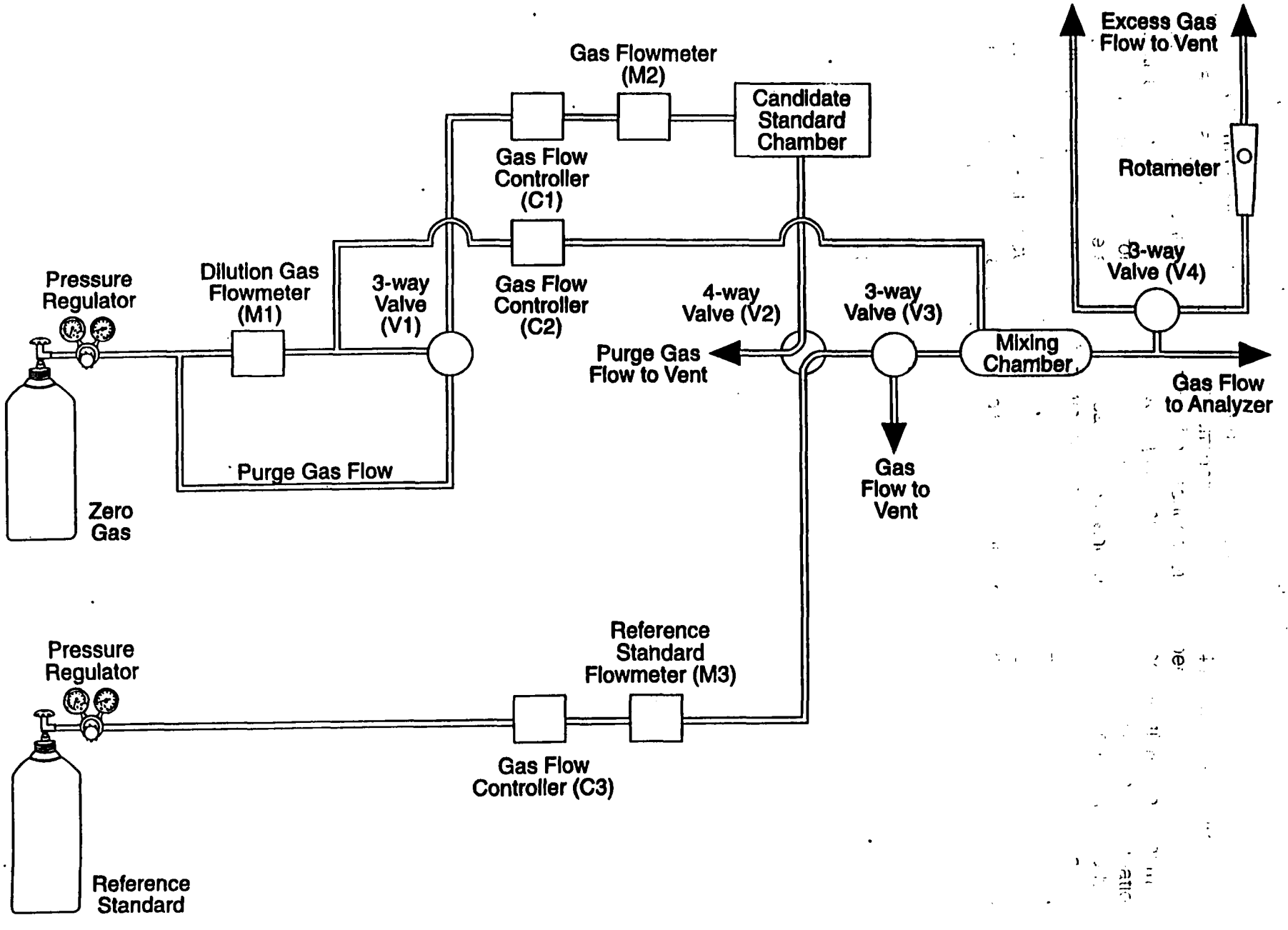

Figure 3-2. One possible design of the apparatus for the assay of permeation device calibration standards referenced to a compressed gas reference standard (Procedure P2).

The configuration is designed to allow convenient routing of zero gas and diluted concentrations of the reference standard and the candidate standard, in turn, to the analyzer for measurement, as selected by valves V1, V2, and V3. Three gas flow controllers (i.e., C1, C2, and C3) regulate the total dilution flow rate for the candidate standard, the purge gas flow rate, and the reference standard flow rate. These gas flow controllers may be needle valves, capillary tubes, thermal mass flow controllers, or other suitable devices. The flow rates should be controlled to within 1.0 percent variation during the assay. The dilution flow rates for the reference and candidate standards is measured by a single, common flowmeter (i.e., M1). The reference standard and purge gas flow rates may be measured at the vent port of valve V2 or by flowmeters M2 and M3 that are mounted in the two gas streams.

When the candidate standard is being measured, valve V1 directs a portion of the total dilution flow through the candidate standard chamber. This sweep flow rate is regulated by gas flow controller C1 and is measured by gas flowmeter M2. This flowmeter need not be accurately calibrated because only the total dilution flow rate, measured by flowmeter M1, is used in the dilution calculations. When the reference standard is being measured, valve V1 directs the purge gas through the candidate standard chamber. The purge gas prevents the buildup of high pollutant concentrations in the chamber. It is vented through valve V2 and is not measured by flowmeter M1.

The assay apparatus illustrated in Figure 3-2 may be modified by the addition of multiple candidate standard chambers. These chambers may be set to different temperatures.

If it is necessary to use different dilution flow rates for the reference standard and the candidate standard (see Subsection 3.2.6), separate flow controllers for the two dilution flow rates may be used. However, the same flowmeter should be used to measure both dilution flow rates to help reduce systematic flow measurement errors.

The mixing chamber combines the gas streams and should be designed to provide turbulence in the flow to ensure thorough mixing of the two gas streams. The diluted gas mixtures are routed to the analyzer through a union tee tube fitting, which vents excess gas flow. Normally, the excess gas is vented to the atmosphere without any obstructions in the tubing and the gas entering the analyzer is at near-atmospheric pressure. However, the excess gas can be routed through an uncalibrated rotameter by rotation of a three-way valve (i.e., V4). The rotameter is used to demonstrate that the total gas flow rate exceeds the sample flow rate of the analyzer and that no room air is being drawn in through the vent line (also see Subsection 3.1.4). Check the apparatus carefully for leaks and correct all leaks before use.

The mean temperature of the candidate standard chamber must be controlled to within 0.05 °C of the setpoint with a temperature stability of ±0.05 °C. This temperature must be measured with a NIST-traceable thermometer having a measurement uncertainty of not more than 0.05 °C.

3.3.4 Pollutant Gas Analyzer

See Subsection 2.3.4. The pollutant gas analyzer must have a well-characterized calibration curve and a range capable of measuring the diluted concentrations of both the candidate and reference standards. It must have good resolution, good precision, a stable response, and low output signal noise. In addition, the analyzer must have good specificity for the pollutant of interest so that it has no detectable response to any contaminant that may be contained in the standards.

A suitable analyzer with acceptable performance specifications may be selected from the list of EPA-designated reference and equivalent method analyzers.[17] If the balance gas of the reference standard must be different from the zero gas used for dilution (e.g., air versus nitrogen or different proportions of oxygen), either a high dilution ratio (i.e., at least 50 parts zero gas to 1 part standard) should be used, or the analyzer must be proven to be not sensitive to differences in the balance gas composition. The latter may be demonstrated by showing no difference in an analyzer's response when measuring a calibration standard that has been diluted with identical flow rates of the different balance gases.

The analyzer should be connected to a high-precision data acquisition system (e.g., a strip chart recorder) which must produce an electronic or paper record of the analyzer response during the assay. Additionally, a digital panel meter with four-digit resolution, a digital voltmeter, data logger, or other data acquisition system must be used to obtain numerical values of the analyzer's response. More precise values will be obtained if these instruments have some data averaging capability. The assay record must be maintained for 3 years after the standard's certification date.

If the analyzer has not been in continuous operation, turn it on and allow it to stabilize (e.g., for at least 12 hours) before beginning any measurements.

3.3.5 Analyzer Calibration

3.3.5.1 Multipoint Calibration—

See Subsections 2.1.7.2 and 2.1.7.4. Following completion of the multipoint calibration, the accuracy of the assay apparatus must be checked to verify that the error associated with the dilution is not excessive. This accuracy check involves the measurement of an undiluted or diluted check standard. The check standard must be a NIST SRM, an SRM-equivalent PRM, an NTRM, or a GMIS as specified in Subsection 2.1.2. It must have a certified concentration that is different from that of the reference standard used in the multipoint calibration. Information concerning this standard (e.g., cylinder identification number, certified concentration) must be recorded in the laboratory's records.

If an undiluted check standard is used, its concentration must fall in the well-characterized region of the calibration curve. If a diluted check standard is used, the diluted concentration must fall in the well-characterized region.

Make three or more discrete measurements of the undiluted or diluted check standard. "Discrete" means that the analyst must change the gas mixture being sampled by the analyzer between measurements. For example, the analyst might alternate between measurements of the check standard and the zero gas. Record these measurements in the laboratory's records.

Next the analyst must verify that the dilution error is not excessive. For the check standard measurements, calculate the relative difference (in percent) between the mean analyzer response and the corresponding response that is predicted from the multipoint calibration regression equation and the undiluted or diluted check standard concentration. That is,

$$\text{Relative Difference} \quad 100 \left[\frac{\text{Mean Analyzer Response} - \text{Predicted Response}}{\text{Predicted Response}} \right]$$

If the relative difference is >1.0 percent, the dilution error is considered to be excessive. The analyst must investigate why the relative difference is excessive. The program may be due to errors in the reference standard and check standard concentrations, errors in assay apparatus or to some other source. Assays may not be conducted until the relative difference for a subsequent accuracy check is ≤1.0 percent.

3.3.5.2 Analyzer Range—
See Subsection 2.3.5.2.

3.3.5.3 Linearity—
See Subsection 2.3.5.3.

3.3.5.4 Zero and Span Gas Checks—
See Subsection 2.3.5.4.

3.3.6 Selection of Gas Dilution Flow Rates

The dilution flow rates used for the reference standard and the candidate standard should be selected carefully to provide diluted concentrations for both standards that fall in the well-characterized region of the analyzer's calibration curve. Potential errors in the assayed permeation rate due to dilution flow rate measurement error will be reduced if the same dilution flow rates can be used for both the reference and candidate standards. This should be feasible by appropriate selection of the reference standard flow rate. Select a combination of reference standard flow rate and dilution flow rate that produces approximately equal diluted reference standard and candidate standard concentrations that fall in the well-characterized region of the analyzer's calibration curve. Additionally, the magnitude of the 95-percent confidence limits for the estimated concentration of the diluted candidate standard must be ≤±1 percent of the concentration of the diluted reference standard.

3.3.7 Flowmeter Type and Flowmeter Calibration

Flowmeters M1 and M3, shown in Figure 3-2, measure in-line flow rates and do not operate at atmospheric pressure because of backpressure from downstream components. Also, this backpressure is variable, depending on the total dilution and reference standard flow rates. Thus, the flowmeters must compensate for the variable in-line pressure. Thermal mass flowmeters do not need to be corrected for pressure effects. Measurements from pressure-sensitive flowmeters such as rotameters or wet test meters must be carefully corrected for the actual in-line pressure during the flow rate measurements.

Alternatively, the flow rates can be measured at the outlet of the dilution apparatus, with the excess gas flow vent temporarily plugged. In this case, a volume-type meter such as a wet test meter or a soap film flowmeter can be used, and flow measurements may be conveniently referenced to atmospheric pressure. Each flow rate must be measured independently while the other flow rate is set to zero. Great care must be exercised to ensure that each measured flow rate remains constant when combined with the other flow rate and between the time of measurement and the time of the assay.

The flowmeters used should be stable, repeatable, linear, and have good resolution. The flowmeters must not contaminate or react with the gas mixture passing through them. If possible,

select flow rates or flowmeter ranges such that the measured flow rates fall in the upper half of the flowmeters' ranges. The flowmeters should be carefully calibrated at several flow rates to prove linearity. The calibration of the zero gas flowmeter should be accurate to ±1.0 percent, referenced to an accurate flow or volume standard traceable to a NIST primary standard (see Subsection 3.1.2). This flowmeter calibration should be checked and recertified on a regular schedule (e.g., yearly). The recertification frequency is to be determined from stability information such as a chronological control chart of calibration data.

It is desirable to measure both dilution flow rates with the same flowmeter (i.e., M1). This practice reduces measurement errors associated with the use of multiple flowmeters. Note that the impact of any flow measurement error is reduced if the same dilution ratio can be used for both candidate standard and reference standard measurements.

All volumetric flow-rate measurements must be corrected or referenced to the same temperature and pressure conditions, such as EPA-standard conditions (i.e., 760 millimeters of mercury (mm Hg) and 25 °C) or the ambient temperature and pressure conditions prevailing in the laboratory during the assay. Measurements using wet test meters and soap bubble flowmeters also must be corrected for the saturation of the gas stream with water vapor in the moist interiors of these flowmeters. The equation to correct the flow rate for temperature, pressure, and humidity effects is given below:

$$\text{Flow Rate} = \frac{\text{Volume}}{\text{Time}} \left(\frac{P_M - P_{WV}}{P_S} \right) \left(\frac{T_S}{T_M} \right)$$

where

P_M = measured barometric pressure (mm Hg);
P_{WV} = partial pressure of water vapor (mm Hg);
P_S = standard pressure (mm Hg);
T_S = standard temperature (298.2 K); and
T_M = measured ambient temperature (273.2 + °C).

3.3.8 Candidate Standard

See Subsections 3.1.7 and 3.2.2. Follow the manufacturer's instructions for equilibration and for use of the candidate standard and for selecting the temperature at which it is to be assayed and certified. The candidate standard should be assayed at the same temperature at which it will be subsequently used. The mean operating temperature of the candidate standard chamber must be controlled to within 0.05 °C of the setpoint with a temperature stability of ±0.05 °C. This temperature must be measured with a NIST-traceable thermometer with a measurement uncertainty ±0.05 °C or less (see Subsection 3.1.2).

3.3.9 Reference Standard

See Subsections 2.1.2, 2.1.6.4, 2.3.2, 2.3.6, and 3.1.2.

3.3.10 Zero Gas

See Subsection 2.1.8. If possible, the zero gas should be the same as the balance gas of the reference standard.

3.3.11 Assay Procedure

1. Verify that the assay apparatus is properly configured as shown in Figure 3-2 and described in Subsection 3.3.3. Inspect the analyzer to verify that it appears to be operating normally and that all controls are set to their expected values. Record these control values in the laboratory's records.

2. Determine and establish the operating temperature for the candidate standard in its temperature-controlled chamber. Install the candidate standard, start the purge gas flow, and allow ample time for the device to equilibrate (see Subsection 3.1.7.2). Record the temperature in the laboratory's records.

3. Verify that the flowmeters are properly calibrated (see Subsection 3.3.7).

4. Verify that a multipoint calibration of the analyzer has been performed within 1 month prior to the assay date (see Subsections 2.1.7.2, 2.1.7.5, and 2.3.4). Additionally, verify that the zero and span gas checks indicate that the analyzer is in calibration (see Subsection 2.3.5.4).

5. Determine and establish the reference standard flow rate and the dilution flow rates and diluted concentrations for the reference standard and the candidate standard that will be used for the assay (see Subsections 2.3.5.2 and 3.3.6). Ensure that the diluted reference standard and diluted candidate standards concentrations are within the well-characterized region of the analyzer's calibration curve (see Subsection 2.3.2). Also check that both dilution flow rates will provide enough flow for the analyzer, with sufficient excess to ensure that no ambient air will be drawn into the vent line. If possible, use the same dilution flow rate for both the reference standard and the candidate standard. Also adjust the flow rate of the portion of the dilution flow that passes over the candidate standard (i.e., flow controller C3), and adjust the purge flow rate (i.e., flow controller C2) to approximately the same value.

$$\text{Diluted Standard Conc.} = \left[\frac{(\text{Undiluted Standard Conc.})\ (\text{Standard Flow Rate})}{(\text{Standard Flow Rate} + \text{Zero Gas Flow Rate})}\right].$$

Calculate the diluted reference standard concentration using the following equation:
Calculate the diluted candidate standard concentration (in ppm) using the following equation:

$$\text{Diluted Standard Conc.} = \left[10^{-3}\right]\left[\frac{MV}{MW}\right]\left[\frac{\text{Permeation Rate}}{\text{Dilution Flow Rate}}\right]$$

where

MV = Molar volume of the dilution gas (liters/mole);

= (0.08206) T_m

MW = Molecular weight of the dilution gas (grams/mole); permeation rate is given in nanograms/minute; and dilution flow rate is given in liters/minute.

Use an estimated permeation rate for the candidate standard in this calculation.

Record the measured flow rates and the undiluted and diluted reference standard concentrations in the laboratory's records.

6. In succession, measure the zero gas, the diluted reference standard and the diluted candidate standard using the analyzer. Use valves V1, V2, and V3 to select each of the three gas mixtures for measurement. For each measurement, adjust the flow rates, if necessary, to those determined in step 5, and allow ample time for the analyzer to achieve a stable reading. If the reading for each measurement is not stable, the precision of the measurements will decline and the candidate standard might not be certifiable under this protocol. Record the analyzer response for each measurement, using the same response units (e.g., volts, millivolts, percent of scale, etc.) as was used for the multipoint calibration. At this point, do not convert the data into concentration values using the calibration equation. Do not perform any mathematical transformations of the data. These steps will be done later. Do not make any zero control, span control, or other adjustments to the analyzer during this set of measurements. Record these analyzer responses in the laboratory's records.

   The analyst may assay multiple candidate standards during the same assay session. For example, a single set of measurements may involve a zero gas, a diluted reference standard, and three diluted candidate standards. Criteria that apply to the assay of one candidate standard apply to the assay of multiple candidate standards. The analyst should be aware that the effect of any short-term calibration drift will be greater when multiple candidate standards are assayed. This greater effect is due to the longer period of time between reference standard measurements. Unacceptable uncertainties of the estimated concentrations for the diluted candidate standards may occur as a result of the longer assay session.

7. Conduct at least two additional sets of measurements, as described in step 6 above. However, for these subsequent sets of measurements, change the order of the three measurements (e.g., measure the reference standard, zero gas, and candidate standard for the second set and measure the zero gas, candidate standard, and reference standard for the third set, etc.). Changing the order that the gas mixtures are measured helps the analyst to discover any effect that one measurement has on subsequent measurements. The number of sets of measurements will have been determined during the analysis of the multipoint calibration data such that the 95-percent uncertainty of the regression-predicted concentration of the candidate standard ≤ 1 percent of the concentration of the reference standard.

8. If any one or more of the measurements of a set of measurements is invalid or abnormal for any reason, discard all three measurements and repeat the set of measurements. Such measurements may be discarded if the analyst can demonstrate that the experimental conditions were inappropriate during these measurements. Data cannot be discarded just because they appear to be outliers, but may be discarded if they satisfy statistical criteria for testing outliers.[16] The analyst must record any discarded data and a brief explanation about why the data were discarded in the laboratory's records.

9. The spreadsheet described in Appendix A or equivalent statistical techniques must be used to calculate an estimated concentration and a 95-percent uncertainty for the diluted candidate standard based on data from the assay measurements and from the multipoint calibration. The use of both sets of data in the statistical analysis produces an estimated concentration with smaller uncertainty while correcting for any minor calibration drift that may have occurred since the multipoint calibration. Record the estimated concentration and the 95-percent uncertainty in the laboratory's records.

   The spreadsheet also calculated the percentage of the uncertainty that is due to the multipoint calibration. This percentage is needed for the total uncertainty calculations when two or more assays fall under the same multipoint calibration. Record this value in the laboratory's records.

   The analyst should investigate any of the measurements that appear to be outliers. Such data may be discarded if the analyst can demonstrate that the experimental conditions were inappropriate during these measurements. Data cannot be discarded just because they appear to be outliers, but may be discarded if they satisfy statistical criteria for testing outliers. The analyst must record any discarded as well as a brief summary of the investigation in the laboratory's records.

10. If the multipoint calibration data and the assay data underwent any mathematical transformations before their statistical analysis, the analyst must perform to reverse transformations for the estimated concentration and the 95-percent uncertainty. Record the transformed values in the laboratory's records.

11. Finally, calculate the certified permeation rate (in nanograms/minute) and uncertainty for the candidate standard using the equations below:

$$\text{Certified Permeation Rate} = \left[10^3\right]\left[\frac{MW}{MV}\right]\left[\begin{matrix}\text{Diluted Standard}\\ \text{Conc.}\end{matrix}\right]\left[\begin{matrix}\text{Dilution Flow}\\ \text{Rate}\end{matrix}\right]$$

$$\text{Uncertainty of Permeation Rate} = \left[10^3\right]\left[\frac{MW}{MV}\right]\left[\begin{matrix}\text{95-Percent}\\ \text{Uncertainty}\end{matrix}\right]\left[\begin{matrix}\text{Dilution Flow}\\ \text{Rate}\end{matrix}\right].$$

3.3.12 Equilibration Test for Newly Prepared Permeation Devices

A permeation device that has not been previously assayed must be tested for a stable permeation rate as follows: Reassay the permeation rate at least 24 hours after the first assay and compare the two assayed concentrations. The spreadsheet described in Appendix C or equivalent statistical techniques must be used to evaluate the stability of the permeation rate by comparison of the confidence limits from the two assays. If the confidence intervals overlap, the permeation rate can be considered to be stable and the candidate standard may be certified for use. Otherwise, equilibrate the device longer at the operating temperature and repeat the test, using the second and third assays as if they were the first and second. This process may be repeated until the rate stabilizes. Permeation devices that are not stable may not be used for calibration or audit purposes. Candidate standards that fail the initial and the repeat stability tests are unstable and are disqualified for further use under this protocol.

3.3.13 Certification Documentation

See Subsections 3.1.5 and 3.1.6.

3.3.14 Recertification Requirements

See Subsection 3.1.7.3.

3.4 PROCEDURE P3: ASSAY AND CERTIFICATION OF PERMEATION DEVICE CALIBRATION STANDARDS REFERENCED TO A MASS REFERENCE STANDARD

3.4.1 Applicability

This procedure may be used to assay the permeation rate of a candidate SO_2 or NO_2 permeation device calibration standard based on mass reference standards, and to certify that the assayed permeation rate is traceable to the reference standard. The procedure employs an analytical balance to measure the weight loss in the candidate standard. It may be used for the assay of multiple candidate standards during the same assay session. Criteria that apply to the assay of one candidate standard apply to the assay of multiple candidate standards. This procedure may be used by permeation device producers, standard users, or other analytical laboratories.

3.4.2 Limitations

1. This procedure is intended only for the assay of candidate standards containing SO_2 or NO_2. These liquid compounds must be anhydrous grade (minimum purity 99.99 percent) or phosphorous pentoxide-dried commercial purity grade (minimum purity 99.5 percent).

2. An accurate analytical balance with a NIST-traceable calibration is required to weigh the candidate standard.

3. A temperature-controlled chamber for maintaining the candidate standard at a constant, NIST-traceable temperature between weight measurements is required.

4. A source of clean, dry zero gas is required.

3.4.3 Assay Apparatus

3.4.3.1 Analytical Balance—

Choose a balance with adequate vibration-stabilization control and appropriate specifications for total weighing capacity, accuracy, precision, and readability. The balance should be chosen such that the manufacturer's specified uncertainty (i.e., three times the standard deviation or "reproducibility") of the balance divided by the weight of the candidate standard does not exceed 0.001. The balance must be calibrated annually using NIST-traceable mass reference standards by the manufacturer or a manufacturer's representative (see Subsection 3.1.2).

If possible, locate the balance in a climate-controlled, draft-free room, preferably dedicated to the use of balances. If this is not possible, the general guidelines listed below should be followed to control environmental factors that may affect balance performance:

- Locate the balance away from potential sources of drafts such as doors, windows, aisles with frequent traffic, ventilation ducts, and equipment with fans or moving parts.

- Locate the balance out of direct sunlight and away from local heating or cooling sources such as open flames, hot plates, water baths, ventilation ducts, windows, and heat-producing lamps.

- Locate the balance on a sturdy base (ideally, a stone weighing table) and away from any equipment that produces vibrations. If this is not possible, isolate the balance from such equipment by placing a stabilizing slab under the balance or composite damping-pads under the balance legs.

- Ensure that the balance-support is sufficiently level to permit leveling of the balance according to the manufacturer's instructions.

3.4.3.2 Temperature-Controlled Chamber—

A temperature-controlled chamber is required for storing the candidate standard between weighings. One possible design for the chamber is depicted in Figure 3-3.[23] Clean, dry zero gas enters the chamber at the bottom after passing through the heat exchanger tubing (i.e., several turns of copper tubing). The zero gas' flow rate must be sufficient to purge the chamber thoroughly. The chamber and the heat exchanger are immersed in a thermostatted bath to the level shown in the figure. The bath must control the mean temperature of the chamber to within 0.05 °C of the setpoint with a temperature stability of ±0.05 °C. The temperature of the bath or the chamber must be measured and recorded in the laboratory's records on at least a daily basis. A NIST-traceable, liquid-in-glass thermometer or a temperature-sensing device must be used for this measurement (see Subsection 3.1.2). A temperature-sensing device must be calibrated annually using NIST-traceable temperature reference standards and must have an uncertainty similar to that of these reference standards. The output of a temperature-sensing device may be recorded by a strip chart recorder, data logger, or other data acquisition system.

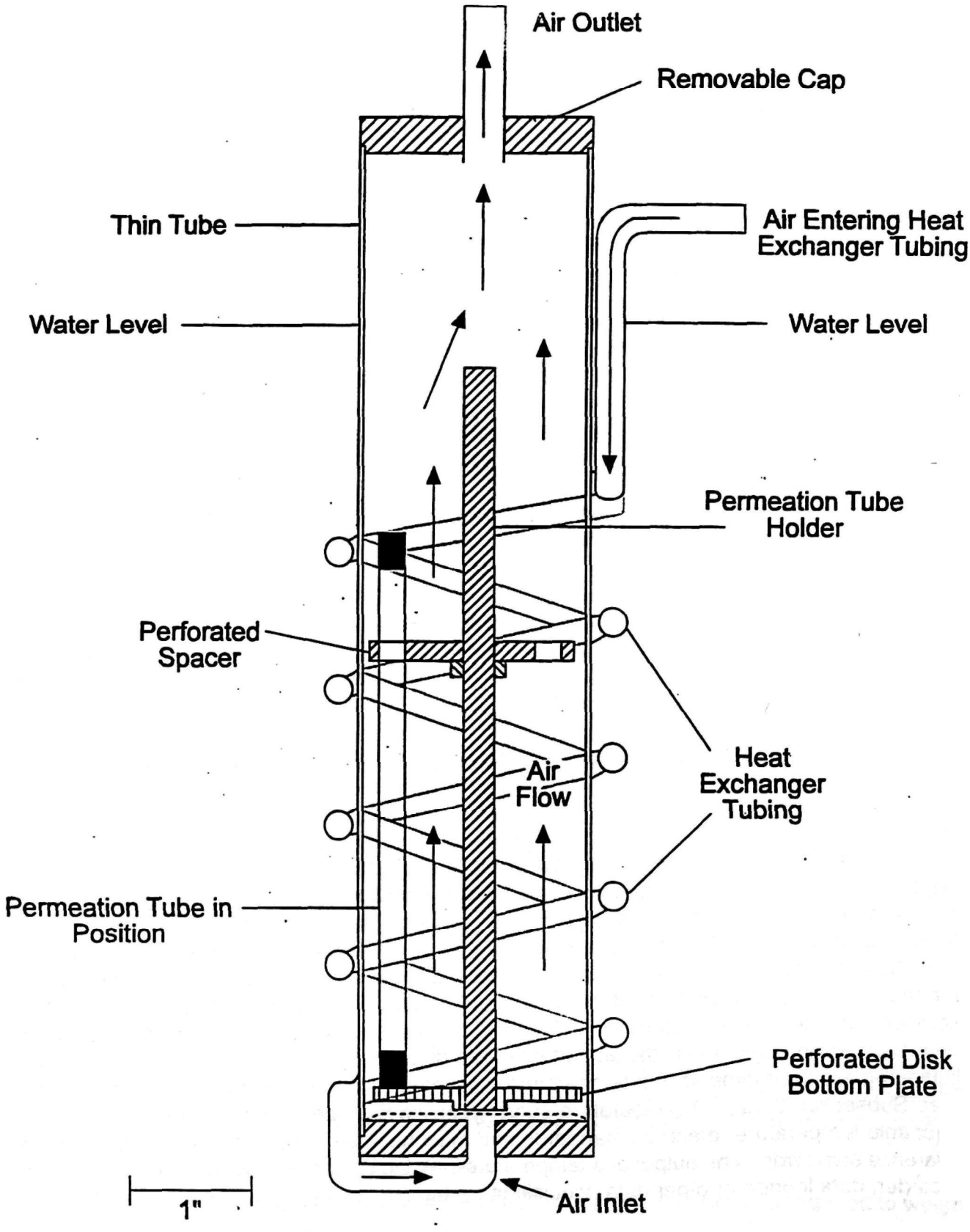

Figure 3-3. Chamber for maintaining permeation tubes at constant temperature.[23]

3.4.3.3 Electrostatic Charge Neutralization—

Electrostatic charge buildup will prevent an analytical balance from operating properly. Static charge is the accumulation of electrical charges on the surface of a nonconductive material, which could be the permeation device or part of the analytical balance. Common symptoms of this problem include noisy readout, drift, and sudden readout shifts.

To reduce static charge within the balance, it may be necessary to place a radioactive antistatic strip containing a very small amount (i.e., 500 picocuries) of Polonium-210 (Po^{210}) in the weighing chamber. It may also be necessary to put each permeation device on an antistatic strip before it is weighed. Po^{210} antistatic strips are used to reduce electrostatic buildup in the analytical balance's weighing chamber and on individual permeation devices by charge neutralization. They will neutralize electrostatic charges on items placed within an inch of them. These antistatic strips are safe, commonly available, and very inexpensive. Po^{210} has a half-life of 138 days. Change the antistatic strips semiannually and dispose of the old strips according to the manufacturer's recommendations.

Antistatic solutions are available for coating (and recoating at appropriate and relatively infrequent intervals) the interior and exterior nonmetallic surfaces of the chamber. This coating facilitates the draining of electrostatic charges from these surfaces to a common electrical ground to which the metallic conductive surfaces are connected. Earth-grounded conductive mats placed on the weighing table surface and under the analyst's shoes are used to reduce electrostatic charge buildup. Do not assume that the electrical grounding of the analytical balance eliminates all electrostatic buildup because the ground may not be perfect.

Even though a permeation device's weight might stabilize within 60 seconds and no weight drift is observed during that period, the balance may still be influenced by electrostatic charge buildup. It may still be necessary to repeat the neutralization procedure and to use antistatic strips inside the weighing chamber. One may reduce the effect of electrostatic buildup on permeation devices by putting them in an aluminum foil boat on the balance pan during weighings.

Charge neutralization times may need to be longer than 60 seconds. Electrostatic charge buildup becomes greater as the air becomes drier. A 60-second neutralization may work sufficiently in ambient indoor air conditioned to 37 percent relative humidity and 23°C, but not in zero nitrogen. This latter environment may require that the permeation device sit for more time on the antistatic strip. The longer neutralization period may have to be done inside the weighing chamber or a second small chamber, which is used just for charge neutralization.

3.4.4 Weighing Interval

The minimum time period between weighings of the candidate standard is a function of the expected permeation rate, the specified uncertainty for the rate, and the analytical balance's readability (i.e., the smallest scale division). The following equation is based on a ±1 percent uncertainty specification for the permeation rate:

$$\text{Minimum Weighing Interval} = \frac{100\ (\text{Readability})}{(\text{Expected Permeation Rate})}$$

where the weighing interval is in minutes; the readability is in grams; and the expected permeation rate is in grams per minute.

3.4.5 Assay Procedure

1. Turn on the balance and allow it to warm up for the period specified in the operator's manual. To ensure maximum stability, it is recommended to keep the balance turned on at all times. This procedure enables the balance to be operational at all times and eliminates the need for a warmup period before analyses. Newer balances are always turned on (except for their displays) when they are plugged in.

2. Check the balance level and, if necessary, adjust the level according to the manufacturer's instructions.

3. Ensure that the balance room temperature is within 15 to 30 °C or, if given, within the balance manufacturer's specifications and that the balance and mass reference standards are equilibrated to the balance room temperature. Record the temperature in the laboratory's records.

4. Zero (i.e., tare) and calibrate the balance according to the manufacturer's directions. Record the tare reading in the laboratory's records. Many newer balances calibrate themselves automatically or only require a key to be touched to calibrate themselves.

5. On each day that the candidate standard is to be assayed, verify the balance's calibration using at least two NIST-traceable mass reference standards. Use smooth, nonmetallic forceps to handle the standards. This standard must have a mass that is similar to that of the candidate standard. Record the date, balance identification, standards identification, certified weight of the standard, and the measured weight of the standard in the laboratory's records. Calculate the relative difference (in percent) between the certified and measured weights as follows:

$$\text{Relative Difference} \quad \frac{100\ (\text{Measured Weight} - \text{Certified Weight})}{(\text{Certified Weight})}$$

   Record the relative difference in the laboratory's records. If the relative difference is >0.1 percent, the balance cannot be used under this protocol until it has been recalibrated or repaired and until a subsequent verification has a relative difference of ≤0.1 percent.

6. Review the recorded bath or chamber temperature readings since the most recent weighing of the candidate standard, or since the standard was first put into the temperature-controlled chamber. Record the minimum and maximum temperatures in the laboratory's records. The minimum and maximum temperatures must not have deviated from the setpoint by more than 0.1 °C. If these temperatures deviate by more than this amount, the current assay and all previous assays are invalidated.

7. Record the current bath or chamber temperature in the laboratory's records.

8. Verify that the candidate standard has been in the temperature-controlled chamber for a long enough time for its permeation rate to have stabilized.

9. Remove the candidate standard from the temperature-controlled chamber and place it on the balance's pan using stainless steel forceps or a similar noncontaminating device. Note that Teflon® permeation tubes may have an electrostatic charge buildup due to the passage of the dry gas over them between weighings. Such charges should be removed from the candidate standard before weighing by Po^{210} antistatic strips or similar devices. Note that electronic force balances may require that candidate standards be thermally equilibrated before they can be weighed.

10. Record the date, time and the candidate standard's identification number and current weight in the laboratory's records.

11. Return the candidate standard to the temperature-controlled chamber. The standard should be outside the chamber only for a long enough time to weigh it using reasonable laboratory technique.

3.4.6 Number of Weighings of the Candidate Standard

The candidate standard must be weighed at least six times after its permeation rate has stabilized at the certification temperature. After the six or more weighings, the analyst may assess the stability and uncertainty of the permeation rate by using the spreadsheet described in Appendix B or equivalent statistical or graphic techniques. The analyst may calculate a provisional permeation rate from the measured weights and the time between weighings using the following equation:

$$\text{Provisional Permeation Rate} = \frac{\text{(Previous Weight - Current Weight)}}{\text{Elapsed Time Between Weighings}}$$

Based on this data analysis, the analyst may perform additional weighings to reduce the uncertainty or to replace data that are discarded because they were obtained before the permeation rate stabilized.

3.4.7 Calculation of Certified Permeation Rate

The certified permeation rate for the candidate standard is the slope of the least squares regression line for data from at least six weighings of the candidate standard after the permeation rate has stabilized. This statistical analysis technique produces permeation rate estimates that are more precise than those calculated from weight differences between individual weighings. Although the minimum number of weighings is six, more precise estimates will be obtained for more weighings.

Calculate the certified permeation rate and its uncertainty using the spreadsheet given in Appendix B or using equivalent statistical techniques (e.g., the worksheet for linear relationships given in Chapter 5 of Reference 15). Figure 3-4 presents an example of the graphic output of the spreadsheet. This rate is the slope (b_1) of the least squares regression line where the x-values are the elapsed times from the initial weighing and the y-values are the measured weights of the permeation device. The spreadsheet also calculates the predicted initial weight (b_0) of the permeation device and 95-percent confidence limits for b_0 and b_1.

After the data from the six or more weighings have been entered in the spreadsheet, examine the 95-percent confidence limits (CLs) for b_0. If the measured weight from the initial weighing falls outside of these limits, the permeation device may not have been completely equilibrated at the initial weighing. The analyst may elect to discard the data from the initial weighing to reduce the uncertainty of the certified permeation rate.

Examine the upper and lower 95-percent CLs for b_1. They should differ from b_1 by no more than 1 percent of its value. That is,

$$\text{upper CL}(b_1) - b_1 \leq (b_1)/100 \ .$$

$$b_1 - \text{lower CL}(b_1) - b_1 \leq (b_1)/100 \ .$$

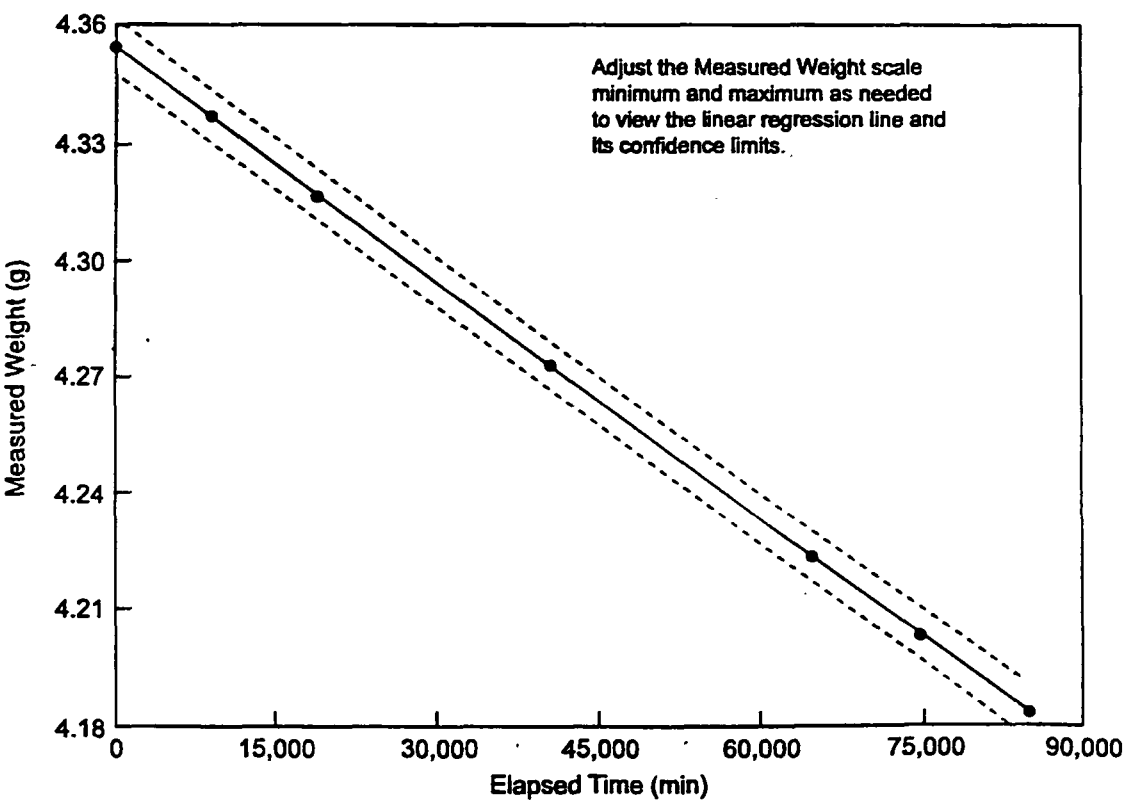

Figure 3-4. Example of spreadsheet graphic output for calculating permeation rates.

If these two criteria are met, the permeation device can be certified with a permeation rate equal to b_1 and an uncertainty equal to the larger of the two values. If the criteria are not met, the analyst must make additional weighings of the candidate standard as described in Subsection 3.4.5. These additional measurements will be pooled with the previously collected measurements. The pooled data will be used to obtain new estimates of the b_1 and its uncertainty. When an acceptable value for the uncertainty is obtained, record it and the slope in the laboratory's records. If an acceptable value is not obtained, the candidate standard cannot be certified under this protocol.

The analyst should investigate any of the measurements that appear to be outliers. Such data may be discarded if the analyst can demonstrate that the experimental conditions were inappropriate during these measurements. Data cannot be discarded just because they appear to be outliers but may be discarded if they satisfy statistical criteria for testing outliers. The analyst must record any discarded data and a brief summary of the investigation in the laboratory's records.

3.4.8 Uncertainty of Certified Permeation Rate for Candidate Standard

The total analytical uncertainty of the certified permeation rate includes the uncertainty of regression slope and the uncertainty of the mass reference standard that was used to verify the balance's calibration. The two components are combined using the following equation for the propagation of errors:

$$\frac{\text{Uncertainty (Total)}}{\text{Permeation Rate}} = \left[\left(\frac{\text{Uncertainty (Slope)}}{\text{Slope}}\right)^2 + \left(\frac{\text{Uncertainty (Mass)}}{\text{Mass}}\right)^2\right]^{1/2}$$

3.4.9 Certification Documentation

See Subsections 3.1.5 and 3.1.6.

3.4.10 Recertification Requirements

See Subsection 3.1.7.3.

SECTION 4

REFERENCES

1. U.S. Environmental Protection Agency. *Quality Assurance Handbook for Air Pollution Measurement Systems, Volume II. Ambient Air Specific Methods.* EPA-600/4-77-027a, 1977.

2. U.S. Environmental Protection Agency. *Quality Assurance Handbook for Air Pollution Measurement Systems, Volume III. Stationary Source Specific Methods.* EPA-600/4-77-027b, 1977.

3. U.S. Environmental Protection Agency. *Code of Federal Regulations.* Title 40, Chapter I, Subchapter C, Part 50. "National Primary and Secondary Ambient Air Quality Standards." Washington, DC. Office of the Federal Register. July 1, 1993.

4. U.S. Environmental Protection Agency. *Code of Federal Regulations.* Title 40, Chapter I, Subchapter C, Part 58. "Ambient Air Quality Surveillance." Washington, DC. Office of the Federal Register. July 1, 1993.

5. U.S. Environmental Protection Agency. *Code of Federal Regulations.* Title 40, Chapter I, Subchapter C, Part 60. "Standards of Performance for New Stationary Sources." Washington, DC. Office of the Federal Register. July 1, 1993.

6. U.S. Environmental Protection Agency. *Code of Federal Regulations.* Title 40, Chapter I, Subchapter C, Part 75. "Continuous Emission Monitoring." Washington, DC. Office of the Federal Register. July 1, 1993.

7. F.R. Guenther, W.D. Dorko, W.R. Miller, and G.C. Rhoderick. The NIST Traceable Reference Program for Gas Standards. National Institute of Standards and Technology. Special Publication 260-126. 1996. 40 pp.

8. Nederlands Meetinstituut. Gaseous Primary Reference Materials. Delft, The Netherlands, no date. 12 pp.

9. B.N. Taylor and C.E. Kuyatt. Guidelines for Evaluating and Expressing the Uncertainty of NIST Measurement Results: 1994 Edition. National Institute of Standards and Technology. Technical Note 1297. 1994. Current edition available from NIST Calibration Program, Building 820, Room 232, Gaithersburg, MD 20899, (301) 975-2002.

10. G.L. Harris. State Weights and Measures Laboratories: State Standards Program Description. National Institute of Standards and Technology. Special Publication 791. 1994. 130 pp.

11. V.R. White. National Voluntary Laboratory Accreditation Program: 1997 Directory. National Institute of Standards and Technology. Special Publication 810. 1997. 225 pp.

12. R.C. Shores, F. Smith, and D.J. von Lehmden. "Stability Evaluation of Sulfur Dioxide, Nitric Oxide and Carbon Monoxide Gases in Cylinders." EPA/600/4-86, U.S. Environmental Protection Agency, Research Triangle Park, NC. 1984. 52 pp.

13. S.G. Wechter. "Preparation of Stable Pollution Gas Standards Using Treated Aluminum Cylinders." In *Calibration in Air Monitoring*, ASTM STP 598, American Society for Testing and Materials. Philadelphia, PA. 1976. pp. 40-54.

14. National Council of the Paper Industry for Air and Stream Improvement, Inc. "An Investigation of the Stability of H_2S in Air Cylinder Gases." NCASI Special Report No. 90-09, New York, NY. 1990. 13 pp.

15. M.G. Natrella. Experimental Statistics, National Bureau of Standards Handbook No. 91, U.S. Government Printing Office. Washington, DC. 1963. pp. 5-1 to 5-46.

16. American Society for Testing and Materials. Standard Practice for Dealing with Outlying Observations. ASTM Standard Practice E 178-80, 1980.

17. U.S. Environmental Protection Agency. List of Designated Reference and Equivalent Methods. Current edition available from U.S. Environmental Protection Agency, National Exposure Research Laboratory, Mail Code MD-77, Research Triangle Park, NC 27711, (919) 541-2622 or from the Ambient Monitoring Technology Information Center (AMTIC) at http://www.epa.gov/ttn.

18. American National Standards Institute (ANSI) and American Society for Testing and Materials (ASTM). Standard Specification for Laboratory Weights and Precision Mass Standards. ANSI/ASTM Standard E 617-91, 1991.

19. W. Kupper. "High Accuracy Mass Measurements, From Micrograms to Tons," *Instrument Society of America Transactions*. 29(4). 1990.

20. G. Harris. "Ensuring Accuracy and Traceability of Weighing Instruments," *ASTM Standardization News*. 21(4):44-51. 1993.

21. J.A. Wise. NIST Measurement Services: Liquid-in-Glass Thermometer Calibration Service. National Institute of Standards and Technology Special Publication 250-23. 1988.

22. J.A. Wise. A Procedure for the Effective Recalibration of Liquid-in-Glass Thermometers. National Institute of Standards and Technology Special Publication 819. 1991.

23. E.E. Hughes et al. "Performance of a Nitrogen Dioxide Permeation Device." *Analytical Chemistry*. 49(12):1823-1829. 1977.

24. W.J. Mitchell et al. "Simple Systems for Calibrating and Auditing SO_2 Monitors at Remote Sites." *Atmospheric Environment*. 26A(1):191-194. 1992.

25. F.P. Scaringelli et al. "Preparation of Known Concentrations of Gases and Vapors with Permeation Devices Calibrated Gravimetrically." *Analytical Chemistry*. 42(8):871-876. 1970.

26. D.L. Williams. "Permeation Tube Equilibration Times and Long-Term Stability." *Calibration in Air Monitoring*. ASTM Publication STP 598. American Society for Testing and Materials. 1976. pp. 183-197.

APPENDIX A: INSTRUCTIONS FOR CALIBRATION WORKBOOK

1. ReadMe Spreadsheet

Purpose

This worksheet supports linear, quadratic, cubic, and quartic models:

Linear: $y = \beta_0 + \beta_1 x + \epsilon$
Quadratic: $y = \beta_0 + \beta_1 x + \beta_2 x^2 + \epsilon$
Cubic: $y = \beta_0 + \beta_1 x + \beta_2 x^2 + \beta_3 x^3 + \epsilon$
Quartic: $y = \beta_0 + \beta_1 x + \beta_2 x^2 + \beta_3 x^3 + \beta_4 x^4 + \epsilon$
y = response
x = concentration

The worksheet estimates the coefficients (βs) and the variance of the error term, ε. The workbook then performs the following functions:

- determine which model (linear, quadratic, etc.) is better
- determine the replication of unknowns needed for uncertainty control
- determine whether zero and span responses are acceptable
- estimate the concentration and 95% uncertainty of candidate standards analyzed on the same day as the initial calibration or a subsequent day.

Organization

The workbook consists of several worksheets, which are displayed as tabs at the bottom of the screen. The functions of these worksheets are described below:

ReadMe	describes the workbook, explaining how to use the worksheets
Measurement Data	allows for user input of calibration and other analytical data and includes statistical calculations for polynomial regression
Curves 1	displays the calibration data, the best-fit line, and its confidence bands
Residuals 1	displays the difference between the observed responses and those estimated by the best-fit calibration line
Curves 2	displays the calibration data, the best-fit quadratic curve, and its confidence bands
Residuals 2	displays the difference between the observed responses and those estimated by the quadratic regression line
Curves 3	displays the calibration data, the best-fit cubic curve, and its confidence bands
Residuals 3	displays the difference between the observed responses and those estimated by the best fit cubic regression line
Curves 4	displays the calibration data, the best-fit cubic curve, and its confidence bands
Residuals 4	displays the difference between the observed responses and those estimated by the best-fit quartic regression line

Chart Data includes the data used to create the Curves and Residuals charts.

Conventions

The **Measurement Data** worksheet includes instructions that guide the user through the steps in its use. The worksheet is also color coded to simplify use. Shaded cells that are bordered in blue lines are for input of data. These cells are unprotected, but all other cells of the **Measurement Data** worksheet are protected. The only other unprotected cell in the workbook is cell **F4** of the **Chart Data** worksheet. That cell controls the width of the confidence bands plotted in the **Curves 1** and **Curves 2** charts.

Derived values and statements are colored red. These cells contain formulas and are protected to prevent alteration.

Spreadsheet background colors indicate the order of the polynomial supported by the calculations in the area.

Light green is used for the linear model.
Yellow is used for the quadratic model.
Gray is used for the cubic model
Light blue is used for the quartic model.

Use

The Measurement Data worksheet guides the user through six steps.

STEP 1 Enter Calibration Data

In this step, up to 50 calibration points may be entered. Each calibration point has two parts–the certified concentration of the calibration gas standard and the instrument response when testing the standard. These values are entered in two columns. The spreadsheet performs computations in columns I through P (linear), Q through X (quadratic), Y through AZ (cubic), and BA and above (quartic).

STEP 2 Review the Parameter Estimates

In this step, the user reviews the estimates of the intercepts (b_0), slopes (b_1) and other coefficients (b_2, b_3, and b_4) for the four models, examines their confidence intervals and the residual error variances (s^2). The result of an F test indicates which of the models is best. The linear model is recommended unless the quadratic or higher-order model significantly reduces the residual error.

STEP 3 Review the Charts

In this step, the user reviews the charts named **Curves 1**, **Residuals 1**, **Curves 2**, **Residuals 2**, etc. These charts help the user understand why one model performs better than the other.

STEP 4 Assess Magnitude of Uncertainty

In this step, the user enters the assumed concentration of a candidate standard and selects a replication number, r. Based on the calibration results, the worksheet estimates the 95% uncertainty that would result from measuring such a standard r times. The user can use this as a guide for deciding whether to proceed with analysis, to produce additional calibration points, or to take some corrective action.

STEP 5 Assay Candidate Standard on Same Day

In this step, the user enters the responses to a candidate standard that is tested on the same day as the calibration of STEP 1. The worksheet provides an estimate of the candidate's concentration and its 95% uncertainty. The worksheet also indicates whether the variability in responses is larger than expected (unacceptable).

STEP 6 Assay Candidate Standard on Different Day from Initial Calibration

In this step, the user enters the responses to a candidate standard that is tested on a different day from the calibration of STEP 1. The worksheet first assesses the zero and span responses. If the zero and span responses are acceptable, the user proceeds to enter the results from testing a candidate standard. The results include those for zero and nonzero reference standards. (The quadratic model requires the use of two different nonzero standards.)

The spreadsheet determines whether the regression curve has changed since the initial calibration. The data are corrected for any change and the estimated concentration of the candidate standard is provided together with its 95% uncertainty.

The spreadsheet also determines whether the standard error of the mean response is acceptable (<1% of the mean response). This additional check is meant to guard against hysteresis or other errors that are not corrected by the spreadsheet's adjustments.

2. Measurement Data Spreadsheet

STEP 1 Enter Calibration Data

Enter the calibration data in the shaded spaces below. The first column (I) simply counts the calibration points that you enter. The second column (X) is for the certified concentrations of the calibration gas standards. The third column (Y) is for the instrument responses corresponding to the calibration standards. The number of points cannot exceed 50.

I	X_i	Y_i	Color Code
1	0.000	0.2194	
2	0.500	0.7141	red = derived value (protected)
3	1.000	1.2885	
4	1.500	1.9132	blue = entered value (unprotected)
5	2.000	2.5910	
6	2.500	3.2866	black = fixed text (protected)
7	3.000	4.1078	
8	3.500	4.9446	
9	4.000	5.8145	
10	4.500	6.7230	
11	5.000	7.7284	
12	5.500	8.7566	
13	6.000	9.8013	
14	6.500	10.8818	
15	7.000	12.0982	
16	7.500	13.3122	
17	8.000	14.5840	
18	8.500	15.9238	
19	9.000	17.3271	

STEP 2 Review the Parameter Estimates

Review the estimates of the coefficients (b_0, (b_1,...) for the linear and quadratic models, their confidence, and the residual error variances (s^2).

Linear Model		95% Confidence Limits	
Parameter	**Estimate**	**Lower**	**Upper**
b_0 =	-1.0778	-1.7351	-0.4204
b_1 =	1.9005	1.7757	2.0253
s^2 =	0.4986	0.2807	1.1205
s =	0.7061	0.5298	1.0585
df =	17		
t =	2.1098		

Quadratic Model		95% Confidence Limits	
Parameter	**Estimate**	**Lower**	**Upper**
b_0 =	0.1964	0.1960	0.1968
b_1 =	1.0011	1.0010	1.0012
b_2 =	0.0999	0.0999	0.0999
s^2 =	0.0005	0.0003	0.0011
s =	0.0220	0.0164	0.0335
df =	16		
t =	2.1199		

Comparing the two models:

F_{ratio} = 1027
$F_{critical}$ = 2.3167 (5% significance level)

The quadratic model produces a significantly smaller error variance. The quadratic model appears to be the better choice.

If cubic or quartic models are supported by compelling scientific theory or data, then review the following estimates for those models. Otherwise, **go to Step 3.**

Cubic Model		95% Confidence Limits	
Parameter	**Estimate**	**Lower**	**Upper**
b_0 =	0.1952	0.1593	0.2310
b_1 =	1.0030	0.9676	1.0385
b_2 =	0.0994	0.0901	0.1087
b_3 =	0.0000	-0.0006	0.0007
s^2 =	0.0005	0.0003	0.0012
s =	0.0227	0.0168	0.0352
df =	15		
t =	2.1315		

Comparing quadratic and cubic models:

F_{ratio} = 0.9385
$F_{critical}$ = 2.3849 (5% significance level)

The error variances are not significantly different at the 5% level. The quadratic model appears to be a better choice than cubic.

Quartic Model		95% Confidence Limits	
Parameter	**Estimate**	**Lower**	**Upper**
b_0 =	0.2206	0.1900	0.2512
b_1 =	0.9285	0.8786	0.9783
b_2 =	0.1390	0.1156	0.1625
b_3 =	-0.0069	-0.0109	-0.0030
b_4 =	0.0004	0.0002	0.0006
s^2 =	0.0003	0.0001	0.0007
s =	0.0165	0.0121	0.0261
df =	14		
t =	2.1448		

Comparing quadratic and cubic models:

F_{ratio} = 1.8954
$F_{critical}$ = 2.4630 (5% significance level)

The error variances are not significantly different at the 5% level. The cubic model appears to be a better choice than quartic.

STEP 3 Review the Charts

View the charts named **Curves 1** and **Residuals 1**. **Curves 1** shows confidence bands for the estimated regression. Compare these bands with those of the quadratic regression, **Curves 2**. (*Note: You can change the width of the confidence band interval by changing the "p-value" in cell F4 of the worksheet named **Chart Data**.*) **Residuals 1** shows how the calibration points deviated from the calibration line. Look for a simple pattern (such as a quadratic curve) in the chart. If such a pattern appears, the quadratic model may be better. View **Residual 2**, the deviations from the best- fit quadratic curve. If **Residual 2** effectively removes the simple pattern observed in **Residual 1** and if the magnitude of the deviations has been significantly reduced (as evidenced by a reduction in the estimate s^2), then the quadratic model is superior. An F-test can be run to determine if the two error variances are significantly different.

F = 1026.764 Prob. of greater F = 4.51E-21

The quadratic model produces a significantly smaller error variance. The quadratic model appears to be the better choice.

STEP 4 Assess Magnitude of Uncertainty

Enter the concentration at which you would like to evaluate the uncertainty of estimation and prediction. Also enter r, the number of assays to be performed. Increasing r tends to reduce the prediction uncertainty, but with diminishing effect.

Concentration = 6
r = 3

Review the estimated mean response (estimate that only takes into account the calibration uncertainty), and the confidence intervals. Review the predicted mean response and its confidence intervals. To satisfy the EPA protocol requirements, the 95% confidence limits for the concentration should be $\leq \pm 1\%$ of the concentration.

Estimates below are based on the quadratic model. Tab-Right to view estimates based on the other model.

		95% Confidence Limits	
	Estimate	**Lower**	**Upper**
Instrument Response =	9.8006	9.7858	9.8155

		95% Confidence Limits	
	Prediction	**Lower**	**Upper**
Instrument Response =	9.8006	9.7698	9.8314
Concentration =	6.0000	5.9860	6.0140
95% uncertainty in prediction =		0.23%	

STEP 5 Assay Candidate Standard on Same Day

Proceed with the analysis of candidate standards if their 95% uncertainties, as estimated above, are <1%. Enter the responses from the repeated analyses of an individual candidate standard in the spaces provided below.

Note: This step applies only to candidate standards that are assayed on the same day as the calibration.

Enter the instrument responses for up to 10 repeated analyses of a single candidate standard below.

Analysis Number	Response	Estimated Concentration
1	4.500	3.2466
2	4.501	3.2473
3	4.499	3.2460
4		
5		
6		
7		
8		
9		
10		

NOTE: For Cubic and Quartic Model estimates, view the Calculations in the spreadsheet's shaded regions.

mean =	3.2466
standard deviation =	0.0006
df =	2
F =	0.0008
F sig? =	FALSE (The sample variance is acceptable.)
Pr(>F) =	0.9992
95% Uncertainty =	0.58%
23.97% =	portion of uncertainty[2] due to calibration

STEP 6 Assay Candidate Standard on Different Day from Initial Calibration

This step applies to candidate standards that are assayed on a different day than the initial calibration. Before candidate standards are run, the measurement system is challenged with zero and span checks. Three or more discrete checks of the zero gas and three or more checks of the span gas are made. Enter the results below:

Response to Zero gas	Span conc.	Response to Span
0.000	9.000	16.010
0.001	9.000	16.000
-0.001	9.000	15.990

n =	3	n =	3
mean =	0.000	mean =	16.000
s =	0.001	s =	0.010
Cal. Resp.=	0.196	Cal. Response =	17.301

	Zero Gas Results	Span Gas Results
Std. Error = s/sqrt(n) =	0.0006	0.0058
Rrs/100=	0.1600	0.1600
	Std. Error is okay	Std. Error is okay
Relative Difference (RD) =	1.14%	-7.52%
	RD is okay	RD is excessive

Following successful completion of the zero and span checks, the candidate standard is measured together with reference standards. While the candidate standard is normally interspersed with the reference standards, the analysis conducted in this sheet requires that the results be entered separately. There are two ways to do this. One way is to enter an analysis set (one candidate standard response and the responses from its zero and nonzero standard analyses) below. Another approach is to enter all of the responses (multiple sets) below. Enter zero and reference standard responses in the area to the left and enter the responses to a single candidate standard in the are to the right, below.

More than one nonzero reference standard is needed for the quadratic and higher-order models.

Estimates below are based on the quadratic model. Tab-Right to view estimates based on the other model.

Reference Standards (Enter 0 for Zero Concentraton)					Candidate Standard	
Conc.	Response	Conc.^{2}	Conc.^{3}	Conc.^{4}	Observed Response	Estimated Conc.
0.000	0.218	0.000	0.000	0.000	4.010	2.9437
0.000	0.219	0.000	0.000	0.000	4.000	2.9374
0.000	1.220	0.000	0.000	0.000	3.990	2.9311
4.500	6.693	20.250	91.125	410.063		
4.500	6.723	20.250	91.125	410.063	nnn =	3
4.500	6.773	20.250	91.125	410.063	mean = 4.000	2.9374
9.000	17.317	81.000	729.000	6561.000	stdev =	0.0063
9.000	17.327	81.000	729.000	6561.000	std error =	0.12%
9.000	17.337	81.000	729.000	6561.000	df =	2
					F =	0.1128
					F sig? =	FALSE
					Pr{>F}	0.8938
nn=	9				The standard error is okay.	

Coefficient are not significantly different.
Consider including thenew data as part of original calibration (Step 1).

Estimated Concentration of Candidate Standard
2.9374

95% Uncertainty
0.66%

Portion of uncertainty^2 due to calibration uncertainty
45.68%

95% Confidence Limits for Candidate Standard Concentration

Lower	Upper
2.9181	2.9567

These upper and lower limits are compared with the corresponding limits estimated on different assay dates to establish that the candidate standard has not drifted.

APPENDIX B: INSTRUCTION FOR PERMEATION RATE WORKBOOK

1. ReadMe Spreadsheet

What this Workbook Is All About

This workbook enables the user to estimate the rate at which the weight of a permeation tube decreases. A linear relationship between the tube's weight and elapsed time is established. If the estimated weight at time zero is significantly different from the actual weight at time zero, then at least the earliest data pair should be removed from the analysis. Uncertainty of the slope estimate (the rate of weight loss or drift) will be determined. The traceability protocol requires that this estimate have a relative uncertainty of less than 1%.

How the Workbook Is Organized

The workbook consists of several worksheets, which are displayed as tabs on the bottom of the screen. Each worksheet performs a distinct function as described below.

ReadMe	describes the workbook and explains how to use the worksheets
Data	allows for user input of the calibration data (elapsed time and weight)
ANOVA	performs analysis of variance and determines whether the intercept term is needed
Calibration Results	calculates the drift and its uncertainty
Curve	graphically displays the drift line together with its confidence bands
Residual	graphically displays the vertical difference between the observed and estimated weights
Report	summarizes the assay results for a permeation device
Chart Data	includes the data used to create the curve and residual charts.

How the Worksheets Are Set up

Each worksheet contains instructions that guide the user through the steps in using the worksheet. The worksheets are also color-coded to simplify use. Shaded cells that are bordered in blue lines are cells whose contents you can change (i.e., enter data). In other sheets you can change the following variables:

Sheet	Variable	Location	Current Value
Data	Unit of Time	H22	m
Data	Unit of Weight	H24	g
Report	Device ID	F5	test data
Chart Data	significance level	D2	1.00E-05

Derived values are colored red. These cells contain formulas that should not be changed. The cells are protected to prevent alteration.

How to Use the Worksheets

Step 1: Enter the elapsed times (all in the same units) and corresponding tube weights in the Data worksheet. The worksheet will compute the total weight loss for each observation.

Step 2: Select the significance level (alpha) to be used in producing confidence limits for the estimated slope and intercept. Then review the results of the F-test and t-test to determine whether the intercept term is needed. If the intercept term is significant, then determine which of the early data points should be removed. Removing those data, and correcting the elapsed times, repeat Steps 1 and 2.

Step 3: Examine the corresponding Curve chart. You may need to adjust the chart's axis scaling. The points should appear to fall virtually on top of the black line. The black line should be very close to its confidence bands (colored red and blue).

Step 4: Examine the corresponding Residual worksheet. The residuals should appear to be random in both magnitude and direction. If they appear to follow a regular pattern, then the simple linear model is not appropriate. The device does not have a constant rate of weight loss. More time may be required to establish and measure a linear relationship. Observations taken before the linear relationship is established should be discarded and not used in the statistical analysis.

Step 5: Print the one-page report provided in the Report sheet. The report summarizes the assay data and indicates the uncertainty of the estimate.

2. Data Entry Worksheet

Data Entry Worksheet

I	Elapsed Time X_I	Weight Y_I
0	0	4.354206
1	8641	4.33745
2	18722	4.316766
3	40322	4.273494
4	64802	4.224514
5	74882	4.20378
6	84962	4.18439

Enter the data in the blue-bordered spaces. The first column (**X**) is for the elapsed time. The time of the first entry should be zero. The second column (**Y**) is for the tube weights.

n = number of weighing. This can't exceed 50.

n = 7

No data entry is required for derived values, which are colored red, such as n and I. These values are tabulated automatically and their cells are protected from alteration.

Multiple weighings at a single point in time requires multiple entries in each column. Reenter the time in column **X** and enter the corresponding weight in column **Y**.

Enter the time and weight units in the spaces below:

Unit of Time = m

Unit of Weight = g

This sheet derives the regression equation in the form: $y = b_0 + b_1 x + \epsilon$. The intercept and slope are estimated. The sheet determines whether the intercept (weight estimated for time zero) is significantly different from the observed weight at time zero. It also estimates the uncertainty in the slope estimate and compares this uncertainty with EPA's 1% limit.

STEP 1

Review the estimates of the intercept (**b_0**), slope of the regression line (**b_1**), and their confidence limits along with the estimates of variance-covariance matrix (**V**) and the residual error variance (**Var**).

Derivation of the estimated intercept (b_0) and slope (b_1) of the regression line

X'X =	7	292331	Y'Y =	127.6972	**95% Confidence Limits**	
	292331	1.91E+10	df =	5	b_0 lower limit =	4.353872
$(X'X)^{-1}$ =	0.396793	-6.1E-06	t(0.95, df) =	2.570578	b_0 upper limit =	4.354935
	-6.1E-06	1.46E-10				
det(X'X) =	4.81E+10		b_0 =	4.354403	b_1 lower limit =	-2E-06
X'Y =	29.8946		b_1 =	-2E-06	b_1 lower limit =	-2E-06
	1234673					

Derivation of the error variance (**Var**) and variance-covariance matrix (**V**)

b'X'Y	=	127.6972		SS(model), 2df
b'X'Y - sum(Y)^2 / n	=	0.027619		SS(regression) 1df
(Y'Y - b'X'Y)	=	5.38E-07		SS(residual)
Var = (Y'Y - b'X'Y) / df	=	1.08E-07		MS(residual), n-2 df
V = Var * $(X'X)^{-1}$	=	4.27E-08	-6.5E-13	
		-6.5E-13	1.57E-17	

STEP 2

Examine the upper and lower limits for the intercept, b_0.

b_0 lower limit =	4.353872	
b_0 upper limit =	4.354935	
y_0 =	4.354206	Conclusion: y_0 is within the confidence limits for the intercept

If y_1 is within the confidence limits for the intercept, proceed to STEP 3. Otherwise, consider removing the first observed weight from the analysis. Re-enter the times and weights. Remember that the first time (X_0) should be zero. This will require adjustment of the other elapsed times. After entering the data, return to STEP 1, above.

STEP 3

Examine the upper and lower limits for the slope, b_1. The limits should differ from the estimate by no more than ±1% of the estimated slope.

(b_1 upper - b_1) / $\lvert b_1 \rvert$ =	0.51%	Conclusion: Uncertainty is acceptable.
(b_1 lower - b_1) / $\lvert b_1 \rvert$ =	-0.51%	

If the uncertainty is unacceptable, consider collecting additional data. Also, view the **Curve** and **Residual** plots. They may reveal a nonlinear relationship for a portion of the data. The initial measurements may not align with subsequent measurements if the device was in the process of stabilizing or equilibrating during those times. If this is the case, the initial points of the **Residual** chart would appear to be outliers. The residuals with the same sign (all positive or all negative) and their magnitude will likely be greater than the magnitude of subsequent residuals. If this is the case, consider removing the initial points from the computations and re-enter the remaining times and weights with the times adjusted so the first entry has time zero.

If the uncertainty is acceptable, print the **Report** spreadsheet and include it with the certification documentation.

3. Assay Results For Permeation Device

This sheet provides calibration information and assay results, including uncertainty estimates for a permeation device identified as: test data

Test Results

Intercept (b_0), slope (b_1), and their confidence limits

						95% Confidence Limits	
X'X =	7	292331	**Y'Y** =	127.6972			
	292331	1.91E+10	df =	5		b_0 lower limit =	4.353872
$(X'X)^{-1}$ =	0.396793	-6.1E-06	t(0.95, df) =	2.570578		b_0 upper limit =	4.354935
	-6.1E-06	1.46E-10					
det(X'X) =	4.81E+10		b_0 =	4.354403		b_1 lower limit =	-2E-06
X'Y =	29.8946		b_1 =	-2E-06		b_1 lower limit =	-2E-06
	1234673						

Error variance (**Var**) and variance-covariance matrix (**V**).

b'X'Y	=	127.6972	SS(model), 2df
b'X'Y - sum(Y)^2 / n	=	0.027619	SS(regression) 1df
(Y'Y - b'X'Y)	=	5.38E-07	SS(residual)
Var = (Y'Y - b'X'Y) / df	=	1.08E-07	MS(residual), n-2 df
V = Var * $(X'X)^{-1}$	=	4.27E-08	-6.5451E-13
		-6.5E-13	1.56725E-17

Upper and lower limits for the intercept, b_0:

b_0 lower limit =	4.3538722
b_0 upper limit =	4.3549347
y_0 =	4.354206

Upper and lower limits for the slope, b_1:

$(b_1 \text{ upper} - b_1) / |b_1| = 0.51\%$
$(b_1 \text{ lower} - b_1) / |b_1| = -0.51\%$

Estimated rate of weight loss, b_1 = 2.005E-06 g/m

APPENDIX C: CALCULATION OF TOTAL ANALYTICAL UNCERTAINTY

ASSAY RESULTS

In this sheet the results of two or three Assays are entered. Calibration dates are entered so Assays having the same calibration uncertainty may be treated correctly. (Assays having a common calibration share the same calibration uncertainty.)

Enter the results for up to three separate assays in chronological order below.

ASSAY 1

500 = estimated concentration
0.005 = 95% uncertainty (expressed as percentage of estimated concentration)
0.5 = portion of 95% uncertainty2 due to calibration
35551 = date of prior calibration

ASSAY 2

500 = estimated concentration
0.005 = 95% uncertainty (expressed as percentage of estimated concentration)
0.5 = portion of 95% uncertainty2 due to calibration
35582 = date of prior calibration

ASSAY 3 (if applicable)

500 = estimated concentration
0.005 = 95% uncertainty (expressed as percentage of estimated concentration)
0.5 = portion of 95% uncertainty2 due to calibration
35582 = date of prior calibration

Number of different calibrations represented by the above data:
N = 2 (If this value seems to be incorrect, check the dates entered for the three assays. The earliest data should be for Assay 1. Trailing spaces may cause N's formula to interpret identical dates as different.)

COMPARISONS

Calibration	Assay	Lower Confidence Limits	Upper Confidence Limits: Assay 1 502.5	Upper Confidence Limits: Assay 2 502.5	Upper Confidence Limits: Assay 3 502.5	Variance Components: Calibration	Variance Components: Imprecision
1	1	497.5	—	True	True	3.125	3.125
2	2	497.5	True	—	True	3.125	3.125
2	3	497.5	True	True	—	3.125	3.125

"FALSE" indicates an inconsistency such as an upper confidence limit for one assay that is lower than a lower confidence limit for another (non-overlapping intervals). "FALSE" will appear for Assay 3 if no data have been entered for Assay 3.

OVERALL ESTIMATE

Note: Calibration Case = 15

Case		Cal. No.	Cal. No.	Cal. No.
4*	=	1	1	---
6*	=	1	2	---
9	=	1	1	1
12	=	1	1	2
15	=	1	2	2
18	=	1	2	3

*4 and 6 are cases where there is no 3rd assay. In case 4, the two assays share a common calibration. In case 6, the two assays have different calibrations.

The standard error of the estimate produced in an assay is equal to approximately ½ of the "95% uncertainty." The inverse of the square of the standard error is the (raw) weighting factor used in producing an overall estimate of the concentration. The raw weights are adjusted (Adj. Wt.) so their sum is 1.00.

Calibration	Estimate	95% Uncert.	Raw Wt.	Adj. Wt.	Wt. *Conc.	Variance of Wt. *Est.
1	500	0.005	40000	0.4285714	214.28571	1.1479592
2	500	0.0043301	53333.333	0.5714286	285.71429	1.5306122
			0	0	0	0

500 = overall estimate of the candidate standard's concentration
1.6366342 = 95% uncertainty (concentration units)
0.0032733 = 95% relative uncertainty

The standard error and 95% uncertainty displayed above do not account for uncertainty in the reference standards used to calibrate the analytical instrument. In the space below, enter the 95% uncertainty (typically 2 times the standard error) of the reference standards. If different calibration standards had different uncertainties, enter the largest.

Example: If NIST SRMs were used in the calibration and their certified concentrations were 100 +/- 1 ppm, 200 +/- 1 ppm, 300 +/- 2 ppm, 400 +/- 3 ppm and 500 +/- 4 ppm, then the largest 95% uncertainty is for the 100 ppm standard: 1/100 = 0.01 or 1%. (SRM uncertainties are expressed as two-sigma limits which are 95% confidence intervals.)

0.005 = 95% uncertainty (2 times the standard error) of the reference standard

0.0059761 = 95% uncertainty of the candidate standard (including the contribution of the reference standard)

APPENDIX D: MATRIX NOTATION

1. Matrix Notation

Matrix notation is used to simplify the presentation of calculations that are performed in the linear regression. A matrix is a rectangular array of numbers. Boldface capital letters represent matrices, and lower case letters with subscripts represent individual numbers in the matrices. **X**, below, is a 10 by 3 matrix. It has 11 rows and 3 columns. The rows are numbered 0, 1, 2,...10 and columns are numbered 0, 1, and 2. (Other texts may begin numbering with 1.)

$$\mathbf{X} = \begin{matrix} 1 & 1.002 & 1.0040 \\ 1 & 0.902 & 0.8136 \\ 1 & 0.802 & 0.6432 \\ 1 & 0.701 & 0.4914 \\ 1 & 0.601 & 0.3612 \\ 1 & 0.501 & 0.2510 \\ 1 & 0.401 & 0.1608 \\ 1 & 0.301 & 0.0906 \\ 1 & 0.200 & 0.0400 \\ 1 & 0.100 & 0.0100 \\ 1 & 0.000 & 0.0000 \end{matrix}$$

$\mathbf{X}_{i,j}$ denotes the number that is found in the ith row and the jth column. $\mathbf{X}_{0,1} = 1.002$. The first row and column are numbered zero.

A matrix that has only one column is called a column vector, and a matrix that has only one row is called a row vector.

$$\mathbf{y} = \begin{matrix} 0.999 \\ 0.915 \\ 0.828 \\ 0.738 \\ 0.644 \\ 0.549 \\ 0.448 \\ 0.346 \\ 0.237 \\ 0.122 \\ 0.001 \end{matrix}$$ is a column vector.

Subscripts following vector names denote the row or column of the vector. For example, y_1 is the number in the second row of **y**, 0.915. (Remember that we begin counting rows with zero.)

Matrix operations that come into play for calibration include multiplication, transposition, and inversion. The rules for these operations can be found in any introduction to matrices. We will use the following notation for these operations:

X' denotes the transpose of **X** (the ith column of **X** becomes the ith row of **X'**)

For the matrices **X** and **Y** above,

$$X' = \begin{matrix} 1 & 1 & 1 & 1 & \ldots & 1 \\ 1.002 & 0.902 & 0.802 & 0.701 & \ldots & 0.000 \\ 1.0040 & 0.8136 & 0.6432 & 0.4914 & \ldots & 0.0000 \end{matrix}$$

X'Y denotes multiplication of matrices **X'** and **Y**. **X'** must have the same number of columns as **Y** has rows. For the matrix **X** above,

$$X'X = \begin{matrix} 11 & 5.511 & 3.8658 \\ 5.511 & 3.8658 & 3.0438 \\ 3.8658 & 3.0438 & 2.5544 \end{matrix} \quad \text{and} \quad X'Y = \begin{matrix} 5.827 \\ 4.0132 \\ 3.1272 \end{matrix}$$

det(**X'X**) = 1.0521 (the determinant of **X'X**)

$(X'X)^{-1}$ denotes the inverse of the product of **X'** and **X**

$$(X'X)^{-1} = \begin{matrix} 0.5800 & -2.1962 & 1.7392 \\ -2.196 & 12.5026 & -11.5744 \\ 1.7392 & -11.5744 & 11.5513 \end{matrix}$$

2. Calibration by Linear Regression Using Matrix Notation - Example

The linear regression approach is illustrated below for the simple quadratic curve.

The starting point for regression analysis will be a matrix named **X**. This matrix will have 3 columns (one for each coefficient to be determined). The number of rows will be the same as the number of calibration measurements that are performed by the measurement system. The

first column is a vector of 1s. The second column contains the certified concentrations of the calibration standards. The third column contains the squares of the values appearing in the second column. When this matrix is multiplied by the vector of coefficients $[b_0, b_1, b_2]$, the result is a vector of responses, so that:

$$response_i = 1 * b_0 + concentration_i * b_1 + concentration_i^2 * b_2$$

or, letting y represent response and x represent concentration,

$$y_i = b_0 + b_1 x_i + b_2 x_i^2$$

Now, we're interested in estimating the the coefficients b_0, b_1, and b_2, and we're also interested in computing how much error is involved when we use the information to estimate the concentration in an "unknown."

3. Determining the Calibration Equation

The coefficients of the calibration equation or curve are found by matrix multiplication and inversion:

$$b = (X'X)^{-1} X'Y = [b_0, b_1, b_2]$$

Example

$$X = \begin{matrix} 1 & 1.002 & 1.0040 \\ 1 & 0.902 & 0.8136 \\ 1 & 0.802 & 0.6432 \\ 1 & 0.701 & 0.4914 \\ 1 & 0.601 & 0.3612 \\ 1 & 0.501 & 0.2510 \\ 1 & 0.401 & 0.1608 \\ 1 & 0.301 & 0.0906 \\ 1 & 0.200 & 0.0400 \\ 1 & 0.100 & 0.0100 \\ 1 & 0.000 & 0.0000 \end{matrix} \qquad y = \begin{matrix} 0.999 \\ 0.915 \\ 0.828 \\ 0.738 \\ 0.644 \\ 0.549 \\ 0.448 \\ 0.346 \\ 0.237 \\ 0.122 \\ 0.001 \end{matrix} \qquad b'x = \begin{matrix} 0.9967 \\ 0.9151 \\ 0.8297 \\ 0.7394 \\ 0.6462 \\ 0.5491 \\ 0.4482 \\ 0.3434 \\ 0.2336 \\ 0.1210 \\ 0.0046 \end{matrix}$$

$$b = \begin{matrix} 0.0046 \\ 1.1837 \\ -0.1932 \end{matrix} \qquad b' = \begin{matrix} 0.0046 & 1.1837 & -0.1932 \end{matrix}$$

The quadratic calibration curve is: response = 0.0046 + 1.1837 C + -0.1932 * C^2

4. Determining the Estimation and Prediction Error

One assumption that underlies the regression approach is that random error is constant across the measurement range. Sometimes it may be necessary to apply a transformation in order to achieve this characteristic, called homogeneity of variance. An estimate of this variance is obtained using matrix operations:

Var = residual sum of squares / degrees of freedom = **Y'Y - b'X'Y** / df

This estimate's "degrees of freedom" (df) is the number of calibration points less the number of coefficients estimated for the calibration equation.

Another important output of the regression analysis is the "variance-covariance" matrix, **V**:

$$\mathbf{V} = \text{Var} * (\mathbf{X'X})^{-1}$$

The variance of each coefficient is found in the principal diagonal of **V**. For example, the variance of b_0 is $\mathbf{V}_{0,0}$. Covariances are found as off-diagonal elements of **V**.

Hypothesis tests can be performed and confidence intervals can be estimated for each coefficient using the coefficient's estimate, the coefficient's variance (contained in **V**), and the degrees of freedom, df.

Continuing our example

Var = (**Y'Y - b'X'Y**) / df = 5.91E-06

	3.43E-06	-1.3E-05	1.03E-05	
V =	-1.3E-05	7.39E-05	-6.8E-05	df = 8
	1.03E-05	-6.8E-05	6.83E-05	(df = degrees of freedom)

95% Confidence Interval for $\mathbf{b}_0 = \mathbf{b}_0$ +/- t(0.05,df) * sqrt($\mathbf{V}_{0,0}$)

95% CI for $\mathbf{b}_0$ = 0.000324 to 0.008865

t(0.05, df) = 2.306006

95% Confidence Interval for $\mathbf{b}_1 = \mathbf{b}_1$ +/- t(0.05,df) * sqrt($\mathbf{V}_{1,1}$)

95% CI for $\mathbf{b}_1$ = 1.163855 to 1.203512

95% Confidence Interval for $\mathbf{b}_2 = \mathbf{b}_2$ +/- t(0.975,df) * sqrt($\mathbf{V}_{2,2}$)

95% CI for $\mathbf{b}_2$ = -0.21224 to -0.17413

Another use of **V** is in computing the uncertainty in a regression predicted concentration of an individual unknown. The analyzer is subjected to the unknown, and a mean response, R, is produced. A solution for C is found. This is the estimated concentration of the unknown. Deriving the confidence intervals for this estimate requires finding two alternative concentrations, one higher and one lower than the estimate, such that the probability of having produced a lesser or greater average response is sufficiently small. For a 95% confidence interval, the lower bound is a concentration whose response would be less than the observed response with 97.5% probability; the upper bound is a concentration whose response would be less than the observed response with 97.5% probability.

Unfortunately, for quadratic curves, this derivation is not so simple.

R measurements of an unknown produce an average response resp:

R = 6

resp = 0.601

The estimated concentration is found by solving the following quadratic equation:

$0.601 = \mathbf{b}_0 + \mathbf{b}_1 C + \mathbf{b}_2 C^2$

$(\mathbf{b}_0 - 0.601) + \mathbf{b}_1 C + \mathbf{b}_2 C^2 = 0$

The potential solutions are found using the quadratic formula:

C = 0.553935 and 5.573267 (only the first of these is reasonable)

Now, if the concentration really had been at this value, the 95% confidence interval for the mean response of six measurements would be symmetric about the observed response:

As above, t = 2.306006

x = 1 0.553935 0.306843 = [1, resp, resp^2]

xb = 0.601 (check)

var(predicted mean response for x) = [var/R + x' V x]

x'V = -6.09E-07 6.97E-06 -6.7E-06

x'Vx = 1.2E-06

var/6 = 9.86E-07

var(predicted mean response for x) = 2.19E-06

95% confidence interval for predicted response = 0.597588 to 0.604412

This is the observed response -/+: 0.003412 and 0.003412

Solving for concentration, the interval is no longer <u>perfectly</u> symmetric:

0.550418 to 0.557456

This is the estimated concentration -/+: 0.003516 and 0.003521

As a percentage of the concentration, this is -/+: 0.006348 and 0.0063569

Fortunately, even with the quadratic calibration curve, with good precision, the confidence intervals will be within a small enough region that the curve is close to linear and the interval will be very nearly symmetric. The uncertainty criterion for multipoint calibration requires the 95% confidence interval's half-width to be less than 1%. The calibrated range of the analyzer extends across all concentrations for which the criterion is satisfied.

Continuing our example

Concentration	Estimated Response	95% conf. interval for response		95% conf. interval for concentration		% error for concentration	
1.002	0.9967	0.9924	1.0010	0.9966	1.0074	-0.53	0.54
0.902	0.9151	0.9121	0.9181	0.8985	0.9055	-0.39	0.39
0.802	0.8297	0.8273	0.8320	0.7993	0.8047	-0.33	0.33
0.701	0.7394	0.7371	0.7417	0.6985	0.7035	-0.36	0.36
0.601	0.6462	0.6437	0.6487	0.5984	0.6036	-0.43	0.43
0.501	0.5491	0.5466	0.5517	0.4984	0.5036	-0.51	0.52
0.401	0.4482	0.4457	0.4507	0.3986	0.4034	-0.60	0.60
0.301	0.3434	0.3411	0.3457	0.2988	0.3032	-0.72	0.72
0.200	0.2336	0.2313	0.2359	0.1979	0.2021	-1.06	1.06
0.100	0.1210	0.1181	0.1240	0.0974	0.1026	-2.58	2.59
0.000	0.0046	0.0003	0.0089	-0.0036	0.0036	---	---
0.210	0.2446	0.2423	0.2469	0.2079	0.2121	-0.9996	1.0004

The calibration curve's uncertainty is acceptable for concentrations above 0.21 ppm.

5. Stability Test

As discussed in Subsection 2.1.6.2, the stability test requires at least three initial measurements of the candidate standard plus at least three additional measurements following a period of 7 days or more. The standard's concentration must be in the calibrated range of the analyzer per Subsection 2.1.7.2.

Concentrations are estimated using the calibration curve, producing at least three estimates for the initial concentration and at least three estimates for the concentration following the holding time. A student's t-test is applied as follows:

Initial Data	**Final Data (after holding time)**
C1	C4
C2	C5
C3	C6

s_1 = standard deviation of (C1, C2, C3) $\quad x_1 = (C1 + C2 + C3) / 3$

s_2 = standard deviation of (C4, C5, C6) $\quad x_2 = (C4 + C5 + C6) / 3$

alpha = significance level of the test = 0.05

t(1-alpha/2,df) = value of student's t for which the distribution function value is 0.975 and degrees of freedom = number of observations - 2

$s = \text{sqrt}(s_1^2 + s_2^2)$

If lx1 - x2l / s > t(1-alpha/2,df) then the difference is statistically significant and the candidate standard has failed the initial stability test. The test can be repeated after an additional 7 days or more, using the second and third sets of results in the calculations, as above. If another significant difference is found, then the candidate standard is unusable and is disqualified for further use.

Example:

Initial Data	**Final Data (after 7-day holding time)**
0.995 ppm	0.989 ppm
0.996 ppm	0.989 ppm
0.992 ppm	0.982 ppm

s_1 = 0.0020817 ppm $\quad x_1$ = 0.9943333 ppm

s_2 = 0.0040415 ppm $\quad x_2$ = 0.9866667 ppm

s = 0.004546 ppm $\quad$ % difference = 0.77% ppm

lx1 - x2l / s = 1.686442

t(1-alpha/2,df) = 2.7764509

The difference is not statistically significant, so the standard can be certified as stable.

6. Recertification

Per Subsection 2.1.6.3, a standard can be recertified if, after the certification period has elapsed, the mean concentration of at least three assay results is within 1.0 percent of the original certified concentration. Additionally, the difference between the estimated mean and the certified concentration must not be statistically significant at the 1% level.

To determine whether the concentration of the standard has changed since the initial certification, new measurements are made using a measurement system that has been calibrated according to Subsection 2.1.7.5. Original certification data are used to provide an initial estimates of mean (x_1) and standard deviation (s_1). New data are used to estimate a second mean (x_2) and standard deviation (s_2). These are used in a t-test that is similar to that used in the stability test. A critical value for t is based on a significance level of 1% (alpha) and degrees of freedom equal to the number of initial and recertification data minus 2. A pooled estimate of the standard deviation (s) is derived from s_1 and s_2. If the difference between x_1 and x_2, divided by s, is greater (in absolute value) than the critical value for t, then the initial and new concentrations are significantly different and the standard cannot be recertified.

Example:

Initial Data	**Recertification Data**
0.995 ppm	0.989 ppm
0.996 ppm	0.99 ppm
0.992 ppm	0.994 ppm
0.999 ppm	
0.999 ppm	
0.993 ppm	

s_1 = 0.0029439	ppm	x_1 =	0.9956667	ppm
s_2 = 0.0026458	ppm	x_2 =	0.991	ppm
s = 0.0028619	ppm	% difference =	0.47%	

|x1 - x2| / s = 1.6306179

t(1-alpha/2,df) = 2.7764509

The % difference is less than the 1% specification, and the difference in means is not found to be statistically significant. The standard may be recertified. The certified concentration of the standard is the grand mean of the combined data set.

Certified Concentration = mean (initial data + recertification data) = 0.994 ppm