EPA-600/2-76-064
March 1976

Environmental Protection Technology Series

ATMOSPHERIC POLLUTION POTENTIAL FROM FOSSIL FUEL RESOURCE EXTRACTION, ON-SITE PROCESSING, AND TRANSPORTATION

Industrial Environmental Research Laboratory
Office of Research and Development
U.S. Environmental Protection Agency
Research Triangle Park, North Carolina 27711

RESEARCH REPORTING SERIES

Research reports of the Office of Research and Development, U.S. Environmental Protection Agency, have been grouped into five series. These five broad categories were established to facilitate further development and application of environmental technology. Elimination of traditional grouping was consciously planned to foster technology transfer and a maximum interface in related fields. The five series are:

1. Environmental Health Effects Research
2. Environmental Protection Technology
3. Ecological Research
4. Environmental Monitoring
5. Socioeconomic Environmental Studies

This report has been assigned to the ENVIRONMENTAL PROTECTION TECHNOLOGY series. This series describes research performed to develop and demonstrate instrumentation, equipment, and methodology to repair or prevent environmental degradation from point and non-point sources of pollution. This work provides the new or improved technology required for the control and treatment of pollution sources to meet environmental quality standards.

EPA REVIEW NOTICE

This report has been reviewed by the U.S. Environmental Protection Agency, and approved for publication. Approval does not signify that the contents necessarily reflect the views and policy of the Agency, nor does mention of trade names or commercial products constitute endorsement or recommendation for use.

This document is available to the public through the National Technical Information Service, Springfield, Virginia 22161.

EPA-600/2-76-064
March 1976

ATMOSPHERIC POLLUTION POTENTIAL FROM FOSSIL FUEL RESOURCE EXTRACTION, ON-SITE PROCESSING, AND TRANSPORTATION

by

E.C. Cavanaugh, G.M. Clancy, J.D. Colley, P.S. Dzierlenga,
V.M. Felix, D.C. Jones, and T.P. Nelson

Radian Corporation
P.O. Box 9948
Austin, Texas 78766

Contract No. 68-02-1319, Task 19
ROAP No. 21ADD-042
Program Element No. 1AB013

EPA Task Officer: L. Lorenzi, Jr.

Industrial Environmental Research Laboratory
Office of Energy, Minerals, and Industry
Research Triangle Park, NC 27711

Prepared for

U.S. ENVIRONMENTAL PROTECTION AGENCY
Office of Research and Development
Washington, DC 20460

ABSTRACT

Information in this report was compiled for the purpose of providing the Environmental Protection Agency with technical information relative to atmospheric emissions from facilities for extraction, on-site processing, and transportation of fuel resources. Fuel resources considered are coal, oil shale, oil, and gas.

The nature of each operation is described, including past, present, and projected future practices. Potential air emissions from each type of facility are defined and quantified, where possible. The status of monitoring methods and control techniques for these emissions are discussed.

Areas where research and development can be usefully applied to production and air emission control problems are identified.

TABLE OF CONTENTS

		Page
	ABSTRACT	iii
	LIST OF TABLES	vii
	LIST OF FIGURES	xii
1.0	SUMMARY	1
1.1	Project Objectives	1
1.2	Study Approach	2
1.3	Conclusions and Comments	5
2.0	PROCESS TECHNOLOGY DESCRIPTION	11
2.1	Coal Production	11
2.1.1	Underground Mining	11
2.1.2	Coal Preparation Plant	17
2.1.3	Surface Mining	20
2.1.4	In-Situ Combustion of Coal	25
2.2	Oil Shale Extraction	29
2.2.1	Room and Pillar Mining	29
2.2.2	Surface Mining	33
2.2.3	Sizing Operations	36
2.2.4	In-Situ Processing	38
2.3	Oil Production	43
2.3.1	Oil Removal	43
2.3.2	Brine Removal	46
2.3.3	Oil-Gas Separation	51
2.3.4	Crude Storage	51
2.3.5	Water Treating	53
2.3.6	Secondary, Tertiary Recovery	58
2.3.7	In-Situ Combustion	59
2.4	Gas Production	61
2.4.1	Gas Field Operations	61
2.4.2	Gas Processing Plant Operations	64
2.5	Transportation	77
2.5.1	Coal Transportation	77
2.5.2	Crude Oil Transportation	82
2.5.3	Gas Pipeline Transportation	85

TABLE OF CONTENTS (Cont.)

		Page
3.0	IDENTIFICATION OF EMISSIONS	87
3.1	Coal Production Modules	89
3.1.1	Strip Mine Module	89
3.1.2	Room and Pillar Mining Module	102
3.1.3	In-Situ Coal Production Module	112
3.2	Oil Shale Extraction Modules	116
3.2.1	Surface Mine Module	116
3.2.2	Room and Pillar Mine Module	122
3.2.3	In-Situ Shale Oil Production	127
3.3	Oil Production Module	134
3.4	Gas Production Module	145
3.5	Transportation Modules	156
3.5.1	Coal Transportation Modules	156
3.5.2	Oil Transportation Modules	166
3.5.3	Gas Transportation Module	176
3.6	Comparison of Module Emissions	178
4.0	MONITORING TECHNOLOGY	182
4.1	Ambient Air Quality Monitoring	184
4.1.1	Background	184
4.1.2	General Monitoring Considerations	186
4.2	Source Monitoring for Air	190
4.2.1	Background	190
4.2.2	General Monitoring Procedures	193
5.0	EMISSION CONTROL TECHNOLOGY	196
5.1	Particulate Control Systems	197
5.1.1	Sources of Particulate Emissions	197
5.1.2	Control Methods for Particulate Emissions	201

TABLE OF CONTENTS (Cont.)

		Page
5.2	SO_2 Control Systems	213
5.3	Hydrocarbon Control Systems	217
5.4	Nitrogen Oxides Control Systems	222
5.5	Carbon Monoxide Control Systems	226
5.6	Fugitive Emissions Control	229
6.0	POTENTIAL PRODUCTION PROBLEMS	234
6.1	Coal Production	234
6.1.1	Underground Mining Operations	234
6.1.2	Surface Mining Operations	236
6.1.3	Coal Preparation	237
6.2	Oil and Gas Production	243
6.2.1	Drilling Operations	243
6.2.2	Production Phase	245
7.0	AREAS FOR RESEARCH AND DEVELOPMENT	261
	REFERENCES	269
	CONVERSION FACTORS	277

LIST OF TABLES

		Page
TABLE 1.3-1	COMPARISON OF EMISSIONS FROM EXTRACTION MODULES	6
TABLE 1.3-2	COMPARISON OF EMISSIONS FROM TRANSPORTATION MODULES	7
TABLE 2.1-1	ESTIMATED BITUMINOUS AND LIGNITE PRODUCTION FOR 1973	12
TABLE 2.1-2	COMPARISON OF CONVENTIONAL, CONTINUOUS, AND LONGWALL MINING	18
TABLE 2.3-1	OIL PRODUCTION OPERATING OPTIONS	44
TABLE 2.3-2	CLASSIFICATION OF PRIME MOVERS	45
TABLE 2.4-1	TYPICAL DISTRIBUTION OF COMPONENTS IN U.S. NATURAL GAS AT THE WELL	63
TABLE 2.4-2	TYPICAL ACID GAS TREATING PROCESSES	68
TABLE 3.1-1	SUMMARY OF ATMOSPHERIC EMISSIONS - STRIP MINING COAL MODULE	90
TABLE 3.1-2	MODULE EMISSIONS - STRIP MINING COAL MODULE	97
TABLE 3.1-3	AIR EMISSION FACTORS FOR HEAVY-DUTY DIESEL ENGINES	98
TABLE 3.1-4	THERMAL DRYERS	101

LIST OF TABLES (Cont.)

		Page
TABLE 3.1-5	EMISSION FACTORS FOR THERMAL DRYING WITH A FLUIDIZED-BED DRYER.	101
TABLE 3.1-6	SUMMARY OF ATMOSPHERIC EMISSIONS - ROOM AND PILLAR COAL MINE MODULE.	103
TABLE 3.1-7	MODULE EMISSIONS - ROOM AND PILLAR COAL MINE MODULE.	108
TABLE 3.1-8	AIR EMISSION FACTORS FOR HEAVY-DUTY DIESEL ENGINES	111
TABLE 3.1-9	EMISSION FACTORS FOR BURNING REFUSE PILES.	111
TABLE 3.1-10	SUMMARY OF ATMOSPHERIC EMISSIONS - IN-SITU COAL PRODUCTION MODULE	113
TABLE 3.1-11	TYPICAL GAS ANALYSIS OF IN-SITU COAL FUEL GAS.	115
TABLE 3.2-1	SUMMARY OF ATMOSPHERIC EMISSIONS - OIL SHALE SURFACE MINING MODULE.	117
TABLE 3.2-2	MODULE EMISSIONS - OIL SHALE SURFACE MINE MODULE	119
TABLE 3.2-3	SUMMARY OF ATMOSPHERIC EMISSIONS - OIL SHALE ROOM AND PILLAR MINE MODULE.	123
TABLE 3.2-4	MODULE EMISSIONS - OIL SHALE ROOM AND PILLAR MINE MODULE	126

LIST OF TABLES (Cont.)

		Page
TABLE 3.2-5	SUMMARY OF ATMOSPHERIC EMISSIONS - IN-SITU SHALE OIL PRODUCTION MODULE.	128
TABLE 3.2-6	CHARACTERISTICS OF GASES FROM IN-SITU RETORTING.	131
TABLE 3.2-7	MODULE EMISSIONS - IN-SITU OIL SHALE PRODUCTION MODULE.	133
TABLE 3.3-1	SUMMARY OF ATMOSPHERIC EMISSIONS - DOMESTIC CRUDE PRODUCTION MODULE	135
TABLE 3.3-2	MODULE EMISSIONS - DOMESTIC CRUDE OIL PRODUCTION MODULE.	139
TABLE 3.3-3	AIR EMISSION FACTORS FOR THE COMBUSTION OF NATURAL GAS AND FUEL OIL.	140
TABLE 3.3-4	HEATER TREATER HEAT REQUIREMENTS	141
TABLE 3.3-5	STEAM GENERATOR HEAT LOADS	141
TABLE 3.3-6	MISCELLANEOUS OIL PRODUCTION EMISSION FACTORS.	143
TABLE 3.3-7	EMISSION FACTORS FOR FLARING AND OIL DISCHARGE	143
TABLE 3.4-1	SUMMARY OF ATMOSPHERIC EMISSIONS - GAS PRODUCTION MODULE	146
TABLE 3.4-2	MODULE HEAT REQUIREMENT - GAS PRODUCTION MODULE	151
TABLE 3.4-3	MODULE EMISSIONS - GAS PRODUCTION AND PROCESSING MODULE.	152

LIST OF TABLES (Cont.)

		Page
TABLE 3.4-4	EMISSION FACTORS FOR GAS PRODUCTION MODULE	153
TABLE 3.5-1	SUMMARY OF ATMOSPHERIC EMISSIONS- RAIL TRANSPORT OF COAL MODULE	157
TABLE 3.5-2	WORK OUT-PUT - BASED LOCOMOTIVE EMISSION FACTORS.	159
TABLE 3.5-3	FUEL - BASED LOCOMOTIVE EMISSION FACTORS .	159
TABLE 3.5-4	SUMMARY OF ATMOSPHERIC EMISSIONS - BARGE TRANSPORT OF COAL MODULE	163
TABLE 3.5-5	EMISSION FACTORS FOR HEAVY-DUTY, DIESEL POWERED VEHICLES	165
TABLE 3.5-6	SUMMARY OF ATMOSPHERIC EMISSIONS - CRUDE OIL PIPELINE TRANSPORTATION MODULE	167
TABLE 3.5-7	SUMMARY OF ATMOSPHERIC EMISSIONS - CRUDE OIL TANKER WHILE IN-TRANSIT.	170
TABLE 3.5-8	SUMMARY OF ATMOSPHERIC EMISSIONS - CRUDE OIL TANKER WHILE IN BERTH	171
TABLE 3.5-9	SUMMARY OF ATMOSPHERIC EMISSIONS - CRUDE OIL RAIL TRANSPORTATION MODULE	174
TABLE 3.5-10	SUMMARY OF ATMOSPHERIC EMISSIONS - NATURAL GAS PIPELINE TRANSPORTATION MODULE	177

LIST OF TABLES (Cont.)

		Page
TABLE 3.6-1	COMPARISON OF EMISSIONS FROM EXTRACTION MODULES	180
TABLE 3.6-2	COMPARISON OF EMISSIONS FROM TRANSPORTATION MODULES	181
TABLE 4.1-1	SUMMARY OF AMBIENT AIR STANDARDS	185
TABLE 4.2-1	PROPOSED EMISSION LIMITS FOR COAL PREPARATION PLANTS	191
TABLE 5.1-1	PARTICULATE CONTROLS FOR CRUSHING AND SCREENING OPERATIONS	206
TABLE 5.1-2	PARTICULATE EMISSION CONTROLS FOR COAL THERMAL DRYERS	212
TABLE 5.2-1	PROCESSES FOR CLAUS TAIL GAS TREATMENT	214

LIST OF FIGURES

		Page
FIGURE 2.1-1	THE THREE TYPES OF ACCESS USED IN UNDERGROUND COAL MINES.	13
FIGURE 2.1-2	ILLUSTRATION OF ROOM AND PILLAR MINING USING CONVENTIONAL (BLASTING) AND CONTINUOUS MINING TECHNIQUES	15
FIGURE 2.1-3	ILLUSTRATION OF LONGWALL MINING TECHNIQUE	16
FIGURE 2.1-4	WET COAL CLEANING PROCESS	21
FIGURE 2.1-5	DRY COAL CLEANING PROCESS	22
FIGURE 2.1-6	AREA MINING	24
FIGURE 2.1-7	U.S. PATENT ON IN-SITU GASIFICATION OF COAL UTILIZING NON-HYPERSENSITIVE EXPLOSIVES.	27
FIGURE 2.2-1	ROOM AND PILLAR MINE.	30
FIGURE 2.2-2	STEPS INVOLVED IN OIL SHALE SURFACE MINING.	34
FIGURE 2.2-3	SHALE SIZING OPERATIONS	37
FIGURE 2.2-4	SCHEMATIC REPRESENTATION OF AN IN-SITU RETORTING OPERATION	40

LIST OF FIGURES (Cont.)

		Page
FIGURE 2.2-5	WELL MOVEMENT IN IN-SITU SHALE PROCESS.	41
FIGURE 2.3-1	HEATER TREATER.	48
FIGURE 2.3-2	PICTORIAL ASSEMBLY OF PETRECO ELECTRIC DEHYDRATOR.	49
FIGURE 2.3-3	WASH TANK	50
FIGURE 2.3-4	OIL-GAS SEPARATORS.	52
FIGURE 2.3-5	BOLTED STEEL TANK	54
FIGURE 2.3-6	VAPOR RECOVERY SYSTEM	55
FIGURE 2.3-7	WASTEWATER SYSTEM	57
FIGURE 2.4-1	FLOW DIAGRAM FOR THREE-STAGE WELLHEAD SEPARATION UNIT	65
FIGURE 2.4-2	NATURAL GAS PROCESSING PLANT.	67
FIGURE 2.4-3	TYPICAL AMINE TREATING UNIT	70
FIGURE 2.4-4	CLAUS SULFUR RECOVERY UNIT	71
FIGURE 2.4-5	TWO BED SOLID ADSORBENT TREATER	73
FIGURE 2.4-6	TYPICAL GLYCOL DEHYDRATION UNIT	74

LIST OF FIGURES (Cont.)

		Page
FIGURE 2.5-1	BULK COAL MOVEMENTS	79
FIGURE 3.1-1	TYPICAL DRAGLINE OPERATION.	92
FIGURE 3.1-2	STRIP MINING COAL MODULE.	93
FIGURE 3.1-3	COAL CLEANING PLANT	94
FIGURE 3.1-4	TYPICAL SHAFT-TYPE MINE	104
FIGURE 3.1-5	ROOM AND PILLAR COAL MINE	106
FIGURE 3.2-2	OIL SHALE UNDERGROUND MINE.	124
FIGURE 3.2-3	IN-SITU SHALE OIL PRODUCTION MODULE . .	129
FIGURE 3.3-1	CRUDE OIL PRODUCTION.	137
FIGURE 3.4-1	GAS PROCESSING PLANT.	147
FIGURE 3.4-2	NITROGEN OXIDES EMISSIONS FROM STATIONARY INTERNAL COMBUSTION ENGINES	154
FIGURE 6.1-1	RELATIVE WATER SURPLUS OR DEFICIENCY IN THE UNITED STATES.	241
FIGURE 6.1-2	LARGE RIVERS OF THE UNITED STATES . . .	242
FIGURE A-1	SURFACE-WATER LAWS	253

LIST OF FIGURES (Cont.)

Page

FIGURE A-2 GROUND-WATER LAWS 255

1.0 SUMMARY

1.1 Project Objectives

The objective of this report is to provide technical information on the atmospheric environmental problem definition associated with the production, on-site processing, and transportation of coal, oil, and gas. This report includes the following major elements:

(1) A review of the current status of coal, oil, and gas production technology including on-site processing and transportation.

(2) A review of the oil shale mining technology, including in-situ shale oil production.

(3) Modules developed to represent typical processing sequences for the production and transportation of these fuels.

(4) Identification of the source, quantity, and composition of atmospheric emissions from each module.

(5) A review of monitoring methods applicable to known or projected emission sources.

(6) A review and comparison of control methods which may be employed in the production and transportation modules.

(7) Identification of problem areas associated with extraction processes.

(8) Identification of priority work areas for research and development.

1.2 Study Approach

The work performed in this study has been divided into essentially two areas: (1) the identification of atmospheric emissions and emission sources for the various technologies and (2) the evaluation of environmental requirements resulting from these emissions in terms of monitoring methods, control techniques, plant impact problems, and areas requiring research and development. Sections 2.0 and 3.0 of this report review the various extraction, processing, and transmission technologies and establish the emissions associated with each. Sections 4.0 through 7.0 address various environmental problems associated with these emissions.

A modular approach is utilized in this study whereby segments of the industries examined are represented as typical operating units, each with its characteristic atmospheric emissions. The initial step in establishing these modules includes a review of the technology involved in each industry. Extraction and transportation alternatives are considered, as are options for on-site upgrading. State-of-the art descriptions for the coal, shale oil, petroleum oil, and gas production and transportation industries presented in Section 2.0 are the basis for process modules derived in Section 3.0.

This report is limited to the air emissions from these technologies. Criteria pollutants such as particulates, SO_x, CO, NO_x, and hydrocarbons are quantified in Section 3.0 to the extent such information was available from the literature. There was no attempt to quantify trace elements, trace organics, or potentially hazardous chemicals in air emissions; nor were liquid effluents and solid wastes addressed in detail in this study.

Modules presented in this report are as follows:

Production

- strip mining of coal
- room and pillar coal mining
- in-situ coal gasification
- surface oil shale mining
- room and pillar oil shale mining
- in-situ shale oil production
- oil well production
- gas well production

Transportation

- coal by rail
- coal by barge
- coal by pipeline
- oil by rail
- oil by tanker
- oil by pipeline
- gas by pipeline

Three coal extraction methods are presented. Similar mining modules for oil shale are included to illustrate the similarities and differences in the two technologies. Module capacities or flow rates were assumed typical of current commercial plant operations. After each module basis is established in terms of operation, capacity, and energy or fuel demand, the character and sources of emissions for that module are identified. Module emissions per equivalent unit of fuel value handled are also compared in this report.

Regulations and monitoring techniques applicable to the identified emission sources are discussed in Section 4.0. Ambient air sampling and analytical methods are discussed. Problem areas associated with monitoring technology, such as accuracy and costs, are identified and gaps in technology noted.

Emission control techniques are addressed in Section 5.0. Potential control methods are described and alternative control methods are compared. Special problems, such as measurement and control of fugitive emissions, are discussed. Control methods for achieving maximum pollutant reduction are identified and techniques having potentital for near zero discharge are described.

Problems associated with extraction technologies are presented in Section 6.0. Criteria such as raw material supply, energy supply, product transportation, and federal, state and local laws are discussed.

Priority work for research and development activities is suggested in Section 7.0. Areas related to pollutant identi-

fication, emission quantification, and control methods are identified. Priority areas for control methods are established based on the extent of pollutants controlled, on the need for further control, on the degree of control possible, on the impact and energy requirements of the control methods, and on the status and cost of developments.

1.3 Conclusions and Comments

Air Emissions Overview

This study compares air emissions from facilities for extracting and transporting fuels that represent the principle sources, both present and future, of the nation's fossil fuel energy supply. It is convenient and reasonable to compare expected emissions from these operations on the basis of pounds of emissions per unit of energy delivered.

Tables 1.3-1 and 1.3-2 contain data summarizing much of the investigations performed during this project. Estimated emissions of criteria pollutants are given in pounds per day for each "energy module" of one trillion Btu per day. The technologies studied range from those defined as established practice to those for which virtually no industrial experience has been logged. For example, emissions from strip mining and room and pillar mining of coal, both well established technologies, can reasonably be estimated with greater confidence than those from in-situ shale oil recovery, which is virtually an undeveloped industry. The value of these comparisons, however, is allowing examination of the magnitude of emissions from technologies both familiar and new, especially as they may impact

TABLE 1.3-1

COMPARISON OF EMISSIONS FROM EXTRACTION MODULES

Basis: 10^{12}Btu/Day Fuel Output

Air Emissions, lb/day

Pollutant	Coal Mining					Oil Shale Mining			Oil Well Production [7]	Gas Well Production [8]
	Strip [1]		Room and Pillar [2]		In-Situ [3]	Surface [4]	Room and Pillar [5]	In-Situ [6]		
Particulates	11,900	(15,200)	6,190	(84,000)	5,500	65,200	13,100	107,000	1,130	200
SO_x	273	(8,730)	8,530	(125,000)	NA	1,680	39.3	239,000	12,910	44,900
CO	2,290	(2,610)	562	(233,000)	30,000	14,100	335	414,000	8,290	200
NO_x	3,740	(7,870)	4,560	(42,900)	NA	23,100	550	12,400	20,400	63,000
Hydrocarbons	432	(568)	352,000	(391,000)	65,000	2,620	64.2	48,000	21,300	273,000

[1] Adjusted from 6,300 TPD run-of-mine coal (12,000 Btu/lb). Emissions in parentheses include emissions from physical coal cleaning.
[2] Adjusted from 6,300 TPD run-of-mine coal (12,000 Btu/lb). Mining emission values include emissions from physical coal cleaning. Emissions in parentheses include emissions from burning refuse piles.
[3] Adjusted from 10^9Btu/day fuel gas produced. Data on SO_x and NO_x emissions were not available.
[4] Adjusted from 50,000 bbl/day of upgraded shale oil capacity (5.6 x 10^6Btu/bbl).
[5] Adjusted from 50,000 bbl/day of upgraded shale oil capacity (5.6 x 10^6Btu/bbl).
[6] Adjusted from 50,000 bbl/day of upgraded shale oil capacity (5.6 x 10^6Btu/bbl).
[7] Values adjusted from module producing 1,000 BPD crude oil (5.6 x 10^6Btu/bbl), assuming use of water flooding, heater treater, and 50% brine content.
[8] Values adjusted from production of 5.0 x 10^8SCFD gas (1000 Btu/SCF).

TABLE 1.3-2

COMPARISON OF EMISSIONS FROM TRANSPORTATION MODULES

Basis: 10^{12}Btu/Day Fuel Output

	Air Emissions, lb/day								
	Coal Transportation				Tanker Transportation of Oil [5]				
Pollutant	Rail [1]	Barge [2]	Slurry Pipeline [3]	Rail Transportation of Oil [4]	In-Transit	Loading	Unloading	Pipeline Transportation of Oil [6]	Pipeline Transportation of Gas [7]
Particulates	1,260	281	Negligible	1,730	40	3	3	122	Negligible
SO_x	2,840	583	Negligible	3,980	370	30	30	253	Negligible
CO	3,410	4,880	Negligible	5,250	Neg.	Neg.	Neg.	2,110	Negligible
NO_x	17,700	8,020	Negligible	27,500	480	40	40	3,470	241,000
Hydrocarbons	8,200	931	Negligible	107,000	3,300	18,000	16,000	403	Negligible

[1] Adjusted from 12,600 tons of coal transported (12,000 Btu/lb).
[2] Adjusted from 20,000 TPD coal transported (12,000 Btu/lb).
[3] A slurry pipeline powered by electrically driven pump stations should have negligible atmospheric emissions directly associated with the pipeline.
[4] Adjusted from 10^6gal/day oil transported (5.6 x 10^6 Btu/bbl).
[5] Adjusted from transportation of 825,000 BPD oil (5.6 x 10^6Btu/bbl)
[6] Adjusted from transportation of 42,000 gpm oil (5.6 x 10^6Btu/bbl).
[7] Adjusted from transportation of 80.2 MMSCFD pipeline gas (1000 Btu/SCF).

the environment as the quantities and natures of fuels change.

The possible trends to extraction of Western coals can change the nature of emissions considerably. Compared to room and pillar methods, strip mining operations have minimal hydrocarbon emissions, but larger particulates, while in-situ coal combustion to produce low-Btu fuel gas will be a high carbon monoxide emitter. Refuse burning at existing room and pillar coal mines is a major contributor to emissions from these operations.

Oil shale mining and in-situ removal of shale oil must be considered as potential sources of domestic energy because of the huge deposits of oil shale in the Western United States. Much of the oil shale extraction technology is similar to coal extraction and therefore has comparable types of emissions. The quantity of emissions are probably much greater than the coal extraction emissions due to the order-of-magnitude larger quantity of material handled per unit of recoverable energy. It is expected that solid disposal and land use impacts will be of greater concern than air emissions from oil shale operations, except possibly with in-situ removal.

Oil and gas well emissions are well established through years of experience. While criteria pollutants from gas wells are by nature quite large, especially hydrocarbons and sulfur and nitrogen compounds, the remoteness of most wells tends to minimize the impact of these emissions.

Transportation modules do not appear to be serious emitters. Oil transportation by rail is a potential source of hydrocarbon emissions; however, this is a little-used means of transporting domestic oil. NO_x exhausted from gas-fired compressor drivers is a major emission from gas pipeline operations.

Modular Concept

Considerable value was derived in using the modular approach to expressing the various technologies. First, it allowed each process or operation to be examined as an actual commercial unit. The types of equipment from which emissions are known to come were studied individually. Examples are emissions from diesel-fueled vehicles, coal-fired dryers, and gas-fired compressors. Second, much of the equipment used in established industries, such as coal mining and processing, will undoubtedly be used also in less developed technologies. Thus, there are emissions data translatable to new technology based on knowledge of existing boilers, grinders, compressors, and so forth.

Monitoring and Control Technologies

The technologies for monitoring criteria pollutants are fairly well established. Still to be resolved, however, is the relationship between what leaves an extraction or transportation module and how that emission impacts the environment. Devices for controlling the criteria pollutants are also available, although the relationship between source emissions, the areas impacted, and emission regulations is often obscure.

The need for further work in ambient air quality and air emissions is underlined in Section 7.0. Work in some mine areas relating to ambient air quality is suggested. A similar block of tasks for air emissions technology has been recommended. Other work considered useful involves studies updating costs of the extraction and transportation modules. Other areas of concern are water monitoring, effluent control, and solid waste disposal

problems which are outside the scope of this program, but which are closely related environmental problems. Non-criteria air emissions, especially potentially hazardous compounds from extraction and transportation modules, will receive considerable attention in the future.

2.0 PROCESS TECHNOLOGY DESCRIPTION

Descriptions of the present status of the coal, oil, and gas production and transportation technologies are presented in this section of the report. The operations associated with each of the technologies are identified, and various alternatives are discussed. Typical processing sequences are presented for each production industry. This state-of-the-art review provides a basis for the selection of specific modules to represent the technologies for emission determinations in Section 3.0.

2.1 Coal Production

Due to the present-day emphasis on coal as an energy source, coal production has become of primary national interest. The types of mining operations used can be divided into two categories, underground mining and surface mining. The underground mining techniques are conventional room and pillar, continuous room and pillar, and longwall. The surface mining techniques are strip or area mining and contour and auger mining. A summary of 1973 production rates for the various methods is given in Table 2.1-1 (NI-036). Extraction of coal as a gas by in-situ gasification techniques can also be considered as a potential method of removing coal energy from the ground, although this technique is in the experimental phase of development.

2.1.1 Underground Mining

The development of all three types of underground mines follows the same procedures. First, at least three main accesses or shafts are strategically driven to the coal bed. The accesses can be of three types: drift, slope, or shaft. These types of accesses are shown in Figure 2.1-1 (TR-049).

TABLE 2.1-1

ESTIMATED BITUMINOUS AND LIGNITE PRODUCTION FOR 1973

Underground Mining	Millions of Tons	Percent of Total
Continuous Room & Pillar	181.0	30.7
Longwall	8.0	1.3
Conventional Room & Pillar	102.0	17.3
Surface Mining		
Strip Mining	283.0	48.0
Auger Mining	16.0	2.7
Total	590.0	100.0

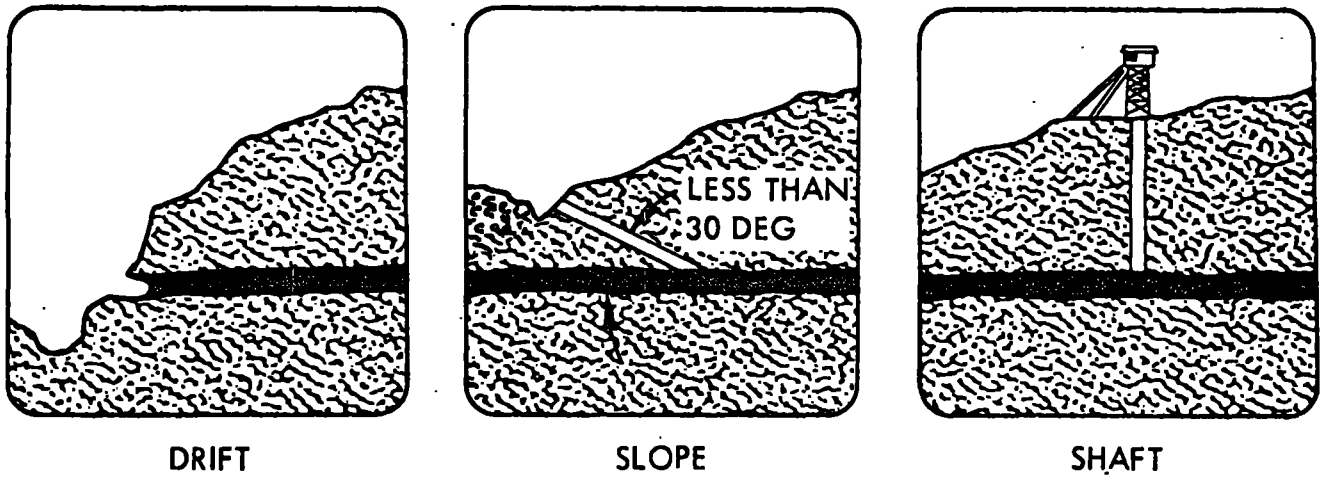

FIGURE 2.1-1 THE THREE TYPES OF ACCESS USED IN UNDERGROUND COAL MINES

Once the main accesses have been constructed, two parallel main entries into the coal bed are driven in the direction of the mining operation. From the main entries, panel entries are driven and divide the coal seam into blocks. Finally, from the panel entries, butt entries are made into the coal seam. The butt entries will result in the formation of "pillars" which support the roof. This is the room and pillar or advance type mine. This method of mining will recover approximately 50 percent of the coal. If the ground can be allowed to subside, an additional 35 percent of the total amount of coal can be removed by retreat mining. Instead of the butt entries a longwall technique can be used in which the entire side of the panel is mined at once leaving no pillar. Longwall mining removes 80 to 85 percent of the coal in the mine (TR-049).

Room and pillar mining, as previously mentioned, is either performed by conventional methods or by continuous miners. Figure 2.1-2 illustrates both of these methods (TR-049). In conventional methods the coal seam is blasted and then loaded by electric loaders on shuttle cars or conveyors and hauled to the main conveyor or mine rail car train. With the electric continuous miner the coal is scraped from the seam and loaded directly on a conveyor or shuttle car. The coal is transported to the main conveyor or mine rail car train, and from there out of the mine.

Longwall mining has been very popular in Europe but is not used extensively in the United States. The longwall process is shown in Figure 2.1-3 (TR-049). The electric longwall miner advances laterally down the panel scraping and shearing the coal

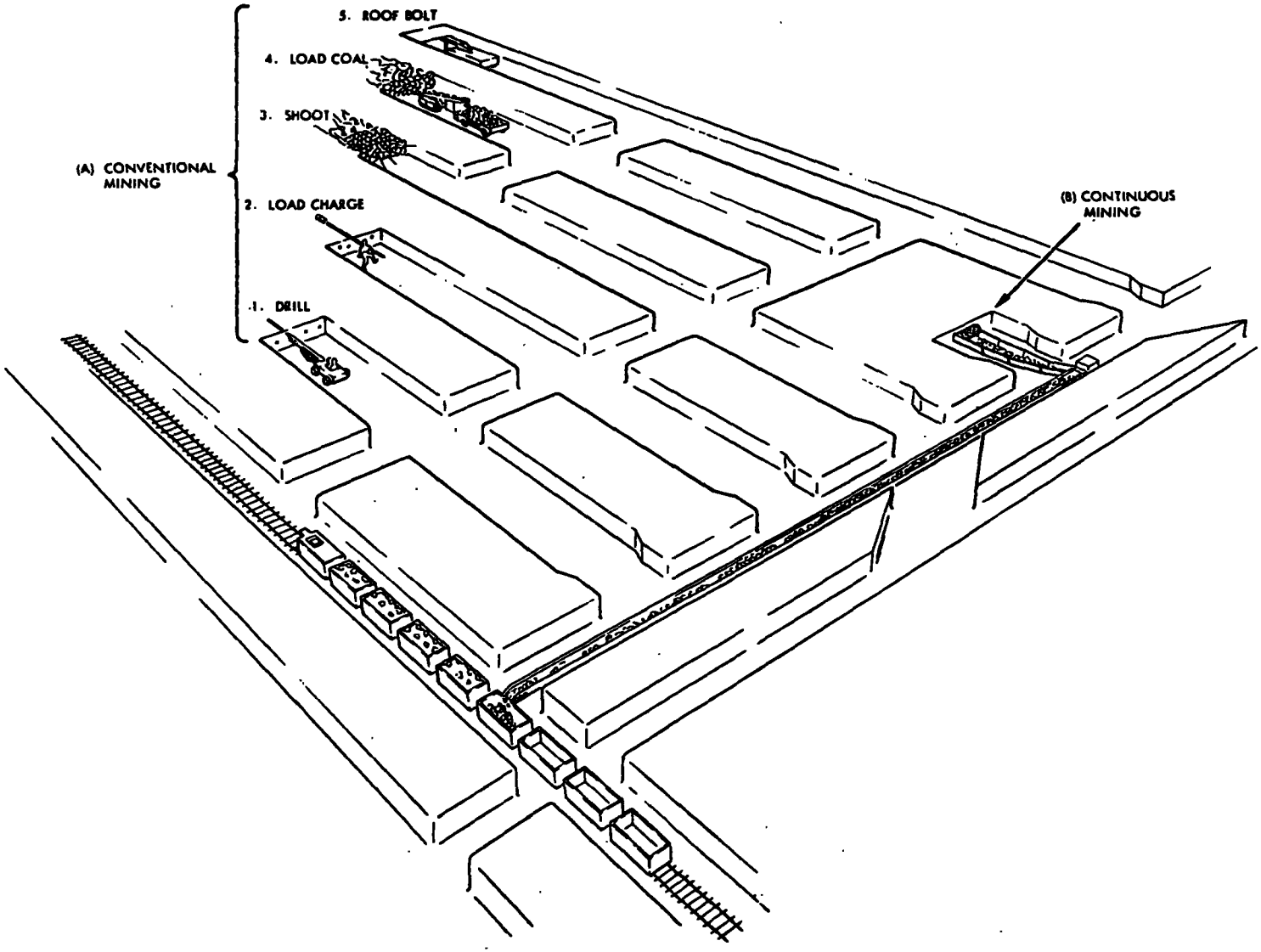

FIGURE 2.1-2 ILLUSTRATION OF ROOM AND PILLAR MINING USING CONVENTIONAL (BLASTING) AND CONTINUOUS MINING TECHNIQUES

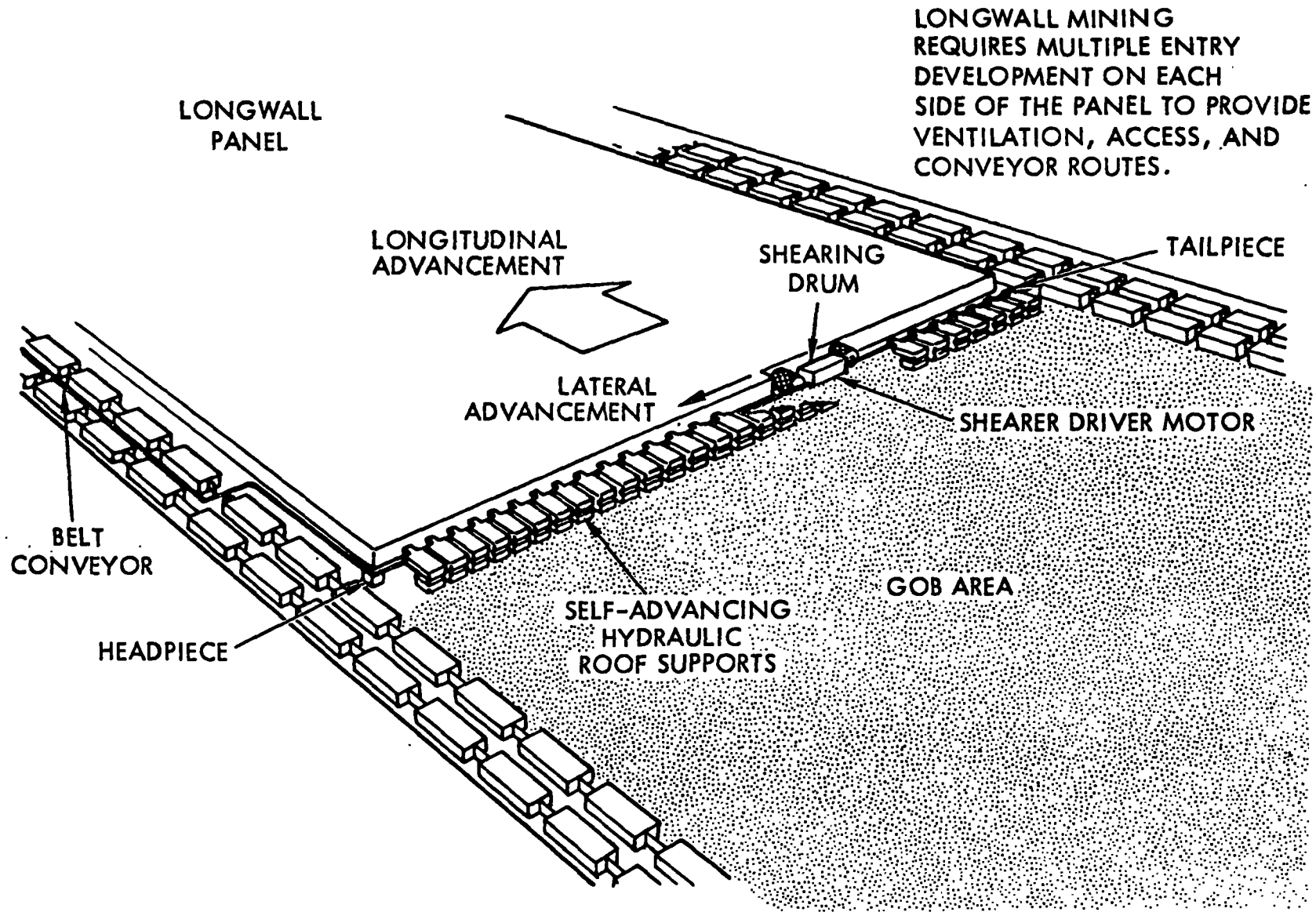

FIGURE 2.1-3 ILLUSTRATION OF LONGWALL MINING TECHNIQUE

from the seam. The coal is automatically loaded on a self-advancing conveyor and transported to the main conveyor or mine rail car train. The roof is supported at the mine face by self-advancing hydraulic roof supports. Behind the supports, the roof is allowed to collapse. The subsidence is sometimes enhanced by blasting to ensure a more controlled cave-in rate (TR-049).

The advantages and disadvantages of room and pillar conventional and continuous mining and longwall mining are given in Table 2.1-2 (TR-049).

Ventilation in the mine is generally provided by induced draft fans. At the mining faces where methane production is high, additional ventilation is required to maintain methane concentrations to less than 1.0 volume percent (TR-049). Dust in the mine is controlled by water or chemical sprays. Dusty conveyors, in particular, are covered to reduce emissions. If crushing is performed in the mine, dust emissions resulting from the crushers can be contained and controlled by fabric filters or wet scrubbers.

2.1.2 Coal Preparation Plant

The coal from the mine is hauled to the surface by conveyors or shuttle cars. In the case of shaft mines, skips are used to lift coal to the surface. On the surface, the coal is prepared to various degrees depending on the demand for various coals in the area. There are three types of coal preparation plants: (1) "complete preparation" - those that clean both coarse and fine coal, (2) "partial preparation" - those that clean only coarse coal, and (3) "coal crushing" - where the coal is merely crushed to a specific size (EN-220).

TABLE 2.1-2

COMPARISON OF CONVENTIONAL, CONTINUOUS, AND LONGWALL MINING

	LONGWALL	CONTINUOUS ROOM AND PILLAR	CONVENTIONAL ROOM AND PILLAR
Advantages	• Increases production • Eliminates some permanent roof support cost • Cuts cost of ventilation, storage, and rock dusting by 45%. • Provides better ventilation, roof support. • Requires less supervision. • Safer-superior method where roof conditions are poor.	• Involves fewer work cycles, less equipment, and normally produces more per man than conventional mining. • Permits more concentrated mining with fewer supervisory and ventilation problems.	• Effective in coalbeds with high hardness ratings, large partings* and varying dimensions. • Produces less fine coal. • Efficient where roof and floor planes undulate.
Disadvantages	• Requires large, level, straight blocks of coal free from obstructions with seam height minimum of 39". • Requires high capital investment for equipment. • Involves costly equipment moves (30-150 man-shifts to move 300 tons of equipment).	• Not effective where hardness ratings are high, partings* large, floor and ceiling planes undulate, and roof conditions are poor. • Not effective where seam heights vary greatly. • Cannot be used where coal size is critical. • Provides inefficient face haulage.	• Requires numerous work cycles. • Involves larger crew and more equipment with attendant supervisory and maintenance problems. • Produces less per man. • Provides inefficient face haulage. • Not efficient where roof conditions are poor.

*Partings are impure bands in coalbeds.

The first operation in all three types of preparation plants is crushing and screening of the coal. Crushing releases entrained impurities such as clay, rock, and other inorganic material, generally called ash. The coal is sometimes recrushed to ensure separation of these entrained materials. The coal is screened and routed to various cleaning processes or to storage bins depending on the sizes of the crushed coal. Cleaning processes are either wet, dry, or a combination of both.

Wet cleaning utilizes specific gravity differences between the coal and the separated materials. The coal along with the refuse after being crushed is submerged in an aqueous solution of predetermined specific gravity. These specific gravities range from 1.30 (approximately the specific gravity of coal) to as high as 2.00 (ZI-014). Generally, the lowest specific gravity will give the best separation of both the pyritic sulfur and the ash materials from the coal. This, however, results in a low total yield of coal. Finer crushing of the coal helps increase the yield while maintaining low sulfur and ash contents. It should be noted, however, that it is impractical to transport fine coal (1/4 to 3/8 inch) in open railroad cars due to windage losses and storage problems (ZI-014). The degree of crushing and the specific gravity of the floatation liquid is determined by the demand for specific quality coals. Further separation of smaller diameter coal and refuse ash can be performed by dense media cyclones or froth floatation units.

After the coal is wetted in the separation process, it is dried mechanically by dewatering screens which are followed by centrifugal dryers or vacuum filters for small particles. For finer coals with low moisture content (3 to 6 percent) secondary

drying by thermal dryers is required. Three types of thermal dryers are fluidized, flash, and multilouvered dryers. Fluidized bed types are used for approximately 67 percent of thermal drying applications (HI-083). In 1972, 18.2 percent of all mechanically cleaned coal was thermal dried (US-144). A complete wet cleaning system is shown in Figure 2.1-4 (ZI-014).

Dry cleaning of coal involves separation of the refuse ash from the coal by pulsating air on air tables (EN-220). The coal and refuse become stratified by the air into a bed with the heavier refuse on the bottom. The upper layer of coal is separated and stored in bins for loading on trucks, barges, or unit trains. The particulate emissions from the air tables are controlled by multiple cyclones followed by fabric filters. A typical dry cleaning process is shown in Figure 2.1-5 (EN-220).

2.1.3 Surface Mining

The two types of surface mining of coal are strip or area mining and auger or contour mining. These operations are briefly described below.

The conventional strip or area mine is used mainly in relatively flat terrain where the coal seam is parallel to the surface. This technique is ideal for western coals. The area mine is started with a box-cut or trench extending from one side of the vein to the other. If the overburden is rock or shale it will have to be blasted. Six-inch blasting holes are drilled to the coal seam in a square grid of 15 to 25 feet and a typical charge of 300 pounds of ammonium nitrate and fuel oil packaged in tubes is placed in the holes (ST-166). The blasting material is

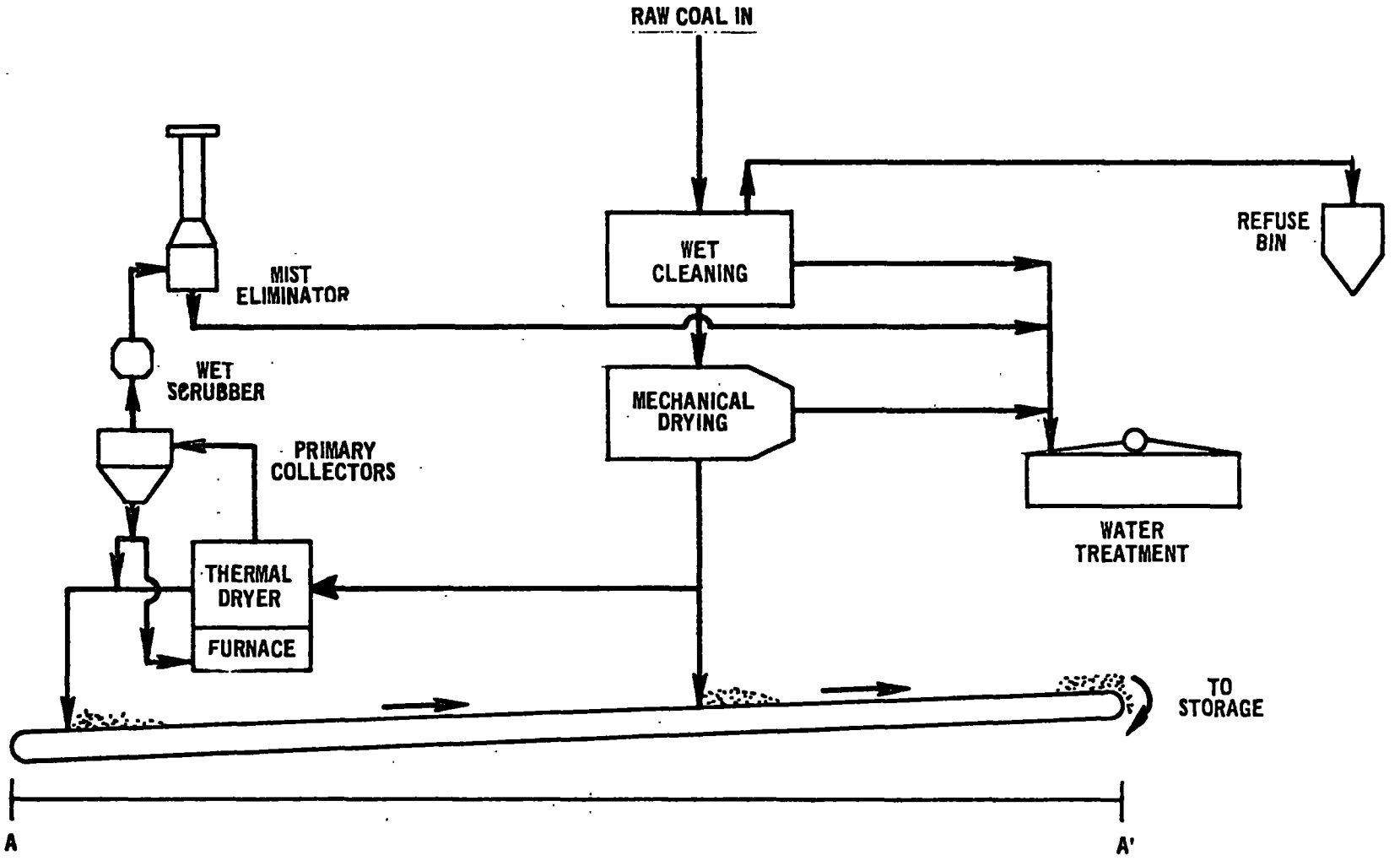

FIGURE 2.1-4 WET COAL CLEANING PROCESS

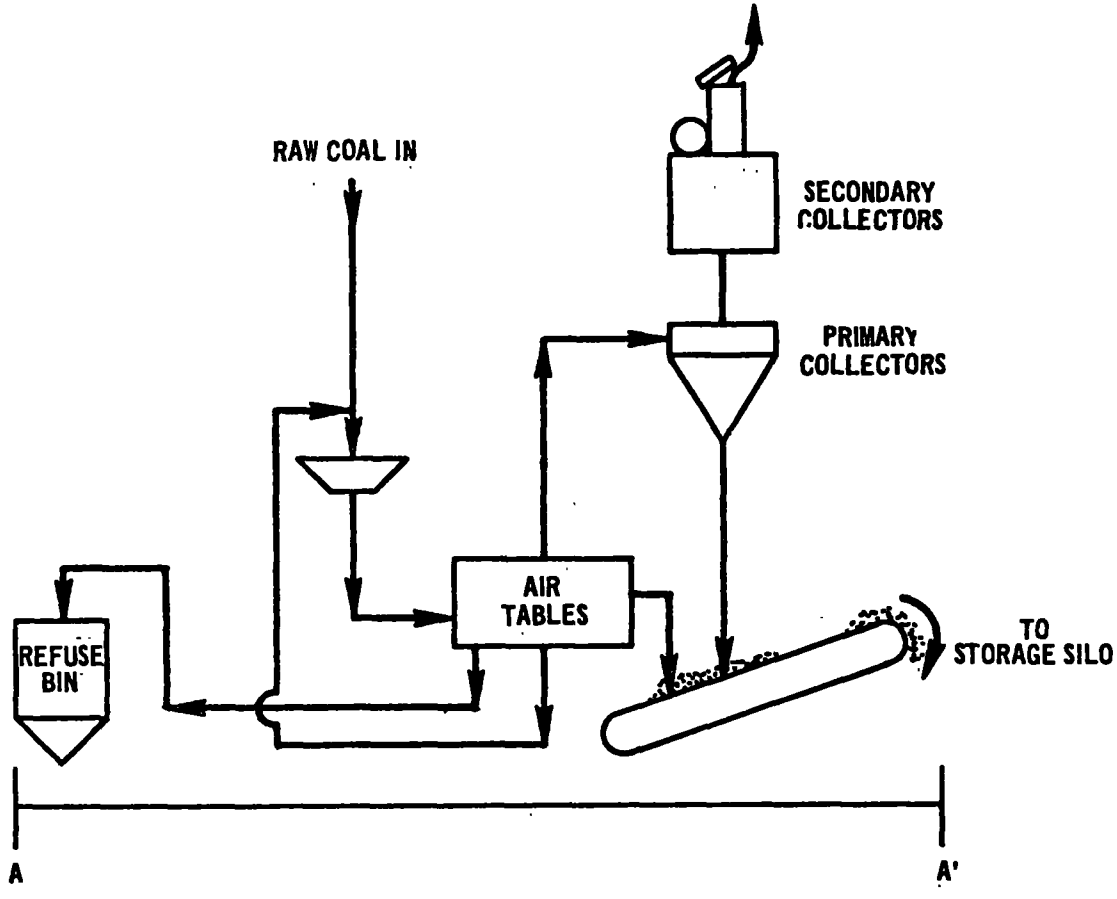

FIGURE 2.1-5 DRY COAL CLEANING PROCESS

detonated with electric blasting caps. The overburden is removed by electric- or diesel-powered stripping shovels or draglines. The uncovered coal is loaded by loading shovels into trucks or conveyors and transported out of the mine, after which the coal is crushed and may be mechanically cleaned. The overburden from each successive parallel cut by the stripping shovel or dragline is deposited on a spoil bank located in the preceding trench. Strip mining has a recovery rate of 80 to 90 percent with coal losses mainly due to spillage and losses in transit (ST-166). A typical area mining operation is shown in Figure 2.1-6 (EN-096).

The depth of overburden which can be removed economically will depend on the thickness of the coal seam. As a rule, area mining can be performed where overburdens are not more than 200 feet thick (ST-166). Greater depths may become economically feasible in the future depending on technology, economics, and environmental concerns.

Contour and auger mining are performed in hilly terrain. The contour mine is developed in the same methods as the area mine except that the mine is excavated in a path following the terrain of the particular area. The mining equipment used in contour mining is generally smaller than that used for area mining (ST-166). When the side walls of the mine become too high for strip mining, augers are used to recover additional coal. Large augers are driven horizontally about 200 feet into a coal seam (EN-096). Coal is recovered in a form of chips similar to wood chips from a drill bit. The introduction of dual and multiple augers has helped increase the percent recovery of coal from thin seams. The auger holes are backfilled by special compaction techniques. Recovery rates for auger mining are thought to be

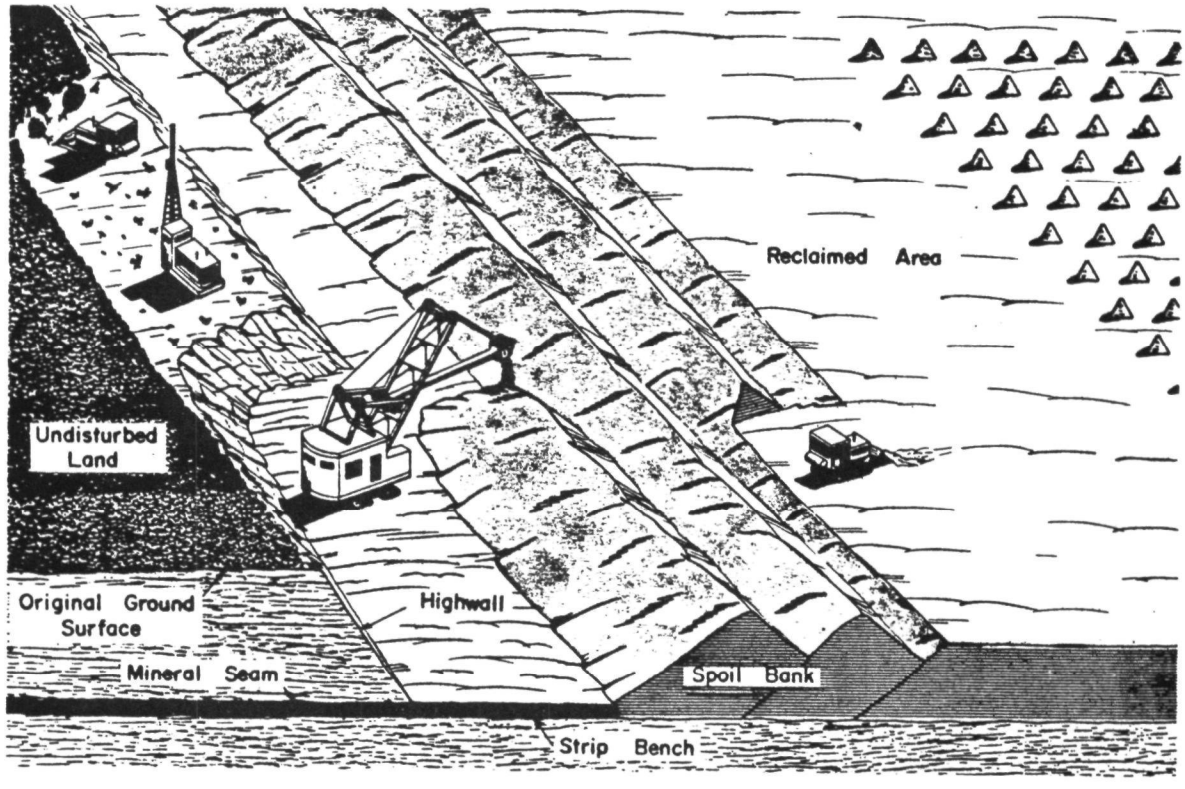

FIGURE 2.1-6 AREA MINING

around 75 percent but may be as low as 20 to 50 percent in actual operation (ST-166). The major losses are from coal left between the auger holes.

2.1.4 In-Situ Combustion of Coal

In-situ combustion of coal to produce a low Btu gas phase for utility power generation in the U.S. is in the pilot plant testing phase of development. The Bureau of Mines has performed numerous tests at an in-situ pilot plant located at Hanna, Wyoming (KA-124).

In-situ processing steps consist of pregasification followed by gasification and production. The main feature of pregasification is preparation of the bed by linking definable points in the coal seam such as the inlet and outlet boreholes or shafts. These linking processes generally increase the permeability of the coal bed and allow for a smoother and faster gasification process. Some coal seams are naturally quite permeable and do not require "pregasification." The majority of coal seams, however, do require some pretreatment. Methods of linking the desired points in the bed include electrolinking, pneumatic linking, and fracturing by hydraulic pressure, explosives, or possibly nuclear reaction (KA-124, GA-104).

Electrolinking is performed by passing a current through the coal seam carbonizing the coal. The rearrangement within the coal structure increases its permeability. Pneumatic linking involves pretreating the coal seam by passing high-pressure air through it before the gasification step. Fracturing the seam will obviously increase its permeability. Another possible linking method is simply drilling holes through the coal seam from the inlet air shaft to the existing gas shaft.

The gasification of the coal seam includes introduction of the gasifying agents, contacting of the agents with the coal, recovery of combustion products, and control of the process. The methods of gasification are classified as shaft-type, shaftless-type, or a combination of both. Shaft-type gasification requires the drilling of underground channels or passageways. Shaftless requires only surface drilling operations.

The gasifying agents used are oxygen, steam, and carbon dioxide. These gases are introduced in varying proportions and contacted with the pretreated coal seam. The oxygen is combusted with the carbon in the coal to form carbon dioxide. Water vapor reacts with the coal to produce carbon monoxide and hydrogen. Other reactions with the coal form more carbon monoxide, carbon dioxide, and hydrogen. The exiting gas contains carbon monoxide, carbon dioxide, hydrogen, water vapor, nitrogen, and various volatile organics from the coal seam (GA-104). The exiting gas stream will also contain heavier entrained hydrocarbons and hydrogen sulfide. The heavy hydrocarbons can be removed by a knockout tank while the hydrogen sulfide is removed by chemical treating such as amine absorption. A typical in-situ gasification process is diagrammed in Figure 2.1-7 (KA-124).

Experience with in-situ gasification has revealed the following areas of technical difficulty (GA-104, KA-124):

(1) the heating value of gas is low and tends to decrease with time,

(2) gas leakage from the gasification area is common,

No. 3,734,180 (May 22, 1973) V.W. Rhoades, Cities Service Oil Company

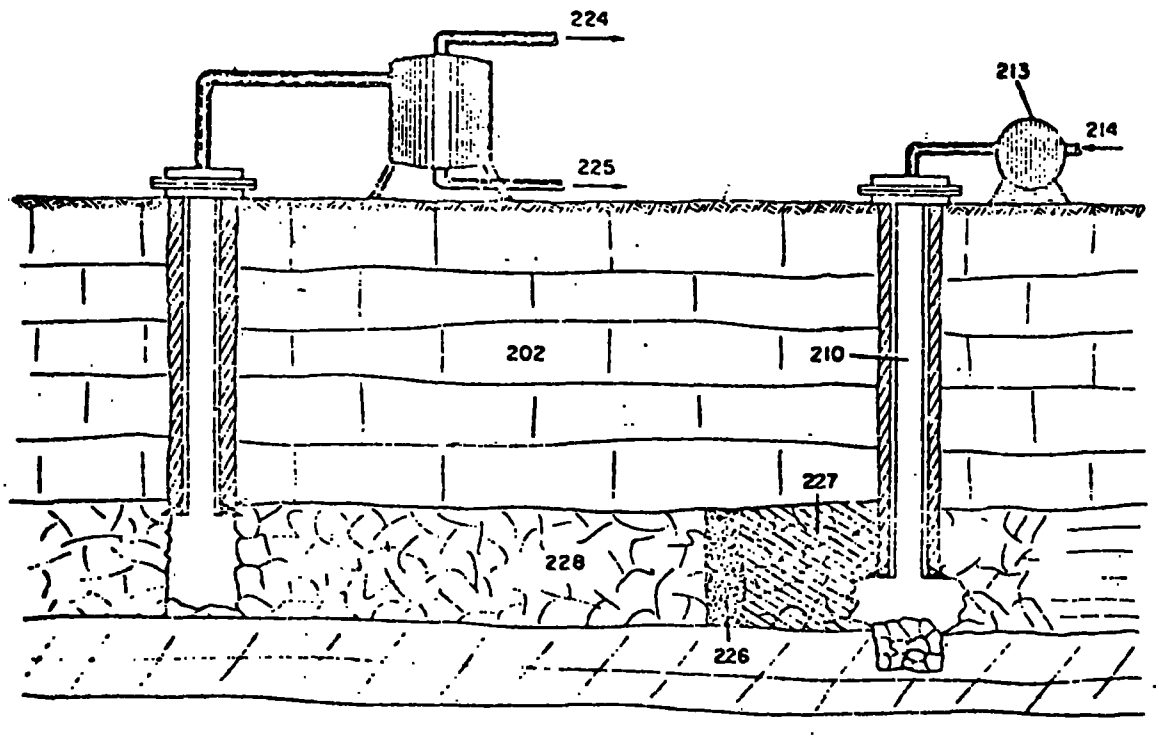

202 Overburden
210 Injection Well
213 Compressor
214 Fuel Gas and/or oxidizer
220 Production Well
228 Crumbled Coal
226 Combustion Front
227 Charred Residual
224 Fuel Gas Product
225 Coal Tar Products

[57] **ABSTRACT**

Two or more wells are drilled into a coal seam. The wells are completed so as to isolate all other strata from the coal seam and a radially extended horizontal fracture is directed by introduction of a non-hypersensitive explosive under hydraulic fracturing conditions so as to connect the wells communitively. The explosive is ignited so that a horizontally and vertically directed fracture network is formed within the coal system. A combustion front is ignited and propagated through the fractured network to produce combustible gases and coal tar liquids.

3 Claims, 2 Drawing Figures

FIGURE 2.1-7 U.S. PATENT ON IN-SITU GASIFICATION OF COAL UTILIZING NON-HYPERSENSITIVE EXPLOSIVES

(3) the net percentage of coal energy recovered is small,

(4) the groundwater can penetrate the gasification zone and extinguish the process combustion,

(5) the burned-out area can collapse causing surface subsidence problems,

(6) the flame front is hard to control directionally, and

(7) the coal beds are often not uniform; combustion generally occurs with a poor burning front.

Despite these disadvantages, in-situ coal gasification has the following advantages over conventional mining (GA-104):

(1) the cost of equipment is much less,

(2) underground labor and its inherent hazards are eliminated, and

(3) coal seams which are deep and otherwise unminable can be recovered by in-situ gasification.

2.2 Oil Shale Extraction

Oil shale mining procedures consist of basically the same techniques that are utilized in coal mining. The main differences between the two industries are based on the massive solids handling problems associated with oil shale extraction. A typical oil shale deposit may contain 30 gallons of oil per ton of shale. Approximately 73,700 tons per day of this raw shale must be extracted to support a 50,000 bpd upgrading or refinery facility.

Oil shale production methods include underground (room and pillar) mining, surface mining, and in-situ oil shale processing. In-situ processing is still in the developmental stage. Room and pillar mining and surface mining are the more advanced procedures since these methods rely on more conventional extraction techniques.

Depending upon the physical characteristics at the particular oil shale site, oil shale may be mined by either surface or underground methods. Most actual experience with oil shale involves underground mining. Underground mining techniques are more universally applicable to the various oil shale deposits than surface mining, and as a result probably will be extensively utilized in the development of a shale oil industry. The Bureau of Mines has demonstrated the feasibility of room and pillar mining for oil shale at its facility near Rifle, Colorado.

2.2.1 Room and Pillar Mining

In room and pillar mining, pillars of shale are left in place at appropriate intervals within the mine to provide roof support. A schematic view of the room and pillar mining

technique is shown below in Figure 2.2-1. Due to the large amount of shale that must be extracted in order to produce a significant amount of oil, room and pillar shale mining is more like an underground quarrying operation. A typical raw shale bed is 40 feet thick with a density of 90 lb/ft^3 (US-093). Underground extraction is estimated to be capable of removing approximately 65% of the shale from a typical mine (HI-083).

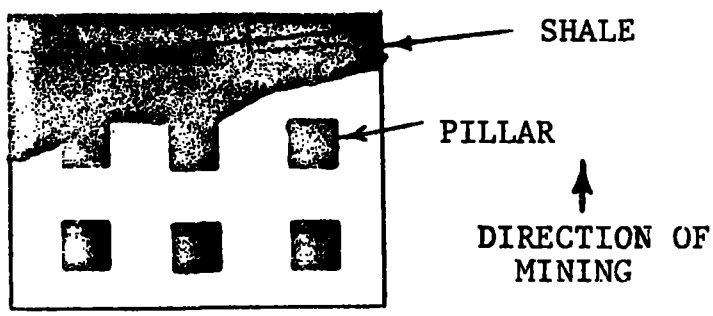

FIGURE 2.2-1 ROOM AND PILLAR MINE

The normal mining method is to mine one side of the mine on the advance to the tract limits, and mine the remaining side on the retreat. Production panels would typically be mined in a 30-foot-high-heading with a 20-foot-high-bench. Rooms and pillars would be 60 ft wide.

Extraction is accomplished by drilling and blasting the shale. The broken shale is loaded onto diesel trucks and transported to a portable crusher. Crusher discharge is conveyed to underground storage bins. From the storage bin, shale is transported to secondary crushers on the surface.

Mine ventilation is accomplished by fans located in the shale hoisting shafts. All atmospheric emissions exit the mine with this ventilated air stream. Emissions within the mine result from the drilling and blasting operation, the diesel powered trucks, and the primary crusher. Fugitive dust within the mine may be controlled by water sprays, while particulates from the primary crushers may be reduced by use of water scrubbers or bag filters.

Water resulting from mine drainage and shale pile run-off is routed to evaporation, containment ponds. This water may be used for road dust control, shale pile wetting, and particulate control systems. If the mine is close to the upgrading facilities, the mine water may be clarified and used as make-up water for the upgrading facilities. Water initially pumped from the mine should be of good quality; however, the water salinity will probably increase with mine life. Another potential demand for mine water is the reclamation operation. Water demand for revegetation is not well defined. The water allocated for revegetation in the environmental impact analysis for the TOSCO II Parachute Creek Plant is 700 gpm (CO-175).

A major problem associated with oil shale extraction involves solids waste handling and ultimate disposal of the spent shale. Most shale oil production schemes plan to utilize the mine site for disposal of some of the processed shale from the retorting facility while the remaining spent shale will have to be landfilled elsewhere. Approximately 90 wt % of the shale remains after extraction and is returned to the mine as spent shale. However, even with maximum compaction, the shale increases in size by about 12 vol % during processing (US-093). Still, about 60 percent of the processed shale may be back-filled in an underground mine substantially reducing the surface disposal impact. This is a major advantage of underground over surface mining. The exact amount of back-fill depends on the type of spent shale, degree of compaction, moisture content, and mine volume used.

Spent shale may be returned to the mine by trucks, conveyors, or a slurry piepline. If slurried, the slurry water has to be collected in the mine and returned to the surface.

The portion of the spent shale that cannot be accommodated underground must be contained on the surface. Although the fixed-land requirement for an underground mine is only about 10 acres, land must be available for disposal of both the overburden from the mine opening and the spent shale. Land requirement for an underground mine is determined from estimates for an underground mine capable of supplying shale for a 50,000 bpd shale oil facility (US-093). An estimate of the land impact is as follows:

(1) mine development: 20 acres

(2) solid waste disposal assuming 60% return of processed shale underground: 51 acre/year

(3) crushing facilities: 40 acres

Assuming a thirty-year mine life, the total land impact is 1600 acres.

Surface disposal of solid waste may be achieved by either containment (box canyons) or reclamation. Land reclamation and revegetation is a desirable method for reducing the land impact of the shale oil industry; however, procedures required to properly restore and revegetate the land have not been adequately defined. Total cost, time, and water requirements have not been accurately established.

2.2.2 Surface Mining

Surface mining consists of removal of the overburden followed by mining of the underlying oil shale in a quarry-like operation. Factors effecting the suitability of surface mining are the ratio of the overburden to the shale to be mined and the availability of a disposal area for the overburden. Surface mining has the advantages over underground mining of being accomplished at a lower cost and with less manpower (HI-083, and being inherently safer. Unfortunately, potential sites for surface mining are limited. Another disadvantage is a high land impact since all of the spent shale and solid waste must be handled on the surface.

Overburden at potential surface mining sites ranges from 100 feet to 800 feet in depth, averaging approximately 450 feet. Due to the required mine depth, several bench levels must be provided to develop sufficient working forces to meet production rates. An average mine slope of 45° with a working slope of 35° is typical (US-093). Overburden and shale is extracted by drilling and blasting. Blasted raw shale is hauled by trucks to primary crushers in the pit. Shale from the crusher is removed from the mine by conveyor to secondary crushing and screening facilities. The secondary crushing and screening facilities may be located at the upgrading plant site. Major processing steps associated with a surface mining operation are shown in Figure 2.2-2.

Emission sources associated with the surface mining facilities include excavation blasting, road dust from transportation of oil shale and overburden, combustion emissions from

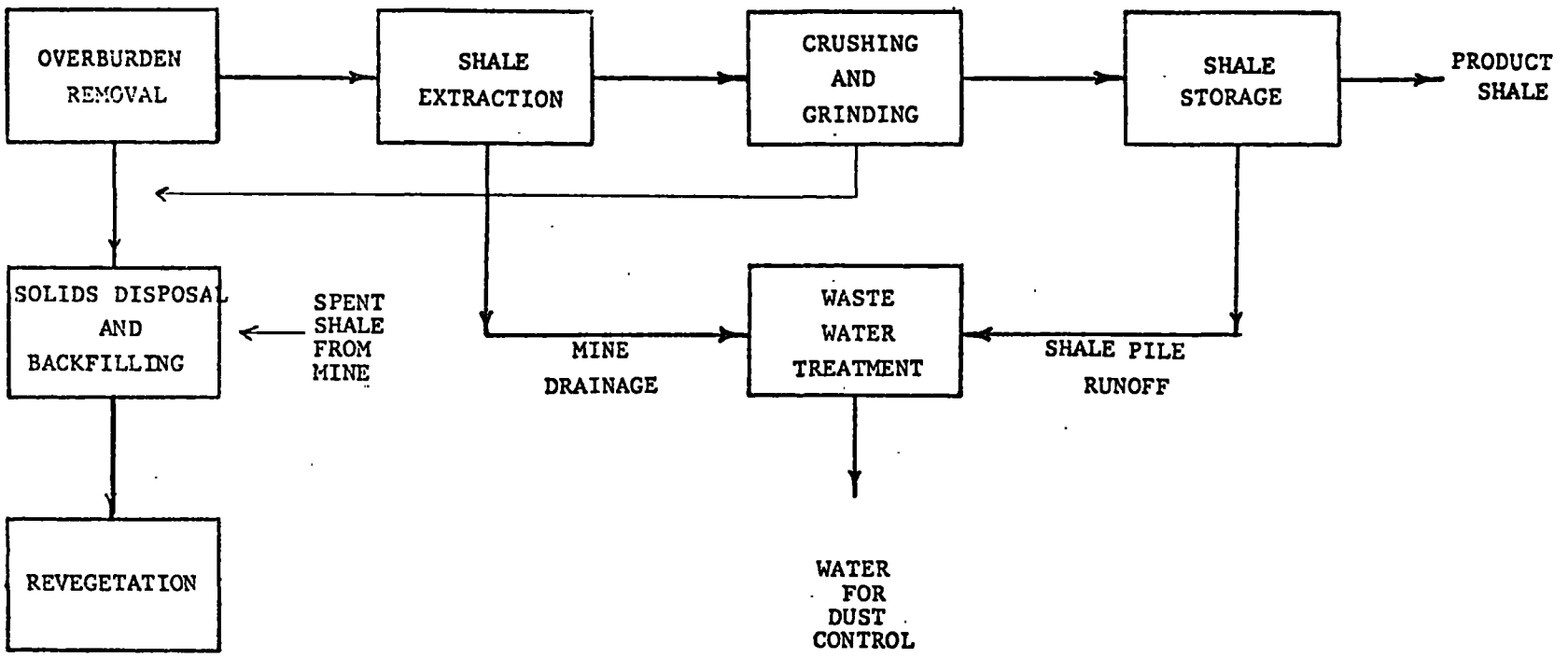

FIGURE 2.2-2 STEPS INVOLVED IN OIL SHALE SURFACE MINING

diesel-powered equipment, and primary and secondary crushing operations. Primary control for fugitive dust is by water spraying. Particulates generated in the crushing operations may be reduced by wet scrubbers or fabric filters.

Water resulting from surface mine drainage and shale pile runoff is also routed to evaporation/containment ponds. Potential uses for this water have been previously noted for underground mining (Section 2.2.1).

A major problem associated with surface mining is solids disposal. Overburden as well as processed shale must be disposed of on the surface. Initially overburden and spent shale is hauled off site to some containment area. Overburden may be removed to the containment site by trucks or conveyor. Spent shale may be returned to the containment area by truck, conveyor or slurry pipeline. Only after mined-out areas of the pit become available can backfilling begin. Since solid waste cannot be disposed of underground, the land impact associated with surface mining is higher than room and pillar mining.

The land requirement for a surface mine producing shale for a 50,000 bpd upgrading facility is determined from estimates for a surface mining operation for a 100,000 bpd shale oil facility (US-093). An estimate of the land impact is as follows:

(1) mine development: 28 acres/year

(2) permanent overburden disposal: 500 acres

(3) low-grade shale storage: 75 acres

(4) disposal of spent shale: 73 acres/year

Assuming a 30-year mine life, the total land impact is approximately 3600 acres. A land reclamation/revegetation operation should be part of a surface mining operation; however, reclamation procedures are still in conceptual and developmental stages. Reclamation requirements in terms of cost, equipment, time, and water have not been accurately established.

2.2.3 Sizing Operations

Sizing operations which may be performed on raw shale include primary, secondary, and tertiary crushing, screening and briquetting. The amount of sizing required depends upon the specific retorting process being utilized. Retorts that rely on solid-solid heat transfer require a smaller size feed than retorts which rely on gas-solid heat transfer. The TOSCO II retort requires that the shale be ground to less than 0.5 inches while Union and Gas Combustion retorts can accommodate ore up to 3.5 inches. Typical operations in a shale sizing facility are shown in Figure 2.2-3.

In order to minimize costs of transporting the raw shale, the crushers are located close to the blasting operation, usually within the room and pillar mine or in the surface mining pit. From the primary crushers the shale is conveyed to secondary and tertiary crushers outside the mine or pit. The remaining sizing operations may be performed either at the mine site or at the retorting site.

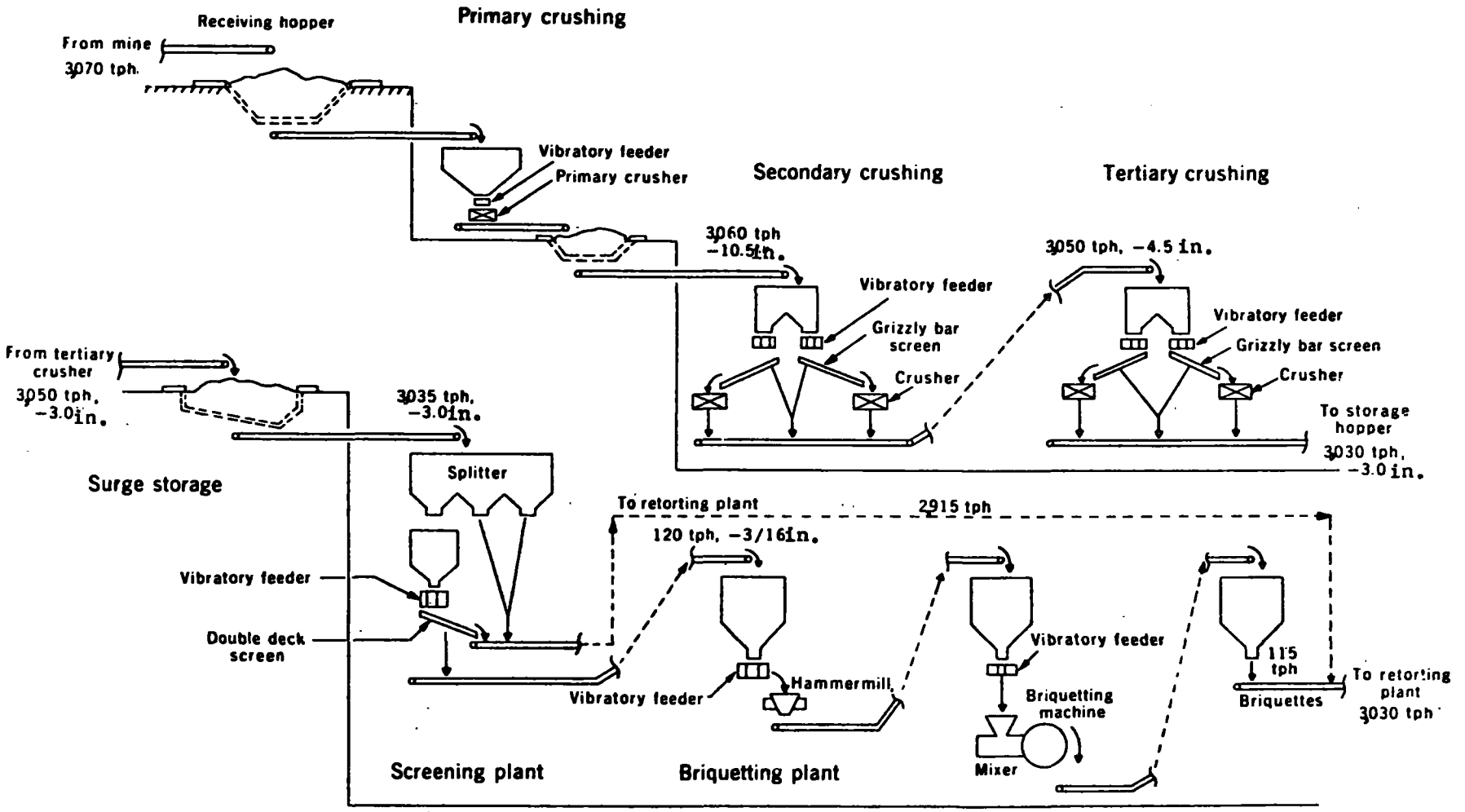

FIGURE 2.2-3 SHALE SIZING OPERATIONS

Source: US-093

After secondary and tertiary crushing the shale is conveyed to shale storage hoppers. From the storage hoppers the shale may be fed directly to the retort. Pieces of the oil shale which are too small for direct feeding are separated from the larger shale by a screening process, crushed to very small pieces with a hammermill, and then compacted into briquettes suitable for routing to the retort along with the other shale feedstock.

The entire sizing facility is a potential source of fugitive dust emissions. Particulate control techniques such as water spraying and shale wetting must be utilized as well as control systems such as wet scrubbers or bag filters in order to minimize dust emissions.

2.2.4 In-Situ Processing

In-situ processing schemes have been proposed for retorting the shale in place, thus avoiding the solids handling problems associated with the more conventional mining techniques. In-situ processing involves fracturing the shale, injection of retorting fluids, retorting of the shale in place, and recovery of the product. This technique is still in the development stage. Many approaches to achieving efficient in-situ retorting are being investigated; however, no full-scale commercial units have yet been constructed.

Potential methods for preparation of the shale bed include hydraulic, electrical, chemical explosive, and nuclear fracturing. Once the shale is fractured a retorting fluid (hot gas or steam) is introduced through injection wells. The gas is injected at a sufficient rate to maintain a satisfactory temperature and/or flame front within the shale formation. The

shale is brought to the retorting temperature (900°F) and the kerogen is converted to a liquid shale oil. The hot gases create a pressure differential within the formation forcing the shale oil vapors to the producing wells. Product is brought to the surface as a gas with entrained liquid through a row of production wells parallel to the injection facilities. A schematic view of an in-situ processing operation is shown in Figure 2.2-4. The parallel rows of wells (injection and production) will be moved across the shale tract as the in-situ processing progresses. An illustration of this progress is shown in Figure 2.2-5.

Once the product is brought to the surface, conventional oil processing can be used. Liquids pumped from the shale and removed from the off-gas stream are routed to the upgrading facilities. The off-gas stream, which has a heating value of approximately 30 Btu/scf is primarily recycled into the shale formation. The gas which, for practical reasons, is not injected is treated for acid gas removal and flared.

The only emission sources associated with this oil shale mining process are the flared gas and fugitive emissions resulting from retort combustion gases, leaks of volatile shale oil, and dust from unpaved roads. Emission from the flared gas may be controlled by conventional stack gas control methods while road wetting can be used to reduce the fugitive dust emissions. Good housekeeping techniques will minimize the fugitive combustion gas and shale oil emissions.

FIGURE 2.2-4

SCHEMATIC REPRESENTATION OF AN IN SITU RETORTING OPERATION

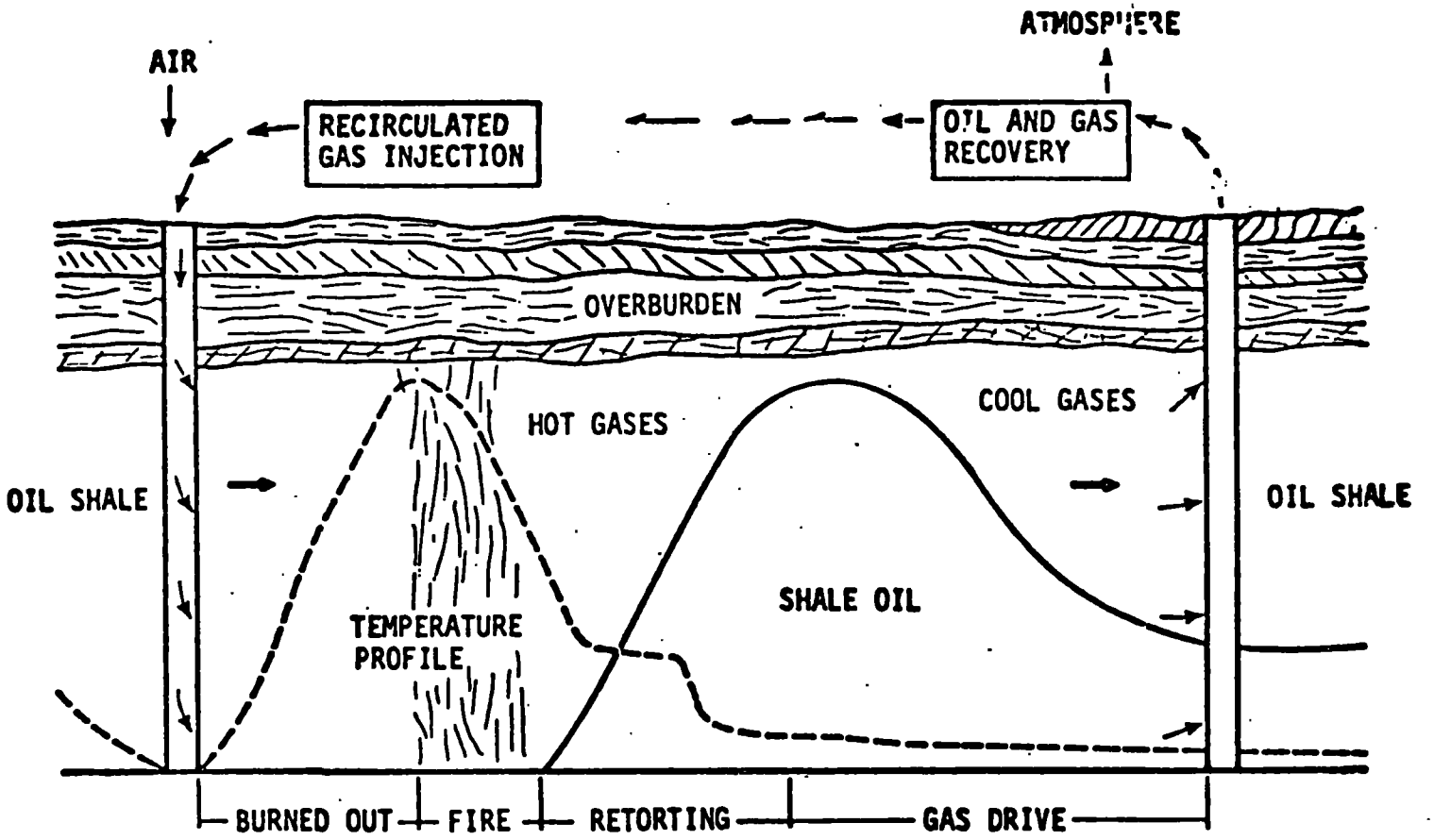

Source: (EN-204)

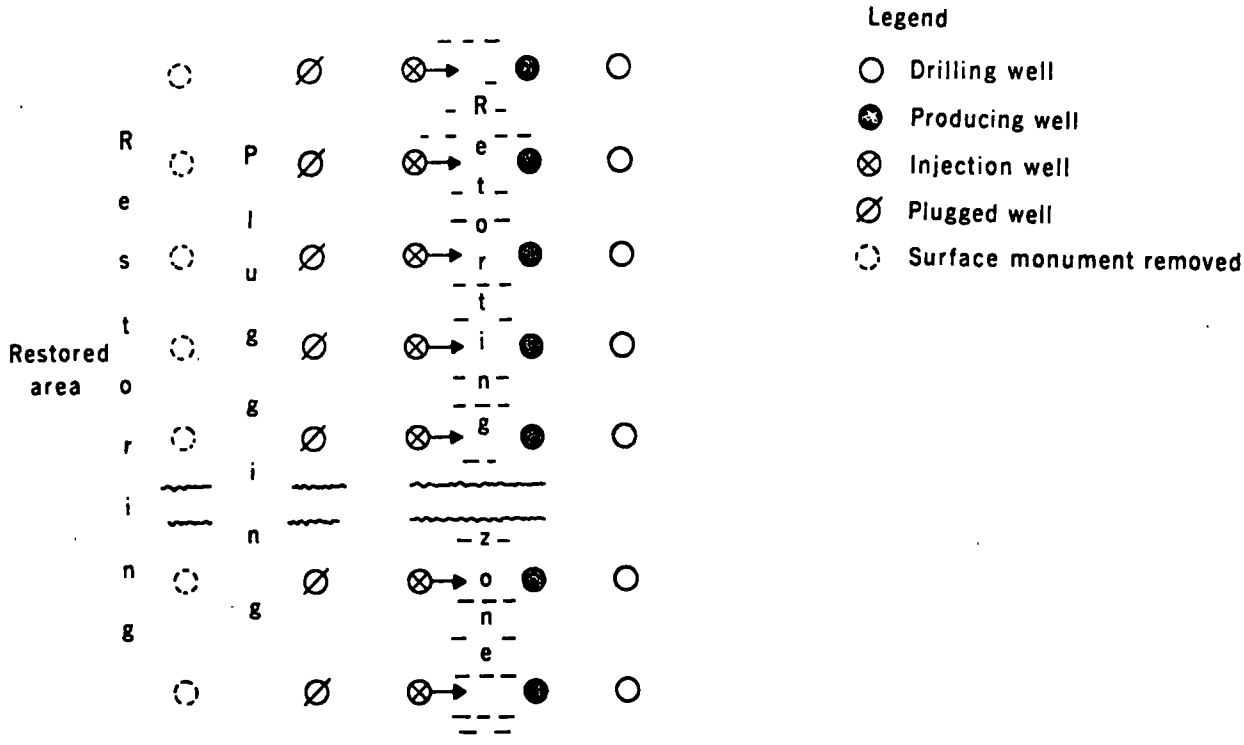

FIGURE 2.2-5 WELL MOVEMENT IN IN-SITU SHALE PROCESS

The major problems associated with the development of in-situ oil shale processing include improving:

- methods of artificially inducing sufficient permeability to allow effective passage of gases and liquids,

- control of the process from the surface, and

- product recovery methods.

2.3 Oil Production

The modern day oil production facility has been engineered to be a high recovery, nonpolluting operation. Many old and proven techniques such as gas-lift and plunger-lift production operations are still being used. Newer technology involving secondary and tertiary recovery methods along with safeguards against potentially hazardous pollution have received considerable attention in recent years. This report deals only with surface operations of oil production.

2.3.1 Oil Removal

Although many options are available, the processing sequence for an oil production facility is reasonably straightforward. The first step is removing the oil from the wellhead. The oil can be removed by the three methods shown in Table 2.3-1. Emissions from the wellhead operations will depend on the type of prime mover involved in the pumping operation. Natural flow involves no prime mover and thus will emit only fugitive losses characteristic of hydrocarbons in the crude oil.

Plunger lift, which includes the conventional sucker-rod pump and the hydraulic pump, or gas lift will require a prime mover for either pumping or compressing. A list of available prime movers is shown in Table 2.3-2 (FR-121). The electric motor is the most convenient, and it is emission free. However, electricity may not be available, in which case internal combustion-type engines are often used. Common fuels used in internal combustion-type engines are natural gas, refinery gas, LP gases (butane and propane), diesel fuel, and light fuel oils. Fuels found to be unsuitable are direct well gases which are

TABLE 2.3-1

OIL PRODUCTION OPERATING OPTIONS

Well Head

1) Natural Flow
2) Plunger Lift
3) Gas Lift

Gathering System

1) Direct Flowing
2) Heated for Heavy Crudes
3) Pressure Reduction

Emulsion Breaking

1) Gravity
2) Electrical
3) Heater Treater

Water Knockout

Oil-Gas Separation

1) 2-Stage
2) 3-Stage
3) 4-Stage
4) Single Storage Tank

Storage

1) Bolted Steel Tank
2) Wooden Tank
3) Welded Steel Tank
4) Plastic Tank
5) Cone-bottom Tank

Automatic Transfer

1) Meter Type
2) Volumetric Dump

Water Treatment

1) Floatation Cell
2) Aerated Lagoons
3) Evaporation Ponds

Secondary Waste Water Treatment

1) Filtration
2) Degassing
3) Aeration

Injection

1) Flood Water
2) Steam
3) Solvents (i.e., alcohol)
4) Surfactants
5) High Pressure Miscible Gas
6) Polymers
7) High Pressure Air with In situ Combustion

TABLE 2.3-2

CLASSIFICATION OF PRIME MOVERS

1. Slow-speed* single- or twin-cylinder two-cycle gas engines

2. Slow-speed single cylinder four-cycle gas engines

3. High-speed** multiple-cylinder four-cycle gas engines

4. Slow-speed diesel or oil-burning engines

5. High-speed diesel engines

6. Electric motors

*Slow-speed is 750 rpm or less.

**High-speed is 750 rpm or greater.

SOURCE: FR-121

"wet" or gases which contain over 2 percent sulfur (FR-121). Most fuels require some type of on-site storage.

The oil from the wellheads is brought together to a central oil-water-gas separation facility by a gathering system consisting of piping from the wellheads and a central collecting manifold. The simplest gathering system is a direct flow system where oil from the wells is merely piped to a common manifold and then on to the separation facility. This system works for wells operating essentially with equal producing pressures. If pressures are not equal, a gathering system which provides for pressure reduction before entering the manifold is employed. If the wells are producing heavy crudes, and especially if steam injection is being used, the gathering system may have to be heated by some means such as steam tracing in order to keep liquids flowing in the lines.

2.3.2 Brine Removal

The brine and oil from the oil field is usually in an emulsion form. This emulsion must be broken before the brine content in the crude can be reduced to an acceptable level of about two weight percent. This operation consists of destabilizing the film between the oil and water droplets, coalescence of the oil droplets, and gravitational separation of the oil and water phases. The dehydration processes have residence times of around twenty minutes (CH-182). The four methods used in dehydrating emulsions are (1) heating, (2) chemical treating, (3) electrical, and (4) gravity settling.

Heater treaters are commonly used for emulsion breaking. The brine-oil emulsion is destabilized simply by the application of heat. The heaters are often direct-fired, although indirect-fired ones are also available (CH-182). A typical heater treater is shown in Figure 2.3-1 (FR-121).

Chemical treating is performed by altering the chemical compositions at the interfacial film and destabilization by surface-active agents. Separation can be enhanced by addition of heat and is completed in some type of gravity settler.

Electrical dehydrators include a preheating step to reduce the viscosity of the crude, followed by exposure of the crude to a high-voltage alternating electrical field. The electrical field causes the polar water particles to increase their random motion, thus enhancing their coalescing properties. An electric dehydrator is shown in Figure 2.3-2 (CH-182).

Gravity settling is usually performed in a wash tank. The wash tank has three parts: (1) a bulk separator for free gas, (2) a bulk separator for free water, and (3) a quiescent tank for settling of suspended solids and water droplets. The bulk gas separator is usually a gas "boot" located in the inlet line to the wash tank. The bulk separator for free water is the lower section of the wash tank while the quiescent tank for settling of suspended solids and water droplets is the upper section of the tank. A typical wash tank is shown in Figure 2.3-3 (FR-121). A wash tank may be used as a knockout tank before or after a heater treater, chemical dehydrator or electrical dehydrator.

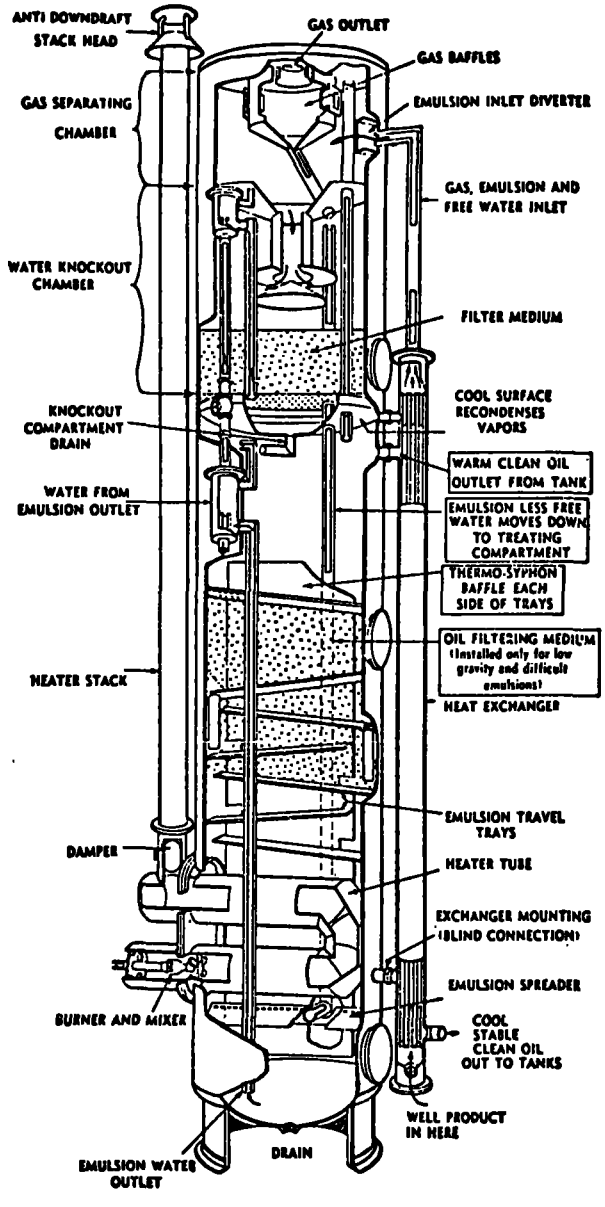

FIGURE 2.3-1 HEATER TREATER

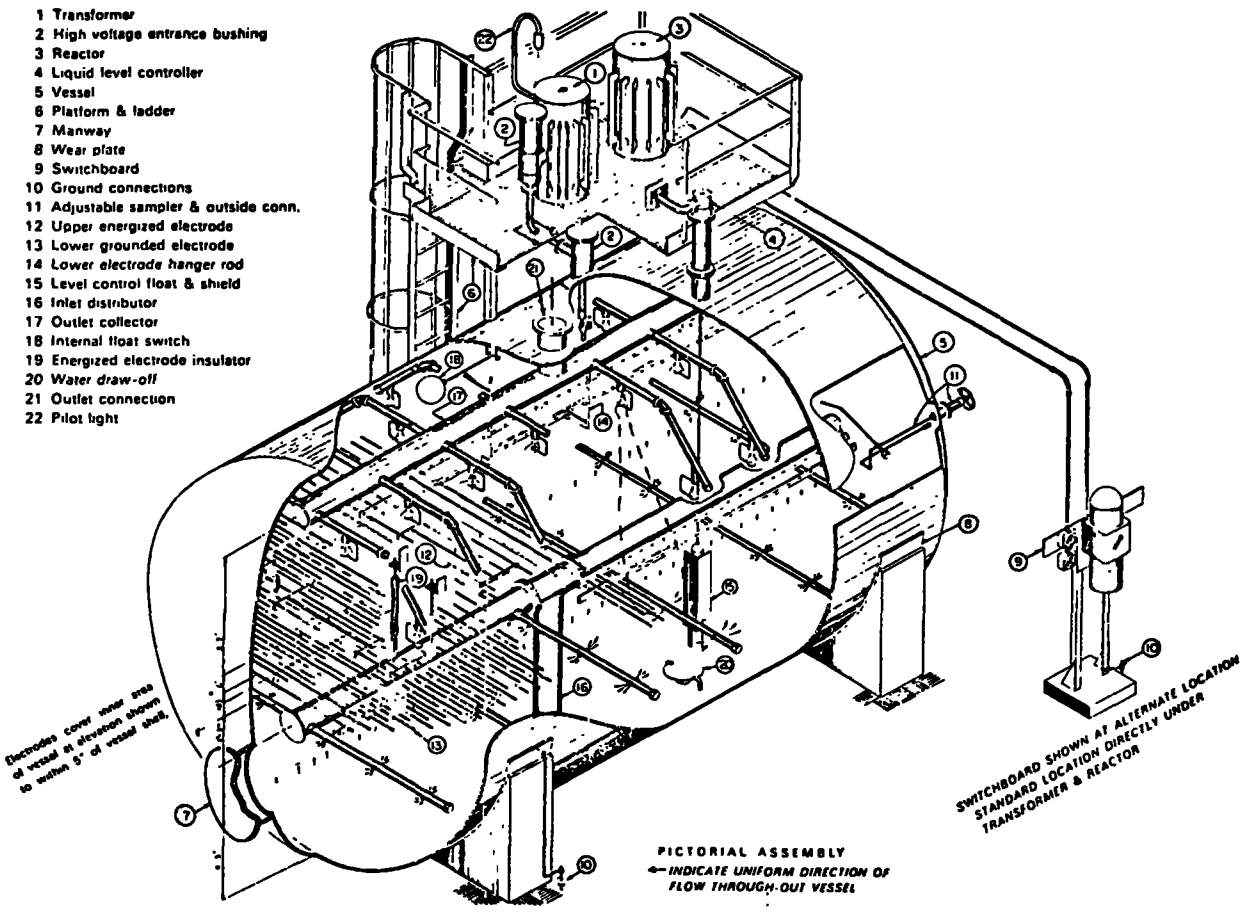

FIGURE 2.3-2 PICTORIAL ASSEMBLY OF PETRECO ELECTRIC DEHYDRATOR

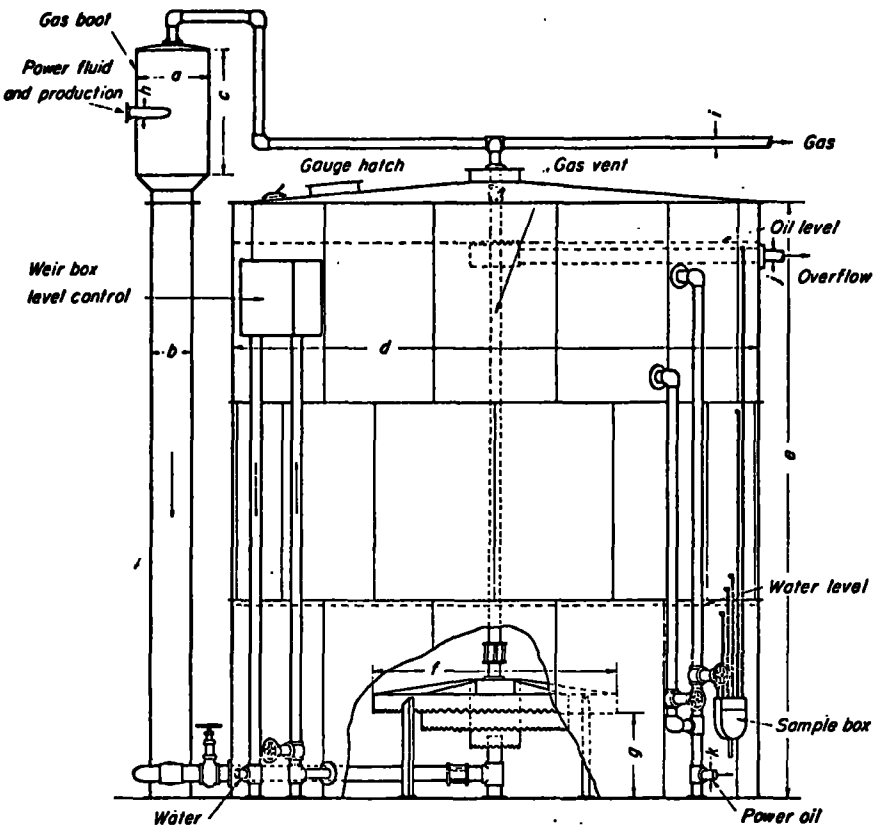

FIGURE 2.3-3 WASH TANK

2.3.3 Oil-Gas Separation

After the brine has been removed to an acceptable level, the oil and gas are separated. Oil and gas separations are classfied as to the number of stages, the shape, and the number of phases separated. The number of stages is determined by the pressure of the incoming oil and gas mixture. For high-pressure fluids a greater number of stages will be required. Very low-pressure crudes may be routed directly to a storage tank which is considered as one stage of oil and gas separation.

Separators are horizontal, vertical, or spherical. The shape is determined by the oil to gas ratio. For high oil to gas ratios horizontal separators are used, and for low ratios vertical separators are used. Spherical separators are used for intermediate ratios. All three types of separators are shown in Figure 2.3-4 (FR-121). Separators are either two- or three-phase units. In two-phase units only oil and gas are separated while three-phase units separate oil, gas, and water. The gases recovered can be segregated as to pressure or as to "wetness" ("wet" gases are those containing condensable hydrocarbons). The recovered gas is piped to a gas treating plant for further sweetening and purification. In remote areas, the off-gas may be reinjected or flared.

2.3.4 Crude Storage

The final dehydrated and degasified crude is held in surge or storage tanks to await shipment via pipeline, train, barge, or tanker. The most common storage tank is the bolted steel tank. This type of tank has the advantage of being easily

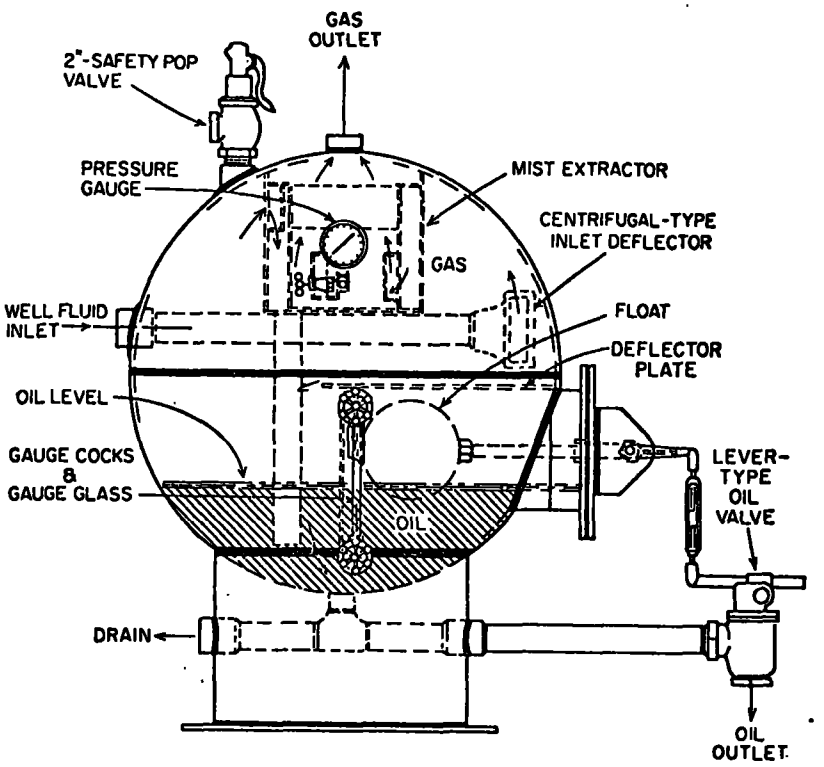

Schematic diagram of typical spherical two-phase oil and gas separator with float-operated lever-type oil control valve.

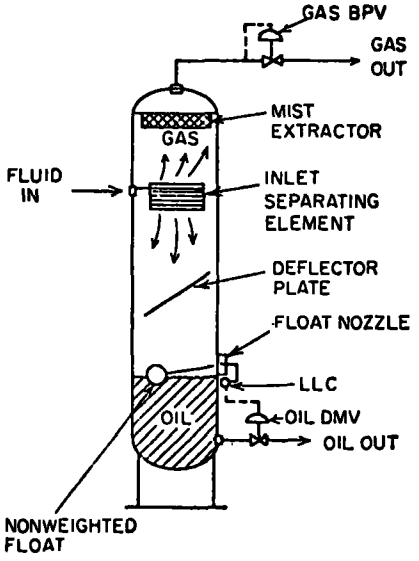

Schematic diagram of typical vertical two-phase oil and gas separator.

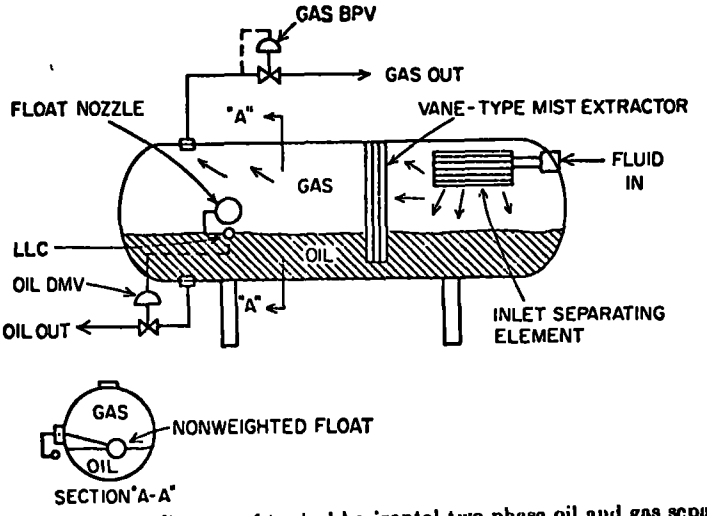

Schematic diagram of typical horizontal two-phase oil and gas separator.

FIGURE 2.3-4 OIL-GAS SEPARATORS

transported, dismantled, and repaired. A bolted steel tank is shown in Figure 2.3-5 (FR-121). Other types of tanks which can be used are wooden, welded steel, plastic, and cone-bottom tanks. A tank battery should contain at least two tanks and usually have a capacity equal to four days' production (FR-121).

With the increase in value of lighter hydrocarbons, the recovery of these hydrocarbons has become economically feasible. Installation of floating roof tanks or some type of floating covers reduces hydrocarbon emissions from tanks. Vapor recovery systems can also be used to recover vapors but are more expensive than floating roofs. Vapor recovery systems have the advantage of being able to recover vapors from other sources such as dehydration or loading facilities. A schematic flowsheet for a typical vapor recovery system is shown in Figure 2.3-6.

If the crude is to be transported by pipeline, the crude from the storage tanks is transferred by a lease automatic custody transfer (LACT) system. There are two types of transfer units: the meter type and the volumetric dump. In the meter type the oil is deaerated and then run through a metering system to determine the volume. The volumetric dump determines the oil volume through alternately filling and dumping calibrated tanks. Both units also automatically sample the crude for residual basic sediment, water content, and oil gravity (CH-182).

2.3.5 Water Treating

The water from the dehydrator, knock-out tanks, and three-phase separators, if used, must be further treated before being discharged as waste water or reinjected back into the well

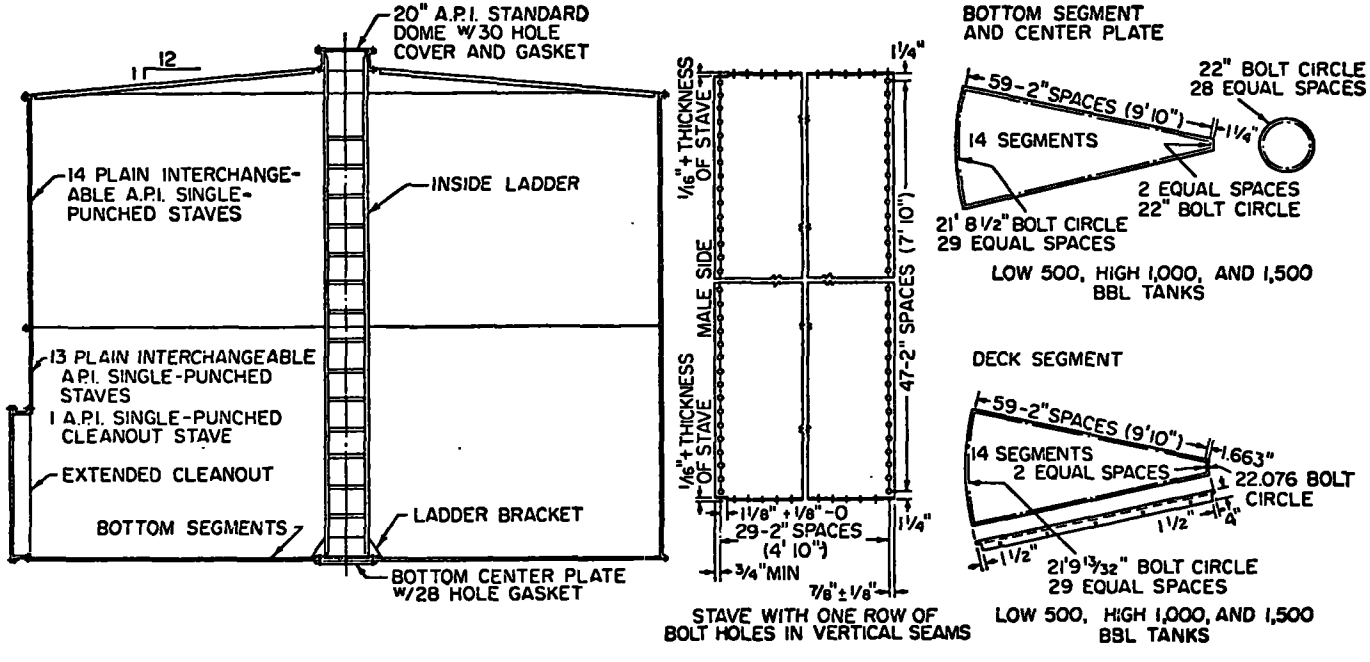

High 1,000-bbl API bolted-steel tank showing stave, deck, and bottom segments.

FIGURE 2.3-5 BOLTED STEEL TANK

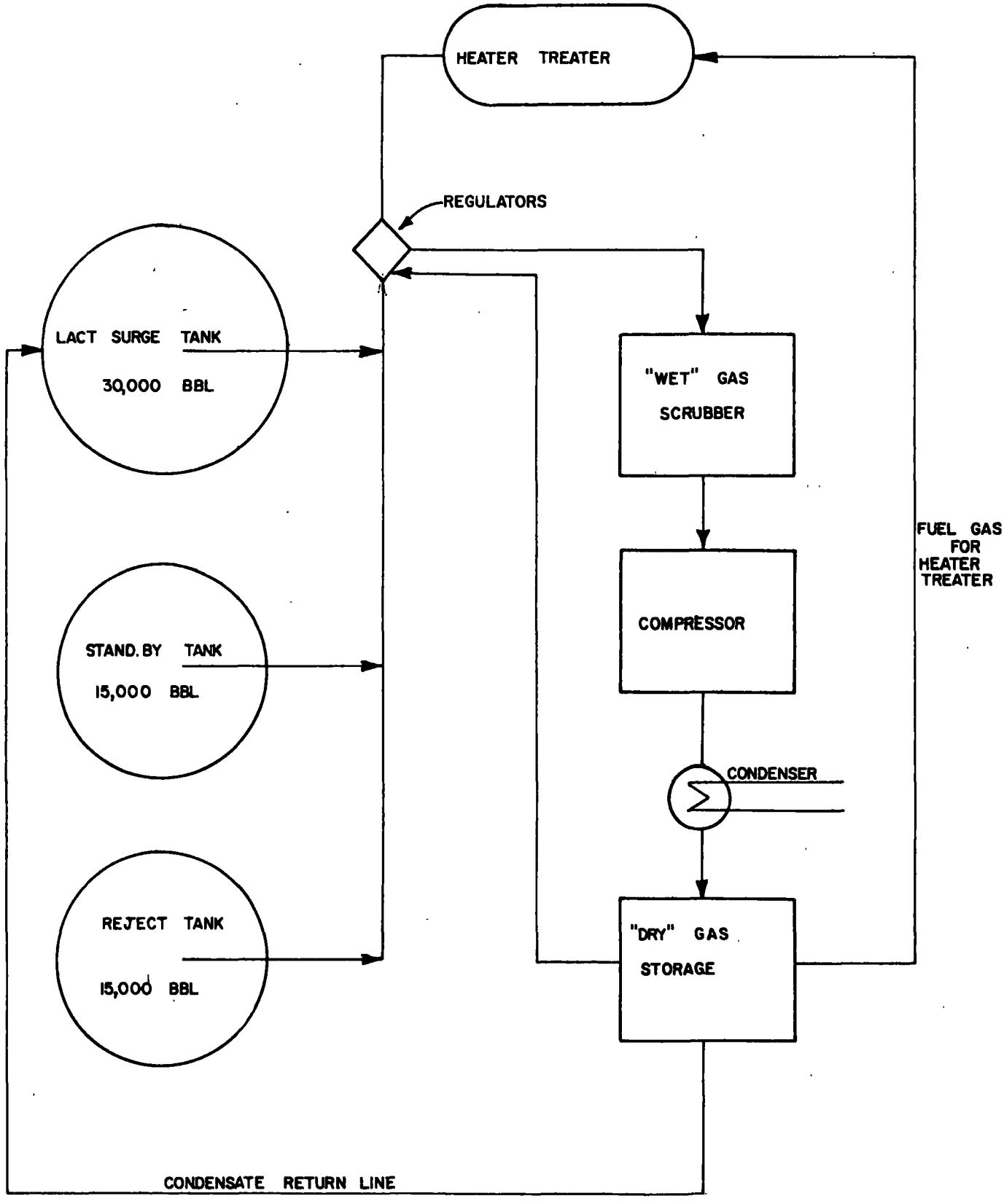

FIGURE 2.3-6 VAPOR RECOVERY SYSTEM

through steam injectors or water flooding. The flotation cell type wastewater treater is a commonly used primary water treating facility. This system utilizes air or gas injection upstream of the main wastewater process pump. The air and the chemical coagulants, if required, are thoroughly mixed inside the pump. The discharge flow from the pump enters the retention tank where air is dissolved under 2-3 atmospheres of pressure. As the wastewater enters the flotation cell, the pressure is released to atmospheric pressure and the air comes out of solution. Small sludge and oil particles become floatable on the bubbles or foam and pass to the top where the rotating skimming arm sweeps the oil sludge into a compartment for removal. The same drive shaft also rotates a bottom grit scraper arm for the separate removal of settled solids to the grit collecting box. A flotation cell wastewater system is shown in Figure 2.3-7 (CH-182). Other possible wastewater treatment methods include sedimentation followed by aeration, aerated lagoons, or evaporation ponds. The type system employed is determined primarily by the ultimate use of the wastewater.

If the treated water is to be further used for either steam generation or water flooding, it must be filtered to remove the suspended solids. A sand filter or a diatomaceous earth filter may be used. The solids concentration must be lowered as much as possible to eliminate particulate buildup in the injection well.

The wastewater often must be treated for removal of dissolved H_2S. This can be accomplished by one of the following methods: (1) aeration, (2) vacuum degassing, (3) countercurrent gas stripping, or (4) chemical treatment (CH-182).

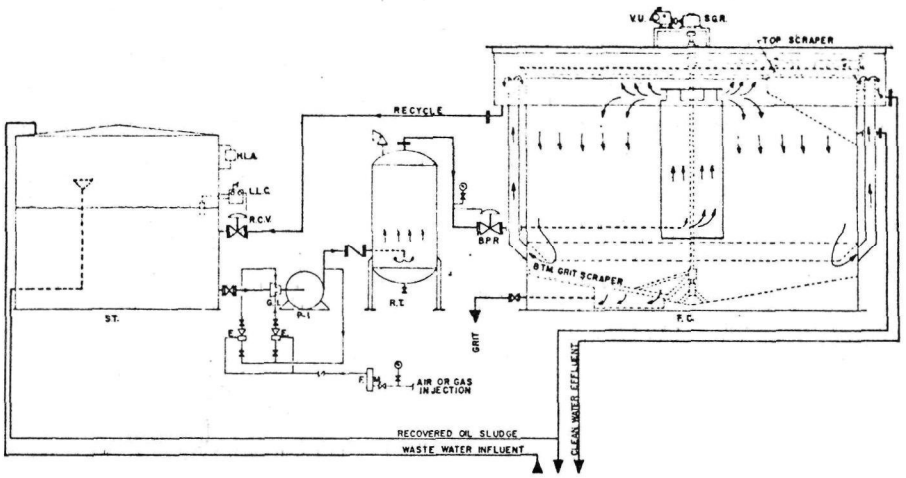

Fully pressurized flotation cell; waste water system (P and I flow diagram). (Courtesy of Pollution Control Engineering, Inc., Los Angeles, California.)

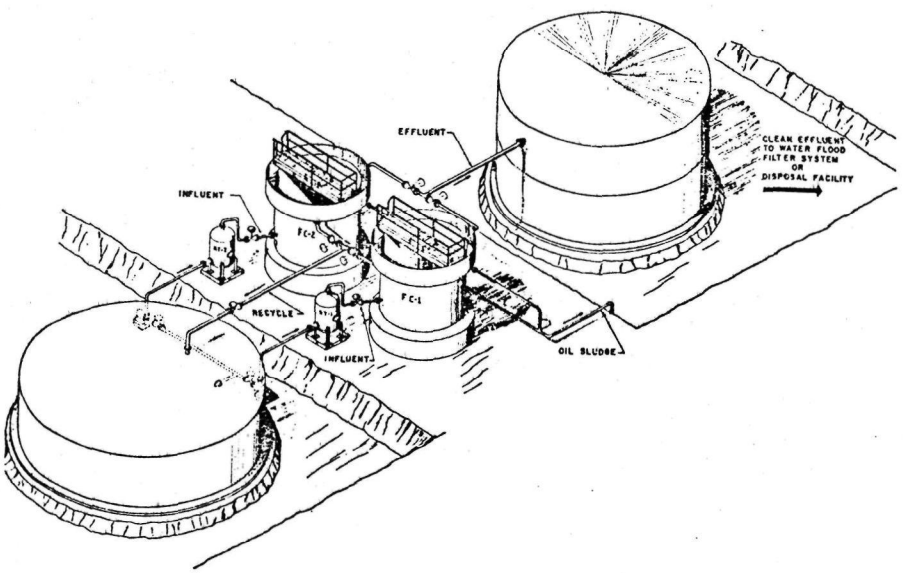

Dual flotation cell; waste water system. (Courtesy of Pollution Control Engineering, Inc., Los Angeles, California.)

FIGURE 2.3-7 WASTE WATER SYSTEM

2.3.6 Secondary, Tertiary Recovery

Water flooding and steam injection are the main techniques for secondary recovery of crude oil. The injection system consists of a central high-pressure water pump for water flooding or a steam generator for steam injection, plus a distribution system. For water flooding systems, each wellhead may have its own high-pressure pump. Selection of the system is dependent on economics and the characteristics of the crude being recovered. Steam injection is generally used to recover heavier crudes.

Although secondary recovery methods tend to increase the crude production, they by no means effect complete crude recovery from the reservoir (HO-172). As the value of hydrocarbons increases, additional or tertiary recovery of the residual is becoming economically feasible. Tertiary recovery processes include injection of material into the reservoir either to decrease the viscosity of the crude, to make the crude oil miscible with water or other hydrocarbons, or to plug pores in swept-out reservoir areas. Injection of these materials will involve some type of high-pressure pump or compressor.

Typical materials injected to decrease the viscosity are hydrocarbons, soluble gases (such as CO_2), and surfactants. To enhance miscibility with water, LPG-enriched gas, high-pressure gas, alcohols, soluble oils, and micellar solutions are injected into the wells. The plugging of pores reduces backflow of crude oil. As pore plugging agents, emulsions or caustics are shown to have the best field success, while foams, precipitators, silica, and gels have been shown to have economic drawbacks (HO-172). Polymers such as polyacrylamides and

polysaccharides have also been used for selective plugging. These polymers also tend to improve the fluid mobility of the recovered crude.

2.3.7 In-Situ Combustion

As with coal and shale oil, crude oil can also be recovered by in-situ combustion techniques, although the technology applicable to oil production is quite new. Three methods of in-situ oil production are generally cited: (1) forward combustion, (2) reverse combustion, and (3) "wet" combustion.

Forward combustion consists of injecting air into a reservoir to establish a flow path for the movement of combustion gases, igniting the crude oil by using a bottom-hole heater or burner, and propagating the combustion front by continuous air injection. As the burning zone advances from the injection well, it pushes oil and water to the surrounding producing wells (CH-182).

The reverse combustion process is operated in a similar manner except that in this case producing wells are ignited rather than the injection wells. The burning front moves countercurrent to air flow toward the injection well and after reaching the injector may reverse direction and burn back to the producing well like a normal combustion process (CH-182).

"Wet" combustion is also much the same as forward in-situ combustion except that water is added along with the injection air. Water injection offers three advantages over conventional dry in-situ combustion: (1) more efficient heat

distribution, (2) reduced fuel requirements, and (3) faster movement of the combustion front through the reservoir. These advantages relate to more efficient use of combustion air (WE-134).

All of the procedures described above may be used for onshore or offshore oil production. Offshore production has the added problem of limited space, therefore, proper design of equipment becomes especially important. Special consideration must be given to design of offshore facilities for the prevention of oil spills. While spills are of concern in both onshore and offshore production, offshore spills are generally more difficult to contain and can create severe environmental problems.

2.4 Gas Production

Natural gas is a degradation product resulting from the decomposition of buried organic matter. It is found in recent sediments deposited in both freshwater and saltwater environments, in ancient sedimentary rocks, in subsurface aquifers, in fine fractures in coal seams, and even in metamorphic rocks. As of 1969, there were 114,500 wells producing gas from such formations (PR-052). Wells are classified as gas wells or oil wells based on the ratio of oil/gas produced. For example, Texas law defines an oil well as ".....any well which produces one (1) barrel or more of crude petroleum oil to each one hundred thousand (100,000) cubic feet of natural gas" (PR-052).

In this section, only those operations involved in producing the natural gas from basically pure gas reservoirs are discussed. Gases extracted from different producing fields have widely varying compositions. Most field gases contain some undesirable compounds such as CO_2, H_2S, H_2O, and combined sulfur compounds which must be removed prior to sales. Typical processing facilities for upgrading the gas to market specifications are described in this section.

2.4.1 Gas Field Operations

Two basic types of fields exist from which gas is produced. One is the "dry" gas field in which no hydrocarbons heavier than methane and ethane are produced and the only processing required is dehydration and acid-gas removal. The other type is the "wet" or "condensate" field where a clear condensate is produced with the gas. Besides acid-gas removal and dehydration, separation of these heavier hydrocarbons is a necessary step in achieving acceptable natural gas specifications.

Although the composition of natural gas at the wellhead varies from field to field, each well produces some or all of the following components:

- paraffinic hydrocarbons, principally methane with some ethane and propane, and lesser amounts of C_4 and heavier hydrocarbons.
- napthenic hydrocarbons
- water
- nitrogen
- oxygen
- helium
- carbon dioxide
- hydrogen sulfide
- other sulfur compounds; e.g., carbonyl sulfide, CS_2 and RSH

The typical distribution of components in a U.S. natural gas well is shown in Table 2.4-1. The initial production step involves withdrawal of the gas from the well at the reservoir pressure. The gas is then passed through a water knock-out drum to remove any water and piped to a gas plant where it is processed to meet sales specifications.

Condensate fields are operated somewhat differently. In these fields retrograde condensation often occurs. This is a phenomenon signified by the condensation of liquids out of the gas as the pressure is reduced. Thus, when the high pressure gas is introduced into a lower pressure system through a choke,

TABLE 2.4-1

TYPICAL DISTRIBUTION OF COMPONENTS IN U.S. NATURAL GAS AT THE WELL

Component	Volume Percent
He	0 - 2
N_2	0 - 16
CH_4	60 - 99
C_2H_6	1 - 20
C_3H_8	0.5 - 6.5
C_4H_{10}+	0 - 4.5
CO_2	0 - 5

SOURCE: TE-172

liquid forms. Liquid also condenses in the formation as the field pressure drops and unfortunately does not completely vaporize at the abandonment pressure of the field. Cycling plants are designed to prevent this loss in product. The natural gas produced is processed on site to recover natural gasoline, and the residue gas is reinjected to maintain reservoir pressure. This separation of the condensates from the gas stream is accomplished by "stage trapping" of the well stream. This stage separation can be defined as a process in which gas and condensate are separated into liquid and vapor phases by two or more equilibrium-flash vaporizations at successively lower pressures (PR-052). A simplified diagram of a three-step separator is shown in Figure 2.4-1.

2.4.2 Gas Processing Plant Operations

Partially dehydrated, raw natural gas is sent to a gas processing plant which is usually located near the field. Here the field gas is processed to meet sales specifications of utility gas distributors and companies. Some typical specifications are as follows (CH-182):

(1) A hydrogen sulfide content of less than 0.25 grains per 100 cubic feet and a total sulfur content of less than 3 grains per 100 cubic feet are usually required.

(2) Water and hydrocarbon dew point temperatures may range from as high as 50°F in the south to as low as 0°F in cold areas.

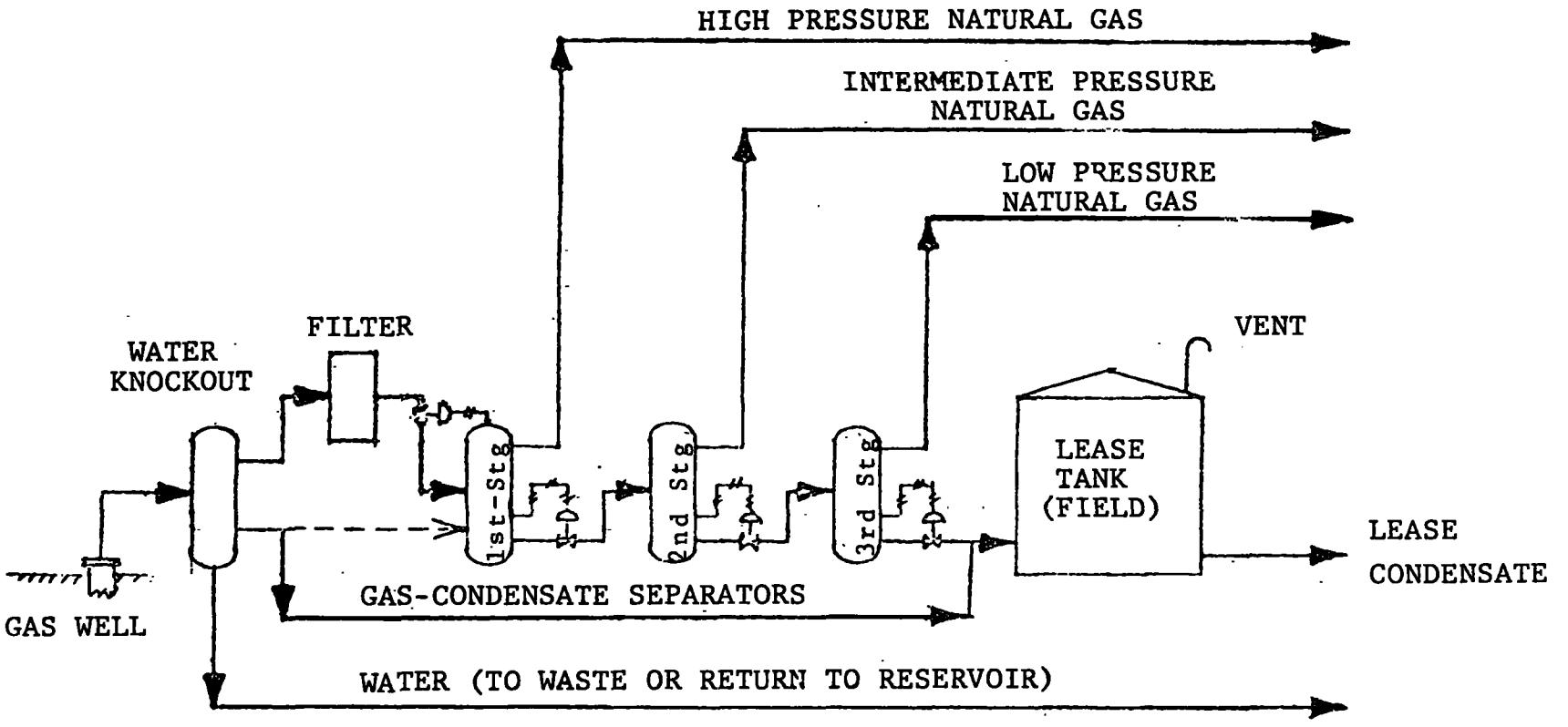

FIGURE 2.4-1 FLOW DIAGRAM FOR THREE-STAGE WELLHEAD SEPARATION UNIT

(3) Air content is usually limited to 1 to 5%.

(4) Carbon dioxide is usually limited to 1 to 5%.

(5) Gross heating value range is specified. A minimum might be 1000 Btu per cubic foot. Often gas is sold on a Btu basis with a penalty or credit for each 50 Btu per cubic foot change in heating value above or below some base value.

The processing plant has three distinct sections: (1) acid gas removal usually followed by a Claus sulfur recovery plant; (2) gas dehydration; and (3) heavy hydrocarbon separation. A typical arrangement of these processes is shown in Figure 2.4-2. The following sections describe more fully these gas plant operations.

Acid Gas Removal

There are over twenty methods available for the removal of acid gas constituents, carbon dioxide and hydrogen sulfide. Methods developed range from the simple water-wash techniques to the molecular sieve removal methods. The majority of acid gas removal procedures used in gas plants are characterized by the processes listed in Table 2.4-2.

A frequently used method for separation of acid gas is by absorption with an amine solution. The basic flow is shown

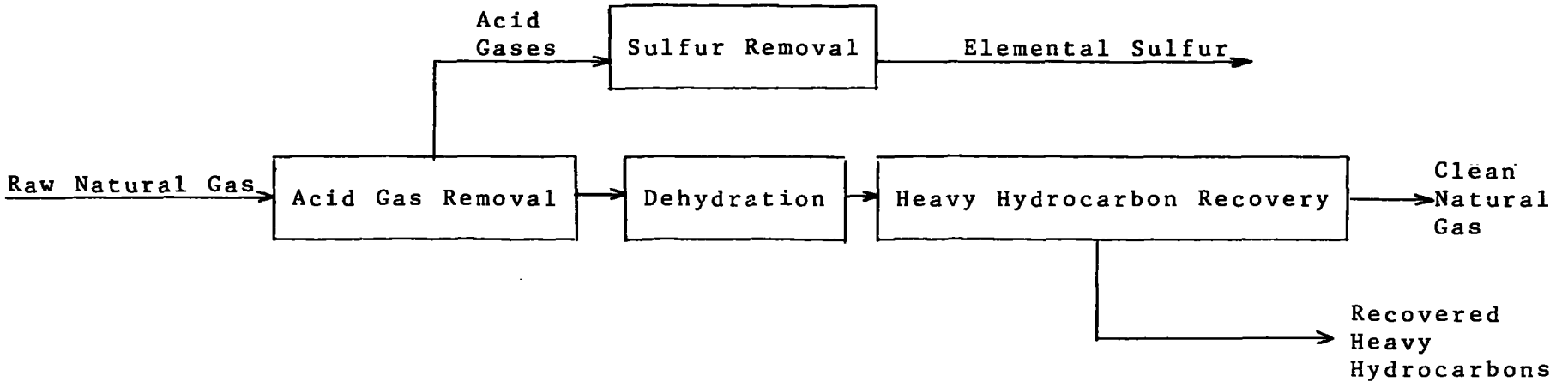

FIGURE 2.4-2 NATURAL GAS PROCESSING PLANT

TABLE 2.4-2

TYPICAL ACID GAS TREATING PROCESSES

Process	Special Features
Benfield	Used for gases containing high CO_2 and H_2S concentrations
Diglycolamine or Economine	Used to remove COS and RSH, as well as CO_2 and H_2S
Fluor Solvent	Used for gases with high concentrations of CO_2 and H_2S
Girbitol or MEA	Most commonly used process in gas industry today
Molecular Sieves	Used on low acid gas concentrations (<100 grains H_2S/100 ft^3) and for H_2O and RSH removals
Selexol	Used on high CO_2 with low H_2S, especially when H_2S goes to Claus plant
Sulfinol	Used on wide range of H_2S and CO_2 concentrations

in Figure 2.4-3. Other common treating absorbents are aqueous solutions of the ethanol amines or alkali carbonates. In these processes the sour natural gas is passed countercurrent to a stream of the solution in a packed or tray tower. The H_2S and CO_2 are absorbed by the solution, sweetening the gas. After leaving the absorber, the rich solution enters a regenerator where the acid gases are stripped from the solution usually by heating, but also by pressure reduction in flash vessels, or by an inert gas stripping. The regenerated solution is then pumped back to the absorber where a new cycle begins.

Molecular sieves are dry bed absorbers. This technology has been receiving increasing attention in the gas industry. Advantages of molecular sieves include simplified operation, reliability, and a wide range of cleanup capabilities. The molecular sieve can be used for removal of all polar contaminates present in the gas, including water vapor, sulfur- and oxygen-bearing compounds.

Sulfur Conversion

The original technique for conversion of H_2S to sulfur was the Claus-Chance process. It has been modified considerably in recent years. The Mathieson Chemical Company has developed a considerably improved version which has been used successfully in numerous modern installations. A schematic flow diagram of this process is shown in Figure 2.4-4.

In the reaction furnace, H_2S is combusted with a sub-stoichiometric air supply. Some sulfur is formed here and removed, while the rest of the gases pass to a series of two or

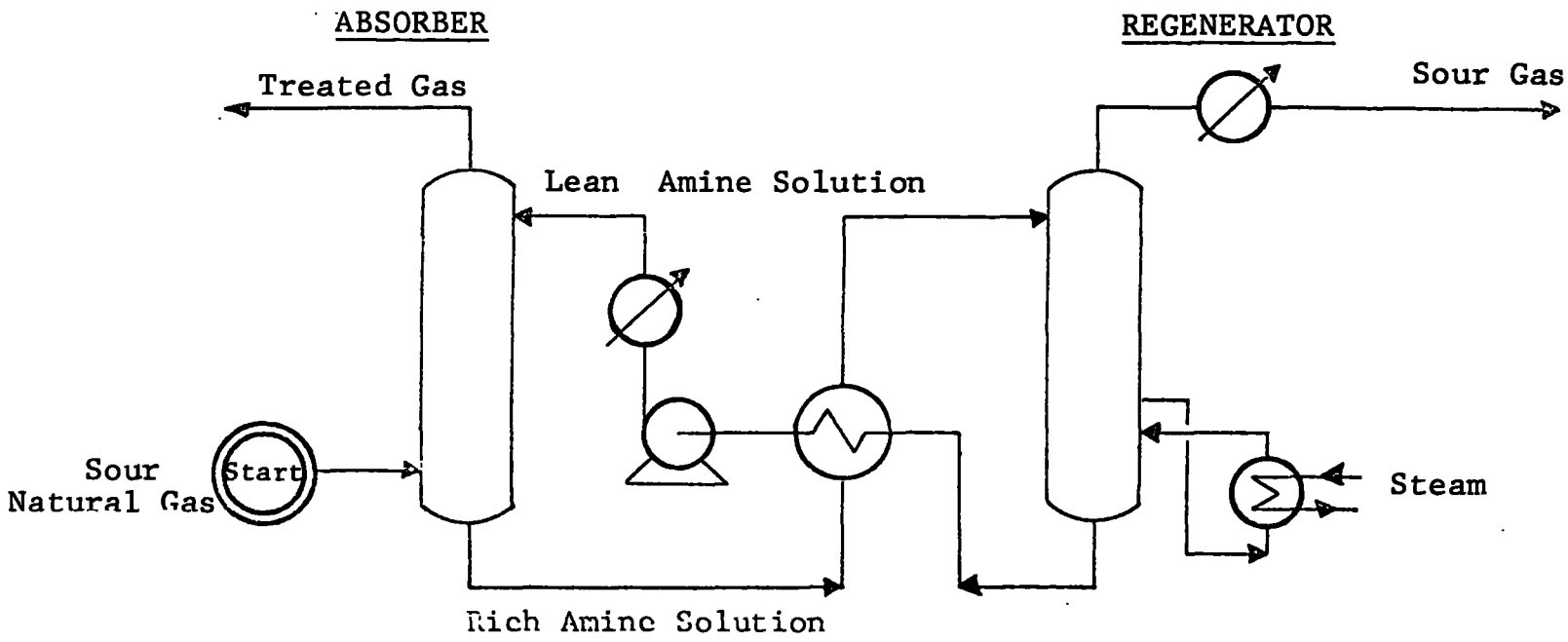

FIGURE 2.4-3 TYPICAL AMINE TREATING UNIT

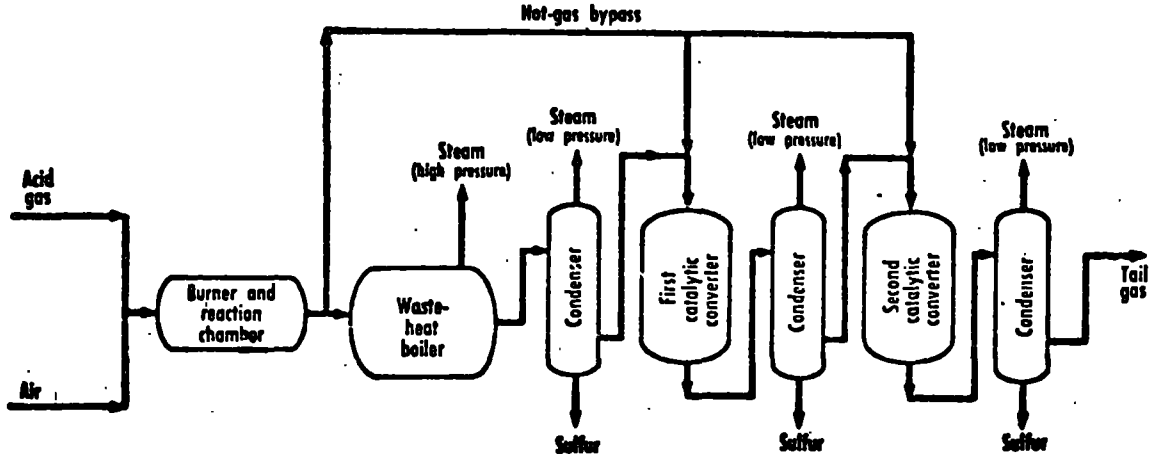

FIGURE 2.4-4 CLAUS SULFUR RECOVERY UNIT

three catalytic converters. In these converters unreacted H_2S combines with the SO_2 formed in the reaction furnace, producing elemental sulfur which is then removed by condensation from the process. Efficiencies for the unit range from 90 to 98 weight percent sulfur recovery. Efficiencies attainable are dependent on the H_2S concentration in the feed, the quality of the catalyst used, and the number of catalytic stages.

Dehydration

The most common impurity in natural gas is water. Its removal is accomplished by dehydration with a dry desiccant or glycol solution. Desiccants commonly used are activated alumina, silica gel, and molecular sieves. Figure 2.4-5 shows a typical two-bed solid adsorbent treater used for dehydration. While one desiccant bed is removing water from process gas, the other is being regenerated by heat and then cooled. Frequently a three-bed system is installed. One unit is adsorbing, one is being heated or regenerated, and the third is being cooled.

Another gas dehydrating method involves contacting the wet gas with hygroscopic substances such as diethylene glycol (DEG) and triethylene glycol (TEG). These chemicals are efficient drying media, chemically stable and readily available at a moderate cost.

A typical glycol dehydration plant is pictured in Figure 2.4-6. Water vapor is continuously absorbed from the wet gas stream by countercurrent contact with a glycol solution. The dried gas passes out the top of this column. Wet glycol passes to a regenerator section where the glycol is dehydrated and sent back to the absorber.

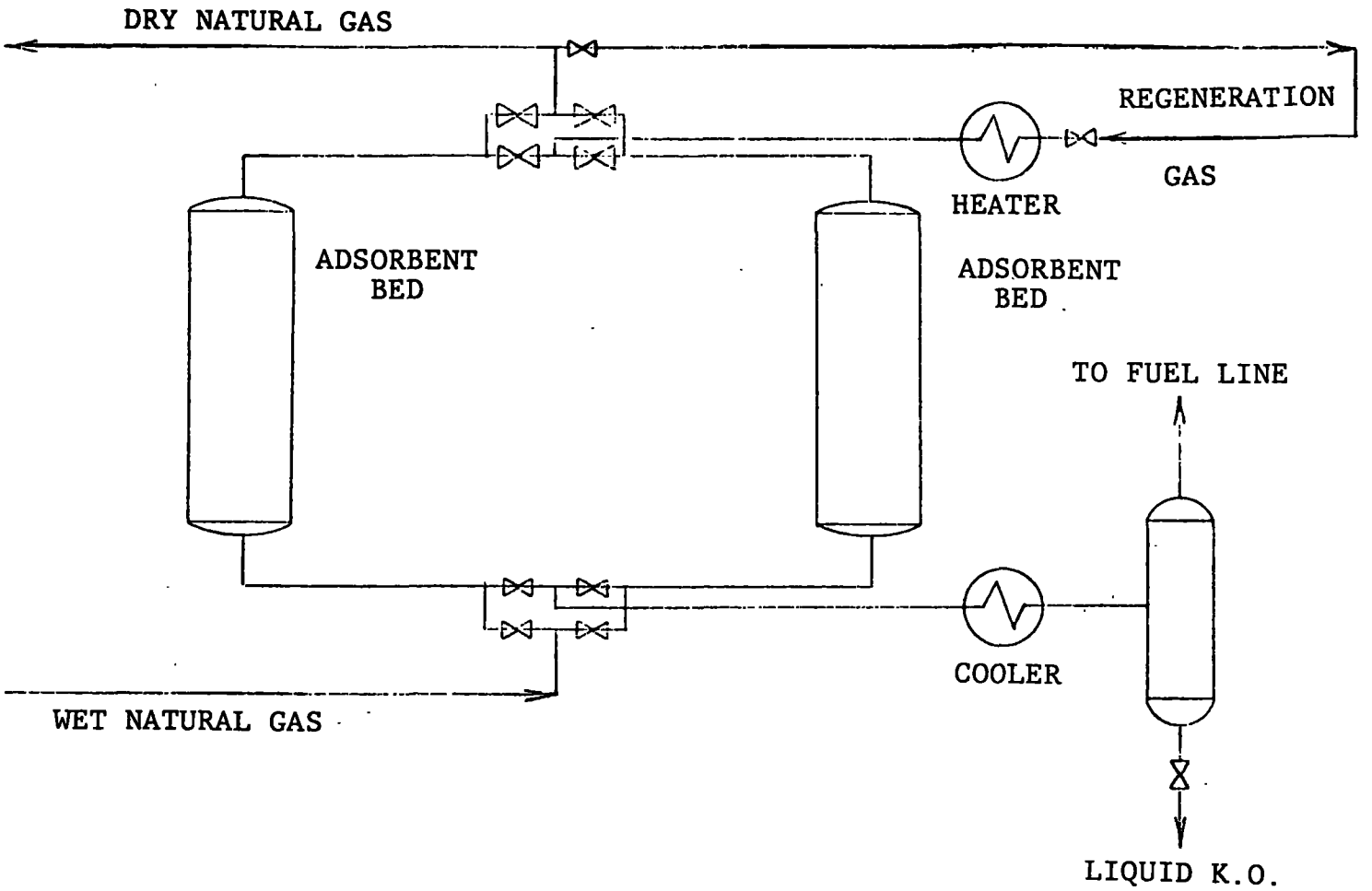

FIGURE 2.4-5 TWO BED SOLID ADSORBENT TREATER

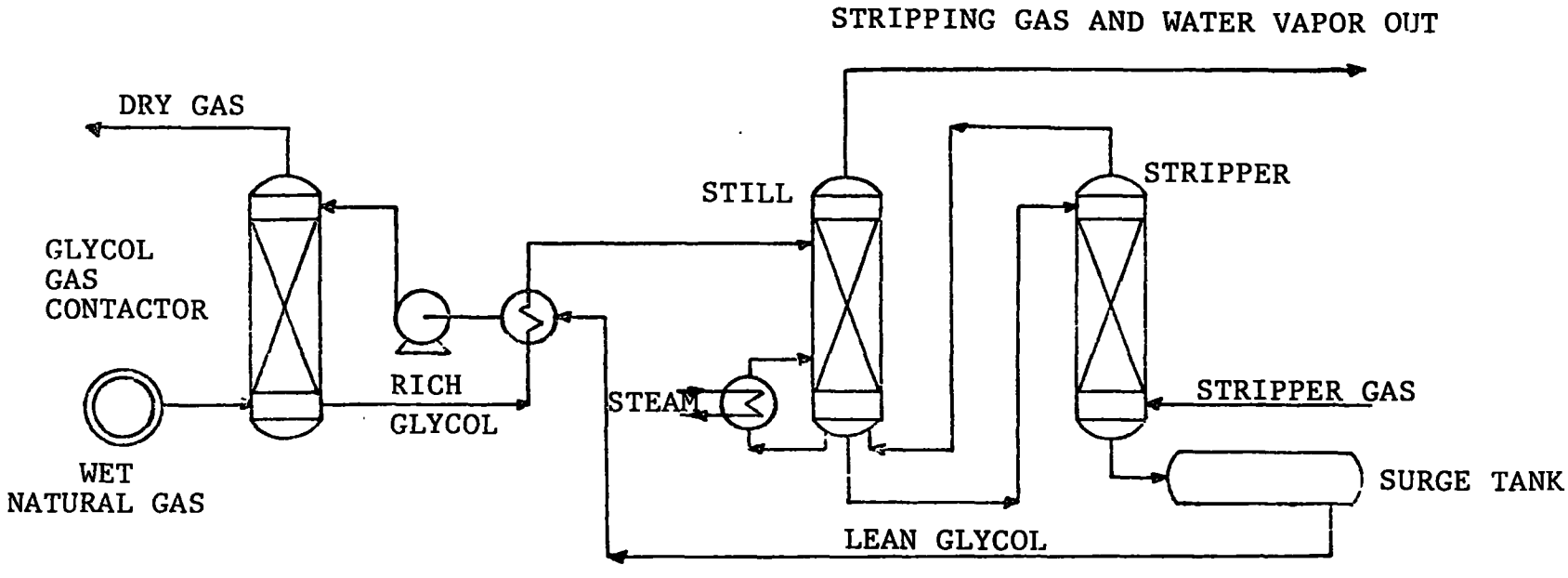

FIGURE 2.4-6 TYPICAL GLYCOL DEHYDRATION UNIT

Heavy Hydrocarbon Stripping

Several processes are currently used in the United States to achieve gas separation. These processes involve various combinations of absorption, refrigeration, compression, adsorption, fractionation, cryogenic separation, and turbo-expansion. With the exception of the fractionation process, heavy hydrocarbon stripping processes are usually identified by the method used to separate ethane and heavier hydrocarbons from the raw natural gas feed. Brief descriptions of commonly used separation processes are given in the following section. Included are absorption, refrigerated absorption, refrigeration, compression, and adsorption (PR-052).

In an absorption process the wet field gas is contacted with an absorber oil in a packed or bubble tray column. Propane and heavier hydrocarbons are absorbed by the oil while most of the ethane and methane pass through the absorber. The enriched absorber oil is then taken to a stripper where the absorbed propane and heavier compounds are stripped from the oil.

The natural gas feed to a refrigerated absorption process must be dehydrated to a minus 40°F dew point prior to entering the unit. All hydrocarbons except methane are absorbed by absorber oil operating at minus 40°F. These absorbed hydrocarbons and the oil are passed through a series of fractionation columns from which ethane, propane, and heavier hydrocarbons are removed as product streams.

In refrigeration, a cryogenic process, the natural gas must be dried to a dew point of minus 150°F or lower, using

molecular sieve beds. The dry gas is then passed through a heat exchanger where it is cooled to minus 35°F. Condensed hydrocarbons are removed in a gas-liquid separator. The gas from the separator is cooled to minus 135°F and passed through a second separator where more condensed liquids drop out. The liquids from two separators are fed to a series of distillation columns where methane, ethane, propane, butanes, natural gasoline, and other products are recovered.

A compression process uses two stages of compression, each followed by cooling and gas-liquid separation, to produce a wet natural gas product and natural gasoline. This is not a widely used process. Less than 3% of the gas processing plants in the United States are using compression only for gas separation.

The adsorption processes consist of two or more beds of activated carbon. The beds are used alternatively, with one or more beds on stream while the others are being regenerated. The activated carbon adsorbs all hydrocarbons except methane. The bed is regenerated by means of heat and steam, which remove the adsorbed hydrocarbons as a vapor. This vapor is then condensed permitting the water to be separated from the liquid hydrocarbons. The resulting hydrocarbon product is fed to a fractionation process where the various components are separated. About 12 percent of the existing natural gas plants in the United States use an adsorption process.

2.5 Transportation

This section contains a review of the current technologies used in the transportation of coal, oil, and gas. Specifically, the modes of transportation discussed are coal transportation by railway, barge, and slurry pipeline; oil transportation by railway, barge, and pipeline; gas transportation by pipeline.

2.5.1 Coal Transportation

In the United States today, coal is transported by either railway, barge, or slurry pipeline. By far the most prominent method of coal transportation is railroads. Barge transportation is geographically limited, and coal slurry pipelines are a relatively new transportation mode. The coal transportation pattern as of 1973 was approximately as shown below:

1973 ESTIMATED LONG DISTANCE COAL MOVEMENTS

Transport Mode	Millions of Tons/Year
Railroad	400
Inland Waterway	150
Slurry Pipeline	5

Rail Transportation of Coal

Coal is a bulk commodity and the cost of transportation from mine to market accounts for a significant portion of the price paid by the consumer. The first rail transportation of coal was in single-car shipments in mixed trains. As individual

producers increased their output, multiple-car shipments in mixed trains were initiated. As production increased to modern levels, the trend was toward all-coal haulage for greater efficiency and economy. Both efficiency and economy have reached their present maximum in the unit train concept (GL-038).

Four principal types of gathering and distribution systems have evolved (see Figure 2.5-1). In Movement A, several small producers use a marshalling yard at the producers' end to assemble an all-coal train for movement to a distribution point for forwarding to several small consumers. In Movement B, one producer uses an all-coal train for movement to a distribution point for forwarding to several small consumers. In Movement C, several small producers use a marshalling yard at the producers' end to assemble an all-coal train for movement to a single consumer. In Movement D, one producer utilizes an all-coal train for a movement to one consumer.

Physically, a unit train consists of a dedicated set of haulage equipment loaded at one origin, unloaded at one destination each trip, and moving in both directions on a predetermined schedule. Although Movement D contains the basic elements of the unit train concept, it is not strictly in that classification. Movement types A, B, C, and D traditionally have been planned and managed by the railroad in response to instructions from the shipper. Planning is short range and often inefficient; carriers are frequently not informed by either the producer or the consumer of their long-term plans. This long-term planning and management capability is the element needed to make the transition from the earlier modes of coal shipment to the unit train. As the tonnage of coal transport

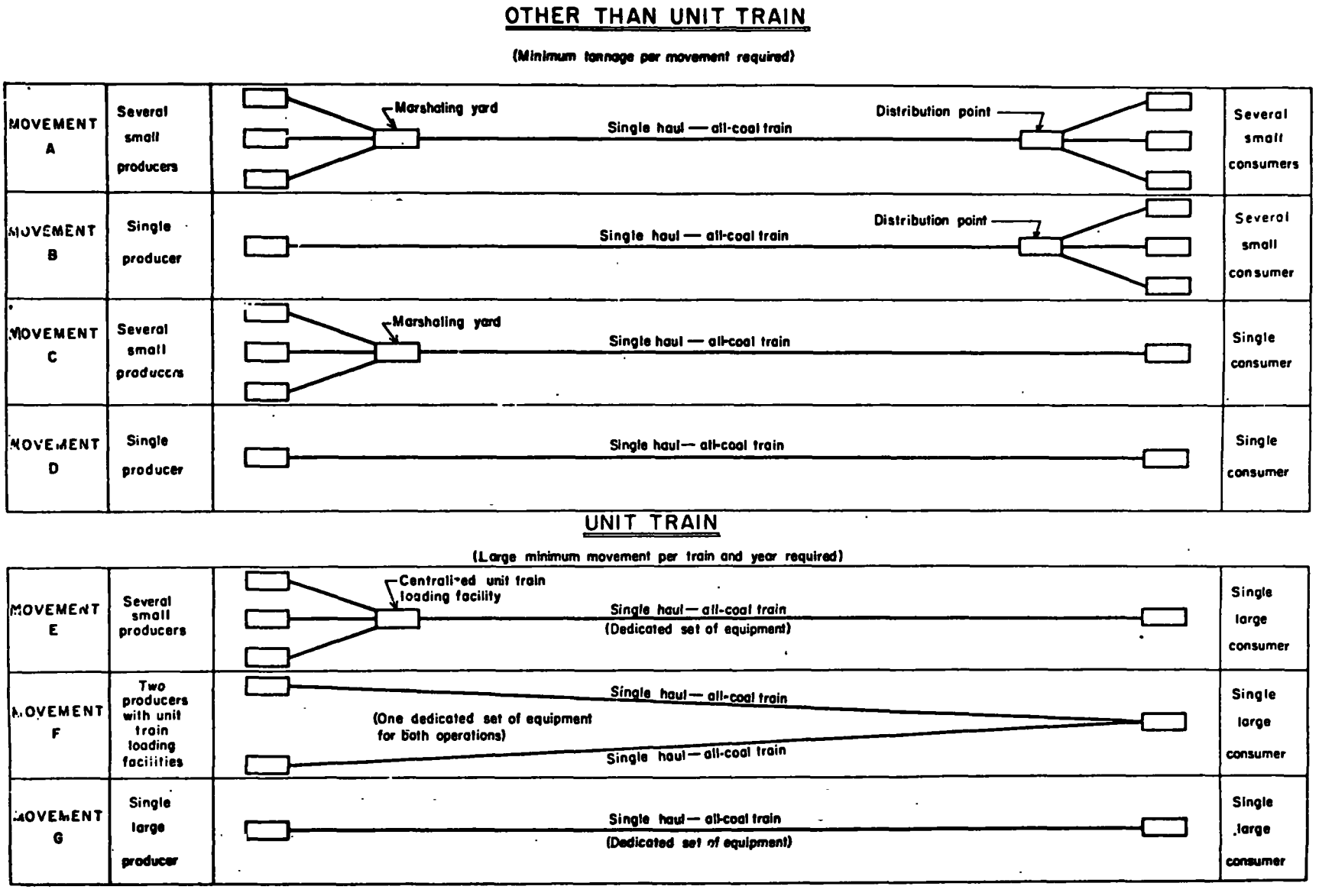

FIGURE 2.5-1 BULK COAL MOVEMENTS

increases, it is expected that unit train haulage will become more widely used.

Railroads consider three kinds of volume shipments as unit train movements. In Movement E, (Figure 2.5-1) several small producers, with centralized unit train loading facilities and dedicated transportation equipment, ship to one large consumer. In Movement F, two coal producers, each with rapid loading and storage facilities and with dedicated transportation equipment, move the product to one large consumer. Finally, in Movement G, dedicated equipment delivers coal from a single producer to a single consumer. In the limit, the same company may be the producer and consumer, and also the owner of the unit train equipment, which leases only rail service from the railroad company.

The major source of air emissions from coal-hauling trains results from the diesel-fired train locomotives. These locomotives require 750 Btu per ton-mile (AM-115). Another contribution to emissions is the fugitive dust arising from the loading, transfer, and unloading of the coal.

Barge Transportation of Coal

Most coal moving on United States inland waterways is carried in unmanned barges having drafts of six to fourteen feet. Barges, usually in groups or strings, may be moved by either a towboat (pushing) or a tug (pulling), both of which are usually powered by diesel engines. The diesel towboat which replaced the stern wheeler on the rivers, canals, and harbors is responsible for increasing the importance of the barge and towing vessel industry over the last 25 years (AM-115).

Low energy requirement is a basic advantage of water transportation. The movement of coal by barge requires 500 Btu of energy for every ton-mile of cargo moved (AM-115). Exhaust from tugboat engines is the major source of air emissions. Fugitive dust lost during loading, transfer, unloading of the coal, and in transit, is another source of emissions.

The operations involved in the shipping of coal by the inland waterways on barges are relatively simple. Coal is first loaded onto the barges from a canal or river terminal. Loading usually is accomplished with a tipple which allows for a continuous, easily measured method of moving large amounts of coal. From the loading terminal, the barges are moved by towboat to the consumer. Coal is transferred from barge to storage pile at the consumer's water terminal using draglines.

Coal Slurry Pipeline

The hydraulic transport of solids by pipeline is a well-developed technology (AD-021, AU-006, BA-233, DU-061, GO-055, PI-044, SK-024, ST-188). Their characteristics are well understood and have been demonstrated by laboratory and pilot tests and by mathematical models.

Basically, coal in slurry form is transported from mine to power plant via pipeline system in the following manner: coal in roughly 2 inches in diameter chunks is delivered to a preparation plant where it is reduced to approximately ¼ inch diameter sizing. This is done by crushing and pulverizing the coal by wet grinding and rod mills (LO-084, MO-103, MO-126).

In the rod mills, water is introduced to the pulverized coal to form the slurry. Coal concentration in the slurry is in the range of 45-55 wt. % (WA-043, WA-140). Specific gravity of the slurry is about 1.40. The slurry is pumped into mechanically agitated storage tanks where it is stirred to maintain an average concentration of 50% solids by weight. The slurry is then fed into the pipeline from the storage tanks by a centrifugal charge pump, followed by a high-pressure positive displacement pump. An average flow velocity of 5.0 ft/sec is maintained throughout the pipeline by pumps that are spaced along the line at 60 to 100 mile intervals (WA-125, WA-126, AU-019, CO-197, HU-088, WA-153). The pipeline terminates at the power plant where the slurry is discharged to slurry tanks.

2.5.2 Crude Oil Transportation

A transportation network consisting of pipelines, tankers, barges, rail tank cars, and tank trucks carry crude petroleum to refineries for processing. Of the crude oil received at the refineries in 1970, 77.4 percent was received by pipeline, 21.5 percent by tankers, and the remaining 1.1 percent by tank cars and tank trucks (BA-234).

Crude Oil Transportation by Rail

As with rail transportation of coal, diesel electric locomotives are used in the shipping of crude oil by rail. However, less than one percent of the oil moved in the United States is shipped on the railways. The railways' share of oil transportation is small because of the extensive network of oil pipelines in the United States and its greater efficiency in moving oil.

When oil is transported by rail, it is first loaded into a tank car at a terminal. These tank cars range from a capacity of 2,000 gallons to 34,500 gallons, which is the current maximum allowed by the Department of Transportation. Loading is accomplished either through the top or the bottom of the tank car. Once loaded, the tank car is coupled with either a mixed freight train or an all-oil train for shipment. Unloading of the oil is accomplished through the bottom of the tank car upon arrival at its destination. This type transportation of crude oil characteristically does not follow any predetermined schedules as with unit train operations in shipping coal.

Atmospheric discharge of pollutants occurs from (1) diesel combustion in the locomotives and (2) hydrocarbon losses in transit and during loading and unloading of the oil.

Crude Oil Transportation by Tanker

With the increased industrial growth throughout the world, the demand for energy resources has risen accordingly. Over the last 25 year period, the growth rate for petroleum tanker cargoes outstripped the expansion of world trade as a whole. This rapid expansion is a result of the distribution and geographical location of the major supply and demand centers for crude oil. The world's oil reserves are primarily located in lesser developed countries. The primary demand for this widely used fuel, however, is concentrated in the highly developed industrial nations, most notably Western Europe, Japan, and the United States. As a result, the oil must be moved distances averaging some 6,000 to 12,000 miles.

To meet this need, the world tanker fleet has expanded accordingly. By 1971, tanker tonnage at 162.9 million deadweight tons (DWT) comprised about 48 percent of the world fleet. Of equal interest is the fact that the average size of tankers in operation has tripled over the same 25 year period. Tankers in the 300,000 DWT class are in general use today, with 500,000 DWT tankers just beginning operations (US-124).

These large tankers are powered with steam turbines. Fuel oil is the primary fuel used in the boilers (EN-071). Atmospheric emissions associated with the transportation of crude oil by tanker would result from the flue gases from these boilers. Also, some fugitive hydrocarbon losses result from the loading, transit, and unloading of the crude.

Crude Oil Transportation by Pipeline

Approximately 77.4 percent of the crude oil transported is moved by pipeline. In the petroleum industry, three basic types of pipeline systems are used: the gathering pipeline system, the trunkline system, and the distribution system. The gathering pipeline system transports crude oil from individual oil wells and other production units to a central location. The trunkline system transports crude oil from the central location to a processing facility or a refinery. The distribution system transports the refinery products to the various consumers. Of these pipeline systems, the trunkline system is of interest in this study, and is referred to as the crude oil pipeline system.

The technology of crude oil transportation by pipeline is well developed and has been applied for decades. Although

there have been a number of innovations in crude oil transportation, its technology continues to advance in the areas of materials, techniques of pipe manufacture, and improved design and methods of construction for both pipelines and stations (PE-097, PE-098).

A crude pipeline system consists of pipes and pump stations. Pipe sizes range from a nominal diameter of 6 inches, with a flow of 7700 barrels per day, to 48 inches with as much as a million barrels per day (PE-098). Pump stations are either electric or diesel powered. In the early 1960's, they were spaced approximately every 80 to 90 miles (BA-224), whereas the newer ones are spaced about every 100 to 150 miles (BA-234).

Air emissions from crude oil pipelines result from these pump stations. Electric-powered stations of course have no emissions, but the diesel-powered stations do emit some pollutants from the internal combustion engines which drive the pumps. Also, small hydrocarbon emissions result from leaks located at flanges, pump seals, valve stems, etc., located in these stations.

2.5.3 Gas Pipeline Transportation

Gas transmission by pipeline is a well-proven technology that is continuously being upgraded by the development of new methods to cope with a changing environment. This change is brought about by the increasing demand for natural gas and the topographic and climatic conditions of the potential sources, such as the Arctic regions or the arid, temperate and mountainous western regions of the United States.

The transport of natural gas to major markets is primarily accomplished by pipelines. Current pipelines are 24, 30, 36, and 42-inch diameter systems (ST-204, VA-093). The compressor stations located along the pipeline are driven either by gas engines, gas turbines, or electric motors. The frequency of compressor stations is one every 50 to 75 miles. A typical gas pipeline system might consist of a 36-inch diameter pipe with compressor stations every 60 miles. The energy required at these booster stations is dependent upon the pipeline pressure being used in transmission. It is estimated that 4.2 percent of the energy throughput in a pipeline is needed for compression power (BA-234).

The atmospheric emissions associated with gas pipelines come from these compressor stations. The exhaust gases from the natural gas burned in supplying the power for the compressor and the fugitive hydrocarbon losses from pump seals, valve stems, etc. are the two sources of these air emissions.

New technology is expected to produce solutions to some engineering problems -- such as the development of larger diameter piping systems, i.e., 48 to 60-inch diameter pipe, and higher operating pressures on the order of 1500 psi to 2000 psi (HA-246, KA-134, VA-093).

3.0 IDENTIFICATION OF EMISSIONS

Based on the general processing information presented in Section 2.0, representative process modules are derived in this section. The following modules are discussed:

Production

- strip mining of coal
- room and pillar coal mining
- in-situ coal gasification
- surface oil shale mining
- room and pillar oil shale mining
- in-situ shale oil production
- oil well production
- gas well production

Transportation

- coal by rail
- coal by barge
- coal by pipeline
- oil by rail
- oil by tanker
- oil by pipeline
- gas by pipeline

Three modules are presented for coal extraction due to the various production alternatives available. Oil shale extraction uses the same mining techniques as used in coal extractions; however, it has a greater solids handling requirement. Therefore, oil shale mining modules are presented in a manner that illustrates the similarities in and differences between the two technologies.

Module capacities or flow rates are based on typical commercial scale operations. After each module is defined in terms of operating conditions, capacities, and energy or fuel demand, the emission sources and emissions are presented. Only air emissions are addressed in this study and only criteria pollutants (i.e., particulates, SO_2, CO, NO_x, and HC) are quantified.

All emissions are related to the module basis allowing for convenient assessment of a typical plant or operational impact. Emissions from all modules are also adjusted to a common Btu output basis for comparison of emission impacts among the various technologies.

3.1 Coal Production Modules

Coal mining operation and equipment choices are extremely varied and in general are determined by the local geology and other natural conditions. As a result, no single mining procedure can be presented as representative of the entire industry. In order to accurately represent the different technologies of the coal mining industry, modules are presented in the following sections for strip mining, room and pillar mining, and in-situ gasification of coal. Although modules for auger mining and longwall (or conventional) underground mining are not presented, it is postulated that the air emissions resulting from these mining modules will be approximately equivalent to strip mining and room and pillar mining, respectively.

3.1.1 Strip Mine Module

Module Basis

The strip mine module is examined both for mining followed by physical cleaning of coal and for mining without physical coal cleaning. The strip mine module basis is 5,000 tons per day of cleaned coal. A 20 percent waste removal in the physical coal cleaning operation and a thermal dryer fuel demand of 1.3 percent of the thermally dried coal is assumed. Run-of-mine coal is used for the strip mine module without coal cleaning. The equivalent coal production rates allows convenient comparison of module emissions. In 1972, 31.6 percent of all the coal extracted by strip mining was mechanically cleaned (US-144). A summary of emissions from both of the strip mining modules (with and without physical cleaning) is shown in Table 3.1-1.

TABLE 3.1-1

SUMMARY OF ATMOSPHERIC EMISSIONS

Strip Mining Coal Module
Basis: 6,300 ton/day R.O.M. coal

Air Emissions (lb/day)*	Without Physical Coal Cleaning	With Physical Coal Cleaning
Particulates	1,800	2,400
SO_2	41	1,330
NO_x	566	1,190
CO	344	394
Hydrocarbons	66	86

*The differences are based on air emissions from the thermal dryer and diesel powered equipment associated with the physical cleaning operation.

Module Description

The strip mine module is considered to be in steady state operation. This means that the mine pit has already been opened and the mine is in production. In this module, any overburden excavated on a continuous basis is moved to the rear of the mine and refilled as a reclaiming operation. The overburden is removed from the mine by an electric dragline. The dragline operation is shown in Figure 3.1-1. The exposed coal is removed from the mine and loaded on 100 ton diesel trucks by two electric loading shovels, each with a capacity of 10 cubic yards. The trucks have a net weight to gross weight ratio of 0.57. They haul the coal to a preparation plant where the coal is crushed prior to transportation or mechanical cleaning.

After the crushing operation, the coal is conveyed to a tipple where it is loaded on unit trains or barges. If mechanical cleaning is included, the coal is run through secondary crushing prior to screening operations. After screening, the coal is physically washed to remove the ash and part of the sulfur. It is assumed 50 percent of the mechanically cleaned coal is thermally dried and 50 percent is mechanically dried. The amount of coal thermally dried depends on the demand for low-moisture coal. The cleaned coal is stored in bins prior to transportation to end use or conversion facilities.

Additional equipment within the mine includes two 300 hp bulldozers assigned for cleanup around the loading shovel and two 385 hp bulldozers for leveling land in the reclamation operation. The overburden stripping operations continue three shifts each day, seven days per week while coal loading is required only one shift per day on a seven-day week basis. The coal strip mine module is shown in Figure 3.1-2 and the coal cleaning plant shown in Figure 3.1-3.

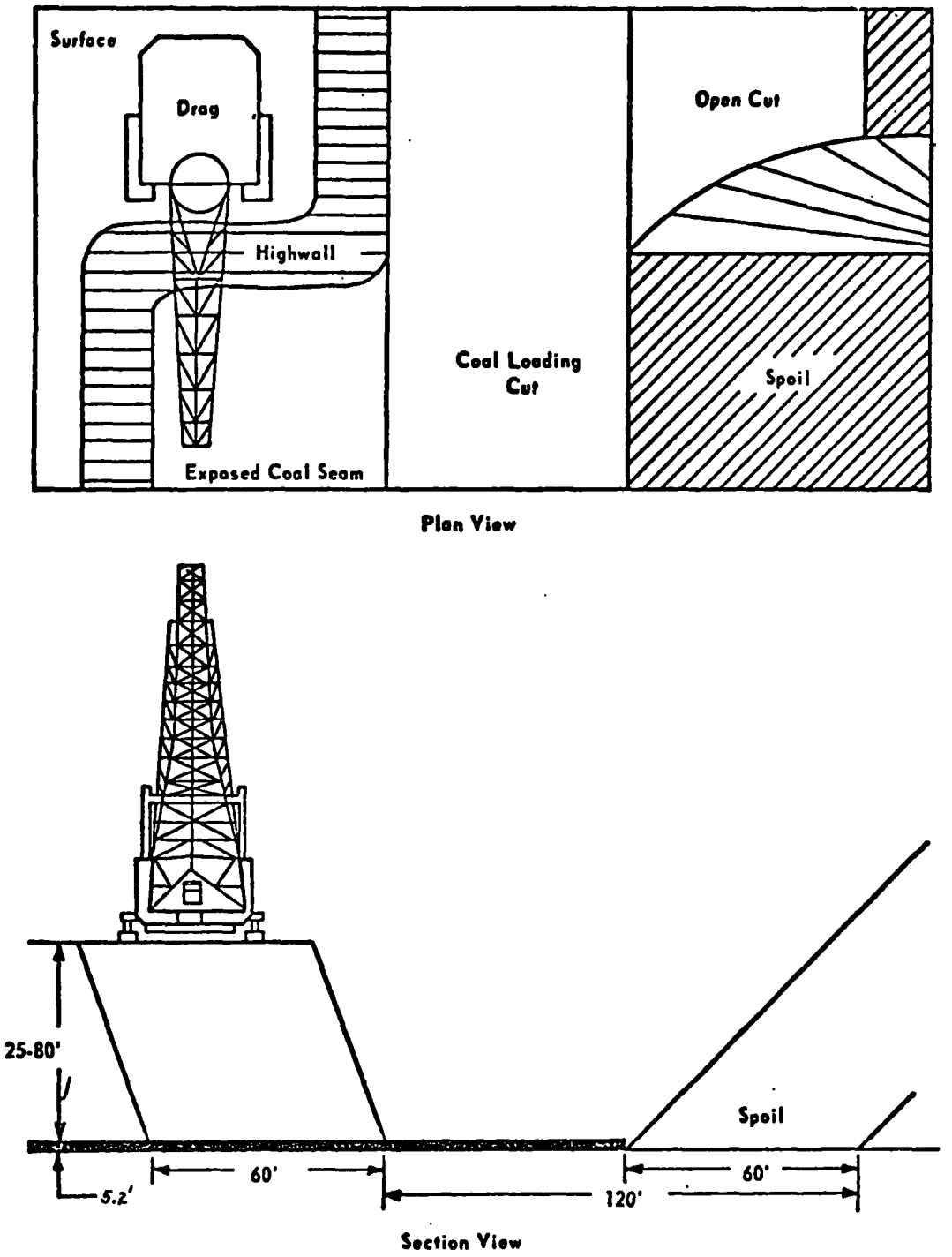

FIGURE 3.1-1 TYPICAL DRAGLINE OPERATION
SOURCE: ST-166

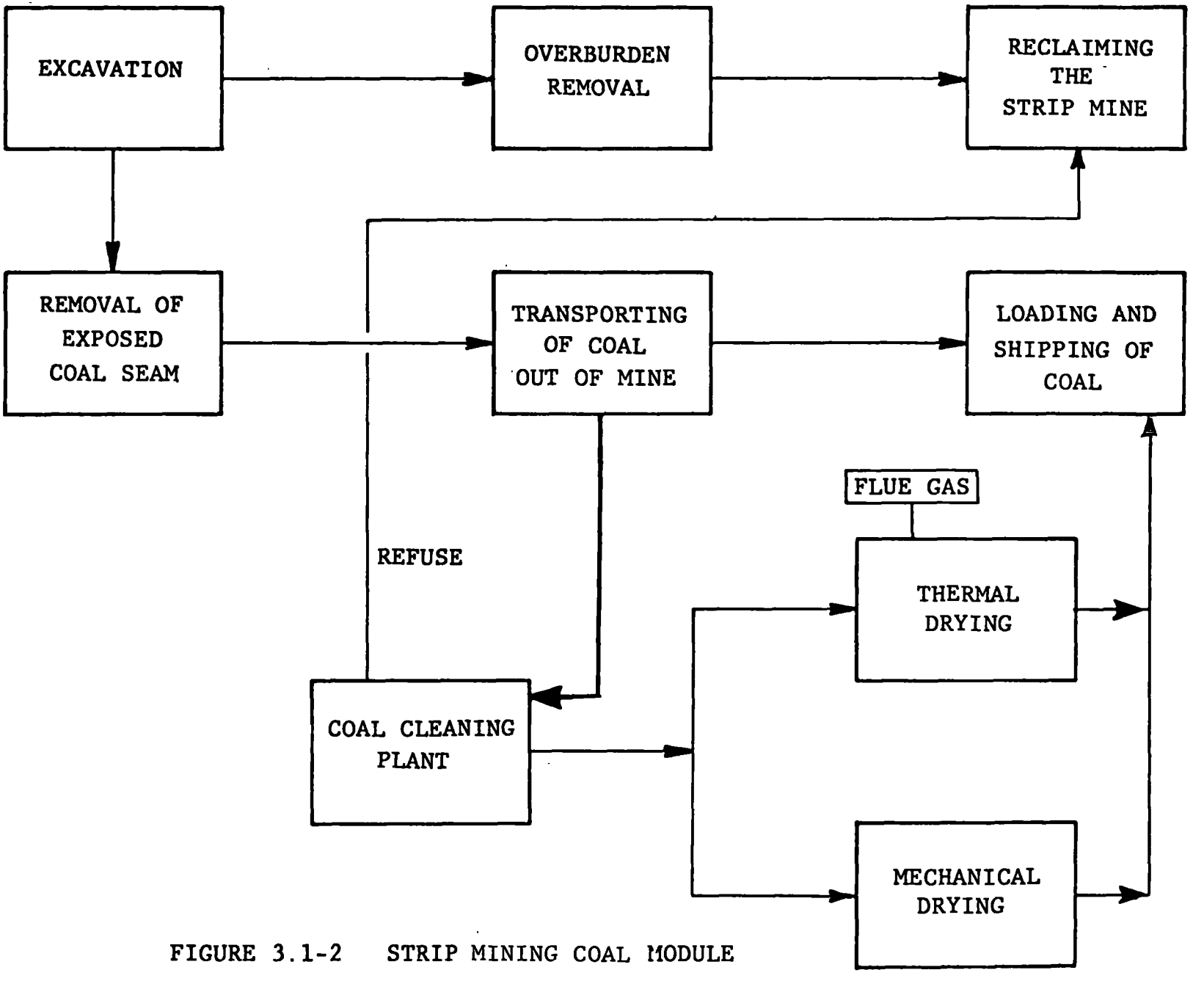

FIGURE 3.1-2 STRIP MINING COAL MODULE

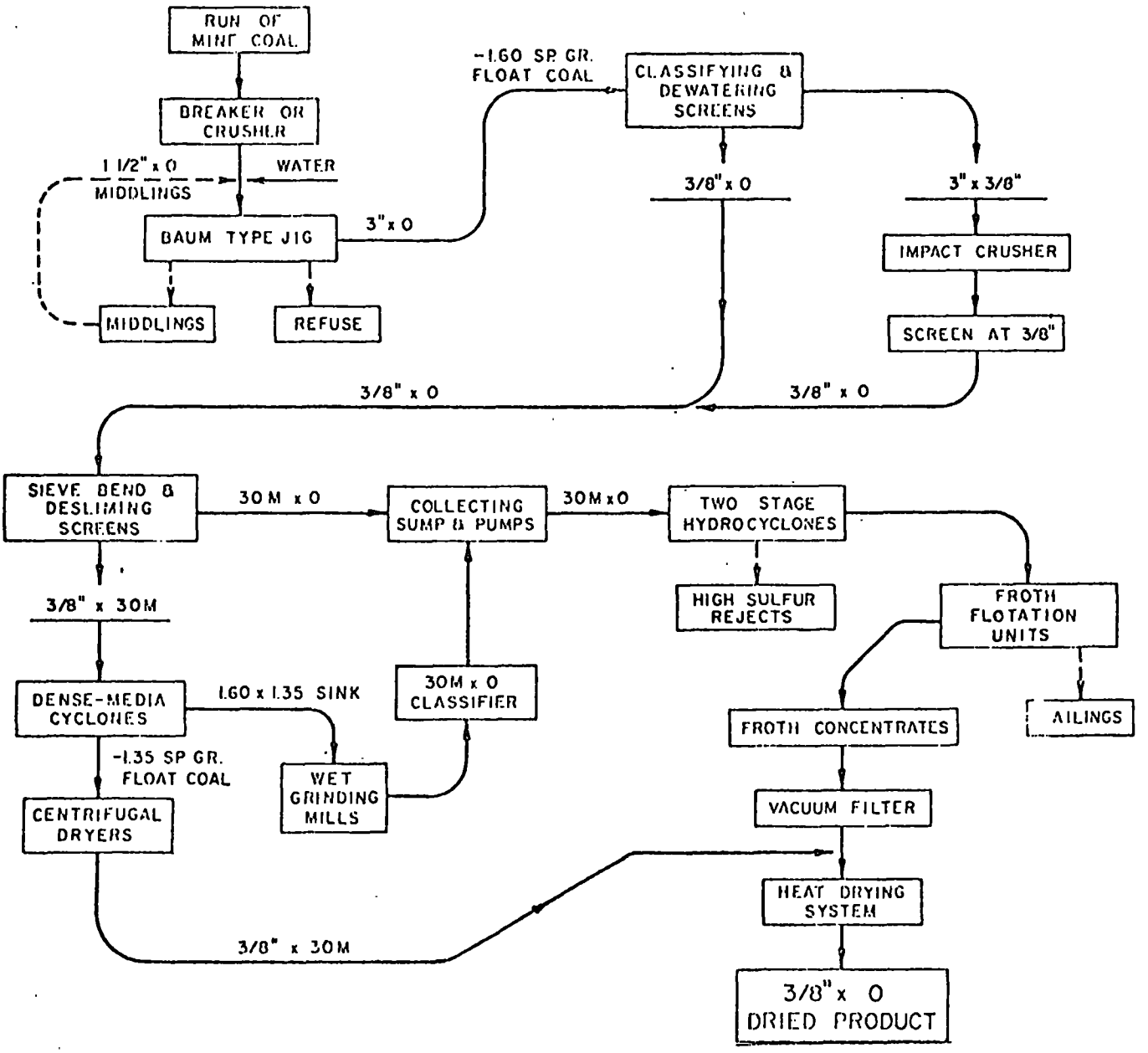

FIGURE 3.1-3
COAL CLEANING PLANT
(Z1-014)

Assumptions used in the strip mining modules include:

(1) The preparation plant is located 3.0 miles from the coal production site (ST-166),

(2) The average depth of overburden is 48 feet and has a density of 100 pounds per cubic foot (HI-083).

(3) The average coal seam is 5.2 feet and has a density of 81 pounds per cubic foot (HI-083),

(4) A typical strip mine pit is 100 feet by 2,000 feet (HI-083),

(5) The run-of-mine coal has a heating value of 12,000 Btu/lb and a sulfur content of 3.0 weight percent (HI-083), and

(6) 20 percent of the run-of-mine coal is removed as ash refuse in the coal cleaning operation (SC-194).

These values are based on national averages. Emissions related to specific coals will vary from the emissions presented in this section depending on coal quality and physical layout of the plant. Western coals would have a lower heating value, a smaller percent sulfur, and a lower quantity of ash associated with the coal (less than 10 percent ash). A strip mining operation without a mechanical cleaning facility would probably be used for this low ash, low sulfur coal.

Module Atmospheric Emissions

Four possible sources of air emissions are associated with the strip mining module:

(1) emissions from diesel-powered vehicles,

(2) particulate emissions from the preparation plant and loading facilities,

(3) fugitive dust emissions from the operations within the mine, and

(4) emissions from thermal drying (if used).

Emissions from the various sources are given in Table 3.1-2.

The diesel fuel demand for the bulldozers is based on the assumption that during the working shifts they are operated 80 percent of the time. The diesel fuel demand for the diesel trucks carrying the coal to the preparation plant is calculated using a factor of 7 gallons per 1000 ton-miles (HI-083). The total diesel fuel consumption is calculated to be 1,540 gallons per day. The emission factors for heavy duty diesel powered vehicles are given in Table 3.1-3. The electric dragline and electric shovels associated with the strip mine operation consume approximately 28,300 kwh per day (ST-166). The electricity to power these shovels is assumed to come from an outside source.

Module grinding and crushing operations are performed out of the pit area. If mechanical cleaning is not involved, the coal will be run through a primary crusher only. If the coal is mechanically cleaned, it is assumed 10 percent of the run-of-mine coal will have to be recrushed in a secondary crusher. The fugitive particulate emission factor for primary crushing is 0.1

TABLE 3.1-2

MODULE EMISSIONS

Strip Mining Coal Module

Basis: 6,300 ton/day R.O.M. coal

	Emissions (lb/day)				
Source	Particulates	SO_2	CO	Hydrocarbons	NO_x
Vehicle Emissions	20	41	344	66	566
Overburden Removal*	1160	--	--	--	--
Primary Crushing*	126	--	--	--	--
Loading and Unloading at the Preparation Plant**	39	--	--	--	--
Loading in the Pit*	506	--	--	--	--
Vehicular Travel*	40	--	--	--	--
Thermal Drying**	505	1290	35	17	603
Vehicle Emissions from Refuse Hauling Operations	0.9	1.8	15	2.9	25
TOTAL	2400	1330	394	86	1190

*80 percent particulate control by water spraying and dust control techniques.

**90 percent particulate control by wet scrubbers.

TABLE 3.1-3

AIR EMISSION FACTORS FOR HEAVY-DUTY DIESEL ENGINES

Pollutant	Emission Factor $lb/10^3$ gal of Diesel Fuel
Particulates	13
Sulfur Oxides (as SO_2)	27
CO	225
Hydrocarbons	37
Nitrogen Oxides (as NO_2)	370
Aldehydes (as HCHO)	3
Organic Acids	3

Source: (EN-071)

pound of suspended particulates per ton crushed. This value is derived from rock handling operations (EN-071). The emissions from the primary crusher are assumed to 80% reduced by use of water sprays. The coal to the secondary crusher is completely wetted by water sprays. The fugitive dust from the secondary grinding operation is therefore assumed to be negligible.

Other fugitive dust sources at the preparation plant are the loading and unloading facilities. An uncontrolled emission factor of 0.4 pound per ton unloaded is used for the entering raw coal and the exiting dried coal. This emission factor was originally derived from the unloading of coal at a coke plant (EN-071). It is assumed the mechanically dried coal and the ash refuse emit 80% less dust due to their greater moisture content. Both loading and unloading facilities are equipped with a negative pressure apparatus used in conjunction with a wet scrubber for 99% reduction of the dust emission caused by loading and unloading. The preparation plant is also equipped with a fabric air filtering system. The particulate emissions from within the plant are difficult to quantify and highly variable; however, it is assumed that the dust emissions from the preparation plant are negligible due to the use of a fabric filter.

Fugitive dust from within the mine is also difficult to quantify. It is quite variable and depends upon climatic conditions. Uncontrolled dust emissions from overburden disposal are estimated at 5,800 lb per day (EN-204). This emission includes dust from blasting, dust from dragline operations, and dust from the operation of the two 385 hp bulldozers. The dust is assumed to be reduced approximately 80 percent by judicious use of water spraying (EN-204). The fugitive dust emission factor of 0.4 lb per ton is also used for the in mine loading of diesel trucks by the electric loading shovels (EN-071). This emission factor is assumed to include the emissions from the two 300 hp bulldozers

in the mine. Fugitive dust created by vehicle traffic within the mine is estimated at 200 lbs per day (EN-204). Windage losses are assumed negligible. Dust from the loading operation and vehicle traffic is also assumed to be reduced by 80 percent as a result of water spraying (EN-204).

Approximately 1.3 percent of the thermally dried coal is burned in the thermal dryer (HI-083). For the strip mining module, this would be 34 tons per day. Thermal dryers presently being used in the coal industry are classified as fluidized bed, multilouver, and flash drier types (Table 3.1-4). The strip mining module uses a fluidized bed type thermal dryer. The cleaned coal which is fired in the thermal dryer is assumed to have a sulfur content of 1.0 wt percent (HI-083). The emission factors utilized to determine emissions from the coal-fired thermal dryer are given in Table 3.1-5. Particulates from the thermal dryer are controlled by a wet scrubber. Baghouses are explosion hazards and not considered suitable for this type of operation.

Additional emissions result from hauling the ash refuse from the preparation plant to the mining reclamation site. The transportation is assumed done by 55-ton capacity diesel trucks. The reclamation site is assumed to be three miles from the preparation plant. The added diesel consumption is calculated to be 67 gallons per day (HI-083).

TABLE 3.1-4

THERMAL DRYERS

	Percent Used in Coal Industry[1]	Particulate Emission Factor lb/ton Uncontrolled[2]
Fluidized Bed	67	20
Multilouver	22	25
Flash Drier	11	16

[1] (HI-083)
[2] (EN-071)

TABLE 3.1-5

EMISSION FACTORS FOR THERMAL DRYING WITH A FLUIDIZED BED DRYER

Pollutant	lb/ton of Coal Combusted Uncontrolled	Reference
SO_2	38 S*	BA-234
NO_x	18	BA-234
CO	1	EN-071
Hydrocarbons	0.5	EN-071
Aldehydes	0.005	EN-071

* S Equals the Weight Percent Sulfur in Coal

Assuming 99% reduction with controls, the particulate emission factor will be 0.2 lb/ton of coal run through the fluidized bed dryer (EN-071). This is based on a dryer controlled with a cyclone and a wet scrubber.

3.1.2 Room and Pillar Mining Module

Module Basis

The basis for the room and pillar coal mining module is a cleaned coal production rate of 5,000 tons per day. Assuming a 20 percent waste removal in the physical coal cleaning operation and a thermal dryer fuel demand of 1.3% of the thermally dried coal, the run-of-mine coal is determined to be 6,300 tons per day. In 1972, 70% of all coal mined undergound was mechanically cleaned (US-144). A summary of the emissions from the room and pillar mining module is shown in Table 3.1-6. Two sets of emissions are presented for the room and pillar mine, the difference being the inclusion of emissions from burning refuse piles.

Module Description

The room and pillar mine module is a typical shaft-type mine as shown in Figure 3.1-4. The mine is assumed to be in steady-state operation. This means that the shafts have been drilled and the mine is producing coal on a regular basis. The coal is mined by five electrical continuous miners. The mined coal is crushed and conveyed to the preparation plant on the surface. The entire mine system is ventilated by air at a rate of one million scfm.

In the preparation plant the coal is crushed and screened, and the oversized coal chunks are routed through a secondary crusher. Approximately 10% of the run-of-mine coal is assumed to require secondary crushing. After crushing, the coal is physically washed to remove the ash and part of the sulfur as sulfur pyrites. Fifty percent of the cleaned

TABLE 3.1-6

SUMMARY OF ATMOSPHERIC EMISSIONS

Room and Pillar Coal Mine Module
Basis: 6,300 ton/day R.O.M. Coal

Air Emissions	lb/day	lb/day*
Particulates	936	12,700
SO_2	1,290	18,900
NO_x	690	6,490
CO	85.2	35,300
Hydrocarbons	53,200	59,100

*Includes emissions from burning refuse piles.

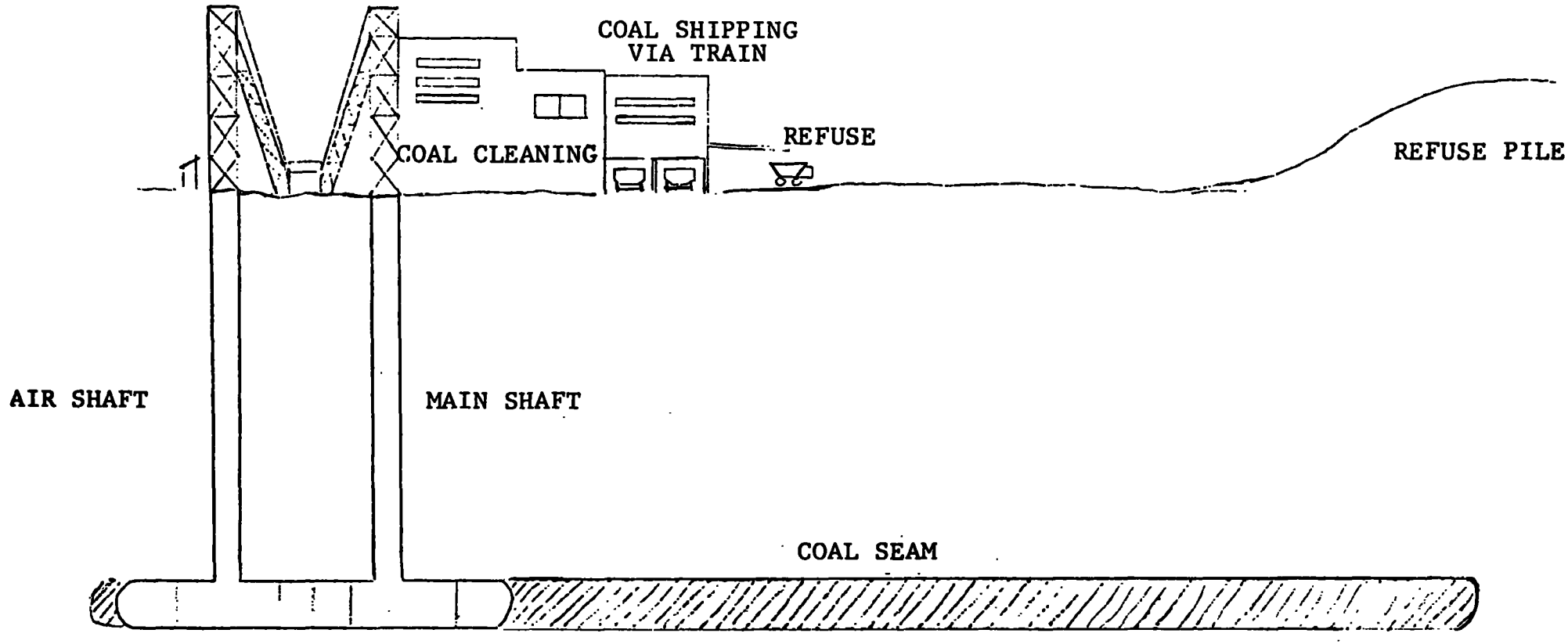

FIGURE 3.1-4

TYPICAL SHAFT-TYPE MINE

coal is then thermally dried and fifty percent mechanically dried. The amount of coal thermally dried depends on the demand for low moisture coal. The cleaned coal is stored in bins and then loaded on unit trains or barges for transport to end use or conversion facilities.

The ash refuse from the physical cleaning operation is hauled via truck to a refuse dump assumed to be located approximately one mile from the preparation plant. The refuse is reclaimed by the use of a 385 hp bulldozer. A block flow sheet for room and pillar mining operations is shown in Figure 3.1-5. Cleaning operations are the same as those shown earlier in Figure 3.1-3.

The following assumptions are used in establishing the room and pillar module:

(1) The coal mine emits methane at a rate of 200 ft^3/ton of coal mined (DE-148).

(2) Ventilated air dust emissions will meet the Federal effluent air quality standard concentration of 2.0 mg/m^3 (HI-097).

(3) The run-of-mine coal has a heating value of 12,000 Btu/lb and a sulfur content of 3.0 wt % (HI-083).

(4) Twenty percent of the run-of-mine coal is removed as ash refuse in the coal cleaning operation (SC-194).

These values are based on national averages.

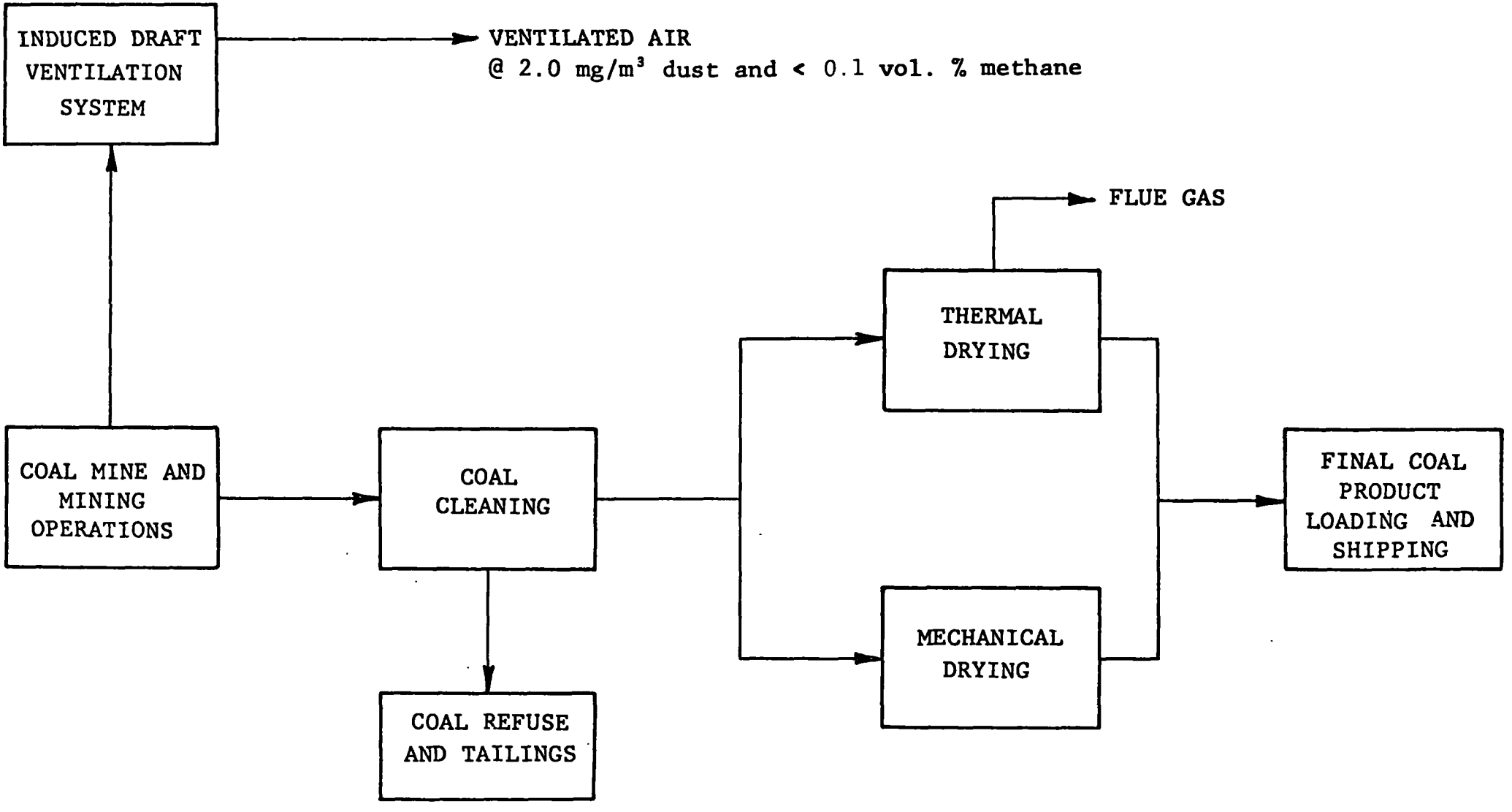

FIGURE 3.1-5 ROOM AND PILLAR COAL MINE

Module Atmospheric Emissions

In the room and pillar mine module there are six possible sources of air emissions: (1) mine ventilation system, (2) thermal dryer, (3) final coal product loading operations, (4) refuse transfer system from the preparation plant, (5) diesel-powered vehicles, and (6) burning refuse. The module emissions from the various sources are shown in Table 3.1-7.

The vented air is calculated to have a flow of one million cubic feet per minute. This value is based on a design criteria set to keep the methane concentrations below 0.1 vol percent of the air in the mine (TR-049). The methane production rate in the underground mine module is 200 cubic feet per ton of coal mined (DE-148). Therefore, the total methane emission rate is calculated as 880 cubic feet per minute. The ventilation air in the mine is produced by an induced draft system equipped with a large electric exhaust fan. The ventilated air is exhausted to the atmosphere with no further treating.

Particulate emission levels in the mine are maintained at the federal standard of 2.0 mg per cubic meter (HI-097). Particulate emissions from the continuous miners at the mine face may reach levels as high as 40 mg per cubic meter (TR-049). The particulate matter generated by the continuous miners are, however, controlled by air scrubbing systems equipped on the miners. The air scrubbing systems are Venturi-type scrubbers with mini-cyclones and water spraying apparatus (HI-097). Ventilation air rates at the mine face are maintained between 6,000 and 20,000 scfm to dilute any methane that is produced from the mining operation (TR-049). Fugitive dust within the mine also results from primary crushing. The module primary crusher has a dust emission factor of 0.1 lb of suspended solids per ton

TABLE 3.1-7

MODULE EMISSIONS

Room and Pillar Coal Mine Module

Basis: 6,300 ton/day R.O.M. Coal

Source	Emissions (lb/day)				
	Particulates	SO_2	CO	Hydrocarbons	NO_x
Ventilated Air	180	-	-	53,200	-
Thermal Drying*	505	1,280	35	17	603
Coal Loading*	18	-	-	-	-
Transfer & Refuse	230	-	-	-	-
Vehicle Emissions	2.9	6.0	50	9.6	83
Burning Refuse	11,750	17,600	35,200	5,800	5,800
TOTAL	12,700	18,900	35,300	59,000	6,490

*99% particulate control by wet scrubber

crushed (EN-071). This factor is originally derived from rock crushing operations. This dust is assumed to be reduced 80% by use of water sprays. The final quantity of suspended dust is diluted in the ventilation air.

The fugitive dust from the secondary grinding operation in the preparation plant is generally quite minor and assumed negligible in this room and pillar module. The reason for this assumption is that the coal which is being crushed is completely wetted and therefore is no real source of particulates.

The thermal drying operation for room and pillar mining is the same as for the surface mining module. It is assumed that 50% of the mechanically cleaned coal is thermally dried. A fluidized-bed thermal dryer is used. The thermal dryer will combust 34 tons per day of coal. The emission factors for the thermal dryer are the same as those shown in Tables 3.1-4 and 3.1-5. Particulates from the thermal dryer are controlled by a Venturi wet scrubbing system. Baghouses are not used due to the explosion hazard. The thermally dried coal and mechanically dried coal are stored in enclosed bins before loading on unit trains or barges. Fugitive dust within the preparation plant is quite variable and difficult to quantify. The atmospheric emissions are controlled by a fabric filter and are assumed to be negligible.

The loading operations are a source of considerable particulate emissions. A particulate emission factor of 0.4 pounds per ton loaded is used for the thermally dried coal. This emission factor is cited as the emission factor for loading coal into hoppers at a coke plant (EN-071). It is assumed the mechanically cleaned coal will have 80% less emissions due to the fact that it has a greater moisture content. To reduce the particulate emissions to the atmosphere, a negative pressure

hood equipped with a wet scrubber is employed. This type of system reduces particulates 99% (EN-071).

Fugitive dust emissions also result from the transfer of refuse from the coal cleaning plant to the land reclamation refuse dump. An uncontrolled emission factor of 0.4 lb per ton is assumed for loading and unloading operations, assuming the refuse has characteristics similar to coal. Windage losses are assumed to be negligible. Loading and unloading fugitive losses are assumed to be reduced 80% by water spraying (EN-204). Controlled fugitive dust emissions from 46 vehicle miles per day due to refuse transport are estimated at 4.0 pounds (EN-204). Controlled fugitive dust for reclamation operations is calculated to be 25 pounds per day. The calculated value of fugitive dust from the reclamation operation is based on data taken from disposal of overburden for an oil shale operation (EN-204). Dust control is by water spraying.

Vehicle emissions include combustion emissions from the diesel trucks hauling the refuse and the bulldozer excavating the refuse pile. The refuse trucks carry 55 tons and have a net weight to gross weight ratio of 0.57. The module diesel fuel consumption is calculated to be 223 gallons per day. This value is based on a fuel consumption rate by the trucks of seven gallons per 1000 ton-miles and assumes that one bulldozer rated at 385 hp is operated eight hours daily (HI-083). The emission factors for diesel fuel combustion are shown in Table 3.1-8. Emissions calculated from aldehyde and organic acid emission factors are considered as hydrocarbons.

The final air emission source is burning refuse piles. The emission factors, given in Table 3.1-9, are calculated from 1968 data on burning refuse piles (US-144, CO-168). These emissions are not necessarily related to a refuse production rate but rather to the total amount of refuse accumulated.

TABLE 3.1-8

AIR EMISSION FACTORS FOR HEAVY-DUTY DIESEL ENGINES

Pollutant	Emission Factor $lb/10^3$ gal of Diesel Fuel
Particulates	13
Sulfur Oxides (as SO_2)	27
CO	225
Hydrocarbons	37
Nitrogen Oxides (as NO_2)	370
Aldehydes (as HCHO)	3
Organic Acids	3

Source: (EN-071)

TABLE 3.1-9

EMISSION FACTORS FOR BURNING REFUSE PILES

(CO-168, US-144)

Pollutant	Emission Factor (lb/ton of Refuse)
CO	17.8
NO_x	2.95
Hydrocarbons	2.95
SO_2	8.89
Particulates	5.94

3.1.3 In-Situ Coal Production Module

Present work in the area of in-situ coal gasification has been in experimental and developmental stages. On the basis of technical and economic experience to date, it is difficult to foresee when commercial operations will be a reality. However, in-situ coal gasification could be of value in areas where coal is too deep to strip mine and the bed is too thin to economically underground mine. Data for this report was taken from field tests done by the Bureau of Mines at Hanna, Wyoming (KA-124).

Module Basis

The in-situ module is based on a fuel gas production rate of 10^9 Btu/day. The fuel gas has a heating value of approximately 250 Btu/scf (KA-124). A summary of the environmental impact is given in Table 3.1-10.

Module Description

The in-situ coal combustion equipment arrangement is much the same as in-situ oil production. There is an injection well for introducing the air or oxidizer into the coal bed. The coal is combusted in the bed forcing a low Btu fuel gas along with vaporized heavy hydrocarbons into a production well. On the surface the fuel gas will be separated from the coal tar products. If necessary, the fuel gas could be further treated for sulfur removal. The module presented here will assume the fuel gas needs no further treating.

TABLE 3.1-10

SUMMARY OF ATMOSPHERIC EMISSIONS

In Situ Coal Production Module

Basis: 10^9 Btu/day Fuel Gas Produced

Air Emissions	lb/day
Particulates	5.5
CO	30.0
Hydrocarbons (CH_4)	65.0

Module Atmospheric Emissions

The only anticipated air emissions from the in-situ coal production site are fugitive emissions from high-pressure equipment and from vehicle movement around the surface facilities. Emission factors for the high-pressure equipment cannot be derived based on the Hanna, Wyoming, data because of the large leakage losses due to inadequate seals around the various wells drilled into the coal. A total environmental emission of 0.22 volume percent of the fuel gas produced is suggested. This suggested emission factor is based on a reported value for miscellaneous hydrocarbons from gas wells (BA-234). The composition of the fuel gas is given in Table 3.1-11. The total volumetric flow rate of the fuel gas is calculated to be 4×10^6 scf/day for a production of 10^9 Btu/day. A controlled fugitive dust emission rate is estimated at 5.5 lb/day (EN-204). This factor is based on 5 miles of unpaved roads with 50 vehicle miles traveled daily. It should be noted that plans for in-situ coal gasification include connection with an on-site power plant facility. The compressor driver in the module is assumed to be powered with steam or electricity from this power plant.

TABLE 3.1-11

TYPICAL GAS ANALYSIS OF IN-SITU COAL FUEL GAS

Source: Hanna In-Situ Gasification Experiment

Component	Mole Percent
H_2	8.2
O_2	1.0
N_2	50.7
CH_4	16.5
CO	4.3
C_2	1.6
CO_2	17.1
Other	0.5

Source: (KA-124)

3.2 Oil Shale Extraction Modules

Many of the techniques utilized in the oil shale industry are essentially the same as in the coal industry; however, the amount of solids handled is much greater. In this section, three types of shale oil extraction techniques will be examined for possible air emissions. The techniques are surface mining, room and pillar mining, and in-situ shale oil production.

3.2.1 Surface Mine Module

The techniques used in the surface mining of oil shale are very similar to strip mining of coal. Therefore, similar emission factors to those in the strip mining of coal will be used to calculate air emissions from this oil shale module.

Module Basis

The shale oil surface mining module is based on a removal rate of oil shale equal to 73,700 tons/day. This is enough oil shale to produce 50,000 bbl/day of upgraded shale oil. The oil shale has an oil content of 30 gallons/ton of shale. This value is believed to be near the minimum allowable oil content to make oil shale processing economically feasible (US-093). A summary of the environmental impact is given in Table 3.2-1.

Module Description

The surface mining oil shale module is assumed to be in a steady-state operation. This means the pit has been opened and oil shale is being removed at a rate of 73,700 tons/day. The oil shale bed is assumed to be 40 ft thick and has a density of 90 lbs/cu ft (US-093).

TABLE 3.2-1

SUMMARY OF ATMOSPHERIC EMISSIONS

Oil Shale Surface Mining Module

Basis: 73,700 tons/day of Processable Oil Shale

Air Emissions	lbs/day
Particulates	18,100
SO_2	467
NO_x	6,400
CO	3,890
Hydrocarbons	744

The overburden is assumed to be 450 ft and have a density of 100 lbs/ cu ft (HI-083). The overburden is also being removed by trucks to a reclaiming site assumed one mile away. The overburden after being hauled to the disposal site is assumed graded by two 385 hp bulldozers operating eight hours daily.

The oil shale itself is assumed hauled by truck 2,000 feet in the oil shale pit to the primary crusher and conveying system. The hauling is being done by 55-ton trucks with a fuel consumption of 7 gallons/1000 ton miles and a net weight to gross weight ratio of 0.57 (HI-083). The oil shale is loaded in the mine by electric shovels.

The oil shale, after being crushed in the pit area, is transported out of the mine to the shale oil plant site. The oil shale can be transported by conveyors or be pumped as a slurry of about 50 percent solids (US-093). This module will assume conveyor transport. The oil shale will be further crushed through secondary and tertiary crushing and screening operations as a preparation for shale oil extraction. Typical steps involved in oil shale surface mining are shown in Figure 2.2-2.

Module Atmospheric Emissions

There are four possible sources of air emissions from the oil shale production module: (1) excavation and blasting, (2) fugitive dust emissions from transporting the oil shale and overburden, (3) vehicle emissions from the combustion of diesel fuel, and (4) primary, secondary, and tertiary crushing and screening operations. Emissions from the various sources are listed in Table 3.2-2.

Dust emissions from excavation and blasting are variable and uncertain. The uncontrolled particulate emission rate is estimated at 7,290 pounds per day (EN-204). These emissions

TABLE 3.2-2

MODULE EMISSIONS

(lb/day)

Oil Shale Surface Mine Module

Basis: 73,700 ton/day of Processable Oil Shale

	Particulates	SO_2	CO	Hydrocarbons	NO_x
Excavation & Blasting*	1,460	-	-	-	-
Transporting Fugitive Dust					
- Truck Loading & Unloading*	11,800	-	-	-	-
- Truck Hauling*	61	-	-	-	-
- Conveying	neg	-	-	-	-
Vehicle Emissions	225	467	3,890	744	6,400
Primary Crushing*	1,470	-	-	-	-
Secondary & Tertiary Crushing**	3,100	-	-	-	-
TOTAL	18,100	467	3,890	744	6,400

* 80 percent dust control from fugitive dust control techniques

** 99 percent dust control from bag houses or wet scrubbers

can be reduced approximately 80% using various particulate control techniques (EN-204). Therefore, the final module fugitive emission rate for oil shale excavation and blasting is 1,460 lbs per day.

Fugitive dust emissions from transporting the oil shale and overburden can occur during the truck hauling or the conveying operations. Assuming windage losses negligible, the major dust source will be the loading and unloading of trucks. The uncontrolled particulate emission factor used for each loading and each unloading operation is 0.4 lbs per ton of material loaded or unloaded (EN-071). This emission factor comes from the uncontrolled loading of coal hoppers at a coke plant and is suggested as a basis for evaluation of oil shale loading operations. Once again 80% dust control is believed possible due to settled dust and judicious use of water spraying. Fugitive dust due to vehicular traffic on unpaved roads within the mines is estimated at 61 pounds per day (EN-204). The conveying system is covered, and thus the fugitive dust emissions from it can be assumed negligible (HI-083).

Diesel fuel consumption for the 55-ton trucks is calculated from a factor of 7 gal/1,000 ton-mile and a net weight to gross weight ratio of 0.57 (HI-083). The diesel consumption for trucks is calculated to be 16,900 gal/day. The diesel fuel consumption of the bulldozers is calculated to be 390 gal/day. Emission factors for diesel fuel consumption are the same as those given in Table 3.1-8.

The primary crushing in the mine has an uncontrolled suspended solids emission factor of 0.1 pound per ton crushed (EN-071). As previously mentioned this factor was originally derived from rock handling operations. The suspended dust is assumed 80% controlled by water or chemical spraying. After the initial crushing the oil shale is transported out of the strip mine on a covered conveyor. Secondary and tertiary crushing and screening are performed in an enclosed building equipped with either a baghouse or wet scrubber giving 99% control of suspended dust emitted from within. The uncontrolled suspended solids emission factors for secondary and tertiary crushing and screening are 0.6 pounds per ton and 3.6 pounds per ton of oil shale crushed, respectively (EN-071). These emissions factors also are derived from rock-handling processes.

3.2.2 Room and Pillar Mine Module

Room and pillar mining of oil shale is very similar to room and pillar mining of coal. Therefore, similar emission factors will be used to calculate air emissions for the oil shale module.

Module Basis

The shale oil room and pillar mine module is based on a removal rate of oil shale equal to 73,700 ton/day. This is enough oil shale to produce 50,000 bbl/day of shale oil (US-093). The oil shale has an oil content of 30 gallons/ton of shale. This value is believed to be near the minimum allowable oil content to make oil shale processing economically feasible (US-093). A summary of the environmental impact is given in Table 3.2-3.

Module Description

The room and pillar mine module is assumed to be in steady-state operation. This means the mine development has been completed and the mine is producing oil shale at a rate of 73,700 tons daily. The oil shale bed is assumed 40 feet thick and has a density of 90 lb/cu ft (US-093). The oil shale is broken up by explosives and loaded into diesel-powered 55-ton trucks by electric front-end loaders. The trucks transport the oil shale to the primary crusher located in the mine where the oil shale is reduced to sizes below 10 inches (US-093). From there the oil shale is conveyed to the surface and fed to secondary and tertiary crushing and screening operations. The final crushed oil shale product is then transported to a nearby oil shale processing plant. The mine is ventilated by two 1,000,000 cfm fans (US-093). A flow sheet of room and pillar mining is shown in Figure 3.2-2.

TABLE 3.2-3

SUMMARY OF ATMOSPHERIC EMISSIONS

Oil Shale Room and Pillar Mine Module

Basis: 73,700 ton/day of Processable Oil Shale

Air Emissions	lb/day
Particulates	3,680
SO_2	11
NO_x	154
CO	94
Hydrocarbon	18

OIL SHALE UNDERGROUND MINE

(BASIS: OIL SHALE FOR 50,000 BBL/DAY RETORTING PLANT)

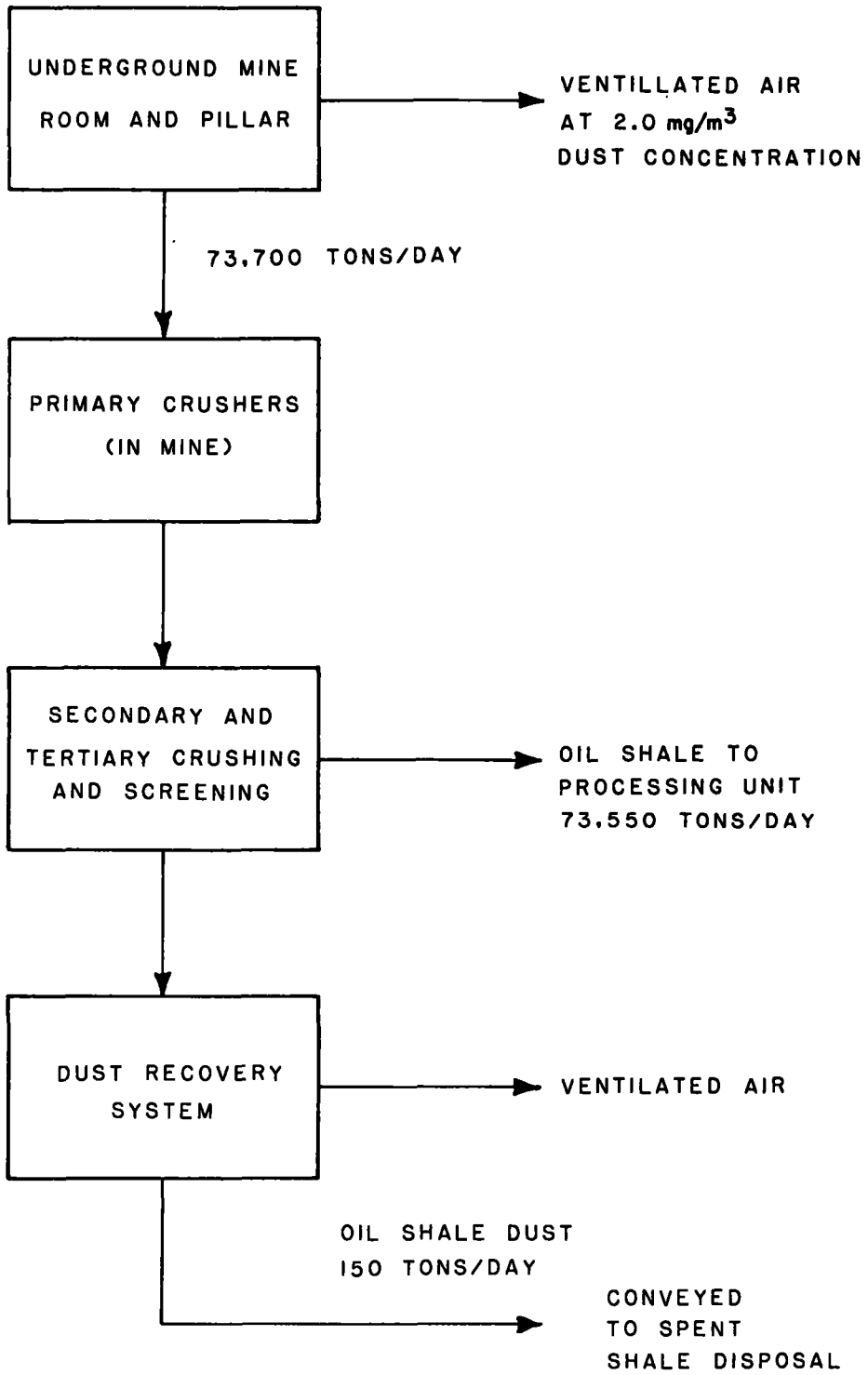

FIGURE 3.2-2

Module Atmospheric Emissions

There are four possible sources of emissions from the room and pillar oil shale mine: (1) blasting and primary crushing in the mine, (2) secondary and tertiary crushing and screening operations, (3) vehicle emissions, and (4) miscellaneous fugitive dust emissions. Emissions from the specific sources are listed in Table 3.2-4.

Blasting, primary crushing, and vehicle emissions leave the mine with ventilation air. Water spraying is used to reduce fugitive dust emissions from all three sources in the mine. The dust level in the mine is assumed to be at the maximum level set by the federal government of 2.0 mg/m^3 (HI-097), and therefore the total dust emitted from this mine is calculated to be 360 lb/day.

The 55-ton trucks are assumed to travel 1,500 feet between extraction and primary crushing in the mine (US-093). The trucks have a diesel fuel consumption of 7 gallons/1000 ton mile. Using a factor of a net weight to gross weight ratio of 0.57, the diesel fuel consumption is calculated to be 373 gallons/day. The vehicle emissions are calculated using emission factors given in Table 3.1-8. The crushed oil shale is transported out of the mine on covered conveyors. Dust emissions from the conveyors are negligible (HI-083).

Secondary and tertiary crushing and screening operations on the surface are assumed to be enclosed and to be 99% controlled by the use of either fabric filters or wet scrubbers (EN-071). The particulate emission factors for uncontrolled secondary and tertiary crushing and screening are 0.6 pounds of suspended solids and 3.6 pounds of suspended solids per ton of material crushed, respectively (EN-071). These emission factors were originally derived from rock-handling operations.

TABLE 3.2-4

MODULE EMISSIONS

(lb/day)

Oil Shale Room and Pillar Mine Module

Basis: 73,700 ton/day of Processable Oil Shale

	Particulates	SO_2	CO	Hydrocarbons	NO_x
Blasting & Primary Crushing	360	-	-	-	-
Secondary & Tertiary Crushing & Screening*	3,100	-	-	-	-
Vehicle Emissions	5.5	11.2	93.5	17.9	154
Miscellaneous Fugitive Dust**	220	-	-	-	-
TOTAL	3,680	11.2	93.5	17.9	154

* 99 percent controlled by either fabric filters or wet scrubbers

** 80 percent controlled by dust control techniques

Fugitive dust emissions are estimated at about 220 lb/day (EN-204). These dust sources include 5 miles of unpaved roads on the surface and permanent disposal of the oil shale. These fugitive sources are assumed controlled by water spraying or other dust control techniques.

3.2.3 In-Situ Shale Oil Production

In-situ type shale oil production is presently only in the experimental stages and there is no assurance when commercial technology will be developed. During the past 20 years there have been several in-situ retorting programs conducted by both industry and government. Problems relating to insufficient natural permeability of the oil shale and inability to control the process have arisen. Additional field-scale operations are needed because of the difficulty in designing useful laboratory-scale experiments.

Module Basis

The in-situ shale oil production module is based on a production rate of 50,000 bbl/day of upgraded shale oil. The summary of the module air emissions is given in Table 3.2-5.

Module Description

A conceptual design of an in-situ retorting operation is given in Figure 3.2-3. Following are the four essential steps in in-situ retorting:

(1) Drilling of wells in front of the retorting zone

(2) Fracturing of the oil shale

TABLE 3.2-5

SUMMARY OF ATMOSPHERIC EMISSIONS

In-Situ Shale Oil Production Module

Basis: 50,000 bbl/day of Upgraded Shale Oil

Air Emissions	lb/day
Particulates	30,000
SO_2	66,800
NO_x	12,400
CO	116,000
Hydrocarbons	13,450

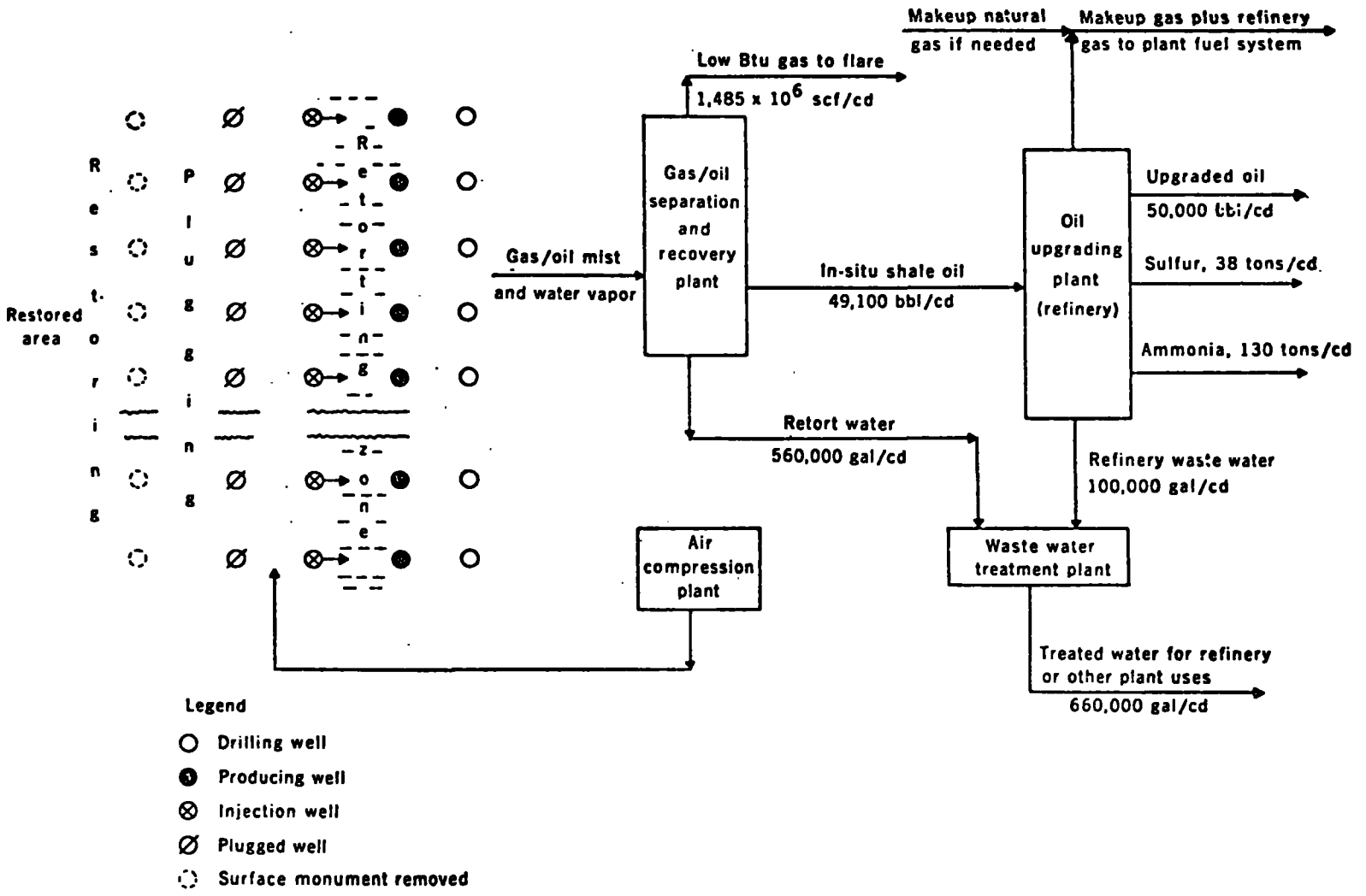

Flow Diagram of 50,000-Barrel-Per-Calendar-Day In Situ Recovery System

FIGURE 3.2-3 IN-SITU SHALE OIL PRODUCTION MODULE

Source: (US-093)

(3) Injection of air and recirculation gas and formation of a temperature and pressure gradient within the oil shale

(4) Recovery of the product

The air is compressed to about 100 psig by a steam-driven compressor. The steam is generated in an on-site shale oil upgrading plant. In-situ shale oil is recovered along with retort water and a low-Btu gas. The heating value of the gas is below that required for a self-sustaining flame; therefore, the gas must be incinerated in an existing boiler or in a large heater. Before burning, the gas must be treated for sulfur removal. Removal of the hydrogen sulfide is of concern because conventional processes are unable to remove H_2S at concentrations less than 0.1 vol percent from low-pressure gases (EN-204). Advanced technologies will have to be applied to this problem.

Module Atmospheric Emissions

A major source of air emissions from the in-situ retorting process is the flared low Btu gas from the gas/oil separation and recovery plant. The flared gas flow rate is approximately 1,485 x 10^6 scf/day (US-093). The expected composition of this gas before treating is given in Table 3.2-6. The H_2S is assumed to be reduced to a 250 ppm concentration (EN-204). The hydrogen sulfide is combusted to SO_2 in the flare or incinerator. The CO in the gas is assumed to be reduced 99 percent during incineration (EN-204). The particulate emissions factor from the flared gas is assumed equal to the emission factor for the firing of a fuel gas, 0.02 lb/1,000 scf (EN-071).

TABLE 3.2-6

CHARACTERISTICS OF GASES FROM IN-SITU RETORTING [1]

Component	Concentration Volume-Percent
Nitrogen	73.7
Oxygen	3.4
Propane	0.2
Carbon Dioxide	21.4
Carbon Monoxide	0.1
Hydrogen Sulfide	0.1
Butanes	0.1
Methane	0.5
Ethane	0.5

[1] Heating value approximately 30 Btu/scf,
Yield from operation at level of 50,000 barrels/day upgraded shale oil approximately 1.5×10^6 scf/CD

Source: (US-093)

The hydrocarbon emission factor for the flared low-Btu gas is assumed to be equal to the hydrocarbons resulting from combustion of an equivalent amount (heating value) of natural gas. This value is calculated by multiplying the hydrocarbon emission factor for natural gas by the ratio of the heating value of the low Btu gas to that of a fuel gas (EN-071). This calculated emission factor is 0.0012 lbs/1,000 scf. The nitrogen oxide emission is estimated as 12,400 lbs/day (EN-204).

Miscellaneous fugitive gas emission at the wellhead is estimated at 0.22 volume percent of the fuel gas. This emission factor is based on reported miscellaneous gas losses occuring at gas wells (BA-234). There will also be miscellaneous hydrocarbon emissions due to the production of the liquid shale oil. The assumed emission factor is 4 lb/10^3 gallon of oil produced (BA-234). Fugitive dust emissions are estimated to be 5.5 lbs/day (EN-204). These emissions are from 5 miles of unpaved roads with 50 vehicle miles traveled per day. The module emissions from various sources are given in Table 3.2-7.

TABLE 3.2-7

MODULE EMISSIONS

(lb/day)

In-Situ Oil Shale Production Module

Basis: 50,000 bbl/day Upgraded Shale Oil Production

	Particulates	SO_2	CO	NO_x	Hydrocarbons
Flared Low Btu Gas (After Sulfur Removal)	30,000	66,200	116,000	12,400	1,780
Miscellaneous Gas Emissions	negl.	582	255	NA	3,420
Fugitive Hydrocarbon Emission for Shale Oil Liquid Production	-	-	-	-	8,250
Fugitive Dust	5.5	-	-	-	-
TOTAL	30,000	66,800	116,000	12,400	13,450

* SO_2 calculated from equivalent H_2S emitted.

3.3 Oil Production Module

Module Basis

The oil production module presented here is based on a typical crude oil production rate of 1,000 bbl/day. This value represents the final crude oil output. The module values in the following sections are determined from this 1,000 bbl/day basis. Modules for both water flooding and steam injection are described. These modules are further divided depending on the percentage of brine in the emulsion removed from the well. A summary of the environmental impact or combinations of these variables is given in Table 3.3-1.

Module Description

The module for oil production is based on one gathering system fed by several oil wells. The wellheads are the plunger lift type equipped with prime movers which operate on electricity. From the gathering system, the oil-brine emulsion is fed into a water knockout tank. To enhance the oil-water separation in the knockout tanks, the oil-brine emulsion is pretreated in a heater treater which destabilizes the emulsion. The light hydrocarbon gases are then removed in an oil-gas separation section consisting of three spherical separation tanks operating at progressively decreasing pressures. The released gas is sent directly to a gas treating plant.

The brine from the emulsion breaking system is combined with the brine from the water knockout tank and run through a flotation cell wastewater treater. The flotation cell treater removes sludge, grit, and oil particles from the wastewater. The treated water is used for either steam generation or water

TABLE 3.3-1

DOMESTIC CRUDE PRODUCTION MODULE

Basis: 1,000 bbl/day Crude Production

AIR EMISSIONS

(lb/day)

Pollutant	Water Flooding Without Heater Treater*	Water Flooding With Heater Treater (5% Brine)	Water Flooding With Heater Treater (50% Brine)	Water Flooding With Heater Treater (85% Brine)	Steam Injection** Heater Treater (5% Brine)	Steam Injection** Heater Treater (50% Brine)	Steam Injection** Heater Treater (85% Brine)
Particulates	2.5	3.2	6.3	10.9	23.4	532.0	3,030
SO_2	5.2	18.3	72.3	155.0	69.2	1,170.0	6,420
CO	43.2	43.8	46.4	50.3	4.5	94.5	529
Hydrocarbons***	114.0	114.0	119.0	126.0	112.0	204.0	641
NO_x	71.5	79.5	114.0	168.0	47.6	956.0	5,320

* Either chemical or electrical emulsion breaking is used

** Assuming all the water from the brine is converted to steam

*** HC emission include emissions calculated from aldehyde emission factors.

flooding. It must be filtered to remove the suspended solids. The solids concentration is lowered as much as possible to eliminate particulate buildup in the injection well. A sand filter is normally used for this purpose. The water is also treated for removal of dissolved H_2S, which contributes to corrosion in the pipes and machinery and is also an atmospheric emission problem. H_2S removal from the wastewater is usually accomplished by countercurrent gas stripping (CH-182).

Storage facility for crude oil from the separation unit is equipped with a vapor recovery system. The vapor recovery system is also tied in with the heater treater to capture any vapor emissions from that unit. The crude oil is transferred from the storage tanks to the pipeline by a lease automatic custody transfer pumping system. This unit also automatically samples the crude for analysis of sediment, water content and oil gravity.

The injection system for either water flooding or steam injection consists of a central high-pressure water pump for water flooding or a steam generator for steam injection and a distribution system. The use of either system is dependent on economics and the characteristics of the crude oil being recovered.

The same flowsheet for an oil production site can be used for either onshore or offshore oil production. This flow diagram is shown in Figure 3.3-1.

CRUDE OIL PRODUCTION

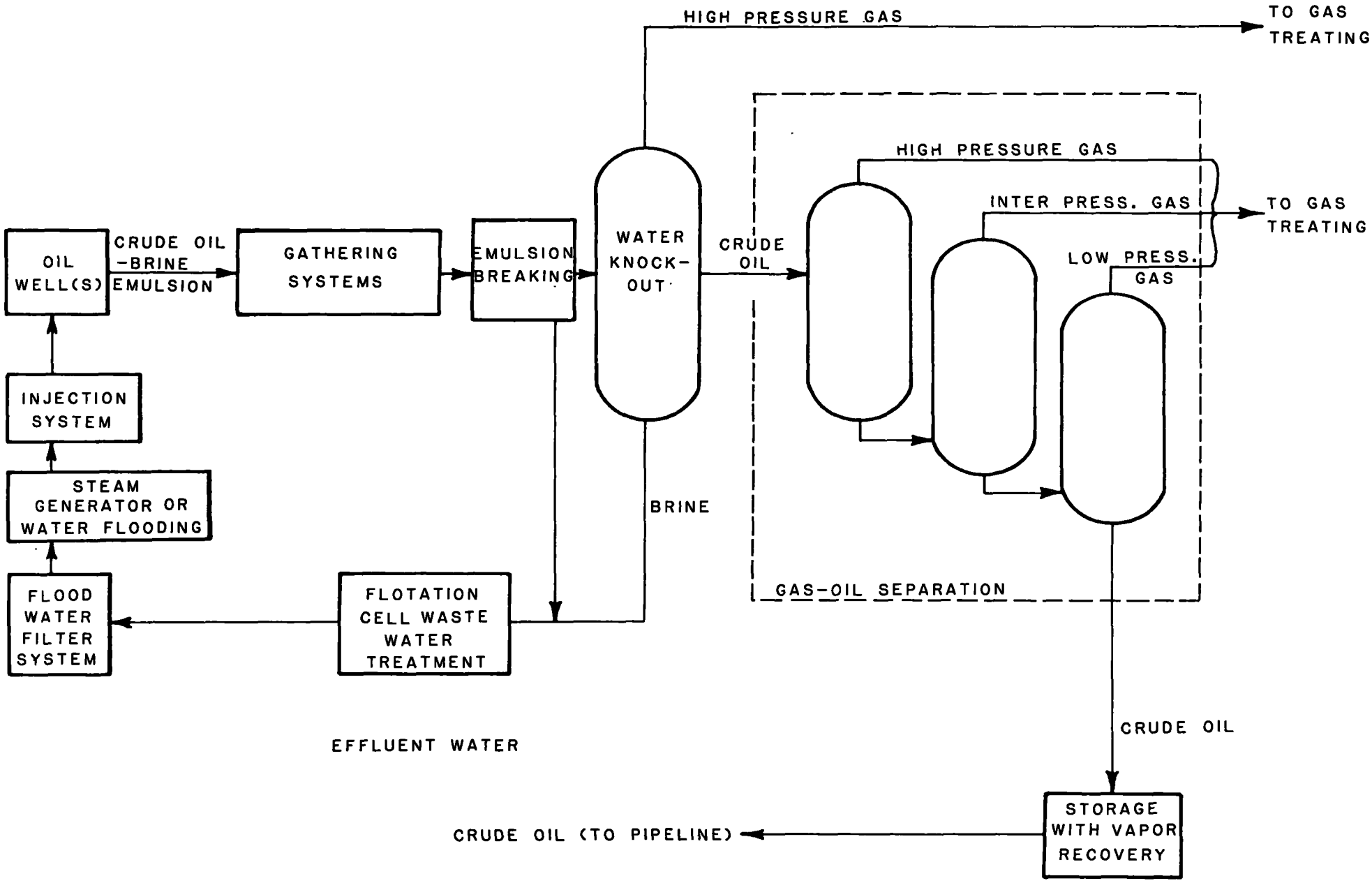

FIGURE 3.3-1

Module Atmospheric Emissions

The air emissions from the oil production module come from three possible sources: (1) the heater treater, (2) the steam generator if steam injection is used or the diesel-operated pump if water flooding is used, and (3) miscellaneous hydrocarbon emissions. The emissions are dependent on the quantity of water or brine in the crude oil. In steam generation for steam injection, it is assumed that all of the brine which has been separated is reinjected. The emissions for the various units involved in oil production are given in Table 3.3-2.

Heater Treater Emissions

The heater treater used for emulsion breaking is a direct-fired heater. The heater is assumed to operate at an 80 percent thermal efficiency. The crude emulsion is preheated in a heat exchanger train which removes heat from the hot crude and brine streams leaving the heater treater. The heater treater is normally operated at about 210°F. The fuel used in the heater is a fuel gas (natural gas) containing about 2,000 ppm hydrogen sulfide. The emission factors for fuel gas combustion are given in Table 3.3-3. The heat requirements for various emulsions are given in Table 3.3-4.

Steam Injection or Water Flooding Emissions

When steam injection is used as a secondary recovery method, a large pollution source is the steam generator. The steam generator selected for illustration in this oil production module is fired with fuel oil containing 0.3 wt. %

TABLE 3.3-2

DOMESTIC CRUDE OIL PRODUCTION MODULE

Air Emissions

(lb/day)

Basis: 1,000 bbl/day Crude Oil Production

	Particulates	SO_2	CO	Hydrocarbons	NO_x	Aldehydes
Heater Treater -						
5% Brine	0.73	13.1	0.63	0.99	8.4	0.11
50% Brine	3.76	67.1	3.20	5.07	43.2	0.56
85% Brine	8.4	150	7.14	11.3	96.6	1.26
Steam Generator -						
5% Brine	22.6	55.7	3.9	3.0	39.1	1.0
50% Brine	528	1,100	91.3	68.5	913	23.0
85% Brine	3,020	6,270	522	392	5,220	130
Vapor Recovery System	-	-	-	Neg	-	-
Wastewater Separators	-	-	-	7.9	-	-
Pumps	-	-	-	73.8	-	-
Compressors	-	-	-	3.8	-	-
Relief Valves	-	-	-	7.9	-	-
Pipeline Valves	-	-	-	11.6	-	-
Miscellaneous Flaring & Fires	0.02	0.38	Neg	0.76	0.05	-
Diesel Pump for Water Flooding	2.5	5.2	43.2	7.1	71.0	0.6

TABLE 3.3-3

AIR EMISSION FACTORS FOR THE COMBUSTION OF NATURAL GAS AND FUEL OIL

	Natural Gas lb/1000 scf	Fuel Oil lb/1000 bbl
Particulates	0.02	970
Sulfur Oxides (as SO_2)	2 S_g*	6,720 S_o**
CO	0.017	168
Hydrocarbons	0.027	126
Nitrogen Oxides (as NO_2)	0.23	1,680
Aldehydes (as HCHO)	0.003	42

* S_g is the equivalent sulfur concentration in the fuel gas (lb/1,000 ft^3).

** S_o is the sulfur weight percent in the fuel oil.

SOURCE: (EN-071)

TABLE 3.3-4

HEATER TREATER HEAT REQUIREMENTS

Basis: 1,000 bbl/day of Final Crude Product

Brine Vol %	Heat Requirement (Btu/day)	Fuel Gas Requirement (scf/day)
5	3.67×10^{7}	3.67×10^{4}
50	1.88×10^{8}	1.88×10^{5}
85	4.20×10^{8}	4.20×10^{5}

TABLE 3.3-5

STEAM GENERATOR HEAT LOADS

Basis: Steam is 80% Vapor

Brine Vol %	Steam Produced (lb/day)	Heat Requirement (Btu/day)	Fuel Oil Requirement (bbl/day)
5	1.44×10^{5}	1.47×10^{8}	23.3
50	3.36×10^{6}	3.43×10^{9}	544.0
85	1.92×10^{7}	1.96×10^{10}	3,110.0

sulfur. The emission factors for fuel oil combustion are shown in Table 3.3-3. The expected heat load will depend on the amount of steam produced. The steam produced is about 80 percent vapor at 1,500 psig. Expected heat loads for various brine concentrations are given in Table 3.3-5.

Water flooding requires sizeable pumping capacity. The amount of injection water needed for this example is assumed to be 10 gallons per gallon of oil recovered (CH-182). The injection rate for 1,000 bbl/day crude oil production should be about 300 gpm. The injection pressure required is around 1,500 psig. From this data it was determined that the module would require a 440 hp pumping system. The pump was assumed to have a diesel drive which consumes 192 gallons of diesel fuel per day. The emission factors for diesel fuel engines were given in Table 3.1-3.

Miscellaneous Hydrocarbon Emissions

Possible sources of fugitive hydrocarbon emissions are the following:

- wastewater separators,
- pumps,
- compressors,
- relief valves, and
- pipeline valves.

Emission factors for each of these sources were tabulated during a survey of the oil production and refining industry by Monterey-Santa Cruz County, California, and are given in Table 3.3-6 (MS-001). Another source of miscellaneous emissions is flaring. Average oil loss through flaring has been estimated to be 2×10^{-5}

TABLE 3.3-6
MISCELLANEOUS OIL PRODUCTION EMISSION FACTORS[1]

	Hydrocarbon Emissions	
	tons/day*	lb/10^3 bbl
Wastewater Separation	0.2	7.9
Pump Seals	1.9	73.8
Compression Seals	0.1	3.8
Relief Valves	0.2	7.9
Pipeline Valves	0.3	11.6

[1] (MS-001)

* Based on a production rate of 50,000 bbl/day

TABLE 3.3-7
EMISSION FACTORS FOR FLARING AND OIL DISCHARGE
Emissions (lb/bbl of Oil Discharged)

	Flares	Evaporation	Total
Particulate	1	-	1
SO_2	19	-	19
Hydrocarbons	0.1	38	38.1
CO	0.1	-	0.01
NO_x	2.5	-	2.5

bbl/bbl produced (BA-234). The emissions from flaring and oil discharge are given in Table 3.3-7 (BA-234). Crude storage facilities equipped with vapor recovery systems have negligible hydrocarbon emissions.

3.4 Gas Production Module

A module for a typical natural gas production process is presented in this section. A natural gas processing plant is also included in the module.

Module Basis

The gas production module is based on a typical commercial-size operation of 500,000 scfd of gas production. The atmospheric emission values summarized in Table 3.4-1 are based on this production rate.

Module Description

Several processing steps are necessary in the production of pipeline-quality natural gas from a raw wellhead gas. The first step involves extraction of the gas from its underground reservoir. Reservoir pressures vary from field to field and are dependent in part upon the time a reservoir has been producing gas. The gas is extracted from the reservoir through a producing well. From the wellhead, the gas is passed first through knockout stages to remove water and to recover condensates present in the gas stream. These two process steps are located at the well site. A booster compressor is used to move the raw gas to a central treating plant, where the gas is treated to meet sales specifications. Processing at the central plant involves acid gas removal, dehydration, and recovery of LPG and natural gasolines. The H_2S removed from the gas is converted in a Claus plant to elemental sulfur. The cleaned natural gas is then compressed and sent to product pipelines. Figure 3.4-1 shows the processing steps associated with a natural gas production and processing system.

TABLE 3.4-1

SUMMARY OF ATMOSPHERIC EMISSIONS

Gas Production Module

Module Basis: 500,000 scfd natural gas production

Air Emissions, lb/day

Particulates	0.10
SO_2	22.57
NO_x	31.58
HC	136
CO	0.10

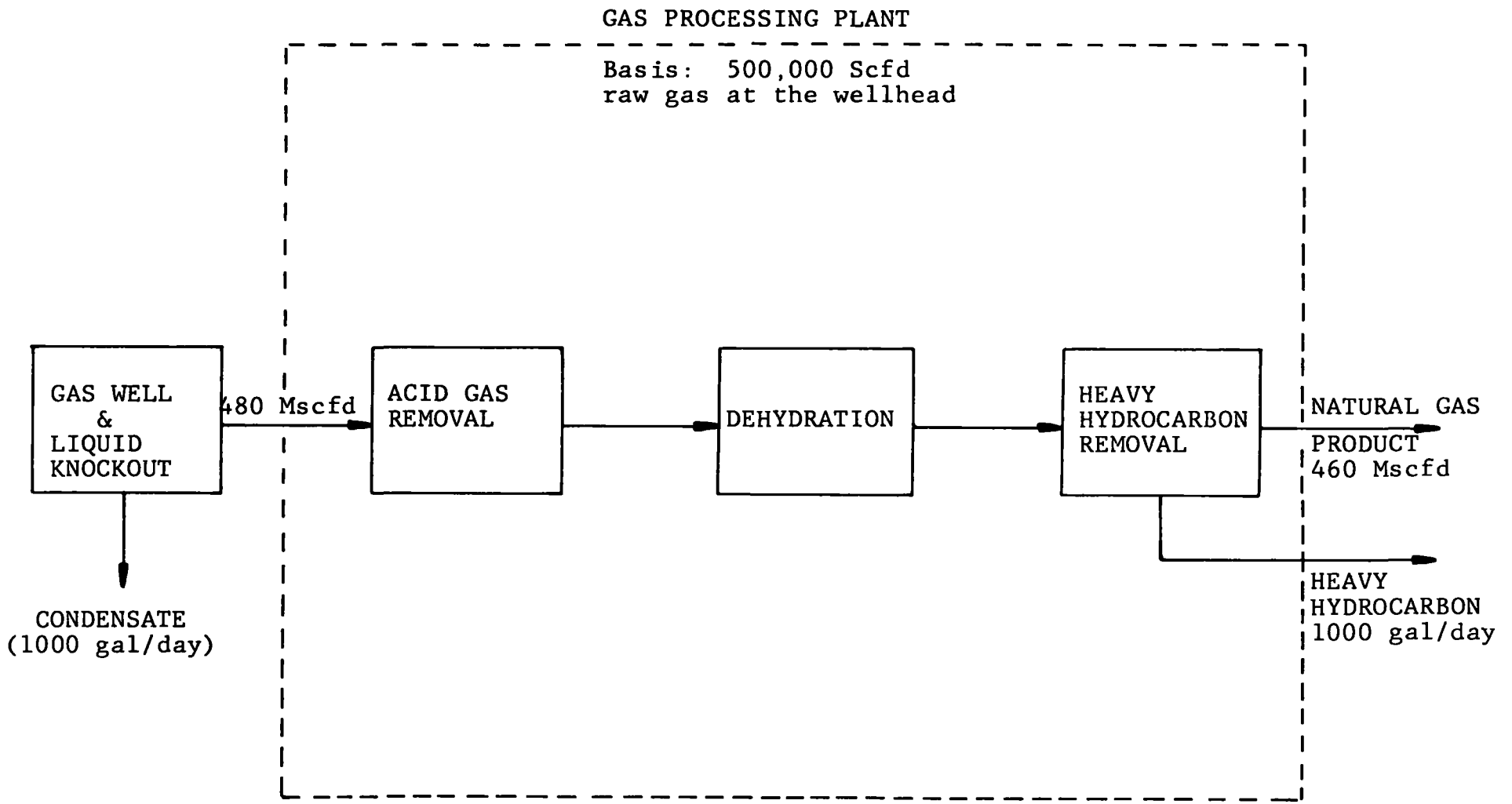
GAS PROCESSING PLANT
Basis: 500,000 Scfd
raw gas at the wellhead
GAS WELL
&
LIQUID
KNOCKOUT
480 Mscfd
ACID GAS
REMOVAL
DEHYDRATION
HEAVY
HYDROCARBON
REMOVAL
NATURAL GAS
PRODUCT
460 Mscfd
CONDENSATE
(1000 gal/day)
HEAVY
HYDROCARBON
1000 gal/day

FIGURE 3.4-1

Often, some heavy hydrocarbons (C_7's and C_8's) will be contained in the produced gas. Heavy hydrocarbon production depends upon the raw gas composition and the on-site processing equipment. The following raw gas composition is assumed for this module:

Methane	- 89.0%	H_2S	- 0.3%
Ethane	- 3.0%	CO_2	- 1.5%
Propane	- 1.0%	N_2, H_2O, O_2, COS, CS_2	- 0.2%
Butanes	- 0.5%		
Pentane	- 0.3%		
Hexane	- 0.2%		
Heptane	- 3.0%		
Octane	- 1.0%		

Based on a gas extraction rate of 500,000 scfd and assuming essentially 100% recovery of the heptanes and octanes, some 1000 gal/day of condensate is recovered in the heavy hydrocarbon recovery stage. This liquid is stored on-site in a 30,000 gallon tank equipped with a vapor recovery system.

The remaining natural gas has the following slightly altered composition:

Methane	- 92.7%	H_2S	- .3%
Ethane	- 3.1%	CO_2	- 1.6%
Propane	- 1.0%	N_2, H_2O, O_2, COS, CS_2	- 0.3%
Butane	- 0.5%		
Pentane	- 0.3%		
Hexane	- 0.2%		

This gas is piped to the processing plant where 70% of the ethane, 95% of the propane, and 99% of the butanes and higher are recovered in a refrigerated absorption unit. The ethane (10,300 cu ft/day), propane (4,500 cu ft/day), and butanes and higher (4,950 cu ft/day) are separated and sent via pipeline to petrochemical plants. Essentially 100% of the natural gasoline (pentanes and hexanes) is recovered and stored in tankage equipped with a vapor recovery system.

Process fuel is the only major utility requirement in the gas production and processing units. At the well site, the major fuel requirements are drivers for the gas compressors moving raw gas to the central gas plant. Estimates on the amount of fuel required for these compressors range from 0.6 percent (CO-129) to 3.2 percent (BA-234) of the gas produced. Using 3.2 percent of the gas as the amount of fuel required, a total of 15,000 cu ft/day of raw natural gas would be burned in a heavy-duty gas engine driving the compressor.

Acid gas removal in the processing plant is accomplished in a Girbitol unit which uses MEA (monoethanolamine) as the absorber liquid. This processing step has a steam requirement of 1.2 pounds of 60 psig steam per pound of acid gas removed. For this module, the amount of acid gas removed to meet pipeline specifications is 130 lbs/day of H_2S and 720 lbs/day of CO_2. Thus, the unit will require 1000 lbs of steam daily. Generation of this steam on-site will require about 0.2 percent of the gas produced in this module.

Utility requirements in the glycol dehydration unit amount to about 0.1% of gas produced to supply process heat.

The refrigerated absorption unit used to remove the heavier hydrocarbons consumes about 0.75 percent of produced gas energy.

Table 3.4-2 summarizes the heat requirements and flow rates for this module.

Module Atmospheric Emissions

Air emission sources for the gas production area include fugitive hydrocarbon losses and combustion products from the booster station. For the gas processing area, atmospheric emissions result from fuel combustion in the glycol dehydration unit, the Girbitol unit, and the refrigerated absorption unit, triethylene glycol from the dehydration unit, SO_2 from the Claus plant, gas flaring, fugitive sulfur dust from sulfur stockpiles, and miscellaneous fugitive hydrocarbon leaks. Table 3.4-3 summarizes these emissions.

Miscellaneous (fugitive) hydrocarbon emissions result from process leaks at pump seals, valve stems, flanges, etc. Estimates of the quantity of these losses have been reported. It has been estimated that 0.22 percent of the gas produced is lost due to leaks at the well site and 0.44 percent escapes as fugitive emissions from the processing plant (BA-234). This amounts to hydrocarbon emissions of 46.5 lbs/day at the well site and 89.3 lbs/day at the processing plant.

The air emissions from the booster compressor driver located at the gas well are estimated using EPA emission factors for heavy-duty gas engines (EN-071). These factors are shown in Table 3.4-4.

The NO_x factor is based on the horsepower requirement of the booster compressor. Figure 3.4-2 gives the NO_x emission rate as a function of compressor horsepower load. The

TABLE 3.4-2

MODULE HEAT REQUIREMENT

GAS PRODUCTION MODULE

Unit	Heat Requirement (m Btu/mscf)	Natural Gas Flow Rate (m scfd)	Unit Heat Requirement (Btu/day)
Well Site Compressor	32.0	480	1.5×10^7
Girbitol Unit	2.1	480	1.0×10^6
Glycol Dehydration Unit	1.0	480	4.8×10^5
Refrigerated Absorption Unit	7.3	470	3.5×10^6
			1.99×10^7 Btu/day

TABLE 3.4-3

MODULE EMISSIONS

GAS PRODUCTION AND PROCESSING MODULE

Process Atmospheric Emissions (lb/day)

Pollutant	Gas Well Compressor	Acid Gas Removal Unit	Glycol Dehydration	Refrigerated Absorption	Flare
Particulates	Neg.	0.018	0.009	0.063	0.010
SO_2	7.68	0.0006	0.0003	0.002	14.784
NO_x	31.20	0.120	0.058	0.042	0.062
HC	0.02	0.003	0.001	0.010	0.004
CO	Neg.	0.017	0.008	0.060	0.011
Triethylene Glycol	-	-	0.480	-	-

1. Emission factor modified to include higher sulfur content present in the fuel gas.

2. Emission factor modified to include sulfur coming from Claus plant tail gas.

TABLE 3.4-4

EMISSION FACTORS[1] FOR GAS PRODUCTION MODULE

Emissions: lb/million scf of natural gas burned

Pollutant	Gas Well Compressor	Glycol, Girbitol and Absorption Units	Plant Flare
Particulates	Neg.	18	19
SO_2	510[2]	0.6	28,000[3]
NO_x	- [4]	120	120
HC	1.2	3	8
CO	Neg.	17	20

1. Source: EN-071
2. Based on sulfur content in fuel gas of 0.30 vol. percent.
3. Based on known amount of H_2S entering flare from Claus unit.
4. See Figure 3.4-2.

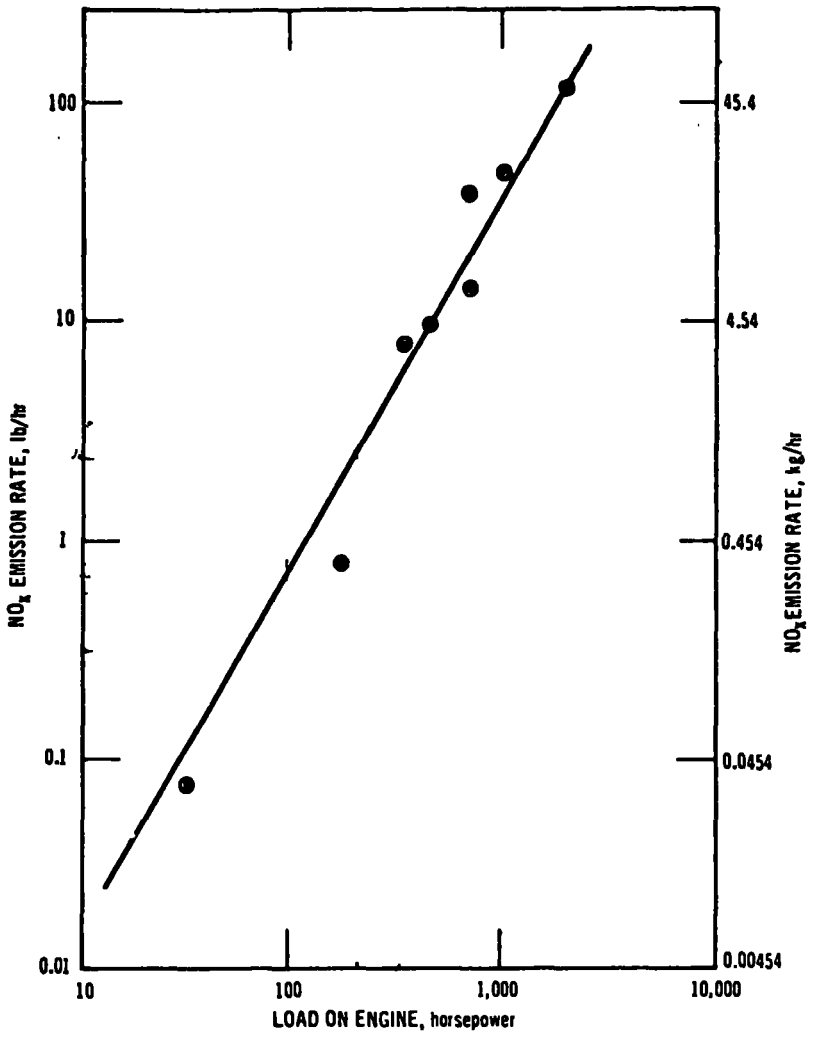

FIGURE 3.4-2 NITROGEN OXIDES EMISSIONS FROM STATIONARY INTERNAL COMBUSTION ENGINES

SOURCE: (EN-071)

power requirements depend upon pipe lengths and pressure differences in the gathering system. A load of 125 horsepower is assumed for assessment purposes in this module.

Emissions from the combustion of natural gas for the glycol unit, Girbitol unit, and refrigerated absorption unit were estimated using EPA emission factors for small industrial boilers (EN-071). These factors are also shown in Table 3.4-4.

The amount of triethylene glycol emitted to the atmosphere from the dehydration unit is reported to be 0.1 gallons per million cubic feet of gas processed (PR-052).

Sulfur stockpiles recovered from the Claus plant are a potential source of air pollution at gas processing plants. Potential dust emissions can be significantly reduced by pouring the sulfur into huge blocks for storage. An alternative method of stockpiling involves forming small pellets or chunks of sulfur and allowing these to harden separately. These techniques can reduce emissions expected for the solid mound method of stockpiling by as much as 70% (TR-024).

Flaring of natural gas at processing plants releases some atmospheric pollutants. Flare losses estimated to be 0.11 percent of the gas processed have been reported (PR-075). Emission factors for domestic and commercial heating units are used (EN-071). It is also assumed that the tail gas from the Claus sulfur plant is sent to the flare.

3.5 Transportation Modules

This section contains atmospheric emissions data from specific representative energy transportation facilities. The energy resources considered are coal, crude oil, and natural gas.

3.5.1 Coal Transportation Modules

Three forms of transportation are considered for the movement of coal. The following sections deal with atmospheric emissions from rail, barge, and slurry pipeline facilities used in coal transportation.

Coal Rail Transport Module

The tonnage of coal transported over the railways amounts to approximately 72 percent of the nation's annual coal shipments. Over half of the coal is transported by means of unit trains. These are rail facilities dedicated exclusively to coal transport. This module is based on the unit train concept.

Module Basis

This module is based on the operation of a 126 car unit train which supplies 12,600 tons of coal per trip to a power plant. The round trip covers 612 miles in a 48 hour period. A summary of the atmospheric emissions from this module is given in Table 3.5-1.

TABLE 3.5-1

SUMMARY OF ATMOSPHERIC EMISSIONS

Rail Transport of Coal Module

Basis: 12,600 Tons of Coal Transported Per Trip

Pollutant	Air Emissions lbs/day
Particulates, in transit	380
SO_2	860
NO_x	5,350
HC	2,480
CO	1,030
Particulates, during unloading	5,040 lbs/trip

Module Description

Coal is loaded on the unit train at the mine site. After loading is completed, the cars are switched to nine 3,000-horsepower diesel locomotives for transportation to the power plant stockpile 306 miles away. These locomotives are of the 2-stroke supercharged road variety which are most often used for this type operation. Upon arrival at the destination, the coal is unloaded from the cars through bottom gates.

After the unloading operations are completed, the train returns over the same track to the mine for another load. The total elapsed time from leaving the mine full to returning empty is 48 hours (EN-071).

Module Atmospheric Emissions

The atmospheric emissions associated with transporting coal result from the diesel fuel burned by the locomotives and the dust lost in transit and during loading and unloading of the coal. The diesel emissions are estimated by using work output and fuel-based emission factors (EN-071). These factors are shown in Tables 3.5-2 and 3.5-3.

The work output of the unit train is calculated from the equation:

$$w = l \times p \times h$$

TABLE 3.5-2

WORK OUT-PUT - BASED LOCOMOTIVE EMISSION FACTORS (EN-071)

Pollutant	Emission Factor (grams/hp-hr)
CO	1.8
HC	4.0
NO_x	9.4

TABLE 3.5-3

FUEL - BASED LOCOMOTIVE EMISSION FACTORS (EN-071)

Pollutant	Emission Factor (lb/10^3 gallons)
Particulates	25
SO_2	57
Aldehydes	5.5
Organic Acids	7

(1) Based on a sulfur content of 0.4 percent in the diesel fuel (EN-071).

where:

w = work output (horsepower hours)
l = load factor (average power produced during operation divided by available power)
p = available horsepower
h = hours of usage at load factor (l).

Using the average load factor of 0.4, the work output for the 612 mile round trip is 518,400 hp-hrs. The emissions calculated from the work-output based factors are:

Pollutant	Emissions (lb/round trip)
CO	2,060
HC	4,570
NO_x	10,700

Since the work-output emission factors do not include the other four pollutants (particulates, SO_2, aldehydes, and organic acids) emitted from diesel trains, the fuel-based emission factors are used to estimate these emissions. For an average load factor of 0.4, the fuel consumption for a 3,000 hp locomotive is 70 gallons/hr (WH-036).

The total fuel required for the nine locomotives on the round trip is 30,200 gallons of diesel fuel. The resulting estimated emissions are:

Pollutant	Emissions lbs/round trip
Particulates	760
SO_2	1,720
Aldehydes	170
Organic Acids	210

Aldehydes and organic acid emissions are considered as part of the total hydrocarbons group.

Besides emissions from diesel combustion, the other potential source of air emissions within this module is the discharge of coal dust particulates in transit, and during loading and unloading operations. Reported emission factors for unloading operations were based on similar operations at a metallurgical coke manufacturing plant (EN-071). The particulate emission factor is 0.4 lbs per ton of coal unloaded.

Estimates on the atmospheric discharge of particulates from loading or in transit were not available. A negative pressure hood vented into a bagfilter is assumed to be used at the loading facility. The hood, located just above the loadout chute, is assumed to reduce emissions to a negligible amount. Once the coal is loaded into the unit cars it is coated with a chemical spray. While the extent of its application to coal trains is unknown, the spray is designed to eliminate windage losses of fines in the transport of the coal.

The unloading losses amount to 5,040 pounds. Since this atmospheric emission is not a function of the distance traveled or elapsed time, it is presented in Table 3.5-1 separately.

Coal Barge Transport Module

Coal barges accounted for some 27% of long-distance coal movements in the United States in 1973. The usual manner of hauling is by a diesel-powered tug powering a number of barges. A typical system is described in the following paragraphs.

Module Basis

This module is based on barge transportation of 20,000 tons of coal. This amount represents an average shipping haul for coal transported on inland waterways via barge. Table 3.5-4 summarizes the atmospheric emissions from this module.

This module is not based on a round trip since the towboats used are not generally owned by the company using the coal and so are not bound to a set schedule such as the unit train.

Module Descriptions

The coal is loaded on barges at a loading site along the river. Ten barges are required for 20,000 tons of coal. Once the barges are loaded and lashed together, a towboat with a 6,000 hp diesel fired power plant delivers the coal to its destination.

The average speed of the tugboat and barge system is 6 mph. The tug travels an average of 144 miles per day. Upon arrival at the destination, the tug maneuvers the barges to dock and returns to the coal shipping port with a load of empty barges.

Module Atmospheric Emissions

The only air emissions from this module result from the combustion of diesel fuel in the towboats. The American Waterways Operators (AM-115) estimate the energy requirement for inland barge freight to be 500 Btu per ton mile. Thus, the average daily fuel consumption for a towboat burning 138,000 Btu/gal. diesel fuel is 10,400 gallons per day.

TABLE 3.5-4

SUMMARY OF ATMOSPHERIC EMISSIONS

Barge Transport of Coal Module

Basis: 20,000 tons of coal

	Air Emissions lbs/day
Particulates	135
SO_2 (1)	280
NO_x	3,850
HC	447
CO	2,340

(1) Based on a diesel fuel sulfur content of 0.2 wt percent.

SOURCE: (EN-071)

By using the emission factors for heavy-duty diesel-powered vehicles, air emissions from this module are determined (EN-071). These emission factors are shown in Table 3.5-5.

Coal Slurry Pipeline Transport

Currently, only one coal-slurry pipeline is operating in the United States (CO-244). It is owned by the Southern Pacific Railroad. The pipeline runs 273 miles from Peabody Coal Company's Kayenta mine in Arizona to Southern California Edison's Mohave power plant near Las Vegas. The 18-inch line can handle 5 million tons of coal per year and provides fuel for 1,200 Mw of power generation.

Pipeline pump stations are located 60 to 100 miles apart. The Mohave line has electrically powered pump stations. It is anticipated that future coal-slurry pipelines will also be powered by electrical pump stations. No air emissions are directly attributed to the transfer of coal by slurry pipeline; however, greater emissions do occur at the end-use facility during and after drying because of fines produced during the slurry transfer.

TABLE 3.5-5

EMISSION FACTORS FOR HEAVY-DUTY, DIESEL POWERED VEHICLES

Pollutant	Emission Factor $lb/10^3$ gal Diesel Fuel
Particulates	13
SO_2 (1)	27
NO_x	370
HC (2)	43
CO	225

(1) Based on a diesel fuel sulfur content of 0.2 wt percent (EN-071).

(2) Emission factor includes aldehydes and organic acids.

3.5.2 Oil Transportation Modules

The following sub-sections contain discussions on emissions from crude oil transportation by pipeline, tanker and rail.

Oil Pipeline Transport Module

Pipelines are the most important present method of crude oil movement in terms of volume moved, accounting for some 77 percent. A typical trunkline system for movement of crude to refineries is described in this section.

Module Basis

The basis for this module is a 48-inch pipeline which transports 1,000 barrels per minute of crude oil. Atmospheric emissions resulting from the transportation of this crude via pipeline are presented in Table 3.5-6.

Module Description

In the petroleum industry, three basic types of pipeline systems are used: the gathering pipeline system, the trunkline system, and the distribution system. The gathering pipeline system transports crude oil from individual oil wells and other production units to a main location. The trunkline system transports crude oil from a main location to a processing facility or refinery. The distribution system transports the refinery products to process plants, power plants, and to other forms of transportation such as tankers or barges. Of these pipeline systems, the trunkline system is of interest in this study.

TABLE 3.5-6

SUMMARY OF ATMOSPHERIC EMISSIONS

Crude Oil Pipeline Transportation Module

Basis: 1,000 Bbl/minute of crude oil

	Air Emissions lb/day
Particulates	984
SO_2 (1)	2,040
NO_x	28,000
HC (2)	3,250
CO	17,000

(1) Based on sulfur content in fuel of 0.2%(EN-071).

(2) The total hydrocarbon emissions include aldehydes and organic acids.

A crude pipeline system consists of pipes and pump stations. For this module, a 48-inch pipe is chosen and the throughput is determined using nominal, generalized economic flow rate correlations. The pipeline spans a 200-mile distance and requires two pump stations, one at the beginning of the pipeline and one at the halfway point. These stations are powered by large internal combustion diesel engines. The engines require one gallon of diesel for 500 cargo ton-miles of oil transported (RI-063).

Module Atmospheric Emissions

The air emissions resulting from the transmission of oil by pipeline occur from the diesel fuel combusted in the booster stations. For a 48-inch pipeline transporting 42,000 gallons per minute of oil over a 200-mile distance, the fuel requirement to the booster stations is 75,700 gallons per day.

The air emissions are calculated using EPA emission factors for heavy-duty, diesel-powered vehicles. These emission factors are given in Table 3.5-5.

Oil Tanker Transport Module

About 22 percent of the crude deliveries to oil refineries was moved by water transportation in 1970. That fraction is tending to increase. A typical water transportation system for crude oil is described in this section.

Module Basis

The module is based on a crude oil tanker with a capacity of 825,000 barrels of oil. The tanker is assumed to

deliver its cargo to one point where the oil is removed entirely. Atmospheric emissions from the tanker while "in-transit" and "in-berth" are summarized in Tables 3.5-7 and 3.5-8.

Module Description

Oil tankers are large vessels especially constructed to carry petroleum products in bulk. The oil is pumped aboard by shore pumps through pipelines connected to the internal piping of the tanker and is stored in the cargo holds, separated by bulkheads into a series of tanks. The crude oil is discharged by the reverse process with the ship's pumps furnishing the power to move the oil through pipelines into storage tanks ashore. Pumps and lines are sized to keep loading and unloading times to a minimum.

For this module, a tanker with an 825,000 barrel capacity is used to transport oil from the Middle East to North America over a 12,000 mile distance. The ship's average speed is 20 mph. It is powered by an oil-fired boiler which generates steam for the steam turbines. The tanker loads and unloads at a rate of 40,000 bbl/hr.

Module Atmospheric Emissions

Air emissions from the tanker are the result of hydrocarbon evaporation from the storage tanks and combustion products from the oil used as fuel.

The following factors are used in estimating hydrocarbon losses while in-transit and from loading and unloading of the tanker (EN-071).

TABLE 3.5-7

SUMMARY OF ATMOSPHERIC EMISSIONS

Crude Oil Tanker While In-Transit

Basis: 825,000 bbl of crude oil/trip

	Air Emissions lb/day
Particulates	190
SO_2	1,700 (1)
NO_x	2,200
HC	15,400 (2)
CO	Neg

(1) Assuming fuel oil sulfur content of 0.5% (EN-071).

(2) The total hydrocarbon emissions include the aldehydes emitted.

TABLE 3.5-8

SUMMARY OF ATMOSPHERIC EMISSIONS

Crude Oil Tanker While In-Berth

Basis: 825,000 bbl of crude oil

	Air Emissions lb/day
Particulates	15
SO_2	152[1]
NO_x	200
HC (loading berth)	90,100[2]
HC (unloading berth)	80,000[2]
CO	Neg.

(1) Assuming fuel oil sulfur content of 0.5% (EN-071).

(2) The total hydrocarbon emissions include the aldehydes emitted.

- loading loss, 2.6 lbs hydrocarbon per 1000 gallons transferred,

- unloading loss, 2.3 lbs hydrocarbon per 1000 gallons,

- transit loss 3.1 lbs per 1000 gallons of oil per week

Those emissions resulting from the oil burned in the boilers are (EN-071):

	Emission Factors	
Pollutant	In-Transit lb/mile	In-Berth lb/day
Particulate	0.4	15
SO_2 (1)	7S	300S
SO_3 (1)	0.1S	4S
CO	0.002	0.08
HC	0.20	9
NO_x	4.6	200
Aldehydes	0.04	2

(1) S = weight percent sulfur in the fuel; assumed to be 0.5 percent for diesel fuel (EN-071).

Emissions for the tanker while in-transit are calculated knowing the 12,000 mile distance that the tanker travels. Approximately 25 days are required for the tanker to cover this distance. The loading and unloading rate for the crude oil to and from the tanker is 40,000 bbl/hr. Therefore, the tanker is at a terminal for approximately 21 hours for loading and 21 hours for unloading.

Oil Rail Transport Module

Less than one percent of the crude oil movement in the United States is by rail. This is due primarily to the higher transportation cost of railway versus pipeline transport. The following sections investigate the atmospheric emissions expected from a typical size movement of crude oil by rail.

Module Basis

The module is based upon a train transporting 1,000,000 gallons of crude oil on a 24-hour trip, one way, as a typical transportation mode for crude oil by rail. The atmospheric emissions resulting from this module are summarized in Table 3.5-9.

Module Description

At a crude oil terminal, the tank cars are loaded for shipment to a refinery. The oil is loaded through the top of the cars and free-falls into the tank compartment. After loading the 50 cars with 20,000 gallons of crude oil each, they are switched over to road-haul locomotives for the trip. Three 3,000 horsepower 2-stroke super charged road locomotives are needed to power the train assuming 1.5 horsepower per trailing ton is required (GE-050).

After the 24-hour trip, the cars are uncoupled from the locomotives at the refinery and unloaded. Since neither the locomotives nor the cars are generally owned by the oil company, and thus do not follow a set schedule of transporting oil, one-way only trips are considered in this module.

TABLE 3.5-9

SUMMARY OF ATMOSPHERIC EMISSIONS

CRUDE OIL RAIL TRANSPORTATION MODULE

Basis: 1,000,000 gallons of oil (one-way trip for locomotives)

	Air Emissions lb/day
Particulates	230
SO_2	530
NO_x	3,670
CO	700
Hydrocarbons (from locomotives)[1]	1,680
Hydrocarbons (from loading operations)	10,600 lbs/trip
Hydrocarbons (from unloading operations)	2,000 lbs/trip

---

(1) Total hydrocarbon emission from the locomotives include aldehydes and organic acids.

Module Atmospheric Emissions

Atmospheric emissions resulting from the transportation of crude oil by rail are hydrocarbon evaporation losses and combustion products from diesel fuel combustion.

Estimates for the amount of hydrocarbons lost during loading and unloading operations have been reported (EN-071). Transit hydrocarbon emissions are considered negligible for any trip shorter than two days (EN-071). The emission factor for top loading of the oil into the tank car compartment is 10.6 lbs of hydrocarbons per 1000 gallons transferred. The unloading losses are 2.0 lbs per 1000 gallons transferred. Since these losses are independent of the length of time of a trip, they are presented separately in the summary of the module's emissions.

There are also emissions from the three locomotives powering the train. These emissions are estimated using emission factors shown in Tables 3.5-2 and 3.5-3 (EN-071).

The total locomotive horsepower output is 177,000 hp-hours. The diesel fuel consumption rate is 130 gallons per hour for one locomotive operating at a load factor of 0.82 (WH-036). The total fuel consumed for a 24 hour period is 9,360 gallons.

3.5.3 Gas Transportation Module

Pipeline movement is the only method used to move natural gas to major markets and to local distribution facilities. A typical large gas transmission pipeline facility is described in this section.

Module Basis

This module is based on a 30-inch diameter pipeline with a gas throughput of 80.2 MM scfd. A summary of atmospheric emissions from the pipeline transportation of gas is presented in Table 3.5-10.

Module Description

Current gas pipelines range from 24- to 42-inch diameter systems (ST-204, VA-093). This module deals with the air emissions associated with natural gas transmission in a 30-inch diameter system. Emissions are primarily from gas engines used to power the compressors in the booster stations. The stations are located 50 miles apart.

Module Atmospheric Emissions

The EPA emission factor book (EN-071) estimates the only significant pollutant from booster compressor-dirven engines is NO_x. NO_x is released at a rate of 7,300 lbs per million scf of natural gas combusted. For a typical gas pipeline, an average of 3.3% of the gas transported is combusted to drive the gas line booster compressors. Some fugitive hydrocarbons may potentially be emitted from any leaks around flanges, compressor seals, and valve stems if poor maintenance practices are observed; however, these emissions are considered to be negligible for this module.

TABLE 3.5-10

SUMMARY OF ATMOSPHERIC EMISSIONS

Natural Gas Pipeline Transportation Module

Basis: 80.2 MM scfd transported

	Air Emissions lb/day
Particulates	Neg.
SO_2	Neg.
NO_x	19,320
HC	Neg.
CO	Neg.

3.6 Comparison of Module Emissions

In the previous subsections the emission rates are related to the specific module charge capacity. This approach is used to present, in a convenient manner, the emission impact of plant sizes typical of each industry and hence to facilitate the environmental assessment of each.

In this subsection all of the modules are adjusted to a 10^{12} Btu/day output of primary product. This is done in order to present the different module emissions on a common basis and to provide a useful comparison of the emission impact of the various technologies.

The comparison of emissions from extraction modules is presented in Table 3.6-1. The large CO emissions associated with oil well production come primarily from diesel-powered equipment used in water flooding. Gas production operations have substantial NO_x emissions from gas compressors. Large hydrocarbon fugitive emissions are also reported at gas production facilities (BA-234).

Two sets of emissions from coal strip mining compared emissions with and without physical coal cleaning operations. The added impact of burning refuse piles is shown in the room and pillar coal mining data. The large hydrocarbon emissions associated with room and pillar mining are based on an assumed methane production rate during the mining operation of 200 cubic ft per ton of coal mined (DE-148). Emissions from the in-situ coal production module are based on fugitive fuel gas losses at the producing well site.

The emissions from surface mining of the oil shale are mainly due to fugitive losses and diesel fuel combustion. The room and pillar oil shale module has essentially the same type emissions. Because of thermal drying operations used in the coal production module, it is difficult to compare the room and pillar mining operations for coal and oil shale.

Transportation modules are compared in Table 3.6-2. No atmospheric emissions are directly attributed to coal transportation by slurry pipeline; however, considerable emissions may occur at the end-use drying facility because of fines produced in the pipeline. Hydrocarbon emissions associated with rail transportation of oil are primarily fugitive losses during loading and unloading. The differences involved with the sets of emissions for oil tanker in-transit and in-berth operations are the result of larger power requirements in-transit (diesel fuel combustion), but fugitive hydrocarbon losses are greater in-berth. NO_x emissions associated with pipeline transportation of gas are from gas compressors.

TABLE 3.6-1

COMPARISON OF EMISSIONS FROM EXTRACTION MODULES

Basis: 10^{12} Btu/Day Fuel Output

Air Emissions, lb/day

Pollutant	Coal Mining: Strip [1]		Coal Mining: Room and Pillar [2]		Coal Mining: In-Situ [3]	Oil Shale Mining: Surface [4]	Oil Shale Mining: Room and Pillar [5]	Oil Shale Mining: In-Situ [6]	Oil Well Production [7]	Gas Well Production [8]
Particulates	11,900	(15,200)	6,190	(84,000)	5,500	65,200	13,100	107,000	1,130	200
SO_2	273	(8,730)	8,530	(125,000)	NA	1,680	39.3	239,000	12,910	44,900
CO	2,290	(2,610)	562	(233,000)	30,000	14,100	335	414,000	8,290	200
NO_x	3,740	(7,870)	4,560	(42,900)	NA	23,100	550	12,400	20,400	63,000
Hydrocarbons	432	(568)	352,000	(391,000)	65,000	2,620	64.2	48,000	21,300	273,000

[1] Adjusted from 6,300 TPD run-of-mine coal (12,000 Btu/lb). Emissions in parentheses include emissions from physical coal cleaning.
[2] Adjusted from 6,300 TPD run-of-mine coal (12,000 Btu/lb). Mining emission values include emissions from physical coal cleaning. Emissions in parentheses include emissions from burning refuse piles.
[3] Adjusted from 10^9 Btu/day fuel gas produced. Data on SO_x and NO_x emissions were not available.
[4] Adjusted from 50,000 bbl/day of upgraded shale oil capacity (5.6×10^6 Btu/bbl).
[5] Adjusted from 50,000 bbl/day of upgraded shale oil capacity (5.6×10^6 Btu/bbl).
[6] Adjusted from 50,000 bbl/day of upgraded shale oil capacity (5.6×10^6 Btu/bbl).
[7] Values adjusted from module producing 1,000 BPD crude oil (5.6×10^6 Btu/bbl), assuming use of water flooding, heater treater, and 50% brine content.
[8] Values adjusted from production of 5.0×10^5 SCFD gas (1000 Btu/SCF).

TABLE 3.6-2

COMPARISON OF EMISSIONS FROM TRANSPORTATION MODULES

Basis: 10^{12}Btu/Day Fuel Output

	Air Emissions, lb/day								
	Coal Transportation				Tanker Transportation of Oil [5]				
Pollutant	Rail [1]	Barge [2]	Slurry Pipeline [3]	Rail Transportation of Oil [4]	In-Transit	Loading	Unloading	Pipeline Transportation of Oil [6]	Pipeline Transportation of Gas [7]
Particulates	1,260	281	Negligible	1,730	40	3	3	122	Negligible
SO_x	2,840	583	Negligible	3,980	370	30	30	253	Negligible
CO	3,410	4,880	Negligible	5,250	Neg.	Neg.	Neg.	2,110	Negligible
NO_x	17,700	8,020	Negligible	27,500	480	40	40	3,470	241,000
Hydrocarbons	8,200	931	Negligible	107,000	3,300	18,000	16,000	403	Negligible

[1] Adjusted from 12,600 tons of coal transported (12,000 Btu/lb).
[2] Adjusted from 20,000 TPD coal transported (12,000 Btu/lb).
[3] A slurry pipeline powered by electrically driven pump stations should have negligible atmospheric emissions directly associated with the pipeline.
[4] Adjusted from 10^6gal/day oil transported (5.6 x 10^6 Btu/bbl).
[5] Adjusted from transportation of 825,000 BPD oil (5.6 x 10^6Btu/bbl)
[6] Adjusted from transportation of 42,000 gpm oil (5.6 x 10^6Btu/bbl).
[7] Adjusted from transportation of 80.2 MMSCFD pipeline gas (1000 Btu/SCF).

4.0 MONITORING TECHNOLOGY

Monitoring is normally classified as either source or ambient. Source monitoring typically involves measuring both the concentration and flow rate in an exit stream to determine the total amount of a particular species emitted. Ambient monitoring generally involves measurement of the concentration of a species at a remote point where it has been diluted by mixing.

Monitoring may be either continuous or intermittent. Ambient monitoring is generally performed on a continuous basis since the regulations are written in terms of the maximum allowable average concentration over a particular time interval and since the dilution of a species depends on mixing conditions which are difficult to predict with any certainty. Without continuous monitoring, there is little assurance that the maximum levels actually are detected.

In source monitoring, the concentrations do not vary so widely or so rapidly, and maximums may sometimes be predicted as a consequence of changes in operating parameters (such as fuels). Regulations often are expressed in terms of allowable emissions as a function of weight or heat content of the feedstock. Because of this, source monitoring has tended to be of the intermittent type in the past, although continuous source monitoring is now required for some pollutant species in some industries.

Whether ambient or source, monitoring methods can be divided into several categories. These include manual laboratory methods, automated laboratory methods, manual field methods, and automated field methods.

The impetus for monitoring is normally provided through a requirement to demonstrate compliance with Federal and/or state regulations. For many species these regulations include both source and ambient limits.

Most regulations designate a particular analysis procedure as the standard or "reference" method for a given species. These reference procedures have tended to be of the manual laboratory type since this type of analysis has historically provided the greatest confidence level in the results. This is probably because the basic standards in this type work are normally chemicals of reliable purity whereas the standards used in manual or automatic field methods are often derived from a reference gas which may be questionable because its concentration is dependent on certain temperatures or flow rates in a calibration unit. Field methods do have the advantage that they provide real time analysis whereas laboratory methods require the collection of a sample which must then be stabilized or preserved in some manner to keep it from changing in composition during transport to the laboratory.

The emissions from the various modules associated with production, processing, and transportation of coal, oil, and gas have all been described in earlier sections. These were described largely in terms of the criteria pollutants plus a few species such as aldehydes and organic acids.

Both ambient and source monitoring methods are discussed in this section. A brief review of the Federal regulatory framework will be provided where applicable.

4.1 Ambient Air Quality Monitoring

4.1.1 Background

For ambient air quality, Federal regulations have established certain criteria pollutants, namely, nitrogen dioxide (NO_2), sulfur dioxide (SO_2), carbon monoxide (CO), photochemical oxidants (O_3), particulates, and non-methane hydrocarbons (NMHC). Both primary standards (to safeguard human health) and secondary standards (to prevent damage to clothes, buildings, plants, animals, etc.) have been established. The averaging time varies for different species, with short term averages generally expressed as "not to be exceeded more than once per year". The actual regulations are quite lengthy, and are described in the Federal Register, Volume 36, No. 228, page 22384 and later modified slightly in Federal Register, Volume 38, No. 178, page 25678. A summary is provided in Table 4.1-1. It should be noted that all measurements are to be corrected to reference conditions of 25°C and 760 mm Hg.

The various states have established their own ambient air quality regulations, and in many cases they have different averaging periods and/or more stringent limits than Federal regulations. Due to their wide variety these will not be considered here, but it is noteworthy that many include regulations on hydrogen sulfide (H_2S).

In addition to specifying limits on the criteria pollutants, the Federal government has also established reference methods for their analysis. These procedures for particulates, total oxidants, nitrogen dioxide, and sulfur dioxide are outlined in Federal Register, Volume 36, No. 84, Part II, April 30, 1971. For non-methane hydrocarbons, the procedure is defined in Federal

TABLE 4.1-1

SUMMARY OF AMBIENT AIR STANDARDS

All numbers in micrograms/cubic meter ($\mu g/m^3$)

Pollutant	Averaging Time	Primary Standard	Secondary Standard
SO_2	Annual	80	-
	24 hour*	365	-
	3 hour*	-	1,300
Particulate	Annual	75	60
	24 hour*	260	150
CO	8 hour*	10,000	10,000
	1 hour*	40,000	40,000
Total Oxidant	1 hour*	160	160
Non-Methane HC (6-9 AM)	3 hour*	160	160
NO_2	Annual	100	100

*Not to be exceeded more than once per year.

Register, Volume 36, No. 228, page 22394. Because some of these procedures are inconvenient for continuous field monitoring, and because many other types of analyzers are presently being used for field monitoring, certain mechanisms have been defined whereby other analysis procedures may be designated as reference or equivalent methods. These mechanisms are outlined in Federal Register, Volume 40, No. 33, page 7042, 1975. Because many types of instruments are currently under evaluation as reference or equivalent methods, it is not possible at this time to specify which monitoring methods will be acceptable.

4.1.2 General Monitoring Considerations

One of the most difficult areas in ambient air monitoring is the siting of the various monitors. This is especially true when the purpose of the monitoring is to evaluate the impact of a particular source. This is typically done based on dispersion modeling which utilizes historical meteorological data plus data regarding the source to predict the location of maximum pollutant concentrations for annual and short term averages. The Environmental Protection Agency has recently undertaken several studies on optimum siting criteria for several pollutants.

For the reference procedures defined in the Federal Register, the accuracy of the analysis is given, and it is expected that any new reference or equivalent methods will be of equal or greater accuracy. For SO_2 analysis by the reference method, the relative standard deviation at the 95 percent confidence level is 4.6 percent. For total oxidants the accuracy is given as ±7 percent. For carbon monoxide an accuracy of ±1 percent of full scale is given (full scale normally is 58 milligrams per cubic meter). The accuracy of particulate analysis

is given as ±50 percent, and for non-methane hydrocarbons the accuracy is 2 percent of full scale.

Costs are difficult to assess on a per sample basis for continuous analysis. Instrument costs are in the following ranges; however, multicomponent analyzers may be even higher.

Pollutant	Thousands of Dollars
SO_2	4-8
NO_2	4-8
Ozone	3-5
NMHC	5-10
CO	3-10
Particulates	0.5-15

In some cases a calibration unit costing several thousand dollars may be required to accomplish a multi-point calibration. In addition, some type of temperature-controlled shelter is required, as is a data recording system. Finally, processing the data will require manpower and/or additional hardware. It can be seen that actual monitoring costs will depend on availability of facilities and manpower, and will be different in almost every case. Many companies now offer an ambient air monitoring service in which they assume total responsibility for all instrument operation and data processing, and provide a summary report to the client on a regular basis.

The most commonly used nitrogen oxide monitors employ the chemiluminescent technique. This method is specific for nitric oxide, so nitrogen dioxide must be converted to nitric oxide prior to its analysis. By obtaining a nitric oxide measurement with and without conversion of nitrogen dioxide, the nitrogen dioxide concentration can be obtained by difference. Other

popular methods for measuring nitrogen oxides include electrochemical analyzers, second derivative spectroscopy, bubblers and colorimetric analyzers, and membrane-electrochemical analyzers (IN-056).

Sulfur dioxide and hydrogen sulfide are most commonly measured with flame photometric analyzers. These detectors actually respond to the total sulfur content of a molecule; therefore, selectivity scrubbers are installed on the inlet to remove all sulfur species but the one of interest. Other analysis methods for SO_2 include electrochemical analyzers (membrane and non-membrane), pulsed fluorescent analyzers, second derivative spectroscopy analyzers, and colorimetry (IN-056). Both SO_2 and H_2S can be measured with gas chromatographic analyzers using flame photometric detectors. Other sulfur species such as COS, CS_2 and CSH compounds can also be measured by this technique.

The most commonly used method for continuous ozone analysis is the chemiluminescent technique, in which ozone is reacted with ethylene or in some cases with Rhodamine-B. Other methods include ultraviolet absorption, electrochemical analyzers, second derivative spectroscopic analyzers, and wet chemistry bubblers.

Carbon monoxide is normally measured with either infrared analyzers or gas chromatographs which convert the CO to CH_4 and measure it via a flame ionization detector. Electrochemical analyzers for CO also are available.

Hydrocarbons are most commonly measured using chromatographic separation of the methane, detection via a flame ionization detector, and determination of non-methane hydrocarbons as the difference between total hydrocarbons and methane (IN-056).

Continuous analyzers are now available which separate the hydrocarbons into methane, ethylene, acetylene, and total hydrocarbons. To obtain a more detailed analysis, a manually operated gas chromatographic system or gas chromatograph - mass spectroscopy combination is required. This may be achieved by collecting bag samples and taking them to the laboratory or by installing an instrument in a field site. Continuous analysis of this sort is difficult since some concentration of the sample is normally required.

Aldehydes and organic acids are detected by the flame ionization detectors in regular environmental chromatographs. In the results, however, they are lumped into the non-methane hydrocarbons. These species can be detected using bag samples and laboratory chromatographs or with pulse polarographs.

Particulates are most commonly determined using the EPA High Volume sampler. A weighed filter is exposed to a measured flow of air for 24 hours, then reweighed. Average particulate mass per unit volume for the 24 hour period is obtained. Other samplers based on mass measurement using beta particles have become available in recent years. These systems can be programmed to measure for much shorter time periods than 24 hours.

Samples collected with particulate analyzers can be subjected to a detailed analysis for content of various trace elements. The most popular methods for trace element analysis are x-ray fluorescence, atomic absorption, spark source mass spectrometry, and neutron activation analysis; however, these are typically performed in a laboratory and not under real time, continuous conditions.

4.2 Source Monitoring for Air

4.2.1 Background

Federal regulations for source emissions have been established on an industry by industry basis, and generally are for new or modified sources only. Many states also have established emission regulations for various industries; however, the variety of these is too great and changes too rapid to be covered in this discussion.

New Source Performance Standards have been proposed for coal preparation plants (Federal Register, Volume 39, No. 207, page 37922, 1974). It should be emphasized that these are proposed rules and not promulgated standards. These rules apply to thermal dryers, pneumatic coal cleaning equipment, coal processing and conveying equipment (including breakers and crushers), screening (classifying) equipment, coal storage and coal transfer points, and coal loading facilities. The proposed rules are applicable to new or modified sources and not to existing sources. A summary of the limits is provided in Table 4.2-1.

Reference Methods have been established for monitoring emissions from sources. These are as follow:

Method 1 - Sample and Velocity Traverses for Stationary Sources

Method 2 - Determination of Stack Gas Velocity and Volumetric Flow Rate

TABLE 4.2-1

PROPOSED EMISSION LIMITS FOR COAL PREPARATION PLANTS

	Particulates	Opacity
Thermal Dryers	0.070 g/dscm*	30%
Pneumatic Coal Cleaning Equipment	0.040 g/dscm	20%
Coal Processing and Conveying	-	20%
Coal Storage Systems	-	20%
Coal Transfer and Loading Systems	-	20%

*grams/dry standard cubic meter

Method 3 - Gas Analysis for Carbon Dioxide, Excess Air, and Dry Molecular Weight

Method 4 - Determination of Moisture in Stack Gases

Method 5 - Determination of Particulate Emissions from Stationary Sources

Method 6 - Determination of Sulfur Dioxide Emissions from Stationary Sources

Method 7 - Determination of Nitrogen Oxides Emissions from Stationary Sources

Method 8 - Determination of Sulfuric Acid Mist and Sulfur Dioxide Emissions from Stationary Sources

Method 9 - Visual Determination of the Opacity of Emissions from Stationary Sources

Method 10- Determination of Carbon Monoxide Emissions from Stationary Sources

Method 11- Determination of Hydrogen Sulfide Emissions from Stationary Sources

Methods 1 through 9 are described in Federal Register, Volume 36, No. 247, pages 24882-24895. Methods 10 and 11 are described in Federal Register, Volume 39, No. 47, pages 9319-9323. These reference methods for determining compliance are generally non-continuous, manual methods.

The proposed rules for coal preparation plants require continuous monitoring of temperature of exit gases and pressure drop through control devices for thermal dryers. The surface moisture content of product coal from thermal dryers is to be determined daily using ASTM procedures D2234-72, D2013-72, and D271-70. EPA methods 1, 2, 3, and 5 are to be used to determine compliance with the emission limits described earlier. It should be noted that there is presently some controversy regarding the methods and significance of opacity determinations. Interested parties should contact EPA as to the proper procedures.

A report entitled "Processes, Procedures, and Methods to Control Pollution from Mining Activities" has been prepared by EPA. Copies are available at the U. S. Government Printing Office in Washington, D. C.

4.2.2 General Monitoring Procedures

Some of the emissions associated with production, processing, and transportation of coal, oil, and gas will be stationary point sources, e.g., thermal dryers for coal. Other emissions will include stationary area sources, e.g., particulates from strip mines, and mobile sources such as vehicles and trains.

Each of these different types of sources requires a different strategy. Mobile source emissions and area source emissions often must be either monitored using modeling and ambient air data or estimated using emission factors. Some new techniques are becoming available for area sources however. These are basically sensors which provide an integrated signal over a long path length sampling beam (NA-113).

Monitoring methods for well defined point sources such as stacks are fairly well established. However, accurate

source monitoring is more difficult than ambient monitoring. The gas streams typically are hot, difficult to access, and the pollutant concentrations may vary as a function of position in the exit stack. Introduction of standard gases in a meaningful manner often is difficult.

As with ambient monitoring, source monitoring may be intermittent or continuous, manual or automated. In addition, continuous monitors can be divided into in-situ and external systems. The external monitors normally require a sample conditioning system.

As discussed earlier, the reference methods tend to be of the intermittent manual type. Because of sampling difficulties these tend to be somewhat more expensive than ambient monitoring. As an example, it has been estimated by EPA that one particulate analysis using Method 5 will cost from $3,000 to $10,000 depending on the source, including some 300 man-hours of effort (Federal Register, Volume 39, No. 47, page 9309). The Federal Register does not list measurement accuracies for methods 1-11.

The same general instrument types are used for continuous source monitoring as for ambient monitoring. Pollutant concentrations in stack gases are normally several orders of magnitude higher than ambient levels so that the instruments must either be designed for higher levels or dilution systems must be used. For external monitors, a sample conditioning system often is required to provide an air sample suitable for analysis. This involves filtering out particulates (unless particulates are being monitored), removing excess water, and providing for introduction of calibration gases.

Because sample conditioning systems increase cost and complexity, and may decrease reliability, several in-situ monitors have been developed. In these systems the detection or measurement portion is mounted directly in the exit stack. As with the external monitors, however, calibration is often difficult. An excellent discussion of external analyzers, in-situ analyzers, and remote sensors has been provided by Nader (NA-113).

Nitrogen oxides are commonly measured with chemiluminescent analyzers, infrared analyzers, or ultraviolet analyzers. Sulfur dioxide is measured with ultraviolet analyzers, flame photometric analyzers, infrared analyzers, or pulsed-fluorescence analyzers. Carbon monoxide is most commonly measured with infrared analyzers. Continuous particulate analyzers utilize the beta particle detector.

5.0 EMISSION CONTROL TECHNOLOGY

This section of the report is concerned with emission controls. In many cases, the controls described are those that would normally be applied to the emissions estimated for various modules. In other cases, the controls described are beyond the current state-of-the-art of development, or are not widely used in current practice. The degree of application of the control systems is described. This section is divided into classifications of control by pollutant type. Particulate emissions' controls are discussed first, followed by SO_2, hydrocarbons, nitrogen oxides, and carbon monoxide. A final subsection deals with fugitive emissions.

5.1 Particulate Control Systems

Particulate pollutants originate from a variety of sources within the modules presented in Section 3.0, and the particulate emissions vary widely in physical and chemical characteristics. Similarly, the available control techniques vary in type, application, effectiveness, and cost.

The control techniques described herein represent a broad spectrum of information from many engineering and other technical fields. The devices, methods, and principles have been developed and used over many years, and much experience has been gained in their application. They are the techniques generally applicable to the broad range of particulate emission control problems found in the modules of this report.

The proper choice of a method, or combination of methods, to be applied to any specific source depends on many factors other than the characteristics of the source itself. While a certain percentage of control, for example, may be acceptable for a single source, a much higher degree may be required for the same source when its emissions combine with those of other sources. This section is designed to provide a review of the approaches commonly employed for controlling the sources of particulate air pollution. It does not review, however, all the possible combinations of control techniques that might bring about more extensive control of each individual source.

5.1.1 Sources of Particulate Emissions

Listed within each module presented in Section 3.0 of this report are its potential sources of air emissions.

The pollutants emitted vary from source to source and module to module. The following discussion summarizes those specific sources within the modules which emit particulates as either a part or all of its pollutants.

Diesel-Fueled Internal Combustion Engines

There are many diesel engines used in the modules of this report. The following is a list of the modules which use diesel equipment and the service that equipment provides:

- Strip Mining Module (coal) - This module uses diesel trucks for hauling coal and uses diesel powered bulldozers for cleanup and reclamation on the pit.

- Room and Pillar Mining Module (coal) - Diesel trucks haul ash refuse from the coal preparation plant and a diesel bulldozer is used at the refuse dump site.

- Strip Mining Module (Oil Shale) - Diesel trucks operate below grade hauling the mined oil shale to a primary crushing area.

- Coal Rail Transportation Module - Diesel fired locomotives are used.

- Coal Barge Transportation Module - Diesel engines are used to power the towboats.

- Oil Rail Transportation Module - Diesel fired locomotives are used.

- Oil Pipeline Transportation Module - Diesel fueled engines used in the pump stations.

- Oil Production Module - Diesel fueled engine drives the pump on the water flooding system.

Boilers and Process Heaters

The boilers and heaters used in the modules discharge small but measurable amounts of particulates in their flue gases. The oil production module has a boiler which produces steam for the secondary recovery system used at the well. This steam generator burns a fuel oil. The only other boiler used in the modules is in the transportation of crude oil by tanker. This boiler also burns fuel oil to supply steam for motive power.

Process heaters are used in both the oil and gas production modules. The oil production module uses a heater treater which burns natural gas. In the gas production module, there are three process heaters used. They all combust natural gas.

Crushing and Screening

Crushing and screening operations are significant contributors to particulate emissions. These operations are used in four modules: (1) coal strip mining, (2) coal room and pillar mining, (3) oil shale strip mining, and (4) oil shale room and pillar mining.

Conveying and Loading of Coal and Oil Shale

The mining of coal and oil shale and the transportation of coal involves extensive materials handling operations. Much of the particulate emissions due to these operations are considered fugitive dust losses and are difficult to quantify. Fugitive losses will be addressed later in a separate section. However, where the coal or oil shale is moved by conveyors and where coal is loaded through a tipple, particulate emissions can be estimated using EPA emission factors. The modules where materials conveying and loading are used are (1) the coal strip mining module (both conveying and loading), (2) the coal room and pillar mining module (both conveying and loading), (3) the oil shale strip mining module (conveying only), (4) the oil shale room and pillar mining module (conveying only), (5) the coal barge transportation module (loading only), and (6) the coal rail transportation module (loading only).

Coal Thermal Dryer

Both coal mining modules have a coal dryer as part of their preparation plants. These dryers emit significant amounts of particulates, which are primarily due to the fluidizing action in the bed of coal being dried.

Refuse Pile Burning

A solid waste stream is discharged from the coal preparation plants in both of the coal mining modules and is disposed of off site. This waste stream consists of dirt, clay, rocks, coal, slate, etc. These solids are dumped in a large refuse pile which may burn. The products of this combustion contain significant amounts of particulates.

5.1.2 Control Methods for Particulate Emissions

In this section potential particulate control methods for the specific sources outlined in the previous section are identified. Alternative methods for control will also be discussed and where the information is available, they will be compared on the basis of (1) the degree of control achievable, (2) the energy and raw materials required, (3) secondary pollution resulting from the control used, and (4) the capital and operating costs of the control method.

Diesel-Fueled Engines

Particulate matter emitted by diesel engines consists primarily of carbon and hydrocarbon aerosols resulting from incomplete combustion of the fuel. Small amounts of additional particulate emissions come from aerosols in the vent gases of the two-stroke-cycle diesel engine (from air box drains) and from crankcase oil going through the combustion process unburned.

Federal regulations implemented in 1970 limit smoke from new diesel engines. The regulations establish a maximum intensity of smoke emission (measured by reduction in light transmission) under conditions of severe engine loading.

No control devices are believed to be needed to reduce the smoke emissions from diesel engines to meet the established standards (NA-029). All new engines since 1970 have been adjusted by the engine manufacturer to a conservative fuel rate and power output to insure they meet the regulations.

Even though no control devices are used as such on diesel engines, several methods can be employed to insure the lowest possible particulate emissions. As vehicle mileage increases, proper fuel system adjustment, maintenance at appropriate intervals, use of the specified type of fuel, and good operating techniques can maintain low levels of visible emissions, particularly with respect to particulate carbon.

Boilers and Process Heaters

The boilers and process heaters used in the modules of this report are fired with either fuel oil or natural gas. Neither of these sources when properly maintained emit particulates at a rate which would exceed Federal regulations. For this reason, no particulate control device systems have been adapted to oil or gas fired heaters or boilers.

However, in keeping the particulate emissions that do result from them as low as possible, good practices must be observed. Although improper practices are frequently the cause of visible particulate emissions, insufficient information exists to permit numerical evaluation of their effect on emission levels (NA-029).

One method of good practice is proper design and application of the boiler or process heater. These combustion systems must be properly selected to meet load requirements, and its individual components should be compatible to avoid excessive emissions of particulate matter.

Consideration must be given to load characteristics when selecting a combustion system. The combustion system should be able to supply energy at a change in rate consistent with the demands of the facility without deviation from design limits.

Another technique that should be observed is proper installation. Properly installed equipment will promote clean, efficient operation of stationary combustion sources. Comprehensive installation instructions and plans are a prerequisite for proper installation. The designer of the entire combustion system and the manufacturers of the system's components are responsible for providing such plans and instructions. Equipment should be installed only by qualified personnel, and all work should be inspected for quality.

Through proper operation and good maintenance, reductions in particulate emissions from stationary combustion can be achieved. Stationary combustion units should be operated within their design limits at all times and according to the recommendations of either the manufacturer or another authority on proper operational practices. Combustion units and system components should be kept in good repair to conform with design specifications. Sensitive monitoring systems are helpful in indicating needed combustion system repair.

Another method of control for reducing particulates from boilers and process heaters is energy substitution. The particulate emission characteristics of fuels used in combustion processes may differ widely. Therefore, some measure of control may be effected by substituting among the various fuels. This technique has special value for control of many small sources when the cost of effective gas cleaning would be excessive.

Of the two boilers used in the modules in Section 3.0, both are oil-fired. For the boiler on board the oil tanker, the only feasible energy substitution would be to use a nuclear reactor to generate the steam necessary to power the ship. However, due to the large cost of such a system, nuclear power is unlikely to be used aboard oil tankers. The other oil-fired boiler is the one used in the oil production module as a steam generator for secondary oil recovery. This steam generator could easily be switched over to burning natural gas or the natural gas condensate which is produced by the well. Such a change could reduce particulate emissions by as much as 40% (NA-029).

The process heaters used in the natural gas production module burn natural gas. No alternative energy source which would emit less particulates could be substituted for the natural gas.

Crushing and Screening Operations

The crushing and screening of coal and oil shale in the four mining modules creates a potential particulate emission problem if left uncontrolled. There are several control techniques currently in commerical use which reduce these emissions. Those controls which are most often used are (1) gravity collectors (enclosures), (2) water sprays with or without chemical stabilizers, (3) wet scrubbers, (4) mechanical collectors, and (5) fabric filters.

The gravity collector is simply an enclosure constructed around the crusher and screening device which gives the coarse dust particles a longer time to settle out. Water sprays wet the coal or oil shale before the material enters the crushing and screening operations suppressing the dust

before it is emitted to the air. When the control system is a wet scrubber, mechanical collector, or fabric filter, an enclosure must be built around the crusher and screener. A fan is then located so that it draws the particulate-laden air from within the enclosure and blows it into the particular collection device being used. Clean air is discharged from a vent on the control system.

Table 5.1-1 compares these alternative control methods in terms of the degree of control achievable, energy and raw materials required, and secondary pollution resulting from the control units. It should be noted that the fabric filter possesses the potential for reducing the particulate emissions from crushing and screening to near zero discharge.

Conveying and Loading

During the conveying of coal and oil shale and during the loading of coal onto unit trains for shipment, a potential particulate emission problem exists. More specifically, the points of dust discharge for conveying is at the tail pulley, where oil shale or coal is received from prior equipment, and at the head pulley where the material is discharged. For the loading operation, the point of particulate discharge is at the bottom of the loading chute where the coal free-falls into the unit train hopper car.

Providing enclosures around these transfer points is the first step to be taken towards effective dust control (MO-114). A well-designed enclosure can be defined as a housing which surrounds the operation and contains, at least to a large degree, all dust dispersion actions. For the conveying transfer points, this would consist of a metal housing with rubber skirting fitted to the conveyor belt openings. The rubber curtain is

TABLE 5.1-1[1]

PARTICULATE CONTROLS FOR CRUSHING AND SCREENING OPERATIONS

Control Method	Percent Control	Pressure Drop inches H_2O	Secondary Pollution	Installed Cost $/cfm
Enclosure	60-80	——	Recovered Dust Disposal Problem	very small
Mechanical Collector	85-95	3.5-5.0	Recovered Dust Disposal Problem	0.35-1.05
Water Spray	50	——	Water/Solid Slurry	Variable
Water Spray with Chemical Wetting Agent	90	——	Water/Solid Slurry	Variable
Wet Scrubber	95+	5.0-15.0	Water/Solid Slurry	0.75-1.50
Fabric Filter	99+	2.5-3.5	Recovered Dust Disposal Problem	0.75-1.50

(1) Source: (BA-210)

an effective way to contain dust emissions; and the bottom edge of it should be cut to conform to the cross-sectional profile of the material conveyed on the belt. Although it is not common practice to enclose the loading equipment used at points where coal is transfered to unit trains, it would not be difficult to accomplish this. Heavy curtains could enclose the unit car being loaded, with the roof of the enclosure being the base of the loading tipple.

The next step in effective dust control is to remove the particulate-laden air from the enclosures and pass it through a control device such as a mechanical collector, wet scrubber, or baghouse. A fan would provide the power to move the air to the control system via dusts. A comparison of these three control methods can be seen in Table 5.1-1. The control device used would probably also service other parts of the preparation plant as well. An air duct from each enclosure would simply vent into a larger line which would lead to the control unit being used. The fabric filter provides the greatest control for the dust from conveying and loading operations with a near zero particulate discharge potential.

Coal Refuse Pile Burning

Burning coal refuse banks are a very significant source of particulate emissions to the atmosphere. Although they were once considered inevitable consequences of coal mining, modern control techniques have reduced their occurrence to a minimum. The pollutants emitted include, besides particulates, SO_2, NO_x, HC, and CO. The controls mentioned in this section for particulate emissions are also the controls which would be utilized for reducing emissions of any of the remaining four pollutants. For this reason, this discussion will be presented only once in the pollution control section, but will be applicable to the control of the other four pollutants.

The coal preparation plant from the room and pillar coal mining module disposes of its refuse material in a pile. The two basic methods of controlling burning coal refuse piles are (1) methods for extinguishing combustion and (2) methods for preventing combustion from occurring in the first place. Refuse from the preparation plant for the strip mine will be reclaimed along with the overburden.

In 1968 the Bureau of Mines completed a project which was a step towards developing a low cost procedure for quenching and removing burning coal refuse (MC-096). This control method involved dislodging the hot refuse with water cannons and removal with a bulldozer. The estimated cost for this technique was $0.66 per cubic yard. Another procedure tested at this time was using water cannons to cool the refuse material. Water sprinklers sprayed over the test site reduce surface temperatures to permit movement of rubber-tired vehicles over the project site. A bulldozer equipped with a ripper and a tractor-scrapper tore up and disposed of the quenched refuse at an adjacent strip mine area. The cost of this particular method was estimated at $0.44 per cubic yard removed.

Other known techniques which were tested by HEW demonstration projects include:

1) sealing or capping to prevent air circulation through burning refuse banks by using various chemicals and compound such as polyurethane foam, several types of plastic material, and waste dust from cement plants,

2) injection into the banks through drill holes of a mixture of sludge, "yellow boy", which is produced during the neutralization of acid mine/water with limestone,

3) drill hole injection of a mixture of vermiculite, limestone, and sodium bicarbonate into the refuse pile, and

4) the use of explosives to fracture fused refuse material to facilitate the infiltration and percolation of water through the hot cores.

To prevent refuse bank fires, a number of guidelines should be followed. First, proper attention must be directed to the selection and preparation of the refuse pile site. The best location for coal refuse disposal is flat terrain, which facilitates the movement of equipment. In hilly or mountainous regions coal waste disposal should be conducted in valley bottoms or ravines, since these areas are generally more accessible. The disposal site should be close to an adequate source of non-combustible solid materials which can be sandwiched between layers of coal refuse. Also, the sides of the disposal site should be covered with a non-combustible material and compacted to eliminate the inflow of air. Materials that may be considered include clay, shale, coal sludge fines, fly ash, and fines or wastes from plants such as cement, gypsum, and ceramic and glacial loess. Another important consideration in site selection and preparation for a refuse bank is whether or not coal seams or other highly carbonaceous zones are known to crop out. If such a condition exists, an adequate inert seal between the waste and the outcropping resources is needed. Also, the site should be graded to assure proper drainage away from the site, and watercourses should be diverted around or run through conduits beneath the disposal site.

The final consideration for the disposal of coal waste is proper refuse pile design. The best approach to accomplishing this is spreading the waste materials in horizontal layers and compacting the material to increase its strength. This technique will prevent slides on slumps of the refuse.

Besides using proper disposal techniques to control refuse bank fires, an alternative method of disposal could be used. The backfilling of abandoned underground mine tunnels with reject material is a technique that has found some application in the coal industry. If the mine is properly sealed, this disposal method eliminates any potential refuse burning. It also reduces the possibility of surface subsidence.

Coal Thermal Dryers

The coal preparation plants of the two coal mining modules include thermal dryers which are used to dry coal which has been mechanically cleaned. These fluidized-bed dryers are the source of the greatest particulate emissions within the preparation plants.

Controls used by the coal industry to reduce particulate emissions from the dryers include mechanical collectors, water sprays, and wet scrubbers. The mechanical collectors, usually cyclones, are used primarily for product recovery since a large amount of coal is carried up with the hot gases from the dryer bed. From the cyclones, the air stream is passed through either a water spray chamber or a medium energy wet scrubber. Baghouses are not used due to the danger of explosion of the coal dust.

Table 5.1-2 compares the controls which are used commercially on coal thermal dryers.

Besides using these control devices, the particulate emissions can be reduced by another control method - a process change. In 1972 only 19% of the coal mechanically cleaned was thermally dried (Minerals Yearbook, 1972). Alternative methods of drying coal use air as the drying medium. By using this type of process, particulate emissions from coal drying could be reduced.

TABLE 5.1-2

PARTICULATE EMISSION CONTROLS FOR COAL THERMAL DRYERS

Control Method	Percent Control	Pressure Drop inches H_2O	Secondary Pollution	Installed Cost $/cfm
Cyclones	20-85	3.5-5.0	None	0.35-1.05
Water Sprays Following Cyclones	95	4.5-6.0	Water/Solid Slurry	0.45-1.30
Wet Scrubber Following Cyclones	99-99.9	8.5-20.0	Water/Solid Slurry	1.10-2.55

5.2 SO_2 Control Systems

There are a number of sources of SO_2 emissions within the modules of Section 3.0. Of these sources, however, only two have SO_2 controls commercially available and being used. These two emission points are in Claus sulfur recovery plants, one in the natural gas production module, the other in the oil shale in-situ production module. Emissions from other modules are relatively small, and generally come from multiple and diverse sources, such as diesel exhausts from mobile equipment. In the following section the controls commercially available for Claus plants will be presented. The other SO_2 emissions are discussed in the subsequent section.

SO_2 Controls for Claus Sulfur Recovery Units

A Claus sulfur recovery unit is designed to convert sulfur compounds (H_2S, CS_2, COS, and mercaptans) that have been removed from a process stream by an amine treating unit or similar system into elemental sulfur. However, most Claus plants have a removal efficiency of 90 to 96%. The gases (mostly H_2S) that pass through the unit unconverted are usually incinerated to SO_2 since it is a less hazardous compound. For sulfur plants without controls, this SO_2 is discharged to the atmosphere.

Several processes are commercially available for treating this tail gas before incineration (RA-119). Some of these units recover sulfur as a product, others recycle recovered sulfur compounds back to the Claus unit. Table 5.2-1 compares six of these processes on the basis of (1) sulfur removal ability, (2) secondary pollution, (3) product produced, and (4) installed cost.

TABLE 5.2-1
PROCESSES FOR CLAUS TAIL GAS TREATMENT

Process	SO_2 Removal	Secondary Pollution	Product	Installed Cost, $'s For a 100 Long Tons per Day Capacity Claus Plant
Shell Claus Off Gas Treating (SCOT)	96%	None	None	630,000 - 900,000
Wellman-Lord	Removal to 100 ppm	None	None	800,000
Sulfreen	75%	None	Sulfur	320,000 - 570,000
IFP	Removal to 500-1000 ppm	None	Sulfur	450,000 - 800,000
Clean Air	Removal to $<$250 ppm SO_2	None	Sulfur	480,000 - 800,000
Beavon	Removal to $<$250 ppm SO_2	None	Sulfur	700,000 - 1,000,000

SOURCE: RA-119

Other SO_2 Emissions

Besides the SO_2 emissions from Claus plants, all but one of the modules (gas pipeline transportation) of Section 3.0 release SO_2 to the atmosphere. These emissions result from the combustion of fuel which contains a small amount of sulfur.

At present there are no processes commercially available or in the developmental stage which are designed to remove SO_2 from the flue gas of small sources such as those found in the modules of this report. Some degree of sulfur dioxide control, though, can be accomplished by either substituting a lower sulfur fuel, switching to electrical power, or making a process change. Those processes which could control their SO_2 emissions by substituting a lower sulfur fuel are the ones which burn fuel oil or coal. The following list identifies these specific sources, the modules they belong to, and the type of fuel burned.

- In both the strip and room and pillar mining modules for coal and oil shale diesel fueled trucks and bulldozers are used. SO_2 emissions could be reduced by burning a lower surfur diesel fuel.

- Thermal dryers are used in both the coal strip mining and the room and pillar mining modules. These dryers combust coal as a source of heat for drying the wet coal. A lower sulfur coal could reduce SO_2 emissions.

- In the oil production module and in the crude oil transportation module, fuel oil is burned in boilers. Lower sulfur fuel oil in both cases would reduce SO_2 emissions. Also, it may be possible for the steam generator boiler in the oil production module to switch to casing head gas as a source of fuel.

- In the transportation modules, diesel fuel is burned in locomotives, towboats, and oil pipeline booster stations. For each source, SO_2 emissions could be reduced by the use of a lower sulfur diesel fuel.

Besides controlling SO_2 emissions by fuel substitution, switching to electrical power offers a complete elimination of SO_2 discharges. Those processes which could be switched to electrical power are: the diesel powered pump used in the water flood system of the oil production module and the oil pipeline booster stations. Electric powered oil booster stations are quite common. Approximately 70% of crude oil pipeline booster stations are powered electrically (BA-234).

Process change is another method of SO_2 emission control. With this approach, a processing alternative which emits less SO_2 can be substituted for one which emits a greater amount. This technique is applicable to coal dryers. The thermal dryers used on the two coal mining modules could be changed to dryers which use air as the drying medium. Thus, the SO_2 emissions could be eliminated by such a switch.

5.3 Hydrocarbon Control Systems

Within the modules of Section 3.0 are a number of hydrocarbon emission sources. These emission points can be divided into three categories: (1) emissions from the combustion of a fuel, (2) emissions from evaporation of a volatile liquid hydrocarbon, and (3) fugitive emissions from miscellaneous process leaks. Control systems applicable to the first two categories will be discussed in this section, while controls for the fugitive losses will be addressed in Section 5.6.

Controls for Combustion Sources

The type of hydrocarbon controls to be used on combustion sources depend upon the particular kind of combustion device. These combustion sources are characterized as those which are fired externally, such as boilers and process heaters, and those which utilize internal combustion, such as diesel-fired engines.

Of the externally-fired equipment, there are two types of boilers: one used in the oil production module for generating steam, the other in the crude oil tanker transportation module used as the ship's power plant. Also there are three types of process heaters: thermal dryers in each of the two coal production modules, the heater treaters in the oil production module, and heaters providing heat to regenerate glycol and amine solutions in the gas production plant modules.

Hydrocarbon emissions from externally fired equipment can be reduced or eliminated by essentially three techniques: improved operating practices, fuel substitution, and process change (NA-032).

Good operating practice is the most practical technique for reducing hydrocarbon emissions from these sources. Even the best equipment will perform poorly if improperly applied, installed, operated, or maintained. Hydrocarbon emissions are directly related to the three common combustion parameters of time, temperature, and turbulence. A high degree of fuel and air turbulence will greatly reduce hydrocarbon emissions, increase combustion efficiency, and reduce fuel consumption.

Stationary combustion units (including the oil tanker boiler system) should be operated within their design limits at all times and according to the recommendations of the manufacturer in order to achieve a high degree of combustion efficiency. Combustion units and components should be kept in good repair to meet design specifications. Flue gas monitoring systems such as oxygen and smoke recorders are helpful in indicating that the furnace is being operated properly and that emissions are being held to a minimum.

Fuel substitution offers another method of controlling emissions of hydrocarbons. Emissions from coal thermal dryers can be reduced by fuel substitution. A switch from coal to fuel oil or gas could reduce organic emissions from these dryers. This reduction is, in part, affected by the better mixing and firing characteristics of a liquid or gaseous fuel as compared to those of a solid fuel.

The process change approach offers another method of reducing hydrocarbon emissions. There are three emission sources which, through a process change, could eliminate the need for fuel combustion. These are the thermal dryers used in the two coal mining modules and the heater treater used in the oil production module. For the thermal dryers, instead of using heat as a means of drying the wet coal, air could be used.

Air drying techniques are used in many coal drying applications in the United States which require no fuel combustion. As a substitute for the heater treaters, there are three other commercially available processes available for separating crude oil and water emulsions. These alternatives are: (1) chemical destabilization, (2) electrical coalescence, and (3) gravitational settling. Since none of these units require heat input, hydrocarbon emissions due to combustion are eliminated.

Besides the hydrocarbon emissions from externally-fired equipment, there are also hydrocarbon emissions from internal combustion diesel engines. See the discussion on particulate control systems in Section 5.1 for a list of modules using diesel fueled equipment.

Methods of controlling hydrocarbon emissions from diesel equipment include good practice techniques. As vehicle mileage increases, proper fuel system adjustment is most important. Also, maintenance at appropriate intervals and the use of the specified type of fuel aid in reducing hydrocarbon emissions. Diesel fuel modification offers another method for decreasing hydrocarbon emissions. A major cause of hydrocarbon emissions from diesel engines is incomplete combustion of the dispersed fuel droplets, sometimes manifested as white smoke. The diesel fuel characteristic normally related to white smoke is the cetane number. Smoking tends to decrease with increasing cetane numbers. The addition of cetane improvers, such as isopropyl nitrate, tend to suppress white smoke and to reduce hydrocarbon emissions (NA-031).

Hydrocarbon Controls for Non-Combustion Sources

There are several quantifiable sources of hydrocarbon losses from within the modules described in Section 3.0 which are not due to fuel combustion. These losses are due to evaporation of a volatile hydrocarbon during storage or loading operations. The sources of these emissions are:

- crude oil storage tanks located on site at the oil well (oil production module),

- condensate recovery tanks, one located at the gas well site and the other at the gas processing plant (natural gas production module),

- crude oil tanker storage compartments (crude oil tanker transportation module), and

- railroad crude oil tank car (crude oil rail transportation module).

The controls available for reducing hydrocarbon losses from crude oil and natural gas condensate storage tanks include floating roofs or internal floating covers and vapor recovery units. Floating roofs can reduce breathing losses approximately 80% compared to a fixed roof tank. Installation of a vapor recovery unit, though expensive, can control emissions from a fixed roof tank by as much as 95% (EN-071).

Tanker emission controls consist of venting vapor expansions to an on-board vapor recovery system which reliquefies the vapors. Pressure/vacuum valves can also be applied to tanker

compartments for minimizing the quantity of vapors processed in the vapor recovery unit.

Hydrocarbon evaporation losses from crude oil rail cars while underway are very small. However, during loading and unloading operations a potential hydrocarbon emission problem exists. This is also true for the tanker module. A significant portion of this problem can be eliminated by using bottom loading techniques when filling rail cars instead of the top or splash loading method. Bottom loading is an inherent technique for tankers. Besides the bottom loading technique, hydrocarbon emissions can be further reduced by installing a vapor collection device manifolded into a vapor recovery unit. Assuming a vapor collection efficiency of 95% and a 95% efficient vapor recovery unit, emissions can be reduced by 90% over an uncontrolled bottom loading system.

5.4 Nitrogen Oxides Control Systems

The formation and release of NO_x occurs with any process which utilizes combustion. There are numerous sources of this pollutant within the modules described in Section 3.0. In fact, every module except the coal slurry pipeline has one or more sources discharging NO_x.

Various approaches have been developed, and others are under development for controlling emissions of NO_x from combustion processes. This discussion is divided into two categories - controls for external combustion sources and controls for internal combustion sources.

Commercially Demonstrated NO_x Controls for External Combustion Sources

NO_x controls for external combustion systems include combustion operating modification, combustion equipment design modifications, flue gas treatment, fuel substitution, and process modifications (NA-005).

The formation of NO_x in an external combustion system is affected by the flame temperature, the amount of oxygen available to combine with the nitrogen, and the residence time of exhaust gases within the firing chamber. High flame temperatures, large excess air quantities, and short residence times of exhaust emissions in the combustion chamber enhance the formation of NO_x. Combustion operating and equipment design modifications are made with the intent of reducing the excess air in combustion, reducing peak gas temperatures, and lengthening the residence time of flue gases in the combustion chamber.

Two-stage combustion in oil- and gas-fired boilers has reduced NO_x emissions by 30 to 50 percent (NA-005). Low-excess-air operation has reduced NO_x emissions from these boilers by 30 to 60 percent, depending upon the percentage of excess air, the design of the boiler, and the type of firing. Also, by changing the firing of boilers from front wall or opposed firing to tangential firing, NO_x has been reduced from 30 to 40 percent. A modified two-stage combustion technique, combined with low-excess-air firing has reduced the stack-gas NO_x concentration in the flue gas by almost 90% (NA-005).

Proper burner location and spacing also aids in reducing NO_x emissions. Arrangements which lower the flame temperature and radiate heat more evenly have been the most effective.

The combustion modifications discussed above are more applicable in the case of a large external combustion source such as a utility boiler. They represent the most effective controls which could be applied to a large boiler such as the one used on board the oil tanker module. However, there are serious obstacles to the practical use of these control techniques for the relatively small process heaters, boilers, and dryers used in the rest of the modules. The specific combustion modifications considered most promising (low-excess-air, flue gas recirculation, and two-stage combustion), all require additional equipment and operating control and are expensive. Generally, the smaller the combustion unit the more the control will cost.

A partial reduction in NO_x emissions can be realized by converting from coal to other fuels. This control method could be used on the coal-fired thermal dryers. A fuel oil could be burned in the place of coal.

Another method which can be utilized to reduce NO_x emissions from certain sources is through making a change from a process which requires fuel combustion to one which accomplishes the job without the need for fuel. Such an option is available to the thermal drying of coal and to the oil-water separators at oil well sites. In place of a coal fired thermal dryer, systems which utilize air as a drying medium could be used. And, in place of gas fired heater treaters for breaking the oil-water emulsions from oil wells, either chemical destabilization, electrical coalescence, or gravitational settling could be used. Since none of the process changes mentioned require fuel combustion, NO_x emissions could be eliminated with their use.

Controls for NO_x Emissions from Internal Combustion Engines

There are two types of internal combustion engines found in the modules described in Section 3.0. These are engines fired by either diesel fuel or natural gas. The diesel engines serve a variety of functions within the modules. The gas engines are used to drive compressors for the transport of natural gas.

Several techniques are available for controlling NO_x emissions from internal combustion, diesel-fired engines. These involve combustion chamber design, the use of special fuel type, and variation of compression ratio (NA-031).

Combustion chamber modifications which have been found to reduce NO_x emissions have involved design of the precombustion chamber, the turbulence chamber, and the use of "energy cells." Energy cells provide controlled combustion to prevent high peak pressures and rough operation.

There are indications that by increasing the fuel's API gravity a decrease in NO_x emissions occurs in diesel engines. NO_x production decreases about 25 percent when the gravity of the fuel is increased from 30.9 to 42.8^{o} API. Thus, it appears possible to modify NO_x emissions by tailoring fuel properties. Also, there are indications that chemically bound nitrogen in fuel may play an important part in NO_x emissions. If so, burning low-nitrogen fuels could be an effective method of controlling NO_x from both internal and external combustion sources. The use of such special fuels can add considerably to fuel costs, however.

The use of variable compression ratio diesel engines tends to maintain a preset peak combustion pressure in the combustion chamber. This may be a means of avoiding the excessively severe cycles which occur frequently in conventional diesel engines, and which are the cause of a disproportionate part of the NO_x emissions from. These engines were first developed for the military.

Switching from diesel power to electrical power offers a means of completely eliminating NO_x from those sources where such a change is feasible. Within the process modules, there are two such sources. One, within the oil production module, is a diesel engine used to drive the water flood system pump; the other, within the oil pipeline transportation module, is a diesel engine used to drive the line pumps in the booster stations. In both cases, electrical power could be substituted for diesel power.

5.5 Carbon Monoxide Control Systems

Carbon monoxide is formed when carbonaceous fuels are burned with insufficient oxygen for the formation of carbon dioxide. It is also formed from CO_2 at high temperatures under chemically reducing conditions. There are numerous sources of CO within the modules described in Section 3.0. From each process which burns a fuel, except possibly the natural gas fueled engines, some carbon monoxide is emitted. These combustion points are listed in Section 5.1. CO controls for external combustion sources and internal combustion engines are discussed in the following paragraphs.

CO Controls for External Combustion Sources

The most practical technique for reduction of CO emissions from external combustion sources is simply good practice. This involves proper design, installation, operation, and maintenance of the combustion equipment and auxiliary systems (NA-004). Good practice guidelines are published by the fuel industry, equipment manufacturers, engineering associations, and government agencies. Combustion units should be operated within their design limits and according to the recommendations of the manufacturer. Combustion units and components should be kept in good repair to continue to meet design specifications. Sensitive CO monitoring systems are helpful in indicating the need for combustion system maintenance.

Proper fuel-air ratio adjustment is of major importance for reduction of CO emissions from stationary combustion sources. Flue gases from the best designed combustion unit may contain substantial concentrations of carbon monoxide if insufficient air is provided for combustion. Carbon monoxide emissions can

also increase when excessive air is used. This can cool combustion temperatures below the point where optimum oxidation of fuel and CO would occur.

In the design of a combustion system, CO emissions can be minimized by (1) a high combustion temperature, (2) intimate contacting of fuel, oxygen, and combustion gases, (3) sufficient reaction time, and (4) low effluent temperature. Another important step in the combustion system design is making an accurate estimate of the load on the system. Firing in excess of design rates is perhaps the greatest cause of excessive CO emissions from external combustion systems.

Generally, automatic (as opposed to manually operated) combustion control of the fuel-air ratio offers the potential of increased efficiency, lower CO emissions, and lower operating costs. Combustion control equipment is primarily concerned with two functional aspects, namely, adjustment of the fuel supply with variation of load demand, and correction and control of the fuel-air ratio corresponding to the fuel supply.

Fuel substitution offers another method of controlling emissions of carbon monoxide. The thermal dryers used on the coal preparation plants of the two coal mining modules could be switched from coal to fuel oil or natural gas. This would reduce carbon monoxide emissions from these sources primarily because of the better mixing and firing characteristics of the liquid or gaseous fuels.

Elimination of combustion sources always reduces CO emissions. There are two previously described processing alternatives in which fuel combustion is eliminated. Thermal dryers used in the coal mining modules can be replaced by air

tables, and the heater treater used in the oil production module can be replaced by any of three commercially available alternatives for breaking crude oil-water emulsions which do not require the use of heat. These are: (1) chemical destabilization, (2) electrical coalescence, and (3) gravitational settling.

CO Controls for Internal Combustion Engines

The exhaust gases from the diesel-fueled engines used in the modules described in Section 3.0 contain varying amounts of carbon monoxide depending on the condition of the engine. (See the discussion on particulate control systems, Section 5.1, for a list of those modules which have diesel-fueled engines.)

Carbon monoxide emissions from diesel equipment are controlled most effectively through good practice. As vehicle mileage increases, proper fuel system adjustment is most important. Also, maintenance at appropriate intervals and the use of the specified type of fuel are important in maintaining carbon monoxide emissions at the lowest practical level (NA-031).

Carbon monoxide emissions from diesel engines, when operating within their normal design limits, with excess air and with a relatively high combustion temperature, are inherently low. Thus, by keeping the engine in proper tune, carbon monoxide emissions can be minimized.

5.6 Fugitive Emissions Control

Particulates and hydrocarbons are two of the major fugitive emissions. Approaches for controlling these emissions are discussed in this section.

Particulate Fugitive Emission Controls

The sources of particulate fugitive losses in the modules relating to the mining, processing, and transporting of coal and oil shale include:

- vehicle travel over unpaved roads and areas within the oil shale strip mining pits and within the oil shale room and pillar mine,

- the blasting operations which are used to remove the overburden in the coal and oil shale strip mines, and also to fragment the oil shale for extraction from the underground oil shale mine,

- the handling of overburden, extracted coal and oil shale, and refuse material which comes from the screening and sizing of oil shale and from the coal preparation plants, and

- the transportation of coal via unit trains and barges.

The travel of trucks, bulldozers, and other mining equipment over unpaved roads and the areas around coal and oil shale mines creates a potential fugitive emission problem. The most common control and easiest one applied is the watering down of dusty surfaces. Regular watering of these areas can reduce emissions by 30 to 70%, depending on the extent of surface use (PE-120).

In addition to emissions from vehicle travel over unpaved areas, blasting operations contribute to the fugitive particulate problem in the coal and oil shale extraction modules. Blasting is used to aid in the removal of overburden from coal and oil shale and also for fragmenting the oil shale in the room and pillar mine before extraction. Techniques for controlling particulates from blasting operations include spraying water or water with chemical wetting agents over the area to be blasted and infusing water by pressure into the material being blasted. The applicability of water infusion is limited primarily to coal seams with high porosity and with few large-sized cracks.

Large amounts of materials are mined, hauled, and processed within the coal and oil shale mining modules. These operations are the source of significant fugitive dust losses. Water spraying with or without chemical wetting agents is the best method for controlling dust from these sources.

Coal or oil shale storage piles around mines are potential fugitive dust sources. A dust control efficiency of 50% can be assumed for watering of these storage piles. Manufacturers of continuous chemical spray systems for use in dry materials handling and storage operations have claimed dust removal efficiencies as high as 90 percent (PE-120).

Another source of fugitive particulate emissions is from the transportation of coal via unit train and barge. Some windage losses of coal dust occur in coal movements by these two methods. Techniques available for control include wetting of the coal, chemical spraying of the coal, and special loading where larger pieces of coal comprise the top layer in a hopper car or barge. Control efficiencies for these methods are estimated to be 30% for layering, 50% for water spraying, and 90% for spraying with a chemical wetting agent.

Hydrocarbon Fugitive Emission Controls

The potential hydrocarbon fugitive emission sources include:

- the underground room and pillar coal mine,
- the producing wells used in the coal and oil shale in-situ recovery processes,
- the oil production well operations, and
- the production, transportation, and processing of natural gas.

Methane has been a problem in United States coal mines for as long as underground mining has been practiced. Elimination of this fugitive hydrocarbon problem from below-ground mines is of utmost importance because of the fire and explosion hazard it presents. Presently, high ventilation rates through mine shafts are being maintained as a means of controlling dangerous buildups

of methane. However, ventilation does not eliminate or control the amount of methane lost to the atmosphere.

One method of methane control which appears promising is the removal of methane before the mining operation begins. This is accomplished by drilling vertical boreholes from the surface into the coal seam at various spots and recovering the natural gas. Other methods available include the use of horizontal holes in a coal seam to infuse an active face area with water and thus divert the flow of methane, the use of long horizontal holes to dewater and degasify a section prior to mining, and hydraulic fracturing of coal to increase its permeability, thus increasing methane flow through the coal to a vertical or horizontal degasification hole (ZA-044).

The production of oil and gas from underground reservoirs, coal and oil shale in-situ operations, the transportation of oil, and the transportation and processing of natural gas are potential areas of fugitive hydrocarbon emission problems. Sources of these fugitive losses include wastewater separators, high-pressure gas-condensate separators, gas-oil separators, pump and compressor seals, relief valves, pipeline valves and corroded pipe flanges (MI-146).

Hydrocarbon emissions from wastewater separators may be minimized by (1) sealing the oil/water mixture from the atmosphere, (2) venting the recovered vapor to a vapor recovery unit, and (3) providing floating covers over the separator.

The major fugitive hydrocarbon losses in high-pressure gas-condensate separators are those associated with relief and small volume gas venting systems. Relief systems consist not only of the primary relief valves, but also discharge piping

systems, liquid knockout drums, and a means of disposing of relieved gas through flares or vapor recovery units.

Methods available for controlling fugitive losses from pump and compressor seals include converting packed seals to mechanical seals and/or installation of double seals. Losses from around pipeline valves may be reduced by regular maintenance of their stuffing boxes. Also, chatter in check valves can be minimized by sizing them to be fully open in normal operation, thus preventing excessive wear on moving parts.

Properly monitored inhibition programs can be an effective technique for reducing corrosion problems of pipes and flanges. Regular ultrasonic and/or radiographic inspections should be made of piping and valves to determine wall thickness losses. The results of such an engineering study should result when warranted, in revisions to equipment specifications or pressure ratings, where the inspected equipment is judged a potential source of fugitive emissions. Design practices currently used to control corrosion in piping include cathodic protection, internal and external coatings of steel pipe, and proper selection of pipe material.

6.0 POTENTIAL PRODUCTION PROBLEMS

In the production of coal, oil, and gas, due consideration must be given to potential environmental effects and to associated problems. This section reviews the potential sources of pollutants and major constituents of the contaminants and their effects on receiving media. The availability of primary resources is discussed briefly. These resources include energy sources (electric power, diesel oil, and natural gas) and water required for production operations. Federal, state and local laws concerning emissions and water availability are also discussed.

6.1 Coal Production

Coal production operations affect the quality of air, water and land in the surrounding areas. This section presents a discussion of the problems of airborne and waterborne emissions associated with coal production. In addition, energy sources (electric power and diesel fuel) and water requirements which may impose some constraints on coal production are discussed.

6.1.1 Underground Mining Operations

Underground mining pertains to mining techniques which employ tunnels and shafts to reach the coal deposits to be extracted.

Airborne Emissions

The underground environment is contaminated with airborne matter consisting chiefly of coal dust and methane gas. Coal dust is formed by the release of the dust trapped in

fractures in the coal. It is also released during the fragmentation process and in the handling and transportation of coal. The coal dust, upon release, normally is suspended in the methane contaminated air. This situation causes a visibility problem and a potential explosion risk.

Methane is present in the coal, either compressed in the fractures or absorbed into the coal. The rate of methane release is dependent upon the speed of advance of a heading and the degree of fragmentation. Underground operations do not in general affect the air quality of the external environment.

Waterborne Emissions

Waterborne contaminants such as acids, dissolved solids, and suspended solids are released from underground mining operations. Acid mine water is formed as a result of water seeping into the underground mine through the pyrite-bearing strata. Water seepage is initiated by the disturbance of the strata. The quantity of seepage is governed by such factors as the degree of subsidence, surface topography, type of strata, and annual rainfall. Normally, the acid mine water is pumped out of the mine.

The discharge of mine water to the environment is regulated by Federal, state, and local laws. Thus, the mine water must be treated prior to release, and must comply with acidity-alkalinity standards such as those set forth by the various states (EN-219).

Energy and Water Requirements

Electric power is the primary energy source for underground mining operations. On the average, power consumed is 18 kwh per ton of coal produced. Power is normally delivered by high-voltage (14 kv or higher) power transmission lines to the larger underground coal mining operations. Power transmission is a problem for mines not near generating stations. Water required for controlling coal dust emissions is minimal.

6.1.2 Surface Mining Operations

Surface mining involves the removal of overlaying materials, such as topsoil and rock, to gain access to the coal deposits. Two methods generally employed are strip mining and auger mining. The choice of mining method depends on terrain, seam depth and thickness, deposit size, local geology, and other factors.

Airborne Emissions

Potential sources of airborne emissions from surface mining include dust and other materials emitted during the fragmentation process and blasting operations, major combustion products released by the diesel oil fueled equipment used in mining operations, and dust from mines and waste piles. In some surface mining operations waste piles are burned, releasing products of combustion and other unburned materials into the atmosphere.

Air emissions from surface mining operations fall under the category of area emissions. The assessment of the impact of these emissions requires field measurements and some computational

analyses using atmospheric dispersion models with topography effects to determine the maximum concentrations in affected areas. These computed maximum concentrations can be compared with the Federal, state, and local ambient air quality standards.

Waterborne Emissions

Potential pollutants of streams and underground water supplies from coal surface mining operations include sulfuric acid, iron, silt and trace metals such as arsenic, copper, lead manganese, and zinc. For example, in the Appalachian surface mining regions, it has been observed that the siltation from the mined areas is around 1,000 times higher than the unmined areas. Control of these potential pollutants will be essential in future coal resource developments.

Energy and Water Requirements

Energy for surface mining operations is supplied in the form of electric power and diesel oil. Average energy requirements are about 14 kwh of electricity and 0.20 gallons of diesel oil per ton of coal produced. High voltage power accessibility may be a problem in remote areas. Water supply in not a problem for most mining sites.

6.1.3 Coal Preparation

Raw coal contains sulfur compounds, dirt, clay, rock, shale, and ash. Coal quality can be improved by mechanical cleaning, which, in effect, removes coal impurities, reduces sulfur and ash contents, and ultimately increases the Btu content per pound of clean coal. This can be achieved by cleaning either by a dry method, by a wet method, or by a combination of

the two. Details of these methods are presented in Section 2.1.

During coal cleaning some contaminants may be released to the environment. This section presents the potential environmental effects and problems associated with coal cleaning at a coal preparation plant. Included among these problems are airborne and waterborne emissions, energy and water requirements, and the significance of existing laws, regulations, and guidelines.

Airborne Emissions

Pulsating air columns and thermal dryers are the major sources of airborne emissions from coal cleaning operations. From pulsating air columns (the dry process method), particulates are the only significant airborne emissions. Approximately three pounds of particulates per ton of coal feed are released from these units to the environment. Thermal dryers release both particulates and combustion products. Air pollution regulations require that these emissions be controlled. For example, proposed EPA standards for particulate emissions state as follows:

> "Particulate matter from thermal driers must not be more than 0.070 grams per dry standard cubic meter (0.031 grain per dry standard cubic foot), with less than 30 percent opacity; while particulate matter from pneumatic (dry) coal cleaning equipment must not be more than 0.040 gram per dry standard cubic meter (0.018 grain per dry standard cubic foot), with less than 20 percent opacity."

Coal preparation plants also produce refuse piles consisting mainly of sulfur rich coal. Improper disposal of the refuse pile may initiate low-temperature oxidation of the coal with an accompanying increase in temperature within the pile. Ultimately, this can result in the ignition of the refuse pile from which undesirable gases such as SO_2, NO_x, and hydrocarbons can be emitted.

Waterborne Emissions

The contaminants in the process water from wet coal cleaning consist of suspended solids, which are chiefly fine clay and coal, and dissolved solids, which may contain iron, aluminum, calcium, magnesium, sodium, and potassium. Water effluents may also contain surface-active organic compounds such as alcohols or kerosene, which are added in some coal cleaning plants to enhance frothability in the process. Water contaminants in refuse pile runoff are sulfuric acid, sulfates, manganese, and iron.

Energy and Water Requirements

Energy required for coal preparation plants is supplied as electrical energy and diesel oil. Electricity is the main energy source. It is consumed at the rate of 3.7 kwh per ton of coal cleaned. Electricity can be generated by in-plant process boilers or it can be delivered via transmission lines. Transmission lines are a problem for remote plant sites. A coal preparation plant producing 10,000 tons of cleaned coal per day needs about 580,000 gallons per day of make-up water for wet cleaning operations. Water supply for such purposes may be a problem in siting large coal preparation plants, especially in the more arid sections of the nation.

In general, the Mississippi River divides the relatively humid east coast from the more arid western United States. Of course, some western areas (notably the northwest) are also humid, but by and large, the western central states are in a relatively arid region. Figure 6.1-1 shows the relative water abundance or deficit across the United States (US-083). Water abundance is defined as a rainfall rate greater than the evaporation rate, and water deficit is just the opposite. Figure 6.1-2 gives a general impression of the sizes and locations of major rivers in the United States. This figure indicates that the western central states do not have an overabundance of large river water supplies.

There are other data that indicate this same relative trend toward possible water shortages and the necessity to carefully scrutinize water availability for energy development. Production capabilities are presently being considered at rates that would exceed the reliable natural water supplies at the facility sites.

Another potential problem relates to water laws and regulations. Recent reports (FE-076) indicate that the availability of water in any area is governed partly by Federal actions but more importantly by physical limitations and by state and local prerogatives. The four factors determining availability are:

(1) Runoff. Some regions have inadequate rainfall and runoff to meet the demands of all water users.

(2) Institutional Factors. Federal and state laws, interstate compacts, and international treaties govern the allocation of water in many areas.

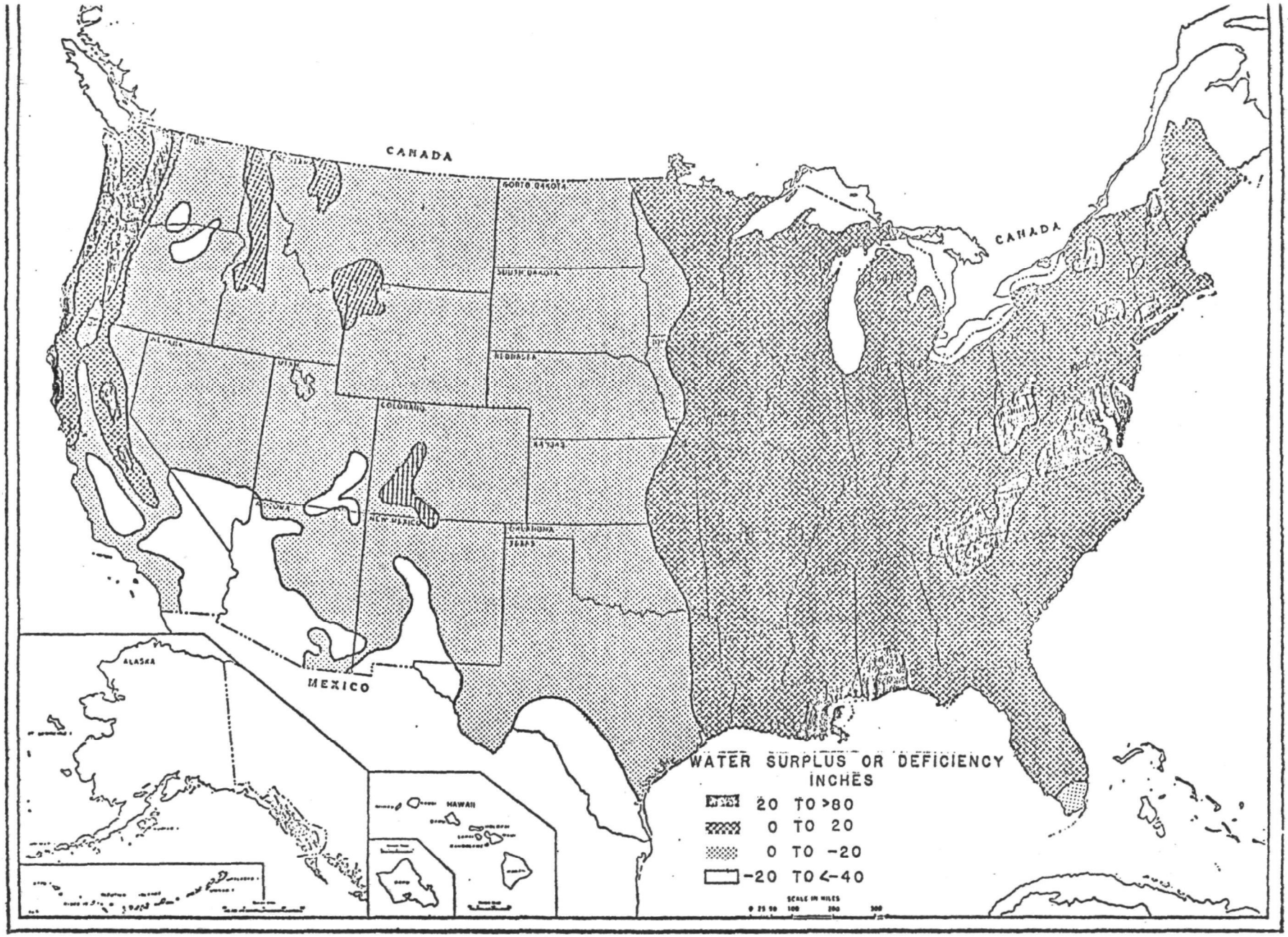

FIGURE 6.1-1 RELATIVE WATER SURPLUS OR DEFICIENCY IN THE UNITED STATES

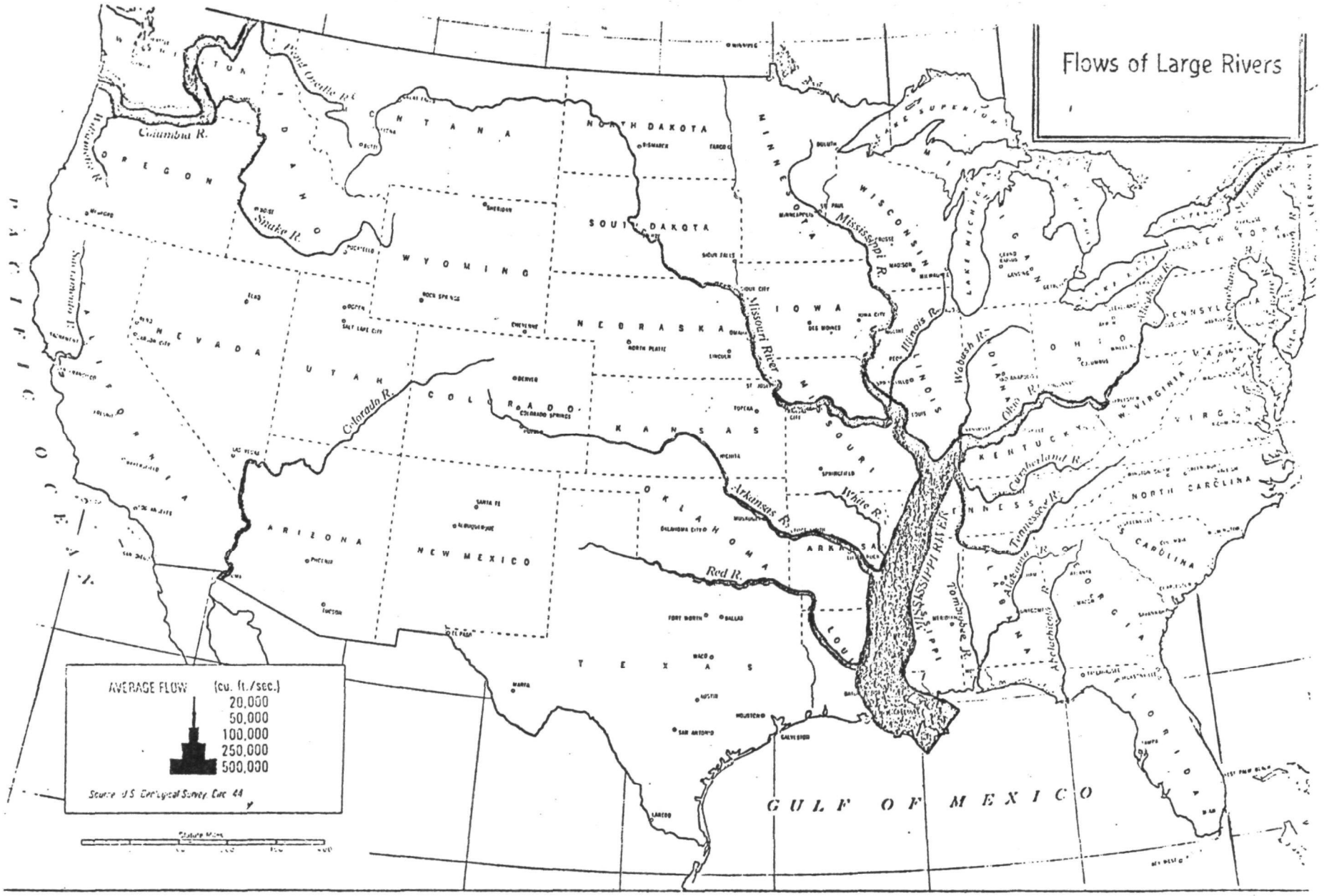

FIGURE 6.1-2 LARGE RIVERS OF THE UNITED STATES

(3) Environmental Considerations. The Federal Water Pollution Control Act Amendments regulating thermal pollution, sedimentation and acid run-off from strip mining, increases in salinity, salt water intrusion, and coastal water quality strongly affect water availability.

(4) Capital Investment and Repayment. Construction of water supply projects for energy activities will be affected by debt limitations and success or failure of bond issues.

Factor number 2 is of greatest consequence to this discussion. The major constraints to water use in many regions of the United States are administrative in nature. There are legal agreements on water availability among the Federal government, the individual states, and the river basin authorities. For examples, summaries of the Law of River Compacts, State Water Laws, and Federal Water Laws are presented in Appendix 6-1.

6.2 Oil and Gas Production

The three major operations in both the offshore and the onshore production of oil and gas are exploration, drilling, and production. Environmental problems associated with drilling and production operations are discussed in this section.

6.2.1 Drilling Operations

Problems during routine drilling operations include ambient air and effluent pollution and supply of energy and water.

Airborne Emissions

The chief sources of air emissions are blowouts and well-testing operations. Blowouts release to the atmosphere considerable quantities of hydrocarbon liquids and gases in addition to hydrogen sulfide and salt water. In addition, the evaporation of spilled oil in wastewater contributes to the hydrocarbon emissions. Of course the rate of evaporation is dependent on the composition of the oil and prevailing meteorological conditions. The gas or oil produced during well-testing is normally burned. The products of combustion during this time are released to the environment. This practice has been banned by numerous states.

Waterborne Emissions

During drilling operations, blowouts and spills are the major sources of water pollution. A blowout is recognized as the greatest threat of hydrocarbon pollution in offshore waters during drilling.

Energy and Water Requirements

Energy required for drilling oil and gas wells varies with rig size, type of formation drilled, well depth, and the time on well. The forms of energy used in drilling wells are diesel oil and natural gas. Diesel oil is normally used in internal combustion engines for drilling crude oil wells. Gas development wells usually employ gas-fueled engines.

Diesel oil and natural gas used in drilling wells have been estimated to vary from 900 to 1,800 gallons of diesel oil per day and from 150,000 to 300,000 cubic feet of natural gas per day, respectively (FE-084).

The water consumed in well drilling is approximately 17.3 gallons of water per barrel of oil produced, or the equivalent of 3.05 gallons of water per million Btu's produced (FE-076). For example, an oil well that can produce about 100,000 barrels of crude oil per day using secondary and tertiary recovery methods can consume as much as 1.7 million gallons of water per day. The availability of such substantial quantities of water from other regions for the development of oil wells can be a major problem, especially in areas where water is not abundant.

6.2.2 Production Phase

Potential releases to the environment can occur during routine production operations, during stimulation efforts from acidizing, and from accidents.

Airborne Emissions

Air emissions related to oil or gas production are released through venting or burning of vapors and liquid waste materials. These emissions consist mainly of combustion products, products of incomplete combustion, hydrogen sulfide, and sulfur dioxide. The quantity of pollutants emitted varies with the capacity of the producing facility. Examples of oil and gas producing facilities are described in Sections 2.3 and 2.4, and their air emissions are given in Tables 3.3-1 and 3.4-1.

The environmental impacts of the air emissions can be estimated by computing the maximum concentration of the various pollutants for meteorological conditions that may exist at the area at various times through the use of mathematical diffusion models.

Waterborne Emissions

Potential sources of waterborne emissions include wastewaters, saltwater brines, blowouts, well stimulation, and sand production.

Wastewaters. Oil pumped from the reservoir is accompanied by some amount of water. The oil is passed through separation and treating facilities to remove this water. The present state of treating facilities is not 100% efficient, however, and small amounts of oil are entrained and dissolved in the wastewater discharged to the environment. The oil removal efficiency of the treating facilities is dependent on the percentage of water in the crude stream, the physical characteristics of the oil, and the oil throughput. Current Outer Continental Shelf (OCS) regulations permit an average of 50 ppm oil in discharged wastewaters.

Saltwater Brines. As oil production progresses and the oil fields begin to play out, considerable quantities of saltwater are produced along with the oil. The proper disposal of the saltwater is a major concern in the oil production industry because of its potential environmental effects on land and freshwater areas adjacent to oil wells. Saltwater may be permitted to be discharged in saline bays, estuaries, and offshore by state regulatory agencies. Sub-surface disposal, either for the purpose of improved oil recovery or for disposal only, has to meet stringent state regulations.

Blowouts. Blowouts occasionally occur in producing oil and gas wells. Liquid hydrocarbons and saltwater from these blowouts are the major contaminants to water bodies.

Well Stimulation. Well stimulation treatment is practiced in the United States to improve productivity. There are two methods used in stimulating a well, namely hydraulic fracturing and acidizing, which involves pumping acid into a carbonate or sand formation. The latter technique presents a potential pollution risk, since it involves pumping several hundred gallons of hydrochloric acid, organic acids or hydrofluoric acid into the producing formation. Upon completion of the treatment, the well is returned to production status and the spent acid, which is neutralized by saltwater, is separated from the crude oil and disposed of along with saltwater produced from the well.

Sand Production. Production of oil can be hindered by the influx of formation sand into the wellbore. All techniques of controlling sand influx require that all of the sand be cleaned from the wellbore after the well "stands up" and goes off production. Normally, the sand is oil saturated, thus it must be cleaned or in the case of offshore production, be transported ashore to save the offshore waters from a potential pollution risk.

Appendix 6-1

MAJOR WATER LAWS

Law of River Compacts

These compacts are generally made within a river basin agency and have a direct effect on the member states of that agency. The compacts exist to mediate the problems associated with allocation of interstate water and the administration of water rights. Because of these problems and existing or impending litigation, several affected States have entered into interstate compacts or requested court apportionment of the affected waters for the river systems.

The Federal Constitution provides that no State shall enter into any agreement or compact with another State, or with a foreign power, without the consent of Congress. Approval by Congress is required once the compact is ratified by the several States and usually provides for a Federal representative serving and reporting on the negotiations.

Upper Missouri River Basin

The interstate compacts which are applicable to the Fort Union region are the Belle Fourche River Compact and Yellowstone River Compact.

"The Belle Fourche River Compact between Wyoming and South Dakota was approved by the Act of February 26, 1944. Under this compact water right priorities theretofore established in one State were to be recognized in the other. Of the remaining unappropriated water, 90 percent is to be allocated to South Dakota and 10 percent to Wyoming. Diversions and impoundments of water in one State for use in the other State are authorized where State appropriation laws are observed.

The Yellowstone River Compact among Wyoming, Montana, and North Dakota was approved by the Act of October 30, 1951. It divides Yellowstone River Basin Surplus waters (1) in the Clarks Fork, 60 percent to Wyoming and 40 percent to Montana; (2) in the Big Horn River, 80 percent to Wyoming and 20 percent to Montana; (3) in the Tongue River, 40 percent to Wyoming and 60 percent to Montana; and (4) in the Powder River, 42 percent to Wyoming and 58 percent to Montana. The compact provides that the three signature States will not singly or jointly take actions which adversely affect Indian water rights to those waters of the Yellowstone River or its tributaties. Diversions and impoundments in one State for use in another State are authorized where State appropriation laws are observed. Diversions out of the Yellowstone Basin require the unanimous consent of all of the compacting States" (NO-055).

Upper and Lower Colorado River Basins

"The Colorado River is perhaps the most regulated river in the United States, and its utilization is such that very little usable water now discharges from its mouth into the Gulf of California. The cornerstone is the Colorado River Compact of 1922, which the seven Basin states negotiated pursuant to the Act of August 19, 1921 (42 Stat. 171). This Compact divides the Colorado River Basin into two parts; i.e., the Upper Basin and the Lower Basin, separated at a point on the river near the Utah/Arizona border known as Lee Ferry. Article III(a) apportions to each basin in perpetuity 7.5 m.a.f. of water per year. Article III(c) provides that any future Mexican water rights, recognized by the United States, are to be supplied as provided in the Compact. Article III(d) obligates the Upper Basin not to deplete the flow at Lee Ferry below an aggregate of 75 m.a.f. for any period of 10 consecutive years reckoned in continuing progressive series. In

1948 the Upper Basin States entered into a compact to divide the water of the Upper Basin, Article III(a) apportions among the States of Arizona, Colorado, New Mexico, Utah, and Wyoming the Colorado River Compact water:

(1) Arizona, 50,000 a.f.

(2) Colorado, New Mexico, Utah, and Wyoming, after deduction of Arizona's 50,000 acre-feet: Colorado, 51.75 percent, New Mexico, 11.25 percent, Utah, 23 percent, and Wyoming, 14 percent.

Article III(b)3 provides that no state shall exceed its apportioned use in any year when such use deprives another state of its water during that year. Curtailment in use of water apportioned is to be determined by the Commission. The Commission is to determine and allocate losses of water as a result of reservoir storage. The Upper Colorado River Commission is created as an interstate administrative agency and its duties are defined by Article VIII of the Compact. The Compact is not to interfere with the right or power of any state to regulate within its boundaries the appropriation, use, and control of water apportioned to such state. The failure of any state to use water shall not constitute a relinquishment or a forfeiture of the right to use that water. Article XIX provides that the obligation of the United States to the Indian tribes, the Mexican Treaty or any rights of the United States to acquire waters in the Upper Colorado River System are not to be affected" (US-168).

State Water Laws

In all parts of the country, water laws are largely based on the Riparian Doctrine, the Appropriation Doctrine, or a combination of both. A riparian right to withdraw water is based on the ownership of land next to a surface-water body.

The right is independent of the use or non-use of the water. An appropriation right is based upon the beneficial use of the water. In other words, the first to appropriate and use the water has a priority over others who come along and appropriate at a later time. An appropriation right is independent of the location of the land with respect to the water.

Figure A-1 shows that all states roughly east of the 95th meridian follow the Riparian Doctrine exclusively, with the exception of Mississippi and Florida. This eastern half of the country coincides with the area of water surplus shown on Figure 6.1.1. In this humid region, the Riparian Doctrine requires a land owner to allow the stream to flow by or through his land in its natural state. Thus, in its strict sense, the right does not allow for the consumptive use of the water except for small domestic needs. When irrigation becomes necessary in a riparian state, the courts modify the doctrine to allow reasonable use in relation to neighboring users. No riparian user can take all the water of a stream and allow none to flow down to his neighbor. This contrasts sharply with the appropriator's right in other parts of the country to consume all that he needs. The Mountain States follow the Appropriation Doctrine exclusively; other states recognize both doctrines. In those states that recognize both, the relative importance of each doctrine varies considerably.

In addition to riparian and appropriation rights, there is a third kind of right based on need. Some examples of this type are Indian water rights, Federal Reserve rights, and, in some cases, municipal rights. These rights will be discussed later.

"In all states, water laws relating to ground waters generally are based on either the Riparian Doctrine or the Appropriation Doctrine. The Eastern States generally use the

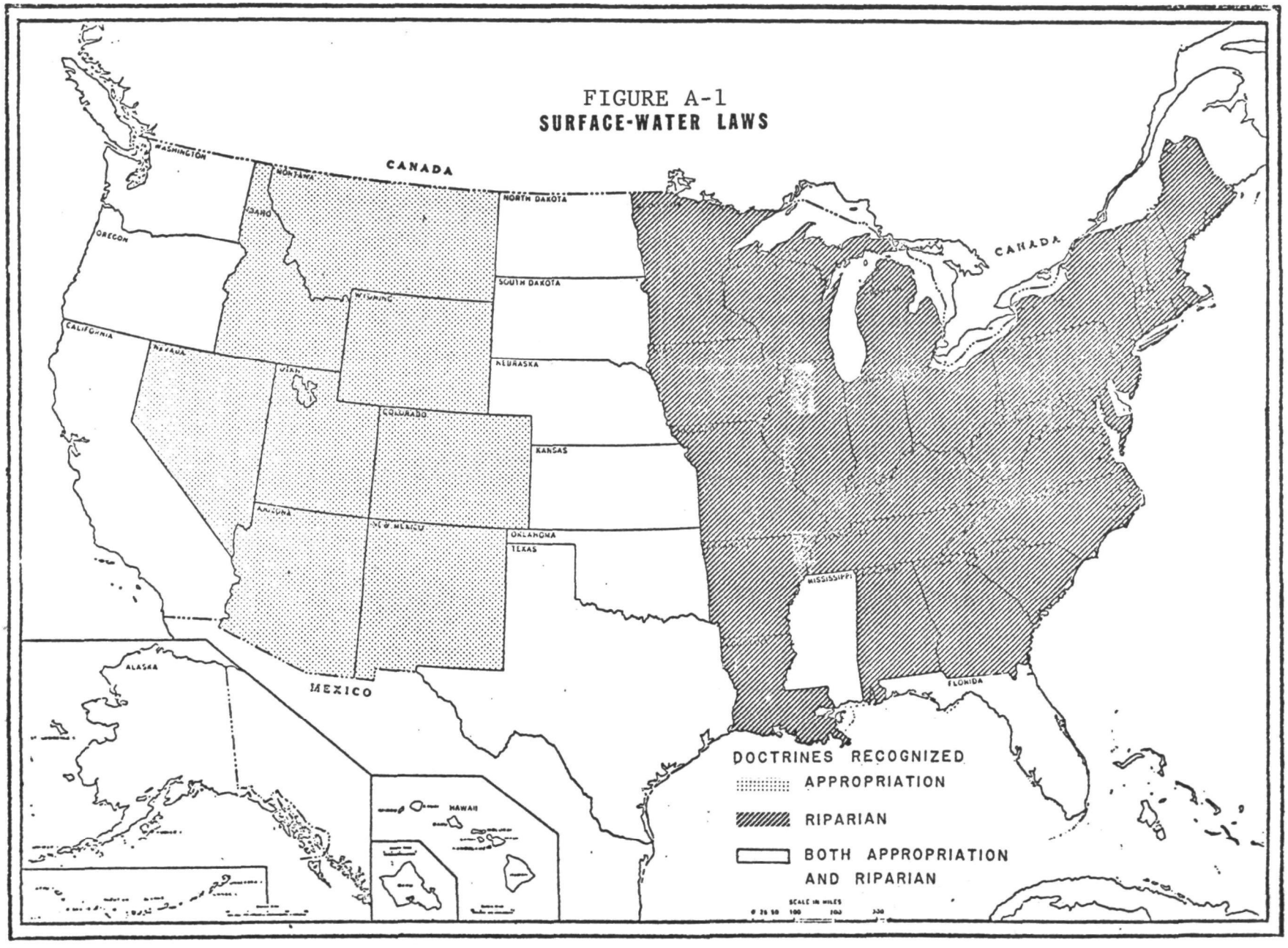

FIGURE A-1
SURFACE-WATER LAWS

English common-law version of the Riparian Doctrine, which gives absolute ownership of ground water to the land owner. Fifteen states modify this version and apply the American rule of 'reasonable use', which restricts the landowner's rights in relation to others. California goes one step further in the modification of the Riparian Doctrine with its doctrine of 'correlative rights'. Here, the landowner's use must not only be reasonable, but must be correlated with the uses of others during times of shortage. When the supply is limited, use is restricted to the lands directly overlying the common supply." The applicable ground water laws in the United States are shown on Figure A-2.

"While the Appropriation Doctrine seems to function easily for surface-water supplies in the arid states, it runs into some difficulty when it is applied to ground water. The main reason for this is that ground water is a hidden resource, whose occurrence and movement are poorly understood by most people.

Many states, in recent years, have begun to expand their control and regulation of ground-water use, and this has resulted in the creation of many special rules and regulations. Some of these apply to methods of well construction, monitoring of changes in ground-water levels and ground-water quality, periodic submission of data on ground-water use, and preventive measures to minimize contamination and pollution" (GE-058).

Federal Water Laws

The Federal Government was given limited powers relating to water resource development which are either expressly delegated or can be reasonably implied from the Constitution. There are a

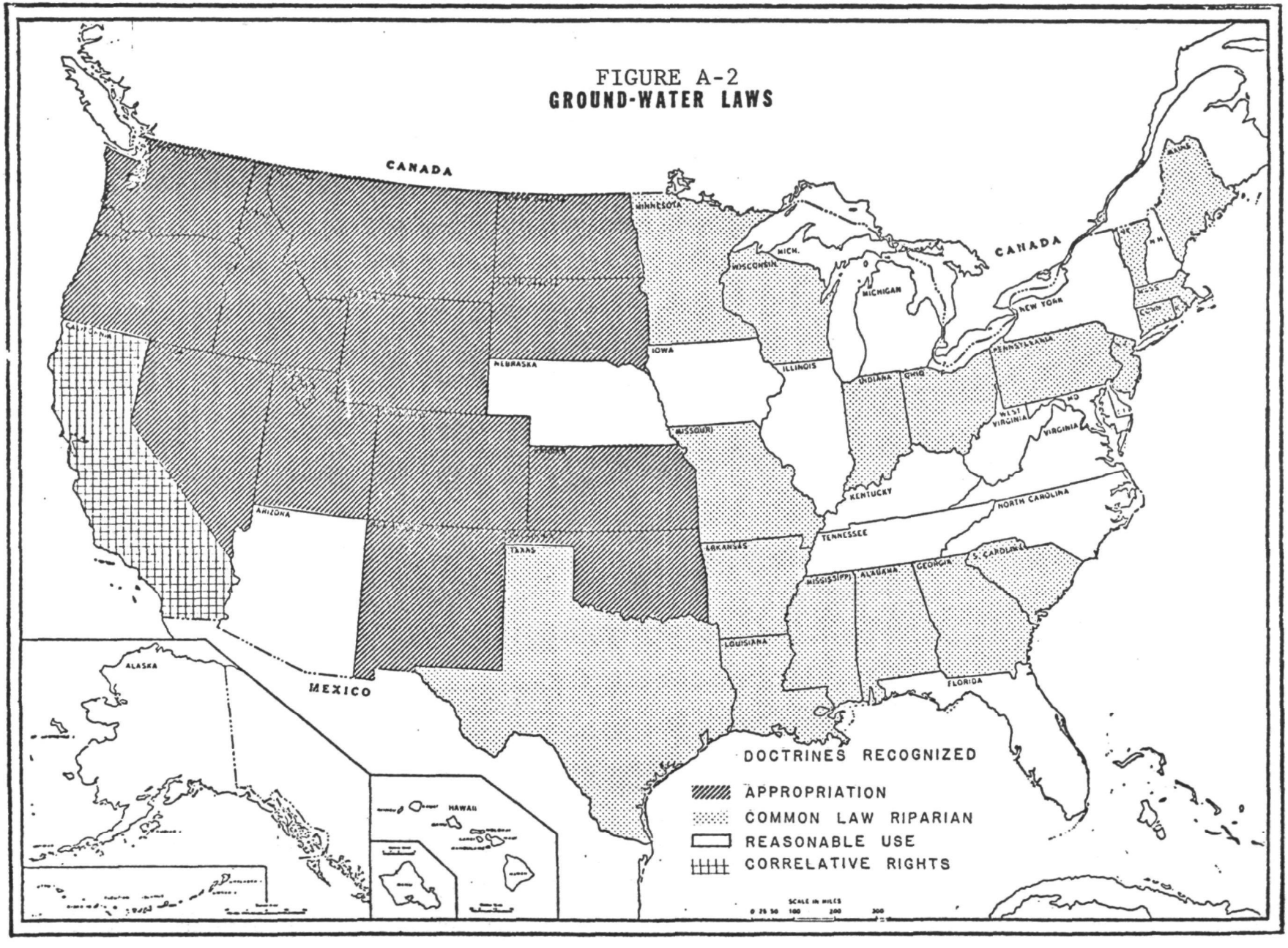

FIGURE A-2
GROUND-WATER LAWS

number of Federal laws that specifically effect the basins under consideration. Some of the more important laws are:

Indian Water Rights

Under a variety of treaties, acts, and executive orders enacted around the turn of the century, numerous Indian reservations were created in the central western states.

"Responsibility for the administration of Indian lands and waters on these reservations rests with the Bureau of Indian Affairs; however, the rights to the lands and water actually are vested with the Indians or tribes. The Indians of each reservation appear to have some legal claim to the use of the waters located on or flowing through or along its boundaries. Such rights are read from the treaties and agreements between the Indian tribes and the United States which have been approved by acts of Congress or formalized by Executive Orders. The Indian people claim a right to these waters free from State regulation and with a priority at least as early as the date the reservation was recognized or established. The Indian water right priority is not conditioned on use and may be exercised at any time. The Indian right can be quantified by fixing the amounts of water needed to serve the purpose or purposes for which the reservation was established. (See Winters v. United States, 207 U.S. 564 (1903); Conrad Investment Co. v. U.S. 161 Fed 829 (9th cir. 1908); U.S. v. Walker River Irrigation District 104 Fed 334 (9th cir. 1939); U.S. v. Ahtanum Irrigation District 235 Fed 321 (9th cir. 1956); and in closing, Arizona v. California 373; 546-600 (1963). Thus if the purpose were to promote an agricultural economy, as has been the case generally, the quantity of water reserved would be the amount needed to serve the practically irrigable acreage on the reservation. It also has been urged on behalf of the Indians that since the purpose of the Indian reservation is to

provide an economic base for the Indian people residing thereon, it must follow that the Indian water right is a right to use the available reservation waters for any beneficial use including irrigation, livestock, domestic, power, recreation, industrial and municipal purposes. Nevertheless, several State water administrators continue to urge that the Indians are entitled only to that water for which proper application under State procedures has been made.

"The irrigation of Indian lands was authorized by the General Allotment Act of February 8, 1887, which also provided that the Secretary of the Interior should make a just and equal distribution of the available water among the Indians. Later the Act of April 4, 1910, made specific provision for irrigation developments on Indian reservations, and special authorizations have been provided by Congress for many individual projects. The right to use Indian water for nonirrigation purposes has not been litigated or judically determined" (NO-055).

Mexican Water Treaty

"In the Mexican Water Treaty of 1944, Mexico is guaranteed an annual quantity of 1,500,000 a.f. of water from any and all sources. The water is to be delivered in the limitrophe section of the river near the international boundary" (NO-055).

Boulder Canyon Acts

The Boulder Canyon Project Act of December 21, 1928 approved the Colorado River compact of 1922 and provided for the construction of Hoover Dam and the All American Canal in the Lower Colorado Basin.

The Boulder Canyon Project Adjustment Act of July 19, 1940 (54 Stat. 774), among other things, provided funds for

planning for the use of water in the states of the Upper Colorado Basin.

Other Acts of Interest

An excellent review of other Federal laws that effect the central western energy states is found in the Water Work Group Report of the Northern Great Plains Resource Program, pgs 29-42 (NO-055). These laws are broken down into the basic areas of interest in water resource development, including:

(1) Irrigation,

(2) Power,

(3) Navigation,

(4) Municipal and Industrial Water Supply,

(5) Flood Control,

(6) Watershed Protection and Flood Prevention,

(7) Outdoor Recreation, Fish and Wildlife,

(8) Environment,

(9) Water Quality, and

(10) Planning.

More detailed discussions of legal water-use constraints are also available in several of the other references cited in the bibliography (US-168, NA-190, NA-176).

7.0 AREAS FOR RESEARCH AND DEVELOPMENT

The evaluation of the environmental aspects of the production and transportation of coal, oil shale, crude oil, and natural gas leads to the identification of several areas of research and development needs. These are itemized below.

Ambient Air Quality

The following areas of research are suggested relative to ambient measurement, the modelling of ambient concentrations, and the effects and fate of ambient pollutants.

- Fugitive particulate emissions, especially from strip-mined coal and oil shale mining, are potentially a significant problem but are presently inadequately quantified.

- Improved methods for quantifying emissions from both area sources and mobile sources are needed. This likely will require improved terrain-dependent models combined with real-time meteorological input, and an improved siting rationale for monitors.

- Automated particulate analyzers which can measure short-term particulate averages are needed. Some beta particle detectors of this type are being made available, however they are almost prohibitatively expensive as a replacement for Hi-Vol samplers. A possible approach to this problem might be to separate the collection and analysis parts, i.e., have one beta particle analyzer support many field collection devices.

- There is a real need for an automated field hydrocarbon monitor which will provide a detailed breakdown of the hydrocarbon species. This would provide an excellent clue to the sources, and thus greatly simplify the control of such emissions. Fugitive hydrocarbon emissions are a serious problem as has been discussed earlier. Given information on species and ratios between various species, along with compositions of the various process streams, "fingerprinting" techniques could be developed to greatly localize the source of fugitive emissions.

- Better methods of tracing pollutants in the atmosphere are needed. With a wide number of easily detectable tracers, the contributions of many local sources to the air quality in an area could be determined, and thus more easily allow optimum control strategies to be developed.

- An air monitoring rationale is needed. This is with regard to questions on how many monitoring stations should be used, how should they be sited, how they should be moved seasonally, and so forth. It is presently difficult to compare results from various networks due to different bases used in the original network design.

- There is a definite need for improvement in calibration systems and the long-term stability of calibration standards. In addition, the drift rates, mean time between failure, and temperature sensitivity of most automated instruments are subject to improvement.

- These needs are related to the need for better prediction from diffusion models. The data obtained in identifying sources with ambient concentrations is needed to "tune" sophisticated models, including terrain-dependent models. The "tuned" models in turn would be of great value in establishing air monitoring network designs.

- Additional data is also needed regarding the fate of pollutants in the environment, and their long term effects on plant and animal life. In particular, the effects of hydrocarbons and NO_x, separately and jointly, need to be better understood. If additional information could be obtained regarding the role of various hydrocarbon species or classes of hydrocarbon species in the formation of photochemical smog, more realistic ambient air hydrocarbon standards could be developed. This would allow the expenditures for controls to be channeled to the most effective areas.

Air Emissions

The following is a list of the areas which appear to need further research and development for the improvement of the control of certain emission sources within the industries of the modules described in Section 3.0.

- Diesel engine manufacturers have been engaged in research on the reduction of nitrogen oxides, hydrocarbons, and particulates from stationary and mobile diesel engines. Continuation and expansion of the following research and development programs appear useful in reducing emissions of

these pollutants : (1) development of inhibitors to NO_x formation that could be introduced into the combustion process through a fuel additive, (2) engine refinements such as derating engine output, variable compression ratio, valve and/or injection modification, and use of precombustion chambers and turbulence chambers, and (3) reduction of peak combustion temperature by means of introduction of an inert material such as exhaust gas or water.

- Reduction of NO_x emissions from stationary natural gas fueled engines could be accomplished with two-stage combustion. Further investigation into the use of the precombustion chamber which provides a type of two-stage combustion is needed. Also, more work is needed in improving the water injection systems for gas engines. Improved flue gas recirculation systems are needed.

- Examination of the application of combustion modification techniques which would be helpful in controlling NO_x emissions from coal-fired thermal dryers is needed.

- More study is needed on the cost-effectiveness of combustion modifications for process heaters. For the smaller size process heaters a technological breakthrough is required which would provide a novel type of combustion mechanism which will emit NO_x at lower levels. Application of fluid bed combustion of natural gas is one possibility that could be investigated.

- The emission of methane and dust from underground mining operations is an operating hazard. It is also an environmental problem for the mining industry. Ventilation is the current control method for these emissions. More reliable methods for control of these emissions are needed, however. Some areas of research could be (1) a series of investigations on the use of horizontal and vertical holes to remove methane from virgin coal and (2) the use of water infusion to block methane flow at active face areas. Both methods potentially would allow ventilation air rates to be reduced. Dust generated by these high air rates could accordingly be reduced.

- Currently there exists no technology for the removal of H_2S from gas systems at low pressure and with low H_2S concentrations such as those from the in-situ production of oil shale. A process is needed which can efficiently remove this dangerous component from such gas systems. These gas systems also contain low concentrations of hydrocarbons. Incinerating or venting such large volumes of low Btu gas (approximately 30 Btu/cu ft) is often uneconomical or undesirable environmentally. Some means of removing these hydrocarbons is needed.

Water Monitoring

There is a need for automated field analyzers to inspect all critical effluent parameters for these modules. Reliable automated analyzers would greatly reduce manpower requirements in collecting required data. Also needed are automated data acquisition systems to indicate trends in data, to indicate where regulations have been exceeded, and to provide summary reports of collected data.

Water Effluent Control

The provisions of the Clean Water Act will require zero discharge or zero impact of certain industrial facilities in future years. Development work is needed to determine the applicability of such technologies as ion exchange, membrane separation processes, and forced evaporation processes to effluent streams and in-process streams to obtain maximum and cost effective water reuse.

Solid Wastes

Large volumes of solid wastes are generated in coal and oil shale mining operations. The chemical composition of typical solid wastes should be examined in detail to determine the content of hazardous or potentially hazardous species. The solubility of these species should be determined, and the long-term chemical stability-solubility of these materials in a landfill environment should be studied, including backfill in mined areas.

The movement and attenuation of any soluble hazardous species in various types of soils should be examined. Also

the long-term stability in the landfill environment of liners for disposal sites should be examined.

Hazardous Chemicals

A comprehensive and cost effective sampling and analytical strategy is needed for gaseous, liquid, and solid effluents. The objective of this effort would be to provide a means of detecting potentially hazardous materials in these effluents. Field testing to verify these strategies will also be needed.

Cost Impacts

Studies are needed to indicate trends in plant costs as functions of increased emissions controls and improved fuel economy. Because of increasing energy costs, the trends in new plant designs are moving toward greater fuel utilization. This has the secondary effects of reducing total gaseous, liquid, and solid effluents and total cooling water requirements.

While energy conservation is in itself a desirable feature, concurrent cost savings can in some cases cover the expense of added control equipment. Engineering studies of these various cost alternatives are needed.

REFERENCES

AD-021 Advances in Pipelining. Proceedings, Session 10, 19th Canadian Chemical Engineering Conference, Edmonton, Alberta, October 1969, Ottawa, Ontario, Canadian Chemical Engineering Society.

AM-115 American Waterways Operators, Inc., Big Load Afloat. U.S. Domestic Water Transportation Resources, Washington, D.C. (1973).

AU-006 Aude, T. C., et al., "Slurry Piping Systems: Trends..." Chem. Eng. 15, 74-90 (1971).

AU-019 Aude, T. C., T. L. Thompson, and E. J. Wasp, "Economics of Slurry Pipeline Systems," Presented at the Hydrotransport 3, Colorado School of Mines, Golden, CO (May 1974).

BA-210 "Basic Technology," Chem. Eng. Deskbook Issue 27 April 1970, 165.

BA-224 Battelle-Columbus Laboratories, Topical Report on Energy Requirements for the Movement of Intercity Freight, Columbus, Ohio (1972).

BA-233 Bain, A. G. and S. T. Bonnington, The Hydraulic Transport of Solids by Pipeline, Internat'l. Series of Monographs in Mechanical Engineering, Vol. 5, Pergamon, NY (1970).

BA-234 Battelle-Columbus and Pacific Northwest Labs., Environmental Considerations in Future Energy Growth, Contract No. 68-01-0470, Columbus, OH (1973).

CH-182 Chilingar, George V. and Carrol M. Beeson, Surface Operations in Petroleum Production, NY, American Elsevier (1969).

CO-129 Council on Environmental Quality, Energy and the Environment; Electric Power, Washington, D.C. (1973).

CO-168 Coalgate, Jerry L., David J. Akers, and Russell W. Frum, Gob Pile Stabilization, Reclamation, Utilization, Interim Report for period: February 1972 - May 1973, Morgantown, West Virginia, Coal Research Bureau, School of Mines, West Virginia, University (1973).

CO-175 Colony Development Operation, Atlantic Richfield Co., Operator, An Environmental Impact Analysis for a Shale Oil Complex at Parachute Creek, Colorado, Vol. 1, Part 1 (1974).

REFERENCES (Cont.)

CO-197 Coal Pipeline Act of 1974, 93rd Congress, 2nd Session, Report No. 93-1072, Washington, D.C., GPO (1974).

CO-244 "Coal-Slurry Pipelines May Aid Energy Race," Chem. Eng. 81 (14) (1974).

DE-148 "Degasification of Coal Beds - A Commercial Source of Pipeline Gas," AGA Monthly 56 (1), 4 (1974).

DU-061 Durand, R.,"Basic Relationships of the Transportation of Solids in Pipes - Experimental Research," Proc. Minnesota International Hydraulic Convention 1953.

EN-071 Environmental Protection Agency, Compilation of Air Pollutant Emission Factors, 2nd ed. with supplements, AP-42, Research Triangle Park, NC (1973).

EN-096 Environmental Protection Agency, Processes, Procedures, and Methods to Control, EPA-430/9-73-011, EPA, Washington, D.C. (1973).

EN-204 Engineering-Sciences, Inc., Air Quality Assessment of the Oil Shale Development Program in the Piceance Creek Basin, McLean, VA (1974).

EN-219 Environmental Protection Agency, "State Standards for Acidity Alkalinity" (Issued August 1972), Env. Reporter, State Water Laws, Vol. 1 (1973).

EN-220 Environmental Protection Agency, Office of Air Quality Planning and Standards, Background Information for Standards of Performance: Coal Preparation Plants, 2 vols. - Vol. 1, Proposed Standards; Vol. 2, Summary of Test Data, EPA, Research Triangle Park, NC (1974).

FE-076 Federal Energy Administration, Project Independence Report, Washington, D.C. (1974).

FE-084 Federal Power Commission, National Gas Survey, 5 vols. Vol. 1, FPC Report; Vol. 2, Supply Task Force Reports; Vol. 3, Transmission Task Force Reports; Vol. 4, Distribution Task Force Reports; Vol. 5, Special Reports, Washington, D.C. (1973).

FR-121 Frick, Thomas C. and R. William Taylor, eds., Petroleum Production Handbook, 2 vols., McGraw-Hill, NY (1962).

REFERENCES (Cont.)

GA-104 Galland, J. M. and T. F. Edgar, Analysis and Modeling of Underground Coal Gasification Systems, Energy Systems Labs. Rept. ESL-13. Univ. of Texas, Dept. of Chemical Engineering, Austin, TX (1973).

GE-050 General Electric Co., Transportation Systems Div., Application of Diesel - Electric Locomotives, Erie, PA (1974).

GE-058 Geraghty, James J., et al., Water Atlas of the United States, Water Information Center, Port Washington, NY (1973).

GL-038 Glover, Thomas C., Unit Train Transportation of Coal: Technology and Description of Nine Representative Operations, BuMines, Washington, D.C. (1970).

GO-055 Govier, G. W. and K. Aziz, The Flow of Complex Mixtures in Pipes, Van Nostrand, NY (1972).

HA-246 Hale, Dean, "Artic Energy Holds Great Promise," Pipeline Gas J. 1974 (July).

HI-083 Hittman Associates, Inc., Environmental Impacts, Efficiency, and Cost of Energy Supplied by Emerging Technologies, Draft report on Task 5, low Btu gasification of coal and Task 6, high Btu gasification of coal, Columbia, MD (February 1974).

HI-097 Hill, Robert W., "Dust Control With Collectors on Continuous Miners," Mining Cong. J. 60 (7), 46 (1974).

HO-172 Holm, L. W., "Residual Oil-Can we Recover it Economically?" Petroleum Engr., 45 (13), 17 (1973).

HU-088 Huneke, John M., Statement to Committee on Interior and Insular Affairs, U.S. Senate on S.2652 (Title IV) ammendment, (11 June 1974).

IN-056 R. C. Barras, "Instrumentation for Monitoring Air Quality," ASTM Special Technical Publication 555 (1974).

KA-124 Katz, Donald L., et al., Evaluation of Coal Conversion Processes to Provide Clean Fuels, EPRI 206-0-0, Final Report, Univ. of Michigan, College of Engineering, Ann Arbor, Michigan (1974).

REFERENCES (Cont.)

KA-134 Katz, L., et al., "Transmission to Market," Handbook of Natural Gas Engineering, McGraw, NY (1959).

LO-084 "Longest Slurry Pipeline Passes Tests," Elec. World 15 February 1971.

MC-096 McNay, Lewis M., Coal Refuse Fires, An Environmental Hazard, BuMines, Washington, D.C. (1971).

MI-146 Million, Charles L., "Conoco Technology Curbs Production Pollution," Petroleum Engr, 45 (9), (1973).

MO-103 Montfort, J. G., "Black Mesa Coal Slurry Line is Economic and Technical Success," Pipeline Ind. 1972 (March).

MO-114 Morrison, Joseph N., Jr., "Controlling Dust Emissions at Belt Conveyor Transfer Points," Trans. Soc. Mining Engrs. AIME 250, 47 (1971).

MO-126 Montfort, J. G., "Black Mesa System Proves Coal Slurry Technology," Pipe Line Ind. 1974 (May).

MS-001 MSA Research Corporation, Hydrocarbon Pollutant Systems Study, Vol. 1, Stationary Sources, Effects, and Control, Evans City, PA (1972).

NA-004 National Air Pollution Control Techniques Advisory Committee, Control Techniques for Carbon Monoxide Emissions from Stationary Sources, NAPCA Pub. No. AP-65, (March 1970).

NA-005 National Air Pollution Control Techniques Advisory Committee, Control Techniques for Nitrogen Oxide Emissions from Stationary Sources, NAPCA Pub. No. AP-67 (March 1970).

NA-029 National Air Pollution Control Administration, Control Techniques for Particulate Air Pollutants, NAPCA Pub. No. AP-51 (January 1969).

NA-031 National Air Pollution Control Administration, Control Techniques for Carbon Monoxide, Nitrogen Oxide and Hydrocarbon Emissions from Mobile Sources, HEW, Public Health Service, NAPCA Pub. No. AP-66 (March 1970).

REFERENCES (Cont.)

NA-032 National Air Pollution Control Administration, Control Techniques for Hydrocarbon and Organic Solvent Emissions from Stationary Sources, Washington, D.C. (1970).

NA-113 J. S. Nader, "Development in Sampling and Analysis, Instrumentation for Stationary Sources," Journal of the Air Pollution Control Association, Vol. 23, No. 7, p. 587 (1973).

NA-176 National Petroleum Council, U. S. Energy Outlook, A Report of the National Petroleum Councils Committee on U. S. Energy Outlook, Washington, D.C., 1972.

NA-190 National Petroleum Council, U. S. Energy Outlook: Water Availability, Washington, D.C., 1973.

NG-002 "NG/SNG Handbook," Hydrocarbon Processing 50 (4), 93-122 (1971).

NI-036 Nielson, George F., ed., 1974 Keystone Coal Industry Manual, Mining Publications, McGraw-Hill, NY (1974).

NO-055 Northern Great Plains, Water Work Group, Report, U.S. Bureau of Reclamation, Helena, Montana (1974).

PE-097 Petroleum Extension Service, Univ. of Texas, and Pipeline Contractors Assoc., A Primer of Pipeline Construction. 2nd ed., Austin, TX (1966).

PE-098 Petroleum Extension Service, Univ. of Texas, Oil Pipeline Construction and Maintenance, Vol. 2, 2nd Ed., Series on Oil Pipeline Transportation Practicing, Austin, TX (1973).

PE-120 PEDCO-Environmental Specialists, Inc., Investigation of Fugitive Dust--Sources, Emissions and Control, Contract No. 68-02-0044, Task Order 9, Cincinnati, OH (1973).

PI-044 Pipeline Engineer International, Slurry Pipelines (1969).

PR-052 Process Research, Inc., Industrial Planning and Research, Screening Report, Crude Oil and Natural Gas Production Processes, Final Report, Contract No. 68-02-0242, Cincinnati, OH (1972).

REFERENCES (Cont.)

PR-075 Pratt and Whitney Aircraft, Aeronautical Vest-Pocket Handbook, 10th ed., 1964.

RA-119 Radian Corporation, A Program to Investigate Various Factors in Refinery Siting. Final Report, Austin, Tx., 1974.

RI-063 Rice, Richard A., "System Energy as a Factor in Considering Future Transportation," Presented at the ASME Winter Annual Mtg., NY (1970).

SC-194 Schmidt, R. A. and W. C. Stoneman, A Study of Surface Coal Mining in West Virginia, Final Report, SRI Project 1293, Stanford Research Inst., Menlo Park, CA (1972).

SK-024 Skelland, A. H. P., Non-Newtonian Flow and Heat Transfer, Wiley, NY (1967).

ST-166 Stefanko, Robert R. V. Ramani, and Michael R. Ferko, An Analysis of Strip Mining Methods and Equipment Selection, OCR R & D 61. Int. Rept. 7, Contract No. 14-01-0001-390, Pennsylvania State Univ., College of Earth and Mineral Sciences (1973).

ST-188 Steppanoff, Alexey J., Gravity Flow of Bulk Solids and Transportation of Solids in Suspension, Wiley, NY (1969).

ST-204 Stillwagon, R. E., "Economic Aspects of Electrically Driven Compressor Stations for Natural Gas Pipelines," Presented at the IEEE Pet. Chem. Ind. Conf., 20th Annual, Houston, TX, (September 1973).

TE-172 Temple, R. W. and R. N. DiNapoli, "Ethane and LPG Recovery in LNG Plants," Hydrocarbon Proc. 49(4), 89 (1970).

TR-024 "Traditional Hazards Bought at Gas Plants," Oil Week 15 November 1971, 36.

TR-049 TRW Systems Group, Underground Coal Mining in the United States, Research and Development Programs, (1970).

US-083 U.S. Dept. of the Interior, River of Life. Water: The Environmental Challenge, Conservation Yearbook No. 6, Washington, D.C. (197).

REFERENCES (Cont.)

US-093 U.S. Department of the Interior, Final Environmental Statement for the Prototype Oil Shale Leasing Program, 6 Vols., Washington, D.C. (1973).

US-124 U.S. Dept. of Commerce, Maritime Administration, Maritime Administration Tanker Construction Program, Final Environmental Impact Statement, Washington, D.C., EIS-AA-73-0725-F.

US-144 U.S. Bureau of Mines, Minerals Yearbook 1972, Vol. 1. Metals, Minerals and Fuels. Washington, D.C., 1974.

US-168 U.S. Dept. of the Interior, Water for Energy Management Team, Report on Water for Energy in the Upper Colorado River Basin (1974).

VA-093 Van Norman, Jerry L., "New Ideas Are Evolving in Compressor Station Piping Design," Pipeline Gas J. 1972 26 (November 1972).

WA-043 Wasp, Edward J., Terry L. Thompson, and T. C. Aude, "Initial Economic Evaluation of Slurry Pipeline Systems," Proc. ASCE, Transportation Eng. J. 97 (TE 2), 271-9 (1971).

WA-125 Wasp, E. J., et al., "Deposition Velocities, Transition Velocities, and Spatial Distribution of Solids in Slurry Pipelines," Presented at the First International Conf. on Hydraulic Transport of Solids in Pipes, Cranfield, Bedford, England (September 1970).

WA-126 Wasp, E. J., T. L. Thompson, and T. C. Aude, "Slurry Pipeline Economics and Application," Paper K3, Proceedings. First Internat'l. Conference on Hydraulic Transport of Solids in Pipes, September 1970, British Hydromechanics Research Assoc., Cranfield, Bedford, Eng. (1971).

WA-140 Wasp. E. J., T. L. Thompson, and T. C. Aude, "Pipeline Economics and Application," Presented at the 70th Nat'l. Mtg., AICHE, Atlantic City, NJ (1971).

WA-153 Wasp, E. J. and R. H. Derammelaere, "International Steam Coal: The New Energy Competitor," Presented at the Primer Seminario sobre la Utilizacion Integral del Carbon, Bogata, Colombia (March 1974).

REFERENCES (Cont.)

WE-134 "Wet In Situ Combustion Aids Recovery of Oil, AICHE Told," Oil Gas J. (3 April 1972).

WH-036 Whittle, T. C., Private Communication, General Electric Co., Transportation Systems Div. (11 September 1974).

ZA-044 Zabetakis, M. G., Methane Control in U.S. Coal Mines-An Overview, Pittsburgh Mining and Safety Research Center, Bureau of Mines, Pittsburgh, PA.

ZI-014 Zimmerman, R. E., "Economics of Coal Desulfurization," CEP 62 (10), 61 (1966).

CONVERSION FACTORS

The references used in developing this report generally stated flows, capacities, weights, etc. in English measurement units. The following table can be used to convert these measurements to metric units.

To Convert From	To	Multiply By
lb	kg	0.454
bbl	l	159.0
$lb/10^3$ bbl	$kg/10^3 l$	.002855
scf	Nm^3	0.0283
ton	MT	0.9072
gal	l	3.785
$lb/10^3$ gal	$kg/10^3 l$	0.1199
lb/ton	kg/MT	0.5004
Btu/bbl	kcal/l	1.585
ton	kg	907.2
Btu	kcal	0.252

TECHNICAL REPORT DATA
(Please read Instructions on the reverse before completing)

1. REPORT NO. EPA-600/2-76-064	2.	3. RECIPIENT'S ACCESSION NO.
4. TITLE AND SUBTITLE Atmospheric Pollution Potential from Fossil Fuel Resource Extraction, On-Site Processing, and Transportation		5. REPORT DATE March 1976
		6. PERFORMING ORGANIZATION CODE
7. AUTHOR(S) E. C. Cavanaugh, G. M. Clancy, J. D. Colley, P. S. Dzierlenga, V. M. Felix, D. C. Jones, and T. P. Nelson		8. PERFORMING ORGANIZATION REPORT NO.
9. PERFORMING ORGANIZATION NAME AND ADDRESS Radian Corporation P.O. Box 9948 Austin, Texas 78766		10. PROGRAM ELEMENT NO. 1AB013; ROAP 21ADD-042
		11. CONTRACT/GRANT NO. 68-02-1319, Task 19
12. SPONSORING AGENCY NAME AND ADDRESS EPA, Office of Research and Development Industrial Environmental Research Laboratory Research Triangle Park, NC 27711		13. TYPE OF REPORT AND PERIOD COVERED Task Final; 1-12/75
		14. SPONSORING AGENCY CODE EPA-ORD

15. SUPPLEMENTARY NOTES Project officer for this report is L. Lorenzi, Jr., Mail Drop 61, Ext 2851.

16. ABSTRACT The report describes the processes and operations employed for the production, on-site processing, and transportation of coal, oil, oil shale, and gas. Typical processing sequences are represented by modules. For each module, identification and quantification of potential atmospheric emissions is achieved through the use of existing information. A review of emission source monitoring methods, as well as a study of possible source control methods, is presented.

17. KEY WORDS AND DOCUMENT ANALYSIS

a. DESCRIPTORS	b. IDENTIFIERS/OPEN ENDED TERMS	c. COSATI Field/Group
Air Pollution	Air Pollution Control	13B
Fossil Fuels	Stationary Sources	21D,08G
Extraction	Resource Extraction	07A,13H
Processing		
Transportation		15E
Monitors		14B

18. DISTRIBUTION STATEMENT Unlimited	19. SECURITY CLASS (This Report) Unclassified	21. NO. OF PAGES 294
	20. SECURITY CLASS (This page) Unclassified	22. PRICE

EPA Form 2220-1 (9-73)