United States
Environmental Protection
Agency

Industrial Environmental Research
Laboratory
Research Triangle Park NC 27711

EPA-600/7-79-201
August 1979

EPA

Pollutants from Synthetic Fuels Production: Sampling and Analysis Methods for Coal Gasification

Interagency Energy/Environment R&D Program Report

RESEARCH REPORTING SERIES

Research reports of the Office of Research and Development, U.S. Environmental Protection Agency, have been grouped into nine series. These nine broad categories were established to facilitate further development and application of environmental technology. Elimination of traditional grouping was consciously planned to foster technology transfer and a maximum interface in related fields. The nine series are:

1. Environmental Health Effects Research
2. Environmental Protection Technology
3. Ecological Research
4. Environmental Monitoring
5. Socioeconomic Environmental Studies
6. Scientific and Technical Assessment Reports (STAR)
7. Interagency Energy-Environment Research and Development
8. "Special" Reports
9. Miscellaneous Reports

This report has been assigned to the INTERAGENCY ENERGY-ENVIRONMENT RESEARCH AND DEVELOPMENT series. Reports in this series result from the effort funded under the 17-agency Federal Energy/Environment Research and Development Program. These studies relate to EPA's mission to protect the public health and welfare from adverse effects of pollutants associated with energy systems. The goal of the Program is to assure the rapid development of domestic energy supplies in an environmentally-compatible manner by providing the necessary environmental data and control technology. Investigations include analyses of the transport of energy-related pollutants and their health and ecological effects; assessments of, and development of, control technologies for energy systems; and integrated assessments of a wide range of energy-related environmental issues.

EPA REVIEW NOTICE

This report has been reviewed by the participating Federal Agencies, and approved for publication. Approval does not signify that the contents necessarily reflect the views and policies of the Government, nor does mention of trade names or commercial products constitute endorsement or recommendation for use.

This document is available to the public through the National Technical Information Service, Springfield, Virginia 22161.

EPA-600/7-79-201

August 1979

Pollutants from Synthetic Fuels Production: Sampling and Analysis Methods for Coal Gasification

by

S. K. Gangwal, P. M. Grohse, D. E. Wagoner,
D. J. Minick, C. M. Sparacino, and R. A. Zweidinger

Research Triangle Institute
P. O. Box 12194
Research Triangle Park, North Carolina 27709

Grant No. R804979
Program Element No. EHE623A

EPA Project Officer: N. Dean Smith

Industrial Environmental Research Laboratory
Office of Energy, Minerals, and Industry
Research Triangle Park, NC 27711

Prepared for

U.S. ENVIRONMENTAL PROTECTION AGENCY
Office of Research and Development
Washington, DC 20460

ABSTRACT

A laboratory-scale coal gasification facility has been developed and is in use to study the generation, sampling, chemical analysis, process evaluation, and environmental assessment of pollutants from coal gasification operations. This report describes sampling and analysis methods pertaining to this coal gasification environmental study.

Collection and sampling techniques are described for particulates, organic condensibles and vapors or gases in the raw product stream of the gasifier as well as for solid residues.

Gas chromatography (GC) procedures are described for the measurement of fixed gases, C_1-C_5 hydrocarbons, sulfur gases and C_6-C_8 aromatics. Atomic absorption (AA) procedures for measurement of toxic trace elements include those for arsenic, selenium, lead, cadmium, chromium, and mercury.

Volatile organics are collected from the gas stream via polymeric sorbents (Tenax GC and XAD-2), and analyzed by glass capillary GC/mass spectrometry. The major nonvolatile byproduct (tar) is prefractionated by solvent partitioning into acid, base, and neutral fractions. Each fraction is analyzed by capillary GC/MS or high performance liquid chromatography (HPLC). Typical results are given to illustrate the nature of the compounds studied, the methodologies and the sensitivities of the methods.

TABLE OF CONTENTS

Section	Page
Abstract	ii
List of Figures	v
List of Tables	vi
Acknowledgements	viii
1.0 INTRODUCTION	1
2.0 CONCLUSIONS, PROBLEM AREAS AND PLANS	3
3.0 SAMPLING METHODS	5
3.1 SOLIDS AND PARTICULATES	5
3.2 LIQUIDS	5
3.3 GASES AND VAPORS	7
4.0 ANALYSIS OF GASES AND VAPORS	12
4.1 GAS CHROMATOGRAPHY (GC)	12
4.2 EVALUATION OF POLYMERIC SORBENTS AND GC/MS ANALYSIS	21
5.0 ANALYSIS OF LIQUIDS	37
5.1 SEPARATION OF TAR AND CONDENSATE	37
5.2 TAR PARTITIONING	38
5.3 GC/MS ANALYSIS	40
6.0 ATOMIC ABSORPTION METHODS	47
6.1 SAMPLE PREPARATION AND ANALYSIS	47
6.1.1 Coals and Residues	47
6.1.2 Tars	49
6.1.3 Aqueous Condensate and Scrubber Solutions	49
6.1.4 Sorbent Materials for Gaseous Effluents	49
6.2 QUALITY CONTROL PROCEDURES	49
6.3 TYPICAL RESULTS	49
7.0 FOURIER TRANSFORM INFRARED SPECTROMETRY	54
7.1 HIGH RESOLUTION ANALYSIS OF GAS SAMPLES	54
7.2 GC/FTIR ANALYSIS OF SEMIVOLATILES IN XAD-2 EXTRACT	57
7.3 LOW RESOLUTION FTIR OF COAL, ASH, AND TAR	59
8.0 SPECIAL TECHNIQUES FOR ANALYSIS OF TARS AND AQUEOUS CONDENSATES	65
8.1 PNA ANALYSIS USING GLASS CAPILLARY GAS CHROMATOGRAPHY $(GC)^2$	65
8.2 SIMULATED GLC DISTILLATION OF TAR	69
8.3 CLASS CHARACTERIZATION USING ELEMENT SPECIFIC DETECTORS	69
8.4 ION CHROMATOGRAPHIC ANALYSIS OF AQUEOUS SAMPLES	71

TABLE OF CONTENTS (continued).

Section		Page
References		72
Appendices		
I.	SELECTION AND PREPARATION OF POLYMERIC SORBENTS	I-1
II.	TENAX and XAD-2 ANALYSIS WITH GC/MS COMPUTER	II-1
III.	QUALITATIVE GC/MS RESULTS FOR ORGANIC VAPORS AND TAR FRACTIONS	III-1

LIST OF FIGURES

Number		Page
1	Samples collected during gasification of coal	6
2	Glass sampling system	8
3	Continuous analysis system for H_2, O_2, CO_2, CO, and CH_4 . .	10
4	Schematic of GC analysis system	13
5	Hydrocarbon analysis system	16
6	Comparison of dual and single flames modes for a coal gasifier product gas	19
7	Performance of Tenax GC cartridges at high hydrocarbon levels	24
8	Tar partitioning scheme	39
9	Range of selected trace elements in coals	51
10	Percent loss of effluents (Pittsburgh No.8 coal)	53
11	Chemigram of infrared bands (cm^{-1}) versus time during GC/FTIR analysis of extract of XAD-2 resin sampled during surge phase of run 41	58
12	Comparison of coal spectra. Top = Illinois No.6; Bottom = Zap lignite	61
13	Comparison of tar spectra. Top = Illinois No.6; Bottom = Zap lignite	62
14	Comparison of ash spectra. Top = Illinois No.6; Bottom = Zap lignite	63
15	PNA fraction of coal gasification tar by capillary GC-FID: Determination of selected PNA's	67
16	Analytical system for organic vapors in gas samples	II-2
17	Gas liquid chromatograph-mass spectrometer computer (GC/MS/COMP) layout	II-3

LIST OF TABLES

Number		Page
1	Conditions for GC Analysis	14
2	C_2-Hydrocarbons, C_6-C_8 Aromatics and Sulfur Species in Product Gas Stream from Semibatch Air-Steam Gasification of 4 x 8 mesh Illinois No.6 at 200 psia: ppm versus onstream time	18
3	Integrated Concentrations for Selected Compounds in the Gasifier Product Gas	20
4	Sample Stability Check	22
5	Performance Evaluation of XAD-2 Traps	25
6	Estimated Total Hydrocarbons Collected on XAD-2 Traps	26
7	Breakthrough on XAD Cartridges	27
8	Components of Standard	28
9	Evaluation of Recoveries from XAD-2 Cartridges	30
10	Recovery of Compounds from XAD-2 Resin with Evaporation of Solvent from 5 ml to 0.5 ml	31
11	Recovery of Compounds from XAD-2 Resin with Evaporation of Solvent from 195 ml to 5 ml	32
12	Average Percent Recoveries from XAD-2	33
13	Percent Deviation of Response Ratios from Ideality as a Function of Peak Width	33
14	Average of Deviations (%) of Response	34
15	Quantitative GC/MS Results for Selected Compounds on XAD-2 Resins	36
16	Elemental Analyses of Crude Tar	43
17	Typical Preliminary and Partition Results for Tar and Condensate	44
18	Quantitative Results for Selected Compounds in Tar Fractions	45
19	Quantitative Results for Phenols, Cresols, and Xylenols in Condensate by Reverse Phase HPLC and GC/MS	46
20	Average Material Balance for Three Illinois No.6 Coal Gasification Runs	50
21	High Resolution FTIR Analysis of Selected Gas Samples	56

LIST OF TABLES (continued).

Number		Page
24	Selected Compounds in PNA Fraction as Weight % of Coal Gasification Tar (MS vs. capillary-FID)	68
25	Conditions for Simulated GLC Distillation	70
26	Error in Boiling Points of PNA's as Predicted by the Procedure	70
27	Corrected Boiling Point Distribution for Tar Produced from Gasification of Illinois No.6 Coal (Run 52)	71
28	Operating Parameters for GLC/MS/Comp System	II-4
29	Operating Parameters for LKB 2091 GLC/MS/COMP System	II-7
30	GC/MS Analysis of Polynuclear Aromatics from Run 21	III-2
31	GC/MS Analysis of Nonpolar Neutrals from Run 21	III-3
32	GC/MS Analysis of Tar Bases from Run 21	III-4
33	GC/MS Analysis of Steady-State XAD-2 Extract from Run 21 . .	III-5
34	GC/MS Analysis of Surge XAD-2 Extract from Run 21	III-6
35	GC/MS Analysis of Glass Fiber Filter Extract from Run 21 . .	III-7
36	GC/MS Analysis of Tenax Sample Upstream of Steady-State XAD-2 Trap for Run 21	III-8
37	GC/MS Analysis of Tenax Sample Downstream of Steady-State XAD-2 Trap for Run 21	III-9

ACKNOWLEDGMENTS

The sampling and analysis procedures reported herein were developed and implemented for the project entitled "Pollutants from Synthetic Fuels Production" under sponsorship of the Fuel Process Branch, Industrial Environmental Research Laboratory, U.S. Environmental Protection Agency, Research Triangle Park, N. C. The guidance of Dr. N. Dean Smith, Project Officer, Mr. William J. Rhodes, Program Manager, and Mr. T. Kelly Janes, Branch Chief, are acknowledged.

The collaboration of David Green, John Cleland, Duane Nichols, and Forest Mixon of the Process Engineering Department at RTI have been central to the conduct of this project. Substantial contributions to analytical method development and execution have been provided by Jesse McDaniel, Steven Frazier, Kenneth Tomer, and Mitchell Erickson. Finally, the authors express thanks to Dr. Harold McNair, Professor of Chemistry at Virginia Polytechnic Institute and State University for his valuable suggestions regarding specific analytical techniques.

1.0 INTRODUCTION

The Research Triangle Institute (RTI), under sponsorship of the U.S. Environmental Protection Agency (EPA), has undertaken a research project to study pollution problems associated with synthetic fuels production processes. The project is currently in the third year of a five-year program. So far, the major thrust of the program has been the gasification of coal.

Nine U.S. coals have been gasified in a laboratory reactor and some 57 gasification runs have been completed. The reactor and the associated sampling system were designed, fabricated and put into operation during the first year of the program.[1] A versatile and flexible sampling system has resulted from a series of modifications which were made through experience gained from the earlier runs. This report describes the sampling and analysis methods for characterization of the gaseous, solid and liquid effluents from the laboratory coal gasification reactor.

The coal gasification reactor has been operated in a semibatch mode. A 1.5 kg batch of coal is dropped into the hot reactor through which steam and air are flowing at high temperature (~1000°C) and pressure (~200 psia). A surge condition prevails for a few minutes following the coal drop until conditions stabilize as volatiles are driven off due to pyrolysis. Char gasification then ensues. Provision has been made in the sampling approach to characterize the two periods as distinct from each other. Emphasis is placed on the analysis of trace organics, sulfur species, tars and aqueous effluents with the use of modern instrumental techniques.

Gas samples are collected in glass bulbs and analyzed by gas chromatography (GC). A variety of detectors including thermal conductivity (TC), flame ionization (FID) and flame photometric (FPD) are used for measurement of permanent gases, C_1-C_5 hydrocarbons, C_6-C_8 aromatics and sulfur gases. Volatile and semivolatile organics are collected on polymeric sorbents (Tenax-GC and XAD-2). Tenax-GC materials are then thermally desorbed onto a glass capillary GC/mass spectrometer (MS) system through a special interface.

XAD-2 resin is extracted using methylene chloride and the extract is analyzed by GC/MS. Standard atomic absorption (AA) procedures are used for measurement of toxic trace metals including As, Sb and Hg in coals and residue and additional AA procedures have been developed for analysis of Se, Cr, Pb, Ni, Cd and Cu in coals, residues and tars.

The major nonvolatile product is condensed tar which is separated from the aqueous condensate and solvent partitioned into acidic, basic and three neutral fractions. Each fraction is then analyzed by capillary GC/MS or high performance liquid chromatography (HPLC).

Several special techniques are under development for further characterization of the various effluents. These include Fourier transform infra-red spectroscopy (FTIR), GC-FTIR, glass capillary gas chromatography (GC^2), simulated GC distillation and ion chromatography. Details of the above procedures and typical results obtained are described in this report.

Related reports are simultaneously being prepared on other aspects of the screening test runs of the RTI nonisothermal pollutant generation facility. A report on the technical aspects of the runs presents operating conditions and test results; and, a second report deals with the health and environmental significance of the results. Separate reports are also planned on related topics. One is intended on the transient behavior of the gasification test runs relative to both reactor operation and the concentration of effluents. Another is to be a comparison of the results of this project with the available comparative data on pilot plant and commercial gasification operations.

Future reports will also present information relative to parametric studies, which examine the generation and control of potential pollutants in coal gasification under various selected operating conditions. The parameters under consideration are coal type, coal particle size, reactant flow rates, chemical additives, and other factors. Information being generated in this project is intended to provide a basis for the assessment of the potential health and environmental severity of the effluents from coal gasification processes and is intended for use in the reduction of such.

2.0 CONCLUSIONS, PROBLEM AREAS AND PLANS

A sampling and analysis protocol has been developed and applied for collection and measurement of solid, liquid and gaseous effluents from a laboratory coal gasifier. The type of samples collected include solid residues and particulates, tars and aqueous condensates, semivolatile and volatile organics and gaseous species. Analytical chemical measurements are made using a variety of techniques. These include ultimate and proximate analysis of coals, ash and tars; continuous analysis of primary gases; gas chromatographic analysis of gaseous pollutants including C_1-C_5 hydrocarbons, C_6-C_8 aromatics and sulfur species; atomic absorption analysis of solid and liquid samples for trace metals; sorption and analysis of volatile trace organics by GC/MS/computer techniques; and the collection, partition and analysis of aqueous condensate and semivolatile and nonvolatile tars using GC/MS and HPLC methods. Several special techniques have been developed or are under development. These include analysis of polynuclear aromatic species by glass capillary gas chromatography; Fourier transform infra-red analysis of gas, tar, coal and residue; simulated GC distillation of coal tars for measurement of boiling point distributions; and ion chromatographic analysis of cations and anions in aqueous condensates.

Certain problem areas which need further developmental work or alternative instrumental techniques have been identified. Of major concern is the characterization of sulfur, nitrogen and oxygen heterocyclic compounds in the tar. A study has been initiated using element specific detectors to characterize nitrogen and sulfur compounds by boiling points. Another area of importance is the characterization and speciation of trace metals in the gas phase. To date, only XAD-2 resins have been analyzed for this purpose. However, species like mercury vapor, methylmercury, arsine and hydrogen selenide are probably not being trapped by XAD-2. An effort is presently underway to confirm this by installing a backup activated charcoal trap

downstream of the XAD-2. Charcoal is known to trap species like arsine very efficiently.[2] Polynuclear aromatics analysis is another area which requires further work. This is especially true for five-to-seven ring compounds which do not yield to easy measurement by gas chromatographic techniques because of their high boiling points (>500°C). Yet they are known to be highly toxic and mutagenic. An alternative approach involving high performance liquid chromatography coupled to a spectrofluorometer will be evaluated. This technique is especially useful for ultra-trace level PNA's of the order of picograms. Another area of concern is the spillover of PNA's onto the other tar fractions. Tar bases have been shown to be even more mutagenic than the PNA fractions.[3] It is felt that PNA spillover may be partly responsible for this. This is being further investigated. A relatively simple procedure is to inject a dilute tar sample directly onto a capillary GC-FID and determine selected PNA's based on retention times. Then by subtraction of the PNA's in the PNA fraction the degree of spillover can be estimated.

Future plans include continuation of the application of the sampling and analysis protocol to coal gasification and other synthetic fuel-related samples. Modifications and improvements will be made as needed to improve analytical efficiency and reduce analysis uncertainties. Quality control procedures have been in use all through the project. During parametric tests and modeling studies, however, there will be a need for making rigorous quality control checks on the data. Also degrees of accuracy and precision need to be better defined so that the confidence levels of results can be ascertained for future test runs.

3.0 SAMPLING METHODS

A versatile and flexible system is in use to sample various effluents from the coal gasification reactor.[1] This sampling system removes particulates, tars and aqueous condensates, semivolatile organic material, volatile organics and fixed gases. A simplified schematic of the various samples that are collected is shown in Figure 1. All liquid and solid samples, unless otherwise stated, are stored in a freezer in glass bottles with tight teflon caps and Parafilm[R] seals for further analysis.

3.1 SOLIDS AND PARTICULATES

As shown in Figure 1, these samples are of three types: feed coal, reactor residue, and particulates. Approximately 50-100 g of a representative sample of the feed coal and a like amount of the residue following the run are collected. Portions of these samples are sent to commercial laboratories for ultimate and proximate analyses by standard ASTM procedures. The product gases that emerge from the reactor immediately enter in a particulate trap.[1] This trap contains a stainless steel braided cup which functions as a flow impinger. The trap is further packed with glass wool as a medium to facilitate the removal of solid particles from the hot gas stream and is insulated and heated to prevent tar condensation. Any finer particles which are not captured in this trap are further removed in the condenser and through the use of glass fiber filters that will be described in Sections 3.2 and 3.3. Following the run, the glass wool is carefully removed and refrigerated, pending solvent extraction and analysis.

3.2 LIQUIDS

The gases leaving the particulate trap enter a condenser[1] with an outer jacket through which liquid freon is circulated for removal of tar and aqueous condensate. This trap may be tapped periodically during a run for

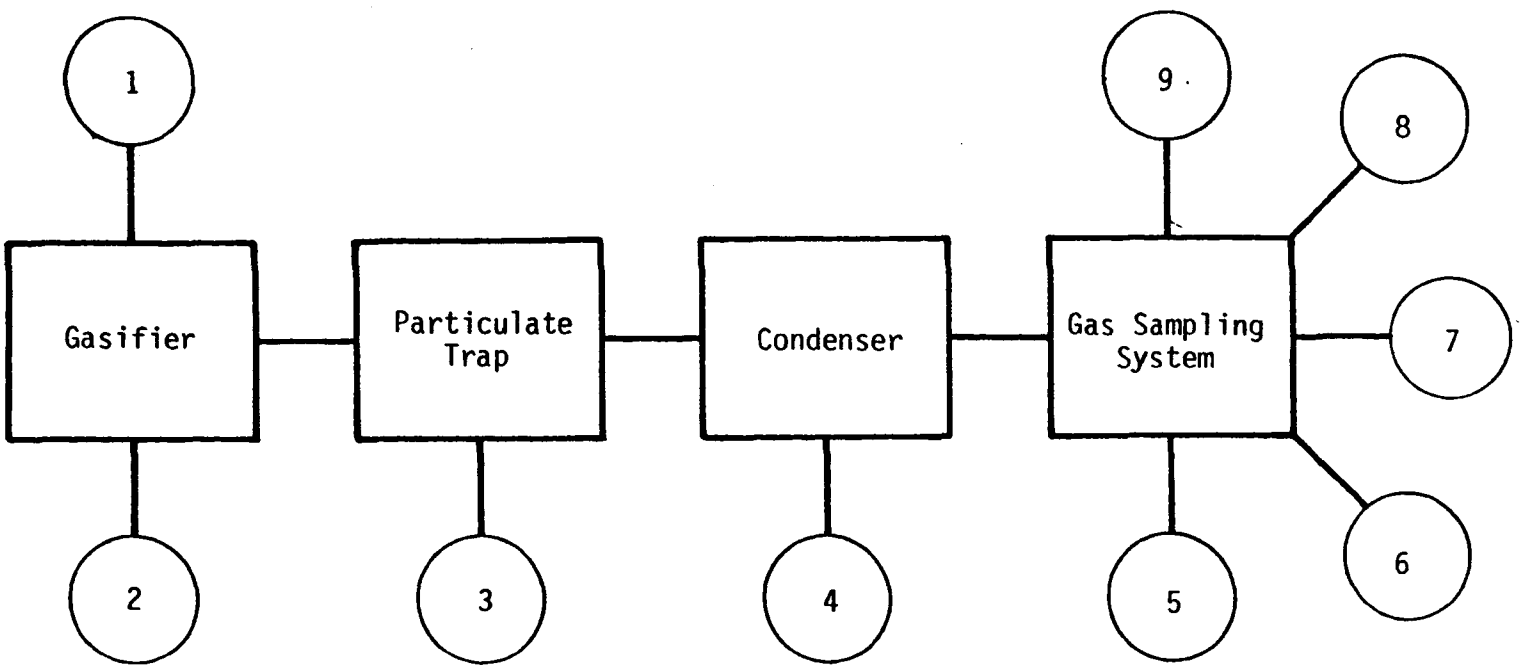

1. Coal
2. Residue
3. Particulates
4. Tar, Water and Insolubles
5. Entrained Tar and Water
6. Gas Bulbs
7. Polymeric Sorbents
8. Glass Fiber Filter
9. Scrubber Solutions

Figure 1. Samples collected during gasification of coal.

removal of the accumulated material or at the end of the run for total collected material. The tar and condensate are separated and the tar is subdivided into several fractions. An elaborate sample preparation technique, described in Section 5.1, is used to facilitate partitioning into different sample classes including aqueous condensate, tar acids, tar bases, nonpolar neutrals, polar neutrals, and polynuclear aromatics. Solids and particulates which are insoluble in the neutrals partitioning solvent (cyclohexane) are also collected. Required quantities of each sample are stored in the freezer and the rest are disposed of using adequate waste disposal methods.

3.3 GASES AND VAPORS

The gases leave the condenser and at this point the reactor pressure is reduced through a backpressure regulator. The gases then enter a glass sampling system shown in Figure 2. Entrained moisture in the gases is further removed at this point so that its interference with the subsequent sampling of gases and vapors is reduced. Special emphasis is placed on the sampling strategy to account for the surge and steady-state conditions characteristic of the semibatch operation. When a batch of coal is fed to the hot reactor, a surge condition prevails during which most of the pyrolytic products are released. Typically the surge period lasts for about 15-30 minutes, during which a dramatic change in concentration of the pollutant occurs, which could be as much as three orders of magnitude. Gaseous grab samples are taken at a high frequency (every 1 to 2 minutes) during the surge condition to efficiently characterize the concentration changes. The steady-state condition is marked by a drop in the methane concentration to a relatively stable value of about 2 percent. At this point, gas samples are collected with a time interval of about 10 minutes or greater. The glass containers used to collect these gas samples are 500 ml in volume and are equipped with two high vacuum teflon stopcocks. Approximately 3-5 liters of gas is passed through them prior to closing the stopcocks. Samples are kept stored in a heated box at about 50°C. Stability of gas samples and the GC analysis of these samples are described in Section 4.1.

In addition to direct collection of gases in glass containers, organic vapors are adsorbed on polymeric sorbents. Tenax-GC and Amberlite XAD-2 are used for the gas analyses. The sorbents are packed into two types of containers:

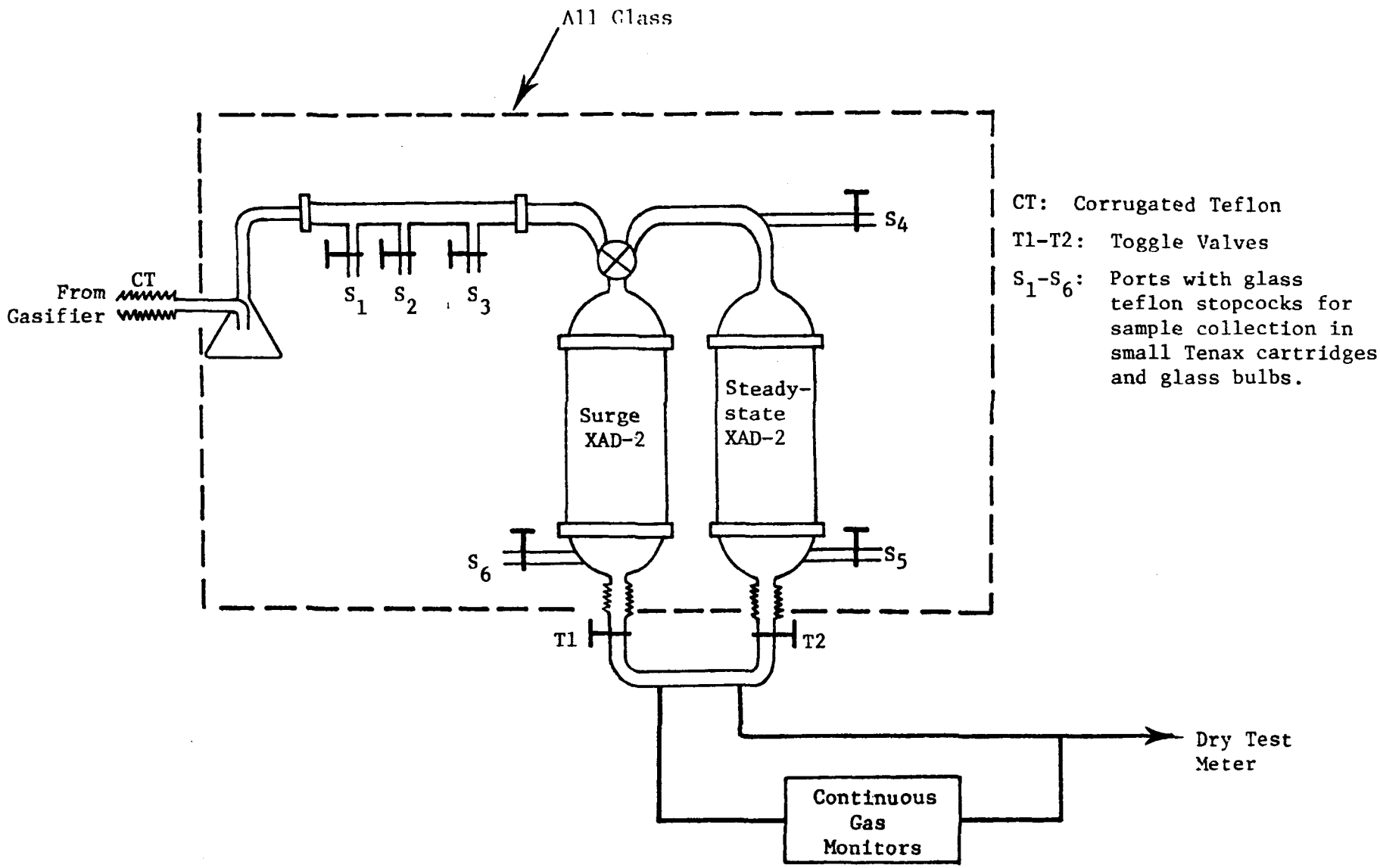

Figure 2. Glass sampling system.

large in-line traps, and small cartridges. The in-line traps are cylindrical tubes with an internal volume of approximately 1 liter. One end contains a fritted glass disc to retain the sorbent. Approximately 150-200 g of cleaned XAD-2 (see Appendix I) is packed in each trap. This is followed by a layer of glass wool, a stainless steel screen and a glass fiber filter (Gelman type A). End adapters are clamped to each end of each cylinder and sealed with Viton o-rings. In order to distinguish between the surge and the steady-state conditions the two traps are used in parallel, connected by a three-way teflon stopcock. This affects the switchover from one condition to another. Approximately 1000 and 3000 standard liters of gas are produced during the surge and steady-state conditions respectively. In addition to the in-line traps, samples are collected in small cartridges (1.5 cm I.D. x 10 cm long). These are filled with sorbent (either XAD-2 or Tenax-GC) to a length of 6 cm with glass wool at both ends. They are interfaced to the sampling system both upstream and downstream of the large XAD-2 traps by means of teflon stopcocks and fittings. When Tenax is used, only 100-150 cm^3 of sample is necessary because of its lower surface area (30 m^2/g). When XAD-2 (300 m^2/g) is used in these cartridges, 5-15 liters of sample are required. Efficiency of XAD-2 has been evaluated using Tenax cartridges upstream and downstream of the large in-line traps. In addition for selected runs, two XAD-2 or Tenax cartridges have been used in tandem both during the surge and steady-state periods to determine breakthrough and displacement.

In addition to the collection of gases in bulbs and sorbents, a 1N H_2SO_4 impinger is used in series with the glass sampling system for measurement of ammonia. Evaluation of the accuracy of the GC/MS analysis of samples collected on the sorbents are described in Section 4.2.

To ensure successful operation of the gasifier and to detect gross system malfunctions, it is necessary to monitor the major product gases (H_2, CO_2, CO, and CH_4) continuously. In addition, it is necessary to monitor oxygen in the product gas which should be absent under normal operation. However as the coal batch is gasified, a stage is reached when oxygen breakthrough occurs indicating the completion of the run. An elaborate system has been connected in parallel to the glass sampling system for continuous analysis of H_2, CO_2, CO, CH_4, and O_2 (Figure 3). A sample conditioner removes traces

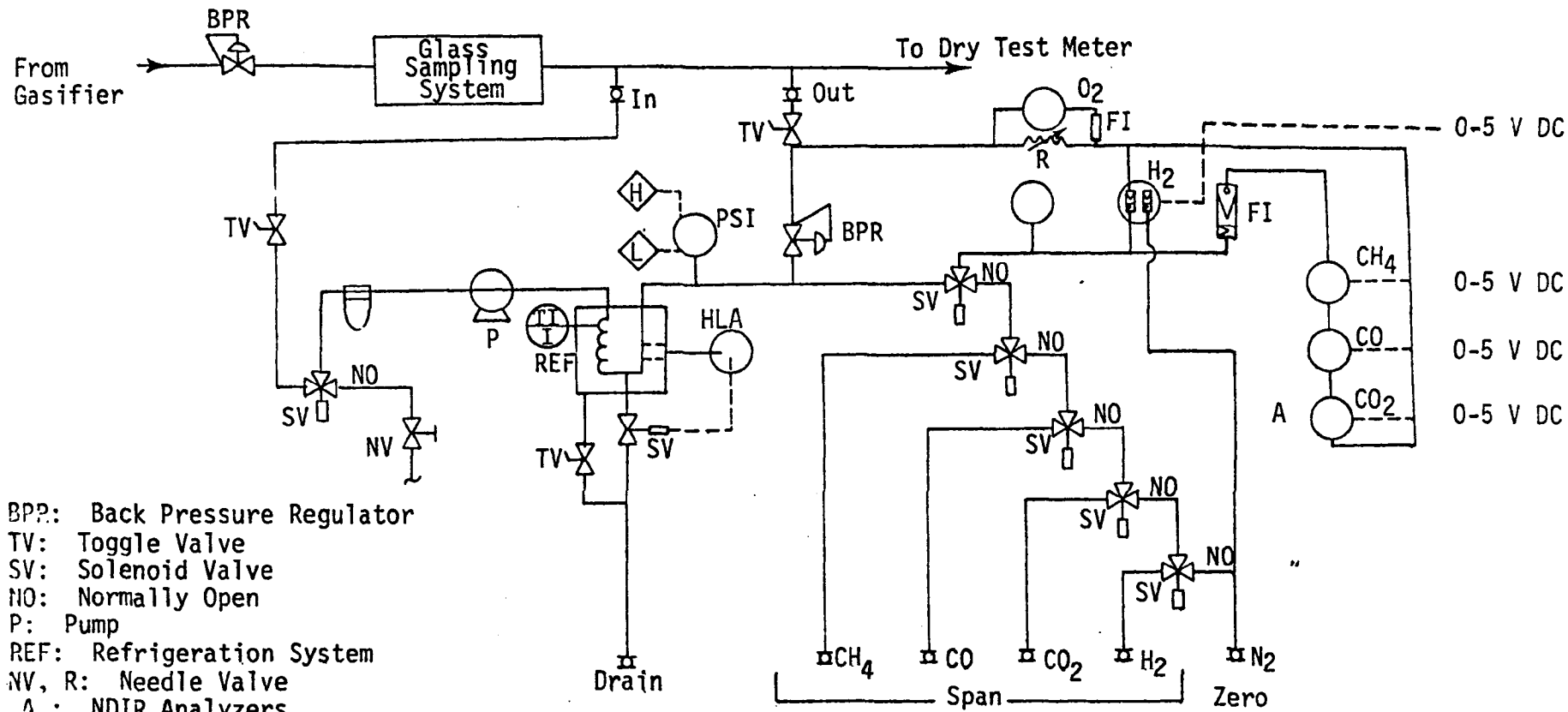

Figure 3. Continuous analysis system for H_2, O_2, CO, CO_2 and CH_4.

of condensibles from the gases via refrigeration (~1°C) prior to their entering the continuous analyzers. CH_4, CO and CO_2 are measured using non-dispersive infrared analyzers, H_2 using a thermal conductivity analyzer and O_2 using a paramagnetic analyzer. Pressure and flow in the system are controlled using a backpressure regulator and several rotameters. The analyzers are zeroed and spanned prior to the run with known concentrations using a series of solenoid switch valves. Following analysis, the gases are routed back to the glass sampling system and mixed with the bulk gases for total volumetric flow measurement using a dry test meter.

4.0 ANALYSIS OF GASES AND VAPORS

Collection of gaseous and vapor effluents from the coal gasifier was described in Section 3.3. Further preparation of the samples and analysis of selected species is carried out using gas chromatography (GC) and gas chromatography coupled to mass spectrometry (GC/MS). GC is mainly used for measurement of major gases and volatile pollutants which are directly analyzable from the glass bulbs. On the other hand, GC/MS is used for the analysis of trace organics collected on polymeric sorbents and glass fiber filters.

4.1 GAS CHROMATOGRAPHY (GC)

A simple schematic of the GC analysis system is shown in Figure 4. As stated earlier, the glass bulbs are stored in a heated box at 50°C. The analysis is carried out without removal of the bulbs from the box by means of a vacuum sample removal system. The system hardware is essentially similar to the one described by Gangwal and Wagoner[4] for measurement of sulfur compounds using a dual flame photometric detector (FPD) coupled to a GC. It consists of a Sargent-Welch vacuum pump for evacuating the sample loops (1 ml) to less than 1 mm of Hg absolute pressure, a Heise vacuum-pressure gauge (0-3450 mm) with 2 mm graduations for measurement of sample loop pressure prior to injection and three heated zero volume valves for injection of the sample onto the GC columns. Table 1 shows the various compounds that are analyzed and the type of detector, column and conditions that are used.

The sample injection and analysis procedure for each detector consists of the following. The sample loop (1 ml) and associated valving and tubings are first evacuated using the vacuum pump (Figure 4). A small amount of sample is then used to flush the loop and the system is reevaluated. The sample is then introduced into the loop and the absolute pressure is carefully measured using the vacuum-gauge. Approximately 300-400 mmHg of sample pressure is used. Using the zero volume valve, the sample is then injected onto the GC.

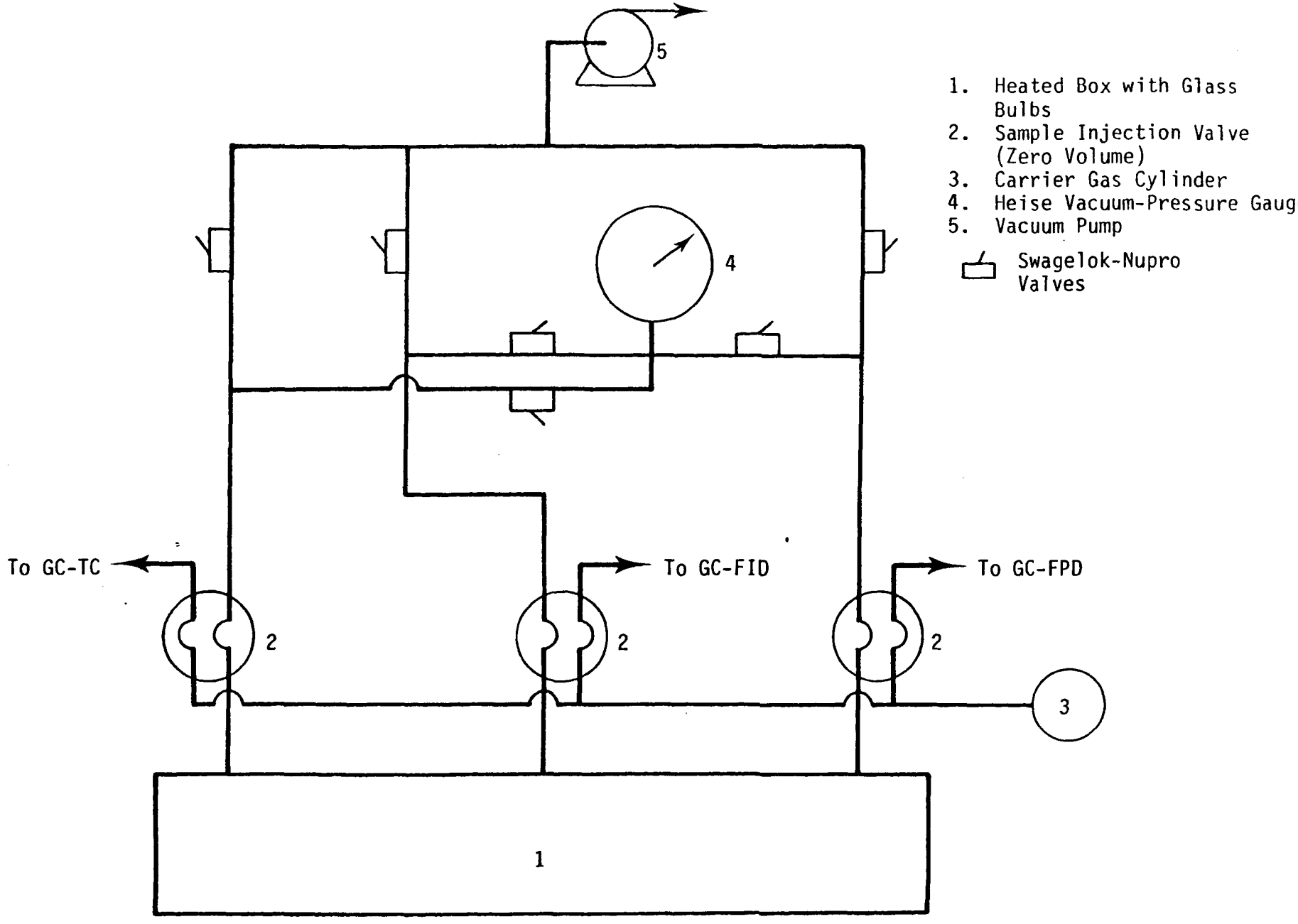

Figure 4. Schematic of GC analysis system.

TABLE 1. CONDITIONS FOR GC ANALYSIS

Detector	TC	FID	FPD
Compounds Analyzed	H_2, CO_2, CO, N_2, O_2 CH_4, C_2H_6, C_2H_4 H_2S, COS (>100 ppm)	(a) C_1-C_5 hydrocarbons (b) C_6H_6, C_7H_8, C_8H_{10}	COS, CH_3SH, C_2H_5SH $(CH_3)_2S$, CS_2, thiophene
Column and Oven Temperature	6' x 1/8" SS Porapak N 7' x 1/8" SS Molecular Sieve 13X 70°C	(a) 6' x 1/8" Durapak phenylisocyanate (18°C) (b) 8' x 1/8" TRIS-1,2,3 cyano ethoxypropane (90°C)	6' x 1/8" Teflon Carbopack B/XE60/H_3PO_4 50°C for 2 min to 130°C at 32°C/min
Carrier Gas Flow (ml/min)	30	20	30
Detector Temperature (°C)	200	150	150
Sample Loop Material and Size	SS 1 ml	SS 1 ml	Teflon 1 ml
Injection Valve Material	SS	SS	Hastalloy-C

Standards of known concentration are also analyzed in a similar fashion. Peak areas of the various components in the sample and standard are measured using a A/D converter coupled to a computer with a GC-software system. Concentration of the components of interest are determined in the sampling using equation (1).

$$C_u = C \frac{Av}{As} \frac{Ps}{Pu} \qquad (1)$$

where: subscript u refers to the sample and S to the standard and C, A, and P are concentrations, peak areas and loop pressures, respectively.

Equation (1) is only applicable to the TC and FID. The FPD is nonlinear and a log-log calibration curve of area versus concentration for each sulfur species is prepared by varying the sample loop pressure.[4] These curves are then used for quantitation of the sulfur compounds. Periodically, calibration curves are also prepared for the TC and the FID using varying sample loop pressures in order to confirm their linear range.

The analysis of fixed gases, C_1-C_2 hydrocarbons and H_2S using the thermal conductivity detector has been described in detail by Gangwal, et al.[5] Recently, a further improvement in the system allows analysis of COS in addition to the above gases.[6] This is especially helpful when H_2S and COS are present in relatively large concentrations (>200 ppm). At these concentrations, the sulfur specific FPD is saturated because the amount of sulfur injected falls outside the dynamic range for 1 ml samples.

The flame ionization detector can be used either for the analysis of C_6-C_8 aromatics or C_1-C_5 hydrocarbons using two columns in parallel. Backflush valves are incorporated into the system to reverse the carrier gas flow through the column. The schematic is shown in Figure 5. This is necessary to prevent the interference of the heavier materials with analysis of subsequent samples.

The flame photometric detector (FPD) is used for the analysis of COS (<200 ppm), CH_3SH, C_2H_5SH, $(CH_3)_2S$, CS_2 and thiophene. The FPD uses two flames instead of one used in the conventional Brodey and Chaney[7] design.

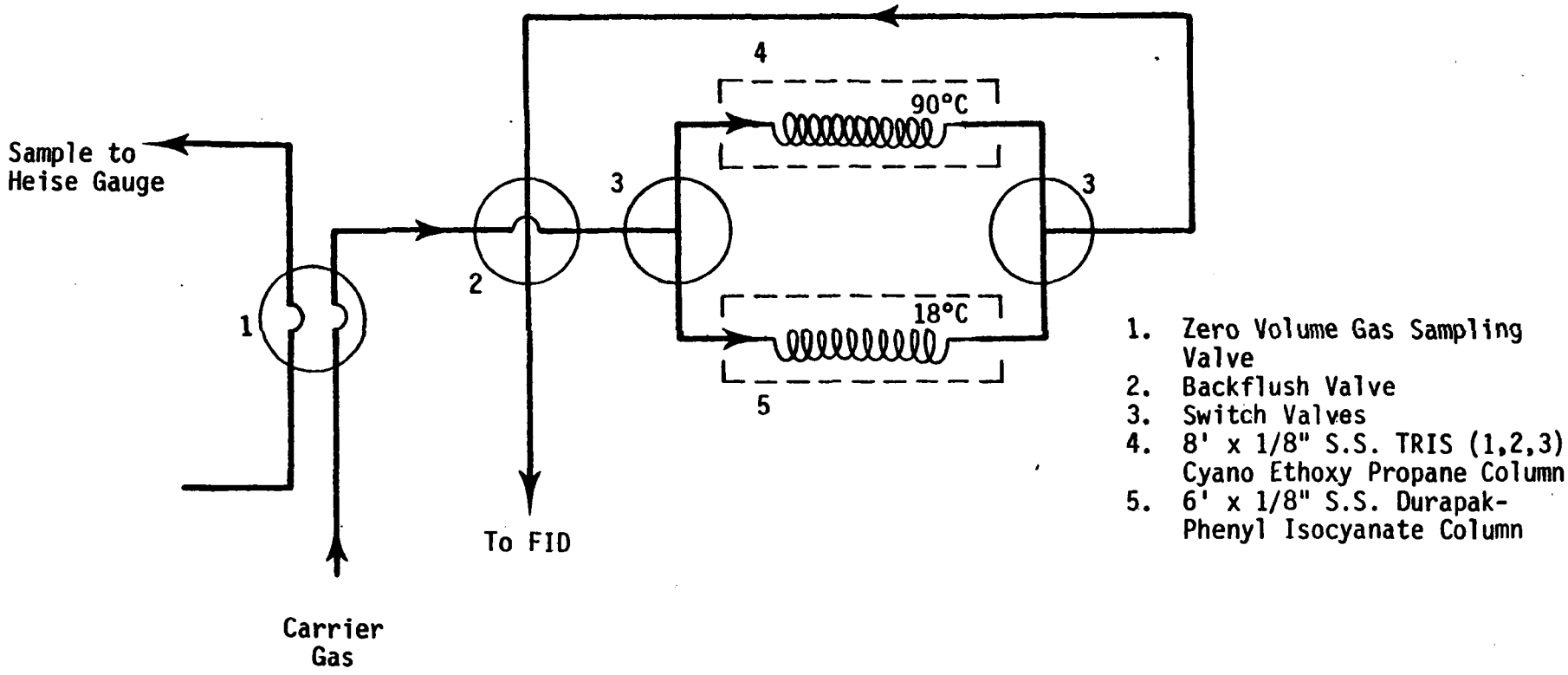

Figure 5. Hydrocarbon analysis system.

Details of the design have been described by Patterson, et al.[8] The quenching of the response to sulfur compounds in the presence of a hydrocarbon matrix eluting simultaneously is a problem common to all FPD designs. This results in inaccurate measurements. The dual flame design minimizes this problem by breaking down the complex matrix to simpler compounds in the first flame and measuring the optical emissions in the second flame. This characteristic of the dual flame FPD is demonstrated in Figure 6. In the single flame mode, no CS_2 response is seen even though a larger thiophene response is obtained for the same amount of sample. The FID under the same conditions indicates a larger background of hydrocarbons at the point of CS_2 elution and a smaller background at the point of thiophene elution. In addition, the dual flame FPD has been found to be much more reproducible than the single flame FPD. As much as a 75 percent different response has been observed for the same sample analyzed consecutively on the single flame FPD. This, in our opinion, is due to hydrocarbons, still eluting from the previous sample and interfering with the response of the next sample.

Typical data obtained for various species during gasification run 52 are shown in Table 2. The pyrolytic products, e.g., hydrocarbons, mercaptans and thiophene are reduced to very low levels after only 15-30 minutes into the run. In contrast, the gasification products, H_2S, COS, prevail until the very end of the run (i.e., until oxygen breakthrough). The results in Table 2 become more meaningful when the data are integrated over the duration of the run. Pollutants produced can then be expressed in $\mu g/m^3$ of gas. For three runs carried out with Wyoming, North Dakota and Illinois No.6 coals, integrated values are presented in Table 3.

A few words are needed here as to the quality control procedures used to ensure the integrity of the data generated. Since various types of analyses are carried out on the same bulb, a partial vacuum is created in the bulb which increases following each analysis. For this reason, the bulbs are equipped with special high-vacuum glass teflon stopcocks capable of holding the vacuum down to 1 mm Hg for several days. In addition, since it is not possible to complete the analysis of all bulbs immediately following

TABLE 2. C_2-HYDROCARBONS, C_6-C_8 AROMATICS AND SULFUR SPECIES IN PRODUCT GAS FROM SEMIBATCH AIR-STEAM GASIFICATION OF 4 x 8 MESH ILLINOIS No.6 AT 200 psia: ppm versus onstream time

Time (minutes)	1	3	4	6	7	9	11	13	18	23	33	43	54	63	73	107	137	177	226	287	322
C_2H_6	13300	25500	21800	18300	16600	14900	13800	12200	9970	4130	230	<50									
C_2H_4	17000	20400	19000	20100	18000	16900	14100	12200	8670	2350	<50										
C_2H_2	110	130	120	180	160	170	130	150	100	<50											
C_6H_6	2160	2230	2750	2590	3060	3560	3300	3570	3520	1770	500	260	160	90	50	10	20	6	9	4	5
C_7H_8	360	480	750	610	770	820	620	580	480	320	160	100	70	50	40	10	10	6	4	3	4
Ethylbenzene	9	20	30	20	30	30	20	20	20	10	6	4	4	3	3	2	1	1	1	0.3	0.2
p + m-Xylene	40	70	130	90	140	150	110	110	90	70	30	20	20	20	20	20	8	6	4	3	3
o-Xylene	5	10	30	20	30	30	20	20	20	10	6	4	4	4	4	3	2	2	1	1	1
H_2S	11700	23000	20300	19600	19500	19300	19000	18100	15900	9960	3400	2830	2550	2690	3840	2500	4320	1680	270	2900	210
COS	280	470	440	430	420	370	380	360	330	230	130	160	150	140	180	160	160	110	170	600	29
CH_3SH	70	140	100	90	60	50	90	80	50	20	2	0.2									
C_2H_5SH	20	40	30	40	30	20	20	10	10	<1											
CS_2	90	150	210	240	190	210	180	180	150	70	2	0.7									
Thiophene	130	150	170	140	160	160	160	160	140	60	5	<5									

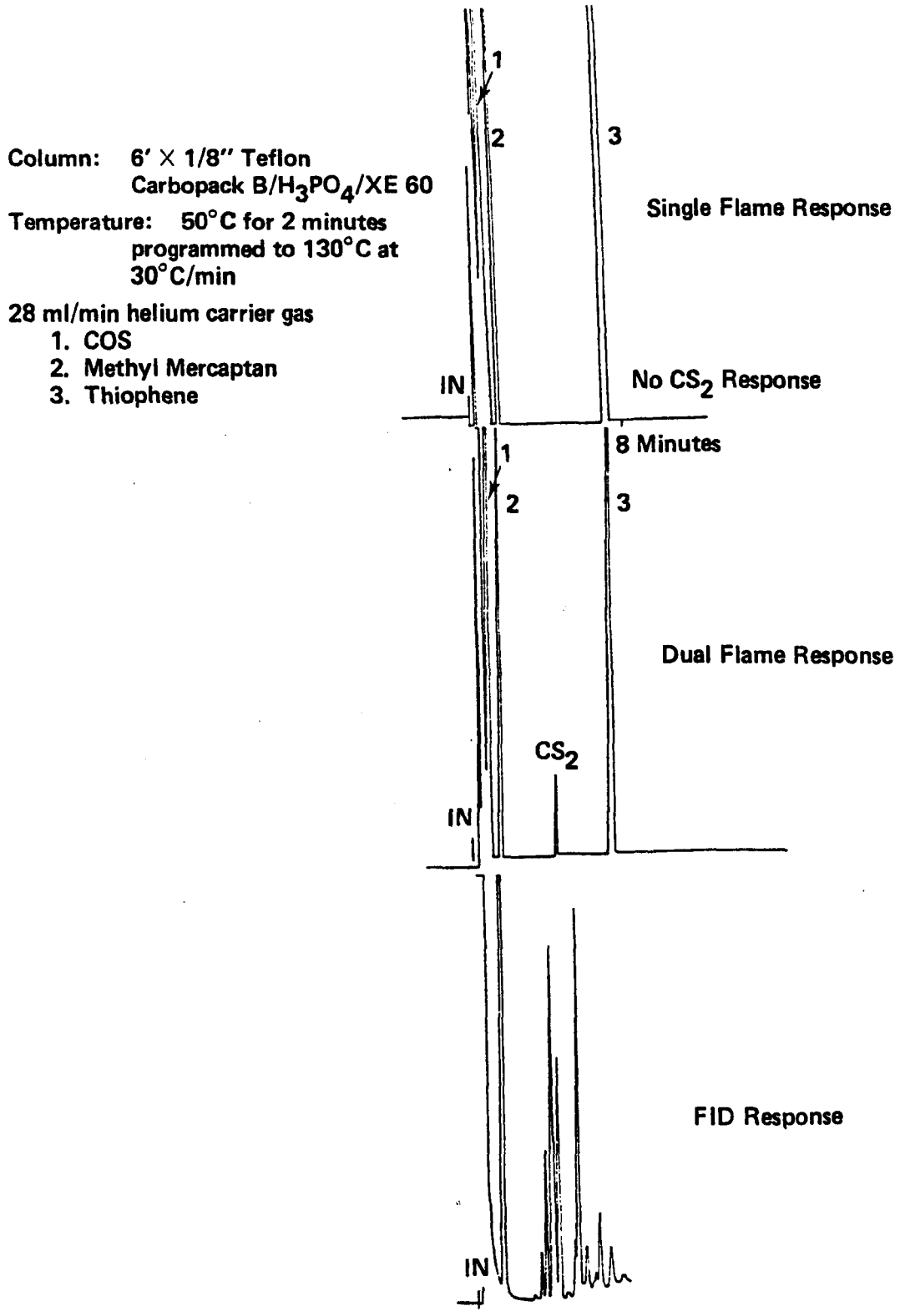

Figure 6. Comparison of dual and single flames modes for a coal gasifier product gas.

TABLE 3. INTEGRATED CONCENTRATIONS* FOR SELECTED COMPOUNDS IN THE GASIFIER PRODUCT GAS ($\mu g/m^3$)

	Run 51 N. Dakota	Run 47 Wyoming	Run 52 Illinois #6
C_2H_6	NA	2.4E6	1.8E6
C_2H_4	NA	1.6E6	2.7E6
C_2H_2	NA	1.6E4	3.4E4
C_6H_6	9.6E5	2.3E6	1.4E6
C_7H_8	6.7E5	1.3E6	3.6E5
Ethylbenzene	9.3E4	5.8E4	1.8E4
p,m-Xylene	2.0E5	3.9E5	9.8E4
o-Xylene	8.5E4	7.6E4	2.0E4
H_2S	1.0E6	1.6E6	6.1E6
COS	1.0E5	1.2E5	6.1E5
CH_3SH	3.5E4	2.3E4	1.4E4
C_2H_6S	5.5E3	1.1E4	1.7E4
CS_2	1.5E3	3.9E3	5.7E4
Thiophene	1.7E4	3.7E3	6.0E4

*Analyzed by gas chromatography.
NA = Not analyzed.

sample collection, it is essential that the samples be stable, at least for a few days in the bulbs. A stability study was made on three bulbs over a period of seven days. This is shown in Table 4. Only sulfur compounds were used in this study. As seen from the table, only a five percent (or lower) change was seen in the concentration of the various sulfur species. This was considered to be acceptable. Each compound is quantitated by means of calibration with a standard obtained commercially and certified within ± 2 percent accuracy or better. Periodically, the standards are verified against a permeation tube calibration system or against NBS standards. Accuracy of peak integration using the computer system is periodically checked by comparing the results against alternative methods i.e., peak height, triangulation, cut-and-weigh or other independent integration systems such as a small electronic integrator. Finally, since the major gases (H_2, CO_2, CO and CH_4) are analyzed continuously, only a few samples are periodically verified by the GC and compared with the data from the continuous analyzers. A difference of less than 10 percent between the two procedures is considered acceptable.

4.2 EVALUATION OF POLYMERIC SORBENTS AND GC/MS ANALYSIS

As described in Section 3.3, organic vapors are collected on two polymeric sorbents, Tenax-GC and XAD-2. Criteria for selection of these materials are described in Appendix I. Therein further details are given regarding the nature of these materials and how they are prepared for vapor collection. Conditions and procedures used for GC/MS analysis using high resolution glass capillary columns with a thermal desorption interface for Tenax and methylene chloride extraction for XAD-2 are described in Appendix II. In this section, the polymeric sorbents are evaluated for their adsorption efficiency and typical quantitative GC/MS results for selected organics are presented.

Tenax-GC was evaluated using a sampling manifold which permitted the flow through two Tenax cartridges (see Section 3.3). An injection port was installed upstream of the cartridge and benzene-doped nitrogen flowed through both cartridges at 2 l/min. Radiolabelled toluene was injected into the port and the second cartridge was replaced periodically with a fresh cartridge. Each cartridge was desorbed thermally onto a scintillation counting fluid and

TABLE 4. SAMPLE STABILITY CHECK

Sample No.*	Time (hours)	COS (ppm vol)	CH_3SH (ppm vol)	C_2H_6S (ppm vol)	CS_2 (ppm vol)	Thiophene (ppm vol)
S1 (7 minutes from coal drop)	3	550	39	20	230	250
	28	540	37	19	220	250
	49	530	37	19	220	250
	74	530	36	19	220	240
	98	540	38	20	220	250
	123	530	36	19	220	240
	147	510	35	18	210	230
S2 (16 minutes)	3	440	17	9	140	150
	28	420	16	9	140	150
	49	420	15	8	130	150
	74	420	16	9	140	150
	98	430	16	7	140	150
	123	410	15	7	130	140
	147	410	16	6	130	140
S3 (86 minutes)	3	150				
	28	140				
	49	140				
	74	130	<1	<1	<1	<1
	98	140				
	123	130				
	147	130				

*Samples obtained from low-Btu semibatch gasification of W. Kentucky #9 coal.

radioactivity was determined. Three different conditions were examined: (1) low toluene (0.8 mg), (2) high toluene (22 mg), and (3) low toluene with 3000 μg/l benzene in the purge gas. These experiments graphically illustrate (Figure 7), the problem of extrapolating from low to high concentrations. The amounts used are realistic in terms of actual gasifier process streams. The change in breakthrough volume for toluene with toluene is large. The displacement of toluene by benzene is also of importance, since a large background of hydrocarbons exists in the real sample and only a limited number of them are sought at low levels. This behavior is not unique to toluene but the threshold at which the above effects become significant changes with each sorbate. This experiment indicated that the amount of the real sample through the Tenax cartridge should be low and 100-150 ml was found to be appropriate for the gasifier sampling program (see also Section 3.3).

XAD-2 unlike Tenax-GC has a higher sample capacity. This material was evaluated under gasification conditions by taking small discrete Tenax samples upstream and downstream of the XAD-2 traps. Further performance checks were made on XAD-2 by collecting discrete (5-15 liters) samples on two XAD-2 cartridges in tandem upstream of the large XAD-2 traps. Results for three gasification runs during which the above approaches were adopted are shown in Table 5.

It is apparent that breakthrough is occurring at the high loading present in runs 26 and 32. To compare this with the results from the Tenax study, a summation of all the compounds quantitated on the XAD traps on a per gram basis was made. This is shown in Table 6. In the Tenax experiments the benzene mass was 8 mg/g at 20 percent toluene breakthrough and 16 mg/g at 65 percent toluene breakthrough.

This would indicate a greater capacity for collection of hydrocarbons by XAD-2 since only 10 percent of such compounds as toluene, C_2-benzene, methyl thiophene, C_2-thiophenes and naphthalenes were found downstream relative to upstream on runs 26 and 33. This is predictable on the basis of greater surface area of XAD-2 relative to Tenax. Capacity problems are apparent, however, in the analysis of phenol and cresols. The performance is good in

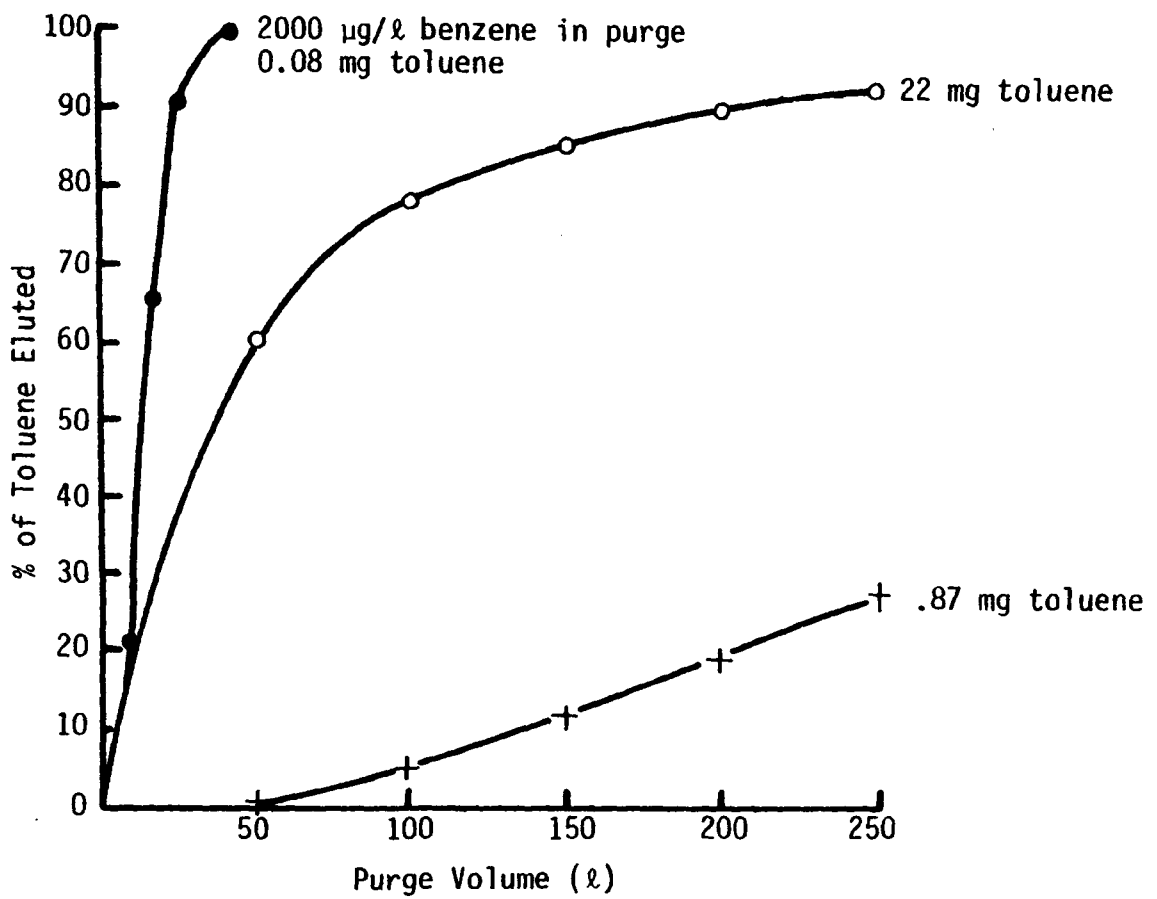

Figure 7. Performance of Tenax GC cartridges at high hydrocarbon levels.

TABLE 5. PERFORMANCE EVALUATION OF XAD-2 TRAPS

Compound	Run 26 Surge Phase - 733 l of gas in 34 min			Run 32 Surge Phase - 1500 l of gas in 10 min			Run 33 - Steady State Phase		
	Total mass on XAD trap (ng)	Concentration found on Tenax (μg/l)		Total mass on XAD trap (mg)	Concentration found on Tenax (μg/l)		Mass on XAD trap (mg)*	Concentration found on Tenax (μg/l)	
		Upstream	Downstream		Upstream	Downstream		Upstream	Downstream
Benzene	--	645	1088		124	405	--	22	0.2
Thiophene	--	101	116		12	133	--	1.0	ND
Toluene	--	324	37		72	44	--	15	0.4
Methylthiophene	111	67	3.5		6.4	3	1.9	0.6	ND
C_2-benzene	285	243	1.1		39	1.5	22	11.5	0.08
C_2-thiophene	37	16	2.3		2.2	ND	0.8	0.6	ND
Benzaldehyde	Not found	12	9	NOT	1.4	2.3	Not found	ND	0.45
Phenol	650	1500	907	DETERMINED	360	250	83	148	5.0
Benzofuran	225	57	ND		18	1.8	ND	10	0.05
Cresols	290	265	143		22	21	40	8.8	0.4
Naphthalene	32	510	42		160	45	175	76	2.2
Biphenyl	11	25	4		4.1	4.8	0.8	0.8	0.07
Dibenzofuran	12	7.6	ND		1.6	2.4	2.8	0.19	ND
Acetic acid	Not found	ND	39		3.4	6.2	Not found	ND	0.85

*35% of the values found after 100 min on line.

TABLE 6. ESTIMATED TOTAL HYDROCARBONS COLLECTED ON XAD-2 TRAPS

Run No.	Hydrocarbons/g XAD (mg)
26	18
33	6

run 33 at 6 mg/g hydrocarbons but in run 26 at 18 mg/g hydrocarbons severe breakthrough is observed. Run 32 showed the exaggeration of the effects seen in run 26 due to twice the gas volume and presumably even higher hydrocarbon accumulations.

The tandem XAD-2 cartridges were analyzed for runs 32 and 33 with the results given in Table 7. The higher breakthrough of naphthalene on the cartridge was somewhat surprising until the residence of the sample in the cartridge (0.75 sec) was compared with that of the trap (1.8 sec). This residence time is especially important for the less volatile compounds which may form aerosols.

Recovery studies were performed with 11 to 13 commonly observed organics ranging from the most volatile, methyl thiophene, to the least volatile, anthracene. In these experiments a mixture of these compounds in methanol was applied by direct injection into the bed of three prepared cartridges (1.5 cm x 6 cm) and permitted to equilibrate. The mixture contained d_{10}-anthracene as an internal standard. After equilibration each cartridge was extracted separately with methylene chloride for 22 hours in a Soxhlet extractor. The extracts were evaporated in K-D evaporators to 1 ml and analyzed by GC/MS/COMPUTER (see Appendix II).

The recovery experiments were repeated using a mixture of compounds shown in Table 8 with a 20 g portion of XAD-2 to simulate the sample from the XAD-2 traps. In these recovery experiments three internal standards were used, including d_{10}-anthracene at the start of the evaporation and p-chlorotoluene at the final step before analysis. Recoveries were determined based on each internal standard. In this evaluation only 4 ml of ~150 ml was evaporated to 1 ml.

TABLE 7. BREAKTHROUGH ON XAD CARTRIDGES[a]

Compound	Run 32			Run 33		
	Cartridge No.		% Breakthrough	Cartridge No.		% Breakthrough
	1 (μg/l)	2 (μg/l)		1 (μg/l)	2 (μg/l)	
Methylthiophenes	0.8	ND	0	31	ND	0
C_2-thiophenes	≤0.1	ND	--	5.6	ND	0
C_2-benzenes	10.7	0.2	1.9	≤236	0.4	≤0.2
Benzofuran	0.9	ND	0	ND	ND	--
Phenol	25	ND	0	239	ND	0
Cresol	17	ND	0	121	ND	0
Naphthalene	105	24	19	263	32	11
Biphenyl	1.6	0.9	36	2.2	1.2	35
Dibenzofuran	0.5	ND	0	0.8	ND	0

[a]Volume of process stream sampled was 5 liters.

TABLE 8. COMPONENTS OF STANDARD

	ng/l		ng/l
Anthracene-d_{10}	110	Naphthalene	126
2-Chloronaphthalene	107	Anthracene	96
p-Chlorotoluene	36	Phenanthrene	118
Indole	124	Benzofuran	170
Phenol	220	Biphenyl	94
3,4-Dimethylphenol	114	Methylindole	192.6
3,5-Dimethylphenol	132	Pyridine	157.1
2,3-Benzofuran	174.6	Methylquinoline	173.8
Toluene	138.7	Ethylbenzene	138.7
1,2,4-Trimethylbenzene	140.1	Methylthiophene	163.1
o-Cresol	164.4	Ethylthiophene	158.9
p-Cresol	162.8	Quinoline	174.9
Indan	154.2	Methylpyridine	
Indene	159.4		

The average and standard deviation of the response from each compound ratioed against each internal standard response for the same injection were computed. From these the percent deviation relative to the average was used as a measure of precision for each compound relative to each internal standard.

The recovery of the compounds selected for quantitation under the parametric variation phase of the study were evaluated. The results shown in Table 9 are for the discrete XAD-2 cartridge sampling procedure.

One set of triplicates had two internal standards including p-chlorotoluene, added just before the GC/MS/COMPUTER analysis. Overall average recoveries were 83 to 87 percent. Anomalous results were obtained for indan on one set of cartridges and for naphthalene on the other.

Similar experiments were conducted for the XAD-2 trap samples. Two sets of conditions were examined; the usual 10-fold evaporation from 5 ml to 0.5 ml and a larger 40-fold evaporation from 195 ml to 5 ml. The latter was used in some earlier work and occasionally when a larger sample mass was required. The results are given in Tables 10 and 11. Three internal standards were used for the evaluation.

The analysis of quinolines is very erratic (see below), and when this class is eliminated, average recoveries are those shown in Table 12. Interpretation of these results is complex since there are most likely competing effects. There is the possible loss of d_{10}-A or d_5-P during the sample handling process. Possible loss of the sample compounds during handling would tend to compensate for this. Add to these effects of varying instrumental precision with compound and internal standard, and an accurate assessment of the limiting parameters becomes more difficult. Substantial amounts of d_{10}-A are lost in the 40-fold concentration step relative to d_5-P and almost no d_5-P was lost relative to p-CT. In the 10-fold concentration of solvent other factors seem to be involved, perhaps instrumental, and the changes are not large relative to the variability of the recoveries.

TABLE 9. EVALUATION OF RECOVERIES FROM XAD-2 CARTRIDGES

Compounds	Mass Added to Cartridge (μg)	Percent Recovered		
		$d_{10}A$[a,b]	p-CT[c]	Replicate p-CT[c,d]
Methylthiophene	102	55 ± 8	60 ± 25	72 ± 13
Ethylbenzene	86	63 ± 12	67 ± 25	90 ± 10
Ethylthiophene	100	64 ± 10	68 ± 27	73 ± 30
p-Ethyltoluene	86	91 ± 9	83 ± 31	81 ± 28
Benzofuran	109	--	--	26 ± 8
Indan	96	189 ± 22	155 ± 49	35 ± 8
Indene	100	42 ± 11	42 ± 10	33 ± 4
Phenol	106	60 ± 2	64 ± 25	86 ± 6
o-Cresol	103	66 ± 25	63 ± 9	100 ± 17
Dimethylphenols (2 isomers)	20	ND	ND	57 ± 7
Naphthalene	181	127 ± 48	122 ± 18	230 ± 42
Biphenyl	152	70 ± 42	63 ± 4	107 ± 9
Anthracene	45	135 ± 72	124 ± 2.5	102 ± 3

[a]Average and standard deviation of triplicate analysis.

[b]Internal standard was d_{10}-anthracene added at the beginning of the extraction.

[c]Internal standard was p-chlorotoluene added after the evaporation.

[d]Extraction repeated on another time.

TABLE 10. RECOVERY OF COMPOUNDS FROM XAD-2 RESIN WITH EVAPORATION OF SOLVENT FROM 5 ml TO 0.5 ml

Spectrum No.	Compound	Percent recovery relative to		
		$d_{10}A$[a]	d_5p[b]	p-CT[c]
--	Pyridine	--	--	--
--	Methyl pyridine	--	--	--
--	Toluene	--	--	--
--	Methylthiophene	--	--	--
48	Ethylbenzene	88	99	33
50	Ethylthiophene	51	66	83
80	o-Xylene	55	72	90
180	Benzofuran	22	37	37
185	1,2,4-Trimethylbenzene	67	88	110
188	Phenol	72	93	116
225	Indan	44	60	75
230	Indene	59	79	99
256	o-Cresol	69	116	116
280	p-Cresol	65	110	110
300	2,6-Dimethylphenol	74	80	72
360	3,5-Dimethylphenol	75	127	122
360	Naphthalene	57	57	87
409	Quinoline	236	531	360
422	Methylindole	50	60	74
450	Indole	80	107	135
504	Biphenyl	133	159	196
510	Methylquinoline	159	190	234
592	Dibenzofuran	77	91	113
736	Phenanthrene	136	139	202
741	Anthracene	118	142	175
	p-Chlorotoluene	61	80	--
	d_5-Phenol	72	--	126
741	d_{10}-Anthracene	--	130	162

[a] d_{10}-Anthracene

[b] d_5-Phenol

[c] p-Chlorotoluene

TABLE 11. RECOVERY OF COMPOUNDS FROM XAD-2 RESIN WITH EVAPORATION OF SOLVENT FROM 195 ml to 5

Spectrum No.	Compound	Percent recovery relative to		
		$d_{10}A$[a]	d_5p[b]	p-CT[c]
--	Pyridine	--	--	--
--	Methyl pyridine	--	--	--
--	Toluene	--	--	--
--	Methylthiophene	--	--	--
5	Ethylbenzene	323	114	90
8	Ethylthiophene	263	90	100
20	o-Xylene	336	111	124
98	Benzofuran	345	115	124
101	1,2,4-Trimethylbenzene	236	84	93
105	Phenol	259	89	99
154	Indan	178	62	70
160	Indene	166	59	65
185	o-Cresol	203	72	80
214	p-Cresol	219	78	87
240	2,6-Dimethylphenol	130	68	53
320	3,5-Dimethylphenol	236	101	88
320	Naphthalene	131	78	47
280	Quinoline	346	204	123
290	Methylindole	90	26	32
422	Indole	146	52	57
480	Biphenyl	212	60	75
500	Methylquinoline	442	125	155
570	Dibenzofuran	86	24	30
712	Phenanthrene	139	39	49
719	Anthracene	137	39	48
	p-Chlorotoluene	263	90	--
100	d_5-Phenol	275	--	112
719	d_{10}-Anthracene	--	34	38

[a] d_{10}-Anthracene

[b] d_5-Phenol

[c] p-Chlorotoluene

TABLE 12. AVERAGE PERCENT RECOVERIES FROM XAD-2

Degree of Concentration	d_{10}-A[a]	d_5-P[b]	p-CT[c]
10-fold	78 ± 29	94 ± 32	107 ± 46
40-fold	201 ± 79	72 ± 28	74 ± 28

[a] d_{10}-anthracene
[b] d_5-phenol
[c] p-chlorotoluene

Based on an idealized chromatographic peak and using a 1.7 sec scan cycle, one can calculate the limits of error introduced solely by not acquiring intensity data for an ion at the peak maximum. These data are shown in Table 13.

TABLE 13. PERCENT DEVIATION OF RESPONSE RATIOS FROM IDEALITY AS A FUNCTION OF PEAK WIDTH

Peak Width	Deviation	
	1.7 sec cycle*	1.0 sec cycle
10 sec	18.5	9.5
8 sec	25	13.4
6 sec	33.5	18.7
4 sec	57	30

*Normal operating mode.

Actual measurements were made and calculated worst case results were not realized. Results are given in Table 14. Relative retention times for the compounds are given since, in general, peak widths increase with retention time. An unexpected trend was observed in these data. The relative deviation

TABLE 14. AVERAGE OF DEVIATIONS (%) OF RESPONSE

Compound	Relative Retention	d_{10}-Anthracene	2-Chloronaphthalene	p-Chlorotoluene
Toluene	0.16	9	19	10
Ethylthiophene	0.16	11	17	6
Pyridine	0.2	29	14	8
Ethylbenzene	0.44	32	14	7
Methylpyridine	0.56	39	21	19
Phenol	0.96	30	11	9
p-Chlorotoluene				
2,3-Benzofuran	1.28	27	13	7
1,2,4-Trimethylbenzene	1.32	31	12	4
Indan	1.68	25	16	5
Indene	1.74	23	4	6
o-Cresol	1.96	29	12	2
p-Cresol	2.2	22	7	14
Naphthalene	2.88	31	11	7
3,5-Dimethylphenol	2.92	38	7	11
3,4-Dimethylphenol	3.08	12	5	17
Quinoline	3.28	19	3	7
Methylindole	3.4	10	6	16
Indole	3.6	1	7	20
2-Chloronaphthalene	4.0			
Biphenyl	4.1	13	9	13
4-Methylquinoline	4.2	6	16	25
Benzofuran	4.8	3	12	24
Phenanthrene	5.88	6	10	10
d_{10}-Anthracene	5.90			
Anthracene	5.92	11	27	5

was lowest for the internal standard with the retention time nearest to that of the compound. It is unclear at this time whether this observation is due to the chromatography or some aspect of the mass spectroscopy since the mass of the ions used also correlate with retention times and the deviations.

Typical results from GC/MS analysis of the coal gasification process streams collected on XAD-2 cartridges from three runs are presented in Table 15. In addition qualitative identification of a large matrix of compounds is presented in Appendix III.

TABLE 15. QUANTITATIVE GC/MS RESULTS FOR SELECTED COMPOUNDS ON XAD-2 RESINS
(μg of compound/g of coal)

	Run 47 Wyoming		Run 51 North Dakota Lignite		Run 52 Illinois No.6 Coal	
	Surge	Steady-State	Surge	Steady-State	Surge	Steady-State
Benzofuran	43	7	35	2	3	2
Indan	20	3	9	0.5	1	1
Indene	89	36	91	7	10	5.5
Phenol	190	48	98	11	25	15
Biphenyl	45	1.5	2	0.5	1.0	2
Naphthalene	94	56	110	19	52	100
Anthracene	3	0.4	1	0.5	0.6	1
Phenanthrene	ND	ND	2	1	1.0	2
Dibenzofuran	0.7	ND	1	0.5	ND	0.2
Alkylbenzenes	>300	112	>460	100	54	62
Cresols	>110	36	77	5	ND	ND
Xylenols	56	21	160	1	ND	ND
Thiophenes	74	14	78	2	1	3
Pyridines	ND	ND	ND	ND	ND	ND
Quinolines	59	ND	36	ND	ND	ND
Indoles	ND	ND	ND	ND	ND	ND

ND = Not detected.

5.0 ANALYSIS OF LIQUIDS

Comprehensive analysis of liquids generated during coal gasification can be separated into three categories. Initial activities involve separation of crude tar and aqueous condensate, determination of pH and total volume of condensate and total weight and density of the crude tar. The second step in the analysis involves fractionation of a crude tar sample into chemically distinct classes of organic compounds by application of a wet-chemical partition scheme. In the final step, qualitative and quantitative analyses are performed on specific partition fractions and the amount of phenol, cresols, and xylenols in the aqueous condensate are ascertained.

5.1 SEPARATION OF TAR AND CONDENSATE

Crude tar and aqueous condensate generated by gasification are contained in a trap designed to collect liquid byproducts. Prior to comprehensive analysis, the tar and condensate must be isolated from each other. Separation is performed by allowing the mixture to drain through a filtration system into a separatory funnel. While a large portion of the crude tar is adsorbed during filtering, some residue is carried onto the separatory funnel with the condensate. This is removed by swirling the funnel gently, allowing the crude tar to settle, then draining it off. The tar free condensate is poured into a graduate cylinder where the total volume, pH, and color are recorded. The sample is then stored pending further analysis.

Isolation of the crude tar begins by dissolving the residue, which was separated from the condensate, in an organic solvent and transferring this solution to the separatory funnel. An aliquot of water is added to facilitate identification of the interface between the organic phase and residual aqueous condensate. The organic phase is allowed to drain into a roundbottom flask, and the solvent removed. The walls of the condensate trap and filter system

containing the adsorbed tar are then exhaustively extracted, the extracts combined, the solvent removed, and the total weight of the tar determined. The tar is redissolved in solvent with aliquots removed for bioassay, elemental analysis, density determination, and partitioning. Specific details and results are presented in upcoming sections.

The filtration system used to adsorb the tar consists of a powder funnel containing densely packed glasswool, followed by a funnel containing a fluted cellulose-acetate filter, (50 cm, grade no.512). A 500 ml or 1000 ml separatory funnel is used to collect the condensate. In general, methylene chloride (Burdick and Jackson, or Fisher HPLC grade) is used to isolate the crude tar; although ethyl acetate (Burdick and Jackson) was also used during a mass balance study for chlorine. Solvent evaporation is performed by a Buchler rotary evaporator. The total weight of crude tar and the tar density is determined and the pH of the condensate is measured.

5.2 TAR PARTITIONING

Tar samples are exceedingly complex[9] and require fractionation before direct analysis can be undertaken. Other investigators have utilized either of two procedures for this process: column chromatography or solvent partition. Chromatographic methods separate the crude material into fractions of like polarity and can function as a useful means of reducing a complex sample into one of more manageable proportions.[10] Solvent partition schemes have been devised, most notably by researchers from the tobacco industry,[11] in which group separations are accomplished on the basis of similar chemical properties, e.g., acids, bases, etc. The latter approach is more practical, particularly if fractions are to be chromatographed further. A detailed schematic of the partitioning procedure used is shown in Figure 8 and is a modification of the method utilized by Novotny[12] for air particulate extracts.

Five fractions are produced by application of the scheme: acids, bases and three neutral fractions. These three fractions are designated nonpolar (aliphatics and 1-2 ring aromatics), medium-polar (polynuclear aromatic hydrocarbons-PNA's) and polar (oxygenated material). Each group is then either analyzed directly by gas chromatography/mass spectrometry (GC/MS), or is chromatographed using high performance liquid chromatographic (HPLC) techniques.

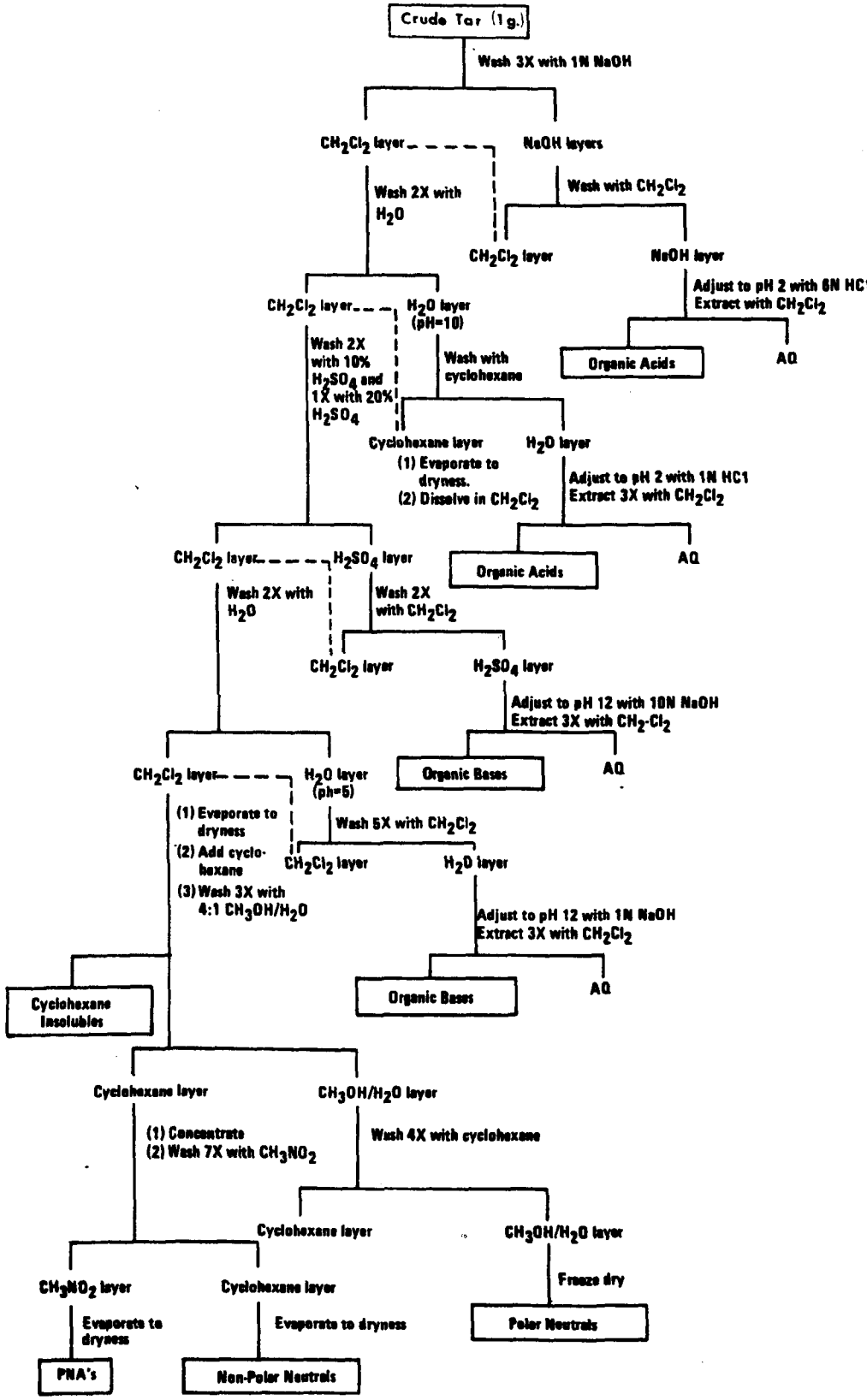

Figure 8. Tar partitioning schematic.

5.3 GC/MS ANALYSIS

As with vapor phase samples, qualitative analysis of fractions subjected to GC/MS is achieved by comparison of the mass cracking pattern of the unknown mass spectra to an eight major peak index of mass spectra.[11] Quantitative results are obtained via internal standard procedures using the detector response of the peak intensity as provided by the mass spectrometer. Internal standards consist of deuterated materials, phenol-d_5, quinoline-d_7 and anthracene-d_{10}. This process can be applied to single species as well as, in certain cases, to classes of compounds.

For single species, in order to eliminate the need to construct complete calibration curves for each compound to be quantitated, the method of relative molar responses (RMR) was used. The calculations are as follows:

$$RMR = \frac{A_u/moles_u}{A_s/moles_s} \qquad (1)$$

where A = peak area or other suitable response parameter (u and s designating unknown and internal standard).

Equation (1) is equivalent to:

$$RMR = \frac{A_u/g_u/mw_u}{A_s/g_s/mw_s} \qquad (2)$$

where g = grams and mw = molecular weight.

Rearranging,

$$g_u = \frac{A_u \cdot mw_u \cdot g_s}{A_s \cdot mw_s \cdot RMR} \qquad (3)$$

The value of the RMR is determined from at least three independent analyses.

The basis of class quantitation by GC/MS lies in the selection of a mass spectral fragment ion which is common and unique to all members of a class. If, in addition, that ion is of approximately the same relative intensity for all, or nearly all, class members, then all compounds can be quantitated on the basis of that single ion. In practice, no ion is unique to one class, but for samples which are highly enriched in single compound types, the presence of a characteristic ion for one type is not unusual. Research of a mass spectral catalog[13] of fragmentation patterns of alkylated indoles, pyridines, quinolines, and naphthalenes, revealed an ion that meets the criteria outlined above for each of these classes. Using the mass spectrometer to generate single ion plots (using the characteristic fragment ion) peaks, are obtained for every class member. Intensity data are then available for use to quantitate every compound. Summation of the results for every compound provides a reasonably accurate assessment of the amount of material associated with individual classes. The acid fraction is analyzed by either glass capillary GC/MS or HPLC. The latter method has recently been developed, and owing to its greater speed and reliability, will be routinely utilized for future analyses.

For GC/MS analysis, an aliquot of the acid fraction (spiked with phenol-d_5 as internal standard) is introduced into the GC/MS system. The intensities of those peaks corresponding to phenol, cresols, xylenols and higher alkylated phenols are recorded and compared to the intensity of the internal standard. Using response factors (previously calculated from reference standards), quantitation is carried out on each compound.

For analysis of tar acids by HPLC the method used is the same as is described below for gasifier condensate. Aside from speed and ease of analysis, the HPLC appproach utilizes the aqueous solution of acids instead of the methylene chloride extracts which are used for the GC/MS procedure. This is important since the difficulties associated with the extraction of phenolics from water probably results in an inaccuracy of the GC/MS method.

The tar bases are analyzed directly by glass capillary GC/MS. The internal standard used here is quinoline-d_7, and quantitation is performed as described for tar acids. Compounds routinely analyzed are: alkyl pyridines, quinoline, alkylquinolines, alkylbenzoquinolines and acridines.

The subfractionation of the neutral fraction consists of solvent partition of a cyclohexane solution of the neutrals with methanol/water (1:4) and nitromethane. The polar neutrals are recovered in the methanol/water fraction and the medium-polar neutrals are associated with the nitromethane fraction. Those materials remaining in solution in cyclohexane comprise the nonpolar neutrals, and are analyzed directly by GC/MS using wall coated open tubular (WCOT) glass capillary columns.

The medium-polar fraction containing PNA hydrocarbons is obtained by preferential partition from cyclohexane into nitromethane. Analysis is carried out by GC/MS using the same column as described earlier for nonpolar neutrals.

Those neutral materials that are washed into methanol/water (1:4) from cyclohexane are termed polar neutrals. The nature of the compounds comprising this function is such that direct analysis by GC/MS is not practical. Various modes of high performance liquid chromatography (HPLC) have been carried out with limited success.

Because of the intimate admixture of the coal tar and condensate in the tar/water trap, a large quantity of organic matter is associated in the condensate. The bulk of this material is comprised of the more water soluble phenols. Although analysis for various hydroxylated aromatic compounds were initially carried out by GC/MS, due to the well known difficulty of extracting phenolics into organic phases and the slower turn-around associated with GC/MS samples, a more direct analytical method was sought.

The use of HPLC for the analysis of phenolics is relatively straightforward, and a procedure utilizing this technique, was developed. Because of their overwhelming abundance in the condensate sample compared to all other hydroxyaromatics, only phenols, cresols (3 possible isomers) and xylenols (6 possible isomers) were analyzed. Chromatographic conditions were such that single peaks were obtained for phenol, all cresol isomers, all xylenol isomers and the internal standard, isopropyl phenol, in that order. The HPLC system uses a reverse phase column with methanol/water as mobile phase. The UV transparency of this solvent system permits detection at 215 nm, a wavelength where all cresols and xylenols have about the same extinction coefficient. Thus, the quantitation of coexisting species is valid, and only three

calibration curves need be prepared instead of one for every isomer. Using reference standards, calibration curves for the three compound groups are prepared and the regression equations (least squares) determined. In all cases the square of the correlation coefficients was greater than 0.99. The curves were validated through the analysis of known samples.

Condensate samples are pH adjusted (~pH 4.5) to ensure that phenolics are present in their acid form, a known amount of internal standard is added and equilibrated and an aliquot is injected onto the hplc. Peak areas are determined by electronic integration and amounts of phenol, cresols and xylenols are calculated from the appropriate regression analysis.

Typical results for the analyses of selected compounds in tar and aqueous condensate from three runs using Wyoming, North Dakota and Illinois No.6 coals are presented in Tables 16 through 19. In addition, qualitative identifications of a large matrix of compounds in various tar fractions are reported in Appendix III.

TABLE 16. ELEMENTAL ANALYSES* OF CRUDE TAR
(expressed in wt %)

Run No.	C	H	N	S	O
47	81.4	7.8	1.1	1.5	7.8
51	82.9	6.9	1.0	2.5	6.5
52	85.5	6.5	1.0	1.9	4.9

*Analyzed by Galbraith Laboratories, Knoxville, TN.

TABLE 17. TYPICAL PRELIMINARY AND PARTITION RESULTS FOR TAR AND CONDENSATE

Run No.	Coal	Total Tar (g)	Tar							Condensate		
			Density g/ml	Acids wt %	Base wt %	Ins. wt %	NPN wt %	PN wt %	PNA wt %	pH	Volume ml	Organic Extractables g
47	Wyoming	28.8	1.14	31.0	2.6	2.0	27.8	18.1	18.5	11	500	4.2
51	N. Dakota Lignite	17.7	1.33	23.5	4.5	11.0	17.1	7.7	136.5	9	700	4.2
52	Illinois No.6	49.3	1.39	19.8	2.7	9.0	16.8	7.2	44.6	8-9	640	NA

Ins: Insoluble in cyclohexane.
NPN: Nonpolar neutrals.
PN: Polar neutrals.
PNA: Polynuclear aromatics.

TABLE 18. QUANTITATIVE RESULTS FOR SELECTED COMPOUNDS IN TAR FRACTIONS (expressed in grams)

Fraction		Run 47	Run 51	Run 52
PNA	Naphthalene	0.06	0.57	2.44
	Alkylnaphthalene	0.06	0.20	0.38
	Fluorene	0.03	0.09	0.27
	Dibenzofuran	0.02	0.08	0.31
	Anthracene + Phenanthrene	0.05	0.22	1.31
	Fluoranthene	0.02	0.05	0.45
	Pyrene	0.02	0.04	0.31
	Chrysene	0.01	0.04	0.23
	5-Ring Compounds	Trace	0.01	0.18
Organic Bases	Alkylpyridines		0.04	0.03
	Quinoline	0.007	0.04	0.01
	Alkylquinolines		0.01	0.01
	Alkylbenzoquinolines		0.01	0.18
	Acridine	<0.0005	0.003	0.003
Organic Bases	Phenol	0.62	0.39	0.02
	Cresols	1.13	1.19	0.05
	Xylenols	1.36	0.17	0.02
	o-isopropylphenol	0.02	0.25	<0.0005
	trimethylphenol	0.12	0.05	0.001

GC/MS Conditions: LKB-2091 GC/MS, 15-20 m WCOT capillary column, 1% Se-30/$BaCO_3$, 100°/2 min/8° min/265°.

TABLE 19. QUANTITATIVE RESULTS FOR PHENOLS, CRESOLS, AND XYLENOLS IN CONDENSATE BY REVERSE PHASE HPLC AND GC/MS
(*expressed in grams*)

Run No.	Phenol	Cresols	Xylenols	Method
47	0.58	0.28	0.10	GC/MS
51	2.03	1.04	0.16	HPLC
52	1.93	1.02	0.12	HPLC

GC/MS: Finnigan 3300 GC/MS, 24 m SCOT 1% SE-30 glass capillary column, 100°/8°min/250°.

HPLC: Reverse phase HPLC analysis, 1:1 MeOH/H_2O, Water's Associates, pump 600 psi; SF-770 VV variable wavelength detector, 2 ml/min.

6.0 ATOMIC ABSORPTION METHODS

Selected trace elements are analyzed by atomic absorption (AA) following various digestion procedures. The following sample preparation and analysis scheme is used.

6.1 SAMPLE PREPARATION AND ANALYSIS

The various trace elements that have been analyzed include Hg, As, Se, Sb, Cd, Pb, Ni, Cu, Cr, and Be. They can be subdivided into three groups based on the sample preparation and analysis procedure. Methods for Hg are unique and it can be classified as Group 1; As, Se, and Sb are in Group 2, and Cd, Pb, Ni, Cu, and Be are in Group 3. A further subdivision is possible based on the sample matrix. During the course of this project, five different types of samples have been analyzed. These include parent coals, reactor residues, tars, aqueous solutions (condensate or scrubber) and sorbent materials for gaseous effluents. A mass balance has been attempted from the results for various tests and is discussed further in Section 6.3. Sample preparation and analysis procedures for the three groups and the various matrices are given in the following subsections.

6.1.1 Coals and Residues

For Hg analysis a 1-g sample of coal prepared for gasification (approximately 6-14 mesh) is placed in a platinum cup. The sample is then placed in a quartz-lined Parr oxygen bomb calorimeter containing 10 ml of 10 percent nitric acid. The vessel is pressurized to 24 atm of O_2 and the sample is combusted. After cooling, the resulting solution is then diluted to 25 ml with 10 percent nitric acid and submitted for analysis by the cold vapor technique.[14,15] For Hg in the residue, 1 g of residue material is mixed with 0.5 g benzoic acid (after being ground to approximately 200 mesh), subjected to Parr O_2 bombing and analyzed as for the coal procedure. For Group 2 and Group 3 elements, the residue is heated and analyzed in exactly the same way as coals which is described below.

For Group 2 elements, the coal (or residue) is crushed to 200 mesh and subjected to one of two procedures. The first procedure is based on wet acid ashing; 0.1 g of coal sample (or 0.03 g residue sample) are treated to a mixture of 3 ml concentrated H_2SO_4 and 5 ml concentrated HNO_3 for 1/2 hour on an aluminum block heated to 200°C. After 1/2 hour, the mixture is cooled and treated with an additional 2 ml of concentrated perchloric acid and digested overnight for removal of the nitric and perchloric acids. The mixture is then cooled and 7 ml distilled water, 2 ml 20 percent ascorbic acid and 1 ml 0.06 M NaI are added, respectively, mixing after each reagent addition. Finally, the mixture is extracted with 2 ml of toluene. The toluene phase is then analyzed for antimony using electrothermal atomic absorption. One ml of 6.0 M NaI is then added to each mixture and reextracted. The toluene phase is then analyzed for As and Se by electrothermal AA. Sixty µl of 0.1 percent Ni $(NO_3)_2$ is first added to the furnace and dried. Twenty µl of sample is then added and analyzed. The entire procedure takes two to three days.[16]

A second procedure may be used for coal (or residue) analysis.[17] The coal (1.0 g) or residue (0.2 g) is subjected to a dry ashing at 750°C after mixing with 1 g of Eschka mixture (MgO and Na_2CO_3). After four hours the mixture is cooled, dissolved in concentrated HCl and diluted to 100 ml with distilled water. The resulting solution is analyzed for As, Se, and Sb by hydride generation AA. Here the analyte is reduced to the respective hydride with sodium borohydride and the resulting gas is swept into an argon-hydrogen flame for subsequent analysis.

For Group 3 elements, the coal (or residue) is dry-ashed at 450°C for eight hours. After the ash content is determined, the sample is then subjected to acid digestion and analyses by AA; 0.1 g of ash is placed in a Parr acid bomb teflon cup and wetted with 1 ml aqua regia. Three ml of concentrated HF is added to the mixture. The resulting mixture in the teflon vessel is placed in the stainless steel bomb and digested in an oven for 150°C for 30 minutes. The vessel is cooled, and the mixture is treated with 2.8 g boric acid. The resulting solution is diluted to 50 ml with distilled water and analyzed for Cd, Pb, Ni, Cu, Cr, Be and others by electrothermal AA.[18]

6.1.2 Tars

The tar material is extracted out of the condensate traps with methylene chloride. The extract is evaporated at room temperature under a stream of N_2. For mercury, 1 g of tar is Parr O_2 bombed and analyzed by the procedure given in Section 6.1.1. The resulting residue is dissolved in 1 ml of aqua regia and subjected to electrothermal AA for analysis of lead and arsenic.

6.1.3 Aqueous Condensate and Scrubber Solutions

The water condensate is extracted with methylene chloride to remove the organics. The methylene chloride phase is combined with the tar condensate materials in Section 6.1.2. The pH of the aqueous phase is adjusted to 4.0 and extracted with methylene chloride to remove the phenolic material. The aqueous phase is then analyzed directly by the cold vapor technique for Hg and electrothermal techniques for the other elements as described in Section 6.1.1. Acidic scrubbers are analyzed by direct aqueous injection onto the AA.

6.1.4 Sorbent Materials for Gaseous Effluents

These materials include XAD-2 resins and charcoal traps. Again the sorbents are subjected to Parr O_2 bombing and analyzed for Hg, As, and Pb by the appropriate AA procedures mentioned in Section 6.1.1.

6.2 QUALITY CONTROL PROCEDURES

All samples are analyzed in duplicate. Wherever possible, the NBS (National Bureau of Standards) Standard Reference Materials are used in construction of calibration curves. These include SRM 1632a bituminous coal, SRM 1633 flyash and SRM fuel oil which are analogous in matrix type to the coal, residue, and tar materials encountered in this study. Wherever NBS SRM's were unavailable, the method of standard additions was employed to compensate for matrix mismatching between sample and standard.

6.3 TYPICAL RESULTS

Figure 9 shows the AA analysis for seven trace elments in six U. S. coals. For comparison, results from Gluskoter, et al.[19] are presented. Good qualitative agreement is found. Figure 10 shows the percentages of trace elements lost to gaseous and liquid effluents for Pittsburgh No.8 coal. These are obtained by difference between the amounts in the coal and the residue. Again for comparison, results of Attari[20] are presented. Finally, Table 20 shows overall material balance and the fate of trace elements from gasification of Illinois No.6 coal. Mercury is almost totally evolved and is expected to end up in the gas. Gas phase analyses are as yet not available but can be crudely estimated by difference. Almost twice as much chromium is recovered than fed. This may be a contribution of the stainless steel reactor.

TABLE 20. AVERAGE MATERIAL BALANCE FOR THREE ILLINOIS NO. 6 COAL GASIFICATION RUNS

	μg (Average)					
	Coal in	Char	Tar	H_2O	Vapor	Material Balance
As	5050	3056	176	633	1768+	76.5% (111%)**
Be	1396	1265	--	--	NA	90.6%
Cd	183	139	2	7	NA	80.9%
Cr	27.5K*	52K*	--	0.90K*	NA	192.0%
Hg	188	7.1	--	--	NA	3.8%
Pb	3716	1639	41	65	NA	45.0%
Se	2407	576	27	668	NA	53.0%

*K = 1000.

**Accounting for vapor.

+Estimated from results obtained using a 100 mg charcoal trap.

NA: Not analyzed.

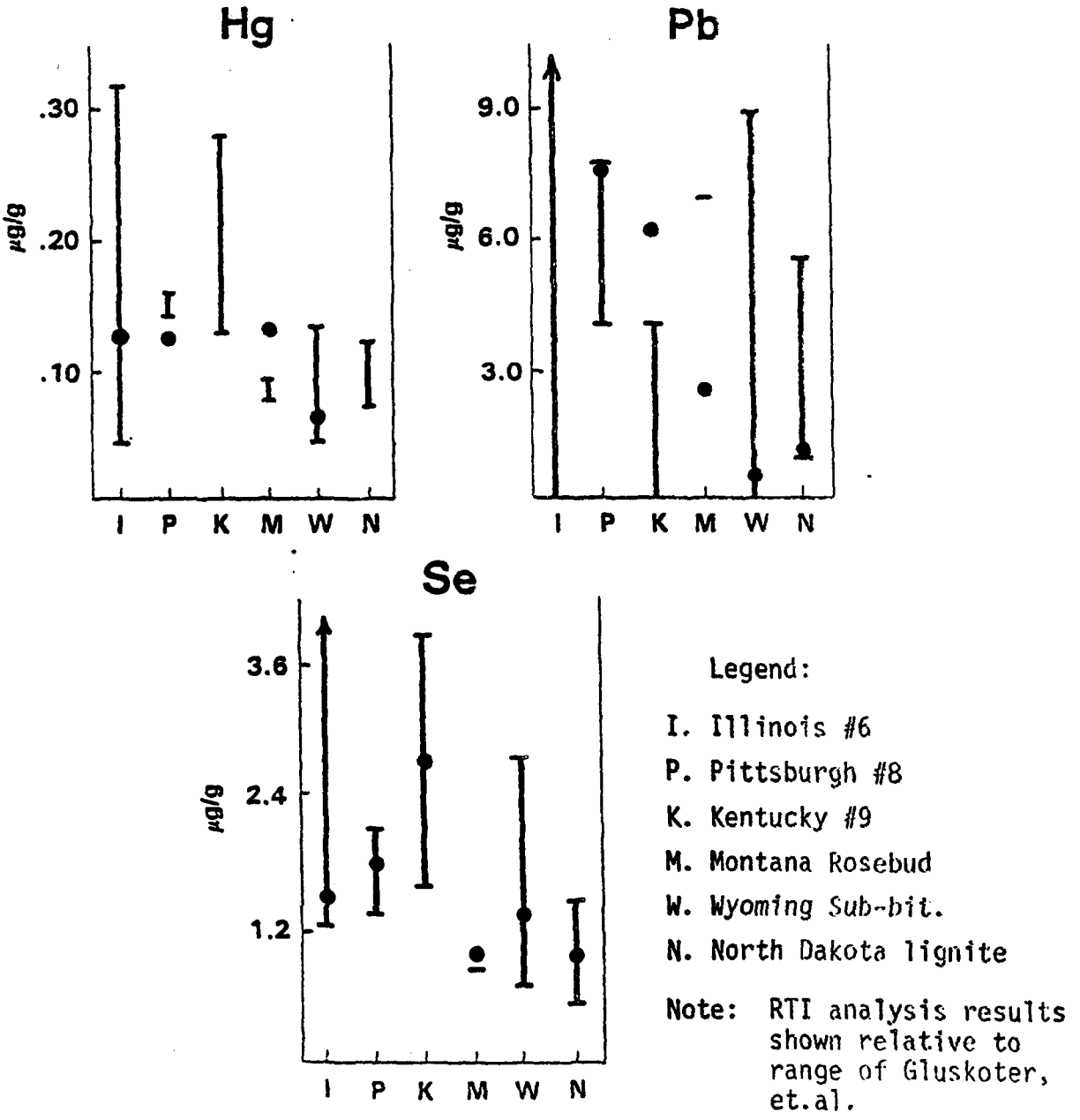

Ref. Gluskoter et al., 6-77

Figure 9. Range of selected trace elements in coals.

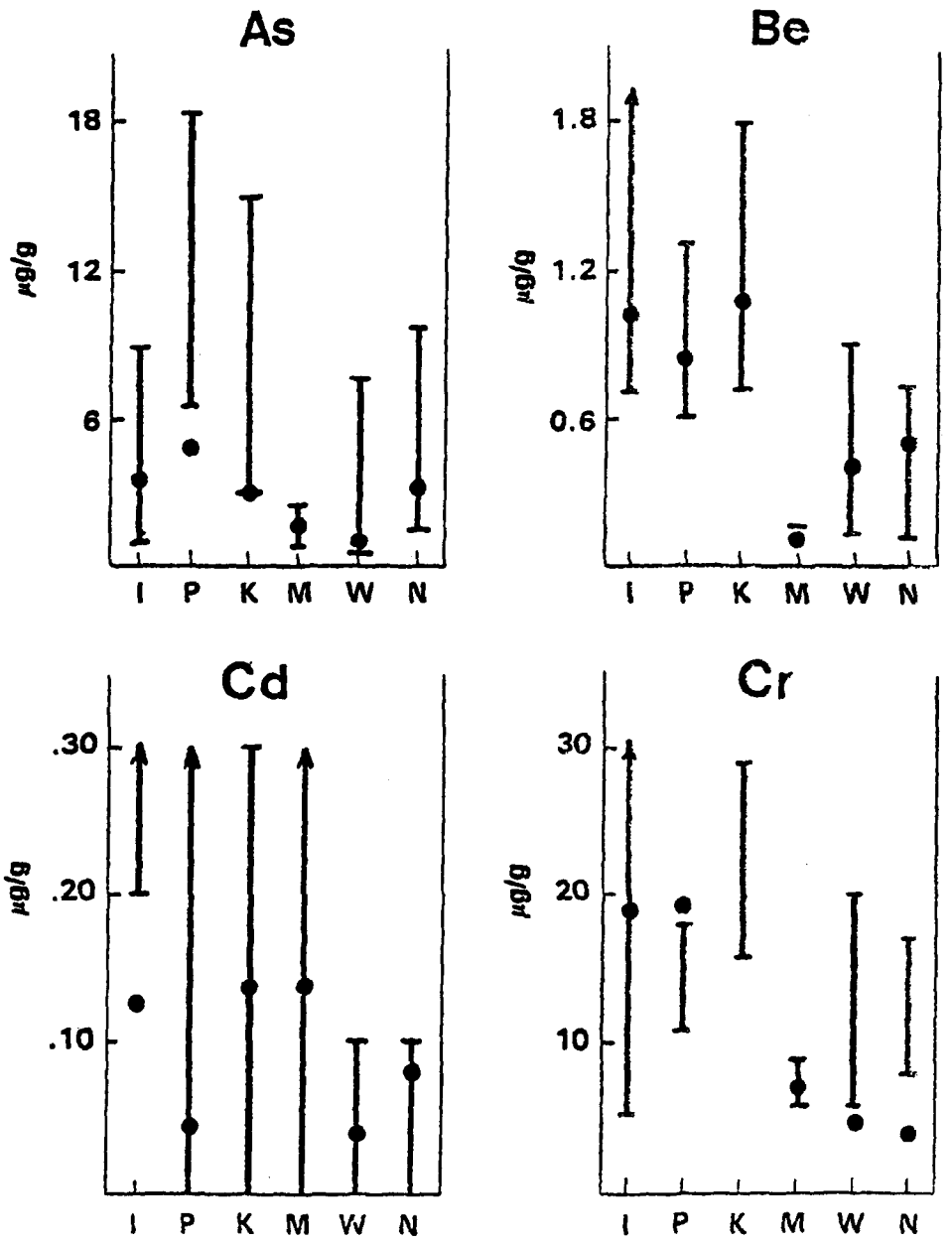

Reference: H. J. Gluskoter, et al. "Trace Elements in Coal: *Occurence and Distribution*" Illinois State Geological Survey report to IERL-EPA 6-77

Figure 9. Range of selected trace elements in coals. (continued)

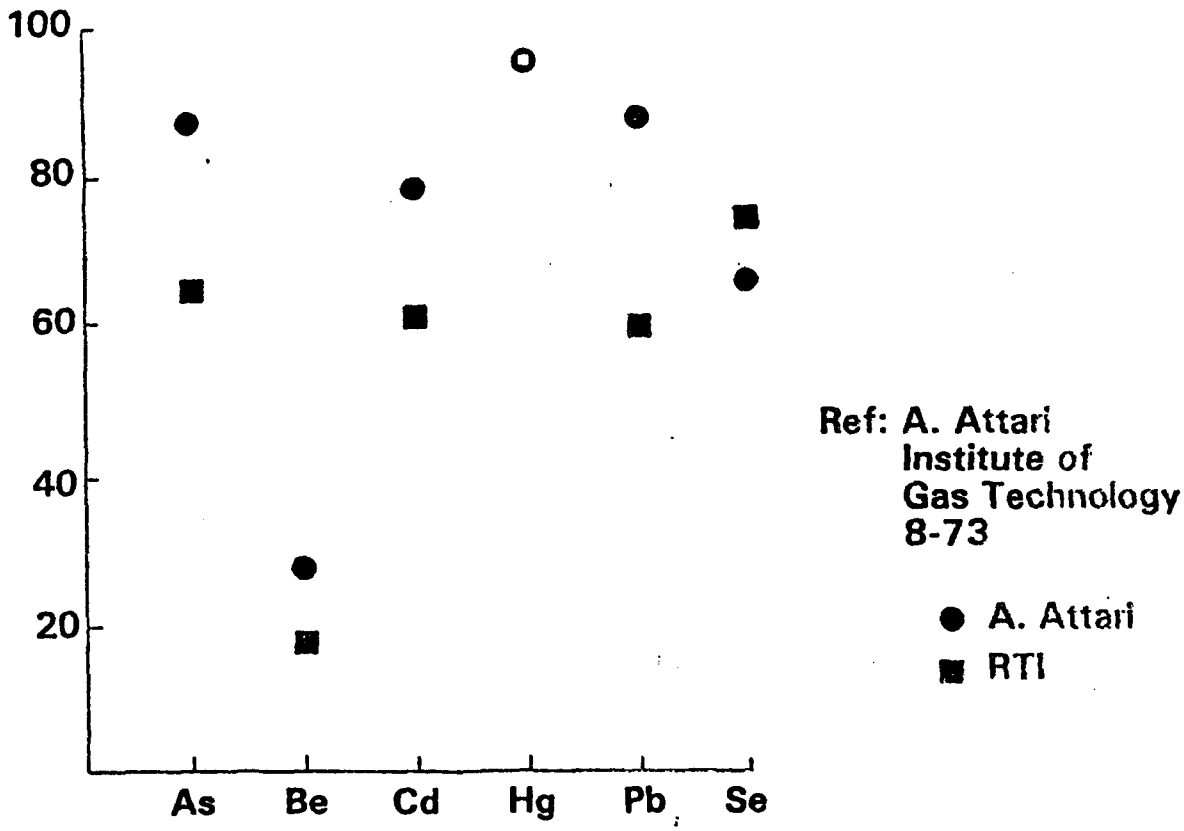

Figure 10. Percent loss of effluents (Pittsburgh No. 8 coal).

7.0 FOURIER TRANSFORM INFRARED SPECTROMETRY

Application of developmental work has been initiated for the Fourier Transform Infrared Spectrometer (FTIR) to the analysis of coal gasification samples in three distinct areas: (1) high resolution FTIR of gas sample, (2) gas chromatography/FTIR of semivolatiles, and (3) low resolution FTIR of coal, tar and ash.

Results from the FTIR analysis at coal gas were confirmed for 13 compounds and five additional compounds were identified. Two compounds were quantitated. High resolution FTIR, a nearly universal detector, is especially useful for determining the presence or absence of specific pollutants of interest which are not easily determined by routine gas chromatographic methods. The technique also serves as an independent check on the quantitation obtained by GC.

Over 24 individual compounds were identified in an XAD-2 extract from the GC/FTIR spectra, including benzene, phenol, naphthalene, and some of their alkyl derivatives. In many cases, positional isomers were distinguished (e.g., 2,4-xylenol and 2,6-xylenol). Compounds were identified by comparison with gas phase spectra of standards. Selected compounds were also quantitated. This technique is superior to GC/MS in its ability to distinguish positional isomers. The relative utility of class quantitation by GC/FTIR versus GC/MS is still under evaluation.

The analysis of coal, tar, and ash samples by FTIR indicates that general information regarding types of inorganics and organics may be obtained. The qualitative and quantitative capabilities of the technique for these samples are under further investigation.

7.1 HIGH RESOLUTION ANALYSIS OF GAS SAMPLES

High resolution FTIR is particularly suited for the analysis of low molecular weight polyatomic gases produced during coal gasification. At high resolution (0.125 cm^{-1}), the sharp lines produced by rotational energy level

transitions are easily distinguished and measured for qualitative and quantitative work. Quantities of gases are determined by comparing the absorption of a preselected sample spectral line with that of a standard. Thus it is possible to simultaneously identify and quantitate every gas species present which absorbs IR radiation and which has had a standard curve generated (H_2, N_2, and O_2 do not absorb; also quantities of H_2O and CO_2 cannot be determined due to interference from these species within the optical path of the spectrometer).

Gases were received in 500 ml glass gas bulbs fitted with teflon stopcocks. A sample was attached to an evacuated (<2 mmHg) Perkin-Elmer Model 186-035 10 m Variable Path Gas Cell and expanded into the cell to equilibrium. The cell volume was 4.4 liters and the optical path set at 8.76 m. The cell was fitted with NaCl windows. The pressure was brought to 1 atm with N_2 gas at ambient temperature. The sample spectrum was then collected (100 scans), Fourier transformed, and ratioed to a previously collected background spectrum of N_2. Identification was made by comparison with standards or reference to published literature.

Standards of COS, NH_3 and HCN were prepared by making appropriate dilutions of pure gas standards with N_2. The standards were introduced into the cell in the same manner as the samples. A series of dilutions for each gas was made, the spectra collected, and a plot of absorbance versus wave number for a characteristic absorption line prepared. The absorbance for a corresponding wave number in the sample gas was then compared to the standard and the concentration for that species determined.

Four gas samples were analyzed by High Resolution FTIR. Quantitation was performed on COS and estimated on HCN. Table 21 shows the concentrations found in the four gas samples. Estimates were made on percent composition for gases qualitatively identified based on absorbance relative to known species. It was notable that surge samples showed significantly higher amounts of COS and C_2 hydrocarbon gases than did the steady-state samples. There was little correlation among steady-state samples, however. Principal components of all samples were CH_4, CO, CO_2, H_2O and COS. A total of 13 confirmed species and 5 suspected components have been identified in the four samples.

Table 21. HIGH RESOLUTION FTIR ANALYSIS OF SELECTED GAS SAMPLES

Species	Run 49 Steady State	Run 49 Surge	Run 50 Steady State	Run 50 Surge
CH_4	+++	+++	++	++
C_2H_6	-	++	TR	++
C_2H_4	-	++	-	++
C_2H_2	-	-	-	+
C_6H_6	-	-	-	-
CO	++	++	++	++
CO_2	+++	+++	+++	+++
COS	TR	120	96	370
C_2H_4O	-	-	TR?	-
CH_3SH	-	TR	-	-
$(CH_3)_2S$	-	TR?	-	-
CH_3Cl	-	-	-	-
CH_3NH_2	-	-	-	-
HCl	-	-	-	-
HCN	>148	-	-	<148
HCHO	-	-	-	TR
NH_3	?	-	-	-
AsH_3	-	-	-	-
$Ni(CO)_4$	-	-	-	-
$(CN)_2$	-	?	-	?
C_2H_5SH	-	-	-	?
CH_3OH	-	-	+	TR
CH_2CHCHO	-	TR	-	-
NO_x	-	-	-	-
$COCl_2$	-	-	-	-
HNO_3	-	-	TR?	-

Legend:

+++ ≥ 10% Gas Composition

++ 1 - 10% Gas Composition

\+ 10 ppm - 1% Gas Composition

TR Lowest detectable confirmation of presence <10 ppm

— None detected

? Assignment uncertain; interfering absorbance or no reference standard

Concentrations expressed in PPM for quantitatively analyzed species

7.2 GC/FTIR ANALYSIS OF SEMIVOLATILES IN XAD-2 EXTRACT

Because of its speed and sensitivity, FTIR can be used as a detector for gas chromatographic effluents (GC/FTIR). The technique has been applied to the analysis of the XAD-2 extracts which have heretofore been analyzed by gas chromatography/mass spectrometry (GC/MS). Infrared is much better at certain class distinctions than mass spectrometry, due to the characteristic frequencies for all compounds containing a given functional group. Thus, GC/FTIR may prove superior to GC/MS for routine quantitation of such classes as "total aromatics," "total phenolics," etc.

The goal of this study was to demonstrate the feasibility of GC/FTIR for the analysis of semivolatile coal gas effluents and determine whether it is suitable as merely a confirmatory technique, or whether it offers advantages over GC/MS which would make it a primary analytical technique.

A sample of extract from XAD-2 resin of gasifier run 41 was qualitatively analyzed on a 2 mm ID x 180 cm glass column packed with 3 percent OV-17 on Chromasorb G (AW) 100/120 mesh. The column was installed in a Varian 3700 GC equipped with a thermal conductivity detector and interfaced to the Nicolet 7199 FTIR system through the Nicolet GC-7000 GC/FTIR Accessory.

An injection of 1.0 μl of the XAD-2 extract was chromatographed under the following conditions: temperature program (50°C/3 min to 240°C/10 min at 8°/min); He flow (30 ml/min); T_{inj} (222°C); TC detector temperature (280°C). Infrared spectra consisting of four low resolution scans were collected when the eluting species exhibited an absorbance greater than 0.005 over any of the five preselected windows corresponding to specific chemical group absorptions.

The resulting chromatogram of selected infrared bands, called a "chemigram" is shown in Figure 11. The band from 3600-3700 cm^{-1} is selective for compounds containing the hydroxyl group (the three large peaks are phenol and the cresol isomers). The 3025-3100 cm^{-1} band is characteristic for aromatics and/or alkenes. The 1630-1730 cm^{-1} band is characteristic for carbonyl-containing compounds. Unfortunately some noncarbonyl infrared absorbances (notably from overtones in the naphthalene spectrum) interfered; no carbonyls were detected except for an artifact. The 1560-1630 cm^{-1} band is characteristic for aliphatic compounds. The 1475-1520 cm^{-1} band is characteristic for aromatics and is therefore a cross-check with the 3025-3100 cm^{-1} band.

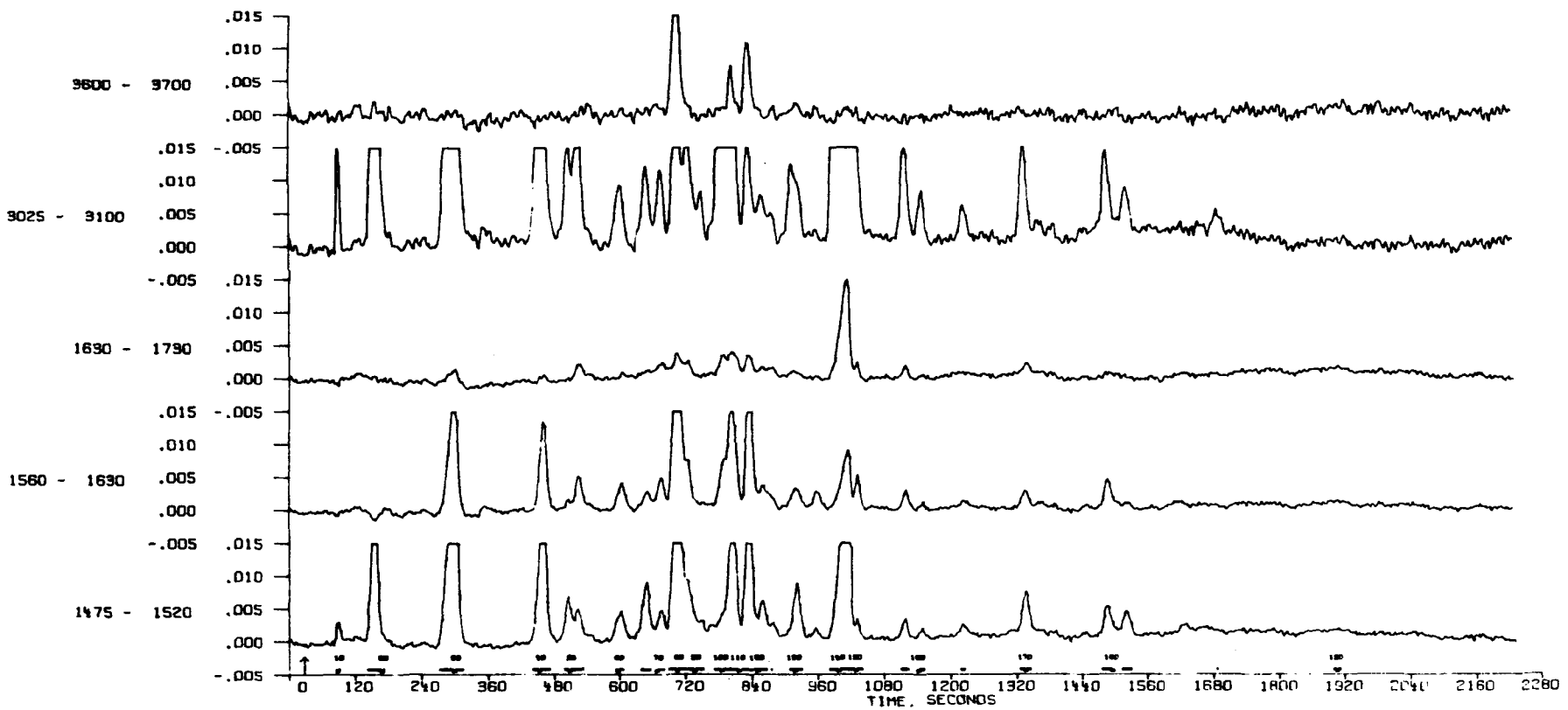

Figure 11. Chemigram of infrared bands (cm^{-1}) versus time during GC/FTIR analysis of extract of XAD-2 resin sampled during surge phase of run 41.

Interpretation of the chemigram indicates that most (but not all) of the compounds are alkyl aromatics. There are a few phenolic compounds. Table 22 gives the qualitative identifications. Aliphatic compounds do not appear to be significant.

7.3 LOW RESOLUTION FTIR OF COAL, ASH, AND TAR

The coal, ash, tar and other complex liquids or solids may be analyzed with minimal sample preparation to give general characteristics of the sample. The spectra contain information about both inorganic (sulfate, carbonate silicate) and organic constituents (aromatics, aliphatics, and carboxylates). Alternatively, the spectra may be used simply as a pattern characteristic of a specific sample class (e.g., coal rank).

Two coal samples have been thoroughly examined--Illinois No.6 and North Dakota lignite. The coal and resultant ash were finely milled and pressed into KBr pellets before their low resolution (8 cm^{-1}) spectra were collected. The tar was dissolved in CH_2Cl_2 and placed in a liquid solution cell to obtain its IR spectrum.

The spectra of the coal, tar, and ash from Zap lignite and Illinois No.6 coal are presented in Figures 12 through 14, respectively. A comparison of the spectra for the two coals is presented in Figure 12. The weak band at 3058 cm^{-1} in the Illinois No.6 spectra indicates greater aromaticity. The intensity of the shoulder at 1725 cm^{-1} on the major peak at 1610 cm^{-1} is indicative of the carbonyl content. Zap lignite appears to contain more carbonyl species. The peaks at 1095, 1035, 540, and 473 cm^{-1} in Illinois No.6 have been attributed to inorganics (*vide infra*). This would indicate that Illinois No.6 contains more inorganic species.

A comparison of the tar spectra for the two coals (Figure 13) indicates that the tars are remarkably similar. The major difference is the much higher aromatic content of the Illinois No.6 tar (3058 cm^{-1}).

The two ash spectra (Figure 14) are completely different. In the Zap lignite ash, the peaks at 1451 (strong), 880 (sharp peak at low end of broad "hump"), and 710 cm^{-1} (weak, sharp) have been tentatively assigned to a carbonate species. The peaks at 1190 (shoulder), 1109 (strong), and 622 cm^{-1} (medium, sharp) have been tentatively assigned to a sulfate species. In the

TABLE 22. COMPOUNDS IDENTIFIED IN XAD-2 SURGE SAMPLE FROM RUN 41

File No.*	Compound
11	Methyl chloride
15	Benzene
29	Toluene
42	m-Xylene (tent.)
49	o-Xylene (tent.)
56	Ethylbenzene (tent.)
62	1,3,5-Trimethylbenzene (tent.)
66	1,2,4-Trimethylbenzene (tent.)
71	Alkylbenzene
79	Phenol
89	Monosubstituted alkylbenzene (tent.)
94	Indan (tent.)
100	Indene
106	o-Cresol and p-cresol
113	m-Cresol
124	Alkylbenzene
129	2,6-Xylenol
131	2,4-Xylenol
142	Naphthalene
151	1-Methylnapthalene (tent.)
156	2-Methylnaphthalene (tent.)
161	Alkyl aromatic
165	Alkyl artomatic
170	Ester (background)
177	Dimethylnaphthalene isomer (tent.)
183	1,4-Dimethylnaphthalene (tent.)
201	d_{10}-Anthracene (std.)

*File numbers are located along x-axis of chemigram.

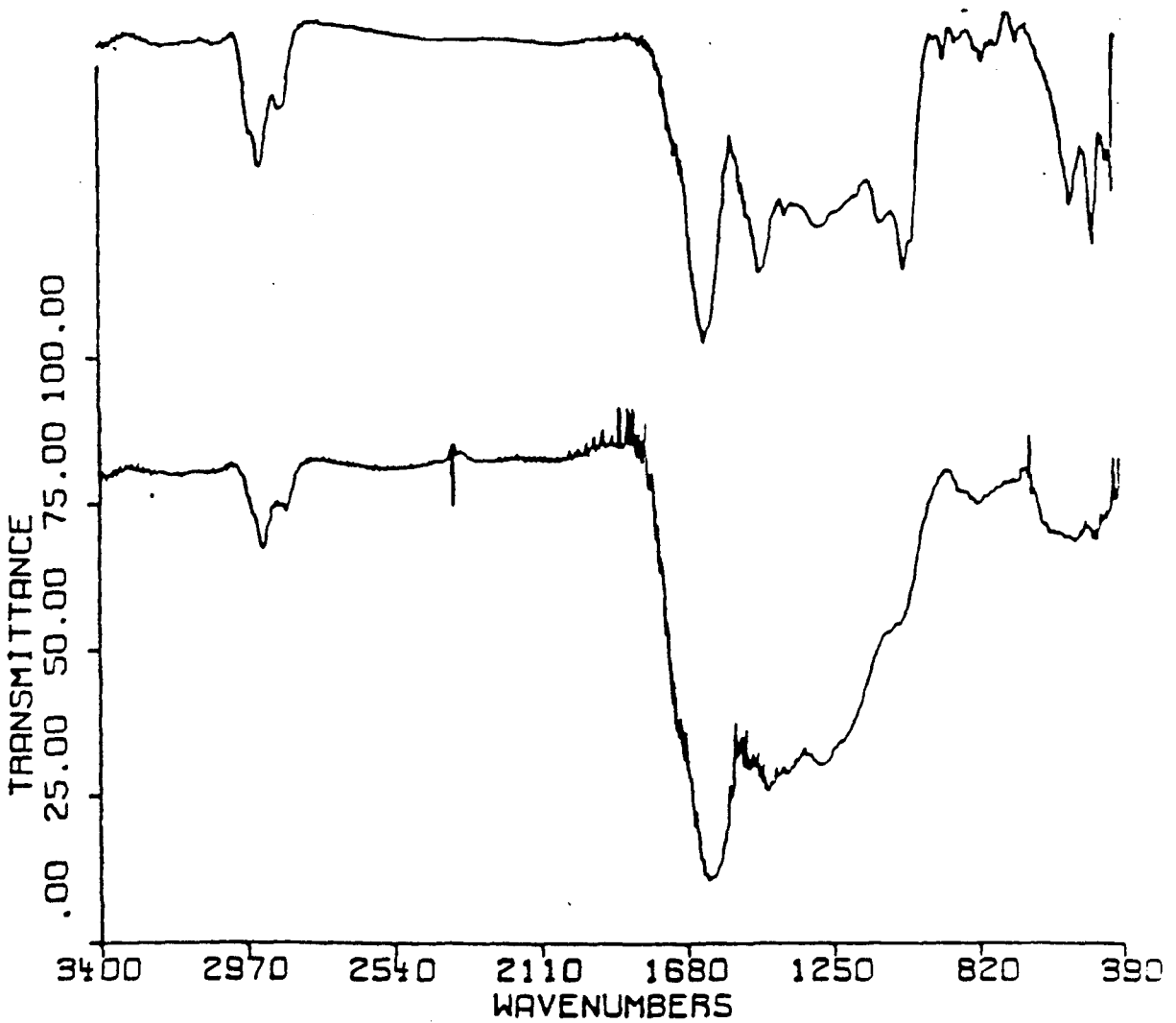

Figure 12. Comparison of coal spectra. Top = Illinois No.6; Bottom = Zap lignite.

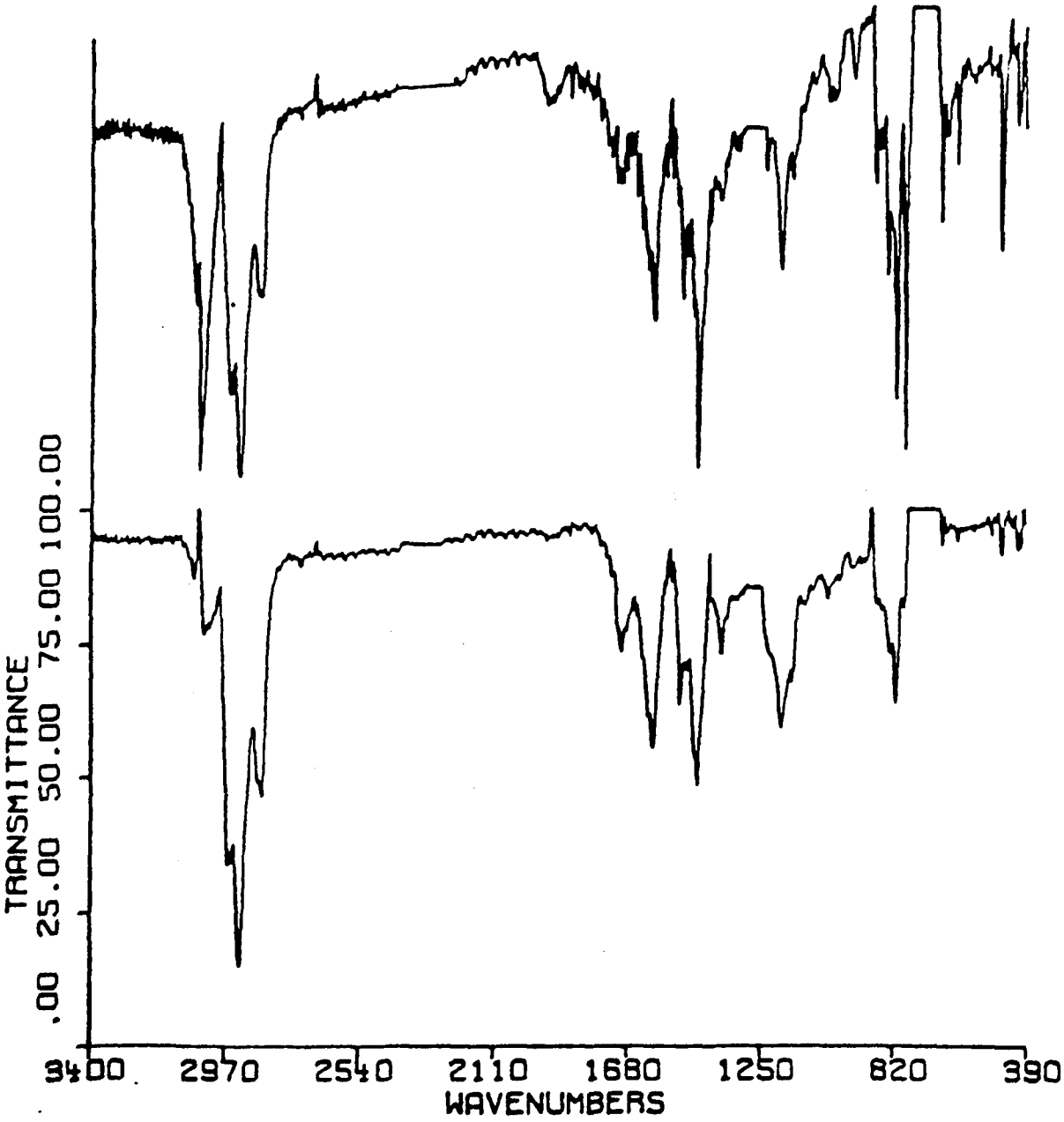

Figure 13. Comparison of tar spectra. Top = Illinois No.6; Bottom = Zap lignite.

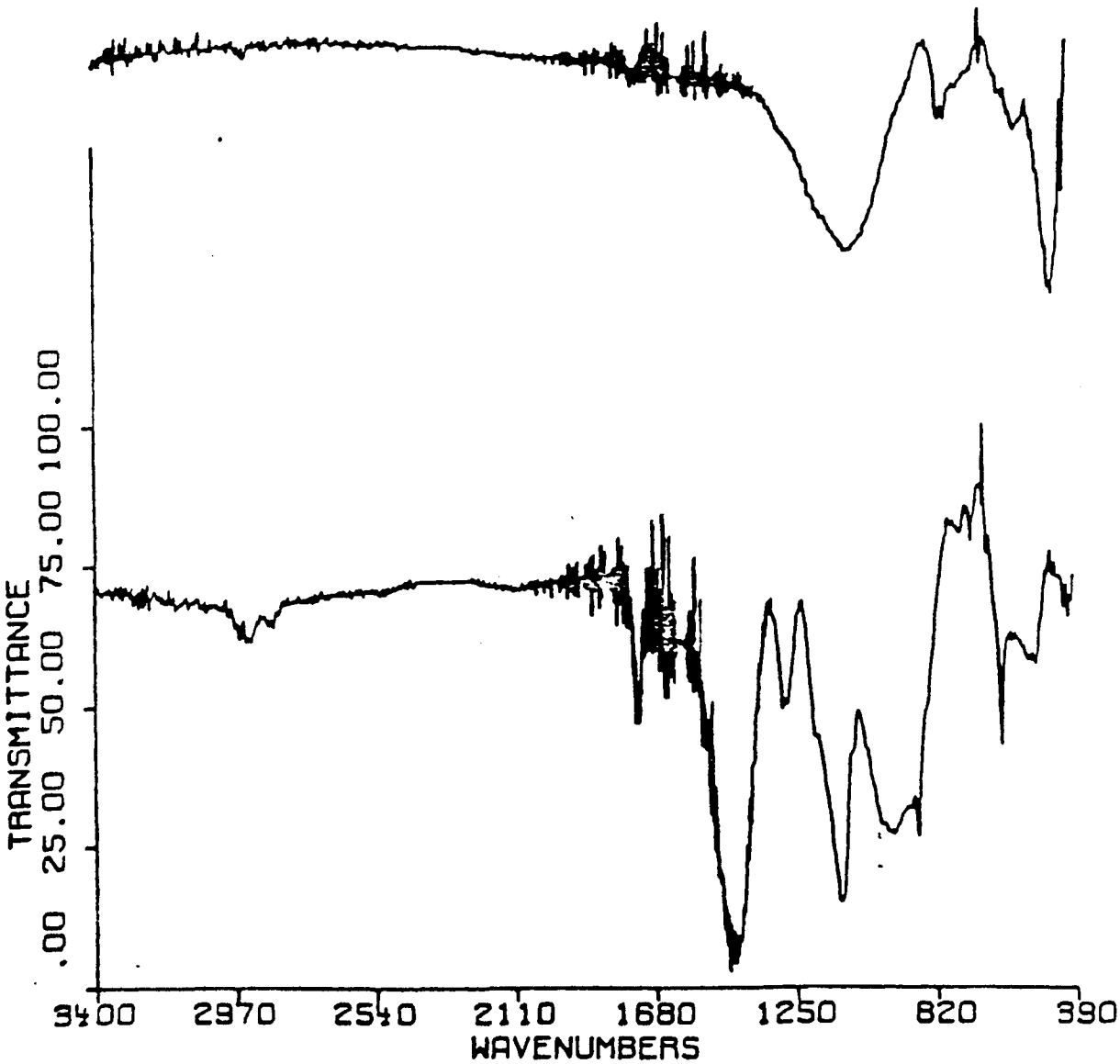

Figure 14. Comparison of ash spectra. Top = Illinois No.6; Bottom = Zap lignite.

Illinois No.6 ash, the broad hump at 1082 cm^{-1} and the small doublet at 790 cm^{-1} have been tentatively assigned to quartz.

In summary, FTIR appears to be a useful technique for solid, liquid and gaseous samples related to coal gasification. GC/FTIR is currently usable as a confirmatory technique to GC/MS. Further work is needed to compare GC/MS and GC/FTIR for class quantitation capability. High resolution FTIR of coal gas is useful for validation of routine GC analyses and also for analyses of certain compounds which cannot be determined by conventional GC detectors. Low resolution FTIR analyses of coal, tar and ash is under further investigation and its utility for such analyses needs to be fully assessed.

8.0 SPECIAL TECHNIQUES FOR ANALYSIS OF TARS AND AQUEOUS CONDENSATES

Of special importance is the characterization of the complex tar produced during coal gasification. In Section 5.0, various procedures for partitioning and analysis of tar and condensate were described. In this section, additional studies are described which were undertaken for further characterization of the liquid effluents. These include polynuclear aromatics (PNA) analysis using glass capillary gas chromatography, boiling range measurement using simulated GLC-distillation, class characterization using element specific detection and ion chromatographic analysis of the aqueous samples.

8.1 PNA ANALYSIS USING GLASS CAPILLARY GAS CHROMATOGRAPHY $(GC)^2$

$(GC)^2$ has been applied for quantitation of PNA materials in tar. A chemically bonded temperature stable (300°C) methyl-silicone capillary column was used. The conditions for analysis are shown in Table 23. The 'GROB' splitless[21] method of sample injection was used and approximately 5-15 μg were injected for detection of the heavier PNA's, e.g., benzo(g,h,i) perylene. The splitless technique consists of injecting 2 to 3 μl of the sample and then 30 seconds later, opening the splitter to remove the excess solvent. This prevents a long solvent tail as illustrated in the accompanying chromatogram (Figure 15) in which 21 PNA's have been identified based on retention times of standards. Table 24 shows the analysis of several compounds in the PNA fraction of the coal tar for three runs. A comparison is presented for a few compounds for which GC/MS data are available. At present, it is planned to use this temperature stable column in a GC/MS for confirmation of these compounds. In the future, the capillary-GC-FID technique will be routinely applied to PNA analyses of coal conversion tars and condensates.

TABLE 23. CONDITIONS FOR $(GC)^2$ ANALYSIS

Instrument:	Varian 3700 with all-glass capillary system.
Column:	High temperature OV-101, 25 m x 0.25 mm ID, WCOT, glass (obtained from Quadrex Corporation, New Haven, Connecticut).
Injector:	Splitless (GROB), solvent vented 30s after injection, 250°C
Detector:	FID 280°C
Oven:	40°C for 1 min, 4°C/min to 270°C and hold 40 min.
Carrier Gas:	Helium 1.25 ml/min
Makeup Gas:	Helium 29 ml/min
Hydrogen:	30 ml/min
Air:	300 ml/min

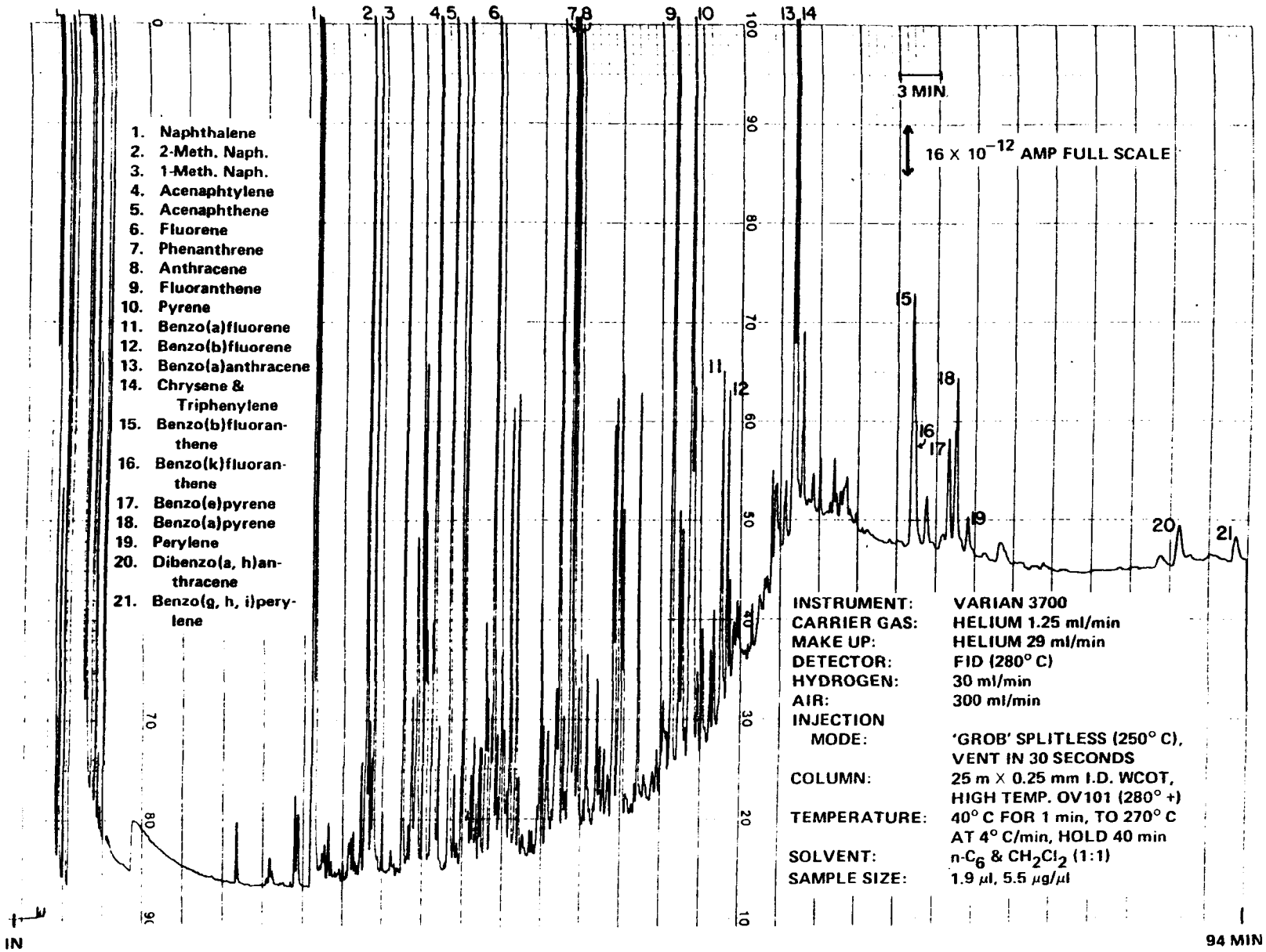

Figure 15. PNA fraction of coal gasification tar by capillary GC-FID: Determination of Selected PNA's.

TABLE 24. SELECTED COMPOUNDS IN PNA FRACTION AS WEIGHT % OF COAL GASIFICATION TAR (MS vs. capillary-FID)

Compound	Run 21		Run 23		Run 25	
	MS	Capillary-FID	MS	Capillary-FID	MS	Capillary-FID
Naphthalene*	5.73	2.91	2.70	1.73	1.30	2.51
Benzothiophene	--	0.53+	--	0.36+	--	0.17+
2-Methylnaphthalene	1.00	0.38	0.93	0.27	1.10	0.74
1-Methylnaphthalene	--	0.33	--	0.25	--	0.79
Biphenyl	--	0.26+	--	0.22+	--	0.29
C_2-Naphthalenes	--	1.07	--	0.74	--	1.57
Acenaphthylene*	--	1.15	--	1.09	--	1.80
Acenaphthene*	--	0.38	--	0.27	--	0.41
Dibenzofuran	0.74	0.60+	0.54	0.54+	0.57	0.78+
Fluorene*	0.80	0.63	0.48	0.56	0.78	1.22
Phenanthrene*	2.30	1.31	2.37	1.42	1.90	1.44
Anthracene*	--	0.47	0.76	0.49	0.66	0.55
Benzidine*	--	0.05+	--	0.06+	--	0.02+
Carbazole	--	0.12+	--	0.12+	--	0.26+
Fluoranthene*	1.30	0.91	1.40	0.79	1.10	0.74
Pyrene*	0.9	0.67	1.10	0.59	1.10	0.64
Benzo(a)fluorene	--	0.26	--	0.18	--	0.41
Benzo(b)fluorene	--	0.17	--	0.09	--	0.24
Benzo(a)anthracene*	--	0.47	--	0.28	--	0.70
Chrysene* + Triphenylene	0.80	0.46	0.87	0.32	0.78	0.62
Benzo(b)fluorenthene*	--	0.31	--	0.18	--	0.25
Benzo(k)fluoranthene*	--	0.16	--	0.09	--	0.12
Benzo(e)pyrene	--	0.21	--	0.12	--	0.19
Benzo(a)pyrene*	--	0.35	--	0.20	--	0.27
Perylene	--	0.09	0.38	0.05	0.29	0.07
Indeno(1,2,3-cd)pyrene*	--	0.14+	--	0.08+	--	0.17+
Dibenzo(a,h)anthracene*	--	0.28	--	0.16	--	0.34
Benzo(g,h,i)perylene	--	0.18	--	0.11	--	0.27

+Subject to corrections.

*Priority pollutant/consent decree compound.

8.2 SIMULATED GLC DISTILLATION OF TAR

The boiling point curves of tars produced from various screening and parametric tests were measured by a procedure based on ASTM D2887.[22] Briefly, the procedure consists of injecting a tar sample onto a column which separates the components on the basis of their boiling points. Retention times of standard hydrocarbons of known boiling points are used to divide the chromatogram into boiling point fractions and areas under the chromatogram for each fraction are measured. Two modifications of the procedure were carried out. Direct on-column injection was employed so that a low injector temperature could be used to prevent septum bleed. A problem with the ASTM procedure is column bleed during temperature programming, resulting in excessive baseline drift. To alleviate this, two identical columns were used on the sample and reference sides, respectively, of the thermal conductivity detector. Conditions for the simulated distillation are shown in Table 25.

Another drawback of the ASTM procedure is that the PNA's tend to elute faster from the column than normal hydrocarbons of similar boiling points. This tends to give lower results for boiling points of samples with substantial amounts of PNA materials. To correct for these deviations, it was necessary to determine deviations for several pure PNA's in the boiling range from 200-525°C. These are shown in Table 26. Using the data in Table 26, the results were corrected to give the actual boiling point distribution. Typical results for a tar from gasification of Illinois No.6 coal are shown in Table 27.

8.3 CLASS CHARACTERIZATION USING ELEMENT SPECIFIC DETECTORS

This study was only recently initiated and work is continuing. It is planned to characterize the tar and its various fractions using a nitrogen specific detector (NPD) and a sulfur specific detector (FPD). The objective is to determine if substantial amounts of heavier (3 ring or greater) nitrogen and sulfur compounds are present. The procedure will consist of using identical packed OV-101 columns (all glass system) with a FID, FPD, and an NPD with identical column conditions and carrier gas flow rate. The FID will indicate a response to all compounds present. With the use of standards, the chromatogram can be separated into two, three, four, five and six ring compounds. Then

TABLE 25. CONDITIONS FOR SIMULATED GLC DISTILLATION

Instrument:	Varian 3700
Detector:	TC (350°C)
Injector:	On-column 230°C
Column:	Two 4' x 1/8" S.S. (3% OV-101 on 80/100 Chromosorb HP)
Flow Rate:	30 ml/mm through each column (adjusted to produce a straight baseline during programming)
Temperature:	30°C to 310°C at 5°C/min
Sample:	Coal tar from gasification
Standard:	C_7-C_{40} normal hydrocarbons

TABLE 26. ERROR IN BOILING POINTS OF PNA'S AS PREDICTED BY THE PROCEDURE

Compound	Observed Boiling Point (°C)	Deviation from Actual Boiling Point (°C)
Naphthalene	207	11
2-Methylnaphthalene	227	14
1-Methylnaphthalene	229	16
Acenaphthylene	251	19
Acenaphthene	257	22
Fluorene	273	22
Phenanthrene	300	40
Anthracene	302	38
Fluoranthene	336	39
Pyrene	342	51
Chrysene	382	66
Benz(a)pyrene	419	84
Perylene	422	78
Coronene	447	78

TABLE 27. CORRECTED BOILING POINT DISTRIBUTION FOR TAR PRODUCED FROM GASIFICATION OF ILLINOIS NO.6 COAL (RUN 52)

Observed Boiling Range (°C)	Corrected Boiling Range (°C)	% Recovered (Cumulative)
0-100	4-97	0
100-150	97-150	1.9
150-200	150-207	18.9
200-250	207-272	35.9 (56.7)
250-300	272-338	15.5 (72.2)
300-350	338-404	19.6 (91.8)
350-400	404-469	5.4 (97.2)
400-450	469-555	1.6 (98.8)
450-500	555-599	1.0
500-550	599-659	0.2
550-600	659-715	0

the same sample will be injected onto the NPD and the FPD systems to give the amounts of nitrogen- and sulfur-containing compounds, respectively. Preliminary results for tars with the FPD have shown that greater than 90 percent of the sulfur compounds contain less than three rings. The information obtained from such studies is considered extremely useful in the characterization of complex materials such as tar.

8.4 ION CHROMATOGRAPHIC ANALYSIS OF AQUEOUS SAMPLES

The principle of an ion chromatograph has been discussed in detail elsewhere.[23] Using a Dionex ion chromatograph (IC) preliminary work has been carried out for characterization of various cations and anions in the aqueous condensate and scrubber samples. It has been found that the IC will be most suitable for the analysis of such ions as NH_4^+, Na^+, K^+, Cl^-, F^-, and $SO_4^=$ because of its cost effectiveness and accuracy. Additionally, various modifications in the standard eluent-column procedure will allow measurement of CN^-, SCN^-, and $S^=$. Typical results from IC have shown about 4 g/l of NH_3, 2 g/l of Cl^- and 0.02 g/l of F^- for gasification run 23.

REFERENCES

1. Cleland, J. G., et al. Pollutants from Synthetic Fuels Production: Facility Construction and Preliminary Tests. EPA-600/7-78-171, U. S. Environmental Protection Agency, Research Triangle Park, N. C., 1978.

2. Grohse, P. M., R. B. Denyszyn, and D. E. Wagoner. Sampling and Atomic Absorption Spectrometric Determination of Arsine at the 2 $\mu g/m^3$ Level. Anal. Chem., 50 (8): 1094-96, 1979.

3. Nichols, D. G., Pollutants from Synthetic Fuels Production. Quarterly Report, EPA Grant No. R804979-03, RTI/1700/00-01Q, 1979.

4. Gangwal, S. K., and D. E. Wagoner. Response Correlation of Low Molecular Weight Sulfur Compounds Using a Novel Flame Photometric Detector. J. Chromatogr. Sci., 17 (4): 196-201, 1979.

5. Gangwal, S. K., et al. Analysis of a Semibatch Coal Gasifier Product Gas Using an Automated Gas Chromatograph. J. Chromatogr. Sci., 16 (8): 368-71, 1978.

6. Gangwal, S. K., et al. A Sampling and Analysis Procedure for Gaseous Sulfur Compounds from Fossil Fuel Conversion. Paper presented at the EPA Oil Shale Sampling, Analysis and Quality Assurance Symposium, Denver, CO, March 26-28, 1979. Proceedings to appear.

7. Brodey, S. S., and J. E. Chaney. Flame Photometric Detector: The Application of a Specific Detector to Phosphorus and Sulfur Compound Sensitive to Subnanogram Quantities. J. Gas Chrom., 4: 42, 1960.

8. Patterson, P. L., R. L. Howe, and A. Abu-Shumays. Dual-Flame Photometric Detector for Sulfur and Phosphorus Compounds in Gas Chromatographic Effluents. Anal. Chem., 50: 339, 1978.

9. Sharkey, A. G. Carcinogenesis, Vol. 1, Polynuclear Aromatic Hydrocarbon Chemistry, Metabolism and Carcinogenesis. R. I. Freudent and P. W. Jones, ed., Raven Press, 1976.

10. Schiller, J. E., and D. Mathiason. Separation Methods for Coal Derived Solids and Heavy Liquids. Anal. Chem., 49: 1225, 1977.

11. Snook, M. E., W. Chamblain, R. F. Severson, and O. Chortyk. Chromatographic Concentration of Polynuclear Aromatic Hydrocarbons of Tobacco Smoke. Anal. Chem., 47: 1155, 1975.

12. Novotny, M., M. L. Lee, and K. Bartle. Methods of Fractionation, Analytical Separation and Identification of Polynuclear Aromatic Hydrocarbons in Complex Mixtures. J. Chromatogr. Sci., 12: 606, 1974.

13. Eight Peak Index of Mass Spectra, Vol.I (Tables 1 & 2), Vol.II (Table 3). Mass Spectrometry Data Center, AWRE, Aldermaston, Reading, U. K., 1970.

14. Parr Bomb Combustion of Sample with High Organic Content, Chapter 7, EPA-600/2-76-160, U. S. Environmental Protection Agency, 1976, 86 pp.

15. Parker, C. R. Water Analysis by Atomic Absorption, Varian Techtron Pty Ltd., Springvale, Australia, 1972.

16. Aruscauage, P. Determination of Arsenic, Antimony and Selenium in Coal by Atomic Absorption Spectrometry with a Graphite Tube Atomizer. Journal Research U.S. Geological Survey, 5 (4): 405, 1977.

17. Bosshart, R. E. Determination of Arsenic, Selenium and Antimony in Coal, Coal Ash, and Coal Refuse Materials by Hydride Generation-Atomic Absorption. Bituminous Coal Research, Inc., December 1977.

18. Pradhan, N. K. Coal and Petroleum Analysis by Atomic Absorption. Varian Techntron Pty Ltd., Springvale, Australia, March 1976.

19. Gluskoter, H. J., et al. Trace Elements in Coal: Occurrence and Distribution. EPA-600/6-77-064, U. S. Environmental Protection Agency, Washington, D. C., 1976.

20. Attari, A. Fate of Trace Constituents of Coal during Gasification. EPA-650/2-73-004, U. S. Environmental Protection Agency, Washington, D. C., 1973.

21. Grob, K., and G. Grob. Splitless Injection in Capillary Columns. J. Chromatogr. Sci., 7: 584-590, 1969.

22. Standard Test Method for Boiling Range Distribution of Petroleum Fractions by Gas Chromatography, ASTM D 2887, 1973.

23. Small, H., T. S. Stevens, and W. C. Bauman. Novel Ion Exchange Chromatographic Method Using a Conductometric Determination. Anal. Chem., 17 (11): 1801, 1975.

24. Pellizzari, E. D., et al. Collection and Analysis of Trace Organic Vapor Pollutants in Ambient Atmospheres. I. A Technique for Evaluating the Concentration of Vapors by Sorbent Media. J. Environ. Sci. Tech., 9: 552, 1975.

25. Pellizzari, E. D., et al. Collection and Analysis of Organic Vapor Pollutants in Ambient Atmospheres. II. Studies on Thermal Desorption of Organic Vapor from Sorbent Media. J. Environ. Sci. Tech., 9: 556, 1975.

26. Pellizzari, E. D.., et al. Collection and Analysis of Trace Organic Vapor Pollutants in Ambient Atmospheres. The Performance of a Tenax-GC Cartridge Sample for Hazardous Vapors. Anal. Letters, 9: 45, 1976.

27. Pellizzari, E. D. Analysis of Trace Hazardous Organic Vapor Pollutants in Ambient Atmospheres. Anal. Chem., 48: 803, 1976.

APPENDIX I

SELECTION AND PREPARATION OF POLYMERIC SORBENTS

At the initiation of this effort various alternative sampling methods for vapors were considered and eliminated using two major criteria for evaluation: (1) the broadest possible range of organic vapors be collected, and (2) a minimum of artifacts be produced in the sample. Other criteria which were considered included level of sample recovery and ease of interfacing with the instrument system. Cryogenic trapping was eliminated on several criteria, especially on artifact production. If the mechanics of cooling the product gases were not difficult in themselves, the sample would be subject to extreme vulnerability to artifact formation--collected as a liquid and/or solid sample with large quantities of water. The condensed water would serve to collect both acidic and basic inorganic gases (NH_3, HCl, HF, HCN, NO_x...) which might result in artifact formation. Similar problems occur with impingers and the range of volatility of the sample collected would be limited. (Among the sorbents used for collection of organics, polymeric sorbents cause the fewest artifacts and cover the broadest volatility range.) Two polymeric sorbents, Tenax-GC and Amberlite XAD-2, were used in this program in a sampling strategy which allowed them to complement each other.

At the initiation of this study a significant body of information on the performance of Tenax-GC for trace organic analysis especially in ambient air existed.[24-27] It was clear from these data that artifacts were at a minimum for trace analysis but that artifacts could occur at higher concentrations. The collection efficiency and breakthrough volume needed to be verified at high concentrations and the implications of displacement chromatography needed to be defined in order to transfer the sampling technology from trace analysis to process stream analysis.

The complementary nature of the two sorbents is a function of the basic physical properties of the two sorbents. Tenax-GC is a highly temperature stable polymer of poly(2,6-diphenyl-p-phenylene oxide) with a surface area of 30 m^2/g (60-80 mesh). The thermal stability of Tenax allows the collected sample to be recovered thermally without the introduction of any solvent. In addition, Tenax has a very low affinity for water and most inorganic gases in comparison to organic vapors. This results in fewer artifacts being created as a result of the sample method. The major limitations to the use of Tenax as a sorbent for sampling process streams is its low surface area which translates into low capacity and high cost. XAD-2 on the other hand, has a surface area of 300 m^3/g and costs approximately 1/50 as much as Tenax. The performance of XAD-2 is somewhat inferior in two areas, (1) its lack of thermal stability precludes thermal desorption, and (2) it has a significant affinity for water and possibly inorganic gases.

Given the properties of the sorbents, the sampling approach taken was to place XAD-2 in the larger in-line traps with valving to place each on-line separately. Sampling ports were installed upstream and downstream of these traps to monitor their performance with small Tenax samples.

Tenax GC is prepared by Soxhlet extraction with methanol and then pentane, for 22 hours each. The gross amounts of solvent are removed under vacuum at elevated temperatures. The sorbent is then packed into the glass cartridges with glass wool plugs in both ends. Within two weeks of sampling the cartridges are thermally desorbed at ca. 275°C under helium purge to remove any trace organics. The cartridges are sealed in screw cap centrifuge tubes with teflon cap liners.

XAD-2 is prepared by a multisolvent extraction sequence of water, methanol, and methylene chloride. First it is soaked in deionized water, the excess water decanted, and the resulting slurry poured into a 90 x 200 mm cellulose thimble. A plug of glass wool is then placed on top of the thimble and then two thimbles stacked in the Soxhlet. The XAD-2 is then extracted with each solvent in the series for 22 hours and the resin dried in a vacuum oven with mild heat for 48 hours.

APPENDIX II
TENAX AND XAD-2 ANALYSIS WITH GC/MS/COMPUTER

Gas chromatography/mass spectrometry/computer (GC/MS/COMP) systems using high resolution capillary columns is used for the analysis of the Tenax samples, the XAD-2 extracts and the glass fiber filter extracts. This approach permits both qualitative identification of species collected and their quantitative estimation. Since all of the data acquisition and handling is done by the computer and the data stored as a permanent file, retrospective searches are possible. In the early stages of this work complete qualitative interpretations of each sample were performed before selecting specific compounds for quantitation. As data accumulated, certain compounds and classes of compounds were selected for routine quantitation. Described below are procedures used for analysis of Tenax samples and XAD-2 extracts.

Tenax--The organics adsorbed on Tenax were recovered by thermal desorption which permitted the entire sample to be introduced into a gas chromatography column. Two internal standards (perfluorobenzene and perfluorotoluene) were added prior to the desorption step. The inlet-manifold (Figure 16) for introducing the sample into the analytical instruments consisted of four main components: a desorption chamber; a six-port, two-position high temperature, low-volume valve; a gold-plated nickel capillary trap; and a temperature controller.

The sampling system inlet-manifold is used for recovering vapors trapped on Tenax-GC cartridges and is interfaced to the GC/MS/COMP system (Figure 17). The desorbed vapors are subsequently resolved by gas/liquid chromatography and mass cracking patterns automatically and continuously obtained through the GC run with a Varian CH-7 mass spectrometer. Operating parameters are those depicted in Table 28 for the GC/MS/COMP system for the analysis of volatile organic fractions.

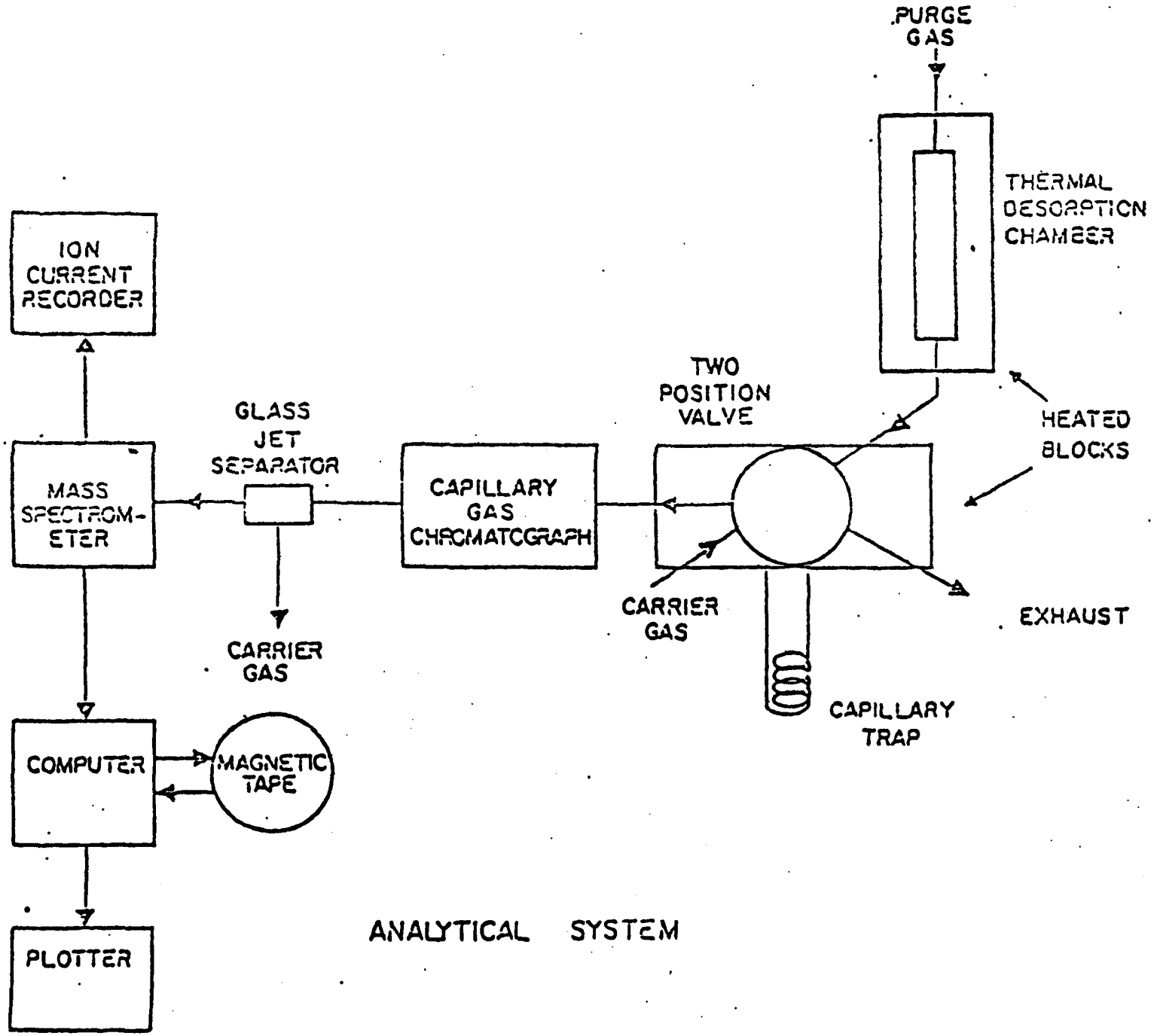

Figure 16. Analytical systems for organic vapors in gas samples.

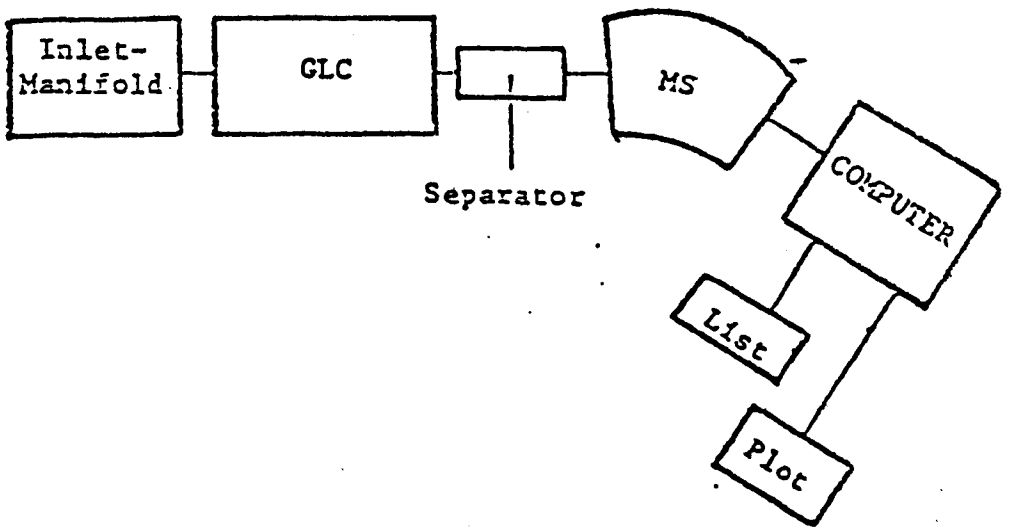

Figure 17. Gas liquid chromatograph-mass spectrometer computer (GC/MS/COMP) layout.

TABLE 28. OPERATING PARAMETERS FOR GLC/MS/COMP SYSTEM

Parameter	Setting
Inlet-manifold	
desorption chamber	260°C
valve	180°C
capillary trap-minimum	-195°C
maximum	+175°C
thermal desorption time	10 min
GC	
95M SE30 SCOT capillary columns	20°C, 4/C°/min
carrier (He) flow	3 ml/min
transfer line to ms	210°C
MS	
scan range	m/e 20 - 300
scan rate, automatic-cycle	1 sec/decade
filament current	300 A
multiplier	6.0
ion source vacuum	4×10^{-6} torr

The mass spectrometer is first set to operate in the repetitive scanning mode. In this mode the magnet is automatically scanned exponentially upward from low mass to high mass values. Although the scan range could be varied depending on the particular sample, values used are from m/z 20 to m/z 300. The scan is completed in approximately 5 seconds. At this time the instrument automatically resets itself to the low mass and the run is suitable for further processing, since it gives some idea of the number of unknowns in the sample and the resolution obtained using the particular GC conditions.

The next stage of the processing involves the conversion of the spectral peak times to peak masses. To accomplish this, the spectra are read successively into the Varia computer core and then sent at high speed to the PDP/8 disk by means of the intercomputer interface. Depending on the number of peaks in each spectrum, the disk capacity allows the storage of 200-500 spectra. Spectra containing time information are stored on the disk, and the data are returned to an off-line digital computer (IBM 620-i) for mass conversion by use of the calibration table obtained previously. Normally one set of calibration data is sufficient for an entire day's data processing since the characteristics of the Hall probe are such that the variation in calibration is less than 0.2 atomic mass units per day. Very long runs may require several cycles of mass conversion using the PDP/8 disk to complete the data processing.

After spectra are obtained in mass-conversion form, full spectra of scans from the GC run were recorded on the Statos plotter. The total ion current (TIC) information available at this time are most useful for deciding which spectra are to be analyzed. At the beginning of the run where peaks are very sharp, nearly every spectrum is inspected individually. Later in the run when the peaks are broader, only selected scans are analyzed.

Identification of resolved components is achieved by comparing the mass cracking patterns of the unknown mass spectra to an eight major peak index of mass spectra. Particular note is made of the boiling point of the identified compounds as a function of the elution temperature and the order of elution of constituents in homologous series, since the SE-30 capillary column separates primarily on the basis of boiling point.

XAD-2 -- The organics sorbed on the XAD-2 resin and glass fiber filter are recovered by solvent extraction with methylene chloride. The extract is evaporated from ca. 150 ml to 0.5 to 1.0 using a Kaderna-Danish (K-D) evaporator and a micro K-D evaporator. The internal standards, d_{10}-anthracene, d_5-phenol and p-chlorotoluene, are added and the extract is ready for GC/MS/COMP analysis. Weighed portions of the XAD from the integrated samples are placed in a thimble and extracted as above. In this case, only a portion (4 ml of 150 ml) of the extract is evaporated to 1 ml and the internal standard added.

The XAD extracts are analyzed on the LKB 2091 GC/MS/COMP system. The operating parameters are listed in Table 29.

The mass spectrometer is set to operate in the repetitive scanning mode. In this mode the magnet is automatically scanned exponentially upward from low mass to high mass values. Although the scan range can be varied depending on the particular samples, values used are from approximately m/z 40 to m/z 500. The scan is completed in approximately 1 second. At this time the instrument automatically reset itself to the low mass position in preparation for the next scan, and the information is accumulated by an on-line PDP-11/04 computer onto disk. The reset period requires approximately 1.4 seconds. Thus, a continuous cycle of 2.4 seconds is maintained.

The sample is injected and automatic data acquisition is initiated just before elution of the first component. As each spectrum is acquired by the computer, each peak that exceeds a preset threshold is recognized and recorded by mass and intensity. This information is stored on the disk as the scan is in progress. In addition, TIC values are stored as they are acquired. This procedure continues until the entire GC run is completed. By this time, there are from 1500-2000 spectra on disk, which are then used for subsequent or simultaneous data processing. The data are also recorded on 9-track magnetic tape for archiving or for subsequent data processing.

The mass spectral data are processed in the following manner. First, the original spectra are scanned, and TIC information extracted. This is taken directly from the disk after data acquisition. Then the TIC intensities are plotted against the spectrum number of a Versatec electrostatic printer/plotter. The information thus gained generally indicates whether the run is suitable for further processing, since it gives some idea of the number of unknowns in

TABLE 29. OPERATING PARAMETERS FOR LKB 2091 GLC/MS/COMP SYSTEM

Parameter	Setting
Inlet	
Split ratio	10:1
Injector Temp	260°C
Injection Size	1ℓ
GC	
15 M SE 30 WCOT glass capillary columns	
carrier (He) flow	2.5 ml/min
programming conditions	70°C for 6 min, 8°/min to 250°C
separator temperature	200°C
MS	
scan range	m/z 40 - 500
scan rate, automatic-cycle	2.4 sec/cycle
trap current	50 A
multiplier	350
ion source vacuum	10^{-6} torr

the sample and the resolution obtained using the particular GC conditions. Full spectra of scans from the GC run are recorded on the Versatec plotter. The TIC information available at that time is most useful for deciding which spectra are to be analyzed. At the beginning of the analysis where peaks are very sharp, nearly every spectrum is inspected individually. Later in the run when the peaks are broader, only selected scans are analyzed.

Identification of resolved components is achieved by comparing the fragmentation patterns of the unknown mass spectra to an eight major peak index of mass spectra. Particular note is made of the boiling point of the identified compounds with the elution temperature and the order of constituents in homologous series since the SE-30 WCOT capillary separates primarily on the basis of boiling point.

APPENDIX III

QUALITATIVE GC/MS RESULTS FOR ORGANIC VAPORS AND TAR FRACTIONS

Sample results are included in this Appendix for the chemical compounds which were identified in the XAD cartridges and the tar condensate. These results are presented for screening test run 21. The tar condensate was solvent-partitioned prior to analysis, the procedure for which is described in detail in this report (see Section 5.2). Substantial progress has been made over the course of this project in the quantitative determination of the specific compounds which are potentially hazardous, including consent decree compounds.

TABLE 30. GC/MS ANALYSIS OF POLYNUCLEAR AROMATICS FROM RUN 21 -QUALITATIVE RESULTS-

Chromatographic Peak No.	Elution Temp. (°C)	Compound
1	123	methyl indene isomers
2	127	naphthalene
2a	129	2,3-benzothiophene
3	132	2-ethyl benzimidazole (tentative)
4	144	methyl naphthalene isomer
4a	145	5-methyl-2,3-benzothiophene
5	146	methyl naphthalene isomer
6	156	biphenyl
7	158	1- or 2-ethyl naphthalene
8	160	dimethyl naphthalene isomer
9	162	dimethyl naphthalene isomer
10	165	1- or 2-ethyl naphthalene
11	166	biphenylene
12	171	acenaphthene
13	175	dibenzofuran
13a	178	1,3-dihydro-4,6-dimethylthieno (3,4-c)thiopehe (tentative)
14	182	methyl acenaphthylene isomer
15	185	fluorene
16	187	methyl acenaphthylene isomer
17	190	hydroxy fluorene isomer
18	192	hydroxy fluorene isomer
19	200	1-methyl fluorene
20	200	9-fluorenone
21	205	2-methoxyfluorene
22	206	dibenzothiophene isomer
23	210	anthracene
23a	212	phenanthrene
24	213	benzidine
24a	214	dibenzothiophene isomer
25	219	1-methylbenzo(1,2-b:4,3-b)dithiophene
26	222	3-methyldibenzothiophene
27	223	carbazole
28	224	methyl phenanthrene isomer
29	227	4,5-methylene phenanthrene
29a	228	methyl phenanthrene isomer
30	232	2,2'-dicyanobiphenyl
31	238-242	dimethyl phenanthrene isomers
32	243-246	fluoranthene and/or 1,2,3,4-tetrahydrofluoranthene
33	248	2-nitro dimethyl terephthalate
34	249-250	pyrene and/or 1,2,3,4-tetrahydrofluoranthene
35	259-265	benzofluorenone isomers and/or methyl pyrene isomers
36	265	naphtho(1,2-b)thianaphthene
37	265	2,3-benzanthracene
38	265	benzphenanthrene isomers and triphenylene
38a	265	methylbenz(a)anthracene isoamrs
38b	265	methyl chrysene isomer
38c	265	methylbenzophenanthrene isomers
38d	265	dihydroxy anthraquinone isomers
39	265	perylene
39a	265	benzpyrene

TABLE 31. GC/MS ANALYSIS OF NONPOLAR NEUTRALS FROM RUN 21
-QUALITATIVE RESULTS-

Chromatographic Peak No.	Elution Temp. (°C)	Compound
4	66	indene
5	72	saturated hydrocarbons
6	73	saturated hydrocarbons
7	74	saturated hydrocarbons
8	76	C_4-cyclohexane or methylcyclohexylcyclohexane
9	76	C_5-thiophene (tentative)
10	78	nor-undecane
11	81	saturated hydrocarbon
12	82	dimethylstyrene or methylindan
13	83	saturated hydrocarbon
14	83	dicyclohexylbutane
		n-pentylcyclohexane (tentative)
16	86	$C_{12}H_{21}$ isomer
17	88	naphthalene
18	89	thianaphthene, dimethylindan
19	91	C_5-benzene
20	94	n-dodecane
21	96	cyclohexylbenzene
22	99	dimethylindan
23	101	dimethylindan
24	103	dimethylindan
25	105	methylnaphthalene
26	108	methylthianaphthene
		methylnaphthalene
27	108	trimethylindan
28	110	trimethylindan, tetramethylindan or
		5,8-dimethyl-1-n-octyl-1,2,3,4-
		tetrahydronaphthalene
29	113	1-methyl-4-n-heptyl-1,2,3,4-tetra-
		hydronaphthalene or
		dimethyltetrahydronaphthalene or
		trimethylindan
30	117	biphenyl
31	119	dimethylthiaindene
32	120	ethylnaphthalene
34	121	dimethylnaphthalene
35	122	dimethylnaphthalene
36	126	dimethylnaphthalene
37	127	biphenylene, dimethylnaphthalene
39	131	acenaphthene
40	132	methylbiphenyl
41	133	trimethylthiaindene
42	135	C_3-naphthalene, dibenzofuran
43	136	pentamethyldihydroindene
44	137	m-phenylphenol
47	144	fluorene
48	147	biphenylmethane
		C_3-naphthalene (tentative)
50	149	hydroxyfluorene
51	152	hydroxyfluorene
55	160	1,1-diphenylethene
58	163	2-methoxyfluorene
		acridone or phenanthridone
		1,1-di-(4-methylphenyl)dodecane
59	165	dibenzothiophene
60	166	phenanthracene
61	169	d_{10}-anthracene
62	170	anthracene
64	173	dihydromethylphenylbenzofuran
66	178	dibenzoheptafulvene
67	179	methyldibenzothiophene
68	182	methylphenanthrene
69	184	4,5-methylenephenanthracene
70	185	saturated hydrocarbon
71	187	phthalate
72	190	$C_{16}H_{12}$ isomer or
		2,2'-dicyanobiphenyl
73	195	dimethylphenanthrene
74	195	saturated hydrocarbon
75	199	fluoranthene
76	205	pyrene
77	206	saturated hydrocarbon
78	214	$C_{17}H_{12}$ isomer
79	216	$C_{17}H_{12}$ isomer
80	219	saturated hydrocarbon
81	228	phthalate
82	234	saturated hydrocarbon
83	237	unsaturated hydrocarbon (tentative)
84	253	saturated hydrocarbons
85	255	$C_{18}H_{12}$ isomer
86	257	$C_{18}H_{12}$ isomer (tentative)
87	261	$C_{18}H_{12}$ isomer
88	265	phthalates

TABLE 32. GC/MS ANALYSIS OF TAR BASES FROM RUN 21 - QUALITATIVE RESULTS-

Chromatographic Peak No.	Elution Temp. (°C)	Compound	Chromatographic Peak No.	Elution Temp. (°C)	Compound
1	100.0	toluene	15	164.0	dimethylquinoline isomer
3	100.0	dimethyl pyridine isomer	16	171.2	dimethyl quinoline isomer
4	100.0	dimethyl pyridine isomer	17	174.4	diphenyl amine
5	103.6	trimethyl pyridine isomer	18	184.4	alpha naphthyl amine
6	110.4	2,4-dimethyl-6-ethylpyridine	19	190.4	carbazole
7	112.4	toluidine isomer and/or benzyl amine	19a	200.0	xanthene
			19b	200.0	9-methyl carbazole
7a	113.2	C_2-alkyl pyridine isomer	19c	206.8	methyl carbazole isomer
7b	124.8	methyl ethyl pyridine isomer	19d	207.6	methyl carbazole isomer
7c	125.6	n-methyl-o-toluidine	20	210.8	7,8-benzoquinoline
8	133.6-135.6	quinoline	21	215.6	benzoquinoline isomer
9	138.0-141.2	isoquinoline	22	218.0	3-methylbenzoquinoline
10	144.4	methyl quinoline isomer	23	219.6	acridine
10a	146.0	methyl quinoline isomer	23a	223.2	methyl benzoquinoline isomer
10b	148.0	methyl quinoline isomer	23b	224.4	methyl benzoquinoline isomer
11	150.8	methyl quinoline isomer	24	226.0	phenyl indole isomer
12	154.4	methyl quinoline isomer	25	230.0	dimethylacridine isomer
12a	155.2	ethyl quinoline isomer	25a	236.8	methyl phenyl indole isomer
13	158.4	ethyl quinoline isomer	25b	240.8	methyl phynyl indole isomer
14	161.2	dimethyl quinoline isomer			

TABLE 33. GC/MS ANALYSIS OF STEADY-STATE XAD-2 EXTRACT FROM RUN 21 -QUALITATIVE RESULTS-

Chromatographic Peak No.	Elution Temp. (°C)	Compound	Chromatographic Peak No.	Elution Temp. (°C)	Compound
1a	60°	unknown	8a	105°	methylbenzofuran isomer
2	60°	toluene	8b	108°	C_4H_7-benzene
2a	60°	methylthiophene isomer	8c	111°	cresol isomer
2b	60°	hydrocarbon	8d	116°	methyl indene isomer
2c	60°	C_2-benzene isomer ethyl	8e	118°	cresol isomer
3	60°	xylene isomer	9	122°	naphthalene
4	60°	C_8H_8 isomer styrene	9a	124°	benzothiophene isomer
5	60°	xylene isomer	9b	127°	C_2-phenol
5a	60°	hydrocarbon	10	145°	β-methylnaphthalene
5b	62°	C_3-benzene isomer	10a	147°	methyl benzothiophene isomer
5c	64°	C_3-benzene isomer	10b	148°	α-methylnaphthalene
5d	71°	benzofuran	10c	160°	biphenyl
5e	72°	C_3-benzene isomer	10d	164°	dimethylnaphthalene isomer
5f	81°	C_3-benzene isomer	10e	171°	$C_{12}H_{18}$ isomer
5g	85°	indan	11	177°	C_2-biphenyl isomer
6	87°	indene	11a	182°	dibenzofuran (tent)
6a	90°	diethylbenzene isomer	11b	190°	$C_{17}H_{14}$ isomer
6b	92°	diethylbenzene isomer	12	200°	$C_{16}H_{18}$ isomer (tent)
6c	96°	phenol (tent)	13	204°	$C_{16}H_{18}$ isomer (tent)
7	100°	C_4H_7-benzene isomer	14	218°	D_{10} anthracene ■
8	102°	C_4H_7-benzene isomer	14a	224°	$C_{18}H_{22}$ isomer

TABLE 34. GC/MS ANALYSIS OF SURGE XAD-2 EXTRACT FROM RUN 21
-QUALITATIVE RESULTS-

Chromatographic Peak No.	Elution Temp. (°C)	Compound
1	60°	methylene chloride (bkg)
1a	60°	1,1,1-trichloroethane
2	60°	benzene
2a	60°	thiophene
3	60°	cyclohexene
3a	60°	C_7H_{14} isomer (tent)
3b	60°	C_7H_{12} isomer
3c	60°	C_7H_{10} isomer
3d	60°	C_7H_{12} isomer
4	60°	toluene
4a	60°	methylthiophene isomer
4b	60°	C_8H_{16} isomer
4c	60°	C_8H_{16} isomer
4d	60°	C_8H_{14} isomer
4e	60°	C_8H_{18} isomer
4f	60°	C_8H_{14} isomer
4g	60°	C_8H_{14} isomer
4h	60°	C_8H_{14} isomer
4i	60°	C_8H_{14} isomer
4j	60°	C_8H_{16} isomer
4k	60°	C_8H_{14} isomer
4l	60°	C_9H_{18} isomer (tent)
4m	60°	C_9H_{18} and C_8H_{14} isomers
5	60°	ethylbenzene
5a	60°	ethylthiophene isomer
6	60°	dimethylbenzene isomer
6a	60°	dimethylthiophene isomer
6b	60°	C_2-thiophene isomer
7	60°	C_8H_8 isomer styrene
8	60°	dimethylbenzene isomer
8a	60°	C_9H_{20} isomer
8b	60°	C_9H_{18} isomer (tent)
8c	60°	C_9H_{16} isomer (tent)
8d	60°	C_3-benzene isomer
8e	60°	C_9H_{16} isomer
8f	60°	C_9H_{18} isomer
8g	60°	saturated hydrocarbon
8h	60°	n-propylbenzene
8i	60.1°	C_3-benzene isomer
8j	62.7°	C_3-thiophene isomer
8k	63.5°	C_3-benzene isomer
8l	63.9°	C_3-thiophene isomer
8m	65.9°	C_3-benzene isomer
8n	67.1°	C_3-thiophene isomer
8o	68.3°	saturated hydrocarbon
8p	70.3°	benzofuran
9	71.5°	C_3-benzene isomer
9a	72.3°	methylstyrene isomer
9b	75.1°	$C_{10}H_{20}$ isomer
9c	78.7°	$C_{10}H_{22}$ isomer
9d	80.3°	C_3-benzene isomer
9e	81.1°	C_4-benzene isomer
9f	83.5°	indan
10	85.5°	indene
10a	89.1°	diethylbenzene isomer
10b	91.1°	diethylbenzene isomer
10c	93.1°	phenol
10d	97.5°	C_4-benzene isomer
11	98.3°	C_4H_7-benzene isomer
11a	100.7°	C_4H_7-benzene isomer
11b	102.7°	methylbenzofuran isomer
11c	103.1°	methylbenzofuran isomer
11d	107.1°	C_4H_{24} isomer
11e	108.3°	cresol isomer
11f	111.5°	methyl-(2,3-dihydroindene) isomer
11g	113.1°	cresol isomer
11h	113.5°	methylindene isomer
11i	114.3°	cresol and methylindene isomers
12	119.9°	naphthalene
12a	121.9°	benzothiophene
12b	123.9°	C_2-phenol isomer
12c	127.9°	2-ethylbenzimidazole (tent)
12d	128.7°	$C_{12}H_{26}$ isomer
12e	121.9°	saturated hydrocarbon
12f	141.9°	β-methyl-naphthalene
12g	144.7°	α-methyl-naphthalene
12h	146.7°	$C_{13}H_{23}$ isomer
12i	156.3°	biphenyl
12j	167.5°	$C_{12}H_8$ isomer
12k	171.9°	acenaphthene
12l	172.7°	diphenylethane
12m	177.5°	dibenzofuran
12n	186.7°	fluorene
12o	189.1°	$C_{15}H_{16}$ isomer (tent)
12p	198.7°	$C_{14}H_{30}$ isomer (tent)
12q	199.1°	$C_{16}H_{18}$ isomer
12r	209.1°	dibenzothiophene (tent)
12s	212.3°	phenanthrene
13	213.1°	D_{10} anthracene (ℓ)
13a	218.7°	$C_{18}H_{22}$ isomer
13b	229.9°	methylphenanthrene isomer
13c	245.1°	$C_{16}H_{10}$ isomer

TABLE 35. GC/MS ANALYSIS OF GLASS FIBER FILTER EXTRACT FROM RUN 21
-QUALITATIVE RESULTS-

Chromatographic Peak No.	Elution Temp. (°C)	Compound
5	134°	naphthalene
5a	135°	benzothiophene
6	151°	β-methylnaphthalene
7	153°	α-methylnaphthalene
8	163°	biphenyl
8a	167°	dimethylnaphthalene isomer
8b	169°	dimethylnaphthalene isomer
8c	172°	dimethylnaphthalene isomer
9	173°	acenaphthylene
10	177°	acenaphthene
10a	178°	alkyl-biphenyl isomer
11	183°	dibenzofuran
11a	185°	trimethylnaphthalene isomer
11b	189°	isopropylnaphthalene
12	191°	fluorene
13	193°	2,2,4-trimethyl penta 1,3-diol di-isobutyrate (bkg)
13a	197°	$C_{13}H_{10}O$ isomer (tent)
13b	199°	$C_{13}H_{10}O$ isomer (tent)
13c	200°	$C_{16}H_{18}$ isomer
13d	204°	$C_{16}H_{18}$ isomer
13e	207°	methyl-fluorene isomer
13f	212°	$C_{15}H_{16}$ isomer (tent)
13g	213°	dibenzothiophene
13h	217°	phenanthrene
14	218°	D_{10} anthracene (ℓ)
14a	219°	anthracene
14b	229°	unknown
14c	231°	methyl-phenanthrene isomer
14d	233°	methylene-phenanthrene isomer
14e	234°	$C_{15}H_{12}$ isomer
14f	239°	unknowns
15	250°	$C_{16}H_{10}$ isomer
15a	250°	$C_{16}H_{10}$ isomer
15b	250°	2-benzyl benzimidazole
16	250°	$C_{16}H_{10}$ isomer
16a	250°	diphenyl disulfide or unknown
16b	250°	methyl pyrene isomer
16c	250°	methyl pyrene isomer
16d	250°	unknown
17	250°	phthalate compound (bkg)
17a	250°	$C_{18}H_{12}$ isomer
18	250°	$C_{18}H_{12}$ isomer
20	250°	phthalate compound (bkg)
21	250°	phthalate compound (bkg)
21a	250°	$C_{20}H_{12}$ isomer (tent), (5 rings)
21b	250°	$C_{20}H_{12}$ isomer (tent), (5 rings)

TABLE 36. GC/MS ANALYSIS OF TENAX SAMPLE UPSTREAM OF STEADY-STATE XAD-2 TRAP FOR RUN 21
-QUALITATIVE RESULTS-

Chromatographic Peak No.	Elution Temp. (°C)	Compound
1	57°	CO_2
2	58°	carbonyl sulfide + sulfur dioxide
3	60°	hydrocarbon
4	70°	acetone
4a	72°	C_5H_{12} isomer
5	74°	methylene chloride (bkg)
6	79°	carbon disulfide
6a	82°	C_4H_8O isomer
7	85°	perfluorobenzene (I)
8	86°	n-hexane
8a	87°	trichloromethane
9	90°	perfluorotoluene (I)
10	96°	benzene
10a	97°	thiophene + carbon tetrachloride
10b	102°	trichloroethylene
11	103°	acetic acid
12	116°	toluene
12a	118°	methylthiophene isomer
12b	122°	C_8H_{18} isomer
15	134°	xylene isomer
16	136°	xylene + C_2-thiophene isomers
16a	137°	C_2-thiophene isomer
17	140°	styrene
17a	140°	hydrocarbon
18	140°	xylene isomer
18a	143°	C_2-thiophene isomer
19	144°	C_9H_{20} isomer
20	146°	$C_{10}H_{22}$ isomer
20a	151°	saturated hydrocarbon
21	152°	benzaldehyde
21a	154°	C_3-benzene isomer
22	154°	phenol (tent)
22a	155°	C_3-benzene isomer
23	156°	saturated hydrocarbon
23a	156°	C_3-benzene isomer
23b	157°	saturated hydrocarbon
23c	158°	benzofuran
24	159°	C_3-benzene isomer
24a	164°	C_4-benzene isomer
25	164°	C_3-benzene isomer
25a	166°	saturated hydrocarbon
25b	167°	cresol isomer
26	167°	C_3H_5-benzene isomer
27	168°	indene
27a	169°	saturated hydrocarbon + C_4-benzene isomers
27b	169°	acetophenone
28	170°	cresol isomer
28a	173°	C_4-benzene isomer
28b	174°	C_4-benzene isomer
29	176°	methylbenzofuran + C_2-phenol isomers
30	177°	methylbenzofuran isomer
30a	178°	saturated hydrocarbon
31	180°	C_2-phenol + C_4-benzene isomers
31a	181°	C_2-phenol isomer
31b	182°	C_4H_7-benzene isomer
32	184°	C_2-phenol + methylindene isomers
32a	185°	C_4H_7-benzene isomer
33	187°	C_2-phenol isomer
33a	188°	benzoic acid (tent)
34	192°	naphthalene
34a	193°	benzothiophene
35	208°	β-methylnaphthalene
35a	210°	methylbenzothiophene isomer
36	211°	α-methylnaphthalene
38	216°	biphenyl
39	219°	saturated hydrocarbon
39a	221°	C_2-naphthalene isomer
39b	223°	C_2-naphthalene isomer
40	224°	unknown
40a	225°	C_2-naphthalene isomer
41	226°	$C_{12}H_8$ isomer + hydrocarbon
42	230°	$C_{12}H_{10}$ isomer
42a	233°	dibenzofuran
42b	240°	$C_{13}H_{10}$ isomer
42c	240°	tributyl phosphate (tent)
43	240°	diphenyl oxazole isomer

TABLE 37. GC/MS ANALYSIS OF TENAX SAMPLE DOWNSTREAM OF STEADY-STATE XAD-2 TRAP FOR RUN 21
-QUALITATIVE RESULTS-

Chromatographic Peak No.	Elution Temp. (°C)	Compound
1	56°	CO_2
2	57°	sulfur dioxide
3	58°	carbonyl sulfide
3a	66°	butene isomer + freon 11
3b	67°	acetone
4	68°	n-pentane
5	70°	methylene chloride (bkg)
6	71°	carbon disulfide
6a	73°	C_5H_8 isomer
6b	74°	C_5H_{10} isomer
6c	76°	C_4H_8O isomer
7	76°	hexafluorobenzene (I)
7a	78°	n-hexane
7b	78°	chloroform (tent)
8	87°	perfluorotoluene (I)
9	92°	benzene
9a	93°	carbon tetrachloride
10	95°	acetic acid
10a	97°	C_6H_{10} isomer
10b	100°	trichloroethylene
11	113°	toluene
11a	116°	4-methyl-2-ethyl-1,3-dioxolane (tent)
12	125°	silane compound (bkg)
12a	130°	xylene isomer
12b	136°	hydrocarbon
12c	138°	hydrocarbon
12d	146°	hydrocarbon
13	148°	benzaldehyde
13a	151°	phenol
14	152°	C_7H_5N isomer
15	153°	hydrocarbon
15a	156°	hydrocarbon
15b	159°	hydrocarbon
17	164°	cresol isomer
18	166°	indene
18a	167°	acetophenone
19	168°	cresol isomer
19a	173°	C_4-benzene isomer
20	174°	C_2-phenol isomer
20a	176°	methyl benzofuran isomer
20b	178°	C_2-phenol isomer
20c	179°	C_4-benzene isomer
21	180°	C_2-phenol isomer
21a	182°	C_4H_7-benzene isomer
22	183°	C_2-phenol isomer
24	186°	benzoic acid
25	189°	naphthalene
*	190°	benzothiophene
*	197°	C_5H_9-benzene
*	204°	methylbenzothiophene isomer (tent)
27	206°	β-methylnaphthalene
*	207°	methyl benzothiophene isomer
28	208°	α-methylnaphthalene
*	210°	thiobenzoic acid or unknown
31	217°	biphenyl
32	220°	hydrocarbon
33	228°	dimethyl naphthalene isomer
34	229°	C_2-naphthalene isomer
35	232°	acenaphthylene
36	236°	acenaphthene
37	240°	dibenzofuran (tent)
*	240°	$C_{13}H_{10}$ isomer

*Minor unnumbered peak.

TECHNICAL REPORT DATA
(Please read Instructions on the reverse before completing)

1. REPORT NO. EPA-600/7-79-201	2.	3. RECIPIENT'S ACCESSION NO.
4. TITLE AND SUBTITLE Pollutants from Synthetic Fuels Production: Sampling and Analysis Methods for Coal Gasification		5. REPORT DATE August 1979
		6. PERFORMING ORGANIZATION CODE
7. AUTHOR(S) S.K. Gangwal, P.M. Grohse, D.E. Wagoner, D.J. Minick, C.M. Sparacino, and R.A. Zweidinger		8. PERFORMING ORGANIZATION REPORT NO.
9. PERFORMING ORGANIZATION NAME AND ADDRESS Research Triangle Institute P.O. Box 12194 Research Triangle Park, North Carolina 27709		10. PROGRAM ELEMENT NO. EHE623A
		11. CONTRACT/GRANT NO. Grant No. R804979
12. SPONSORING AGENCY NAME AND ADDRESS EPA, Office of Research and Development Industrial Environmental Research Laboratory Research Triangle Park, NC 27711		13. TYPE OF REPORT AND PERIOD COVERED Task Final; 8/78 - 7/79
		14. SPONSORING AGENCY CODE EPA/600/13

15. SUPPLEMENTARY NOTES IERL-RTP project officer is N. Dean Smith, Mail Drop 61, 919/541-2708. Grant-related reports include EPA-600/7-78-171, EPA-600/7-79-200, and EPA-600/7-79-202.

16. ABSTRACT The report describes sampling and analysis methods involving a laboratory-scale coal gasification facility used to study the generation, sampling, chemical analysis, process evaluation, and environmental assessment of pollutants from coal gasification. It describes methods for particulates, organic condensibles, and vapors or gases in the raw product stream of the gasifier as well as for solid residues. It describes gas chromatography (GC) procedures for measuring fixed gases, C1-C5 hydrocarbons, sulfur gases, and C6-C8 aromatics. Atomic adsorption (AA) procedures for measuring toxic trace elements include those for arsenic, selenium, lead, cadmium, chromium, and mercury. Volatile organics are collected from the gas stream using polymeric sorbents (Tenax GC and XAD-2), and analyzed by glass capillary GC/mass spectrometry (MS). The major nonvolatile byproduct (tar) is prefractionated by solvent partitioning into acid, base, and neutral fractions. Each fraction is analyzed by capillary GC/MS or high-performance liquid chromatography (HPLC). Typical results are given to illustrate the nature of the compounds studied, the methodologies, and their sensitivities.

17. KEY WORDS AND DOCUMENT ANALYSIS

a. DESCRIPTORS		b. IDENTIFIERS/OPEN ENDED TERMS	c. COSATI Field/Group	
Pollution	Organic Compounds	Pollution Control	13B	07C
Coal Gasification	Vapors	Stationary Sources	13H	
Sampling	Gases	Synthetic Fuels	14B	
Analyzing	Residues	Particulates		
Dust			11G	
Aerosols			07D	

18. DISTRIBUTION STATEMENT Release to Public	19. SECURITY CLASS (This Report) Unclassified	21. NO. OF PAGES 102
	20. SECURITY CLASS (This page) Unclassified	22. PRICE

EPA Form 2220-1 (9-73)