EPA
United States
Environmental Protection
Agency

Industrial Environmental Research
Laboratory
Research Triangle Park NC 27711

EPA-600/7-80-001
January 1980

TVA
Tennessee Valley
Authority
Office of Power

Emission Control
Development Projects
Muscle Shoals AL 35660

ECDP B-7

Definitive SO_x Control Process Evaluations: Limestone, Lime, and Magnesia FGD Processes

Interagency Energy/Environment R&D Program Report

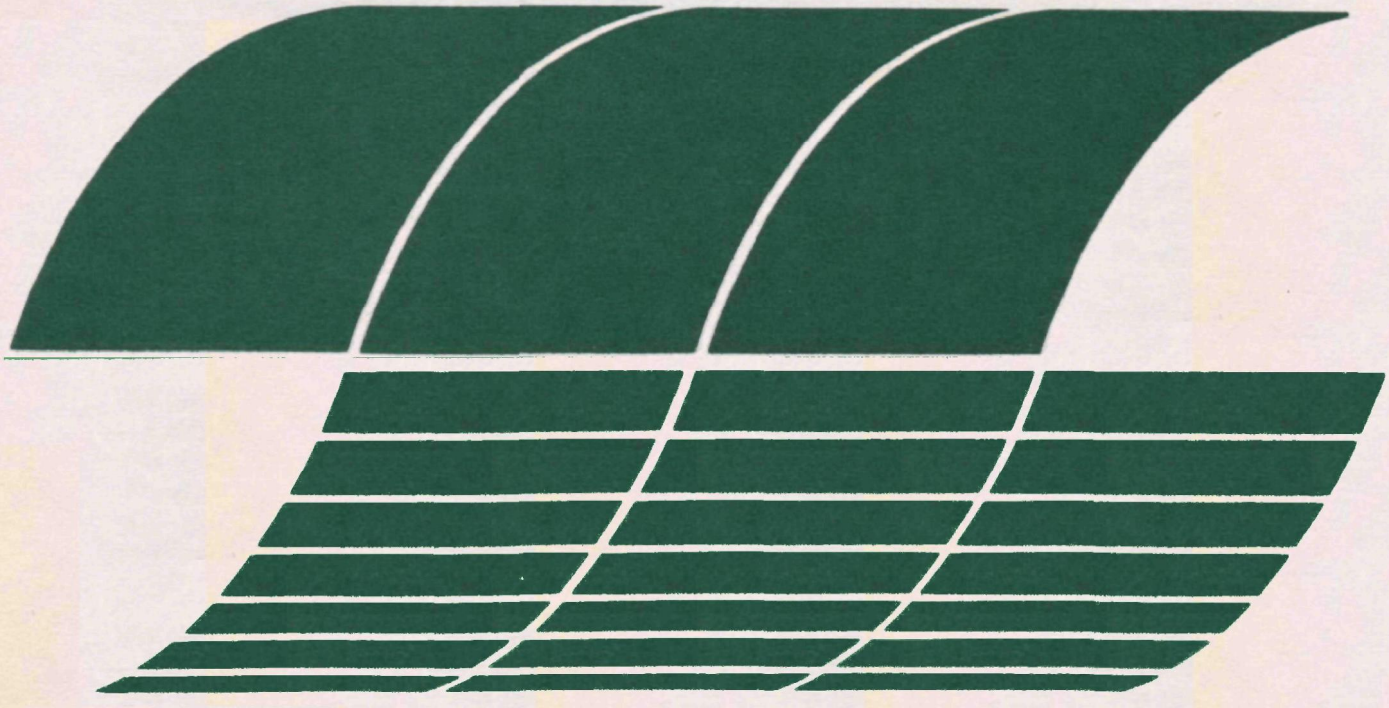

RESEARCH REPORTING SERIES

Research reports of the Office of Research and Development, U.S. Environmental Protection Agency, have been grouped into nine series. These nine broad categories were established to facilitate further development and application of environmental technology. Elimination of traditional grouping was consciously planned to foster technology transfer and a maximum interface in related fields. The nine series are:

1. Environmental Health Effects Research
2. Environmental Protection Technology
3. Ecological Research
4. Environmental Monitoring
5. Socioeconomic Environmental Studies
6. Scientific and Technical Assessment Reports (STAR)
7. Interagency Energy-Environment Research and Development
8. "Special" Reports
9. Miscellaneous Reports

This report has been assigned to the INTERAGENCY ENERGY-ENVIRONMENT RESEARCH AND DEVELOPMENT series. Reports in this series result from the effort funded under the 17-agency Federal Energy/Environment Research and Development Program. These studies relate to EPA's mission to protect the public health and welfare from adverse effects of pollutants associated with energy systems. The goal of the Program is to assure the rapid development of domestic energy supplies in an environmentally-compatible manner by providing the necessary environmental data and control technology. Investigations include analyses of the transport of energy-related pollutants and their health and ecological effects; assessments of, and development of, control technologies for energy systems; and integrated assessments of a wide range of energy-related environmental issues.

EPA REVIEW NOTICE

This report has been reviewed by the participating Federal Agencies, and approved for publication. Approval does not signify that the contents necessarily reflect the views and policies of the Government, nor does mention of trade names or commercial products constitute endorsement or recommendation for use.

This document is available to the public through the National Technical Information Service, Springfield, Virginia 22161.

EPA-600/7-80-001

TVA ECDP B-7

January 1980

Definitive SO_x Control Process Evaluations: Limestone, Lime, and Magnesia FGD Processes

by

K.D. Anderson, J.W. Barrier,
W.E. O'Brien, and S.V. Tomlinson

TVA, Office of Power
Emission Control Development Projects
Muscle Shoals, Alabama 35660

EPA-IAG-D9-E721-BI and TV-41967A
Program Element No. INE624A

EPA Project Officer: C.J. Chatlynne

Industrial Environmental Research Laboratory
Office of Environmental Engineering and Technology
Research Triangle Park, NC 27711

Prepared for

U.S. ENVIRONMENTAL PROTECTION AGENCY
Office of Research and Development
Washington, DC 20460

DISCLAIMER

This report was prepared by the Tennessee Valley Authority and has been reviewed by the Office of Energy, Minerals, and Industry, U.S. Environmental Protection Agency, and approved for publication. Approval does not signify that the contents necessarily reflect the views and policies of the Tennessee Valley Authority or the U.S. Environmental Protection Agency, nor does mention of trade names or commercial products constitute endorsement or recommendation for use.

ABSTRACT

Updated economic evaluations and ground-to-ground energy evaluations of the limestone slurry, lime slurry, and magnesia (producing sulfuric acid) flue gas desulfurization (FGD) processes were made. The lime slurry process was evaluated using purchased lime and lime calcined onsite. The lime slurry process remains lower in capital investment (90 $/kW for the base-case 500-MW power plant burning 3.5% sulfur coal) than the limestone slurry process (98 $/kW). The limestone slurry process remains lower in annual revenue requirements (4.02 mills/kWh) than the lime slurry process (4.25 mills/kWh). The magnesia process is about one-third higher in capital investment (132 $/kW) and one-fourth higher in annual revenue requirements (5.05 mills/kWh including credit for acid sales) compared to the limestone slurry process, because of the complexity of the absorbent-recovery and acid-producing areas. The lime slurry process using purchased lime is more economical than the limestone slurry process at low absorbent consumption rates (below about 200 MW or about 2% sulfur coal). Onsite lime calcination becomes economical compared to purchased lime for larger power plants and higher coal sulfur levels (about 1,000 MW with 3.5% sulfur coal, 750 MW with 5% sulfur coal). The limestone slurry process has the lowest overall (raw material, FGD, and disposal) energy requirements, 15,000 Btu/lb sulfur removed, compared to 20,000 for the lime slurry process, and 21,000 for the magnesia process. The overall energy requirements for the magnesia process are only 45% higher than the limestone process (compared to 90% for FGD energy alone) because of the low raw material consumption and a credit for replacement of commercial acid with FGD acid.

CONTENTS

Abstract iii
Figures vii
Tables x
Abbreviations and Conversion Factors xiii

Executive Summary xv

Introduction 1

Process Background 3
  Limestone-Lime Slurry Processes 3
  Magnesia Scrubbing - Regeneration 7

Design, Economic, and Energy Premises 9
  Design Premises 9
    Emission Standards 9
    Fuels 10
    Power Plant Design 10
    Power Plant Operation 12
    Flue Gas Composition 13
    Scrubber Design 14
    Reheat 17
    Raw Materials 17
    Waste Disposal 17
    Case Variations 17
  Economic Premises 18
    Capital Costs 19
    Contingency 21
    Other Capital Charges 21
    Land 21
    Working Capital 21
    Annual Revenue Requirements 22
  Energy Premises 25
    Transportation Energy 25
    Limestone 26
    Lime Calcination 26
    Magnesia From Magnesite 26
    Magnesia From Seawater 27
    Byproduct Sulfuric Acid Energy Credit 27

Systems Estimated 28
  Limestone Slurry Process 28
    Major Process Areas 33
    Storage Capacity 33
    Solids Disposal 34
    Pond Construction 34

Limestone Production 34
Lime Slurry Process 34
Major Process Areas 49
Storage Capacities 49
Solids Disposal. 56
Lime Production 56
Storage Capacities 60
Magnesia Process 60
Major Process Areas 80
Storage Capacity 89
Magnesia Production 89
Magnesia From Magnesite 90
Major Process Areas 90
Magnesia From Seawater 94
Major Process Areas 94

Economic and Energy Evaluation and Comparison 99
Capital Investment 99
Base Case 104
Case Variations 109
Annual Revenue Requirements 113
Case Variations 123
Variations in Economic Factors 127
Lifetime Revenue Requirements 132
Alternate Particulate Removal and Waste Disposal Comparison . . 149
Energy Evaluation and Comparison 150
Mining, Separation, and Sizing 152
Absorbent Processing 152
Transportation 152
Cumulative Energy Requirements for Delivered Absorbents 155
FGD Process Battery Limits 157
Byproduct Disposal 157
Byproduct Sulfuric Acid Energy Credit 160
Total Ground-to-Ground Energy Requirements 160

Conclusions 163
Capital Investment 163
Annual Revenue Requirements 164
Energy Requirements 165
Process Development 166

References 167

Appendix
A. Total Capital Investment, Average Annual Revenue Requirement, and Lifetime Revenue Requirement Tables - All Processes and Case Variations 171

FIGURES

Number		Page
S-1	Total energy requirement per pound of sulfur removed. Base case	xxvi
1	Limestone slurry process. Base-case flow diagram	29
2	Limestone slurry process. Base-case overall plot plan	30
3	Limestone slurry process. Mobile-bed scrubber system base-case plan and elevation	31
4	Limestone slurry process. Base-case control diagram	32
5	Pond construction diagram	42
6	Limestone mining and processing flow diagram	44
7	Lime slurry process. Base-case flow diagram	45
8	Lime slurry process. Base-case overall plot plan	46
9	Lime slurry process. Mobile-bed scrubber system base-case plan and elevation	47
10	Lime slurry process. Base-case control diagram	48
11	Lime from limestone. Base-case flow diagram	58
12	Lime from limestone. Base-case control diagram	59
13	Lime from limestone. Base-case plan and elevation	61
14	Magnesia process. Base-case flow diagram	68
15	Magnesia process. Base-case control diagram	69
16	Magnesia process. Base-case overall plot plan	70
17	Spray grid tower absorber system. Base-case plan and elevation	71
18	Magnesia process. Base-case plot plan - regeneration and acid production area	73
19	Magnesia process. Regeneration area elevation	74
20	Magnesia process. Base-case acid plant plan	75
21	Magnesia process. Base-case acid plant elevation	76
22	Magnesia from magnesite. Flow diagram	91
23	Magnesia from seawater. Flow diagram	95
24	All processes. Effect of power unit size on capital investment: new coal-fired units	110
25	All processes. Effect of power unit size on unit investment cost, $/kW: new coal-fired units	111
26	All processes. Effect of sulfur content of coal on unit investment cost, $/kW: new 500-MW coal-fired units	112
27	All processes. Effect of power unit size on annual revenue requirements: new coal-fired units	124
28	All processes. Effect of sulfur content of coal on annual revenue requirements: new 500-MW coal-fired units	125
29	All processes. Effect of power unit size on average unit operating cost, $/ton of coal burned: new 500-MW coal-fired units	126
30	Limestone slurry process. Effect of power unit size and variations in operating labor cost on annual revenue requirements: new coal-fired units	129

FIGURES (continued)

Number		Page
31	Lime slurry process. Effect of power unit size and variations in operating labor cost on annual revenue requirements: new coal-fired units	130
32	Magnesia and limestone processes. Effect of sulfur in coal and variations in operating labor cost on annual revenue requirements: new 500-MW units	131
33	Lime slurry process with onsite calcination. Effect of power unit size and variations in maintenance cost on annual revenue requirements: new coal-fired units	133
34	Magnesia process. Effect of sulfur in coal and variations in maintenance cost on annual revenue requirements: new 500-MW units	134
35	Magnesia process. Effect of power unit size and variations in capital charges on annual revenue requirements: new coal-fired units	135
36	Magnesia process. Effect of sulfur in coal and variations in capital charges on annual revenue requirements: new 500-MW units	136
37	Magnesia process. Effect of power unit size and variations in sulfuric acid price on total annual income from byproduct sales: new coal-fired units	137
38	Magnesia process compared with limestone. Effect of power unit size and variations in sulfuric acid sale price on annual revenue requirements: new coal-fired units	138
39	Magnesia process. Effect of sulfur in coal and variations in sulfuric acid price on total annual income from byproduct sales: new 500-MW units	139
40	Magnesia process compared with limestone. Effect of sulfur in coal and variations in sulfuric acid price on annual revenue requirements: new 500-MW units	140
41	Limestone slurry process. Effect of power unit size and variations in limestone price on annual revenue requirements: new coal-fired units	141
42	Lime slurry process with onsite calcination and limestone slurry process. Effect of sulfur in coal and variations in limestone price on annual revenue requirements: new 500-MW units	142
43	Lime slurry process with onsite calcination. Effect of power unit size and variations in limestone price on annual revenue requirements: new coal-fired units	143
44	Lime slurry process. Effect of power unit size and variations in lime price on annual revenue requirements: new coal-fired units	144
45	All processes. Effect of power unit size on levelized unit revenue requirements: new coal-fired units	147
46	All processes. Effect of sulfur in coal on levelized unit revenue requirements: new 500-MW units	148

FIGURES (continued)

Number		Page
47	Total energy requirement per pound of sulfur removed. Base case	151
48	Mining, separation, and sizing energy requirements per ton of absorbent	153
49	Mining, separation, and sizing energy requirements per pound sulfur removed. Base case	153
50	Absorbent processing energy requirements per ton of absorbent production	154
51	Transportation energy requirements per ton of absorbent	154
52	Total energy requirements per ton of absorbent	156
53	Absorbent processing energy requirements per pound sulfur removed. Base case	158
54	Transportation energy requirements per pound sulfur removed. Base case	158
55	FGD energy requirements per pound of sulfur removed. Base case	159

TABLES

Number		Page
S-1	Summary of Total Capital Investment Requirements	xx
S-2	Summary of Average Annual Revenue Requirements (Including Byproduct Credit)	xxi
S-3	Absorbent Preparation Energy Requirements	xxiv
S-4	Energy Required for Production of Sulfuric Acid From Sulfur	xxiv
S-5	Ground-To-Ground Energy Requirements Assessment - Btu/lb Sulfur Removed	xxv
1	Status of FGD Systems in the U.S. in September 1979	5
2	Lime and Limestone Systems in Operation in the U.S. - September 1979	6
3	Required Removal Efficiencies	10
4	Coal Compositions and Flow Rates at Varying Sulfur Levels	11
5	Oil Composition and Flow Rate	11
6	Assumed Power Plant Capacity Schedule	12
7	Power Unit Input Heat Requirements	12
8	Calculated Base-Case Flue Gas Composition and Flow Rate	13
9	Flue Gas Compositions for Power Units Without Emission Control Facilities	14
10	Power Plant Flue Gas and SO_2 Rates	15
11	Scrubber Operating Conditions	16
12	Relative Quantities of Gas and Sulfur To Be Processed in Comparison With the Base-Case Quantities	19
13	Cost Indexes and Projections	20
14	Projected 1980 Unit Costs for Raw Materials, Labor, and Utilities	22
15	Estimated Overall Annual Maintenance Costs	23
16	Annual Capital Charges for Power Industry Financing	24
17	Limestone Slurry Process - Material Balance	35
18	Limestone Slurry Process - Base-Case Equipment List Description and Cost	37
19	Limestone Slurry Process - Acreage Required for Waste Solids Disposal	43
20	Lime Slurry Process - Material Balance	50
21	Lime Slurry Process - Base-Case Equipment List Description and Cost	52
22	Lime Slurry Process - Acreage Required for Waste Solids Disposal	57
23	Lime From Limestone - Material Balance	62
24	Lime From Limestone - Base-Case Equipment List Description and Cost	63

TABLES (continued)

Number		Page
25	Magnesia Slurry - Regeneration Process - Material Balance	77
26	Magnesia Slurry - Regeneration Process - Base-Case Equipment List Description and Cost	81
27	Magnesia From Magnesite - Major Equipment List and Horsepower	92
28	Magnesia From Magnesite - Material Balance	93
29	Magnesia From Seawater - Material Balance	96
30	Magnesia Production From Seawater - Major Equipment List and Horsepower	98
31	Limestone Slurry Process - Total Capital Investment Summary	100
32	Lime Slurry Process - Total Capital Investment Summary	101
33	Lime Slurry Process With Onsite Calcination - Total Capital Investment Summary	102
34	Magnesia Process - Total Capital Investment Summary	103
35	Limestone Slurry Process Base Case - Area Process Equipment and Installation Costs (k$)	105
36	Lime Slurry Process Base Case - Area Process Equipment and Installation Costs (k$)	106
37	Lime Slurry Process With Onsite Calcination Base Case - Area Process Equipment and Installation Costs (k$)	107
38	Magnesia Process Base Case - Area Equipment and Installation Costs (k$)	108
39	Limestone Slurry Process - Total Annual Revenue Requirements Summary	114
40	Lime Slurry Process - Total Annual Revenue Requirements Summary	115
41	Lime Slurry Process With Onsite Calcination - Total Annual Revenue Requirements Summary	116
42	Magnesia Process - Total Net Annual Revenue Requirements Summary	117
43	Limestone Slurry Process Base Case - Annual Revenue Requirements Direct Costs	118
44	Lime Slurry Process Base Case - Annual Revenue Requirements Direct Costs	119
45	Lime Slurry Process With Onsite Calcination - Annual Revenue Requirements Direct Costs	120
46	Magnesia Process Base Case - Annual Revenue Requirements Direct Costs	121
47	Sensitivity Variations Studied in the Economic Cost Projections	128
48	Comparison of Cumulative Lifetime Discounted Process Costs for Different SO_2 Removal Levels	145
49	Magnesia Process - Lifetime Sulfuric Acid Production and Credit	146

TABLES (continued)

Number		Page
50	Case Variations for Magnesia Process Wet Particulate Scrubbing and Limestone Process Waste Fixation and Landfill Disposal	149
51	Absorbent Energy Requirements	155
52	FGD Energy Allotment	157
53	Energy Required for Production of Sulfuric Acid From Sulfur	161
54	Ground-To-Ground Energy Requirements Assessment - Btu/lb Sulfur Removed	161

ABBREVIATIONS AND CONVERSION FACTORS

ABBREVIATIONS

ac	acre	kWh	kilowatt-hour
aft^3/min	actual cubic feet per minute	lb	pound
bbl	barrel	L/G	liquid-to-gas ratio in gallons per thousand actual cubic feet of gas at outlet conditions
Btu	British thermal unit		
^oF	degrees Fahrenheit		
dia	diameter	M	million
FGD	flue gas desulfurization	mi	mile
ft	feet	mo	month
ft^2	square feet	MW	megawatt
ft^3	cubic feet	ppm	parts per million
gal	gallon	psig	pounds per square inch (gauge)
gpm	gallons per minute	rpm	revolutions per minute
gr	grain	sec	second
hp	horsepower	sft^3/min	standard cubic feet per minute (60^oF)
hr	hour		
in.	inch	SS	stainless steel
k	thousand	yr	year
kW	kilowatt		

CONVERSION FACTORS

EPA policy is to express all measurements in Agency documents in metric units. Values in this report are given in British units for the convenience of engineers and other scientists accustomed to using the British systems. The following conversion factors may be used to provide metric equivalents.

British			Metric	
ac	acre	0.405	hectare	ha
bbl	barrels of oil[a]	158.97	liters	ℓ
Btu	British thermal unit	0.252	kilocalories	kcal
^{o}F	degrees Fahrenheit minus 32	0.5556	degrees Celsius	^{o}C
ft	feet	30.48	centimeters	cm
ft^2	square feet	0.0929	square meters	m^2
ft^3	cubic feet	0.02832	cubic meters	m^3
ft/min	feet per minute	0.508	centimeters per second	cm/sec
ft^3/min	cubic feet per minute	0.000472	cubic meters per second	m^3/sec
gal	gallons (U.S.)	3.785	liters	ℓ
gpm	gallons per minute	0.06308	liters per second	ℓ/sec
gr	grains	0.0648	grams	g
gr/ft^3	grains per cubic foot	2.288	grams per cubic meter	g/m^3
hp	horsepower	0.746	kilowatts	kW
in.	inches	2.54	centimeters	cm
lb	pounds	0.4536	kilograms	kg
lb/ft^3	pounds per cubic foot	16.02	kilograms per cubic meter	kg/m^3
lb/hr	pounds per hour	0.126	grams per second	g/sec
psi	pounds per square inch	6895	Pascals (Newton per square meter)	pa (N/m^2)
mi	miles	1609	meters	m
rpm	revolutions per minute	0.1047	radians per second	rad/sec
sft^3/min	standard cubic feet per minute ($60^{o}F$)	1.6077	normal cubic meters per hour ($0^{o}C$)	Nm^3/hr
ton	tons (short)[b]	0.9072	metric tons	tonne
ton, long	tons (long)[b]	1.016	metric tons	tonne
ton/hr	tons per hour	0.252	kilograms per second	kg/sec

a. Forty-two U.S. gallons per barrel of oil.
b. All tons, including tons of sulfur, are expressed in short tons in this report.

EXECUTIVE SUMMARY

As a part of the flue gas desulfurization (FGD) studies sponsored by the U.S. Environmental Protection Agency, the Tennessee Valley Authority has conducted a series of economic evaluations based on conceptual designs of FGD processes. These studies are based on premises which permit equitable economic comparisons between processes. The studies of some processes are refined and updated as the technologies of the processes develop. This study updates the limestone, lime, and magnesia scrubbing processes previously evaluated in 1973 and 1975. It is the second part of a three-part study of current FGD technology. The first part has been published and the third part is being prepared. Since the earlier studies many full-scale applications of the limestone and lime processes have been placed in operation. The magnesia process has been further refined and has been evaluated to some extent in full-scale application. The processes represent the state of technology in mid-1979. For the lime process the economics of onsite calcination are also compared with the economics of a process using purchased lime.

A ground-to-ground energy requirement assessment is also included. The assessment consists of a determination of raw material mining, processing, and transportation energy requirements in addition to FGD energy requirements. For the magnesia process an energy credit for the byproduct sulfuric acid produced is also included. Also, the difference in energy requirements between the magnesia process and the lime and limestone slurry processes (the energy penalty for making acid) is compared with the energy required to make acid in a conventional acid plant.

PROCESS BACKGROUND

The limestone and lime slurry processes are similar in design and function. The flue gas is scrubbed with a recirculating slurry of finely ground limestone or lime to produce a mixture of calcium sulfite and calcium sulfate salts. In the simplest form of the process a purge stream of slurry is pumped to a disposal pond where it settles to a semisolid sludge. The lime slurry process has a more reactive and efficient scrubbing slurry at the expense of a more costly absorbent. Most U.S. FGD processes are variations of limestone or lime processes because of their simplicity and relatively advanced technical development. A major disadvantage is the large volume of intractable waste produced.

The magnesia process scrubbing system is similar to the limestone and lime systems. Magnesium oxide (MgO) is used as the absorbent. The highly reactive MgO provides an efficient scrubbing medium and is expected to reduce scaling and plugging problems. The high cost of the MgO necessitates its recovery, however. The scrubber purge of magnesium sulfite and sulfate is centrifuged, dried, and calcined to produce MgO, which is reused, and sulfur dioxide (SO_2), which is processed to sulfuric acid. The magnesia process thus produces a salable product and eliminates major waste disposal problems, but requires a costly and complicated regeneration and acid manufacturing system. Control of impurities in the closed-cycle MgO regeneration loop also requires additional pre-scrubbing equipment. The magnesia process has been evaluated in three full-scale U.S. applications and other systems are planned.

PREMISES

The premises used in this study were developed by TVA and EPA to provide an equitable basis for economic comparisons of FGD processes. Conditions for the base case are representative of typical power-industry conditions. Case variations are used to determine the sensitivity of costs to variations in conditions. All FGD costs, including waste disposal or acid manufacture, are included. A sales credit for byproduct acid is also included.

Design Premises

For the base-case conditions a new, 500-MW Midwestern power plant with an operating lifetime of 30 years and a declining operating schedule totaling 127,500 hours is used. The heat rate is 9,000 Btu/kWh. The base-case fuel is a typical Eastern U.S. coal with 3.5% sulfur and 16% ash and a heating value of 10,500 Btu/lb, as fired. It is assumed that 80% of the ash and 95% of the sulfur is emitted with the flue gas. Fly ash and SO_2 control systems are assumed to remove fly ash and SO_2 to meet the new-source performance standards (NSPS) that were in effect when this study was begun (0.1 and 1.2 lb/MBtu, respectively). The FGD system is assumed to begin downstream from the boiler electrostatic precipitators and induced-draft fans, which are not included in the FGD costs. The flue gas is fed to parallel scrubber trains from a common plenum. Two trains are used for the 200-MW power plant and four trains for the 500- and 1000-MW power plants. Each train is equipped with a forced-draft (relative to the FGD units) fan and provisions for reheat to 175°F. Indirect steam reheat is used for coal-fuel cases and direct oil-fired reheat is used for the oil-fuel case. No bypass or redundancy provisions are provided.

Scrubber design is based on TVA experience, power-industry operating experience, and process vendor information. The designs are generic, representing most-proven technology rather than a particular installation, and they are sized and costed as fully developed and proven units.

Case variations consist of 200- and 1000-MW power plant sizes, existing power plants, coal with 2% and 5% sulfur, and oil with 2.5% sulfur.

Economic Premises

The economic premises are divided into capital investment costs and first-year annual revenue requirements. Cost information is based on engineering firm and vendor information, TVA data, and published sources. Cost projections are based on Chemical Engineering cost indices. The premises are based on regulated-utility economics with a 60% debt - 40% equity capital structure.

Capital investment costs are divided into direct costs, indirect costs, land, and working capital. The costs are projected to mid-1979, representing a mid-1977 to mid-1980 construction period with 50% expenditure by mid-1979. Direct capital costs cover process equipment, piping and insulation, transport lines, foundations and structural, excavation and site preparation, roads and railroads, electrical equipment, instrumentation, buildings, and trucks and earthmoving equipment. These estimates are based on costs obtained from vendors and on related literature information.

Indirect capital costs consist of engineering design and supervision, architect and engineering contractor expenses, construction expenses, contractor fees, contingency, allowance for startup and modifications, and interest during construction. Working capital and land costs are included as separate entries. These estimates are based on current industry practice and authoritative literature sources.

Annual revenue requirements are based on a first-year operating schedule of 7,000 hours. The costs are projected to mid-1980. In addition, lifetime revenue requirements are included for the three power plant sizes with both declining and constant operating schedules. Revenue requirements are divided among direct costs for raw materials, labor, utilities, equipment fuel and maintenance, and analyses and indirect costs for capital charges and overheads.

Energy Premises

The reference datum for the ground-to-ground energy assessment is a hypothetical total-available-energy reservoir. All energy withdrawn from this reservoir to meet FGD requirements, including raw material production, is included in the assessment. In addition, an energy credit for byproduct sulfuric acid is assigned to the magnesia process. The byproduct acid replaces acid that would have otherwise been produced by conventional methods, for which energy would have been withdrawn from the hypothetical reservoir. The energy consumptions are based on data obtained on typical commercial operations for quarrying, mining, and processing of the raw materials used. All energy requirements for

explosives, diesel fuel, and drying and calcining fuel are converted to Btu per pound of raw material and Btu per pound of sulfur removed. The energy credit is based on sulfuric acid produced from Frasch sulfur.

PROCESS DESCRIPTIONS

The limestone slurry process uses a mobile-bed absorber with a presaturator using absorber slurry and a chevron mist eliminator on the absorber outlet. The flue gas is cooled to about 130°F in the presaturator. The absorbent consists of a 15% solids slurry of 70% minus 200 mesh limestone prepared onsite by crushing and ball-milling limestone. The stoichiometry is 1.3 mols of calcium carbonate ($CaCO_3$) per mol of sulfur removed and the liquid to gas (L/G) ratio is 50 gallons per 1,000 cubic feet. The absorber waste, consisting of a bleedstream from the absorber recirculation loop, is pumped to an earthen-diked, clay-lined pond one mile from the FGD facilities. The waste settles to a 40% solids sludge and the supernatant is returned to the FGD system.

The limestone used is assumed to be obtained locally in a quarrying operation involving stripping, blasting, and quarry-site sizing and grading. The material delivered to the power plant is 95% $CaCO_3$, 0 x 1-1/2 inch crushed limestone.

The lime process uses identical scrubbing and waste disposal systems. The equipment and pond are sized for the more reactive chemistry of lime and a stoichiometry of 1.05 mols of calcium oxide (CaO) per mol of sulfur removed. The L/G ratio is 45 gallons per 1,000 cubic feet. The absorbent is a 15% solids slurry of slaked lime prepared onsite from pebble lime.

For the onsite calcination process a coal-fired (oil-fired for the oil-fuel case variation) calciner sized for the FGD requirements is located adjacent to the FGD unit. The calciner supplies pebble lime to the FGD system, which is otherwise identical to the process using purchased lime.

The magnesia process uses a spray grid column for the absorber and a venturi scrubber for chloride control in place of the presaturator. Chevron mist eliminators are used on both the scrubber and absorber. The chloride scrubber uses absorber liquid and freshwater. The chloride scrubber waste stream is neutralized with limestone and pumped to the ash pond. The spray grid column uses a 15% solids slurry of MgO as the absorbent at a stoichiometry of 1.05 mols of MgO per mol of sulfur removed and an L/G ratio of 10 gallons per 1,000 cubic feet.

The spent slurry from the absorber, containing magnesium sulfite ($MgSO_3$) as the major component, is centrifuged to 85% solids, dried in an oil-fired dryer, and calcined in a fluid-bed reactor. The MgO is returned to storage and the SO_2 is processed to sulfuric acid.

The magnesia used in the process can be produced by calcination of magnesite ($MgCO_3$), which is mined at a single U.S. location, or by treatment of dolomite [$MgCa(CO_3)_2$] with seawater followed by calcination. For the ground-to-ground energy evaluation, both processes are included.

RESULTS

Summaries of capital investment and annual revenue requirements for all cases estimated are given in Tables S-1 and S-2, respectively.

Capital Investment

In order of increasing investment, the base-case ranking by increasing cost is (1) lime, (2) limestone, (3) lime with onsite calcination, and (4) magnesia. The magnesia process capital investment requirements are 45% greater than those for lime. The lime process has a lower capital investment than the limestone process because it requires less feed preparation, has smaller slurry handling equipment, and a smaller waste disposal pond. The capital investment advantages for the lime slurry process are more than offset by the additional materials handling and calcining equipment required with onsite calcination.

The higher capital requirements for the magnesia process are a direct result of the relative complexity of the system. Regeneration of the spent magnesia, including processing, drying, and calcination requires a capital investment of almost $9 million. The recovery system also requires chloride removal prior to the SO_2 absorber, necessitating another $5 million for chloride scrubbing. Sulfuric acid production, storage, and shipping increases costs another $7 million. These capital requirements of approximately $21 million exceed by over $14 million the savings resulting from the elimination of sludge ponding. (Limestone slurry pond construction and waste disposal direct costs are under $7 million and those for lime slurry are slightly over $6 million.)

The capital investments for the waste-producing processes increase with power plant size less rapidly than the capital investment of the magnesia process. The more equipment-intensive magnesia process has less economy of scale.

There is a slightly greater rate of increase in capital investment for the magnesia process with higher sulfur coal than for the waste-producing processes. This is also due to the extensive equipment requirements for the magnesia process.

As also has been shown in previous studies, the effect of 90% SO_2 removal on capital investment, compared with the base-case 79% removal, is slight (3% to 4%) for all processes studied.

TABLE S-1. SUMMARY OF TOTAL CAPITAL INVESTMENT REQUIREMENTS

Case	Years remaining life	Limestone process Total capital investment, $	$/kW	Lime process Total capital investment, $	$/kW	Lime process with onsite calcination Total capital investment, $	$/kW	Magnesia process Total capital investment, $	$/kW
Coal-Fired Power Unit									
1.2 lb SO_2/MBtu heat input allowable emission; onsite solids disposal (ponding)									
200 MW E 3.5% sulfur	20	25,121,000	126	22,758,000	114	28,292,000	142	35,119,000	176
200 MW N 3.5% sulfur	30	25,529,000	128	22,798,000	114	28,371,000	142	34,439,000	172
500 MW E 3.5% sulfur	25	50,406,000	101	46,446,000	93	55,039,000	110	66,837,000	134
500 MW N 2.0% sulfur	30	39,848,000	80	36,947,000	74	43,407,000	87	53,703,000	108
500 MW N 3.5% sulfur	30	48,943,000	98	45,319,000	90	53,860,000	108	65,911,000	132
500 MW N 5.0% sulfur	30	54,797,000	110	50,293,000	101	61,187,000	122	75,805,000	152
1,000 MW E 3.5% sulfur	25	75,075,000	75	71,098,000	71	82,812,000	83	103,641,000	104
1,000 MW N 3.5% sulfur	30	71,730,000	71	67,654,000	68	79,667,000	80	101,353,000	101
90% SO_2 removal; onsite solids disposal (ponding)									
500 MW N 3.5% sulfur	30	50,649,000	101	46,909,000	94	55,910,000	112	68,620,000	137
Oil-Fired Power Unit									
0.8 lb SO_2/MBtu heat input allowable emission; onsite solids disposal (ponding)									
500 MW E 2.5% sulfur	25	38,636,000	77	35,811,000	72	42,391,000	85	42,635,000	85

Basis
Midwest plant location represents project beginning mid-1977, ending mid-1980. Average cost basis for scaling, mid-1979.
Stack gas reheat to 175°F.
Minimum in-process storage; only pumps are spared.
Disposal pond located 1 mile from power plant.
Investment requirements for fly ash removal and disposal excluded; FGD process investment estimate begins with common feed plenum downstream of the ESP.
Construction labor shortages with accompanying overtime pay incentive not considered.

TABLE S-2. SUMMARY OF AVERAGE ANNUAL REVENUE REQUIREMENTS

(INCLUDING BYPRODUCT CREDIT)

Case	Years remaining life	Limestone process		Lime process		Lime process with onsite calcination		Magnesia process	
		Average annual revenue requirements, $	Mills/kWh	Average annual revenue requirements, $	Mills/kWh	Average annual revenue requirements, $	Mills/kWh	Average annual revenue requirements, $	Mills/kWh
Coal-Fired Power Unit									
1.2 lb SO_2/MBtu heat input allowable emission; onsite solids disposal (ponding)									
200 MW E 3.5% sulfur	20	7,469,000	5.34	7,591,000	5.42	8,429,400	6.02	9,808,300	7.01
200 MW N 3.5% sulfur	30	7,147,200	5.11	7,213,200	5.15	8,022,800	5.73	9,273,500	6.62
500 MW E 3.5% sulfur	25	14,771,500	4.22	15,518,400	4.43	16,194,900	4.63	18,312,800	5.23
500 MW N 2.0% sulfur	30	11,637,200	3.32	11,710,600	3.35	12,601,100	3.60	14,663,200	4.19
500 MW N 3.5% sulfur	30	14,082,600	4.02	14,887,700	4.25	15,558,500	4.45	17,787,900	5.08
500 MW N 5.0% sulfur	30	15,898,600	4.54	17,372,400	4.96	17,836,300	5.10	20,407,500	5.83
1,000 MW E 3.5% sulfur	25	23,122,300	3.30	25,387,500	3.63	25,456,200	3.64	28,812,300	4.12
1,000 MW N 3.5% sulfur	30	21,761,300	3.11	23,916,100	3.42	24,125,800	3.45	27,738,500	3.96
90% SO_2 removal; onsite solids disposal (ponding)									
500 MW N 3.5% sulfur	30	14,557,400	4.15	15,593,800	4.46	16,161,800	4.62	18,473,700	5.28
Oil-Fired Power Unit									
0.8 lb SO_2/MBtu heat input allowable emission; onsite solids disposal (ponding)									
500 MW E 2.5% sulfur	25	11,557,700	3.30	11,576,000	3.31	12,793,100	3.66	12,177,600	3.48

Basis
- Midwest plant location, 1980 revenue requirements.
- Power unit on-stream time, 7,000 hr/yr.
- Stack gas reheat to 175°F.
- Investment and revenue requirement for removal and disposal of fly ash excluded.
- Byproduct credit, $25/ton H_2SO_4.

Annual Revenue Requirements

For base-case conditions the ranking of annual revenue requirements in order of increasing cost is: (1) limestone, (2) lime, (3) lime with onsite calcination, and (4) magnesia. The magnesia process revenue requirements include a credit of $25 per ton for the sale of byproduct sulfuric acid. The limestone revenue requirements are lower than those of the lime process despite its higher capital investment, primarily because of the lower raw material cost (0.32 mill/kWh for limestone and 0.82 mill/kWh for lime).

Fuel oil cost for calcination is the largest element of utility costs (0.72 mill/kWh of the total 1.52 mills/kWh) of the magnesia process.

The magnesia process annual revenue requirements are somewhat less sensitive to economy of scale in the power plant size range of 200 to 1000 MW. This is due to the equipment-intensive nature of the magnesia process and its higher variable costs, such as utilities.

The annual revenue requirements advantage of the limestone process over the lime process increases with both power plant size and fuel sulfur content. This is caused principally by the lower raw material cost of the limestone process.

The difference in revenue requirements for lime and lime with onsite calcination processes is reduced with increased plant size or coal sulfur content. Extrapolation of the data for 3.5% sulfur coal shows a break-even for onsite calcination at 1150 MW. For a 5.0% sulfur coal the break-even power plant size for economically feasible onsite calcination is 750 MW.

The requirement for 90% SO_2 removal, compared with the base-case 79% removal, has little effect on annual revenue requirements for each of the four processes. Limestone scrubbing annual revenue requirements are increased by 3% from the base case while lime scrubbing, with its higher raw material cost requirements, is increased by 5%.

Other Process Comparisons

Other, possibly more site-specific, variations of the limestone slurry and magnesia process may also be compared. For example, if ponding is not practical a fixation and landfill disposal process might be used for waste disposal. For the magnesia process the chloride scrubber could be modified to perform particulate removal to meet the 0.1 lb/MBtu NSPS, eliminating the ESP units. For these process variations the capital investment of both processes is reduced, as shown below. The annual revenue requirements, however, are increased for the limestone slurry process and decreased for the magnesia process.

	Capital investment, $/kW	Annual net revenue requirements, mills/kWh
Limestone base case	98	4.02
Limestone, fixation-landfill	80	4.62
Magnesia base case[a]	132	5.08
Magnesia, particulate scrubbing[a]	116	4.97

a. Including byproduct sulfuric acid credit at $25/ton.

Energy Evaluation and Comparison

The respective process absorbents, limestone, lime, and magnesia (either from magnesite or seawater) have different energy requirements. The elements of these energy requirements are: (1) mining, separation, and sizing, (2) processing, including calcining, and (3) transportation.

The upper portion of Table S-3 shows the energy requirements per ton of each absorbent delivered to the FGD system. Limestone with low mining and transportation energy requirements and no processing requirement is by far the lowest at 0.268 MBtu per ton, followed by lime at 6.777 MBtu per ton, magnesia from magnesite at 10.376 MBtu per ton, and magnesia from seawater at 25.696 MBtu per ton. Processing energy requirements dominate the total energy requirements of the absorbents on a delivered ton basis. Since the overall energy requirements for the lime onsite calcination and purchased lime cases are almost identical the latter case is not included in Table S-3.

The consumption rate of the absorbents varies considerably from magnesia at 0.04 pound per pound of sulfur removed to lime at 1.98 pounds per pound of sulfur removed and limestone at 4.58 pounds per pound of sulfur removed. As seen in the lower part of Table S-3, expression of the energy requirements on the basis of process requirements results in a very high energy requirement for lime (6,697 Btu per pound of sulfur removed) as compared with the other absorbents (limestone at 614, magnesia from seawater at 542, and magnesia from magnesite at 219 Btu per pound of sulfur removed).

The magnesia process produces sulfuric acid as a byproduct. Much of the commercial sulfuric acid is produced from elemental sulfur mined by the Frasch method, an energy-intensive operation. Replacement of acid produced from sulfur with FGD byproduct acid will conserve the energy used in mining, transportation, and conversion of sulfur to sulfuric acid. Partially offsetting these energy savings, the heat produced in the combustion of sulfur is not obtained for use and must be deducted from the byproduct energy credit. Table S-4 shows a net energy requirement of 5,491 Btu per pound of sulfur.

TABLE S-3. ABSORBENT PREPARATION ENERGY REQUIREMENTS

	Limestone	Lime onsite calcination	Magnesia from magnesite	Magnesia from seawater
	MBtu/ton of absorbent			
Mining, separation, and sizing	0.191	0.360	1.20	0.882
Absorbent processing	-	6.272	7.613	24.008
Transport	0.077	0.145	1.563	0.806
Total energy requirement, delivered to power plant	0.268	6.777	10.376	25.696
Absorbent energy consumed in base case, 500-MW plant				
Lb absorbent consumed per lb of sulfur removed	4.58	1.98	0.04	0.04
Btu per lb sulfur removed	614	6,697	219	542

TABLE S-4. ENERGY REQUIRED FOR PRODUCTION OF SULFURIC ACID FROM SULFUR

Energy expenditure	Energy required, Btu/lb of sulfur
Sulfur mining (natural gas)	7,940
Sulfur transport (diesel oil)	343
Sulfuric acid production (electricity)	937
Useful heat recovery in sulfuric acid production (steam)	-3,729
Net energy required	5,491

FGD itself requires by far the largest portion of the ground-to-ground energy requirements. The total ground-to-ground energy requirements for each of the absorbents is shown in Table S-5 and Figure S-1.

TABLE S-5. GROUND-TO-GROUND ENERGY REQUIREMENTS ASSESSMENT

Btu/LB SULFUR REMOVED

	Limestone	Lime with onsite calcination	Magnesia -magnesite	Magnesia -seawater
Mining	438	356	25	18
Absorbent processing	-	6,198	161	507
Transportation	176	143	33	17
FGD	14,042	13,165	26,387	26,387
Sludge disposal	22	15	-	-
Total	14,678	19,877	26,658	26,929
Byproduct credit	-	-	(5,491)	(5,491)
Net total	14,678	19,877	21,115	21,438
Btu/kWh	291	395	420	426
% difference from limestone	0	35	44	46
% of total power unit energy output	3.24	4.39	4.67	4.73

Previous energy assessments have been restricted to FGD process energy requirements. The magnesia process has been shown to have energy requirements about twice those of limestone and lime. The ground-to-ground comparison shows a substantially reduced difference in magnesia and limestone energy requirements and it shows almost no difference between magnesia and lime. Principally because of the inclusion of calcining energy for lime and the application of the byproduct sulfuric acid energy credit, the lime process energy requirements on the ground-to-ground basis are about 94% of those for the magnesia process. The result of the change from FGD-only energy to the ground-to-ground energy comparison is shown below.

	Energy requirements as % above lowest process	
	FGD-only	Ground-to-ground
Limestone	7%	0%
Lime	0%	35%
Magnesia (from magnesite)	100%	44%
Magnesia (from seawater)	100%	46%

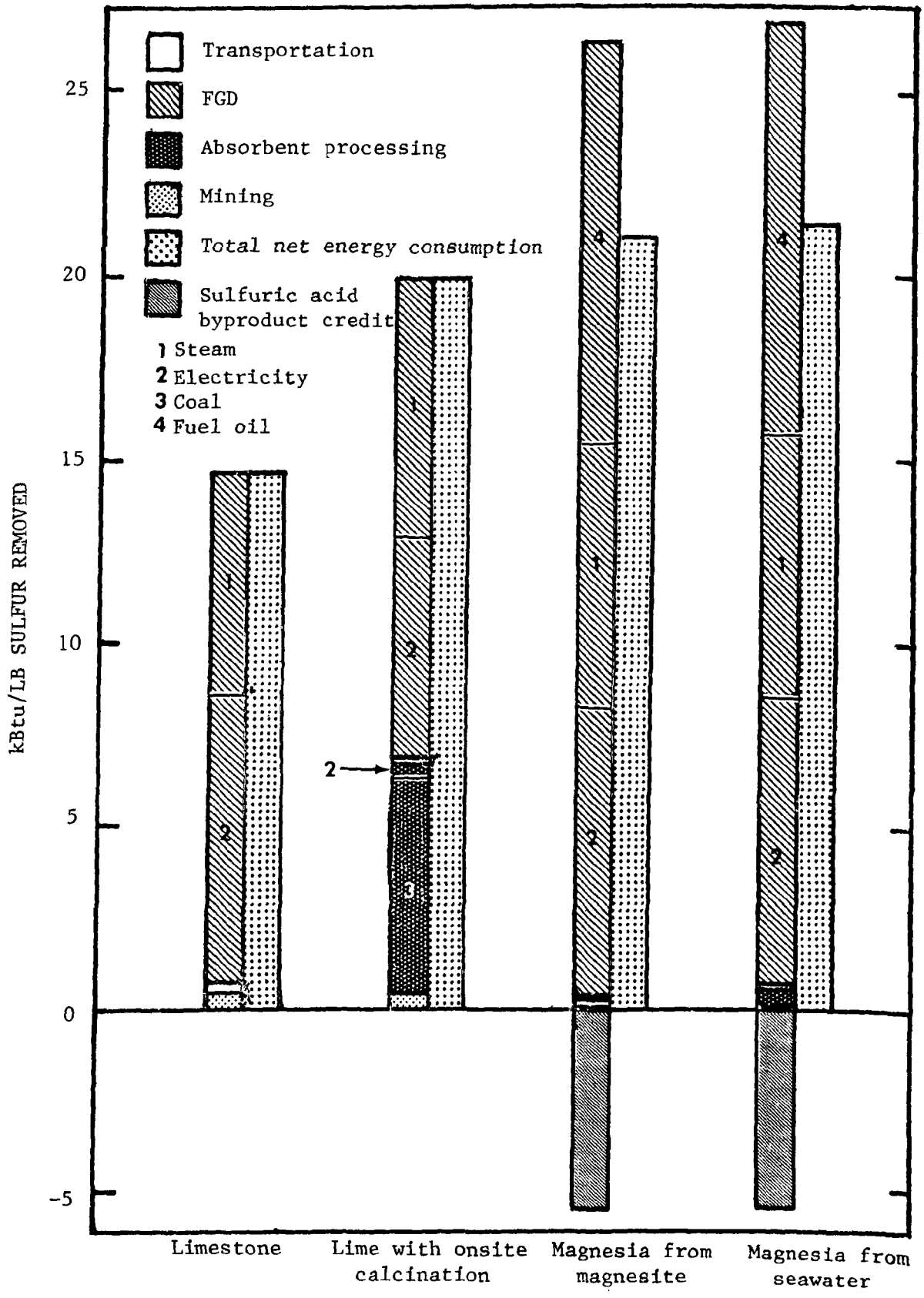

Figure S-1. Total energy requirement per pound of sulfur removed. Base case.

In FGD-only energy, the lime process is lowest and the magnesia process requires twice as much energy. In the ground-to-ground energy, however, the limestone process is lowest, the lime process requires almost as much as the magnesia process, and the magnesia process requires only half again as much as the limestone process. There is still an energy penalty ranging from 1,200 to 6,800 Btu/lb of sulfur removed for production of sulfuric acid as compared with waste-producing processes. It is, however, substantially reduced in ground-to-ground energy requirements as compared with FGD-only energy requirements. Although the limestone slurry process consumes the largest quantity of raw material, the low energy requirements for producing it result in a relatively low ground-to-ground energy requirement. The lime slurry process exchanges relatively modest FGD energy savings for relatively high raw material energy requirements and suffers equivalently in energy-requirement (though not in economic) comparison. Essentially, the lime slurry process, proceeding from the same raw material as the limestone slurry process, exchanges additional energy use and cost for FGD operational and economic benefits.

The magnesia process proceeds further in this direction but compensates for the high raw-material energy requirements by recovering the raw material. On a sulfur-removed basis, therefore, the magnesia process has the lowest raw material energy requirements, which partially compensates for the high FGD energy requirements.

Energy requirements are not proportionally related to FGD costs. (The cost per Btu for fuel oil and coal differ, for example, though either fuel could perform the same function.) In addition, energy consumptions for raw materials are seen only indirectly, as costs, by the power plant operator. Depending on conditions such as location and the combination of mining, processing, and transportation costs, magnesia from seawater could be equal in cost to magnesia from magnesite, although the latter requires only two-fifths the energy to produce. Similarly, the byproduct acid energy credit is seen only as a compensating economic factor on a national energy balance basis. The energy consumptions and credits are thus not directly measurable in terms of FGD economics and are comparable only on the ground-to-ground datum of energy-available - energy-consumed.

The energy penalty for producing sulfuric acid instead of using a waste-producing process can also be compared. Excluding the byproduct energy credit, the energy differences between the limestone and lime slurry processes and the magnesia process are about 12,000 and 7,000 Btu/lb of sulfur removed, respectively, compared to the approximately 5,000 Btu/lb of sulfur removed energy requirement for manufacture of sulfuric acid. In terms of energy requirements, therefore, more than twice as much energy is required to produce byproduct acid by the magnesia process as compared with conventional acid production if the magnesia process is used instead of the limestone slurry process. Only about two-fifths more energy is required if the magnesia process is used instead of the lime slurry process.

CONCLUSIONS

1. The capital investments and annual revenue requirements for all three processes are substantially increased over the results reported in 1975 although the ranking of the three processes has not changed. The magnesia process capital investment has increased at a greater rate than those for the other processes, largely because of modifications and additions in the now more developed magnesia process (such as materials handling changes and chloride purge addition). The range of annual revenue requirements is significantly narrower than the range of capital investments. The base-case revenue requirements difference between the limestone slurry and magnesia processes is under 26% whereas the base-case capital investment for the magnesia process is over 45% greater than that for the lime slurry process.

2. The capital investment costs related to spent-slurry processing in the magnesia process are about three times greater than capital investment disposal costs in the waste-producing processes. Elimination of pond costs does not compensate for the additional equipment requirements of the magnesia process.

3. Lime is the highest cost absorbent in terms of dollars per ton of sulfur removed. The lime slurry process is also the least capital-intensive and therefore benefits less than the others in scale-up economies resulting from increased power plant size or sulfur content of the fuel.

4. The lime slurry process with onsite calcination annual revenue requirements increase less with scale-up than those of the lime slurry process using purchased lime largely because of the improved economics of onsite calcination at the higher rates required for larger power plants or higher sulfur fuel. The minimum power plant size for onsite calcination is approximately 1150 MW using 3.5% sulfur coal. With a coal sulfur content of 5.0%, the minimum power plant size for economical onsite calcination is approximately 750 MW.

5. There are conditions under which the lime slurry process is more economical to operate than the limestone slurry process. The lime slurry process has lower revenue requirements at low raw material consumption levels (small plant size, low-sulfur coal, and low heat rate) and the limestone slurry process has lower revenue requirements at high raw material consumption levels.

6. Power plant size and coal sulfur content have large effects on total costs although unit costs (in terms of sulfur removed) decrease significantly as power plant size increases. Power plant remaining life affects the waste-producing processes (because pond requirements decrease with age) but do not materially affect the magnesia process costs. Increased removal efficiency from 79% to 90% for 3.5% sulfur coal has little effect on costs.

7. In the oil-fired case the magnesia process is nearly economically competitive with the lime slurry process with onsite calcination because the chloride purge is not required. A similar situation would pertain for overall flue gas cleaning in coal-fired cases, particularly at high coal sulfur levels, if chloride purging could be combined with wet-scrubbing fly ash removal at a cost equivalent to ESP costs.

8. The energy consumed per ton of absorbent delivered to the power plant (including mining, processing, and transportation energy) varies almost one hundredfold from limestone (0.27 MBtu per ton) to magnesia from seawater (25.7 MBtu per ton). Because of the differing amounts of absorbents used, however, the ground-to-ground energy requirements of the processes per unit of sulfur removed differ by less than 50%.

9. The byproduct credit for reduced energy consumption caused by the replacement of conventional sulfuric acid production from sulfur with FGD byproduct acid is a significant element of the base-case magnesia process. The application of this energy credit reduces the total ground-to-ground energy requirements of the magnesia process by one-fifth.

10. The lime and limestone scrubbing technologies are the most highly developed and most utilized systems in the United States. The magnesia process, however, is relatively immature and requires additional development and demonstration to determine the long-term effects of contaminant buildup in recycled magnesia, the need for and type of chloride purge, and calcining operation reliability as well as other information which can be developed only with experience in long-term operation of the completely integrated system.

11. If ponding of waste slurry is not practical, the alternative of waste fixation and landfill would require appreciably higher annual revenue requirements and would result in a more attractive comparison for magnesia scrubbing.

DEFINITIVE SO_x CONTROL PROCESS EVALUATIONS:

LIMESTONE, LIME, AND MAGNESIA FGD PROCESSES

INTRODUCTION

Regulations rising from the Clean Air Act of 1967 and its subsequent amendments in 1970 and 1977 have had a fundamental effect on industries using fossil fuels. When making design and economic decisions managers have increasingly turned to consideration of factors affecting the emission of atmospheric pollutants from these fuels. A wide range of technological studies have been initiated to investigate methods of controlling emission of pollutants.

Sulfur oxides (SO_x), predominately sulfur dioxide (SO_2), is one of the main gaseous pollutants created by combustion of fossil fuels and poses a substantial potential threat to health and the environment. The major sources of manmade atmospheric SO_x in the United States are stationary, coal-burning installations, of which the electrical power industry composes the major portion. Over half of the total SO_x emissions in the United States between 1970 and 1975 was emitted by electrical utilities (Electrical World, 1977b). Without controls the condition can easily be exacerbated in the future by increasing reliance on coal for electrical generation (Electrical World, 1977a). Consequently, processes and technologies to control SO_x emissions have received long and intensive study in the power industry.

There are several possible approaches to the control of SO_x emissions from coal-burning plants. One, the use of naturally occurring, low-sulfur coal, is limited by present and future availability. Furthermore, the revised new source performance standards (NSPS) (Federal Register, 1979) which required a minimum of 70% SO_x removal for new power plants, effective September 19, 1978, will preclude the use of low-sulfur coal as the sole SO_x emission control method for future coal-fired boilers. Others such as special combustion techniques, coal processing to remove sulfur, and coal conversion are potentially practical methods but they are not likely to provide general solutions in the near future. Intermittent controls and more efficient dispersal have not met with U.S. Environmental Protection Agency (EPA) approval. The most fully developed and widely used method of SO_x emission control is flue gas desulfurization (FGD) in which the SO_x is removed from the flue gas, usually by a scrubbing process, and converted to a solid waste or sulfur byproduct. There is now a broad spectrum of research, development, and plant demonstration projects in progress that apply FGD technology to SO_x emission control (Kennedy and Tomlinson, 1978).

As a part of this effort, the Tennessee Valley Authority (TVA) has conducted a series of economic and conceptual design studies, many of them in conjunction with EPA, on FGD systems. These evaluations are based on a set of design and economic premises established to permit equitable comparisons between different systems. Both the evaluation processes and the premises are updated and refined as needed to meet increasingly complex requirements as the technology of FGD process develops.

Several of these studies have investigated the limestone, lime, and magnesia scrubbing processes (McGlamery and others, 1973; McGlamery and others, 1975). Since these earlier studies, technical and operating information on these systems has greatly increased. Many full-scale applications of the limestone and lime systems are now in operation and the magnesia process has also been evaluated to a lesser extent in full-scale operation. This study is a continuation of the earlier design and economic evaluations of these processes that incorporates the more developed technologies. An updated evaluation using the same premise basis and incorporating the limestone, double-alkali, and citrate processes has been published (Tomlinson and others, 1979). A third evaluation in this series evaluating recently developed FGD processes is being prepared.

In addition, a special energy requirement assessment of the three systems is included. Energy costs are expected to increase more rapidly than other costs associated with FGD processes. Increases in energy costs relative to other FGD costs could radically change the comparative economics of processes which have different energy requirements. The energy assessment is a ground-to-ground study that includes all energy requirements for raw material mining, preparation, and transportation, as well as direct process energy use. An energy credit for the magnesia process byproduct acid is also included. This represents the energy saved by not producing an equivalent amount of producer acid.

The process data represent the state of technology in mid-1979. All cost estimates are based on the latest available equipment development, design, and economic information. Several visits were made to facilities involved in the production of raw materials in order to assess the energy needs for the materials being produced. Visits were also made to engineering contractor firms, vendors, and power plants to obtain as much firsthand information as possible concerning the systems being studied.

A base-case system is used that permits comparison with previous studies of FGD systems. Several variations from the base case have been prepared to analyze sensitivity of process economics to power plant size and remaining life, sulfur content of coal, and SO_x removal efficiency.

PROCESS BACKGROUND

Interest in FGD first developed to a significant degree during the 1930's especially in England where several full-scale applications of wet-scrubbing limestone systems were made. During the same period a process using magnesia (MgO) was developed by United States and Canadian paper manufacturers to recover waste sulfites, and wet-scrubbing of power plant flue gas with MgO was used in the USSR. Various studies were continued after World War II but it was not until the 1960's, under the impetus of increasing air pollution problems and pending legislation, that intensive studies of FGD technology began. Most early work was concerned with wet-scrubbing using limestone or lime to produce a waste sludge of calcium-sulfur salts. Problems of waste disposal and a more developed technology have led in recent years to other wet-scrubbing processes which regenerate the scrubbing medium and produce a useful sulfur byproduct such as gypsum, sulfuric acid, or sulfur. Many such processes have been developed to various stages, particularly in the United States, and in Japan, which was earliest faced with acute pollution and waste disposal problems. Previous studies of FGD processes treat these developments in greater detail (McGlamery and others, 1973; McGlamery and others, 1975; Tomlinson and others, 1979).

LIMESTONE-LIME SLURRY PROCESSES

The limestone and lime scrubbing processes are similar in design and function. A slurry of finely ground limestone or slaked lime absorbent is circulated through a gas-liquid contact scrubber in the flue gas exhaust system. The SO_x in the flue gas is absorbed and reacts with the absorbent to form insoluble calcium sulfur salts. A purge stream is withdrawn and fresh slurry is added to maintain the desired conditions in the scrubber system. The slurry concentration is generally maintained between 5% and 15% solids and the liquid to gas ratio between 40 and 100 gal/1000 aft^3. Commercial systems are commonly designed for an 80% to 90% removal efficiency. The flue gas is usually treated to remove fly ash and is cooled and humidified before it enters the scrubber system. The scrubbed flue gas can be passed through a mist eliminator and reheated for plume buoyancy before entering the stack. The purge stream of scrubber liquid is often pumped to a waste sludge pond where it settles to a semi-solid sludge of about 40% solids and the excess water is returned to the scrubber system. Processes for treating the effluent to form gypsum or dewatering and treatment to produce a landfill material exist (Rossoff and others, 1978; Duvel and others, 1978). Several scrubber designs and configurations are used, including fixed and variable venturi, mobile bed, spray, and packed types in single and parallel arrays.

The various scrubber designs reflect different approaches to improvements in diffusion-absorption kinetics and to control of scale formation in the system. The scale, consisting of hard buildup of sulfate-sulfite salts, has been a persistent problem in limestone and lime scrubbing processes. Its formation, still not fully understood, is controlled by scrubber design and adjustment of operating conditions such as pH and stoichiometry.

The absorption-reaction process can be simplified by division into steps that illustrate the kinetics of the process.

1. Diffusion of SO_2 to the gas-liquid interface.
2. Absorption of SO_2 by the liquid.
3. Hydrolysis and dissociation of the SO_2 to form sulfite ($SO_3^=$) and bisulfite ($HSO3^-$) ions.
4. Diffusion of the sulfites in the liquid.
5. Hydrolysis and dissociation of limestone or lime to form calcium ions.
6. Reaction of the calcium and sulfite ions to form hydrated calcium sulfite, predominantly the insoluble hemihydrate ($CaSO_3 \cdot 1/2H_2O$).

Depending on the conditions, different steps may control rates, although steps 1, 4, and if limestone is used, 5 are usually controlling. Scrubber design and operating conditions such as gas-liquid ratio and velocities, hold times, and pH are important factors, as are flue gas composition and impurities. Limestone dissociation is improved by fine grinding (at least 70% to pass U.S. Mesh No. 200). Limestone dissociation is also affected by its $MgCO_3$ content and crystal structure. The slow dissociation rate of limestone is compensated for by using higher limestone to SO_2 stoichiometric ratios (1.2 to 1.5:1.0 is usual, compared to about 1.0 to 1.1:1.0 for the more reactive lime).

The actual number of chemical reactions and the range of kinetics are much greater than the steps listed above suggest and are not fully defined in all aspects. In addition to the SO_2 and calcium compounds there are also appreciable quantities of carbon dioxide and free oxygen present as well as other potentially reactive dissolved or suspended impurities. It is believed that the reactive calcium species for both the limestone and lime processes may be calcium bicarbonate--$Ca(HCO_3)_2$--formed by dissolved carbon dioxide as well as the limestone carbonate. The oxygen present oxidizes an appreciable percentage of the sulfites to sulfates, which increases scale formation.

The pH, which controls the equilibrium conditions of the several carbonate and sulfite species present, has important effects on the process chemistry. Absorption of both sulfur dioxide and carbon dioxide, solubilities of the absorbent, and the types and quantities of materials

precipitated are all pH sensitive at the scrubbing conditions used. Lime processes tend to operate at higher pH than the limestone processes. Limestone and lime scrubbing processes generally operate in the 5 to 7 pH range, with the lower part of the range favoring increased absorbent utilization and decreased scale formation.

The scrubbing liquid is thus a complex medium of calcium (and possibly magnesium) sulfur compounds, carbonates, and hydroxides both in solution, some at a high degree of supersaturation, and as variously hydrated solids. The liquid is constantly changed in composition as fresh absorbent is added, flue gas components absorbed, and effluent withdrawn. The many factors of design and operating conditions which control these conditions are a large portion of current technological investigation.

Limestone and lime scrubbing systems represent 80% to 90% of the full-scale FGD systems operating, or under construction in the United States through 1978. Table 1 shows a summary of FGD system status through September 1979. Table 2 shows the name, size, utility identity and vendor for the 46 limestone and lime scrubbing operations in September 1979.

TABLE 1. STATUS OF FGD SYSTEMS IN THE U.S. IN SEPTEMBER 1979

	Operational	Under construction	Contracted	Planned[a]
Limestone or lime	46	35	16	11
Other	10	6	3	33
Total	56	42	19	44
Percent limestone or lime	68	83	84	25

Source: Melia, 1979.

a. Considering limestone, lime, and other FGD systems.

TABLE 2. LIME AND LIMESTONE SYSTEMS IN OPERATION IN THE U.S. - SEPTEMBER 1979

Unit	FGD system size (MW)	Utility	Scrubber vendor	Lime or limestone
Tombigbee 2 & 3	179 each	Alabama Electric Cooperative	Peabody Process Systems	Limestone
Pleasants 1	519	Allegheny Power System	Babcock and Wilcox	Lime
Apache 2 & 3	195 each	Arizona Electric Power Cooperative	Research-Cottrell	Limestone
Cholla 1 & 2	119 & 35	Arizona Public Service	Research-Cottrell	Limestone
Duck Creek 1	378	Central Illinois Light	Riley Stoker/Environeering	Limestone
Conesville 5 & 6	411 each	Columbus and Southern Ohio Electric	Universal Oil Products	Lime
Coal Creek 1	327	Cooperative Power Association	Combustion Engineering	Lime/Alkaline flyash
Elrama 1-4	510	Duquesne Light	Chemico	Lime
Phillips 1-6	410	Duquesne Light	Chemico	Lime
Petersburg 3	532	Indianapolis Power and Light	Universal Oil Products	Limestone
Hawthorn 3 & 4	90 each	Kansas City Power and Light	Combustion Engineering	Lime
La Cygne 1	874	Kansas City Power and Light	Babcock and Wilcox	Limestone
Jeffrey 1	540	Kansas Power and Light	Combustion Engineering	Limestone
Lawrence 4 & 5	125 & 420	Kansas Power and Light	Combustion Engineering	Limestone
Green River 1-3	64	Kentucky Utilities	American Air Filter	Lime
Cane Run 4 & 5	188 & 190	Louisville Gas and Electric	American Air Filter	Lime
Mill Creek 3	442	Louisville Gas and Electric	American Air Filter	Lime
Paddy's Run 6	72	Louisville Gas and Electric	Combustion Engineering	Lime
Milton R. Young 2	405	Minnkota Power Cooperative	ADL/Combustion Equipment Associates	Lime/Alkaline fly ash
Colstrip 1 & 2	360 each	Montana Power	ADL/Combustion Equipment Associates	Lime/Alkaline fly ash
Sherburne 1 & 2	740 each	Northern States Power	Combustion Engineering	Limestone/Alkaline fly ash
Bruce Mansfield 1 & 2	917 each	Pennsylvania Power	Chemico	Lime
Winyah 2	140	South Carolina Public Service	Babcock and Wilcox	Limestone
R. D. Morrow 1 & 2	124 each	South Mississippi Electric Service	Riley Stoker/Environeering	Limestone
Marion 4	184	Southern Illinois Power Cooperative	Babcock and Wilcox	Limestone
Southwest 1	194	Springfield City Utilities	Universal Oil Products	Limestone
Shawnee 10A & 10B	10 each	Tennessee Valley Authority	Universal Oil Products & Chemico	Lime/Limestone
Widows Creek 8	550	Tennessee Valley Authority	Tennessee Valley Authority	Limestone
Martin Lake 1, 2, & 3	595 each	Texas Utilities	Research-Cottrell	Limestone
Monticello 3	800	Texas Utilities	Chemico	Limestone
Hunter 1	360	Utah Power and Light	Chemico	Lime
Huntington	366	Utah Power and Light	Chemico	Lime

Source: Smith, 1979.

MAGNESIA SCRUBBING - REGENERATION

The economics of the magnesia process have been evaluated in two earlier TVA-EPA studies. The results are presented in conceptual design reports published in 1973 (McGlamery and others) and 1975 (McGlamery and others). The results of the latter study indicated that the magnesia process was not then economically competitive with the limestone and lime slurry processes. Interest in the process has since been renewed because site-specific limestone and lime systems are often more costly than generalized systems. They also leave the utility with the difficult problem of sludge disposal and disposal-site reclamation.

The background and chemistry of the various magnesia processes have been extensively discussed in the earlier reports. Basically, the magnesia process used in this study consists of a wet-scrubbing system similar to the limestone and lime processes. A slurry of commercial-grade MgO is contacted with the flue gas to form magnesium-sulfur salts. A purge stream is removed and fresh magnesia slurry added to maintain the desired concentrations. Because of the high cost of the MgO, however, it must be regenerated to make the process economically practical. The regeneration process consists of removing and drying the effluent solids and calcining them to produce MgO and SO_2. The SO_2 can be further processed to sulfuric acid.

The use of MgO and a regeneration system provides some technical advantages and some restrictions. The MgO is more reactive than limestone or lime and has a low scaling potential, thus providing a wider scope for scrubber design and operating conditions. As a closed system, however, provision has to be made to reduce the buildup of impurities such as fly ash and chlorides.

The same simplified steps applied to the limestone and lime processes can be applied to the magnesia scrubbing process. The MgO, hydrolized to magnesium hydroxide [$Mg(OH)_2$] during slurrying, reacts with sulfite and bisulfite in solution to form insoluble sulfites. Both magnesium sulfite hexahydrate [$MgSO_3 \cdot 6H_2O$] and magnesium sulfite trihydrate [$MgSO_3 \cdot 3H_2O$] are formed in quantities dependent upon the operating characteristics of the specific facility (Lowell and others, 1977). Representative overall reactions are:

$$Mg(OH)_2 + 5H_2O + SO_2 \rightarrow MgSO_3 \cdot 6H_2O \text{ (ppt)}$$

$$Mg(OH)_2 \cdot 6H_2O + SO_2 \rightarrow Mg(HSO_3)_2 + 5H_2O$$

$$Mg(HSO_3)_2 + MgO + 11H_2O \rightarrow 2MgSO_3 \cdot 6H_2O \text{ (ppt)}$$

$$Mg(HSO_3)_2 + MgO + 5H_2O \rightarrow 2MgSO_3 \cdot 3H_2O \text{ (ppt)}$$

Some oxidation of the $MgSO_3$ occurs through reaction with absorbed oxygen:

$$2MgSO_3 + O_2 \rightarrow 2MgSO_4 \cdot H_2O$$

Solids in the effluent, consisting of hydrated $MgSO_3$ and $MgSO_4$ are separated from the liquid, dried to remove both free water and water of hydration, and calcined under controlled conditions to produce MgO and SO_2. The MgO is recycled to the scrubber system and the SO_2 is converted to sulfuric acid in a separate plant.

The magnesia scrubbing process has not been developed to the same extent as the lime and limestone processes. There are no commercial-scale units in full-time operation. Three demonstration-scale plants have been operated over the past 6 years, however, and have provided a considerable amount of information needed to define process equipment and operating condition requirements.

The Boston Edison Company operated a 150-MW magnesia scrubbing facility from April 1972 through June 1974 at their 2.5% sulfur oil-fired Mystic 6 station. The research prototype was not operated on a routine basis. It experienced severe maintenance problems in the first year. The system also experienced problems with MgO losses although it was promising in the areas of SO_2 removal and in the absence of scale buildup and plugging.

Operation of the 95-MW magnesia scrubbing system at the 2.0% sulfur coal-fired Dickerson station of Potomac Electric Power Company on an intermittent basis between September 1973 and August 1975 was also impeded by problems. MgO slaking and handling was difficult because of differences between the regenerated and virgin MgO which were alternately fed to the system. Scaling problems were not encountered, but erosion and corrosion of carbon steel pumps and piping were severe. SO_2 removal was adequate.

The magnesia facility at the 2.3% sulfur coal-fired Eddystone Station of Philadelphia Electric was put onstream in late 1975. Problems similar to those experienced at the other two demonstration plants have occurred. The unit has operated intermittently since startup. A second magnesia system is planned for the Eddystone station.

A full-scale 600-MW magnesia scrubbing facility complete with a regeneration system for sulfuric acid production is being planned by TVA for the Johnsonville Steam Plant. The latest available technology will be incorporated into the design of the facility. The conceptual design presented in this report also represents current technology but does not exactly parallel the TVA design because of the site-specific nature of the Johnsonville project.

DESIGN, ECONOMIC, AND ENERGY PREMISES

This study compares the economics of the three FGD systems using conditions that are representative of projected industry conditions. The premises used in this study have been developed by TVA, EPA, and others during similar economic evaluations made since 1967.

The premises are designed to establish base-case efficiencies, process flow rates, and other operating and design conditions. Case variations are used to determine the sensitivity of costs to changes in plant size, new versus existing plants, sulfur in coal, and SO_x removal efficiency. Because of the decreased emphasis on oil as a utility fuel, only one oil-fired variation is included. The economic premises are designed to include the many factors affecting FGD costs. Energy premises are designed to compare the overall energy requirements of the alternate FGD systems. They include not only the energy expended in the FGD processes but also the energy required to mine, process, and deliver the raw materials. A byproduct energy credit is included for the magnesia FGD process. This represents the energy for production of an equivalent quantity of producer acid.

The FGD systems are assumed to begin downstream from the fly ash removal system and to end at the stack plenum. Fly ash removal and disposal and a stack plenum are considered necessary power plant facilities and are not included in the FGD costs.

DESIGN PREMISES

The utility plant design and operation is based on Federal Energy Regulatory Commission (FERC) historical data and TVA experience. The conditions used are representative of a typical modern boiler less than 10 years old for which FGD systems would most likely be considered. A midwestern location typical of Illinois, Indiana, and Kentucky is used because of the concentration of medium to high sulfur coal supplies and power plants in that area.

Emission Standards

NSPS established by EPA (Federal Register, 1971) specify a maximum emission, based on heat input, of 0.10 lb/MBtu for particulate matter and 1.2 lb/MBtu for SO_2 in large coal-fired utility boilers. The process design premises used for this study are based on compliance with these

standards. The revised NSPS (Federal Register, 1979) are not used in this study because boilers existing in the time frame used (through 1983) will not be affected by this more stringent standard.

Actual SO_x removal efficiencies required to meet emission standards vary according to the sulfur content of the coal. Table 3 shows the efficiencies calculated for the sulfur contents and combustion conditions used in this study. In addition, a case variation is included to evaluate the effect of 90% SO_x removal efficiency on costs.

TABLE 3. REQUIRED REMOVAL EFFICIENCIES

Sulfur content of fuel, %	Degree of particle removal, wt %	Degree SO_2 removal, %
Coal-fired units		
2.0	99.5	62.7
3.5	99.5	78.5
5.0	99.5	85.0
Oil-fired units		
2.5	-	69.8

Fuels

The coal compositions are composites of several hundred samples representing major U.S. coal production areas. To represent the range of sulfur contents in coals now being burned, sulfur contents of 2.0%, 3.5%, and 5.0%, dry basis, are used. The coal has a heating value of 10,500 Btu/lb, as fired, and an ash content of 16%, as fired. The composition and flow rates for the base-case conditions are shown in Table 4.

The oil-fired variation uses a No. 6 fuel oil (Table 5) with 2.5% sulfur and 0.1% ash and with a high heating value of 144,000 Btu/gal.

Power Plant Design

Power units up to 1300 MW in size are operated in the United States today. For new units scheduled for startup through 1980 the sizes range from about 80 MW to 1300 MW (Kidder, Peabody & Co., 1978). Although much of the future power production will be from units of 500 MW or larger, many older units and some new units of 200 MW or less will continue in operation for many years. The choice of unit sizes used in this evaluation is based on this anticipated power unit size distribution.

TABLE 4. COAL COMPOSITIONS AND FLOW RATES AT VARYING SULFUR LEVELS

(500-MW new unit, 9,000 Btu/kWh heat rate, 10,500 Btu/lb high heating value of coal)

Coal components	Base case, 3.5% sulfur (dry basis)		2.0% sulfur (dry basis)		5.0% sulfur (dry basis)	
	Wt %, as fired	Lb/hr, as fired	Wt %, as fired	Lb/hr, as fired	Wt %, as fired	Lb/hr, as fired
Carbon	57.56	246,800	58.03	248,700	56.89	244,000
Hydrogen	4.14	17,700	4.17	17,900	4.09	17,500
Nitrogen	1.29	5,500	1.30	5,600	1.27	5,400
Oxygen	7.00	30,000	7.81	33,500	6.40	27,400
Sulfur	3.12	13,400	1.80	7,700	4.46	19,100
Chlorine	0.15	600	0.15	600	0.15	600
Ash	16.00	68,600	16.00	68,600	16.00	68,600
Water	10.47	46,000	10.74	46,000	10.74	46,000
Total	100.00	428,600	100.00	428,600	100.00	428,600

TABLE 5. OIL COMPOSITION AND FLOW RATE

(500-MW existing unit, 9,200 Btu/kWh heat rate, 2.5% sulfur)

Oil components	Wt %, as fired	Lb/hr
Carbon	83.66	204,100
Hydrogen	11.46	28,000
Nitrogen	0.63	1,500
Oxygen	1.25	3,000
Sulfur	2.50	6,100
Ash	0.10	200
Sediment	0.40	1,000
Total	100.00	243,900

A single, balanced-draft, horizontal, frontal-fired boiler design is used. Particulate matter removal and boiler induced-draft (ID) fans are not included in the FGD costs. The boiler ID fans discharge into a common plenum which is included in the FGD costs. A boiler size of 500-MW output is used for the base case and sizes of 200- and 1000-MW output are used for the case variations. The output does not include power requirements for the FGD system.

Power Plant Operation

An operating life of 30 years is used, based on guidelines suggested by FERC (1968). The operating schedule, based on TVA experience, is shown in Table 6. New units are assumed to have a total operating time of 127,500 hours. Existing units 5 and 10 years old are assumed to have remaining operating times of 92,500 and 57,500 hours respectively.

TABLE 6. ASSUMED POWER PLANT CAPACITY SCHEDULE

Operating year	Capacity factor, %	Annual operating time, hr
1-10	80	7,000
11-15	57	5,000
16-20	40	3,500
21-30	17	1,500
Average for 30-yr life	48.5	4,250

Power plant efficiencies vary with size and status. FERC (1973) data list heat rates for approximate 500-MW power units up to 5 years old, ranging from 8,800 to 12,800 Btu/kWh. Representative heat rates chosen for use in this study are given in Table 7.

TABLE 7. POWER UNIT INPUT HEAT REQUIREMENTS

Size, MW	Status	Heat rate, Btu/kWh
1,000	New	8,700
1,000	Existing	9,000
500	New	9,000
500	Existing	9,200
200	New	9,200
200	Existing	9,500

Flue Gas Composition

Flue gas compositions are based on combustion of pulverized coal using a total air rate to the air preheater equivalent to 133% of the stoichiometric requirement. This includes 20% excess air to the boiler and 13% air inleakage in ducts and at the air preheater. These values reflect operating experience with TVA horizontal, frontal-fired, coal-burning units. It is assumed that 80% of the ash present in coal is emitted as fly ash and 95% of the sulfur in coal is emitted as SO_x. One percent of the SO_x emitted is assumed to be SO_3 and the remainder SO_2.

The base-case flue gas composition and flow rates calculated from these conditions are shown in Table 8. The estimated flue gas compositions for power unit emissions at varying fuel-sulfur levels before fly ash removal and FGD are given in Table 9. Calculated flue gas and equivalent SO_2 emission rates are listed in Table 10.

TABLE 8. CALCULATED BASE-CASE FLUE GAS COMPOSITION AND FLOW RATE

Flue gas components	Lb/hr	Aft^3/min (300^oF)
N_2	3,450,000	1,138,000
O_2	258,200	74,590
CO_2	904,200	189,900
SO_2	25,130	3,626
SO_3	317	37
NO_x (as NO)	3,009	927
HCl	661	168
H_2O	264,500	135,600
Total	4,906,000	1,543,000

TABLE 9. FLUE GAS COMPOSITIONS FOR POWER UNITS WITHOUT EMISSION CONTROL FACILITIES

Flue gas components, % by vol	Fuel and boiler type: Coal-fired boiler (horizontal frontal fired) Sulfur content of fuel, % by wt (dry basis) 2.0	3.5	Oil-fired boiler (tangential fired) 5.0	2.5
N_2	73.68	73.76	73.80	73.60
O_2	4.83	4.83	4.84	2.54
CO_2	12.44	12.31	12.20	11.96
SO_2	0.14	0.24	0.34	0.13
SO_3	0.0014	0.0024	0.0034	0.0013
NO_x (as NO)	0.06	0.06	0.06	0.02
HCl	0.01	0.01	0.01	-
H_2O	8.84	8.79	8.75	11.75
Fly Ash Loading				
Gr/sft^3 (dry)	6.67	6.65	6.66	0.036
Gr/sft^3 (wet)	6.08	6.06	6.08	0.032

Scrubber Design

Scrubber design criteria are based on TVA operating experience, general power industry operating experience, and information from process and equipment vendors. The designs are generic to the extent that they represent most-proven technology rather than a particular existing installation, although demonstrated, full-scale operational data predominate. The limestone and lime processes are based on experience at the Shawnee Steam Plant EPA Test Facility, extensive power industry experience with these processes, and vendor information. The magnesia process is based on design data for the TVA Johnsonville magnesia process, on power industry experience, and vendor information.

The 200-MW boiler size is provided with two scrubber trains; the 500-MW and 1,000-MW boiler sizes are provided with four each. All of the trains are fed from the common plenum. An additional total pressure drop of 15 inches H_2O is assumed for the FGD systems. A booster fan of this capacity is provided in each train.

Presaturators are used in the limestone and lime processes to cool and humidify the flue gas. In the magnesia process chlorides are removed by scrubbing before SO_2 scrubbing. This also serves to presaturate the

TABLE 10. POWER PLANT FLUE GAS AND SO_2 RATES

Power plant size, MW	Type plant	Sulfur content of fuel, % (dry basis)	Gas flow to FGD systems, aft^3/min (300°F)	Equivalent SO_2 emission rate to FGD systems, lb SO_2/hr
Coal-fired units				
200	Existing	3.5	652,000	10,610
200	New	3.5	631,000	10,270
500	Existing	3.5	1,577,000	25,690
500	New	2.0	1,539,000	14,500
500 (base case)	New	3.5	1,543,000	25,130
500	New	5.0	1,539,000	35,920
1,000	Existing	3.5	3,085,000	50,250
1,000	New	3.5	2,982,000	48,580
Oil-fired unit				
500	Existing	2.5	1,313,000	12,060

flue gas. The assumed percentages of flue gas components removed in the chloride scrubber are:

Component	% removal
SO_2	5
SO_3	50
HCl	100

In the limestone and lime processes the presaturator wastes are discarded in the scrubber waste streams. In the magnesia process the chloride scrubber waste is discarded in the ash disposal pond.

The scrubbers are equipped with chevron-type mist eliminators which reduce the entrained moisture content of the scrubbed gas to 0.1%. This is desirable to reduce the reheating load, decrease deposition and corrosion in downstream equipment, and reduce particulate matter emission.

Operating conditions for the scrubbers are shown in Table 11. These conditions are used for both the base case and the case variations. Scaling factors based on gas and product rates are used to adjust sizes for conditions other than the base case.

TABLE 11. SCRUBBER OPERATING CONDITIONS

[500-MW units, 3.5% sulfur in coal (dry basis), 1.2 lb SO_2/MBtu heat input allowable emission]

Operating conditions	Process		
	Limestone	Lime	Magnesia
Stoichiometry	1.30	1.05	1.05
Design gas velocity, ft/sec			
SO_2 scrubber	12.5	12.5	12.5
L/G, gal/kft^3			
Presaturator	4	4	-[a]
SO_2 scrubber, recycle liquor	50	45	10
Design pressure drop, inches H_2O	13	13	15
Oxidation of removed SO_2 to $SO_4^=$, %	20	20	5

a. Proprietary information.

The scrubber design is assumed to be proven. No provisions are made for additional spares or special sizing to compensate for uncertain design and operating factors. In the integration of the scrubber system with the boiler, provision for turndown and maintenance is limited to provision of the common plenum with dampers to allow individual trains to be shut down. Scrubber bypass ducts are not provided.

Reheat

Reheat of the scrubbed flue gas to 175°F is provided for plume buoyancy, reduced opacity, and to prevent fan and stack corrosion. Indirect steam heat, before the flue gas enters the stack plenum, is used for coal-fired units. Direct-fired oil reheat is used for the oil-fired case.

Raw Materials

The raw materials used for each process are listed below. Limestone is crushed and wet ground as part of the scrubbing operation. The other materials are not processed before use.

Property	Limestone	Lime	MgO
Size as received	0-1-3/4 inch	3/4-1-1/4 inch	Crystalline powder
Ground size	70% to pass 200 mesh	-	-
Analysis	90% $CaCO_3$	95% CaO	98% MgO
Bulk density, lb/ft^3	95	55	20-30

Waste Disposal

The limestone and lime system sludge disposal consists of pumping the 15% solids sludge to an earthen-diked, clay-lined pond located 1 mile from the plant site. The pond is designed to minimize the total of construction and land cost. It is sized for the remaining life of the power plant, based on seepage and evaporation losses equal to rainfall and reuse of excess water resulting from natural compaction of the waste to 40% solids.

Provision for waste disposal for the magnesia system is provided by the ash pond which is part of the power plant ash system. A portion of the ash pond cost is allocated to the FGD system to account for the additional waste disposal cost.

Case Variations

Case variations, consisting of a change in one design premise while holding the remaining premises at the base-case conditions, are used to determine the economic effects of ranges of conditions normally encountered in industry practice. The case variations used are shown below:

Premise condition	Base case	Case variation
Power plant size, MW	500	200, 1000
Power plant remaining life, years	30 (new)	25, 20
Coal, percent sulfur (dry weight)	3.5	2.0, 5.0
SO_x, percent removal	79	90
Oil, weight percent sulfur	-	2.5

The relative quantities of gas and sulfur processed compared with the base-case quantities are shown in Table 12. The relative throughput rates are used to calculate an area scale factor which multiplied by the base case area direct investment gives the corresponding area direct investment for the case variation. The area investments for the case variations are exponentially scaled by the relative throughput using a weighted average scaling exponent calculated from the base case equipment investment. Areas processing flue gas are scaled on the basis of relative gas throughput and byproduct processing areas are scaled on the basis of relative sulfur throughput. Table 12 shows the relative gas and product throughput rates for each case variation in comparison with the base-case quantities. The direct, indirect, fixed, and total capital investments are then calculated by the same procedure described later for the base-case investment (Tomlinson and others, 1979).

ECONOMIC PREMISES

The economic premises are divided into capital investment costs for installation of the system and annual revenue requirements for its operation over the life of the power plant. The premises are further divided into sections to establish cost areas for comparison and analysis. Criteria are used which define cost indexes, land, raw material, utility, energy costs, capital charges, and other factors required for comparative results. The estimates are made using equipment lists, flow diagrams, material balances, various layouts for electrical equipment, piping and instrumentation, plot plans, and other design and operating information. Cost information is obtained from engineering-contracting, processing, and equipment companies, TVA purchasing and construction data, and authoritative publications on costs and estimating [such as Guthrie (1969), Peters and Timmerhaus (1968), Popper (1970), and The Richardson Rapid System (1979)].

The premises are designed to represent projects in which design begins in mid-1977 and construction is completed in mid-1980, followed by a mid-1980 startup. Capital costs are assumed 50% expended in mid-1979. Capital costs are projected to mid-1979 and revenue requirements are projected to mid-1980. Scaling to other time periods can use mid-1979 as the basis for capital costs and mid-1980 as the basis for revenue requirement.

TABLE 12. RELATIVE QUANTITIES OF GAS AND SULFUR TO BE PROCESSED IN COMPARISON WITH THE BASE-CASE QUANTITIES

	Relative throughput rate, %	
	Gas	Sulfur removed
Coal-Fired Power Unit		
1.2 lb SO_2/MBtu heat input allowable emission		
200 MW E 3.5% sulfur	42.22	42.22
200 MW N 3.5% sulfur	40.89	40.89
500 MW E 3.5% sulfur	102.22	102.22
500 MW N 2.0% sulfur	100.00	46.01
500 MW N 3.5% sulfur	100.00	100.00
500 MW N 5.0% sulfur	100.00	153.81
1,000 MW E 3.5% sulfur	200.00	200.00
1,000 MW N 3.5% sulfur	193.33	193.33
90% SO_2 removal		
500 MW N 3.5% sulfur	100.00	113.92
Oil-Fired Power Unit		
0.8 lb SO_2/MBtu heat input allowable emission		
500 MW E 2.5% sulfur	84.70	44.08

The premises are based on regulated utility economics. The capital structure is assumed to be 60% debt and 40% equity. Interest on bonds is assumed to be 10% and the return to stockholders 14%.

Capital Costs

Capital costs are categorized as direct investment, indirect investment, contingency, other capital charges, land costs, and working capital. Total fixed investment consists of the sum of direct and indirect capital costs and a contingency based on direct and indirect investment. Total depreciable investment consists of total fixed investment plus the other capital charges. Investment costs are projected from historical Chemical Engineering (1975, 1976) annual cost indexes as shown in Table 13. The costs are based on construction of a proven design and an orderly construction program without delays or overruns.

TABLE 13. COST INDEXES AND PROJECTIONS

Year	1974	1975	1976[a]	1977[a]	1978[a]	1979[a]	1980[a]	1981[a]
Plant	165.4	182.4	197.9	214.7	232.9	251.5	271.6	293.3
Material[b]	171.2	194.7	210.3	227.1	245.3	264.9	286.1	309.0
Labor[c]	163.3	168.6	183.8	200.3	218.3	237.9	259.3	282.6

a. Projections. Although actual cost indexes are available for 1976-1978, TVA continues to use its projections for these years so that consistency with past estimates is maintained.
b. Same as index in Chemical Engineering for "equipment, machinery, supports."
c. Same as index in Chemical Engineering for "construction labor."

Direct Investment--

Direct capital costs include all costs, excluding land, for materials and labor to install the complete FGD system. Included are site preparation, excavation, buildings, storage facilities, landscaping, paving, and fencing. One mile of paved road is also included. Process equipment includes all major equipment and all equipment ancillary to the major equipment, such as piping, instrumentation, electrical equipment, and vehicles. Services, utilities, and miscellaneous costs involved in construction are estimated as 6% of the direct investment excluding pond construction costs.

Indirect Investment--

Indirect investment costs consist of various contractor charges and fees and construction expenses. The following cost divisions and determinations are used.

Engineering design and supervision--This cost is calculated as a function of the complexity of the system as determined by the number of major equipment items. Battery limit package units and disposal ponds are treated separately because of the different engineering design aspects involved. The formula used is:

$$\text{Engineering design and supervision} = (8900)(1.294)(\text{number of major equipment items}) + (\text{status factor})(\text{battery limit investment}) + (0.076)(\text{direct pond investment, in M\$})^{0.07}$$

The status factor for the battery limit package unit is 0.05 to 0.15 depending on the commercial status and design reliability of the unit.

Architect and engineering contractor expense--This expense is calculated as 25% of the engineering design and supervision costs for major equipment items and battery limit units plus 10% of engineering design and supervision costs for pond construction.

Construction expense--This expense includes temporary facilities, utilities, and equipment used during construction. The expense is calculated as a function of direct investment:

$$\text{Construction expense} = 0.25\ (\text{direct investment, excluding pond, in M\$})^{0.83} + 0.13\ (\text{pond direct investment, in M\$})^{0.83}$$

Contractor fees--Direct investment is also used to determine contractor fees:

$$\text{Contractor fees} = 0.096\ (\text{total direct investment in M\$})^{0.76}$$

Contingency

Contingency is 20% of the sum of direct investment and indirect investment.

Other Capital Charges

Other capital charges consist of an allowance for startup and modifications and interest during construction. The allowance for startup and modifications is 10% of the total fixed investment. Interest during construction is 12% of the total fixed investment. It is based on the simple interest which would be accumulated at 10% per year under the premise construction and expenditure schedule, assuming a 60% debt, 40% equity capital structure.

Land

Total land requirements, including the waste disposal pond, are assumed to be purchased at the beginning of the project. A land cost of $3,500 per acre is used.

Working Capital

Working capital consists of money invested in raw materials and supplies, products in process, and finished products; cash retained for operating expenses; accounts receivable; accounts payable; and taxes payable. For these premises, working capital is assumed to be the sum of 3 weeks of raw material costs, 7 weeks of direct costs, and 7 weeks of overhead costs.

Annual Revenue Requirements

Annual revenue requirements, based on a 7,000 hour per year operating schedule, use the same operational profile and remaining life assumptions that are used for the power plant design premises. Costs are projected to 1980 dollars to represent a mid-1980 startup. The revenue requirements are divided into direct costs for raw materials and conversion and indirect costs for capital charges and overheads. Net revenue from byproduct sale is applied as a credit.

Direct Costs--

Projected direct costs for raw materials, labor, and utilities are shown in Table 14. Unit costs for steam and electricity are based on actual production costs, including fuel, labor, depreciation, rate base return on investment, and taxes. The charge for electricity used by the FGD system is based on a separate electrical consumer paying full price for service.

TABLE 14. PROJECTED 1980 UNIT COSTS

FOR RAW MATERIALS, LABOR, AND UTILITIES

Raw materials			$/unit
Limestone			7.00/ton
Lime			42.00/ton
MgO			300.00/ton
Natural gas			3.50/kft^3
Catalyst			2.50/liter
Labor			
Operating labor			12.50/man-hr
Analyses			17.00/man-hr
Mobile equipment			17.00/man-hr
Utilities	**200 MW**	**500 MW**	**1000 MW**
Fuel oil (No. 6)			0.40/gal
Steam (500 psig)			2.00/MBtu
Process water[a]			0.12/kgal
Electricity	0.031	0.029	0.028/kWh

a. Varies according to process-dependent water requirements.

Maintenance costs are a function of the direct investment costs. They are adjusted for the size and complexity of the system, based on operating experience with the system or similar operations. Maintenance costs are assumed to be constant over the life of the plant; the increase in costs per hour of operation counteracted by the decline in operating hours. Pond maintenance is treated separately as a constant 3% of the pond construction costs. Maintenance costs are shown in Table 15.

TABLE 15. ESTIMATED OVERALL ANNUAL MAINTENANCE COSTS

Process	% of direct investment excluding pond construction[a]		
	200 MW	500 MW	1000 MW
Limestone	9	8	7
Lime	9	8	7
MgO	8	7	6

a. Pond maintenance is estimated as 3% of pond construction cost.

Indirect Costs--

A summary of capital charges, based on regulated utility economics, is shown in Table 16. Straight-line depreciation is used, based on the remaining life of the power plant when the FGD system is installed. An allowance for interim replacement is included. This allowance is increased from the usual average of about 0.35% because of the unknown life span of FGD systems. The insurance allowance is based on FERC practice. Property taxes are included as 1.5% of the total depreciable capital investment. Cost of capital is based on the assumed capital structure.

Methods of calculating overheads vary. The method used in these premises is based on information from several sources (Guthrie, 1969; The Chemical Engineer's Handbook, 1973; Popper, 1970; and Peters and Timmerhaus, 1968). Plant overhead is assumed to be 50% of the total conversion cost less utilities. Utilities are excluded to avoid over-changing energy-intensive processes. Administrative overhead is assumed to be 10% of the operating labor and supervision cost. Marketing overhead is based on the marketability of the byproduct. For sulfuric acid it is assumed to be 10% of the byproduct revenue.

TABLE 16. ANNUAL CAPITAL CHARGES FOR POWER INDUSTRY FINANCING

Years remaining life	Percentage of total depreciable capital investment		
	30	25	20
Depreciation (straight line, based on years remaining life of power unit)	3.3	4.0	5.0
Interim replacements (equipment having less than 30-year life)	0.7	0.4	-
Insurance	0.5	0.5	0.5
Property taxes	1.5	1.5	1.5
Total rate applied to original investment	6.0	6.4	7.0

	Percentage of unrecovered capital investment[a]
Cost of capital (capital structure assumed to be 60% debt and 40% equity)	
Bonds at 10% interest	6.0
Equity[b] at 14% return to stockholder	5.6
Income taxes (Federal and State)[c]	5.6
Total rate applied to depreciation base	17.2[d]

a. Original investment yet to be recovered or "written off."
b. Contains retained earnings and dividends.
c. Federal and State income taxes are assumed to have the same effect on capital cost as return on equity.
d. Applied on an average basis, the total annual percentage of original fixed investment for new (30-year) plants would be 6.0% + 1/2(17.2%) = 14.6%.

The magnesia process is the only process evaluated in this study that produces a salable byproduct. In the calculation of annual and lifetime economics, credit from the sale of sulfuric acid is deducted from the yearly projection of revenue requirements to give the net cost of the FGD process.

ENERGY PREMISES

The ground-to-ground energy requirements consist of the energy consumed in mining, processing, and transporting the raw materials; the FGD process energy consumption; and an energy credit for byproduct sulfuric acid. The byproduct acid is assumed to replace an equivalent quantity of acid produced from mined sulfur. All raw material energy requirements are based on the quantity of raw materials (limestone, lime, or magnesia) consumed by the base-case, 500-MW power plant FGD system. For the onsite lime calcination plant, however, the raw material energy requirements are calculated on the energy consumption of typical, commercial operations producing larger quantities than those consumed by the FGD system. The magnesia production processes are based on visits to the Basic Refractories (division of Basic, Inc.), Gabbs, Nevada, and Port St. Joe, Florida, magnesia plants. This information was supplemented by information on a 100,000 metric tons per year seawater magnesia plant provided by Kaiser Refractories International. The processes used in this evaluation are generic and represent no particular plant.

For off-highway mobile equipment operation an energy consumption of 0.05 gallons of diesel fuel per horsepower-hour is used (Coal Age, 1979). Limestone processing energy requirements are based on published information (Rock Products, 1979) and contacts with equipment manufacturers, producers, and engineering contractors. Calcination energy requirements are based on information from the Kennedy Van Saun Corporation.

Transportation Energy

The bases for energy requirements for transportation of materials (other than onsite hauling and conveying) are:

Method	Btu/ton-mile
Highway	2,400
Rail	750
Water	500

These rates are from independently published U.S. Corps of Engineers data (American Waterways Operators, 1979).

Highway transportation is assumed for distances of 150 miles or less. Rail is used for distances of over 150 miles. Water is used as the transportation method where applicable, such as elemental sulfur from Port Sulphur, Louisiana. Diesel (No. 2) fuel oil is used as the fuel for all three transportation methods. A specific gravity of 0.86 and gross heating value of 140,000 Btu/gal are assumed for the diesel fuel.

A transportation distance of 32 miles is used for limestone. This is based on the average distance from U.S. limestone-producing counties to existing U.S. power plants. Magnesia transportation distances are based on the distances from existing producers to the midwestern location assumed for the power plant (Chicago is used as the transportation point). Gabbs, Nevada, is the only U.S. site for commercial magnesite mining. Sulfur is assumed to be shipped from Port Sulphur, Louisiana. The transportation distances and methods are:

	Miles	Method
Limestone	32	Truck
Dolomite	250	Rail
Magnesia from magnesite	120/1,700	Truck/rail
Magnesia from seawater	825	Rail
Sulfur	1,349	Water

Limestone

In the quarrying operation an overburden plus spoil ratio of 0.2 tons to 1.0 ton of limestone is used. Drilling is assumed to require 4 hp-hours per ton of limestone. Blasting is assumed to require 2.2 pounds of 30,000 Btu per pound of explosive per ton of limestone. A 90 lb/ft^3 bulk density for the quarry-run product is used. Hauling to the processing plant conveyor by the 250-hp front loader is based on a rate of 20 yd^3 per hour of quarry-run product.

Limestone processing, consisting of crushing and screening, is based on the limestone processing plant described in the Systems Estimated section. The energy requirements are based on the electrical consumption of the equipment.

Lime Calcination

The onsite lime calcination energy requirements are based on the energy consumption of the calcination plant described in the Systems Estimated section. The fuel used is the same coal used in the power plant. The fuel consumption is 6 MBtu per ton of lime. Electricity use is determined in the same manner as the FGD electricity use.

Magnesia From Magnesite

The magnesia from magnesite energy requirements are based on an overburden plus gangue ratio of 1.75 tons per ton of magnesite mined. Drilling and blasting energy is assumed to be the same for overburden, gangue, and ore. Drilling requirements are 0.2 gallons of diesel fuel per ton of material, or 0.55 gallons per ton of magnesite. Blasting energy is based on 2.2 pounds of 30,000 Btu per pound explosive per ton of material, or 6.05 pounds per ton of magnesite. The mine haul conditions are assumed to be the same as the quarry haul conditions used for limestone.

Processing energy requirements are based on the magnesia production plant described in the Systems Estimated section. Diesel fuel is used as the dryer and furnace fuel.

Magnesia From Seawater

The dolomite quarrying energy requirements are assumed to be the same as those determined for limestone quarrying. A ratio of 60 tons of dolomite shipped to 13 tons of magnesia produced is used. The magnesia production energy requirements are based on the process described in the Systems Estimated section.

Byproduct Sulfuric Acid Energy Credit

The energy credit for sulfuric acid is based on the net energy consumed to produce an equivalent quantity of sulfuric acid from Frasch-mined sulfur. The customary ratio of 0.3 long tons (0.268 short tons) of sulfur to 1.0 short ton of sulfuric acid is used.

The energy requirements for Frasch mining are based on the use of 5,000 gallons of 330°F water per long ton of sulfur. The water is assumed heated from 70°F with an overall boiler and thermal transfer efficiency of 70%. Natural gas with a 1,000 Btu/ft^3 gross heating value (920 Btu/ft^3 net heating value) is used as the fuel.

The energy requirements for conversion of the sulfur to sulfuric acid are based on the electrical requirements of a typical dual-absorption contact sulfuric acid plant of 67 kWh per short ton of sulfuric acid (Chemical Construction Corporation, 1970). These energy requirements are reduced by the heat generated and used in the sulfuric acid plant complex. A value of 2.4 MBtu per short ton of sulfuric acid is used. This energy is subtracted from the total mining, transportation, and manufacturing energy consumption to determine the energy credit.

SYSTEMS ESTIMATED

Each system estimate is prepared from the process description, material balance, flow and control diagrams, layout drawings, and equipment requirements which have been developed from vendor information, industry experience, and the premises described in the previous section. For equitable comparison, an area-by-area format has been used which divides each system into similar processing steps. Investment summaries are based on equipment lists which follow the area-by-area pattern. Material costs are shown in mid-1979 dollars for each item. The material balance and equipment list are also used in the preparation of the revenue requirements. Processes for the production of limestone, lime, magnesia from magnesite, and magnesia from seawater are included because their energy requirements are part of the ground-to-ground energy evaluation.

LIMESTONE SLURRY PROCESS

The flow diagram for the limestone slurry process is shown in Figure 1. The plot plan is shown in Figure 2. Plan and elevations of the FGD system are shown in Figure 3. A control diagram is shown in Figure 4.

Delivered limestone, crushed and screened to 0 x 1-1/2 inches at the quarry and containing 90% $CaCO_3$, is unloaded by conveyor and stored in a 30-day stockpile located about 150 feet from the crushing and grinding facilities. The limestone is reduced to about 0 x 3/4 inches using gyratory crushers, wet-ground to 70% minus 200 mesh in 2 parallel ball mills, and stored as a 60% solids slurry in a feed tank with 8-hour storage capacity. The slurry feed tank is located near the absorber system about 1,500 feet from the limestone preparation area. In the absorber recirculation tank makeup limestone slurry is diluted to 15% solids with scrubber effluent slurry and recycled pond water.

A common plenum is situated downstream from the ESP units and the power plant ID fans to distribute the gas to the absorbers. Booster fans are placed between the plenum and the absorber to compensate for the pressure drop created by the FGD system.

Flue gas is cooled to 127°F to 130°F in a presaturator using recycled slurry before entering the mobile-bed absorbers. Limestone slurry, circulating through the absorbers in countercurrent flow to the cooled flue gas, reacts with the SO_2. The scrubbers are operated at a

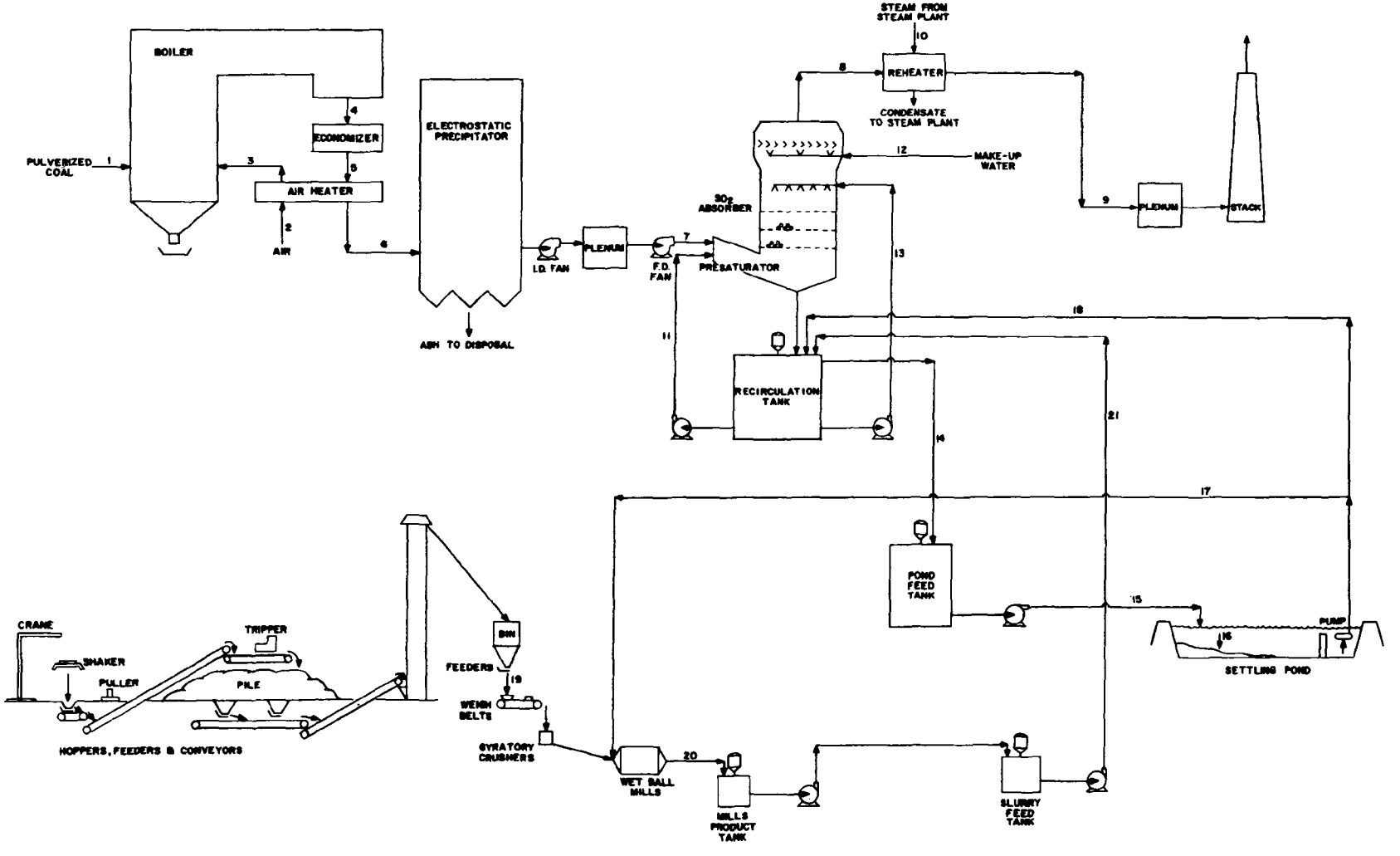

Figure 1. Limestone slurry process. Base-case flow diagram.

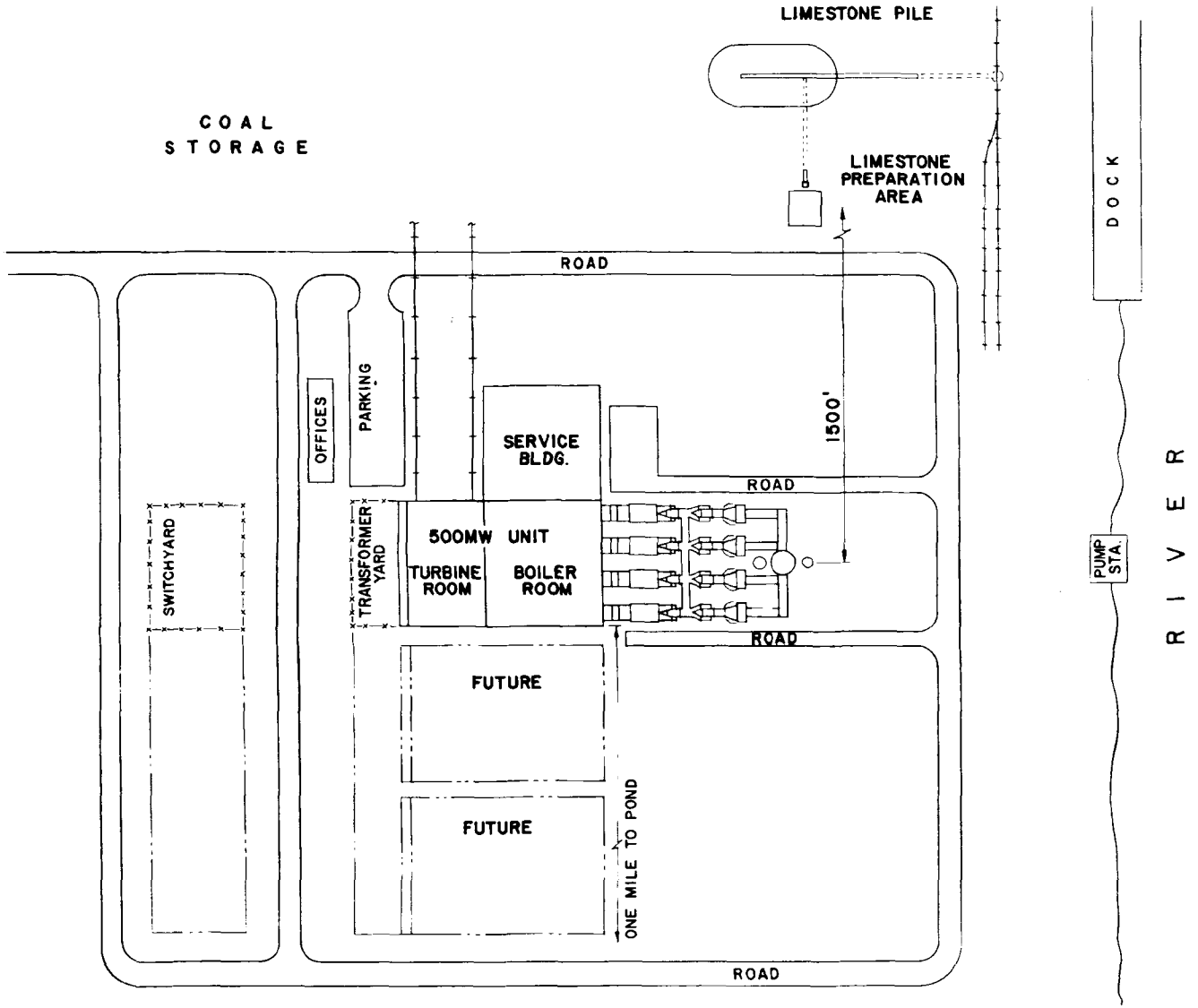

Figure 2. Limestone slurry process. Base-case overall plot plan.

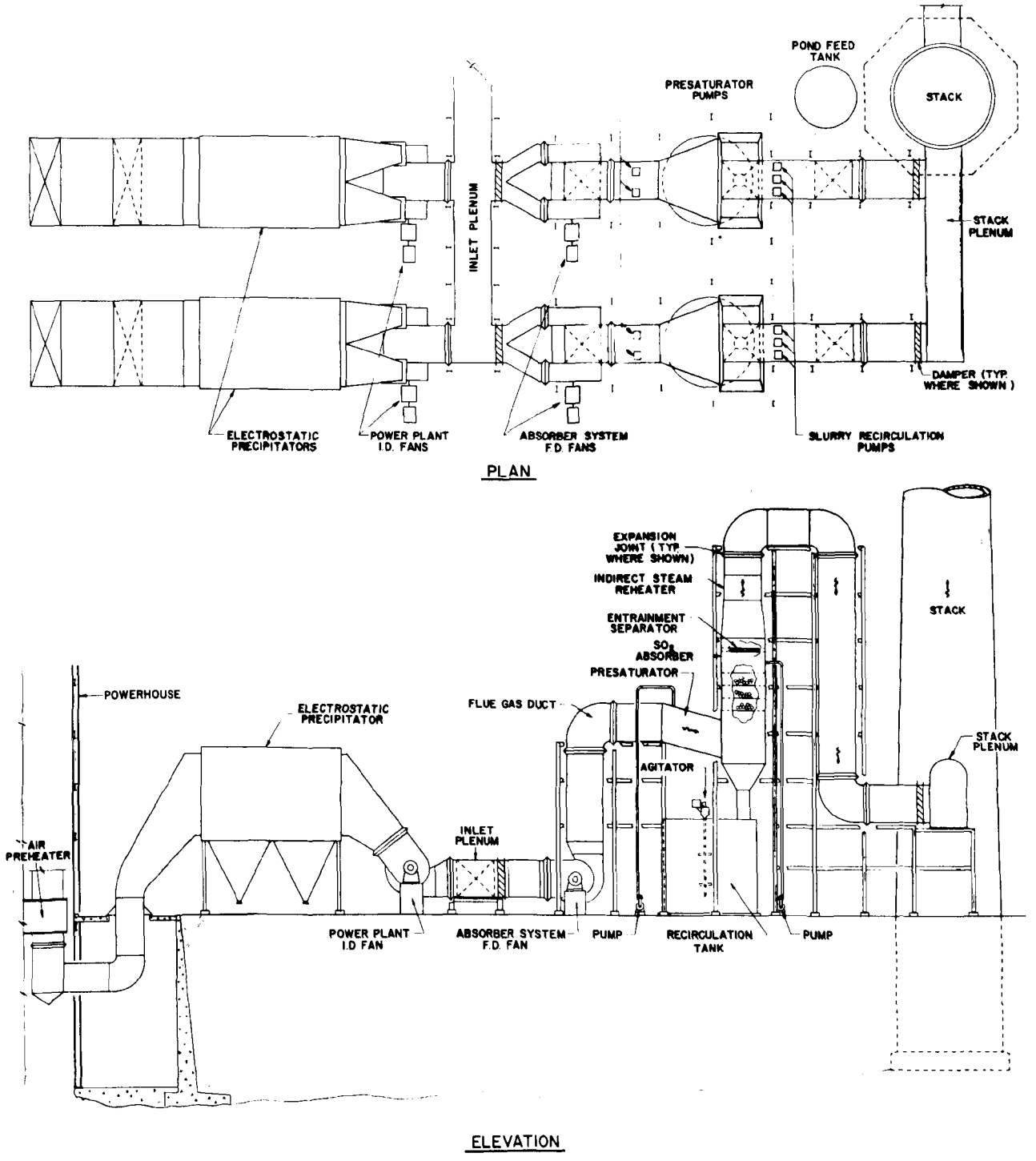

Figure 3. Limestone slurry process.
Mobile-bed scrubber system base-case plan and elevation.

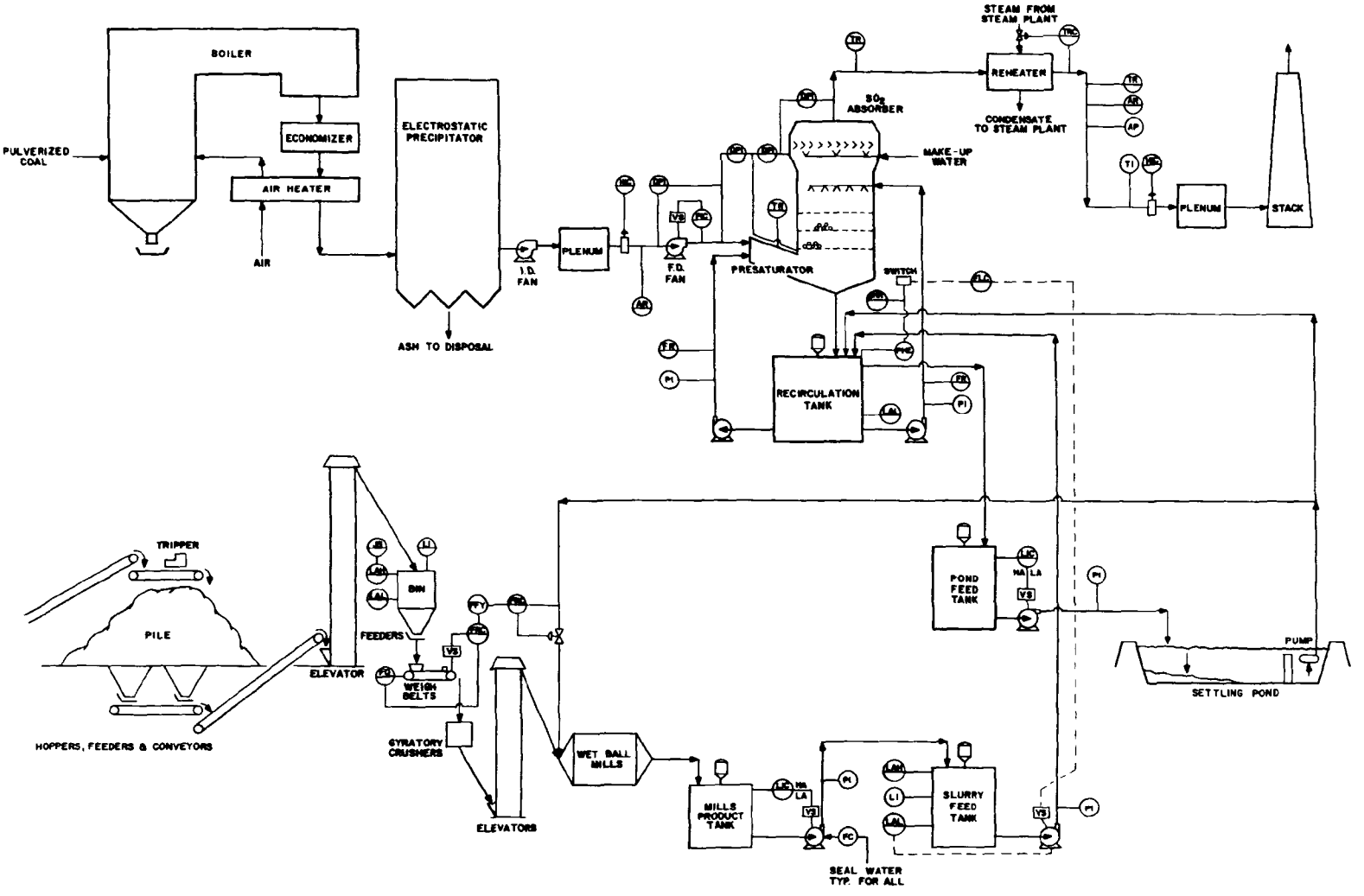

Figure 4. Limestone slurry process. Base-case control diagram.

stoichiometry of 1.3 mols of $CaCO_3$ per mol of sulfur removed. The liquid to gas (L/G) ratio is 50 gallons per 10^3 actual ft^3. The absorbers are equipped with chevron entrainment separators with provisions for top and bottom wash with fresh makeup water. Scrubber outlet gas is reheated to 175°F by indirect steam heat before entering the stack plenum.

A bleedstream from the recirculation tank flows by gravity to the pond feed tank and is pumped one mile to the disposal pond. The slurry settles to a sludge of about 40% solids. Pond supernate is recycled to the wet ball mills and to the absorber recirculation tank to maintain closed-loop operation.

Major Process Areas

The limestone slurry process is divided into the following operating areas:

1. Materials handling: Area equipment consists of hoppers and conveyors to unload limestone to a stockpile and convey it from the stockpile to in-process storage. Rail and truck facilities are provided.

2. Feed preparation: This area contains equipment to reduce limestone to a 70% minus 200 mesh, and prepare a 60% solids slurry feed to the scrubbers. Included are crushers, ball mills, tanks, agitators, and pumps.

3. Gas handling: This area consists of one inlet flue gas plenum interconnecting each of the four flue gas ducts which feed the absorbers and four booster fans to compensate for the pressure drop through the FGD system.

4. SO_2 absorption: Four mobile-bed absorbers, each with a presaturator, recirculation tank, and pump are included.

5. Stack gas reheat: Equipment in this area consists of indirect steam reheaters and soot blowers for the coal-fired cases. The oil-fired case uses a direct oil-fired reheater that discharges directly into the duct on each of the four trains.

6. Solids disposal: This area consists of an agitated pond feed tank, a pond feed pump, transport lines, and a pond return pump.

Storage Capacity

Storage requirements for raw materials and surge capacities for in-process streams are listed below.

Limestone storage - 30-day stockpile
Crusher feed bin - 8 hours
Mills product tank - 20 minutes
Slurry feed tank - 8 hours
Pond feed tank - 1 hour
Recirculation tanks - 10 minutes each (includes sufficient capacity for drain down during shutdown of the scrubbers)

A material balance for the base-case limestone process and a detailed equipment list by area are given in Tables 17 and 18 respectively.

Solids Disposal

Waste slurry containing 15% solids is pumped to the sludge disposal pond one mile from the FGD system. The solids settle to form a sludge of 40% solids. For the base case (new, 500-MW plant burning 3.5% sulfur coal) the line transporting slurry to the pond is a 12-inch, rubber-lined, carbon steel pipe. A spare line to the pond is included. Both lines are trenched. The return line from the pond is a 10-inch, unlined, carbon steel pipe; no spare is included.

Pond Construction

Optimum pond size and depth, which minimizes the sum of land and construction costs for each case, are calculated by computer, based on a square configuration with a diverter dike three-fourths the length of one side. A pond construction diagram is shown in Figure 5. The pond is assumed to be constructed on flat land using fill excavated from the impoundment area for the dikes and lining. A 12-inch lining of impervious clay is provided from local sources. Total pond depth for the base case is 19.6 feet with an excavation depth of 3.0 feet. Pond areas for each case variation are listed in Table 19.

LIMESTONE PRODUCTION

The limestone quarry evaluated in this study is assumed to be a typical operation involving drilling, blasting, materials handling, crushing, and sizing. A flowsheet for the limestone production plant evaluated is shown in Figure 6.

LIME SLURRY PROCESS

The lime slurry process (shown in Figures 7, 8, 9, and 10) is similar to the limestone process except for details of absorbent preparation and process chemistry. Pebble lime is stored in silos sized for 14 days storage and conveyed to an 8-hour process silo which supplies the slakers. The lime is slaked with freshwater and diluted to a 15% solids slurry with recycled pond water in the slaker tank. A slurry feed tank provides 6 hours of storage from which the lime slurry is pumped to recirculation tanks located under the SO_2 absorbers.

TABLE 17. LIMESTONE SLURRY PROCESS

MATERIAL BALANCE

	Stream No.	1	2	3	4	5
	Description	Coal to boiler	Combustion air to air heater	Combustion air to boiler	Gas to economizer	Gas to air heater
1	Total stream, lb/hr	428,600	4,546,200	4,101,800	4,516,000	4,516,100
2						
3						
4	sft^3/min (60°F)		1,005,000	906,700	958,000	958,000
5	Temperature, °F		80	535	890	890
6	Pressure, psig					
7	gpm					
8	Specific gravity					
9	pH					
10	Undissolved solids, %					

	Stream No.	6	7	8	9	10
	Description	Gas to electrostatic precipitator	Gas to presaturator	Gas to reheater	Gas to stack	Steam to reheater
1	Total stream, lb/hr	4,960,400	4,905,800	5,107,400	5,107,400	93,058
2						
3						
4	sft^3/min (60°F)	1,056,000	1,056,000	1,127,000	1,129,000	
5	Temperature, °F	300	300	127	175	470
6	Pressure, psig					500
7	gpm					
8	Specific gravity					
9	pH					
10	Undissolved solids, %					

	Stream No.	11	12	13	14	15
	Description	Recycle slurry for saturation	Makeup water to absorber	Recycle slurry to absorber	Overflow to pond feed tank	Slurry to pond
1	Total stream, lb/hr	2,801,100	291,600	35,014,000	368,300	368,300
2						
3						
4	sft^3/min (60°F)					
5	Temperature, °F					
6	Pressure, psig					
7	gpm	5,088	583	63,602	669	669
8	Specific gravity	1.1		1.1	1.1	1.1
9	pH	5.3		5.3		
10	Undissolved solids, %	15		15	15	15

	Stream No.	16	17	18	19	20
	Description	Settled sludge	Pond water to wet ball mill	Pond water to recirculation tank	Limestone to weigh feeder	Slurry to mills product tank
1	Total stream, lb/hr	138,100	26,600	203,600	45,500	72,000
2						
3						
4	sft^3/min (60°F)					
5	Temperature, °F					
6	Pressure, psig					
7	gpm	209	53	407		89
8	Specific gravity	1.32				1.61
9	pH					
10	Undissolved solids, %	40				60

(continued)

TABLE 17 (continued)

	Stream No.	21				
	Description	Limestone slurry to recirculation tank				
1	Total stream, lb/hr	72,000				
2						
3						
4	sft^3/min (60°F)					
5	Temperature, °F					
6	Pressure, psig					
7	gpm	89				
8	Specific gravity	1.61				
9	pH					
10	Undissolved solids, %	60				

1						
2						
3						
4						
5						
6						
7						
8						
9						
10						

1						
2						
3						
4						
5						
6						
7						
8						
9						
10						

1						
2						
3						
4						
5						
6						
7						
8						
9						
10						

TABLE 18. LIMESTONE SLURRY PROCESS

BASE-CASE EQUIPMENT LIST
DESCRIPTION AND COST

Area 1--Materials Handling

	Item	No.	Description	Total material cost, 1979 $
1.	Car shaker	1	Top mounting with crane	19,900
2.	Car puller	1	25 hp with 5 hp return	46,300
3.	Hopper, limestone unloading	1	12 ft x 20 ft x 2 ft bottom, 20 ft deep, 2,400 ft^3, carbon steel	5,400
4.	Feeder, limestone unloading	1	Vibrating pan, 42 in. wide x 60 in. long, 3 hp, 250 tons/hr	4,400
5.	Conveyor, limestone unloading	1	Belt, 36 in. wide x 10 ft long, 5 hp, 250 tons/hr, 130 ft/min	2,700
6.	Conveyor, limestone stocking (incline)	1	Belt, 36 in. wide x 320 ft long, 30 hp, 15° slope, 250 tons/hr, 130 ft/min	103,700
7.	Conveyor, limestone stocking	1	Belt, 36 in. wide x 200 ft long, 7-1/2 hp, 250 tons/hr, 130 ft/min	54,400
8.	Tripper	1	5 hp, 30 ft/min	21,200
9.	Mobile equipment	1	Dozer, 140 hp	55,300
10.	Hopper, reclaim	2	7 ft x 7 ft x 4 ft deep, 60° slope, carbon steel	800
11.	Feeder, live limestone storage	2	Vibrating pan, 24 in. wide x 40 in. long, 1 hp, 12 tons/hr	6,500
12.	Pump, tunnel sump	2	Vertical, 60 gpm, 70 ft head, 5 hp, carbon steel, neoprene lined	3,900
13.	Conveyor, live limestone feed	1	Belt, 30 in. wide x 100 ft long, 2 hp, 100 tons/hr, 60 ft/min	22,800

(continued)

TABLE 18 (continued)

	Item	No.	Description	Total material cost, 1979 $
14.	Conveyor, live limestone feed (incline)	1	Belt, 30 in. wide x 190 ft long, 5 hp, 35 ft lift, 100 tons/hr, 60 ft/min	47,500
15.	Elevator, live limestone feed	1	Continuous bucket, 12 in. x 8 in. x 11-3/4 in., 20 hp, 75 ft lift, 100 tons/hr, 160 ft/min	24,300
16.	Bin, crusher feed	1	17 ft dia x 17 ft high, w/cover, carbon steel	6,000
17.	Dust collecting system	1	Cyclone, 2,100 aft^3/min, motor driven fan	5,900
18.	Dust collecting system	1	Cyclone, 6,200 aft^3/min, motor driven fan	11,400
19.	Dust collecting system	1	Bag filter, polypropylene bag, 14,400 aft^3/min, automatic shaker system (1/2 cost in feed preparation area)	10,000
	Subtotal			452,400

Area 2--Feed Preparation

	Item	No.	Description	Total material cost, 1979 $
1.	Discharge, feed bin	2	Vibrating, 12 tons/hr, w/cover, carbon steel	8,600
2.	Feeder, crusher	2	Weigh belt, 18 in. wide x 4 ft long, 1-1/2 hp, 12 tons/hr	9,800
3.	Crusher	2	Gyratory, 0 x 1-1/2 to 3/4 in., 50 hp, 12 tons/hr	49,300
4.	Ball mill	2	Wet, open system, 8 ft dia x 13 ft long, 350 hp, 300 tons/day	394,300
	Ball charge			20,100
5.	Hoist	1	Electric, 5 tons	7,900

(continued)

TABLE 18 (continued)

	Item	No.	Description	Total material cost, 1979 $
6.	Tank, mills product	1	9 ft dia x 5 ft high, 2,350 gal, open top, four 9 in. baffles, agitator supports, carbon steel	1,000
	Lining		1/4 in. neoprene lining	900
7.	Agitator, mills product tank	1	36 in. dia, 10 hp neoprene coated	14,100
8.	Pump, mills product tank	2	Centrifugal, 89 gpm, 60 ft head, 7-1/2 hp, carbon steel, neoprene lined	4,200
9.	Tank, slurry feed	1	18 ft dia x 22 ft high, 42,800 gal, open top, four 18 in. baffles, agitator supports, carbon steel	8,300
	Lining		1/4 in. neoprene lining	7,400
10.	Agitator, slurry feed tank	1	3 turbines, 72 in. dia, 75 hp, neoprene coated	64,900
11.	Pump, slurry feed tank	2	Centrifugal, 89 gpm, 60 ft head, 7-1/2 hp, carbon steel, neoprene lined	4,200
12.	Dust collecting system	1	Cyclone, 7,200 aft^3/min, motor driven fan	12,500
13.	Dust collecting system	1	Bag filter, polypropylene bag, 14,400 aft^3/min, automatic shaker system, (1/2 cost in materials handling area)	10,000
	Subtotal			617,500

Area 3--Gas Handling

	Item	No.	Description	Total material cost, 1979 $
1.	Fans	4	Forced draft, 13 in., 890 rpm, 1,250 hp, fluid drive, double width, double inlet	812,000
	Subtotal			812,000

(continued)

TABLE 18 (continued)

Area 4--SO_2 Absorption

	Item	No.	Description	Total material cost, 1979 $
1.	SO_2 absorber	4	Mobile bed, 31 ft long x 14 ft wide x 40 ft high, 1/4 in. carbon steel, neoprene lining; 316 stainless steel grids, nitrile foam spheres, FRP spray headers, 316 stainless steel chevron vane entrainment separator	3,274,100
2.	Tank, recirculation	4	34 ft dia x 26 ft high, 173,500 gal, open top, four 34 in. wide baffles, agitator supports, carbon steel	84,300
	Lining		1/4 in. neoprene lining	73,000
3.	Agitator, recirculation tank	4	100 in. dia, 50 hp, neoprene coated	197,400
4.	Pump, presaturator	6	Centrifugal, 1,274 gpm, 105 ft head, 75 hp, carbon steel, neoprene lined	40,900
5.	Pump, makeup water	2	Centrifugal, 1,168 gpm, 150 ft head, 75 hp, carbon steel	15,200
6.	Pump, slurry recirculation	10	Centrifugal, 7,954 gpm, 105 ft head, 500 hp, carbon steel, neoprene lined	362,400
7.	Soot blowers	40	Air, retractable	260,000
	Subtotal			4,307,300

Area 5--Reheat

	Item	No.	Description	Total material cost, 1979 $
1.	Reheater	4	Steam, tube type, 3,600 ft^2, one-half of tubes made of Inconel 625 and one-half made of Cor-Ten	856,000

(continued)

TABLE 18 (continued)

	Item	No.	Description	Total material cost, 1979 $
2.	Soot blowers	20	Air, retractable	130,000
	Subtotal			986,000

Area 6--Solids Disposal

	Item	No.	Description	Total material cost, 1979 $
1.	Tank, pond feed	1	13 ft dia x 26 ft high, 25,800 gal, open top, agitator supports, four 13 in. baffles, carbon steel	7,500
	Lining		1/4 in. neoprene lining	5,900
2.	Agitator, pond feed tank	1	2 turbines, 52 in. dia, 7-1/2 hp, neoprene coated	12,000
3.	Pumps, pond feed	2	Centrifugal, 669 gpm, 100 ft head, 50 hp, carbon steel, neoprene lined	11,200
4.	Pumps, pond return	2	Centrifugal, 458 gpm, 100 ft head, 30 hp, carbon steel	7,100
	Subtotal			43,700

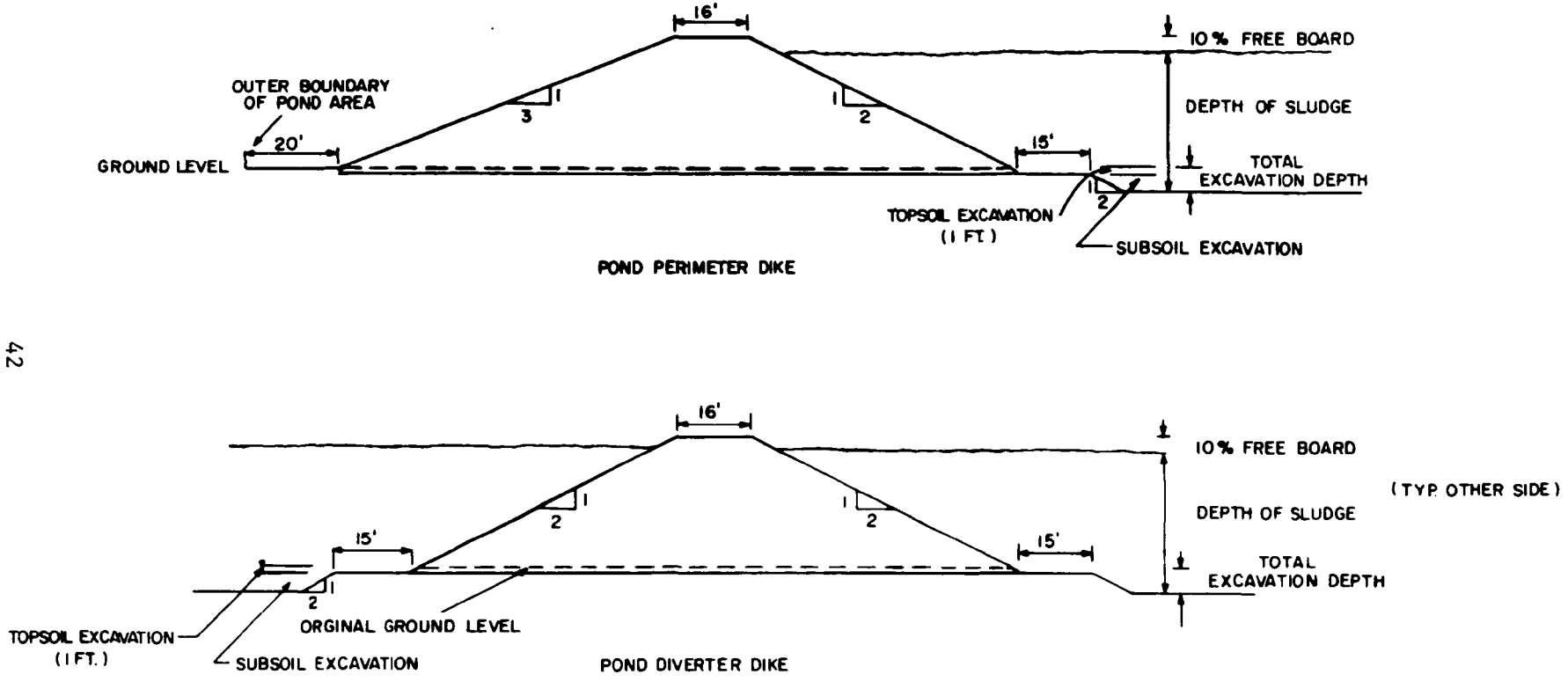

Figure 5. Pond construction diagram.

TABLE 19. LIMESTONE SLURRY PROCESS

ACREAGE REQUIRED FOR WASTE SOLIDS DISPOSAL

Case	Years remaining life	Acres
Coal-Fired Power Unit		
1.2 lb SO_2/MBtu emission		
200 MW E[a] 3.5% sulfur	20	79
200 MW N[b] 3.5% sulfur	30	142
500 MW E 3.5% sulfur	25	227
500 MW N 2.0% sulfur	30	155
500 MW N 3.5% sulfur	30	287
500 MW N 5.0% sulfur	30	424
1000 MW E 3.5% sulfur	25	383
1000 MW N 3.5% sulfur	30	480
90% SO_2 removal		
500 MW N 3.5% sulfur	30	329
Oil-Fired Power Unit		
0.8 lb SO_2/MBtu emission		
500 MW E 2.5% sulfur	25	110

a. E is existing coal-fired unit.
b. N is new coal-fired unit.

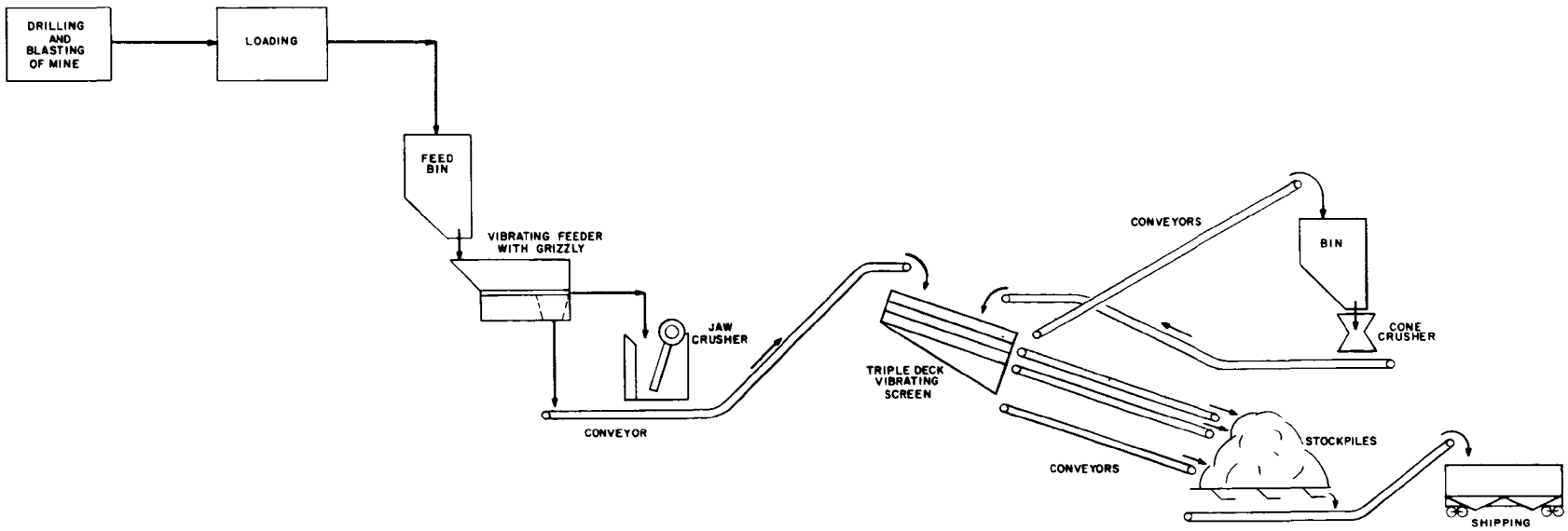

Figure 6. Limestone mining and processing flow diagram.

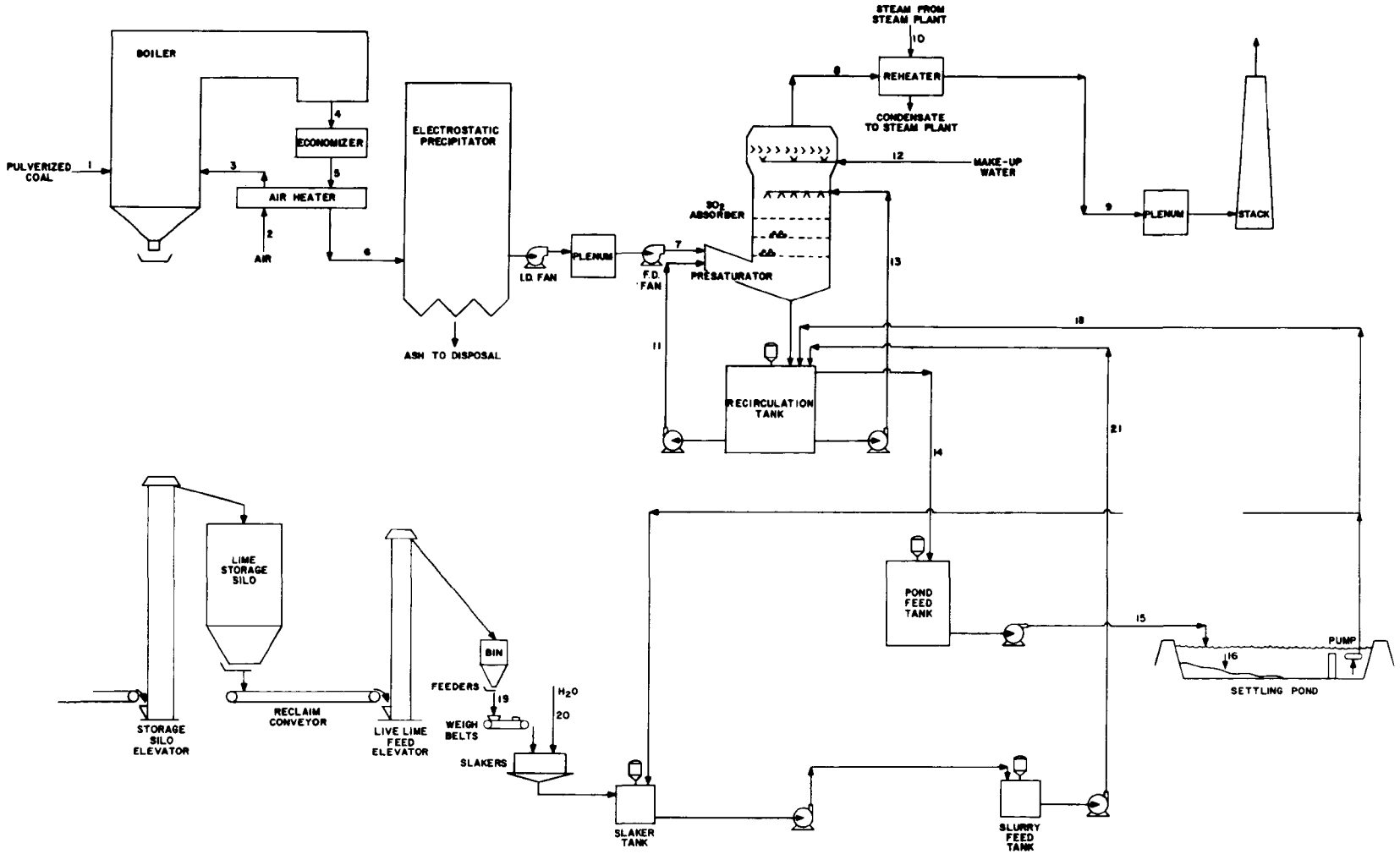

Figure 7. Lime slurry process. Base-case flow diagram.

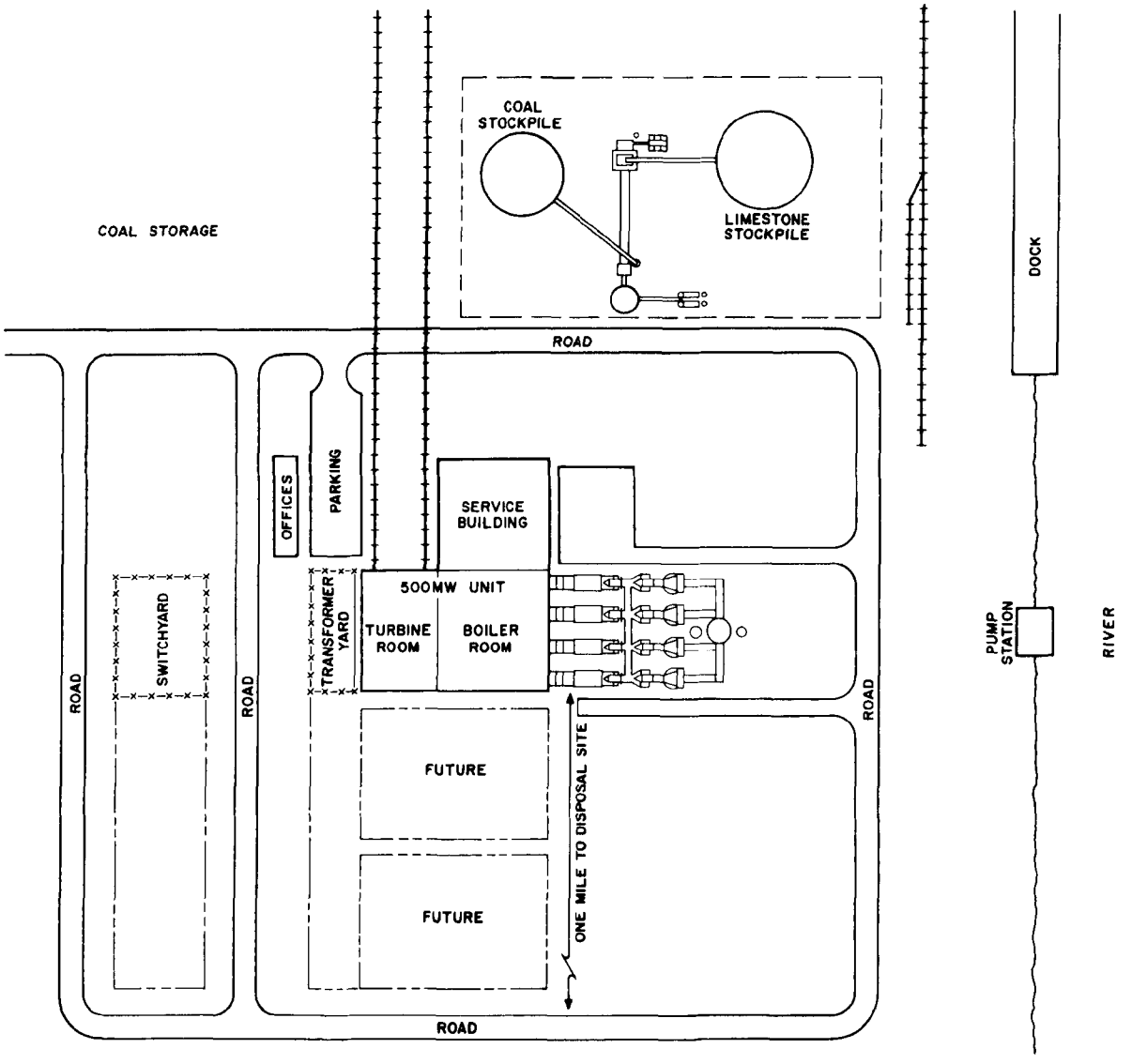

Figure 8. Lime slurry process. Base-case overall plot plan.

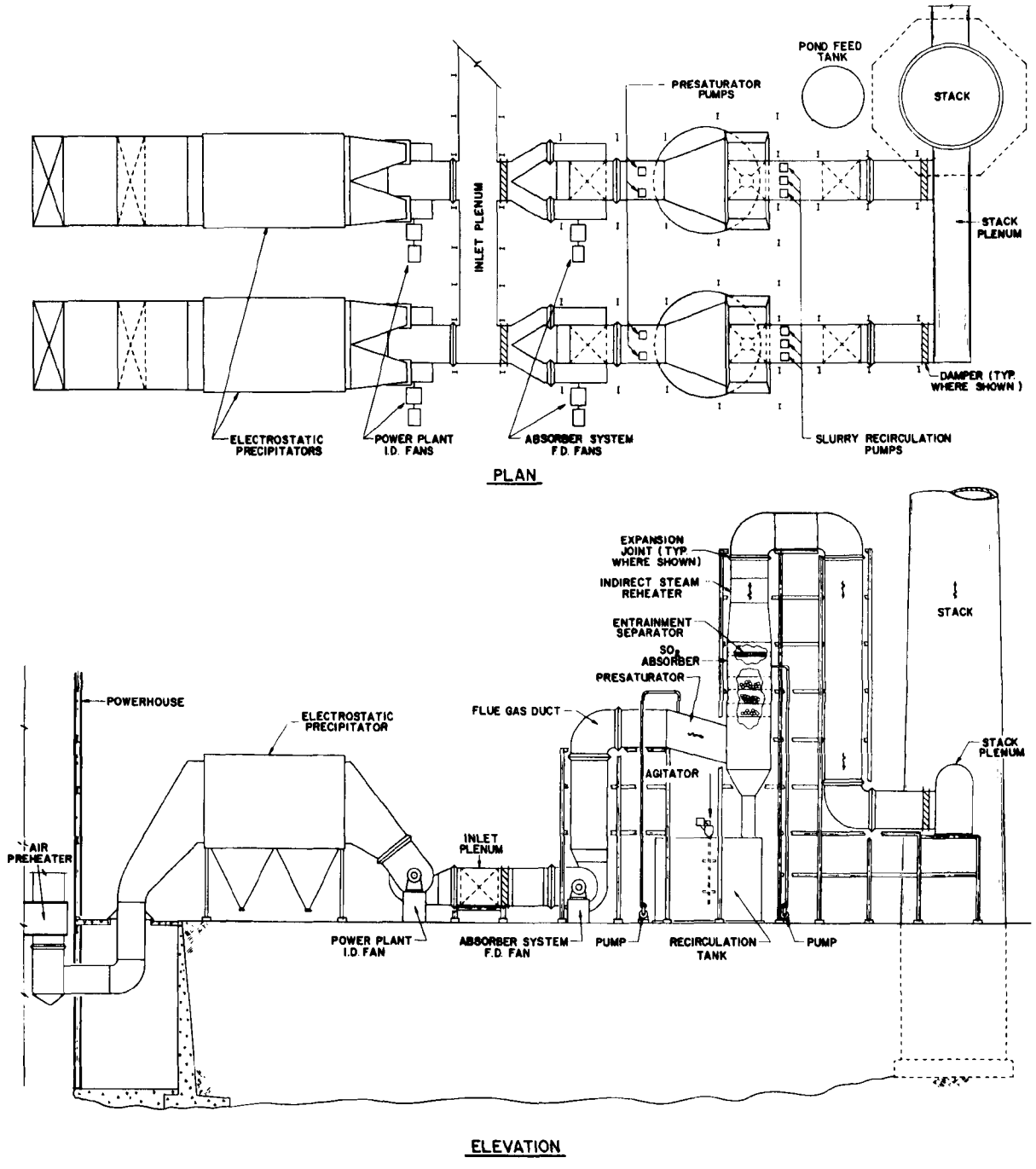

Figure 9. Lime slurry process. Mobile-bed scrubber system base-case plan and elevation.

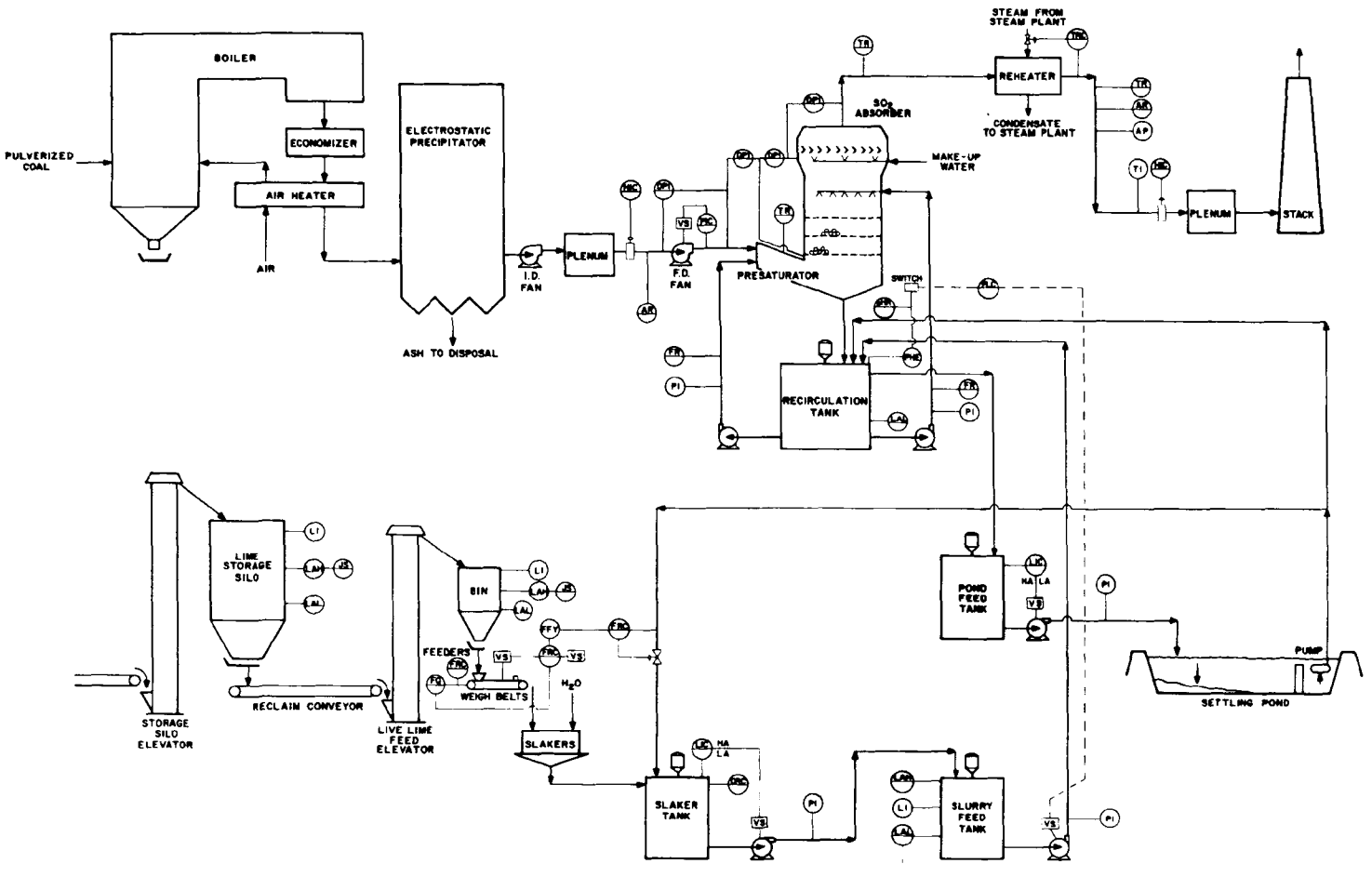

Figure 10. Lime slurry process. Base-case control diagram.

Flue gas is cooled to 127°F to 130°F in a presaturator with slurry from the scrubber system before entering the mobile-bed absorbers. A recirculating slurry of lime and reacted calcium salts flows through the absorbers countercurrently to the cooled flue gas to react with and remove the SO_2. The stoichiometry is 1.05 mols of CaO per mol of sulfur removed. The L/G ratio is 45 gallons per 10^3 actual ft^3. Absorber design and reheat provisions are the same as the limestone process.

A bleedstream from the recirculation tank, consisting of $CaSO_3 \cdot 1/2H_2O$ and $CaSO_4 \cdot 2H_2O$ with a small quantity of unreacted $Ca(OH)_2$, is pumped one mile to an earthen-diked, clay-lined pond where it settles to a sludge of about 40% solids. Pond supernate is returned to the slaker and recirculation tanks to maintain closed-loop operation.

Major Process Areas

The lime process is divided into the following areas:

1. Materials handling: This area contains equipment for receiving pebble lime, a lime storage silo, and in-process storage for supply to the slakers.

2. Feed preparation: Area equipment consists of two parallel slaking systems for producing a lime slurry of 15% solids.

3. Gas handling: This area contains an inlet plenum, four booster fans, and four ducts feeding the scrubbers.

4. SO_2 absorption: Four mobile-bed absorbers, each with presaturator, mist eliminator, recirculation tank, and pump are included.

5. Stack gas reheat: Equipment in this area consists of indirect steam reheaters and soot blowers for the coal-fired cases. The oil-fired unit is designed with one direct oil-fired reheater that discharges hot combustion gases directly into the duct on each of the four trains.

6. Solids disposal: Equipment in this area consists of an agitated pond feed tank, a pond feed pump, transport lines, and a pond return pump.

Tables 20 and 21 show the material balance and detailed equipment list by area for the base case.

Storage Capacities

Storage requirements for raw materials and surge capacities for in-process streams are listed below.

TABLE 20. LIME SLURRY PROCESS

MATERIAL BALANCE

	Stream No.	1	2	3	4	5
	Description	Coal to boiler	Combustion air to air heater	Combustion air to boiler	Gas to economizer	Gas to air heater
1	Total stream, lb/hr	428,600	4,546,200	4,101,800	4,516,100	4,516,000
2						
3						
4	sft^3/min (60°F)		1,005,000	906,700	958,000	958,000
5	Temperature, °F		80	535	890	890
6	Pressure, psig					
7	gpm					
8	Specific gravity					
9	pH					
10	Undissolved solids, %					

	Stream No.	6	7	8	9	10
	Description	Gas to electrostatic precipitator	Gas to presaturator	Gas to reheater	Gas to stack	Steam to reheater
1	Total stream, lb/hr	4,960,400	4,905,800	5,092,400	5,092,400	92,782
2						
3						
4	sft^3/min (60°F)	1,056,000	1,056,000	1,066,800	1,066,900	
5	Temperature, °F	300	300	127	175	470
6	Pressure, psig					500
7	gpm					
8	Specific gravity					
9	pH					
10	Undissolved solids, %					

	Stream No.	11	12	13	14	15
	Description	Recycle slurry for saturation	Makeup water to absorber	Recycle slurry to absorber	Overflow to pond feed tank	Slurry to pond
1	Total stream, lb/hr	2,651,800	244,279	29,832,300	306,400	306,400
2						
3						
4	sft^3/min (60°F)					
5	Temperature, °F					
6	Pressure, psig					
7	gpm	4,817	488	54,190	557	597
8	Specific gravity	1.1		1.1	1.1	1.1
9	pH	5.3		5.3	5.3	5.3
10	Undissolved solids, %	15		15	15	15

	Stream No.	16	17	18	19	20
	Description	Settled sludge	Pond water to slaker	Pond water to recirculation tank	Lime to weigh feeder	Makeup water to slaker
1	Total stream, lb/hr	114,400	120,400	77,115	19,625	40,288
2						
3						
4	sft^3/min (60°F)					
5	Temperature, °F					
6	Pressure, psig					
7	gpm	174	242	154		81
8	Specific gravity	1.32				
9	pH					
10	Undissolved solids, %	40				

(continued)

TABLE 20 (continued)

	Stream No.	21				
	Description	Lime slurry to recirculation tank				
1	Total stream, lb/hr	161,152				
2						
3						
4	sft^3/min (60^oF)					
5	Temperature, ^oF					
6	Pressure, psig					
7	gpm	293				
8	Specific gravity	1.1				
9	pH					
10	Undissolved solids, %	15				

1						
2						
3						
4						
5						
6						
7						
8						
9						
10						

1						
2						
3						
4						
5						
6						
7						
8						
9						
10						

1						
2						
3						
4						
5						
6						
7						
8						
9						
10						

TABLE 21. LIME SLURRY PROCESS

BASE-CASE EQUIPMENT LIST
DESCRIPTION AND COST

Area 1--Materials Handling

	Item	No.	Description	Total material cost, 1979 $
1.	Conveyor, lime unloading (enclosed)	1	Belt, 24 in. wide x 1500 ft long, 30 hp, 100 tons/hr, 200 ft/min	307,500
2.	Elevator, lime storage silo	1	Continuous, bucket 16 in. x 8 in. x 11-3/4 in., 75 hp, 130 ft lift, 100 tons/hr, 160 ft/min	35,400
3.	Silo, lime storage	1	47 ft dia x 69 ft straight side height, 3/8 in. carbon steel	81,000
4.	Feeder, reclaim	1	Vibrating pan, 16 in. wide x 60 in. long, 3-1/2 hp, 40 tons/hr	3,300
5.	Conveyor, live lime feed (enclosed)	1	Belt, 18 in. wide x 100 ft long, 2 hp, 40 tons/hr, 150 ft/min	19,500
6.	Elevator, live lime feed	1	Continuous, bucket 12 in. x 6 in. x 11-3/4 in., 40 hp, 50 ft lift, 40 tons/hr, 160 ft/min with diverter gate	18,900
7.	Bin, feed	2	11 ft dia x 15 ft straight side height, w/cover, carbon steel	7,700
8.	Dust collecting system	1	Polypropylene bag type, 2200 aft^3/min, 7-1/2 hp, (1/2 cost in material handling area)	3,100
	Subtotal			476,400

Area 2--Feed Preparation

	Item	No.	Description	Total material cost, 1979 $
1.	Feeder, lime bin discharge	2	Vibrating, 3-1/2 hp, carbon steel	6,600

(continued)

TABLE 21 (continued)

	Item	No.	Description	Total material cost, 1979 $
2.	Feeder, slaker	2	Screw, 12 in. dia x 12 ft long, 1 hp, 6 tons/hr	5,200
3.	Slaker	2	8 ft wide x 31 ft long, 5 hp, slaker, 2-1/2 hp classifier, 5 tons/hr	47,100
4.	Tank, slaker product	2	8 ft dia x 12 ft high, 4,512 gal, open top, four 8 in. baffles, agitator supports, carbon steel	7,400
	Lining		1/4 in. neoprene lining	3,500
5.	Agitator, slaker product tank	2	2 turbines, 32 in. dia, 5 hp, neoprene coated	18,100
6.	Dust collecting system	1	Polypropylene bag type, 2,200 aft^3/min, 7-1/2 hp (1/2 cost in material handling area)	3,000
7.	Pump, slaker product tank	3	Centrifugal, 131 gpm, 60 ft head, 5 hp, carbon steel, neoprene lined	8,000
8.	Tank, slurry feed	1	19 ft dia x 37 ft high, 172,500 gal, open top, four 39 in. baffles, agitator supports, carbon steel	17,500
	Lining		1/4 in. neoprene lining	18,600
9.	Agitator, slurry feed tank	1	2 turbines, 76 in. dia, 50 hp, neoprene coated	49,400
10.	Pump, slurry feed tank	6	Centrifugal, 65 gpm, 60 ft head, 2 hp, carbon steel, neoprene lined	10,100
	Subtotal			194,500

(continued)

TABLE 21 (continued)

Area 3--Gas Handling

Item	No.	Description	Total material cost, 1979 $
1. Fans	4	Forced draft, 13 in., 890 rpm, 1,250 hp, fluid drive, double inlet	812,000
Subtotal			812,000

Area 4--SO_2 Absorption

Item	No.	Description	Total material cost, 1979 $
1. SO_2 absorber	4	Mobile bed, 31 ft long x 14 ft wide x 40 ft high, 1/4 in. carbon steel, neoprene lining; 316 stainless steel grids, nitrile foam spheres, FRP spray headers, 316 stainless steel chevron vane entrainment separator	3,274,100
2. Tank, recirculation	4	31 ft dia x 23 ft high, 129,900 gal, open top, four 31 in. wide baffles, agitator supports, carbon steel	68,100
Lining		1/4 in. neoprene lining	68,700
3. Agitator, recirculation tank	4	12 in. dia, 50 hp, neoprene coated	191,800
4. Pump, presaturator	6	Centrifugal, 1,272 gpm, 105 ft head, 75 hp, carbon steel, neoprene lined	40,900
5. Pump, makeup water	2	Centrifugal, 1,066 gpm, 150 ft head, 75 hp, carbon steel	27,300
6. Pump, slurry recirculation	10	Centrifugal, 7,155 gpm, 105 ft head, 400 hp, carbon steel, neoprene lined	167,300

(continued)

TABLE 21 (continued)

Item	No.	Description	Total material cost, 1979 $
7. Soot blowers	40	Air, retractable	260,000
Subtotal			4,098,200

Area 5--Reheat

Item	No.	Description	Total material cost, 1979 $
1. Reheater	4	Steam, tube type, 3,600 ft^2, one-half of tubes made of Inconel 625 and one-half made of Cor-Ten	856,000
2. Soot blowers	20	Air, retractable	130,000
Subtotal			986,000

Area 6--Solids Disposal

Item	No.	Description	Total material cost, 1979 $
1. Tank, pond feed	1	17 ft dia x 23 ft high, 40,400 gal, open top, agitator supports, four 17 in. baffles, carbon steel	6,100
Lining		1/4 in. neoprene lining	5,800
2. Agitator, pond feed tank	1	2 turbines, 48 in. dia, 7-1/2 hp, neoprene coated	12,000
3. Pumps, pond feed	2	Centrifugal, 553 gpm, 100 ft head, 30 hp, carbon steel, neoprene lined	9,500
4. Pumps, pond return	2	Centrifugal, 393 gpm, 100 ft head, 20 hp, carbon steel	8,500
Subtotal			41,900

Lime storage silo - 14 days
Slurry feed tank - 8 hours
Recirculation tanks - 10 minutes (including drain down)
Pond feed tank - 1 hour

Solids Disposal

Waste solids disposal in the lime process is handled in the same manner as the limestone process.

Pond Construction--
Pond designs are the same as the limestone slurry process. Total pond depth for the base case is 18.9 feet and excavation depth is 3.1 feet. Pond areas for each case are listed in Table 22.

LIME PRODUCTION

The flow diagram and control diagram for production of lime from limestone are shown in Figures 11 and 12. The same lime production process is used in commercial lime manufacture although the commercial lime plants are generally designed for higher production rates than the consumption of a single power plant using lime scrubbing.

Lime is produced from limestone by thermal decomposition (calcination) in the following reaction.

$$CaCO_3 \xrightarrow{\text{heat}} CaO + CO_2\uparrow$$

Coal, oil, or natural gas may be used as the fuel for calcining. The process described uses coal. For the oil-fired case variation a more efficient oil-fired annular shaft kiln process is used. The annular shaft kiln cannot be used with coal, however.

For onsite production of lime from limestone the process area is located adjacent to the power plant. Limestone and coal are unloaded and conveyed to stockpiles. From these they are transferred by conveyor to the lime process feed bins. The coal is crushed in a hammer mill prior to pulverizing in an air-swept ball mill.

The coal dust formed in the ball mill is entrained in the air and blown to a classifier. The larger particles from the classifier are returned to the ball mill for further reduction. The air-swept fine coal dust from the classifier is blown by the ball mill exhaust fan into the combustion chamber of the limestone calciner.

TABLE 22. LIME SLURRY PROCESS ACREAGE REQUIRED FOR WASTE SOLIDS DISPOSAL

Case	Years remaining life	Acres
Coal-Fired Power Unit		
1.2 lb SO_2/MBtu heat input allowable emission; onsite solids disposal (ponding)		
200 MW E 3.5% sulfur	20	72
200 MW N 3.5% sulfur	30	123
500 MW E 3.5% sulfur	25	198
500 MW N 2.0% sulfur	30	136
• 500 MW N 3.5% sulfur	30	240
500 MW N 5.0% sulfur	30	353
1000 MW E 3.5% sulfur	25	346
1000 MW N 3.5% sulfur	30	430
90% SO_2 removal; onsite solids disposal (ponding)		
500 MW N 3.5% sulfur	30	277
Oil-Fired Power Unit		
0.8 lb SO_2/MBtu heat input allowable emission; onsite solids disposal (ponding)		
500 MW E 2.5% sulfur	25	96

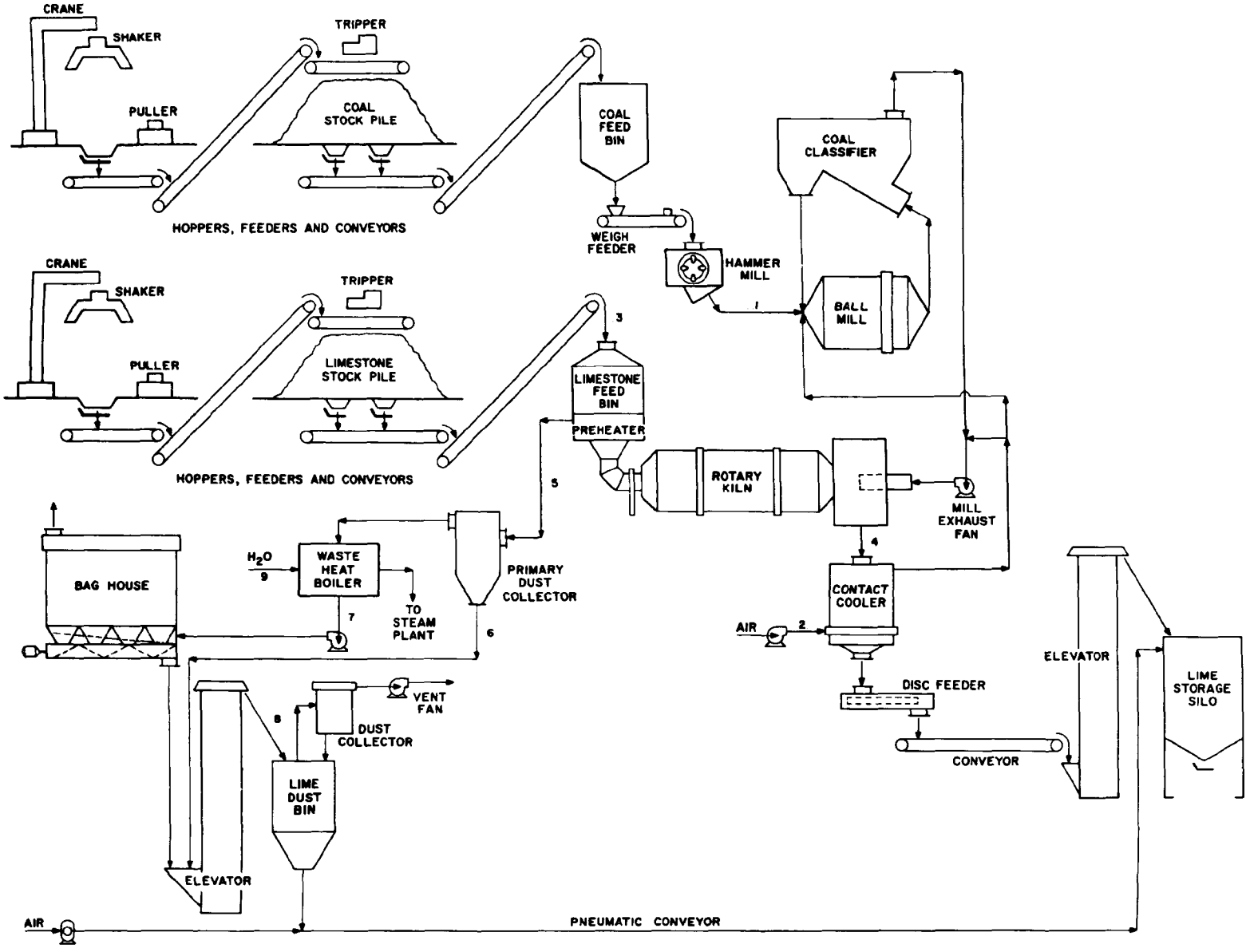

Figure 11. Lime from limestone. Base-case flow diagram.

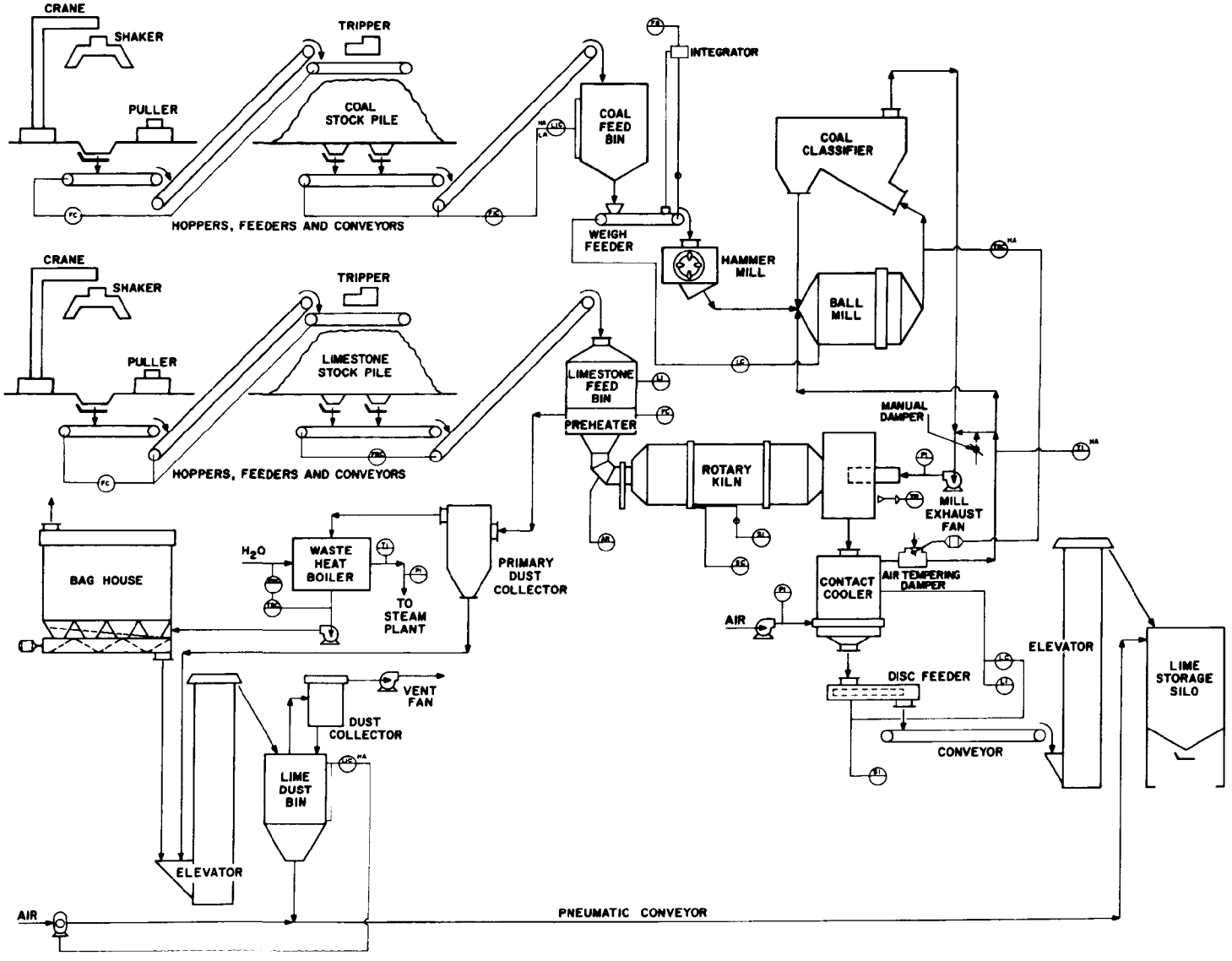

Figure 12. Lime from limestone. Base-case control diagram.

The limestone is fed through a preheater to a rotary kiln calciner operating in the temperature range of 2000°F-2400°F. The lime product is discharged from the calciner to a fluid-bed cooler and transferred to a storage silo as shown in Figure 13. Dust recovery equipment and a waste heat boiler are included in the calciner exhaust gas system. The base-case calcination process is designed for approximately 240 tons of lime production per day. The material balance for the base-case conditions is shown in Table 23.

The lime from limestone process consists of two major areas--materials handling and calcining. The equipment requirements and costs for these areas are described in Table 24.

Storage Capacities

Storage requirements for raw materials and allowance for in-process streams are listed below.

Raw materials
- Limestone storage - 30-day stockpile
- Coal storage - 30-day stockpile

In-process
- Coal feed bin - 24 hours
- Limestone feed bin - 12 hours
- Lime dust bin - 8 hours
- Lime storage silo - 14 days
- Feed bin - 8 hours

MAGNESIA PROCESS

The magnesia process scrubbing system is similar to the limestone and lime slurry processes. The process includes a chloride prescrubber not needed in the waste-producing processes, however. The more fundamental differences are in processing of the spent scrubbing slurry. The scrubber effluent is dried and calcined to produce magnesia for reuse and SO_2 which is processed to sulfuric acid.

The flow diagram for the magnesia process is shown in Figure 14. The control diagram, plot plan, and scrubber system design are shown in Figures 15, 16, and 17. Makeup and recycled MgO is pneumatically conveyed to 30-day storage silos. Vibrating screw feeders transfer makeup and recycled MgO from 8-hour capacity, in-process feed bins to the preslaker mixer where freshwater is added to wet the MgO thus allowing better mixing in the slaking tank. Residence time in the mixer is only about 2 minutes to prevent solidification of the concentrated mix. Using centrate from the centrifuges, slaking is completed in the slaking tank, which acts as a heat sink for the exothermic reaction, and the $Mg(OH)_2$ slurry of about 15% solids is pumped to the absorbers.

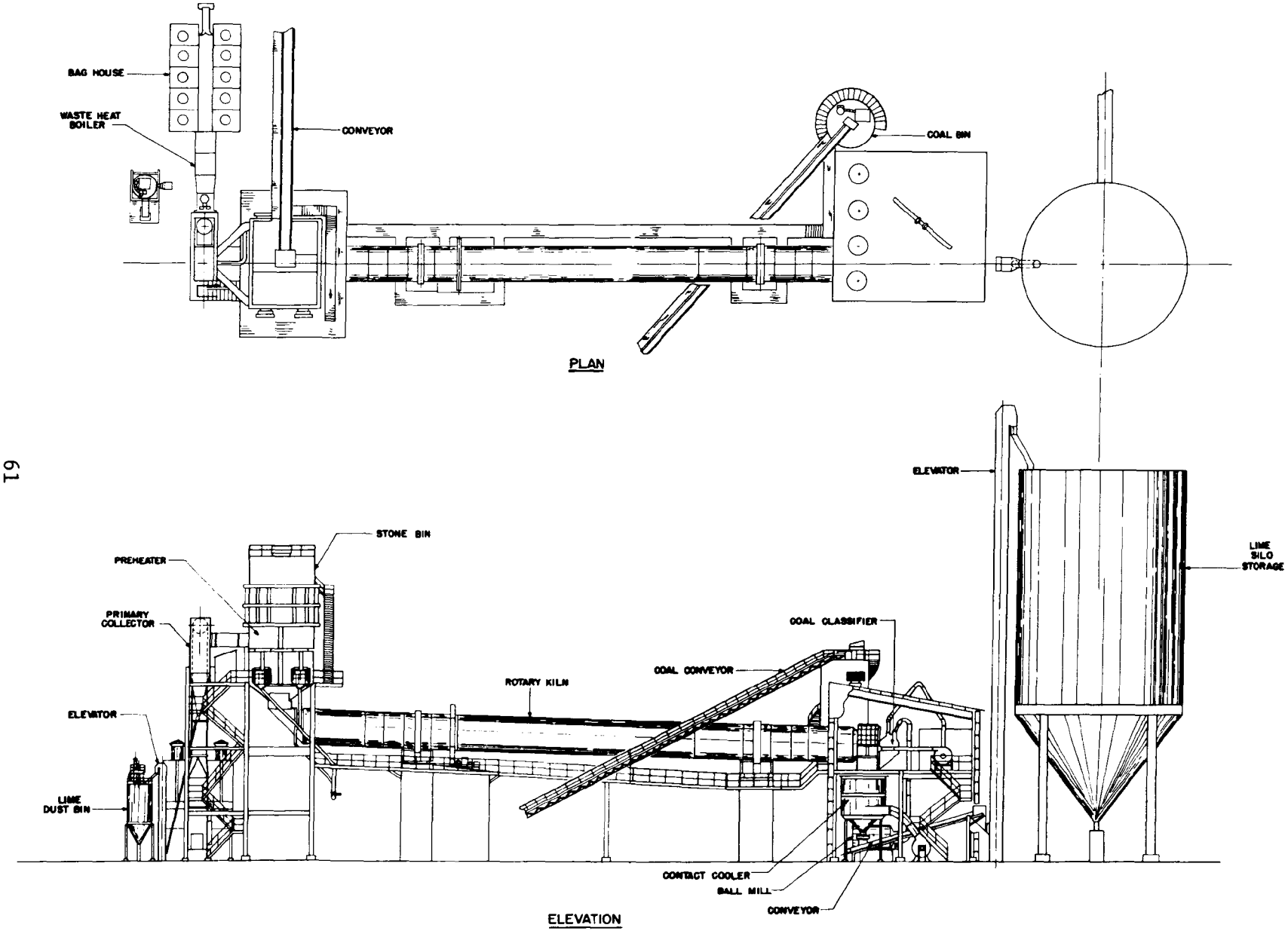

Figure 13. Lime from limestone. Base-case plan and elevation.

TABLE 23. LIME FROM LIMESTONE

MATERIAL BALANCE

	Stream No.	1	2	3	4	5
	Description	Coal to ball mill	Kiln combustion air	Limestone to feed bin	Lime to contact cooler	Kiln off-gas to dust collector
1	Total stream, lb/hr	5,607	49,081	36,973	18,520	54,829
2						
3						
4	sft^3/min (60°F)		10,800			10,700
5	Temperature, °F		80		1,900	550
6	Pressure, psig					
7	gpm					
8	Specific gravity					
9	pH					
10	Undissolved solids, %					

	Stream No.	6	7	8		
	Description	Mechanical collector lime dust to elevator	Kiln off-gas to baghouse	Lime dust to dust bin		
1	Total stream, lb/hr	1,646	53,101	2,139		
2						
3						
4	sft^3/min (60°F)		10,700			
5	Temperature, °F		300			
6	Pressure, psig					
7	gpm					
8	Specific gravity					
9	pH					
10	Undissolved solids, %					

1						
2						
3						
4						
5						
6						
7						
8						
9						
10						

1						
2						
3						
4						
5						
6						
7						
8						
9						
10						

TABLE 24 . LIME FROM LIMESTONE

BASE-CASE EQUIPMENT LIST
DESCRIPTION AND COST

Area 1--Materials Handling

	Item	No.	Description	Total material cost, 1979 $
1.	Car shaker, limestone	1	Top mounting with crane	19,900
2.	Car puller, limestone	1	25 hp with 5 hp return	46,300
3.	Hopper, limestone unloading	1	12 ft x 20 ft x 2 ft bottom, 20 ft deep, 2400 ft^3, carbon steel	5,400
4.	Feeder, limestone unloading	1	Vibrating pan, 42 in. wide x 60 in. long, 3 hp, 250 tons/hr	4,400
5.	Conveyor, limestone unloading	1	Belt, 36 in. wide x 10 ft long, 5 hp, 250 tons/hr, 130 ft/min	2,700
6.	Conveyor, limestone stocking (incline)	1	Belt, 36 in. wide x 200 ft long, 50 hp, 20° slope, 250 tons/hr, 130 ft/min	62,600
7.	Conveyor, limestone stocking	1	Belt, 36 in. wide x 200 ft long, 7-1/2 hp, 250 tons/hr, 130 ft/min	54,400
8.	Tripper	1	5 hp, 30 ft/min	21,200
9.	Mobile equipment	1	Dozer, 140 hp	55,300
10.	Hopper, limestone reclaim	2	7 ft x 7 ft, 4 ft deep, 60° slope, carbon steel	800
11.	Feeder, live limestone storage	2	Vibrating pan, 24 in. wide x 40 in. long, 1 hp, 12 tons/hr	6,500
12.	Pump, tunnel sump	2	Vertical, 60 gpm, 70 ft head, 5 hp, carbon steel, neoprene lined	3,900
13.	Conveyor, live limestone storage	1	Belt, 30 in. wide x 100 ft long, 2 hp, 100 tons/hr, 60 ft/min	22,800

(continued)

TABLE 24 (continued)

	Item	No.	Description	Total material cost, 1979 $
14.	Conveyor, live limestone feed (incline)	1	Belt, 30 in. wide x 305 ft long, 15 hp, 20° slope, 100 tons/hr, 60 ft/min	48,000
15.	Car shaker, coal	1	Top mounting with crane	19,900
16.	Car puller, coal	1	25 hp with 5 hp return	46,300
17.	Hopper, coal unloading	1	12 ft x 20 ft x 2 ft bottom, 20 ft deep, 2400 ft^3, carbon steel	5,400
18.	Feeder, coal unloading	1	Vibrating pan, 42 in. wide x 60 in. long, 3 hp, 250 tons/hr	4,400
19.	Conveyor, coal unloading	1	Belt, 36 in. wide x 10 ft long, 5 hp, 250 tons/hr, 130 ft/min	2,700
20.	Conveyor, coal stocking (incline)	1	Belt, 36 in. wide x 200 ft long, 25 hp, 20° slope, 250 tons/hr, 130 ft/min	87,000
21.	Conveyor, coal stocking	1	Belt, 36 in. wide x 40 ft long, 2 hp, 250 tons/hr, 130 ft/min	11,800
22.	Tripper	1	5 hp, 30 ft/min	21,200
23.	Hopper, coal reclaim	2	7 ft x 7 ft, 4 ft deep, 60° slope, carbon steel	800
24.	Feeder, coal reclaim	2	Vibrating pan, 24 in. wide x 40 in. long, 1 hp, 12 tons/hr	6,500
25.	Pump, tunnel sump	2	Vertical, 60 gpm, 70 ft head, 5 hp, carbon steel, neoprene lined	3,900
26.	Conveyor, coal feed	1	Belt, 14 in. wide x 90 ft long, 3 hp, 22 tons/hr, 100 ft/min	16,800
27.	Conveyor, coal feed (incline)	1	Belt, 14 in. wide x 190 ft long, 5 hp, 20° slope, 3 tons/hr 30 ft/min	28,600

(continued)

TABLE 24 (continued)

	Item	No.	Description	Total material cost, 1979 $
28.	Bin, coal feed	1	13 ft dia x 21 ft straight side height, w/cover, carbon steel	6,100
	Subtotal			637,600

Area 2--Limestone Calcination

	Item	No.	Description	Total material cost, 1979 $
1.	Feeder, coal	1	Weigh belt, 24 in. wide, 1 hp, 3 tons/hr	5,400
2.	Crusher, coal	1	Gyratory, 0 x 1 in., 5 hp, 3 tons/hr	10,000
3.	Ball mill, coal	1	Air swept, 7 ft dia x 8-1/2 ft long, 150 hp, 3 tons/hr	105,000
	Ball charge			7,000
4.	Hoist	1	Electric, 5 tons	7,900
5.	Classifier, coal	1	95% - 200 mesh, 3 tons/hr	7,500
6.	Fan, ball mill exhaust	1	Induced draft, 18 in., 50 hp	4,100
7.	Bin, limestone feed	1	24 ft x 18 ft x 11 ft straight side height, w/cover, carbon steel	70,000
8.	Preheater, limestone	1	KVS counterflow, refractory lined	225,700
9.	Rotary kiln	1	10 ft dia x 160 ft long, 100 hp, carbon steel	618,100
10.	Dust collector, primary	1	Cyclone, 19,800 aft^3/min	25,000
11.	Fan, dust collection	1	Induced draft, 30 in., 150 hp	7,800

(continued)

TABLE 24 (continued)

	Item	No.	Description	Total material cost, 1979 $
12.	Waste heat boiler	1	Tube type, 882 ft^2, 316L stainless steel	23,700
13.	Baghouse	1	Fiberglass bag type, 15,600 aft^3/min	200,000
14.	Closed loop, water system	1	Bearing oil cooling system	12,000
15.	Elevator, lime dust	1	Centrifugal bucket, 5 in. x 3-1/2 in. x 6 in., 1/2 hp, 28 ft lift, 1 ton/hr, 150 ft/min	4,300
16.	Bin, lime dust	1	7 ft dia x 11 ft straight side height, w/cover, carbon steel	2,300
17.	Dust collector	1	Bag filter, 1,100 aft^3/min	5,500
18.	Conveyor, lime dust	1	Pneumatic, pressure, 10 hp	43,000
19.	Fan, cooler	1	Forced draft, 20 in., 75 hp	2,900
20.	Cooler, lime	1	12 ft dia, KVS contact cooler, carbon steel	55,300
21.	Feeder, lime cooler discharge	1	Disc, 36 in., 1/2 hp, 9 tons/hr, carbon steel	12,000
22.	Conveyor, lime storage (incline)	1	Belt, 14 in. wide x 35 ft long, 1 hp, 15° slope, 10 tons/hr, 100 ft/min	8,900
23.	Elevator, storage silo	1	Continuous, bucket 12 in. x 6 in. x 11-3/4 in., 75 hp, 130 ft lift, 100 tons/hr, 160 ft/min	28,400
24.	Silo, lime storage	1	47 ft dia x 69 ft straight side height, 3/8 in. carbon steel	81,000
25.	Feeder, reclaim	1	Vibrating pan, 16 in. wide x 60 in. long, 3-1/2 hp, 40 tons/hr	3,300
26.	Conveyor, live lime feed (enclosed)	1	Belt, 18 in. wide x 100 ft long, 2 hp, 40 tons/hr, 150 ft/min	19,500

(continued)

TABLE 24 (continued)

	Item	No.	Description	Total material cost, 1979 $
27.	Elevator, live lime feed	1	Continuous, bucket 12 in. x 6 in. x 11-3/4 in., 40 hp, 50 ft lift, 40 tons/hr, 160 ft/min, with diverter gate	18,900
28.	Bin, feed	2	11 ft dia x 15 ft straight side height, w/cover, carbon steel	7,700
29.	Dust collecting system	1	Polypropylene bag type, 2,200 aft^3/min, 7-1/2 hp (1/2 cost in feed preparation	3,100
	Subtotal			1,625,300

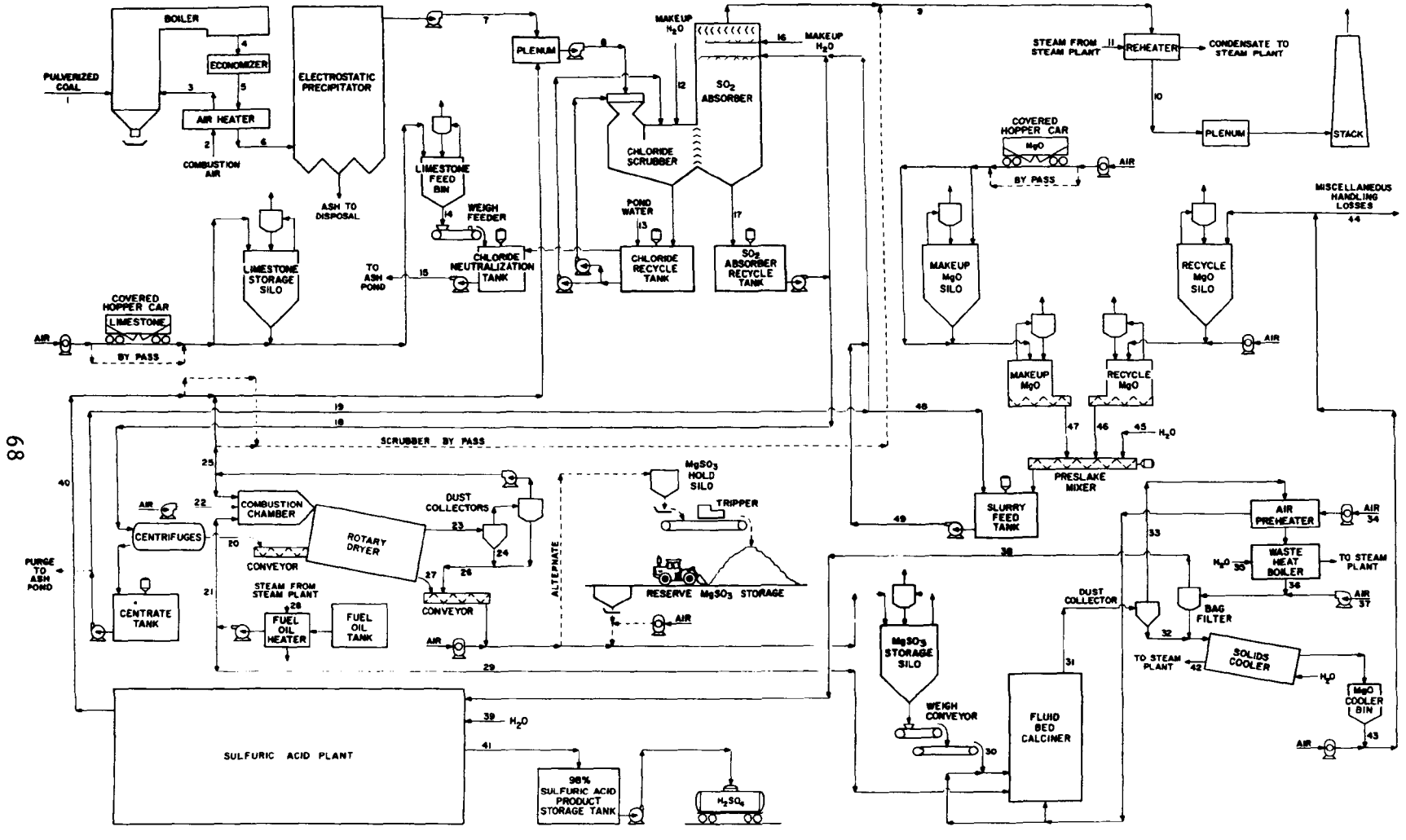

Figure 14. Magnesia process. Base-case flow diagram.

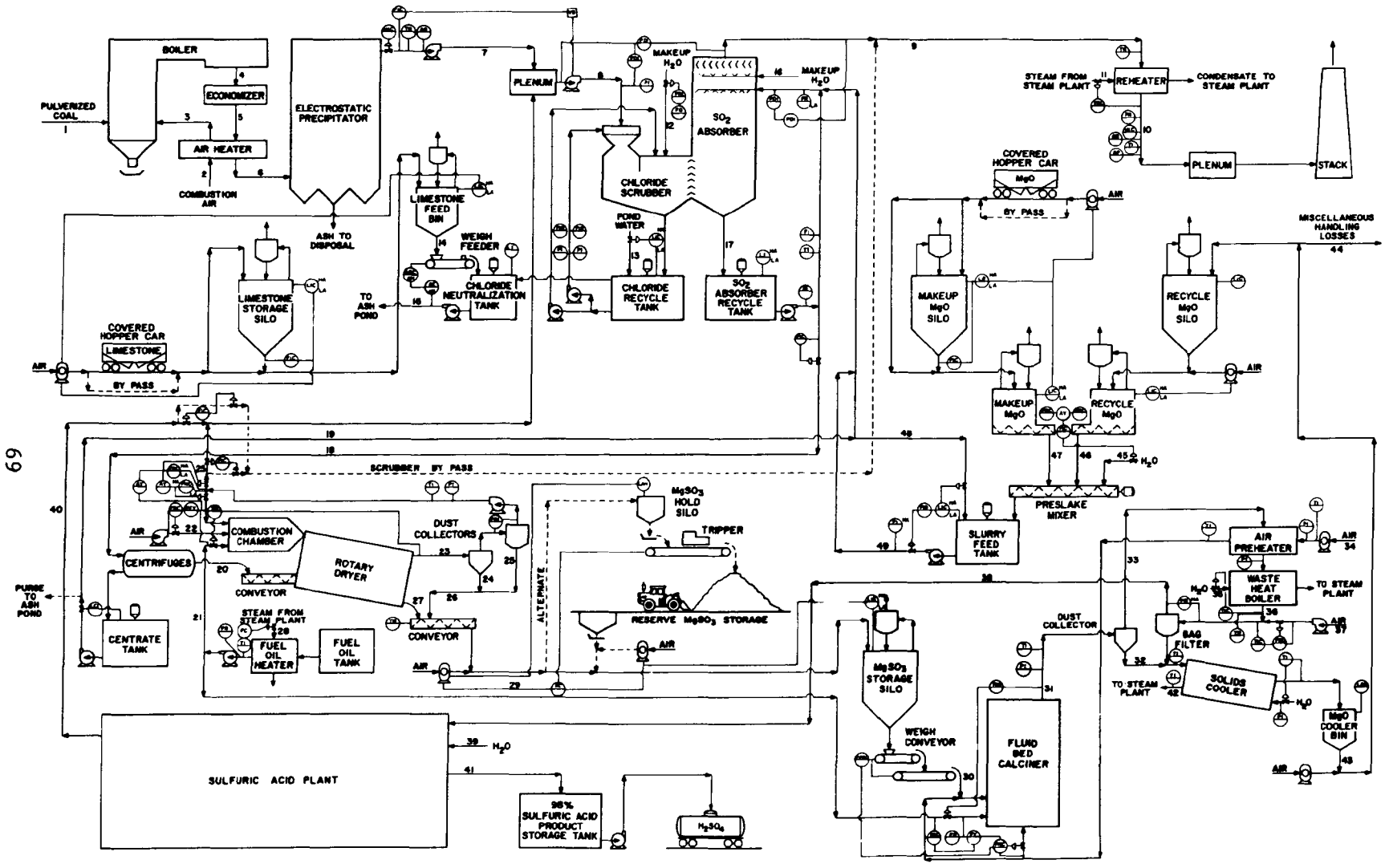

Figure 15. Magnesia process. Base-case control diagram.

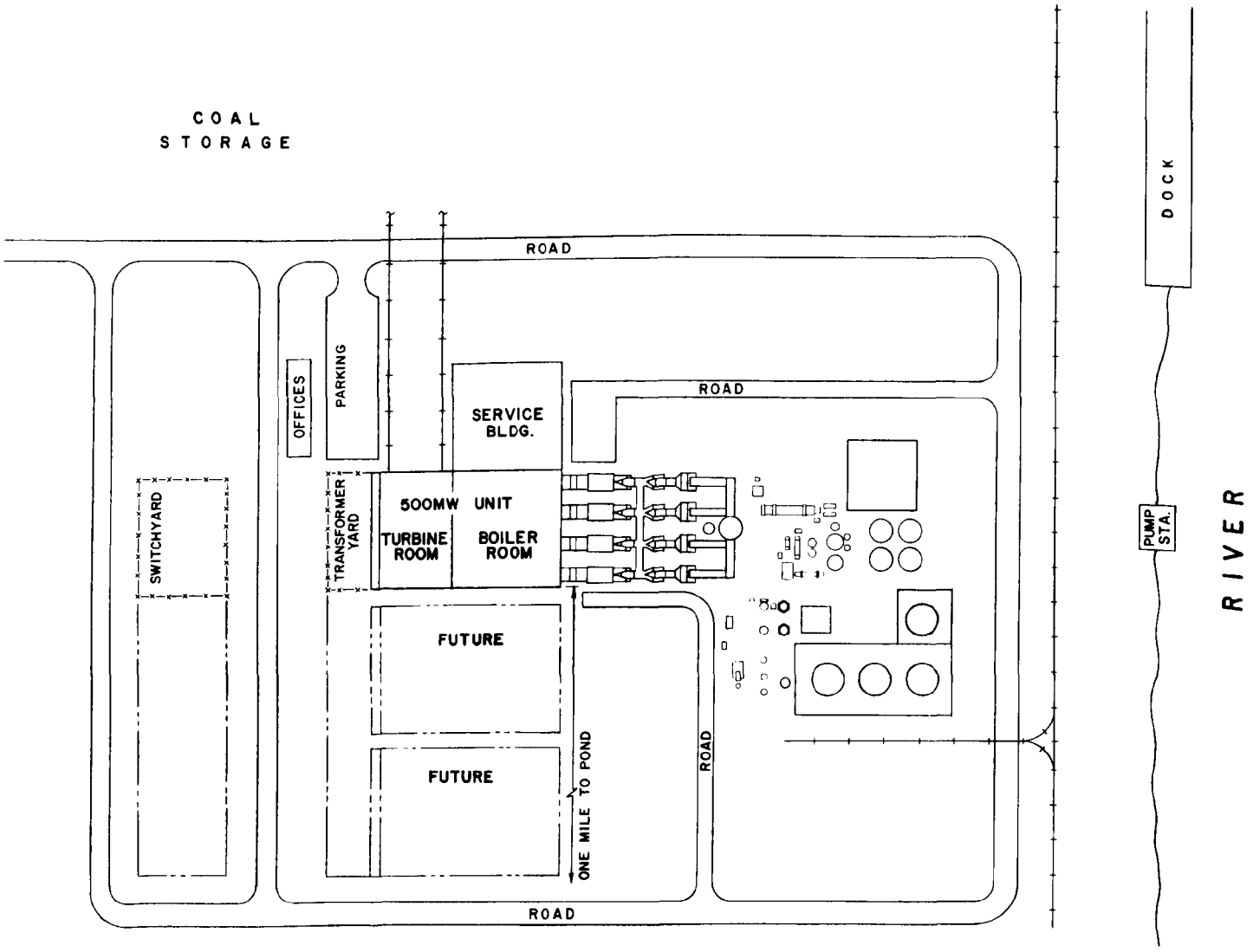

Figure 16. Magnesia process. Base-case overall plot plan.

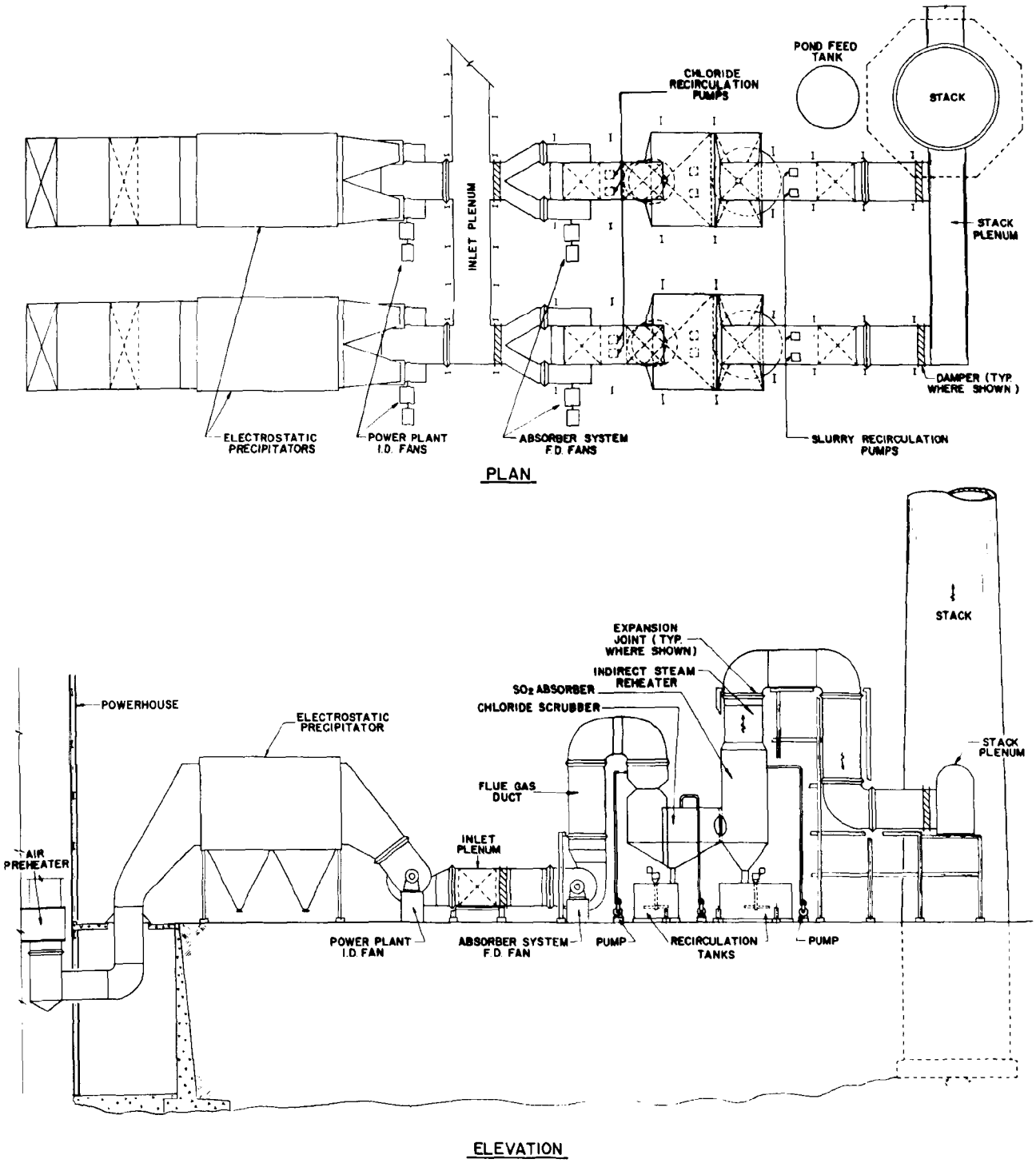

Figure 17. Spray grid tower absorber system. Base-case plan and elevation.

Duct arrangement for this process is the same as for the limestone process. Four trains supplied by the common plenum, each with a booster fan, are used. Flue gas is cooled and humidified and approximately 70% of the chloride is removed in a venturi scrubber using recycle liquor of a pH of about 1. The chloride remaining in the flue gas is removed in a spray chamber with three banks of nozzles spraying perpendicularly to the gas flow. Recycle liquor is sprayed from the first two banks of nozzles and fresh makeup water is used in the third bank. From the chloride recycle tank, a bleedstream of chloride-rich liquor overflows to a neutralizing tank to which agricultural limestone is added. The neutralized stream is pumped to the ash pond. A mist eliminator, placed between the spray chamber and the SO_2 absorber, prevents carryover of chlorides in entrained water.

The SO_2 absorber is a spray grid tower designed with a chevron entrainment separator to prevent slurry and water entrainment in the cleaned gas stream. $Mg(OH)_2$ slurry is circulated countercurrently to the gas flow and reacts with the SO_2 in the flue gas to form magnesium-sulfur salts, predominately $MgSO_3$. Makeup slurry is added to the circulation loop. The absorber effluent is collected in a recirculation tank from which a bleedstream is pumped to the regeneration area.

The regeneration area is shown in Figures 18 and 19. Two parallel centrifuges receive the 15% solids slurry effluent and concentrate about 90% of the solids to an 85% solids cake. Centrate from the centrifuges is gravity fed to the centrate tank and is returned to the absorber and feed preparation areas as needed. Cake from the centrifuges is dried in a cocurrent oil-fired rotary dryer (Figure 19). A portion of the dryer off-gas is recycled to the dryer combustion chamber for temperature control and the remainder is returned to the plenum ahead of the absorber to be scrubbed along with the flue gas. The solids discharged from the dryer are transferred to storage.

The solids are calcined in a fluid-bed reactor at about $1600^{\circ}F$. No. 2 fuel oil is used as the fuel. Reactor off-gas, containing MgO and SO_2, flows through a cyclone separator which collects about 80% of the MgO. The remaining solids are removed in a bag filter. The MgO collected from the cyclones and bag filter is cooled in a rotary-tube solids cooler and is pneumatically conveyed to the storage silos.

Cleaned reactor off-gas is cooled in a combustion air preheater and a waste heat boiler. After the addition of air, the gas is fed to a single contact acid unit (Figures 20 and 21) which produces 98% sulfuric acid. A 30-day acid storage capacity is provided. Tail gas from the acid plant is returned to the SO_2 absorber. A material balance for the base-case magnesia process is shown in Table 25.

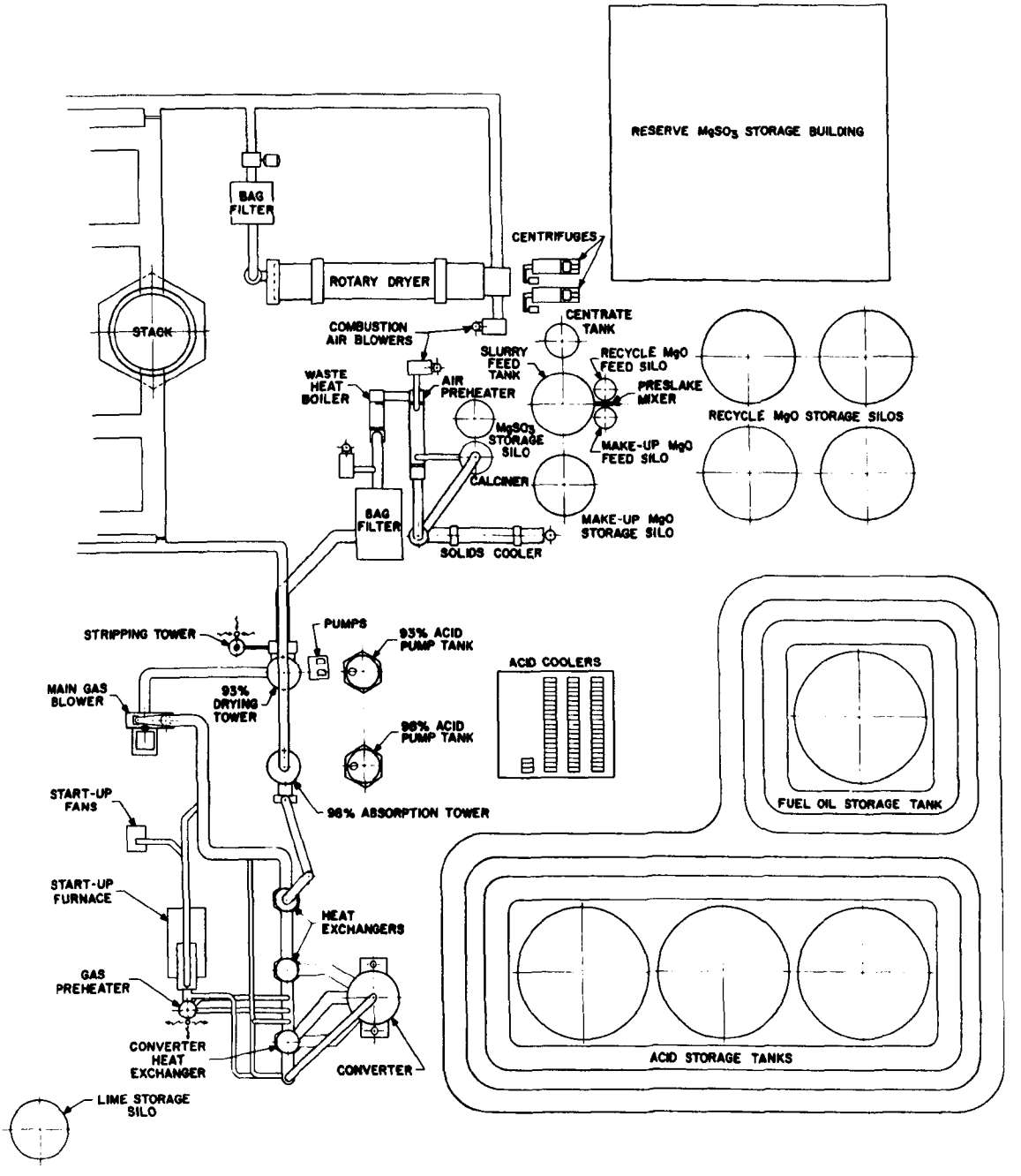

Figure 18. Magnesia process. Base-case plot plan - regeneration and acid production area.

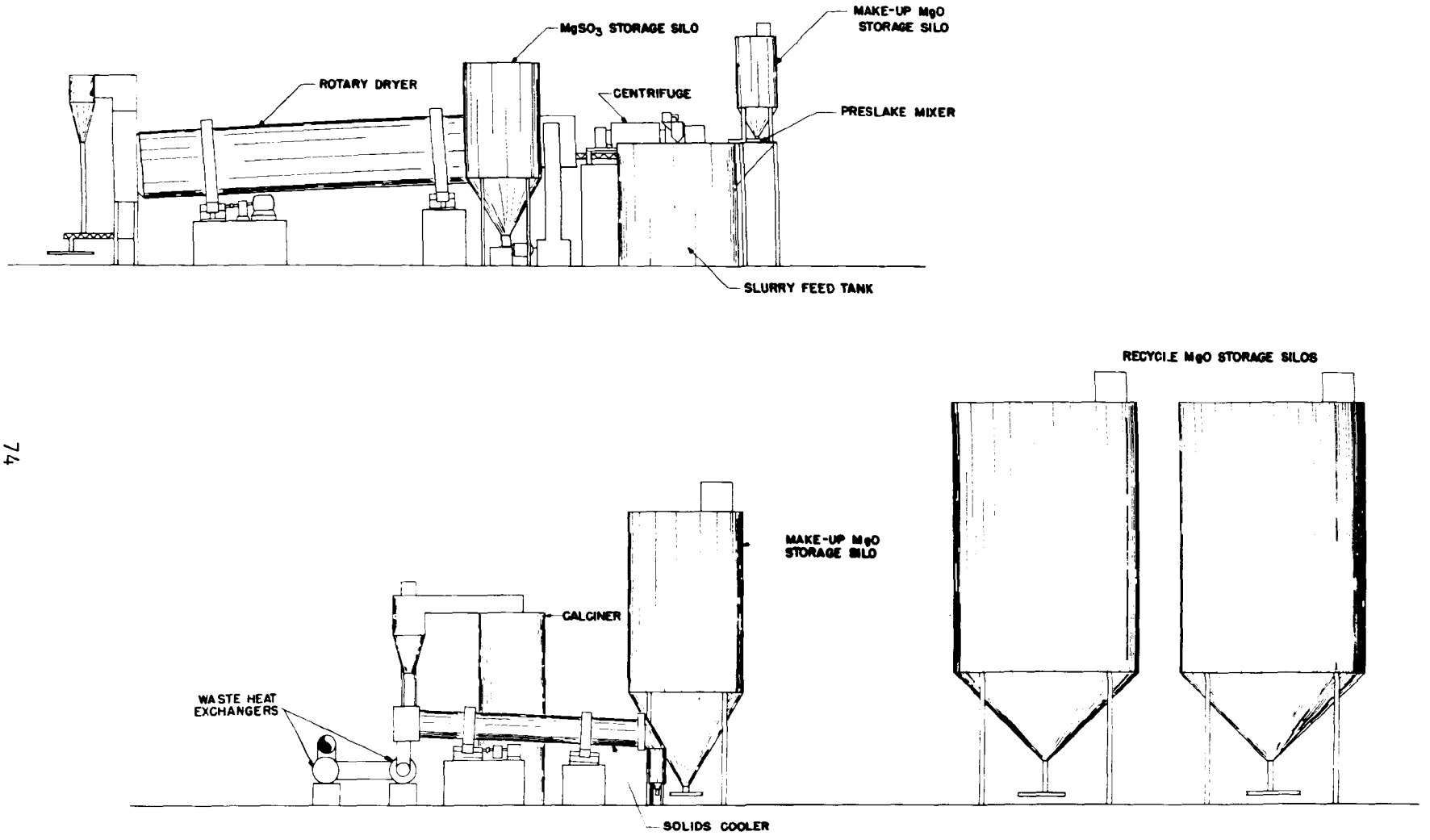

Figure 19. Magnesia process. Regeneration area elevation.

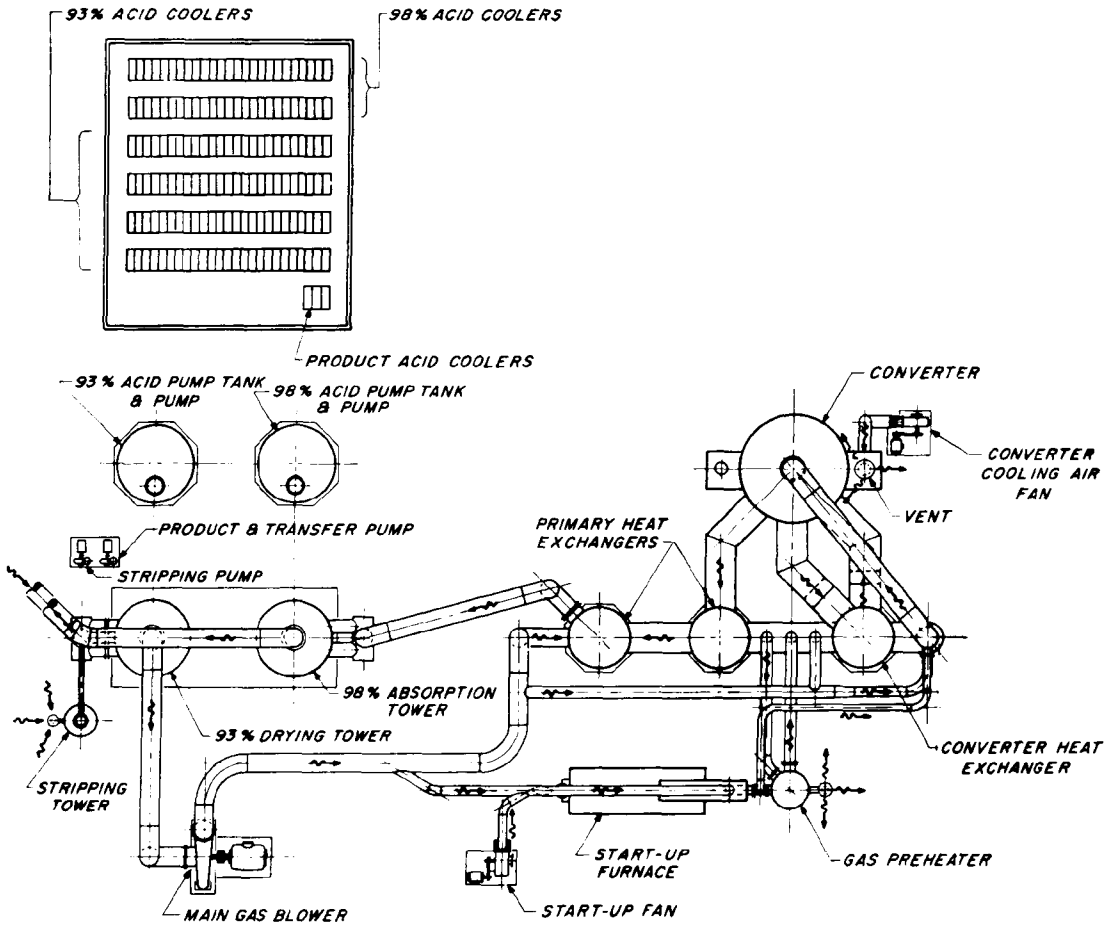

Figure 20. Magnesia process. Base-case acid plant plan.

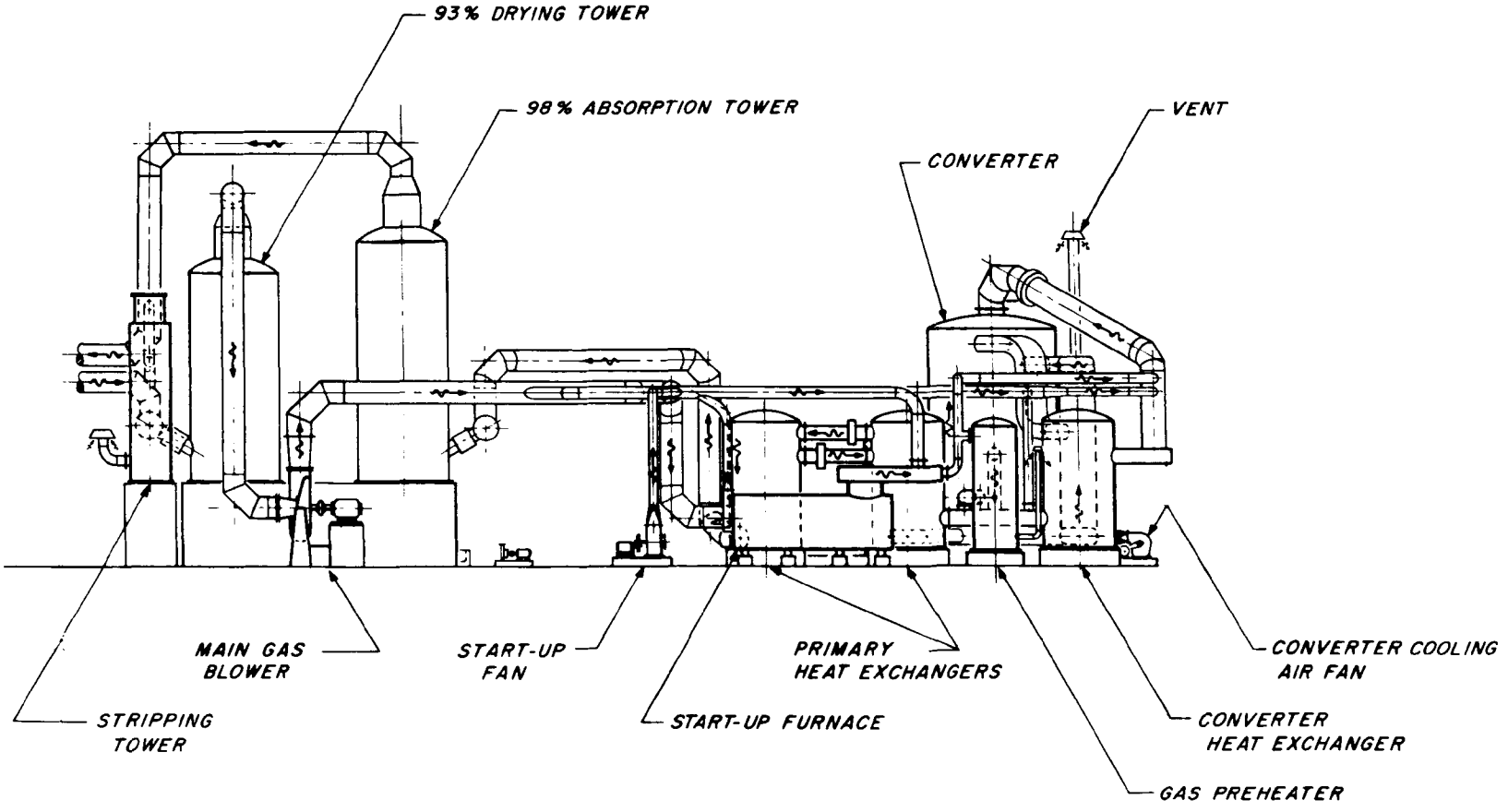

Figure 21. Magnesia process. Base-case acid plant elevation.

TABLE 25. MAGNESIA SLURRY - REGENERATION PROCESS

MATERIAL BALANCE

	Stream No.	1	2	3	4	5
	Description	Coal to boiler	Combustion air to air heater	Combustion air to boiler	Gas to economizer	Gas to air heater
1	Total stream, lb/hr	428,600	4,546,200	4,101,800	4,516,700	4,516,700
2						
3						
4	sft^3/min (60°F)		1,005,000	906,700	958,000	958,000
5	Temperature, °F		80	535	890	890
6	Pressure, psig					
7	gpm					
8	Specific gravity					
9	pH					
10	Undissolved solids, %					

	Stream No.	6	7	8	9	10
	Description	Gas to electrostatic precipitator	Boiler flue gas	Combined gas to SO_2 absorber	Gas to reheater	Gas to plenum
1	Total stream, lb/hr	4,960,400	4,906,500	5,099,400	5,249,800	5,249,800
2						
3						
4	sft^3/min (60°F)	1,056,000	1,085,300	1,076,000	1,107,700	1,107,700
5	Temperature, °F	300	300		127	175
6	Pressure, psig					
7	gpm					
8	Specific gravity					
9	pH					
10	Undissolved solids, %					

	Stream No.	11	12	13	14	15
	Description	Steam to reheater	Makeup water to chloride scrubber	Pond water to chloride recycle tank	Limestone to chloride neutralization	Slurry to ash pond
1	Total stream, lb/hr	96,650	194,000	158,700	926	182,000
2						
3						
4	sft^3/min (60°F)					
5	Temperature, °F	470				
6	Pressure, psig	500				
7	gpm		388	317		362
8	Specific gravity			1.0		1.0
9	pH					
10	Undissolved solids, %					0.1

	Stream No.	16	17	18	19	20
	Description	Makeup water to SO_2 absorber	SO_2 absorber effluent	Slurry to centrifuge	Centrate to recycle	Feed to dryer
1	Total stream, lb/hr	29,278	7,137,800	497,100	418,100	78,595
2						
3						
4	sft^3/min (60°F)					
5	Temperature, °F					
6	Pressure, psig					
7	gpm	59	12,966	903	835	
8	Specific gravity		1.1	1.1	1.0	1.6
9	pH					
10	Undissolved solids, %		15	15	2	85

(continued)

TABLE 25 (continued)

	Stream No.	21	22	23	24	25
	Description	Fuel oil to dryer	Combustion air to dryer	Dryer gas to cyclone	Cyclone dust to conveyor	Dryer off-gas to SO_2 absorber
1	Total stream, lb/hr	4,787	99,092	227,600	4,469	147,400
2						
3						
4	sft^3/min (60°F)		21,300	48,000		31,100
5	Temperature, °F		80	400		400
6	Pressure, psig					
7	gpm	11				
8	Specific gravity	0.91				
9	pH					
10	Undissolved solids, %					

	Stream No.	26	27	28	29	30
	Description	Entrained dust to conveyor	Dryer product to conveyor	Steam to fuel oil heater	Fuel oil to calciner	$MgSO_3$ to calciner
1	Total stream, lb/hr	5,257	29,787	738	2,028	35,044
2						
3						
4	sft^3/min (60°F)					
5	Temperature, °F		250	358		
6	Pressure, psig			150		
7	gpm				4	
8	Specific gravity				0.91	
9	pH					
10	Undissolved solids, %					

	Stream No.	31	32	33	34	35
	Description	Calciner off-gas	Cyclone MgO to solids	Calciner gas to combustion air preheat	Combustion air to air preheater	Water to waste heat boiler
1	Total stream, lb/hr	66,418	11,184	55,234	29,385	6,371
2						
3						
4	sft^3/min (60°F)	11,000		11,000	6,200	
5	Temperature, °F	1,600	1,600	1,600	80	80
6	Pressure, psig					
7	gpm					13
8	Specific gravity					1.0
9	pH					
10	Undissolved solids, %					

	Stream No.	36	37	38	39	40
	Description	Calciner gas to bag filter	Quench air to calciner gas	Gas to acid plant	Cooling water to acid plant	Acid plant off-gas
1	Total stream, lb/hr	55,234	67,628	120,100	2,564,500	84,432
2						
3						
4	sft^3/min (60°F)	11,000	14,300	25,300		17,800
5	Temperature, °F	706	80	400		160
6	Pressure, psig					
7	gpm				5,125	
8	Specific gravity					
9	pH					
10	Undissolved solids, %					

(continued)

TABLE 25 (continued)

	Stream No.	41	42	43	44	45
	Description	98% sulfuric acid to storage tank	Water to solids cooler	Recycle MgO to conveyor	Miscellaneous handling losses	Water to preslake mixer
1	Total stream, lb/hr	31,500	8,018	13,980	419	8,616
2						
3						
4	sft^3/min (60°F)					
5	Temperature, °F	100	80	200		
6	Pressure, psig					80
7	gpm	34	16			
8	Specific gravity	1.84	1.0			17
9	pH					1.0
10	Undissolved solids, %					

	Stream No.	46	47	48	49	
	Description	Recycle MgO to preslake mixer	Makeup MgO to preslake mixer	Centrate to slaking tank	$Mg(OH)_2$ slurry to SO_2 absorber	
1	Total stream, lb/hr	13,561	419	120,300	142,900	
2						
3						
4	sft^3/min (60°F)					
5	Temperature, °F					
6	Pressure, psig					
7	gpm			240	260	
8	Specific gravity			1.0	1.1	
9	pH					
10	Undissolved solids, %			2	15	

1						
2						
3						
4						
5						
6						
7						
8						
9						
10						

1						
2						
3						
4						
5						
6						
7						
8						
9						
10						

Major Process Areas

The magnesia process is divided into the following operating areas.

1. Materials handling: This area consists of unloading conveyors, storage silos, transfer conveyors, and feed bins for makeup MgO and agricultural limestone.

2. Feed preparation: The equipment in this area consists of a preslaker mixer, slurry feed tank, and an MgO slurry pump.

3. Gas handling: Fan location and duct configuration are the same as those of the limestone slurry process.

4. SO_2 absorption: This area includes four spray grid tower absorbers, recirculation tanks, and pumps.

5. Stack gas reheat: The equipment in this area consists of four indirect steam reheaters and associated soot blowers for all coal-fired cases. Oil-fired units have one direct-oil-fired reheater per duct which discharges hot combustion gases directly into the duct.

6. Chloride purge: This area includes four chloride prescrubbers, recirculation tanks, associated pumps, and a neutralization tank, and a limestone feeder.

7. Slurry processing: In this area are two centrifuges and a centrate tank and pumps.

8. Drying: This area includes a rotary dryer, conveyors, an $MgSO_3$ storage building and silo, and a fuel storage tank.

9. Calcining: This area includes a fluid-bed calciner, heat transfer equipment, and an MgO cooler and conveyor.

10. Acid production: This area consists of a battery limits single-contact sulfuric acid unit.

11. Acid storage: This area consists of three storage acid tanks and discharge pumps.

A description of the equipment items in each area is given in Table 26.

TABLE 26. MAGNESIA SLURRY-REGENERATION PROCESS

BASE-CASE EQUIPMENT LIST
DESCRIPTION AND COST

Area 1--Materials Handling

	Item	No.	Description	Total material cost, 1979 $
1.	Conveyor, makeup Mgo	1	Pneumatic, pressure, 100 hp	80,000
2.	Silo, makeup Mgo storage	1	26 ft dia x 41 ft straight side height, w/cover, carbon steel	23,400
3.	Bin, makeup MgO feed	1	9 ft dia x 15 ft straight side height, w/cover, carbon steel	3,100
4.	Feeder, makeup MgO	1	Vibrating screw, 8 in. dia x 43 in. long, 1 hp, 900 ft^3/hr, 419 lb/hr	5,500
5.	Conveyor, recycle MgO feed	1	Pneumatic, pressure, 10 hp	43,000
6.	Bin, recycle MgO feed	1	9 ft dia x 15 ft straight side height, w/cover, carbon steel	3,100
7.	Feeder, recycle MgO	1	Vibrating screw, 8 in. dia x 43 in. long, 1 hp, 900 ft^3/hr, 7 tons/hr	5,500
8.	Car shaker	1	Top mounting with crane	19,900
9.	Conveyor, limestone	1	Pneumatic, pressure, 75 hp	102,900
10.	Silo, limestone storage	1	19 ft dia x 29 ft straight side height, w/cover, carbon steel	13,000
11.	Feeder, limestone storage silo discharge	1	Rotary stargate, 1 hp	1,300
12.	Bin, limestone feed	1	6 ft dia x 9 ft straight side height, w/cover, carbon steel	1,200
	Subtotal			301,900

(continued)

TABLE 26 (continued)

Area 2--Feed Preparation

	Item	No.	Description	Total material cost, 1979 $
1.	Preslaker mixer	1	Blade, 12 in. dia x 8 ft long, 5 hp	5,800
2.	Tank, slurry feed	1	27 ft dia x 27 ft high, 115,600 gal, open top, four 27 in. baffles, agitator supports, carbon steel	14,900
	Lining		1/4 in. neoprene lining	16,600
3.	Agitator, slurry feed tank	1	108 in. dia, 30 hp, neoprene coated	33,100
4.	Pump, MgO slurry feed tank	2	Centrifugal, 271 gpm, 150 ft head, 25 hp, carbon steel, neoprene coated	11,600
	Subtotal			82,000

Area 3--Gas Handling

	Item	No.	Description	Total material cost, 1979 $
1.	Fans	4	Forced draft, 15 in., 890 rpm, 1,500 hp, fluid drive, double width, double inlet	840,000
	Subtotal			840,000

Area 4--SO_2 Absorption

	Item	No.	Description	Total material cost, 1979 $
1.	SO_2 absorber	4	Spray grid tower, 29 ft long x 15 ft wide x 38 ft high, 1/4 in. carbon steel, neoprene lining; FRP spray headers, 316 stainless steel chevron vane entrainment separator	3,274,100

(continued)

TABLE 26 (continued)

	Item	No.	Description	Total material cost, 1979 $
2.	Tank, SO_2 absorber, recirculation	4	23 ft dia x 11-1/2 ft high, 35,700 gal, open top, four 23 in. baffles, agitator supports, carbon steel	27,100
	Lining		1/4 in. neoprene lining	28,200
3.	Agitator, SO_2 absorber recirculation tank	4	92 in. dia, 15 hp, neoprene coated	80,800
4.	Pump, SO_2 absorber recycle	8	Centrifugal, 3,230 gpm, 100 ft head, 200 hp, carbon steel, neoprene lined	99,700
5.	Pump, makeup water	4	Centrifugal, 926 gpm, 150 ft head, 75 hp, carbon steel	67,200
6.	Soot blowers	20	Air, retractable	130,000
	Subtotal			3,707,100

Area 5--Reheat

	Item	No.	Description	Total material cost, 1979 $
1.	Reheater	4	Steam, tube type, 3,754 ft^2, one-half of tubes made of Inconel 625 and one-half made of Cor-Ten	858,000
2.	Soot blowers	20	Air, retractable	130,000
	Subtotal			988,000

(continued)

TABLE 26 (continued)

Area 6--Chloride Purge

	Item	No.	Description	Total material cost, 1979 $
1.	Chloride scrubber	4	Combination venturi-spray chamber, venturi - 13 ft dia x 25 ft high, spray chamber - 20 ft long x 29 ft wide x 9 ft high, Hastelloy G spray headers chevron vane entrainment separators	1,834,200
2.	Tank, chloride recycle	4	14 ft dia x 11 ft high, 12,700 gal, open top, four 14 in. baffles, agitator supports, carbon steel	29,300
	Lining		1/4 in. neoprene lining	14,800
3.	Agitator, chloride recycle tank	4	56 in. dia, 5 hp, neoprene coated	36,100
4.	Pumps, chloride recycle (venturi)	8	Centrifugal, 60 ft head, 100 hp, carbon steel, neoprene lined	118,200
5.	Pumps, chloride recycle (spray chamber)	8	Centrifugal, 150 ft head, 250 hp, carbon steel, neoprene lined	212,600
6.	Feeder, lime feed bin discharge	1	Weigh feeder, 3/4 hp, 722 lb/hr	5,300
7.	Tank, chloride neutralization	1	13 ft dia x 11 ft high, 10,900 gal, open top, four 13 in. baffles, carbon steel	5,900
	Lining		1/4 in. neoprene lined	4,000
8.	Agitator, chloride neutralization tank	1	64 in. dia, 7-1/2 hp, neoprene coated	12,000
9.	Pump, chloride purge	2	Centrifugal, 362 gpm, 200 ft head, 40 hp, carbon steel, neoprene lined	21,100
10.	Pump, pond water return	2	Centrifugal, 317 gpm, 150 ft head, 25 hp, carbon steel, neoprene lined	18,200
	Subtotal			2,311,700

(continued)

TABLE 26 (continued)

Area 7--Slurry Processing

	Item	No.	Description	Total material cost, 1979 $
1.	Centrifuge	2	40 in. dia x 140 in. long, solid bowl, stainless steel, 300 hp	654,000
2.	Tank, centrate	1	14 ft dia x 7 ft high, 8,100 gal, open top, four 14 in. baffles, agitator supports, carbon steel	2,400
	Lining		1/4 in. neoprene lined	2,300
3.	Agitator, centrate tank	1	56 in. dia, 2 hp, neoprene coated	4,600
4.	Pump, centrate	2	Centrifugal, 835 gpm, 150 ft head, 75 hp, carbon steel, neoprene lined	27,800
5.	Conveyor, dryer feed	1	Screw, 15 ft long x 16 in. dia, 5 hp, 40 tons/hr, carbon steel	4,400
	Subtotal			695,500

Area 8--Drying

	Item	No.	Description	Total material cost, 1979 $
1.	Dryer, $MgSO_3$	1	Rotary, 15 ft dia x 90 ft long, 150 hp, carbon steel	1,299,300
2.	Fan, combustion air	1	Forced draft, 5 in., 30 hp	15,800
3.	Tank, fuel oil	1	56 ft dia x 28 ft high, 515,900 gal, w/cover, carbon steel	51,100
4.	Heater, fuel oil	1	Steam, tube type, 177 ft^2, carbon steel	12,000
5.	Pump, fuel oil	2	Centrifugal, 10 gpm, 150 ft head, 2 hp, carbon steel	6,800

(continued)

TABLE 26 (continued)

	Item	No.	Description	Total material cost, 1979 $
6.	Conveyor, dryer product	1	Screw, 15 ft long x 16 in. dia, 15 hp, 18 tons/hr, carbon steel	4,400
7.	Conveyor, $MgSO_3$	1	Pneumatic, pressure, 100 hp	80,000
8.	Bin, $MgSO_3$ storage hold	1	5 ft dia x 7 ft straight side height, w/cover, carbon steel	700
9.	Feeder, $MgSO_3$ storage	1	Belt, 14 in. wide, 1 hp, 16 tons/hr	10,000
10.	Conveyor, reserve $MgSO_3$ storage	1	Belt, 14 in. wide x 100 ft long, 2 hp, 16 tons/hr, 100 ft/min	17,300
11.	Tripper	1	5 hp, 30 ft/min	18,000
12.	Bucket tractor, mobile equipment	1	Scraper tractor, 1-1/2 yd^3 capacity	48,800
13.	Hopper, $MgSO_3$ reserve storage	1	7 ft x 7 ft x 7 ft deep, 60° slope, carbon steel	400
14.	Feeder, reserve $MgSO_3$	1	Rotary stargate, 2 hp, 50 tons/hr	7,900
15.	Conveyor, reserve $MgSO_3$ feed	1	Pneumatic, pressure, 100 hp	80,000
16.	Silo, $MgSO_3$ live storage	1	17 ft dia x 26 ft straight side height, w/cover, carbon steel	10,200
17.	Feeder, calciner (enclosed)	1	Weigh belt, 18 in. wide, 1 hp, 16 tons/hr	8,500
18.	Conveyor, calciner feed	1	Belt, 18 in. wide x 10 ft long, 1 hp, 16 tons/hr, 100 ft/min	2,000
19.	Dust collector	1	Cyclone, 81,000 aft^3/min	43,600
20.	Dust collector	1	Bag filter, 81,000 aft^3/min	50,000
21.	Blower, dryer off-gas	1	Induced draft, 23 in., 300 hp	114,100
	Subtotal			1,880,900

(continued)

TABLE 26 (continued)

Area 9--Calcining

	Item	No.	Description	Total material cost, 1979 $
1.	Calciner	1	Fluid bed, 12 ft x 40 ft high, 12 in. fire brick, 10 in. insulating brick, carbon steel shell	405,000
2.	Dust collector	1	Multiclone, 43,700 aft^3/min	58,000
3.	Air preheater	1	Tube type, 9,347 ft^2, 316L stainless steel	132,200
4.	Waste heat boiler	1	Tube type, 529 ft^2, 316L stainless steel	20,200
5.	Cooler, solids	1	Tubed shell type, 4,963 ft^2, 6 ft dia x 50 ft long, 15 hp, twenty-seven 3 in. tubes	225,000
6.	Bin, MgO cooler	1	5 ft dia x 8 ft straight side height, w/cover, carbon steel	1,400
7.	Dust collector	1	Bag filter, 43,800 aft^3/min	36,000
8.	Fan, combustion air	1	Forced draft, 214 in., 200 hp	21,800
9.	Fan, oxidation air	1	Forced draft, 10 in., 40 hp	15,400
10.	Conveyor, recycle MgO	1	Pneumatic, pressure, 10 hp	43,000
11.	Silo, recycle MgO storage	4	41 ft dia x 62 ft straight side height, w/cover, carbon steel	266,400
	Vibrators	16	1/2 hp	21,500
	Subtotal			1,245,900

(continued)

TABLE 26 (continued)

Area 10--98% Sulfuric Acid Production

	Item	No.	Description	Total material cost, 1979 $
1.	Complete H_2SO_4 unit	1	Complete 98% sulfuric acid system	1,985,500
	Subtotal			1,985,500

Area 11--Acid Storage and Shipping

	Item	No.	Description	Total material cost, 1979 $
1.	Tanks, sulfuric acid storage	3	56 ft dia x 28 ft high, 575,200 gal, w/cover, carbon steel	224,700
2.	Pump, tank discharge	2	Centrifugal, 400 gpm, 100 ft head, 40 hp, carbon steel	10,500
	Subtotal			235,200

Storage Capacity

Storage requirements for raw materials and allowances for in-process streams are listed below.

Raw materials
- Makeup MgO storage silo - 30 days
- Limestone storage silo - 30 days

In-process storage
- Makeup MgO feed bin - 34 hours
- Recycle MgO feed bin - 1 hour
- Limestone feed bin - 1 day
- Slurry feed tank - 1 hour
- SO_2 absorber recirculation tank - 3 minutes
- Chloride neutralization tank - 30 minutes
- Centrate tank - 10 minutes
- Fuel oil tank - 30 days
- $MgSO_3$ live storage silo - 8 hours
- Reserve $MgSO_3$ storage building - 15 days
- Recycle MgO storage silo - 15 days
- Sulfuric acid storage tanks - 30 days

MAGNESIA PRODUCTION

Two distinctly different methods of producing magnesia are employed in the United States. One process is based on an adequate source of magnesite ($MgCO_3$) ore. Currently the only such plant operating in the United States is located at Gabbs, Nevada, at the site of large magnesite deposits. The processing varies with both the grade of ore being extracted and the product specifications which are determined by the magnesia end use. The production of chemically active magnesia such as that used in FGD systems requires the most extensive processing.

The other process is based on the use of seawater and either high-magnesium limestone or dolomite [$MgCa(CO_3)_2$]. The economical use of this process requires a location near seawater and an adequate source of dolomite or limestone. Dolomite is preferred because of its magnesium content. The process to be described is based on an operation which uses dolomite with approximately 50% $MgCO_3$ and 50% $CaCO_3$.

Since some of the information regarding these processes is of a proprietary nature, their description is not as detailed as that presented in the widely practiced production of lime from limestone. Control systems, plan and elevation drawings, and equipment costs are not included. Enough information was obtained, however, for the energy requirements assessment shown in the Economic Evaluation and Comparison section of this report. Both processes described are based on the production of chemically active magnesia suitable for use in FGD systems.

Magnesia From Magnesite

The flow diagram for this process is shown in Figure 22. Magnesite is selectively mined in a typical quarry operation involving drilling, blasting, loading, and hauling to the plant site. There it is crushed and sized to remove wastes and stockpiled according to grade. From the stockpile it is further beneficiated in a heavy medium separation system utilizing ferrosilicon and water. The magnesite recovered from the heavy medium separation is then ground and further beneficiated in a flotation system followed by washing and thickening. The underflow from the thickener, consisting of 60% solids, is further dewatered in a rotary disc filter. The filter cake containing about 95% $MgCO_3$ is then dried in a rotary dryer. The product from the dryer is then fed to a hearth furnace which serves as the calciner for the following reaction.

$$MgCO_3 \xrightarrow{\text{heat}} MgO + CO_2\uparrow$$

The hearth furnace is operated in the temperature range of 1600°F to 1800°F. The magnesia product is then cooled in a rotary drum cooler and sent to storage and shipping. The material balance and fuel requirements for this process are presented in Table 27. Either fuel oil or natural gas is used depending upon cost and availability. No. 6 fuel oil is used in the case shown.

Major Process Areas

The magnesite magnesia process is divided into the following areas.

1. Magnesite mining: The equipment in this area includes the drilling equipment, a front-end loader, and trucks.

2. Magnesite sizing: This area includes a jaw crusher, conveyors, classifying screens, and a cone crusher.

3. Separation: This area consists of a heavy medium separator and its supporting equipment such as pumps and screens, conveyors, and storage silos.

4. Flotation and washing: The area equipment includes a rod mill, ball mill, classifier, cyclone, flotation cells, pumps, and a washing tank.

5. Drying: Drying equipment consists of a filter, rotary dryer, and storage silo.

6. Calcining and storage: This final area includes conveyors, a hearth furnace, a rotary cooler, and a shipping storage silo.

The major equipment and horsepower requirements for each of these areas are shown in Table 28.

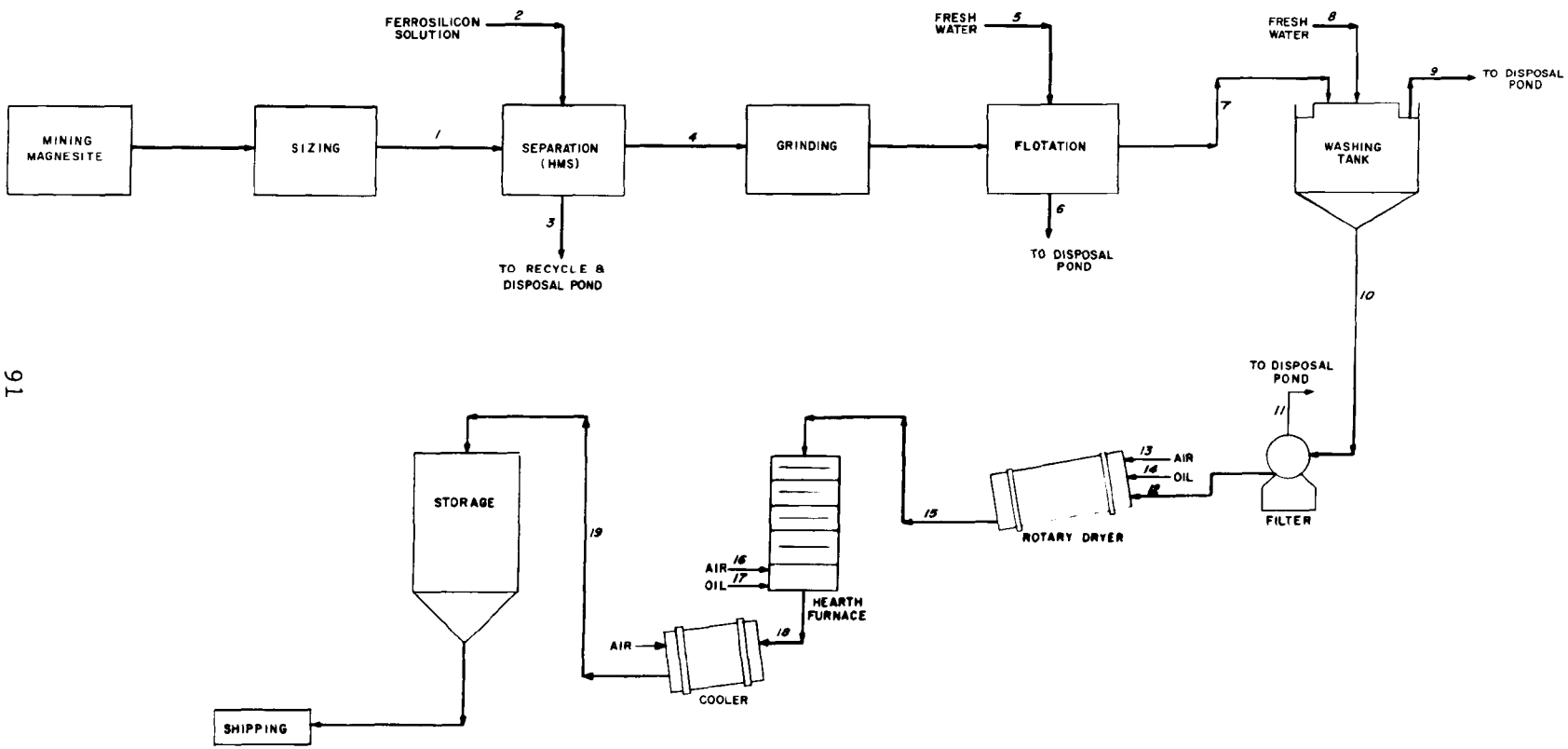

Figure 22. Magnesia from magnesite. Flow diagram.

TABLE 27. MAGNESIA FROM MAGNESITE

MATERIAL BALANCE

	Stream No.	1	2	3	4	5
	Description	Magnesite to HMS unit	Ferrosilicon solution to HMS unit	Waste to disposal pond	$MgCO_3$ to grinding	Fresh water to flotation
1	Total stream, lb/hr	145,700	74,800	167,800	52,700	351,800
2						
3						
4	sft^3/min (60°F)					
5	Temperature, °F					
6	Pressure, psig					
7	gpm					703
8	Specific gravity					1.0
9	pH					
10	Undissolved solids, %					

	Stream No.	6	7	8	9	10
	Description	Waste to disposal pond	$MgCO_3$ to washing thickener	Fresh water to washing thickener	Washing thickener overflow	Washing thickener underflow to filter
1	Total stream, lb/hr	354,700	49,900	98,700	79,300	69,300
2						
3						
4	sft^3/min (60°F)					
5	Temperature, °F					
6	Pressure, psig					
7	gpm	709	38	197	157	71
8	Specific gravity	1.1	2.6	1.0	1.01	1.96
9	pH					
10	Undissolved solids, %		85		1.1	60

	Stream No.	11	12	13	14	15
	Description	Filtrate to disposal pond	$MgCO_3$ to rotary dryer	Combustion air to rotary dryer	Oil to rotary dryer	$MgCO_3$ to hearth furnace
1	Total stream, lb/hr	23,100	46,200	18,010	516	41,600
2						
3						
4	sft^3/min (60°F)			3,800		
5	Temperature, °F					400
6	Pressure, psig					
7	gpm	46			1	
8	Specific gravity	1.0			0.91	
9	pH					
10	Undissolved solids, %					

	Stream No.	16	17	18	19	
	Description	Combustion air to hearth furnace	Oil to hearth furnace	MgO to cooler	MgO to storage and shipping	
1	Total stream, lb/hr	39,900	2,752	19,900	19,900	
2						
3						
4	sft^3/min (60°F)	8,400				
5	Temperature, °F			1,600	125	
6	Pressure, psig					
7	gpm		6			
8	Specific gravity		0.91			
9	pH					
10	Undissolved solids, %					

TABLE 28. MAGNESIA FROM MAGNESITE

MAJOR EQUIPMENT LIST AND HORSEPOWER

Equipment list	Horsepower
Mining	
Compressor	300
Front-end loader	270
Truck	237
Sizing	
Feeder	15
Jaw crusher	150
Conveyor (3)	1-1/2
Conveyor (2)	2, 3, 5, & 10
Cone crusher	
Separation	
Heavy medium separator	120
Flotation and washing	
Rod mill	250
Ball mill	500
Pumps (3)	2 & 1-1/2
Pumps (3)	3
Thickener	2
Drying	
Filters	5 & 7-1/2
Rotary dryer	3
Conveyor	3
Calcination and storage	
Hearth furnace	75
Rotary cooler	10
Elevator	5
Conveyor	3

Magnesia From Seawater

The flow diagram for this process is shown in Figure 23. This process produces magnesia from seawater and dolomite. A Gulf Coast location is assumed. Dolomite is shipped by rail to the plant from quarries in Alabama and Georgia. The dolomite rock received has been crushed to approximately 1-1/2 inch diameter prior to shipping. It is stockpiled over an underground conveyor system which feeds a rotary kiln which serves as the calciner for the decomposition of dolomite.

$$MgCa(CO_3)_2 \xrightarrow{\text{heat}} CaO + MgO + 2CO_2\uparrow$$

The 15-foot diameter by 265-foot-long kiln is fired with No. 6 fuel oil and operates at approximately 2500°F. Product from the kiln is cooled and stored prior to further processing. Exhaust gas from the kiln is treated for dust removal and the material recovered is conveyed to storage.

Seawater is pumped from the Gulf of Mexico to a slaker where the calcined dolomite from storage is next processed. A simplified form of the reaction which takes place in the slaker is as follows.

$$CaO + MgO + 2H_2O + Mg^{++} \rightarrow Mg(OH)_2 + MgO + Ca(OH)_2$$

This material is pumped to a thickener from which the magnesium hydroxide and magnesia are removed as underflow and the clarified seawater containing calcium hydroxide is returned to the Gulf. The reaction forming magnesium hydroxide continues in the thickener.

The thickener underflow containing the magnesium hydroxide and magnesia is then washed in a series of wash tanks to remove impurities and salt. Slurry with 18% solids from the final washer is filtered in rotary disc filters. The filter cake with 54% solids is pumped to the rotary hearth furnace where, at a temperature of up to 1800°F, the magnesium hydroxide is decomposed to magnesia.

$$Mg(OH)_2 \xrightarrow{\text{heat}} MgO + H_2O\uparrow$$

The calcined material is cooled in a rotary cooler and sent to storage and shipping. Material balance and fuel requirements are shown in Table 29.

Major Process Areas

The seawater magnesia process is divided into the following areas.

1. Mining: This area includes drilling equipment, a front-end loader, and trucks for a quarry operation.

2. Dolomite sizing and shipping: Ore crushing and sizing equipment is the same as the limestone classifying equipment.

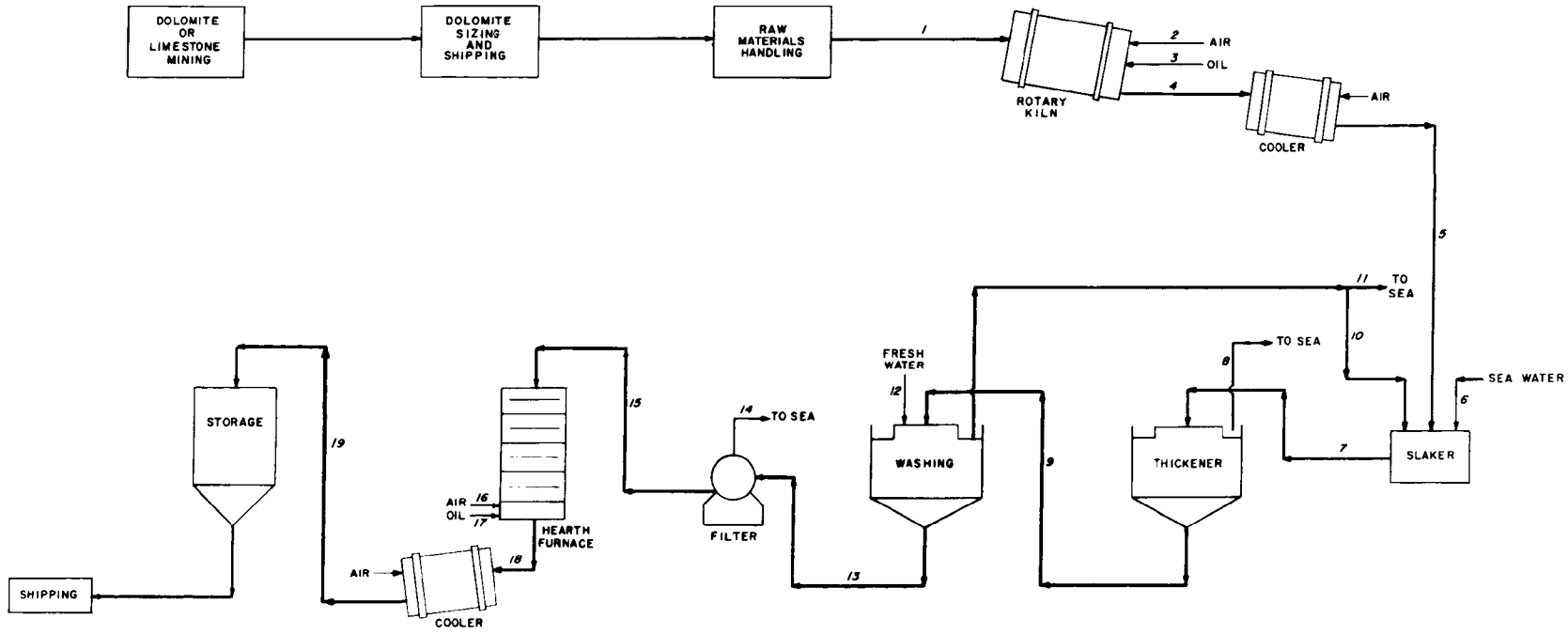

Figure 23. Magnesia from seawater. Flow diagram.

TABLE 29. MAGNESIA FROM SEAWATER

MATERIAL BALANCE

	Stream No.	1	2	3	4	5
	Description	Dolomite to rotary kiln	Combustion air to rotary kiln	Oil to rotary kiln	Calcined dolomite to cooler	Calcined dolomite to slaker
1	Total stream, lb/hr	60,000	129,700	5,072	31,200	31,200
2						
3						
4	sft^3/min (60°F)		28,400			
5	Temperature, °F				2,500	130
6	Pressure, psig					
7	gpm			11		
8	Specific gravity			0.91		
9	pH					
10	Undissolved solids, %					

	Stream No.	6	7	8	9	10
	Description	Seawater to slaker tank	Slurry to thickener	Thickener overflow	Thickener underflow to washing	Washing overflow to slaking
1	Total stream, lb/hr	3,998,500	4,191,300	4,025,700	165,600	161,700
2						
3						
4	sft^3/min (60°F)					
5	Temperature, °F					
6	Pressure, psig					
7	gpm	7,990	8,375	8,044	301	323
8	Specific gravity		1.0	1.0	1.1	1.0
9	pH					
10	Undissolved solids, %		0.7	0.3		

	Stream No.	11	12	13	14	15
	Description	Washing overflow to sea	Fresh water to washing	Magnesia slurry to filter	Filtrate to sea	Magnesia filter cake to hearth furnace
1	Total stream, lb/hr	161,700	249,900	92,000	61,300	34,800
2						
3						
4	sft^3/min (60°F)					
5	Temperature, °F					
6	Pressure, psig					
7	gpm	323	499	153	122	41
8	Specific gravity	1.0	1.0	1.2	1.0	1.7
9	pH					
10	Undissolved solids, %			18		54

	Stream No.	16	17	18	19	
	Description	Combustion air to hearth furnace	Oil to hearth furnace	MgO to cooler	MgO to storage and shipping	
1	Total stream, lb/hr	72,600	1,913	13,000	13,000	
2						
3						
4	sft^3/min (60°F)	15,300				
5	Temperature, °F			1,800	125	
6	Pressure, psig					
7	gpm		4			
8	Specific gravity		0.91			
9	pH					
10	Undissolved solids, %					

3. Raw materials handling: Hoppers and conveyors similar to those in the limestone slurry process materials handling area unload the dolomite from railcars to a stockpile and then to the rotary kiln for calcination.

4. Calcination dolomite: The equipment in this area includes a rotary kiln, rotary solids cooler, mixer for hydration, retention tank, classifier, and grinding mill.

5. Wet system: This area has a reactor, a thickener, a series of washing tanks and associated pumps, and a filter.

6. Magnesia calcination, storage, and shipping: This area includes a calcining hearth furnace, a conveyor, storage silos, and conveyor for loading the magnesia on railcars.

The major equipment items and horsepower requirements are shown in Table 30.

TABLE 30. MAGNESIA PRODUCTION FROM SEAWATER

MAJOR EQUIPMENT LIST AND HORSEPOWER

Equipment list	Horsepower
Mining	
Compressor	30
Front-end loader	270
Truck	237
Sizing and shipping	
Feeder	15
Conveyor (6)	1
Jaw crusher	40
Cone crusher	30
Raw materials handling	
Conveyors	5, 10, 15, & 75
Dolomite calcination	
Kiln	150
Pump (2)	1.5
Cooler	10
Hammer mill	50
Wet system	
Pumps (2)	5
Pumps (4)	100
Pumps (2)	200
Pumps (2)	500
Agitator	5 & 15
Pumps (4)	3
Pumps (6)	7.5
Pumps (2)	10 & 40
Filter	10
Magnesia calcination, storage, and shipping	
Pump (2)	3
Hearth furnace	75
Conveyor	10 & 15

ECONOMIC AND ENERGY EVALUATION AND COMPARISON

Capital investment and first-year annual revenue requirements were calculated for the base cases and all of the case variations. In addition, lifetime revenue requirements were calculated for the base cases and the power plant size case variations. Detailed results are tabulated in the appendix. In all cases the magnesia process costs include a credit for acid sales, as shown in the detailed results in the appendix.

The case variations of power plant size and remaining life, coal sulfur content, removal efficiency, and oil fuel are designed to illustrate the costs associated with ranges of conditions common in the utility industry. While they cannot define all of the combinations possible, they should be useful in projecting the results to other combinations of conditions.

A ground-to-ground energy assessment was made for the base-case conditions of the four processes. This assessment tabulates the total energy consumption for production and transportation of raw materials as well as FGD and waste disposal energy consumption. For the magnesia process an energy credit is assigned based on the equivalent energy consumption for production of an equal quantity of acid produced from sulfur delivered from Port Sulphur, Louisiana, including energy required for mining and delivery of sulfur as well as sulfuric acid net processing energy.

CAPITAL INVESTMENT

Capital investment summaries of the base cases and case variations for each of the processes are shown in Tables 31 through 34. For the same conditions the capital investments of the four processes differ by up to 45%.

The limestone slurry process has 1979 capital investments ranging from $25,121,000 (126 $/kW) for an existing 200-MW power plant to $75,075,000 (75 $/kW) for an existing 1,000-MW power plant. For the base-case conditions (a new 500-MW power plant burning 3.5% sulfur coal) the limestone slurry process capital investment is $48,943,000 (98 $/kW).

The lime slurry process using purchased lime has capital investments ranging from $22,758,000 (114 $/kW) for an existing 200-MW power plant to $71,098,000 (71 $/kW) for an existing 1,000-MW power plant. For the base case the capital investment is $45,319,000 (90 $/kW).

TABLE 31. LIMESTONE SLURRY PROCESS

TOTAL CAPITAL INVESTMENT SUMMARY

Case	Years remaining life	Total capital investment, $	$/kW
Coal-Fired Power Unit			
1.2 lb SO_2/MBtu heat input allowable emission; onsite solids disposal (ponding)			
200 MW E 3.5% sulfur	20	25,121,000	126
200 MW N 3.5% sulfur	30	25,529,000	128
500 MW E 3.5% sulfur	25	50,406,000	101
500 MW N 2.0% sulfur	30	39,848,000	80
• 500 MW N 3.5% sulfur	30	48,943,000	98
500 MW N 5.0% sulfur	30	54,797,000	110
1,000 MW E 3.5% sulfur	25	75,075,000	75
1,000 MW N 3.5% sulfur	30	71,730,000	71
90% SO_2 removal; onsite solids disposal (ponding)			
500 MW N 3.5% sulfur	30	50,649,000	101
Oil-Fired Power Unit			
0.8 lb SO_2/MBtu heat input allowable emission; onsite solids disposal (ponding)			
500 MW E 2.5% sulfur	25	38,636,000	77

Basis
- Midwest plant location represents project beginning mid-1977, ending mid-1980. Average cost basis for scaling, mid-1979.
- Stack gas reheat to 175°F.
- Minimum in-process storage; only pumps are spared.
- Unfixed disposal pond located 1 mile from power plant.
- Investment requirements for fly ash removal and disposal excluded; FGD process investment estimate begins with common feed plenum downstream of the ESP.
- Construction labor shortages with accompanying overtime pay incentive not considered.

TABLE 32. LIME SLURRY PROCESS

TOTAL CAPITAL INVESTMENT SUMMARY

Case	Years remaining life	Total capital investment, $	$/kW
Coal-Fired Power Unit			
1.2 lb SO_2/MBtu heat input allowable emission; onsite solids disposal (ponding)			
200 MW E 3.5% sulfur	20	22,758,000	114
200 MW N 3.5% sulfur	30	22,798,000	114
500 MW E 3.5% sulfur	25	46,446,000	93
500 MW N 2.0% sulfur	30	36,947,000	74
• 500 MW N 3.5% sulfur	30	45,319,000	90
500 MW N 5.0% sulfur	30	50,293,000	101
1,000 MW E 3.5% sulfur	25	71,098,000	71
1,000 MW N 3.5% sulfur	30	67,654,000	68
90% SO_2 removal; onsite solids disposal (ponding)			
500 MW N 3.5% sulfur	30	46,909,000	94
Oil-Fired Power Unit			
0.8 lb SO_2/MBtu heat input allowable emission; onsite solids disposal (ponding)			
500 MW E 2.5% sulfur	25	35,811,000	72

Basis

Midwest plant location represents project beginning mid-1977, ending mid-1980. Average cost basis for scaling, mid-1979.
Stack gas reheat to 175°F.
Minimum in-process storage; only pumps are spared.
Unfixed disposal pond located 1 mile from power plant.
Investment requirements for fly ash removal and disposal excluded; FGD process investment estimate begins with common feed plenum downstream of the ESP.
Construction labor shortages with accompanying overtime pay incentive not considered.

TABLE 33. LIME SLURRY PROCESS WITH ONSITE CALCINATION

TOTAL CAPITAL INVESTMENT SUMMARY

Case	Years remaining life	Total capital investment, $	$/kW
Coal-Fired Power Unit			
1.2 lb SO_2/MBtu heat input allowable emission; onsite solids disposal (ponding)			
200 MW E 3.5% sulfur	20	28,292,000	142
200 MW N 3.5% sulfur	30	28,371,000	142
500 MW E 3.5% sulfur	25	55,039,000	110
500 MW N 2.0% sulfur	30	43,407,000	87
• 500 MW N 3.5% sulfur	30	53,860,000	108
500 MW N 5.0% sulfur	30	61,187,000	122
1,000 MW E 3.5% sulfur	25	82,812,000	83
1,000 MW N 3.5% sulfur	30	79,667,000	80
90% SO_2 removal; onsite solids disposal (ponding)			
500 MW N 3.5% sulfur	30	55,910,000	112
Oil-Fired Power Unit			
0.8 lb SO_2/MBtu heat input allowable emission; onsite solids disposal (ponding)			
500 MW E 2.5% sulfur	25	42,391,000	85

Basis

Midwest plant location represents project beginning mid-1977, ending mid-1980. Average cost basis for scaling, mid-1979.
Stack gas reheat to 175°F.
Minimum in-process storage; only pumps are spared.
Unfixed disposal pond located 1 mile from power plant.
Investment requirements for fly ash removal and disposal excluded; FGD process investment estimate begins with common feed plenum downstream of the ESP.
Construction labor shortages with accompanying overtime pay incentive not considered.

TABLE 34. MAGNESIA PROCESS

TOTAL CAPITAL INVESTMENT SUMMARY

Case	Years remaining life	Total capital investment, $	$/kW
Coal-Fired Power Unit			
1.2 lb SO_2/MBtu heat input allowable emission			
200 MW E 3.5% sulfur	20	35,119,000	176
200 MW N 3.5% sulfur	30	34,439,000	172
500 MW E 3.5% sulfur	25	66,837,000	134
500 MW N 2.0% sulfur	30	53,703,000	108
• 500 MW N 3.5% sulfur	30	65,911,000	132
500 MW N 5.0% sulfur	30	75,805,000	152
1,000 MW E 3.5% sulfur	25	103,641,000	104
1,000 MW N 3.5% sulfur	30	101,353,000	101
90% SO_2 removal			
500 MW N 3.5% sulfur	30	68,620,000	137
Oil-Fired Power Unit			
0.8 lb SO_2/MBtu heat input allowable emission			
500 MW E 2.5% sulfur	25	42,635,000	85

Basis
Midwest plant location represents project beginning mid-1977, ending mid-1980. Average cost basis for scaling, mid-1979.
Stack gas reheat to 175°F.
Minimum in-process storage; only pumps are spared.
Investment requirements for fly ash removal and disposal excluded; FGD process investment estimate begins with common feed plenum downstream of the ESP.
Construction labor shortages with accompanying overtime pay incentive not considered.
Credit for byproduct acid included.

The lime slurry process using lime calcined onsite has capital investments ranging from $28,292,000 (142 $/kW) for an existing 200-MW power plant to $82,812,000 (83 $/kW) for an existing 1,000-MW power plant. For the base case the capital investment is $53,860,000 (108 $/kW).

The magnesia process has capital investments ranging from $34,439,000 (172 $/kW) for an existing 200-MW power plant to $103,641,000 (104 $/kW) for an existing 1,000-MW power plant. For the base case the capital investment is $65,911,000 (132 $/kW).

The cost differences are further illustrated by the breakdown of base-case process equipment costs by area shown in Tables 35 through 38.

Base Case

The differences in capital investment between the lime slurry process using purchased lime and the limestone slurry process is the result of the simpler feed preparation requirements for lime and the higher utilization rate of lime compared with limestone. The lime does not require crushing and milling equipment and the lower stoichiometry of the lime process allows the use of smaller equipment than the limestone process. The higher lime utilization also results in a lower pond construction cost ranging from 9% for the existing 200-MW unit to 16% for the 5% sulfur coal, 500-MW unit.

These capital cost advantages for the lime slurry process are counteracted in the lime slurry process with onsite calcination by the additional equipment required in the materials handling area and by the limestone calcining equipment. The additional processing equipment required to calcine the limestone increases the base-case direct investment by 19%.

The primary reason for the higher capital investment costs for the magnesia process is the difference between the cost of sludge ponding and the cost of regenerating the MgO. Base-case limestone pond construction direct cost is $5,145,000 and waste disposal costs are $1,688,000 including land. The direct investment for the base-case magnesia slurry processing, drying, and calcination areas is $8,871,000. The recovery system requires that chloride be removed before entering the SO_2 absorber, which adds another $5,066,000 for chloride scrubbing. (The effect of conditions under which the chloride scrubber could be omitted and the effect of sludge fixation on the cost differentials are discussed below.) The acid production, and storage and shipping areas also add an additional $6,994,000. The costs related to spent slurry processing are thus about three times greater for the recovery process than for the waste-producing processes. The elimination of pond land and construction costs does not compensate for the additional equipment costs required for the recovery process.

TABLE 35. LIMESTONE SLURRY PROCESS BASE CASE

AREA PROCESS EQUIPMENT AND INSTALLATION COSTS (k$)

	Materials handling	Feed preparation	Gas handling	SO_2 absorption	Stack gas reheat	Solids disposal	Total	% of total direct investment	% of total capital investment
Equipment									
Material	452	618	812	4,307	986	44	7,219	27.6	14.7
Labor	143	116	78	749	122	25	1,233	4.7	2.5
Piping and insulation									
Material	13	180	-	1,539	57	885	2,674	10 2	5.5
Labor	3	87	-	484	38	367	979	3.8	2.0
Ductwork, chutes, and supports									
Material	-	16	1,562	-	-	-	1,578	6.0	3.2
Labor	-	13	1,187	-	-	-	1,200	4.6	2.4
Concrete foundations									
Material	113	55	12	80	-	13	273	1.1	0.6
Labor	454	211	51	223	-	37	976	3.7	2.0
Structural									
Material	256	-	-	181	-	2	439	1.7	0.9
Labor	91	-	19	441	-	12	563	2.2	1.2
Electrical									
Material	63	92	195	163	1	66	580	2.2	1.2
Labor	159	174	347	277	2	197	1,156	4.4	2.4
Instruments									
Material	11	66	46	426	63	6	618	2.4	1.3
Labor	3	16	8	79	12	2	120	0.5	0.2
Paint and miscellaneous									
Material	1	1	-	4	-	3	9	-	-
Labor	4	7	1	21	1	20	54	0.2	0.1
Buildings									
Material	-	39	-	-	-	-	39	0.2	0.1
Labor	-	68	-	-	-	-	68	0.3	0.1
Excavation and site preparation	-	-	-	-	-	9	9	-	-
Subtotal	1,767	1,758	4,318	8,974	1,282	1,688	19,787	75.8	40.4
Percent of total direct investment	6.8	6.7	16.5	34.4	4.9	6.5			

Note: mid-1979 cost basis.

TABLE 36. LIME SLURRY PROCESS BASE CASE

AREA PROCESS EQUIPMENT AND INSTALLATION COSTS (k$)

	Materials handling	Feed preparation	Gas handling	SO_2 absorption	Stack gas reheat	Solids disposal	Total	% of total direct investment	% of total capital investment
Equipment									
Material	476	195	812	4,098	986	42	6,609	27.6	14.6
Labor	403	77	78	693	122	24	1,397	5.8	3.1
Piping and insulation									
Material	11	62	-	1,458	57	844	2,432	10.1	5.4
Labor	7	40	-	459	38	350	894	3.7	2.0
Ductwork, chutes, and supports									
Material	23	7	1,562	-	-	-	1,592	6.6	3.5
Labor	12	6	1,187	-	-	-	1,205	5.0	2.7
Concrete foundations									
Material	88	21	12	76	-	13	210	0.9	0.5
Labor	438	81	51	211	-	37	818	3.4	1.8
Structural									
Material	123	8	-	171	-	2	304	1.3	0.7
Labor	185	18	19	418	-	12	652	2.7	1.4
Electrical									
Material	82	49	195	154	1	64	545	2.3	1.2
Labor	94	57	347	263	2	190	953	4.0	2.1
Instruments									
Material	12	21	46	403	63	6	551	2.3	1.2
Labor	6	5	8	76	12	2	109	0.5	0.2
Paint and miscellaneous									
Material	1	2	-	4	-	3	10	-	-
Labor	8	11	1	20	1	19	60	0.3	0.1
Buildings									
Material	-	-	-	-	-	-	-	-	-
Labor	-	-	-	-	-	-	-	-	-
Excavation and site preparation	9	-	-	-	-	8	17	-	-
Subtotal	1,978	660	4,318	8,504	1,282	1,616	18,358	76.6	40.5
Percent of total direct investment	8.3	2.8	18.0	35.5	5.3	6.7			

Note: mid-1979 cost basis.

TABLE 37. LIME SLURRY PROCESS WITH ONSITE CALCINATION BASE CASE

AREA PROCESS EQUIPMENT AND INSTALLATION COSTS (k$)

	Materials handling	Limestone calcination	Feed preparation	Gas handling	SO_2 absorption	Stack gas reheat	Solids disposal	Total	% of total direct investment	% of total capital investment
Equipment										
Material	641	1,625	195	812	4,098	986	42	8,399	29.5	15.6
Labor	203	1,361	77	78	693	122	24	2,558	9.0	4.7
Piping and insulation										
Material	21	11	62	-	1,458	57	844	2,453	8.6	4.6
Labor	4	4	40	-	459	38	350	895	3.1	1.7
Ductwork, chutes, and supports										
Material	38	90	7	1,562	-	-	-	1,697	6.0	3.2
Labor	30	46	6	1,187	-	-	-	1,269	4.4	2.4
Concrete foundation										
Material	160	23	21	12	76	-	13	305	1.1	0.6
Labor	641	113	81	51	211	-	37	1,134	4.0	2.1
Structural										
Material	361	22	8	-	171	-	2	564	2.0	1.0
Labor	127	34	18	19	418	-	12	628	2.2	1.2
Electrical										
Material	89	95	49	195	154	1	64	647	2.3	1.2
Labor	223	108	57	347	263	2	190	1,190	4.2	2.2
Instruments										
Material	16	90	21	46	403	63	6	645	2.3	1.2
Labor	4	17	5	8	76	12	2	124	0.4	0.2
Paint and miscellaneous										
Material	2	3	2	-	4	-	3	14	-	-
Labor	10	12	11	1	20	1	19	74	0.3	0.1
Excavation and site preparation	-	-	-	-	-	-	8	8	-	-
Subtotal	2,570	3,654	660	4,318	8,504	1,282	1,616	22,604	79.4	42.0
Percent of total direct investment	9.0	12.8	2.3	15.2	29.9	4.5	5.7			

Note: mid-1979 cost basis.

TABLE 38. MAGNESIA PROCESS BASE CASE

AREA EQUIPMENT AND INSTALLATION COSTS (k$)

	Materials handling	Feed preparation	Gas handling	SO_2 absorption	Stack gas reheat	Chloride purge	Slurry Processing	Drying	Calcining	Acid production	Acid storage	Total	% of total direct investment	% of total capital investment
Direct Investment														
Equipment														
Material	302	82	840	3,707	988	2,297	696	1,881	1,246	-	235	12,274	34.7	18.6
Labor	172	54	82	442	154	585	77	2,355	542	-	352	4,815	13.6	7.4
Piping and insulation														
Material	2	50	-	317	12	775	44	17	34	-	23	1,274	3.6	1.9
Labor	2	34	-	62	10	364	28	19	34	-	8	561	1.6	0.9
Ductwork, chutes, and supports														
Material	3	10	1,562	-	-	-	10	171	50	-	-	1,806	5.1	2.7
Labor	2	4	1,187	-	-	-	5	160	22	-	-	1,380	3.9	2.1
Concrete foundations														
Material	5	-	12	25	-	33	8	34	16	-	29	162	0.5	0.2
Labor	28	-	53	99	-	130	31	150	73	-	147	711	2.0	1.2
Structural														
Material	17	13	-	159	-	150	6	38	22	-	15	420	1.2	0.6
Labor	8	7	20	48	-	45	2	22	32	-	56	240	0.7	0.4
Electrical														
Material	53	7	300	98	-	147	81	85	32	-	12	815	2.3	1.2
Labor	53	7	539	176	-	265	80	85	31	-	11	1,247	3.5	1.9
Instruments														
Material	31	20	21	216	24	225	26	26	68	-	31	688	2.0	1.0
Labor	11	8	8	56	8	34	8	10	23	-	10	176	0.5	0.3
Paint and miscellaneous														
Material	2	2	-	5	-	2	1	1	2	-	-	15	-	-
Labor	13	5	1	37	2	14	7	3	16	-	-	98	0.3	0.1
Buildings														
Material	-	-	-	-	-	-	-	210	-	-	-	210	0.6	0.3
Labor	-	-	-	-	-	-	-	251	-	-	-	251	0.7	0.4
Excavation and site preparation	-	-	-	-	-	-	-	-	-	-	65	65	0.2	0.1
Battery limits	-	-	-	-	-	-	-	-	-	6,000	-	6,000	17.0	9.1
Subtotal	704	303	4,625	5,447	1,198	5,066	1,110	5,518	2,243	6,000	994	33,208	94.0	53.9
Percent of total direct investment	2.0	0.9	13.1	15.4	3.4	14.3	3.1	15.7	6.3	17.0	2.8			

Note: mid-1979 cost basis.

The magnesia process has much lower materials handling and preparation costs and substantially lower SO_2 absorption costs. The gas handling costs are slightly higher than the other processes because of the waste streams from the recovery area that are bled to the scrubber system. The SO_2 absorption costs are lower because greater reactivity of the MgO permits the use of a simpler scrubber.

Case Variations

Figure 24 illustrates the effect of new power unit size on the four processes. The three waste-producing process costs begin to level off at about a 1,000-MW power plant size while the magnesia process cost continues to increase. The magnesia process has much more equipment and the equipment it has in common with the three waste-producing processes, such as flue gas booster fans and stack gas reheaters, are larger and more expensive because of the additional gas streams from the rotary dryer and the acid plant. Since the magnesia process is more equipment-intensive there is less economy of scale for it than for the waste-producing processes.

This characteristic is also seen in the waste-producing processes. The limestone slurry process and the lime slurry process each have very similar equipment, both in number and in cost. The absolute increase in capital investment from the 500-MW to 1,000-MW power plant size is very nearly the same for both. The lime slurry process with onsite calcination, with its limestone calcination area, has more equipment and the capital investment increases at a higher rate with increasing power plant size than it does in the limestone slurry process. The same pattern is seen in the existing units.

Figure 25 shows the change in unit investment cost ($/kW) with power unit size. The unit investment curves reflect the same information found in the capital investment graphs.

The effect of sulfur content is shown in Figure 26 for coal sulfur contents of 2.0%, 3.5%, and 5.0%. The effect is similar for all of the processes. The capital investments are reduced 18% to 19% for the 2.0% sulfur coal and increased 12% to 15% for the 5.0% sulfur coal, both compared to the 3.5% sulfur coal. There is a slightly greater increase in capital investment with coal sulfur content for the magnesia process because of the extensive equipment requirements for product processing.

The effect of 90% SO_2 removal, compared with the base case 79% removal, is slight for all of the processes. The effect is an increase in the raw material, scrubber, and scrubber effluent processing areas which increases capital investment by 3% to 4%.

The use of a 2.5% sulfur fuel oil reduces capital investment about 20%, compared to the base case, for the waste-producing processes. The lower cost is largely the result of the lower sulfur content and the

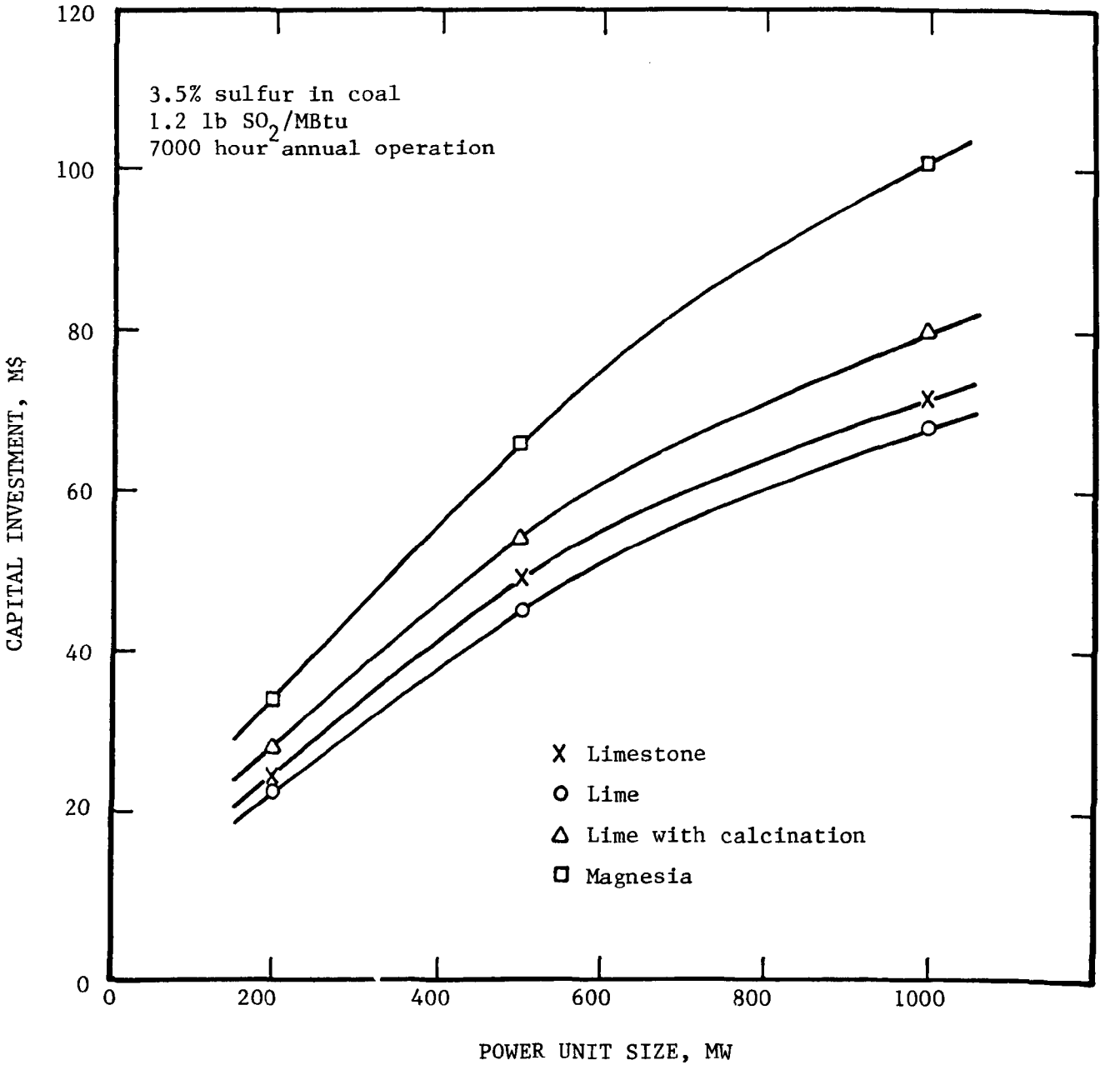

Figure 24. All processes. Effect of power unit size on capital investment: new coal-fired units.

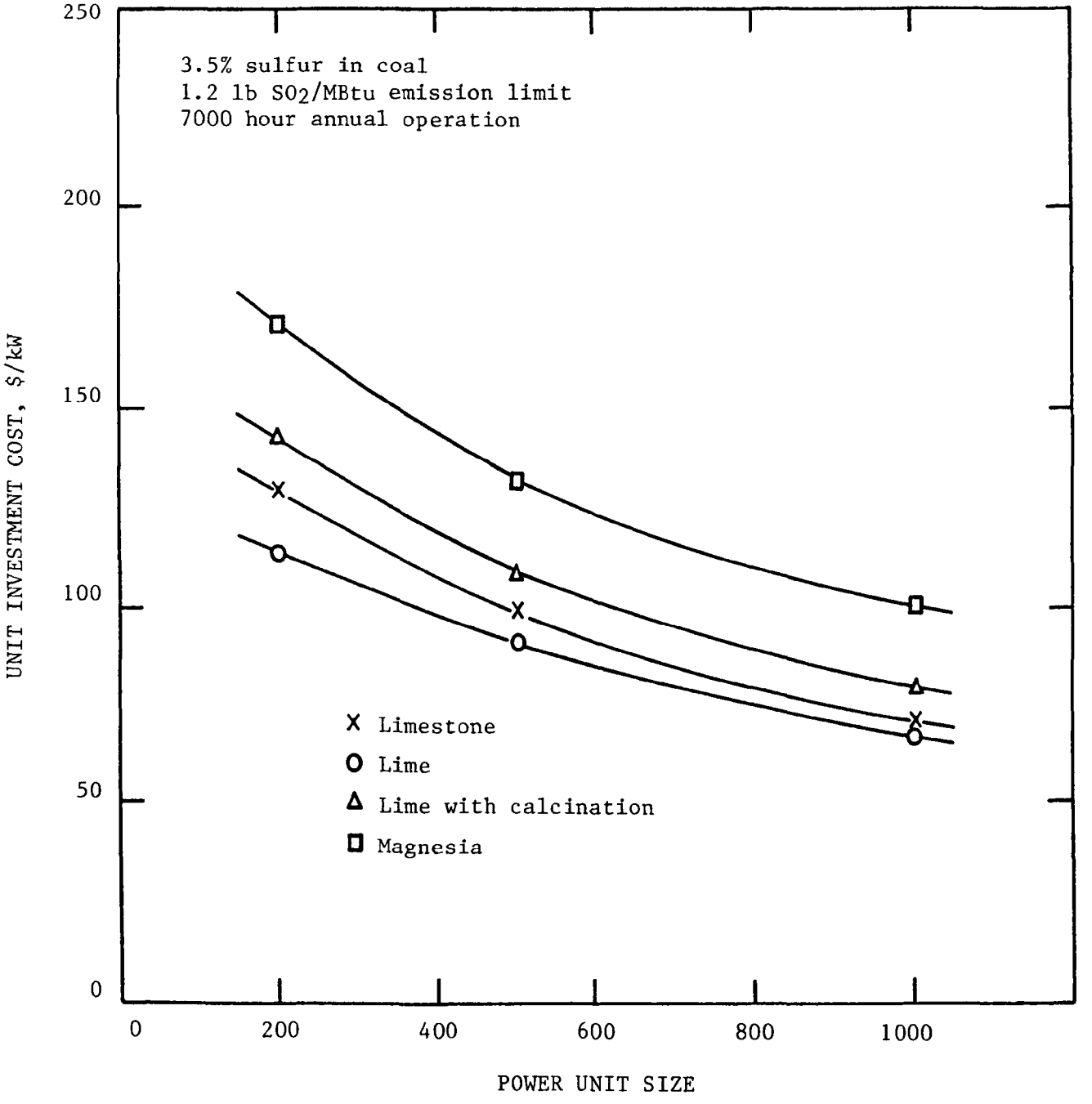

Figure 25. All processes. Effect of power unit size on unit investment cost, $/kW: new coal-fired units.

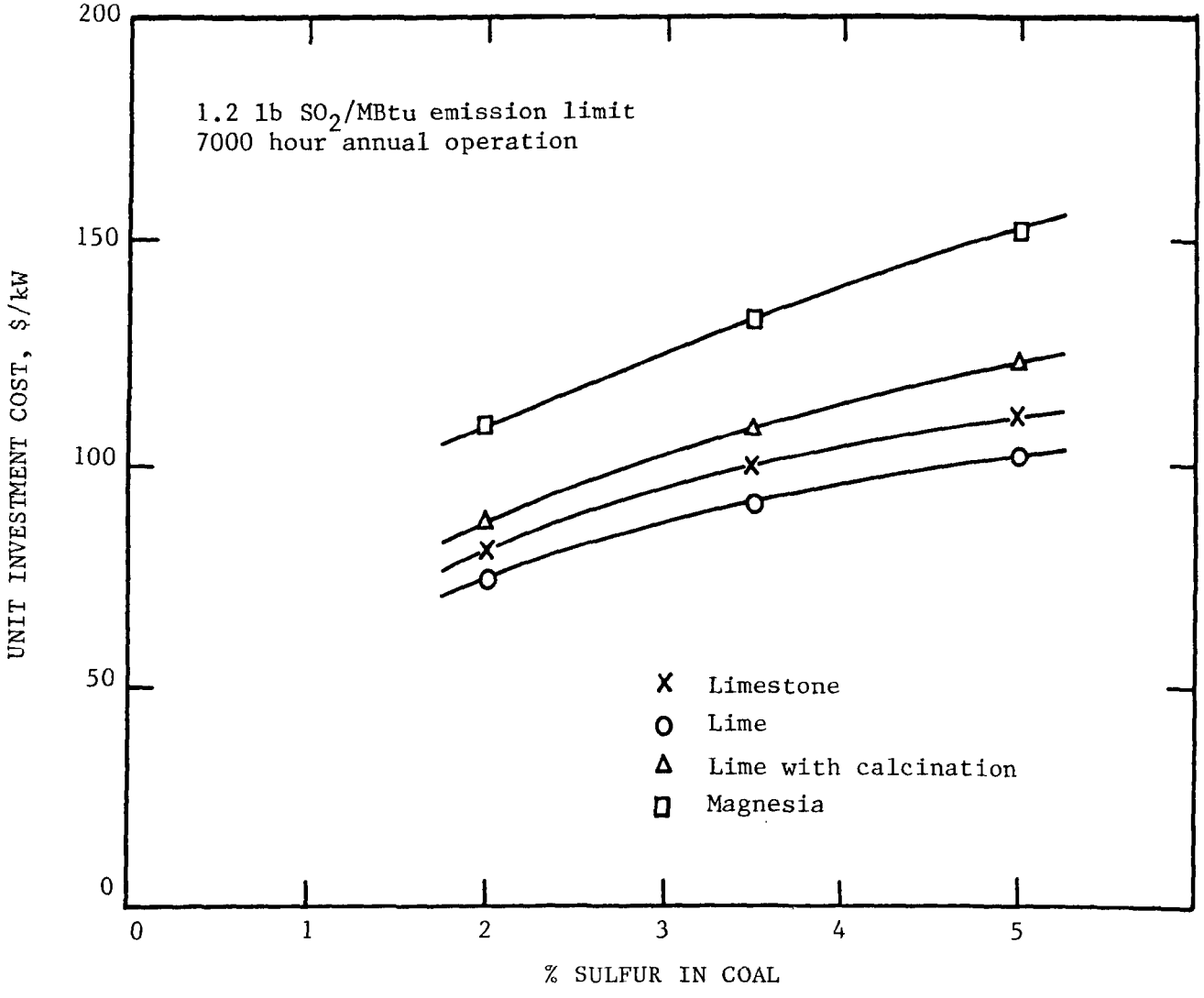

Figure 26. All processes. Effect of sulfur content of coal on unit investment cost, $/kW: new 500-MW coal-fired units.

reduced gas rate associated with oil fuel. The oil-fuel magnesia case is reduced 36% compared with the base case. The greater cost reduction in this case is a result of elimination of the chloride removal system in addition to the cost reductions associated with lower sulfur and gas rates.

ANNUAL REVENUE REQUIREMENTS

The detailed results for each process are shown in the appendix and are summarized in Tables 39 through 42. When comparing results, it should be remembered that limestone and the lime processes are waste-producing processes and magnesia is a recovery process; therefore, a credit for the sale of sulfuric acid at $25 per ton is included in the magnesia process annual revenue requirements.

The ranking of annual revenue requirements for the processes is about the same as the capital investment rankings. Revenue requirements for the limestone slurry process range from $7,147,200 (5.11 mills/kWh) for a new 200-MW, 3.5% sulfur coal-fired unit to $23,122,300 (3.30 mills/kWh) for an existing 1,000-MW, 3.5% sulfur coal-fired unit. The base case is $14,082,600 (4.02 mills/kWh). The annual revenue requirements for the lime slurry process using purchased lime range from $7,213,200 (5.15 mills/kWh) for the new, 200-MW coal-fired unit to $25,387,500 (3.63 mills/kWh). The base case is $14,887,700 (4.25 mills/kWh). For the lime slurry process with onsite calcination, they range from $8,022,800 (5.73 mills/kWh) to $25,456,200 (3.64 mills/kWh). The base case is $15,558,500 (4.45 mills/kWh).

The sulfuric-acid-producing magnesia process has greater annual revenue requirements than the waste-producing processes. The base-case cost is an average of 19% higher than the three base-case waste-producing processes. The annual revenue requirements for the magnesia process range from $9,273,500 (6.62 mills/kWh) for the new 200-MW, 3.5% sulfur coal-fired unit to $28,812,300 (4.12 mills/kWh) for the existing 1,000-MW, 3.5% sulfur coal-fired unit. The base case is $17,664,600 (5.05 mills/kWh). The annual revenue requirements for the four base cases are further illustrated by the area breakdown of the direct costs in Tables 43-46.

In comparing the base-case direct costs, the greatest difference between the limestone slurry process and the lime slurry process is in raw material costs. The cost for limestone is 0.32 mills/kWh, compared with 0.82 mills/kWh for lime. The slightly lower conversion costs and indirect costs for the lime slurry process do not fully compensate for this difference, making the limestone slurry process the lowest of the four processes in revenue requirements.

TABLE 39. LIMESTONE SLURRY PROCESS

TOTAL ANNUAL REVENUE REQUIREMENTS SUMMARY

Case	Years remaining life	Total annual revenue requirements	Mills/kWh	$/ton (bbl) of coal (oil) burned	$/MBtu heat input	$/ton sulfur removed
Coal-Fired Power Unit						
1.2 lb SO_2/MBtu heat input allowable emission; onsite solids disposal (ponding)						
200 MW E 3.5% sulfur	20	7,469,000	5.34	11.79	0.56	503
200 MW N 3.5% sulfur	30	7,147,200	5.11	11.66	0.55	499
500 MW E 3.5% sulfur	25	14,771,500	4.22	9.63	0.46	413
500 MW N 2.0% sulfur	30	11,637,200	3.32	7.76	0.37	718
• 500 MW N 3.5% sulfur	30	14,082,600	4.02	9.39	0.45	402
500 MW N 5.0% sulfur	30	15,898,600	4.54	10.60	0.50	293
1,000 MW E 3.5% sulfur	25	23,122,300	3.30	7.71	0.37	330
1,000 MW N 3.5% sulfur	30	21,761,300	3.11	7.50	0.36	332
90% SO_2 removal; onsite solids disposal (ponding)						
500 MW N 3.5% sulfur	30	14,557,400	4.15	9.70	0.46	356
Oil-Fired Power Unit						
0.8 lb SO_2/MBtu heat input allowable emission; onsite solids disposal (ponding)						
500 MW E 2.5% sulfur	25	11,557,700	3.30	2.16	0.36	778

Basis
Midwest plant location, 1980 revenue requirements.
Power unit on-stream time, 7,000 hr/yr.
Stack gas reheat to 175°F.
Investment and revenue requirement for removal and disposal of fly ash excluded.

TABLE 40. LIME SLURRY PROCESS

TOTAL ANNUAL REVENUE REQUIREMENTS SUMMARY

Case	Years remaining life	Total annual revenue requirements	Mills/kWh	$/ton (bbl) of coal (oil) burned	$/MBtu heat input	$/ton sulfur removed
Coal-Fired Power Unit						
1.2 lb SO_2/MBtu heat input allowable emission; onsite solids disposal (ponding)						
200 MW E 3.5% sulfur	20	7,591,000	5.42	11.99	0.57	514
200 MW N 3.5% sulfur	30	7,213,200	5.15	11.76	0.56	504
500 MW E 3.5% sulfur	25	15,518,400	4.43	10.12	0.48	434
500 MW N 2.0% sulfur	30	11,710,600	3.35	7.81	0.37	723
• 500 MW N 3.5% sulfur	30	14,887,700	4.25	9.92	0.47	425
500 MW N 5.0% sulfur	30	17,372,400	4.96	11.58	0.55	321
1,000 MW E 3.5% sulfur	25	25,387,500	3.63	8.46	0.40	363
1,000 MW N 3.5% sulfur	30	23,916,100	3.42	8.25	0.39	353
90% SO_2 removal; onsite solids disposal (ponding)						
500 MW N 3.5% sulfur	30	15,593,800	4.46	10.40	0.50	381
Oil-Fired Power Unit						
0.8 lb SO_2/MBtu heat input allowable emission; onsite solids disposal (ponding)						
500 MW E 2.5% sulfur	25	11,576,000	3.31	2.16	0.36	780

Basis
Midwest plant location, 1980 revenue requirements.
Power unit on-stream time, 7,000 hr/yr.
Stack gas reheat to 175°F.
Investment and revenue requirement for removal and disposal of fly ash excluded.

TABLE 41. LIME SLURRY PROCESS WITH ONSITE CALCINATION

TOTAL ANNUAL REVENUE REQUIREMENTS SUMMARY

Case	Years remaining life	Total annual revenue requirements	Mills/kWh	$/ton (bbl) of coal (oil) burned	$/MBtu heat input	$/ton sulfur removed
Coal-Fired Power Unit						
1.2 lb SO_2/MBtu heat input allowable emission; onsite solids disposal (ponding)						
200 MW E 3.5% sulfur	20	8,429,400	6.02	13.31	0.63	570
200 MW N 3.5% sulfur	30	8,022,800	5.73	13.08	0.62	561
500 MW E 3.5% sulfur	25	16,194,900	4.63	10.56	0.50	452
500 MW N 2.0% sulfur	30	12,601,100	3.60	8.40	0.40	778
• 500 MW N 3.5% sulfur	30	15,558,500	4.45	10.37	0.49	445
500 MW N 5.0% sulfur	30	17,836,300	5.10	11.89	0.57	329
1,000 MW E 3.5% sulfur	25	25,456,200	3.64	8.49	0.40	364
1,000 MW N 3.5% sulfur	30	24,125,800	3.45	8.32	0.40	357
90% SO_2 removal; onsite solids disposal (ponding)						
500 MW N 3.5% sulfur	30	16,161,800	4.62	10.77	0.51	395
Oil-Fired Power Unit						
0.8 lb SO_2/MBtu heat input allowable emission; onsite solids disposal (ponding)						
500 MW E 2.5% sulfur	25	12,793,100	3.66	2.39	0.40	868

Basis
Midwest plant location, 1980 revenue requirements.
Power unit on-stream time, 7,000 hr/yr.
Stack gas reheat to 175°F.
Investment and revenue requirement for removal and disposal of fly ash excluded.

TABLE 42. MAGNESIA PROCESS

TOTAL NET ANNUAL REVENUE REQUIREMENTS SUMMARY

Case	Years remaining life	Total gross[a] annual revenue requirements	Total net[b] annual revenue requirements	Mills/kWh	$/ton (bbl) of coal (oil) burned	$/MBtu heat input	$/ton sulfur removed
Coal-Fired Power Unit							
1.2 lb SO_2/MBtu heat input allowable emission							
200 MW E 3.5% sulfur	20	10,948,300	9,808,300	7.01	15.48	0.74	669
200 MW N 3.5% sulfur	30	10,378,500	9,273,500	6.62	15.12	0.72	653
500 MW E 3.5% sulfur	25	21,072,800	18,312,800	5.23	11.94	0.57	515
500 MW N 2.0% sulfur	30	15,905,700	14,663,200	4.19	9.77	0.47	914
● 500 MW N 3.5% sulfur	30	20,487,900	17,787,900	5.08	11.86	0.56	512
500 MW N 5.0% sulfur	30	24,562,500	20,407,500	5.83	13.60	0.65	380
1,000 MW E 3.5% sulfur	25	34,214,800	28,812,300	4.12	9.60	0.46	415
1,000 MW N 3.5% sulfur	30	32,961,000	27,738,500	3.96	9.56	0.46	417
90% SO_2 removal							
500 MW N 3.5% sulfur	30	21,551,200	18,473,700	5.28	12.31	0.59	464
Oil-Fired Power Unit							
0.8 lb SO_2/MBtu heat input allowable emission							
500 MW E 2.5% sulfur	25	13,367,600	12,177,600	3.48	2.28	0.38	818

Basis
Midwest plant location, 1980 revenue requirements.
Power unit on-stream time, 7,000 hr/yr.
Stack gas reheat to 175°F.
Investment and revenue requirement for removal and disposal of fly ash excluded.

a. Credit for sulfuric acid sale not included.
b. Credit for sulfuric acid sale included.

TABLE 43. LIMESTONE SLURRY PROCESS BASE CASE

ANNUAL REVENUE REQUIREMENTS DIRECT COSTS

	Total		Materials handling	Feed preparation	Gas handling	SO_2 absorption	Stack gas reheat	Solids disposal	Services, utilities, and miscellaneous	Pond construction	Total annual quantities	Total annual dollars	% of annual revenue requirements
Total direct investment, $	26,119,000		1,767,000	1,758,000	4,318,000	8,974,000	1,282,000	1,688,000	1,187,000	5,145,000		26,119,000	
Total depreciable investment, $	46,898,000												
Total capital investment, $	48,943,000												
Direct Costs	Unit cost, $	Raw material											
Delivered raw materials													
Limestone	7.00/ton												
Annual quantity, tons		159,300									159,300		
Annual cost, $		1,115,100										1,115,100	0.82
Subtotal raw materials cost		1,115,100										1,115,100	0.82
Conversion costs													
Operating labor and supervision	12.50/man-hr												
Annual quantity, man-hr			4,200	6,600	1,690	8,500	1,500	3,500	-	-	25,990		
Annual cost, $			52,500	82,500	21,100	106,200	18,800	43,800	-	-		324,900	2.31
Utilities													
Steam	2.00/MBtu												
Annual quantity, MBtu			-	-	-	-	489,800	-	-	-	489,800		
Annual cost, $			-	-	-	-	979,600	-	-	-		979,600	6.96
Process water	0.12/kgal												
Annual quantity, kgal			-	-	-	243,400	-	-	-	-	243,400		
Annual cost, $			-	-	-	29,200	-	-	-	-		29,200	0.21
Electricity	0.029/kWh												
Annual quantity, kWh			675,000	2,657,000	26,100,000	23,699,000	-	456,000	600,000	-	54,188,000		
Annual cost, $			19,600	77,100	756,900	687,300	-	13,200	17,400	-		1,571,500	11.17
Maintenance (labor and material)													
Annual cost, $			141,400	140,600	345,400	717,900	102,600	135,000	95,000	154,400		1,832,300	13.04
Analyses	17.00/man-hr												
Annual quantity, man-hr		1,500	-	-	-	1,880	-	380	-	-	3,760		
Annual cost, $		25,500	-	-	-	32,000	-	6,400	-	-		63,900	0.45
Subtotal conversion costs		25,500	213,500	300,200	1,123,400	1,572,600	1,101,000	198,400	112,400	154,400		4,801,400	34.14
Total direct costs		1,140,600	213,500	300,200	1,123,400	1,572,600	1,101,000	198,400	112,400	154,400		5,916,500	42.06
Percent of total direct costs		19.28	3.61	5.07	18.99	26.58	18.61	3.35	1.90	2.61			

TABLE 44. LIME SLURRY PROCESS BASE CASE

ANNUAL REVENUE REQUIREMENTS DIRECT COSTS

		Total	Materials handling	Feed preparation	Gas handling	SO_2 absorption	Stack gas reheat	Solids disposal	Services, utilities, and miscellaneous	Pond construction	Total annual quantities	Total annual dollars	% of annual revenue requirements
Total direct investment, $		23,964,000	1,978,000	660,000	4,318,000	8,504,000	1,282,000	1,616,000	1,101,000	4,505,000		23,964,000	
Total depreciable investment, $		43,126,000											
Total capital investment, $		45,319,000											
Direct Costs	Unit cost, $	Raw material											
Delivered raw materials													
Lime	42.00/ton												
Annual quantity, tons		68,600									68,600		
Annual cost, $		2,881,200										2,881,200	19.35
Subtotal raw materials cost		2,881,200										2,881,200	19.35
Conversion costs													
Operating labor and supervision	12.50/man-hr												
Annual quantity, man-hr			4,200	6,600	1,690	8,500	1,500	3,500	-	-	25,990		
Annual cost, $			52,500	82,500	21,100	106,200	18,800	43,800	-	-		324,900	2.18
Utilities													
Steam	2.00/MBtu												
Annual quantity, MBtu			-	-	-	-	488,400	-	-	-	488,400		
Annual cost, $			-	-	-	-	976,800	-	-	-		976,800	6.56
Process water	0.12/kgal												
Annual quantity, kgal			-	-	-	232,600	-	-	-	-	232,600		
Annual cost, $			-	-	-	27,900	-	-	-	-		27,900	0.19
Electricity	0.029/kWh												
Annual quantity, kWh			825,700	582,000	26,099,500	18,739,000	-	161,800	600,000	-	47,008,000		
Annual cost, $			23,900	16,900	756,900	543,400	-	4,700	17,400	-		1,363,200	9.16
Maintenance (labor and material)													
Annual cost, $			158,200	52,800	345,400	680,300	102,600	129,300	88,100	135,200		1,691,900	11.36
Analyses	17.00/man-hr												
Annual quantity, man-hr		1,500	-	-	1,880	-	380	-	-	-			
Annual cost, $		25,500	-	-	32,000	-	6,400	-	-	-		63,900	0.43
Subtotal conversion costs		25,500	234,600	152,200	1,155,400	1,357,800	1,104,600	177,800	105,500	135,200		4,448,600	29.88
Total direct costs		2,906,700	234,600	152,200	1,155,400	1,357,800	1,104,600	177,800	105,500	135,200		7,329,800	49.23
Percent of total direct costs		39.66	3.20	2.08	15.76	18.52	15.07	2.43	1.44	1.84			

TABLE 45. LIME SLURRY PROCESS WITH ONSITE CALCINATION

ANNUAL REVENUE REQUIREMENTS DIRECT COSTS

	Total		Materials handling	Limestone calcination	Feed preparation	Gas handling	SO_2 absorption	Stack gas reheat	Solids disposal	Services, utilities, and miscellaneous	Pond construction	Total annual quantities	Total annual dollars	% of annual revenue requirements
Total direct investment, $	28,465,000		2,570,000	3,654,000	660,000	4,318,000	8,504,000	1,282,000	1,616,000	1,356,000	4,505,000		28,465,000	
Total depreciable investment, $	51,821,000													
Total capital investment, $	53,860,000													
Direct Costs	Unit cost, $	Raw material												
Delivered raw materials														
Limestone	7.00/ton													
Annual quantity, tons		129,400										129,400		
Annual cost, $		905,800											905,800	5.82
Coal	25.00/ton													
Annual quantity, tons,		19,630										19,630		
Annual cost, $		490,800											490,800	3.16
Subtotal raw materials cost		1,396,600											1,396,600	8.98
Conversion costs														
Operating labor and supervision	12.50/man-hr													
Annual quantity, man-hr			4,200	11,680	6,600	1,690	8,500	1,500	3,500	-	-	37,670		
Annual cost, $			52,500	146,000	82,500	21,100	106,200	18,800	43,800	-	-		470,900	3.03
Utilities														
Steam	2.00/MBtu													
Annual quantity, MBtu			-	-	-	-	-	488,400	-	-	-	488,400		
Annual cost, $			-	-	-	-	-	976,800	-	-	-		976,800	6.28
Process water	0.12/kgal													
Annual quantity, kgal			-	-	-	-	235,600	-	-	-	-	235,600		
Annual cost, $			-	-	-	-	28,300	-	-	-	-		28,300	0.18
Electricity	0.029/kWh													
Annual quantity, kWh			1,093,600	4,948,900	582,000	26,099,500	18,739,000	-	161,800	600,000	-	52,224,800		
Annual cost, $			31,700	143,500	16,900	756,900	543,400	-	4,700	17,400	-		1,514,500	9.73
Heat credit														
Annual quantity, MBtu			-	25,100	-	-	-	-	-	-	-	25,100		
Annual credit, $			-	(50,200)	-	-	-	-	-	-	-		(50,200)	(0.32)
Maintenance (labor and material)														
Annual cost, $			205,600	292,300	52,800	345,400	680,300	102,600	129,300	108,500	135,200		2,052,000	13.19
Analyses														
Annual quantity, man-hr		1,500	1,500	940	-	1,880	-	380	-	-	-	4,700		
Annual cost, $		25,500	25,500	16,000	-	32,000	-	6,400	-	-	-		79,900	0.51
Subtotal conversion costs		25,500	289,800	547,600	152,200	1,155,400	1,358,200	1,104,600	177,800	125,900	135,200		5,072,200	32.60
Total direct costs		1,422,100	289,800	547,600	152,200	1,155,400	1,358,200	1,104,600	177,800	125,900	135,200		6,468,800	41.58
Percent of total direct costs		21.98	4.48	8.46	2.35	17.86	21.00	17.08	2.75	1.95	2.09			

TABLE 46. MAGNESIA PROCESS BASE CASE

ANNUAL REVENUE REQUIREMENTS DIRECT COSTS

	Total		Materials handling	Feed preparation	Gas handling	SO_2 absorption	Stack gas reheat	Chloride purge	Slurry processing
Total direct investment, $	35,354,000		704,000	303,000	4,625,000	5,447,000	1,198,000	5,066,000	1,110,000
Total depreciable investment, $	64,365,000								
Total capital investment, $	65,911,000								
	Unit cost, $	Raw material							
Direct Costs									
Delivered raw materials									
MgO	300.00/ton								
Annual quantity, tons		1,470							
Annual cost, $		441,000							
Catalyst									
Annual quantity, liters	2.50/liter	1,800							
Annual cost, $		4,500							
Agricultural limestone	15.00/ton								
Annual quantity, tons		3,240							
Annual cost, $		48,600							
Subtotal raw materials cost		494,100							
Conversion costs									
Operating labor and supervision	12.50/man-hr								
Annual quantity, man-hr			1,750	4,510	970	5,390	970	5,390	4,510
Annual cost, $			21,900	56,400	12,100	67,400	12,100	67,400	56,400
Utilities									
Fuel oil	0.40/gal								
Annual quantity, gal			-	-	-	-	-	-	-
Annual cost, $			-	-	-	-	-	-	-
Steam	2.00/MBtu								
Annual quantity, MBtu			-	-	-	-	499,000	-	-
Annual cost, $			-	-	-	-	998,000	-	-
Process water	0.12/kgal								
Annual quantity, kgal			-	7,200	-	24,800	-	163,000	-
Annual cost, $			-	900	-	3,000	-	19,600	-
Electricity	0.029/kWh								
Annual quantity, kWh			981,000	313,000	31,320,000	5,272,000	-	7,716,000	3,560,000
Annual cost, $			28,400	9,100	908,300	152,900	-	223,800	103,200
Heat credit	2.00/MBtu								
Annual quantity, MBtu			-	-	-	-	-	-	-
Annual credit, $			-	-	-	-	-	-	-
Maintenance (labor and material)									
Annual cost, $			49,300	21,200	322,800	380,300	82,900	353,600	77,700
Analyses	17.00/man-hr								
Annual quantity, man-hr		425	-	-	-	1,140	-	760	435
Annual cost, $		7,200	-	-	-	19,400	-	12,900	7,400
Subtotal conversion costs		7,200	99,600	87,600	1,243,200	623,000	1,093,000	677,300	244,700
Total direct costs		501,300	99,600	87,600	1,243,200	623,000	1,093,000	677,300	244,700
Percent of total direct costs		5.55	1.10	0.97	13.78	6.90	12.11	7.50	2.71

(continued)

TABLE 46 (continued)

	Drying	Calcining	Acid production	Acid storage	Services, utilities, and miscellaneous	Pond construction	Total annual quantity	Total annual dollars	% of annual revenue requirements
Total direct investment, $	5,518,000	2,243,000	6,000,000	994,000	1,992,000	154,000		35,354,000	
Total depreciable investment, $									
Total capital investment, $									
Direct Costs									
Delivered raw materials									
MgO									
Annual quantity, tons							1,470		
Annual cost, $								441,000	2.48
Catalyst									
Annual quantity, liters							1,800		
Annual cost, $								4,500	0.03
Agricultural limestone									
Annual quantity, tons							3,240		
Annual cost, $								48,600	0.27
Subtotal raw materials cost								494,100	2.78
Conversion costs									
Operating labor and supervision									
Annual quantity, man-hr	4,650	4,650	11,730	2,980	-	-	47,500		
Annual cost, $	58,100	58,100	146,600	37,300	-	-		593,800	3.34
Utilities									
Fuel oil									
Annual quantity, gal	4,608,000	1,678,000	-	-	-	-	6,286,000		
Annual cost, $	1,843,100	671,200	-	-	-	-		2,514,300	14.13
Steam									
Annual quantity, MBtu	4,400	-	-	-	-	-	503,400		
Annual cost, $	8,800	-	-	-	-	-		1,006,800	5.66
Process water									
Annual quantity, kgal	-	12,200	2,152,000	-	-	-	2,359,200		
Annual cost, $	-	1,500	258,100	-	-	-		283,100	1.59
Electricity									
Annual quantity, kWh	3,701,000	1,425,000	6,655,000	209,000	600,000	-	61,752,000		
Annual cost, $	107,300	41,300	193,000	6,100	17,400	-		1,790,800	10.07
Heat credit									
Annual quantity, MBtu	-	135,600	-	-	-	-	135,600		
Annual credit, $	-	(271,200)	-	-	-	-		(271,200)	(1.52)
Maintenance (labor and material)									
Annual cost, $	385,300	156,000	417,900	68,600	148,400	4,600		2,468,600	13.88
Analyses									
Annual quantity, man-hr	1,275	1,275	2,550	640	-	-	8,500		
Annual cost, $	21,700	21,700	43,300	10,900	-	-		144,500	0.81
Subtotal conversion costs	2,424,300	678,600	1,058,900	122,900	165,800	4,600		8,530,700	47.96
Total direct costs	2,424,300	678,600	1,058,900	122,900	165,800	4,600		9,024,800	50.74
Percent of total direct costs	26.86	7.52	11.73	1.36	1.84	0.05			

Utility costs for the two lime slurry variations do not differ greatly. Calcination fuel is classified as a raw material and a heat credit from the calcination plant partially offsets the higher electricity cost.

The lime slurry process with onsite calcination has lower raw material costs (0.40 mill/kWh) than the lime slurry process using purchased lime. The higher operating labor and maintenance conversion costs and higher indirect costs arising from the calcination plant more than offset the lower raw material costs.

The magnesia process has the lowest raw material costs (0.14 mill/kWh); however, utility costs (1.52 mills/kWh), including a reduction for a heat credit, are double those for the waste-producing processes. Fuel oil cost (0.72 mill/kWh) is the largest element in the magnesia process utility costs. Utility costs and the higher indirect costs resulting from the higher capital investment are the major differences between the magnesia process and the waste-producing processes. Byproduct acid sales result in a net credit (sales less 10% marketing) of 0.69 mill/kWh, a reduction of 15% in the gross revenue requirements.

Case Variations

The effects of power plant size and coal sulfur contents on annual revenue requirements are shown in Figures 27-29. The magnesia process costs include the credit for acid sales.

The costs for each process show similar behavior. The lime slurry process and limestone slurry process costs diverge as power plant size and coal sulfur content increase, however. Much of this is due to the large cost differences between lime and limestone. The raw material costs are a higher percentage of total annual revenue requirements for the lime process than for the limestone or magnesia processes. Therefore, it benefits less from the capital investment (fixed cost) scale economies as the power plant size increases. The magnesia process, which requires little raw material, and the lime slurry process with onsite calcination, which uses limestone, increase at about the same rate as the limestone slurry process from 200 MW to 1,000 MW. The lime slurry process revenue requirements increase an average of 31% more than the other three processes over the same range of power unit sizes.

The revenue requirements of the limestone and lime slurry processes become equal slightly below the 200-MW power unit size and at about 1.5% sulfur coal. Thus, the lime slurry process using purchased lime appears to be more economical than the limestone slurry process for situations in which raw material consumption is low (small power units or low-sulfur coal). The limestone slurry process becomes increasingly more economical, compared with the lime slurry process, as power unit size or coal sulfur content increases.

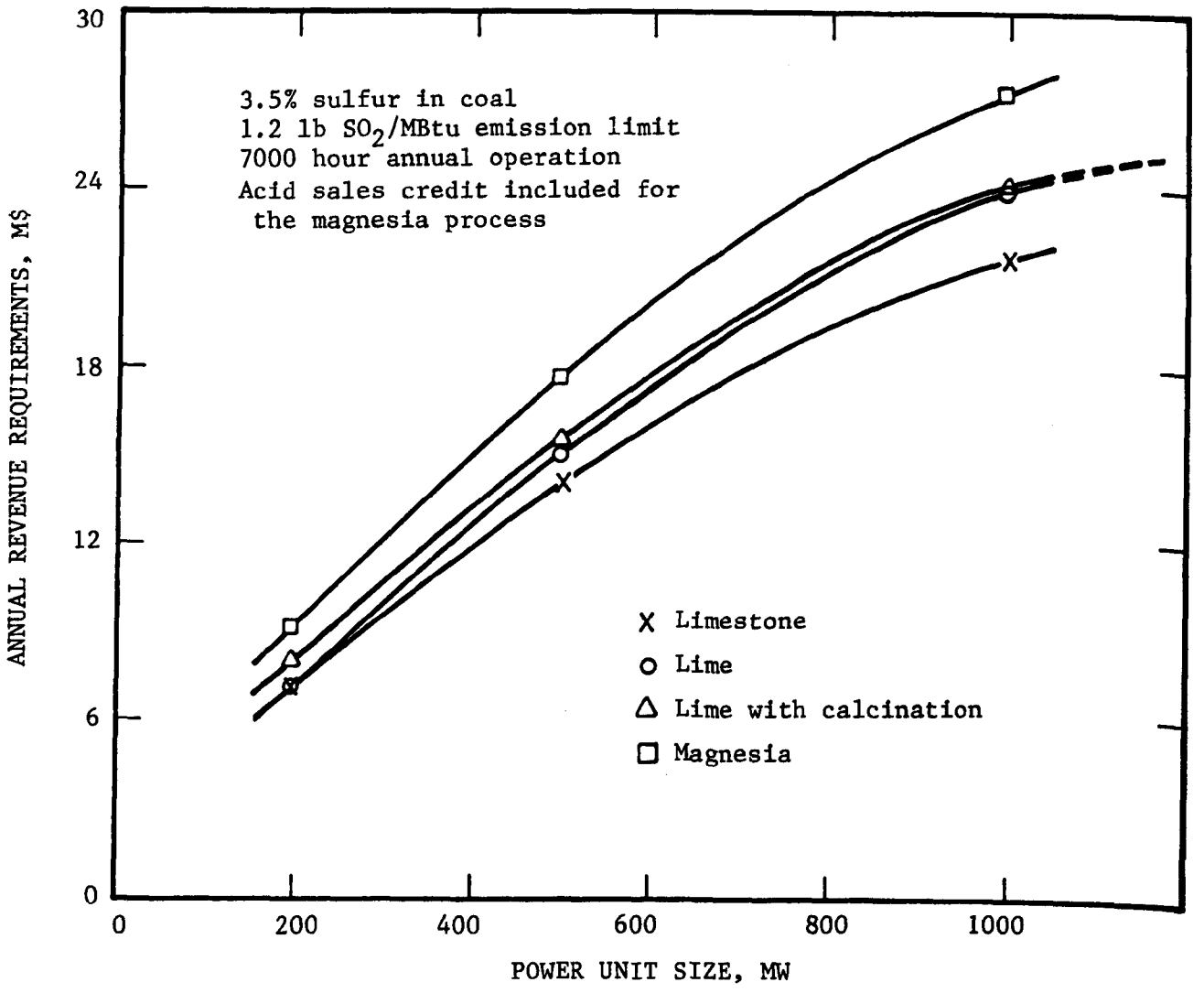

Figure 27. All processes. Effect of power unit size on annual revenue requirements: new coal-fired units.

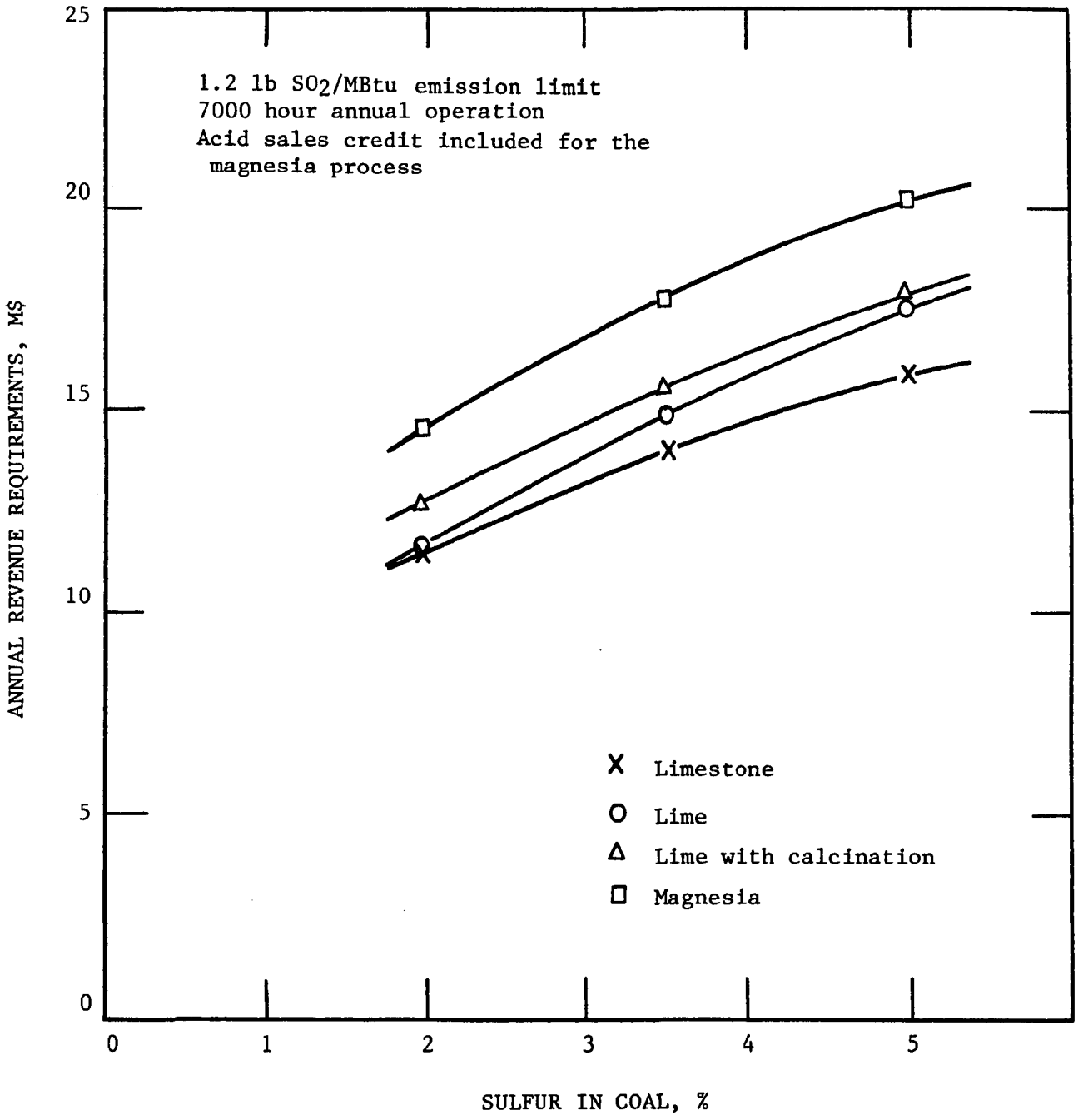

Figure 28. All processes. Effect of sulfur content of coal on annual revenue requirements: new 500-MW coal-fired units.

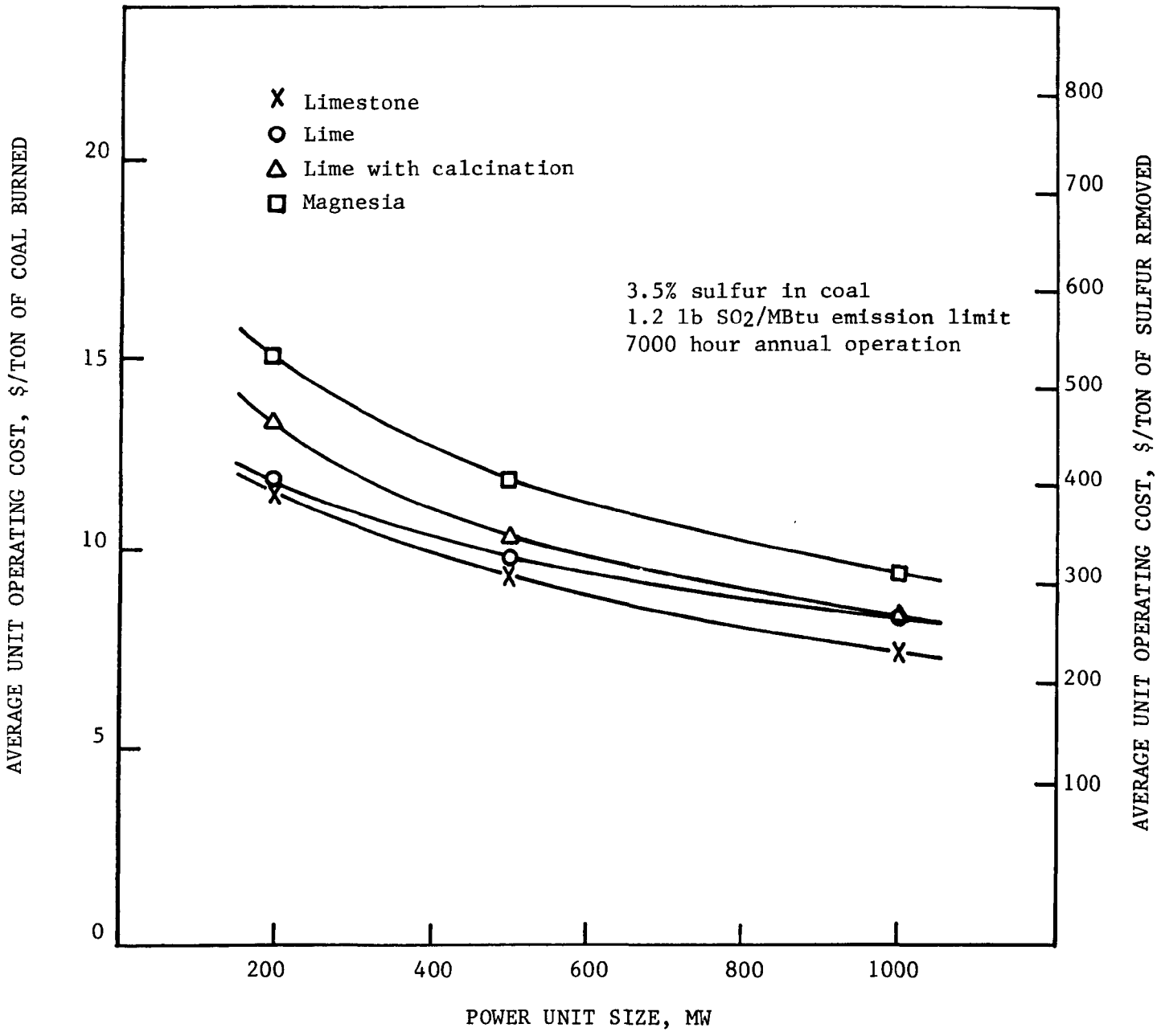

Figure 29. All processes. Effect of power unit size on average unit operating cost, $/ton of coal burned: new 500-MW coal-fired units.

As coal sulfur content increases from 2% to 5% the percent increase in revenue requirements for the limestone slurry process is 136%, followed by the lime slurry process with onsite calcination with 142%, and the lime slurry process with 148%. The magnesia process has the largest increase of 154%.

These curves also show that the lime slurry process and the lime slurry process with onsite calcination annual revenue requirements approach each other as the size of the power units and coal sulfur content increase. Extrapolation of the curves shows that the revenue requirements become equal at about 1,150 MW for 3.5% sulfur coal. For existing units the curves meet at about 1,050 MW. These are the points at which the calcination area becomes economical and can produce lime at a cost equal to the purchased lime cost. For units burning higher sulfur coal this occurs at a lower power unit size. For instance, for units burning 5% sulfur coal, onsite calcination becomes more economical than purchased lime above about 750 MW.

Another factor that has a large influence on annual revenue requirements is a large total capital investment. The limestone, lime, and lime-with-onsite calcination processes have base-case total capital investment ranging from $45,319,000 for the lime slurry process to $53,860,000 for the lime slurry process with onsite calcination process. This results in corresponding capital charges of $6,485,000 for the lime slurry process and $7,741,200 for the lime slurry process with onsite calcination. The magnesia process base-case capital investment is $65,894,000 which results in $9,528,800 in capital charges. This is an average of 35% more than the capital charges for the waste-producing processes.

Variations in Economic Factors

Costs and charge rates were varied from the base-case values to determine the effect of changes in economic factors on total costs. The factors evaluated and the ranges of variation are listed in Table 47. Each range corresponds to differences in design or cost which might be encountered in site-specific applications. Limestone prices, for example, represent the effect of plant location. Operating labor cost might also be affected by plant location.

The sensitivities of the limestone slurry process and the lime slurry process costs to raw material cost variations are generally the same for all three processes and for both power plant size and coal sulfur variations.

The typical effect of different operating labor costs at different power unit sizes on annual revenue requirements for the four processes is shown for the limestone slurry and lime slurry processes in Figures 30 and 31, respectively. Figure 32 shows how operating labor cost affects the annual revenue requirements for new 500-MW units burning coal with different sulfur concentrations.

TABLE 47. SENSITIVITY VARIATIONS STUDIED IN THE ECONOMIC COST PROJECTIONS

Item	Process	Power unit description[a]	Annual revenue requirements	
			Base value	Range of variations
Raw material price	Limestone	1 and 2	Limestone, $7/ton	57%-186% of base case
	Lime	1	Lime, $42/ton	83%-155% of base case
	Lime with calcination	1	Limestone, $7/ton	57%-186% of base case
Operating labor	Limestone	1 and 2	Labor, $12.50/man-hr	100%-300% of base case
	Lime	1	Labor, $12.50/man-hr	100%-300% of base case
	Magnesia	2	Labor, $12.50/man-hr	100%-300% of base case
Maintenance	Lime	1	8% of direct investment excluding pond construction plus 3% of pond construction	75%-150% of base case
	Magnesia	2		
Capital charges	Magnesia	1 and 2	Average capital charges, 6.0% of total depreciable investment plus 8.6% of total capital investment	75%-150% of base case
Product revenue	Magnesia	1 and 2	100% sulfuric acid, $25/ton	67%-160% of base case

a. Power unit description

1. New power units: 200, 500 and 1,000 MW; 3.5% sulfur in coal.
2. New power unit, 2.0%, 3.5%, and 5.0% sulfur in coal.

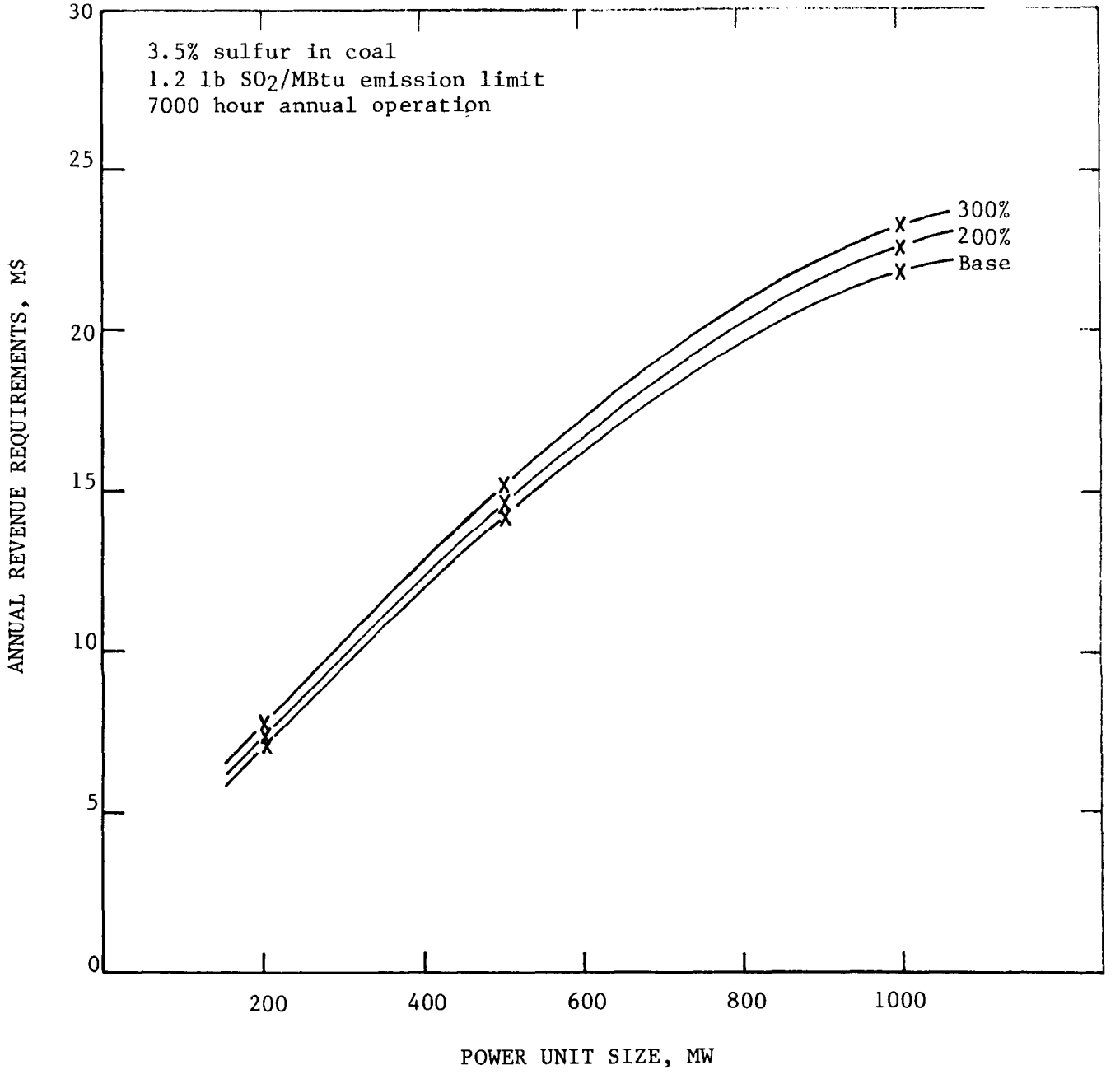

Figure 30. Limestone slurry process. Effect of power unit size and variations in operating labor cost on annual revenue requirements: new coal-fired units.

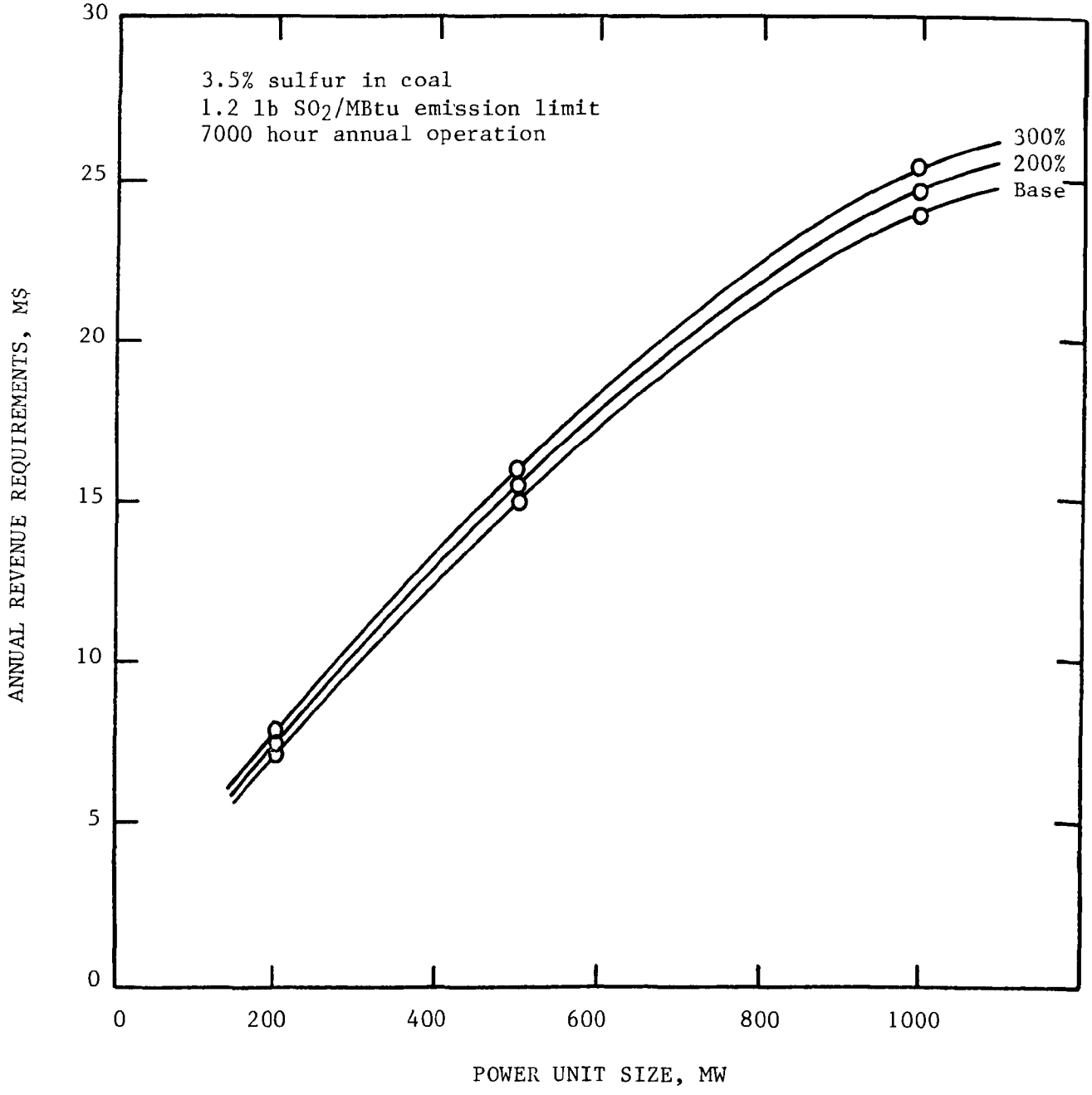

Figure 31. Lime slurry process. Effect of power unit size and variations in operating labor cost on annual revenue requirements: new coal-fired units.

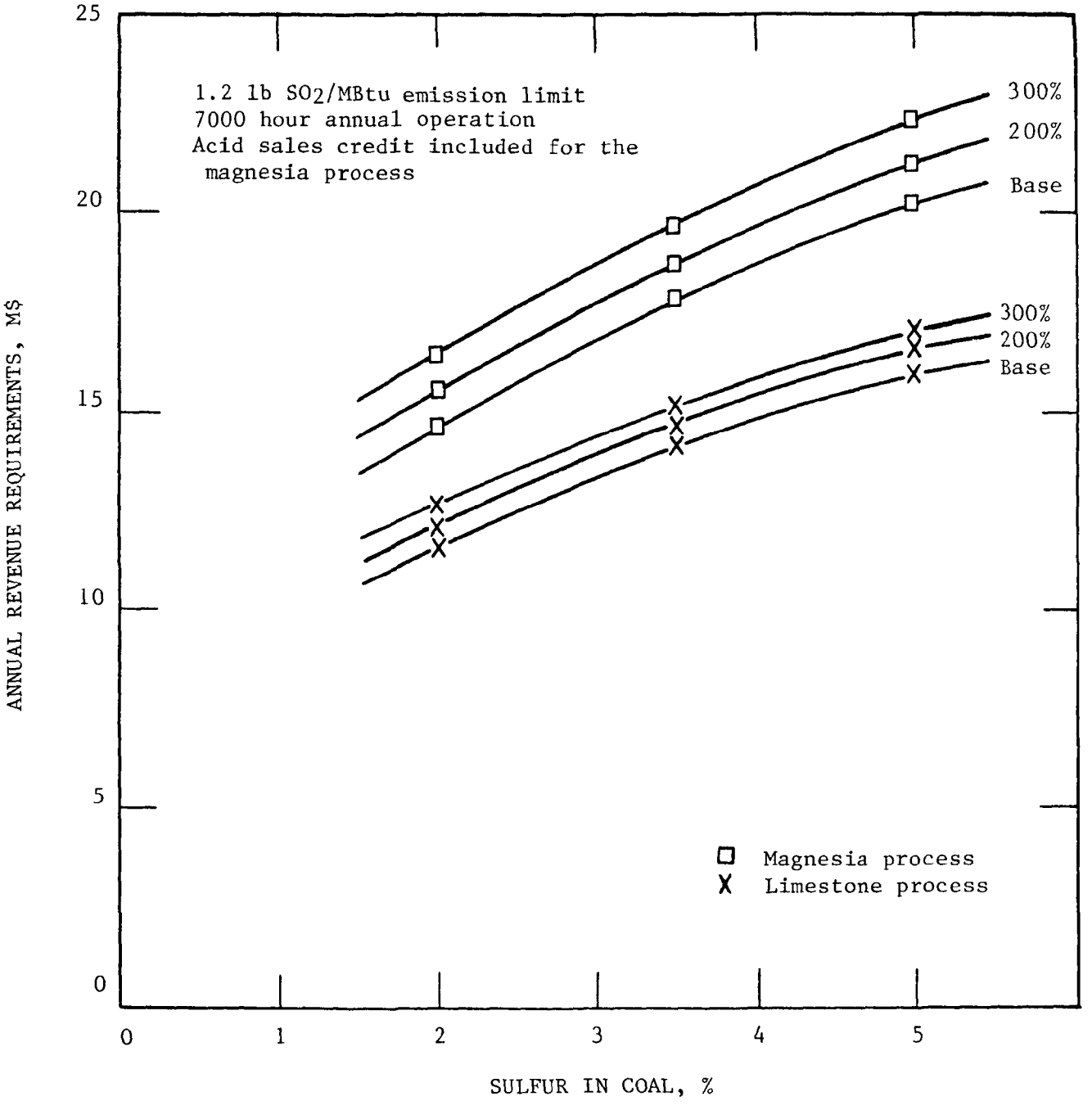

Figure 32. Magnesia and limestone processes. Effect of sulfur in coal and variations in operating labor cost on annual revenue requirements: new 500-MW units.

Figure 33 shows the effect of varying maintenance cost on annual revenue requirements for the lime slurry process with onsite calcination at different power unit sizes. Figure 34 shows the results of changes in maintenance cost for the magnesia process at various coal sulfur concentrations. The other processes have similar reactions to changes in maintenance cost shown in these figures.

Figures 35 and 36 show the effect of increased and decreased capital charges on annual revenue requirements for the magnesia process. The capital charges are dependent on both the rate and amount of the capital investment for the process. Since the magnesia process has the largest capital investment there is a larger increase in capital charges than for the waste-producing processes with lower capital investments. The relationships of the curves to each other are the same for each process as they diverge at the larger power unit size and higher sulfur coal.

The byproduct sales revenue credited to the revenue requirements reduces the annual revenue requirements between 8% for a new 500-MW unit using 2% sulfur coal and 21% for a new 500-MW unit using 5% sulfur. Figure 37 shows the effect of sulfuric acid price on annual income from sulfuric acid sales. Figure 38 illustrates how this change in byproduct sales price affects the annual revenue requirements. Figures 39 and 40 show the effect of sulfuric acid sales price on annual byproduct revenue and annual revenue requirements for new 500-MW units using coals with various sulfur contents. By increasing the sale price of sulfuric acid to $40 per ton the annual revenue requirements for the new 3.5% sulfur coal-fired units are brought into the range of the waste-producing processes. At $49 per ton for sulfuric acid, the base-case magnesia process annual revenue requirements are the same as the base-case lime slurry process with onsite calcination. For the new 1,000-MW power plants and $46 per ton for sulfuric acid, the magnesia process annual revenue requirements are about the same as those of the lime slurry processes.

The sensitivity of the limestone, lime, and lime-with-calcination processes to various raw material costs are shown in Figures 41-44. The effect of varying raw material costs on annual revenue requirements is generally the same for all three waste-producing processes. The magnesia process, however, uses such a relatively small amount of makeup MgO that there is little effect on the annual revenue requirements. Figure 42 shows the effect of limestone cost on the annual revenue requirements for the limestone and lime-with-calcination processes for different coal sulfur contents.

Lifetime Revenue Requirements

Lifetime revenue requirements for the base cases and all of the case variations are shown in the appendix. These tables provide a computer-calculated year-by-year tabulation of operating conditions and revenue requirements. The calculations are based on the design and cost

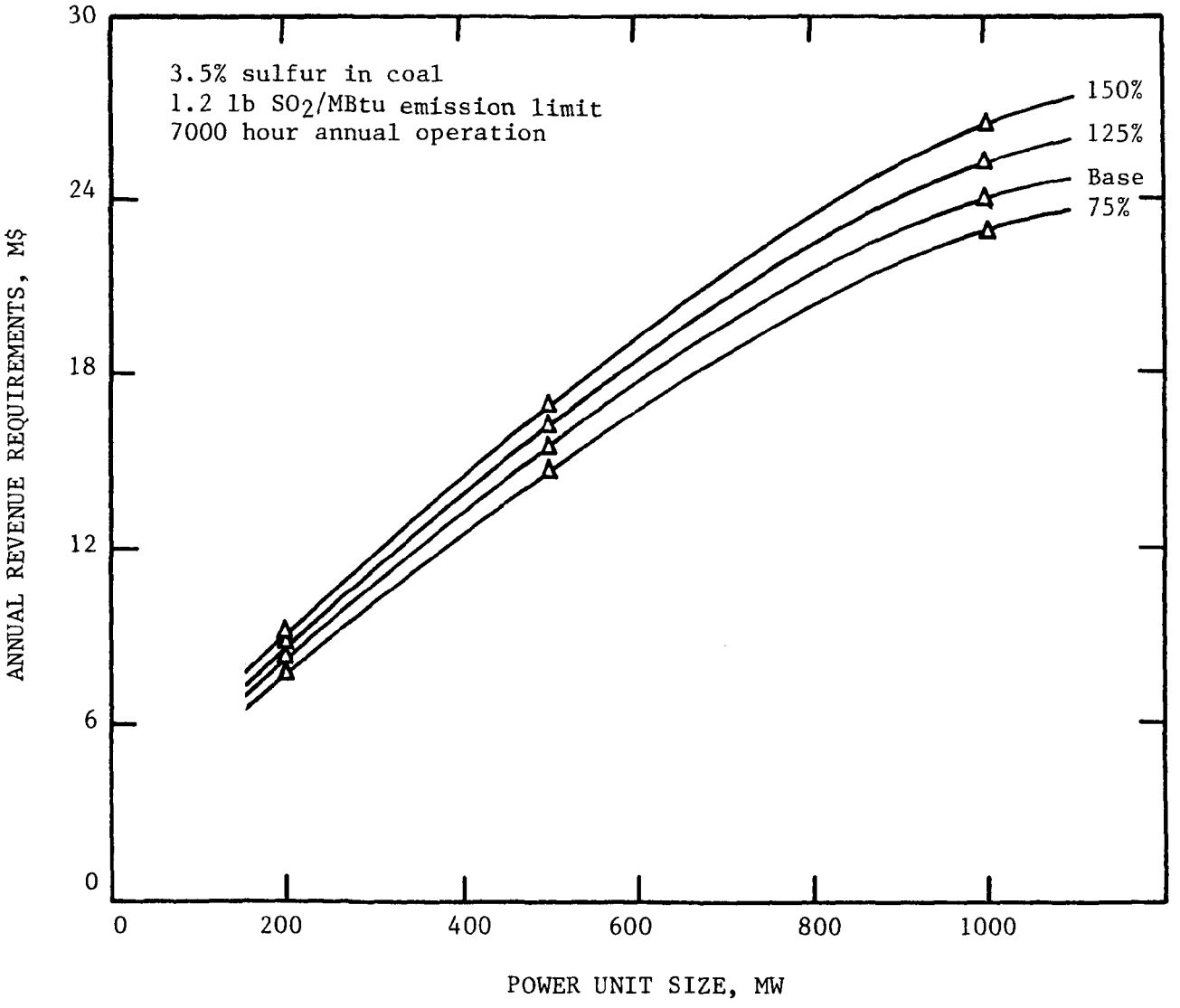

Figure 33. Lime slurry process with onsite calcination. Effect of power unit size and variations in maintenance cost on annual revenue requirements: new coal-fired units.

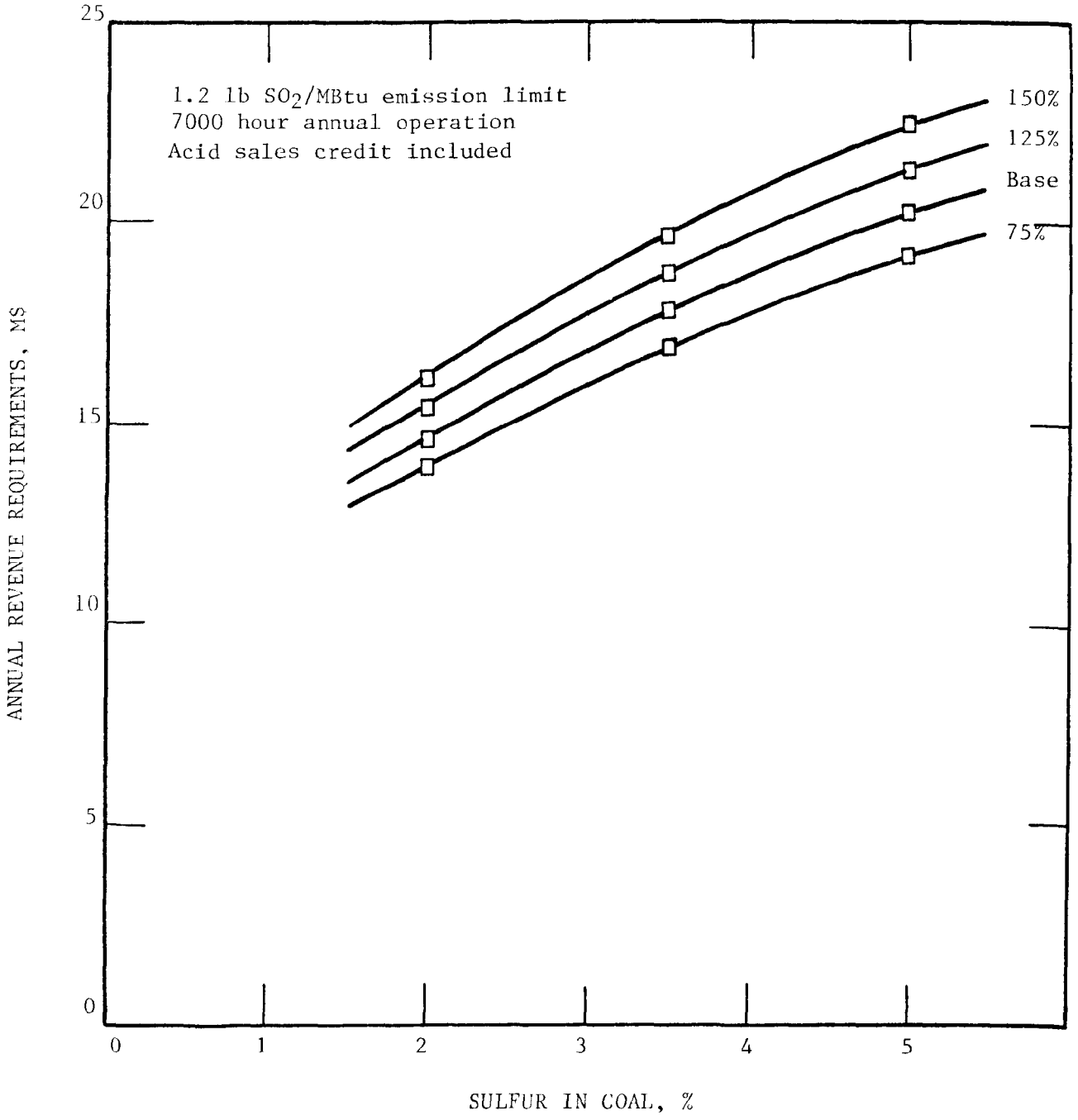

Figure 34. Magnesia process. Effect of sulfur in coal and variations in maintenance cost on annual revenue requirements: new 500-MW units.

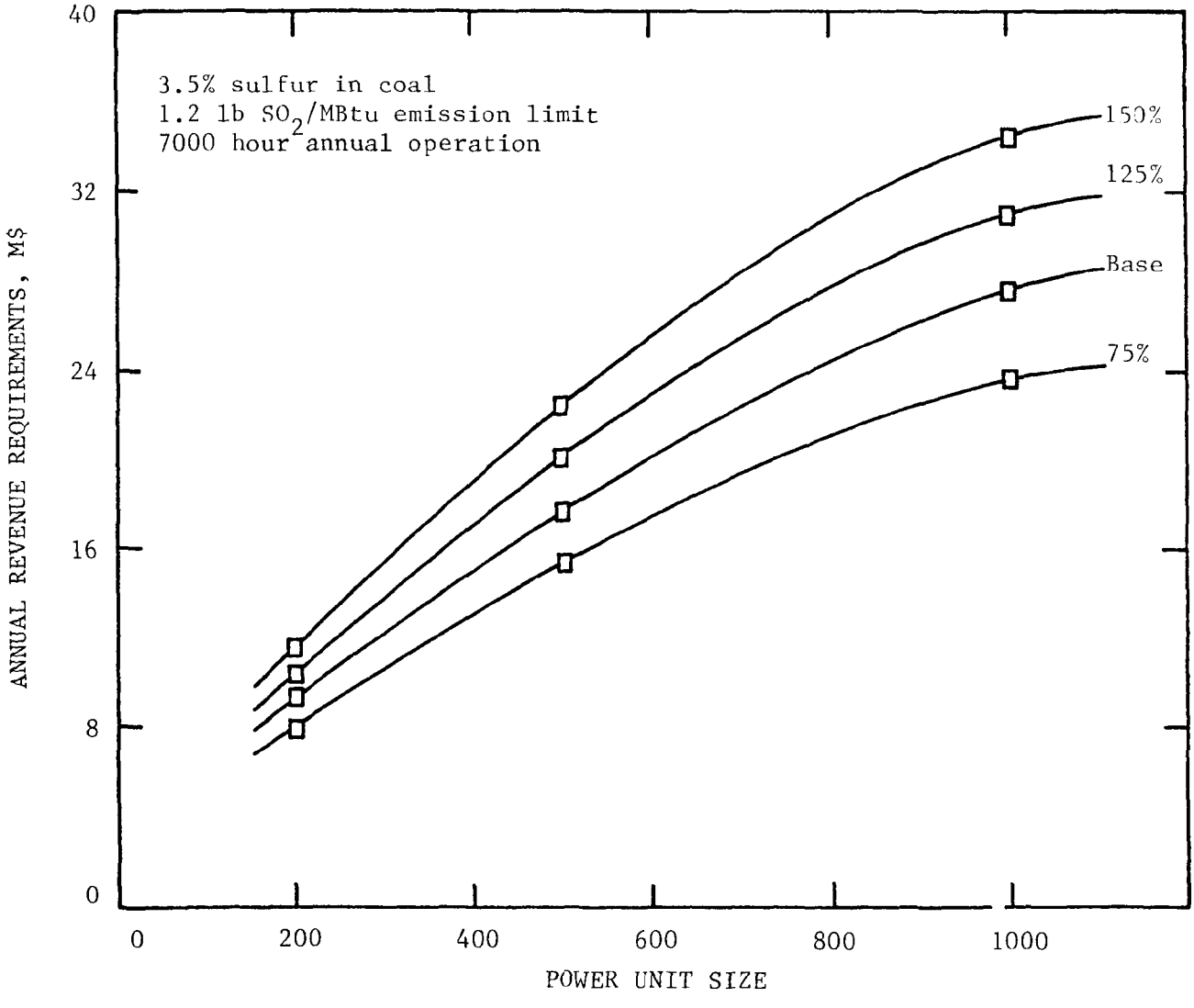

Figure 35. Magnesia process. Effect of power unit size and variations in capital charges on annual revenue requirements: new coal-fired units.

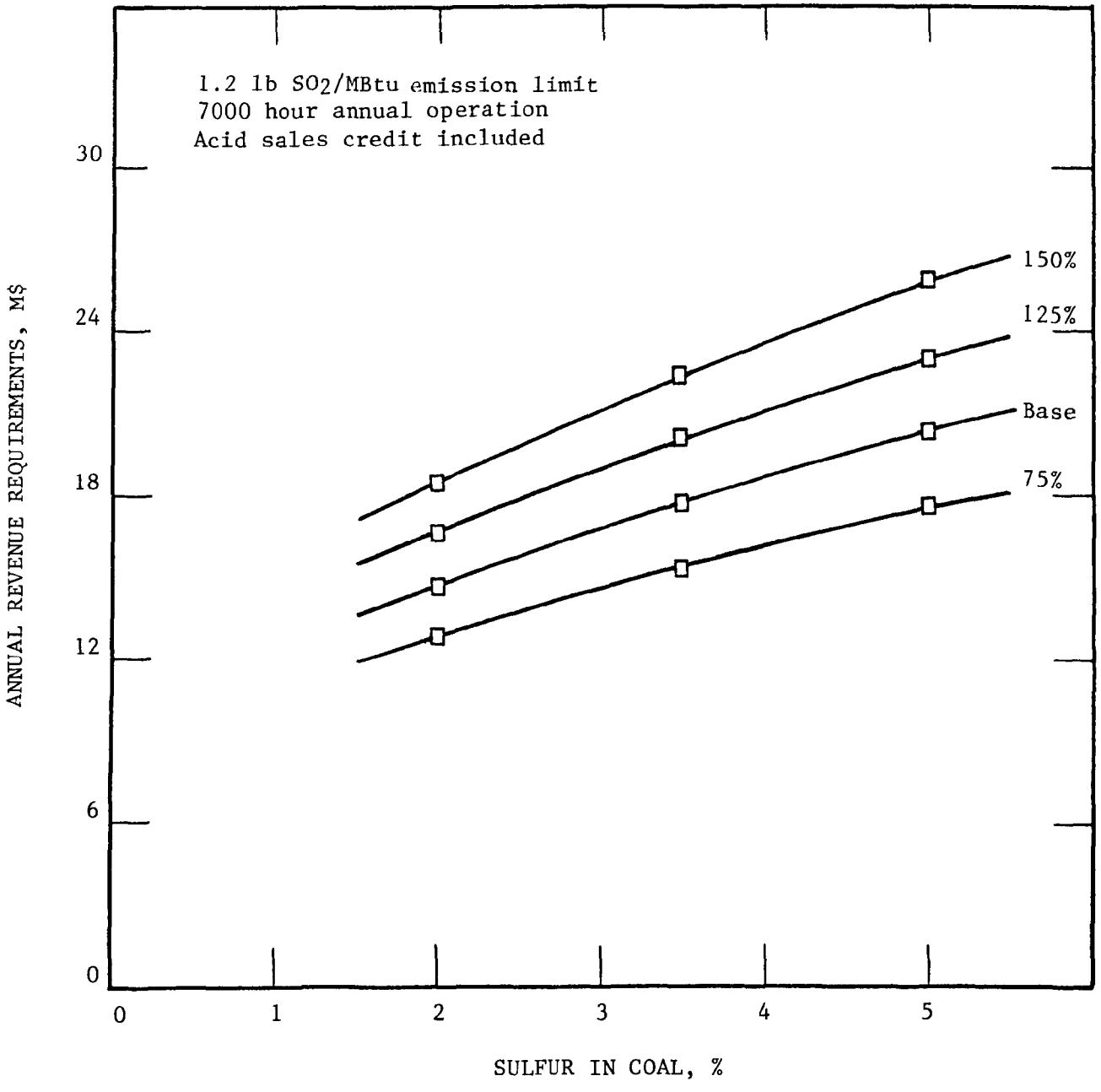

Figure 36. Magnesia process. Effect of sulfur in coal and variations in capital charges on annual revenue requirements: new 500-MW units.

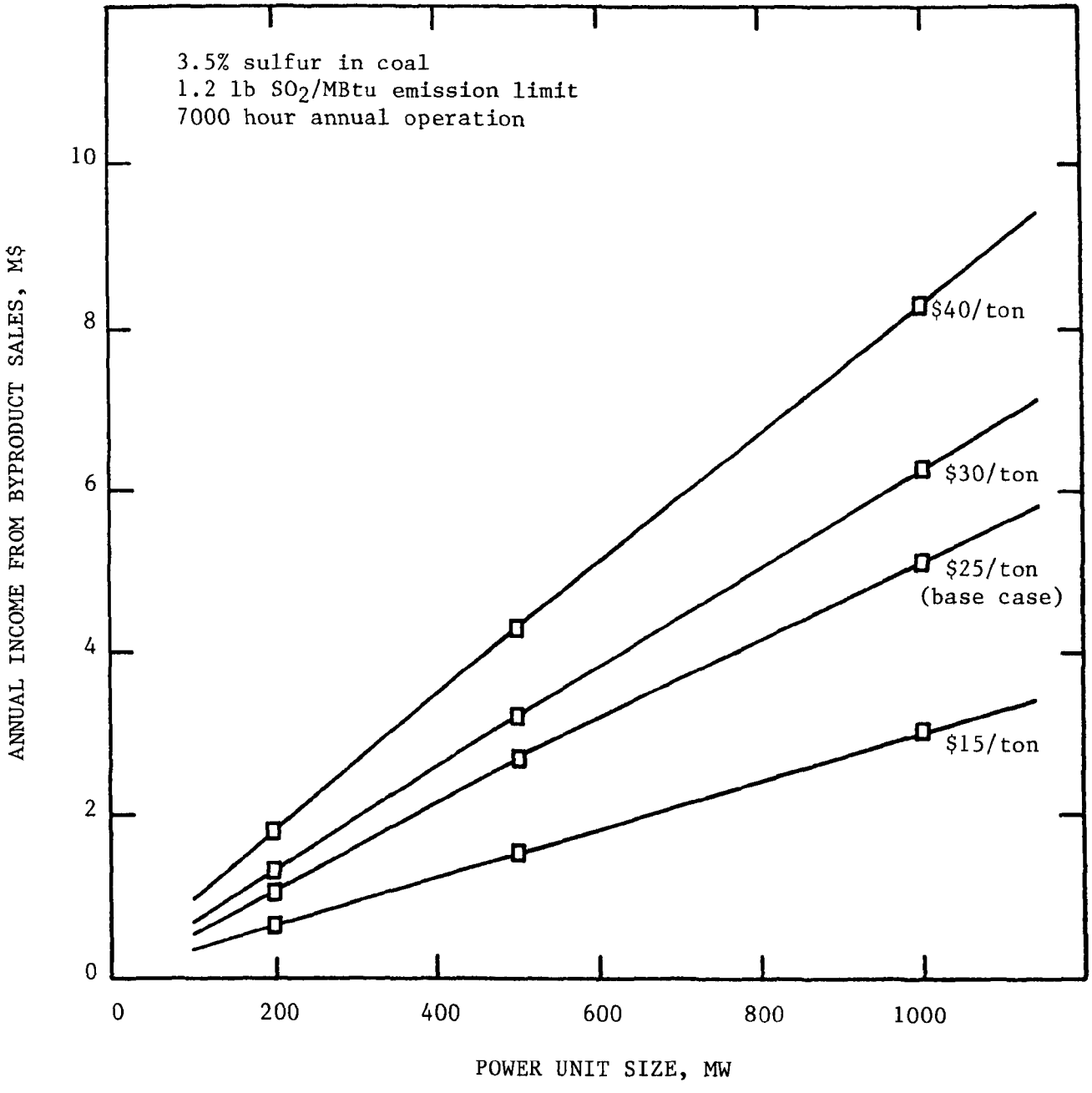

Figure 37. Magnesia process. Effect of power unit size and variations in sulfuric acid price on total annual income from byproduct sales: new coal-fired units.

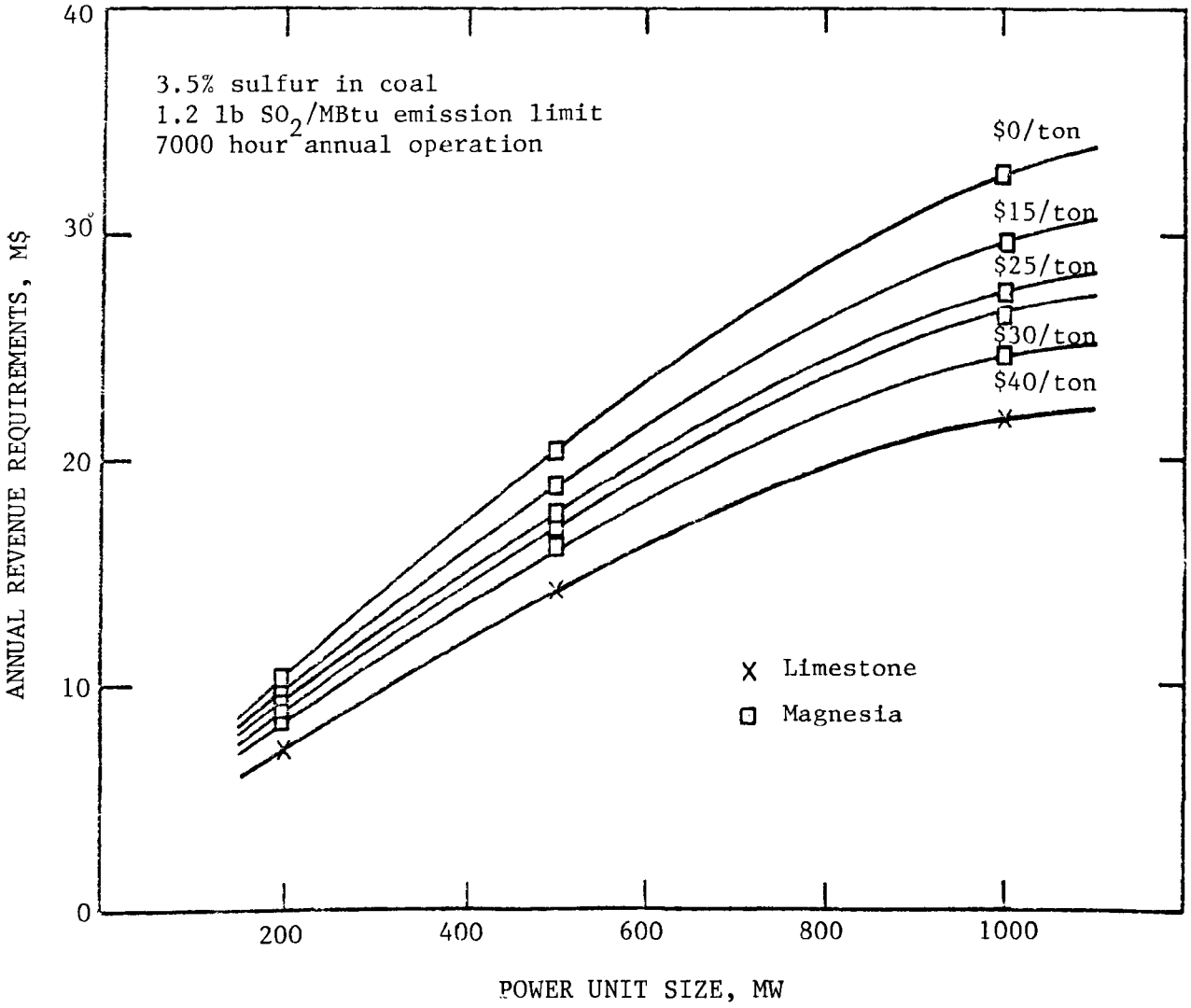

Figure 38. Magnesia process compared with limestone. Effect of power unit size and variations in sulfuric acid sale price on annual revenue requirements: new coal-fired units.

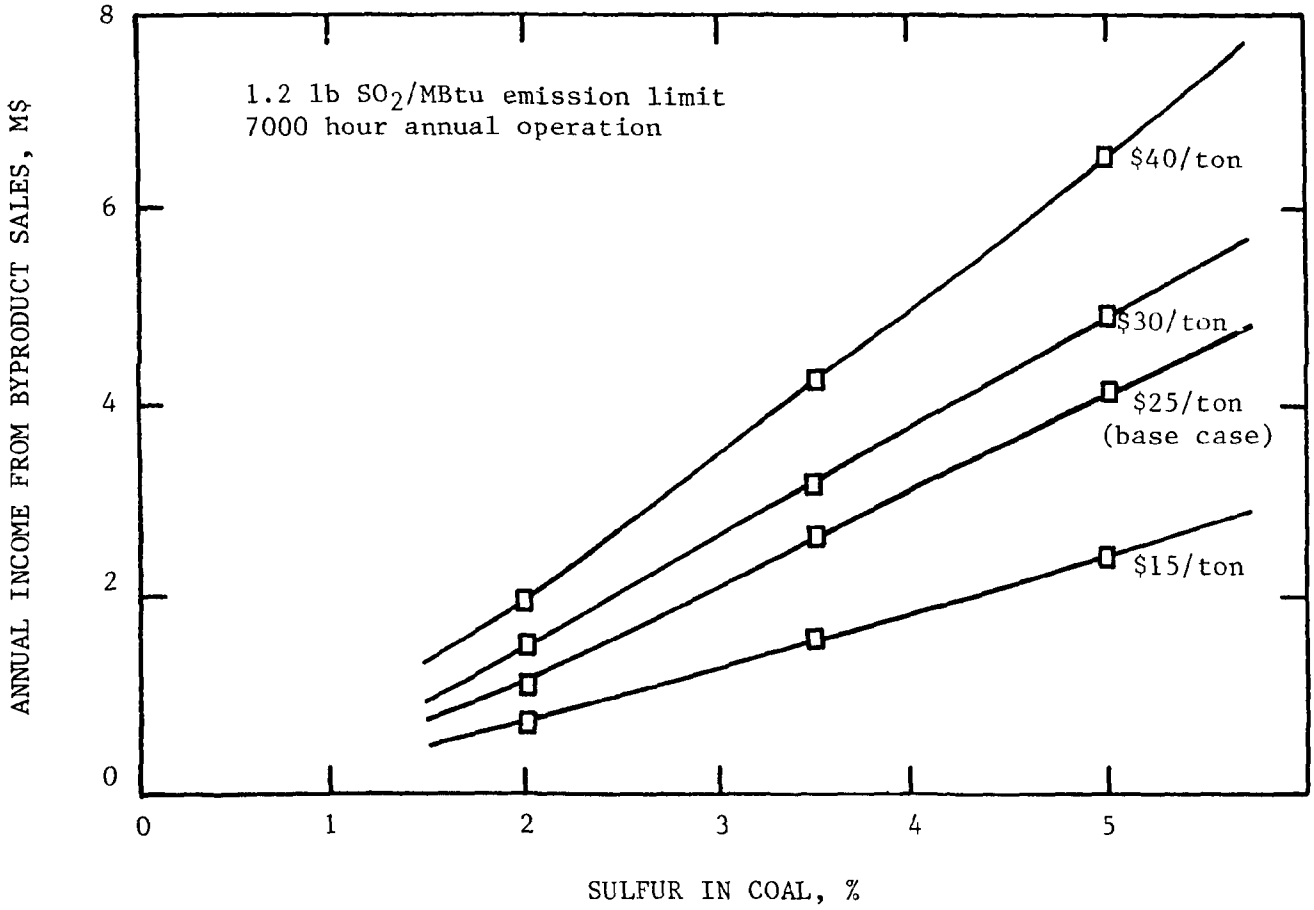

Figure 39. Magnesia process. Effect of sulfur in coal and variations in sulfuric acid price on total annual income from byproduct sales: new 500-MW units.

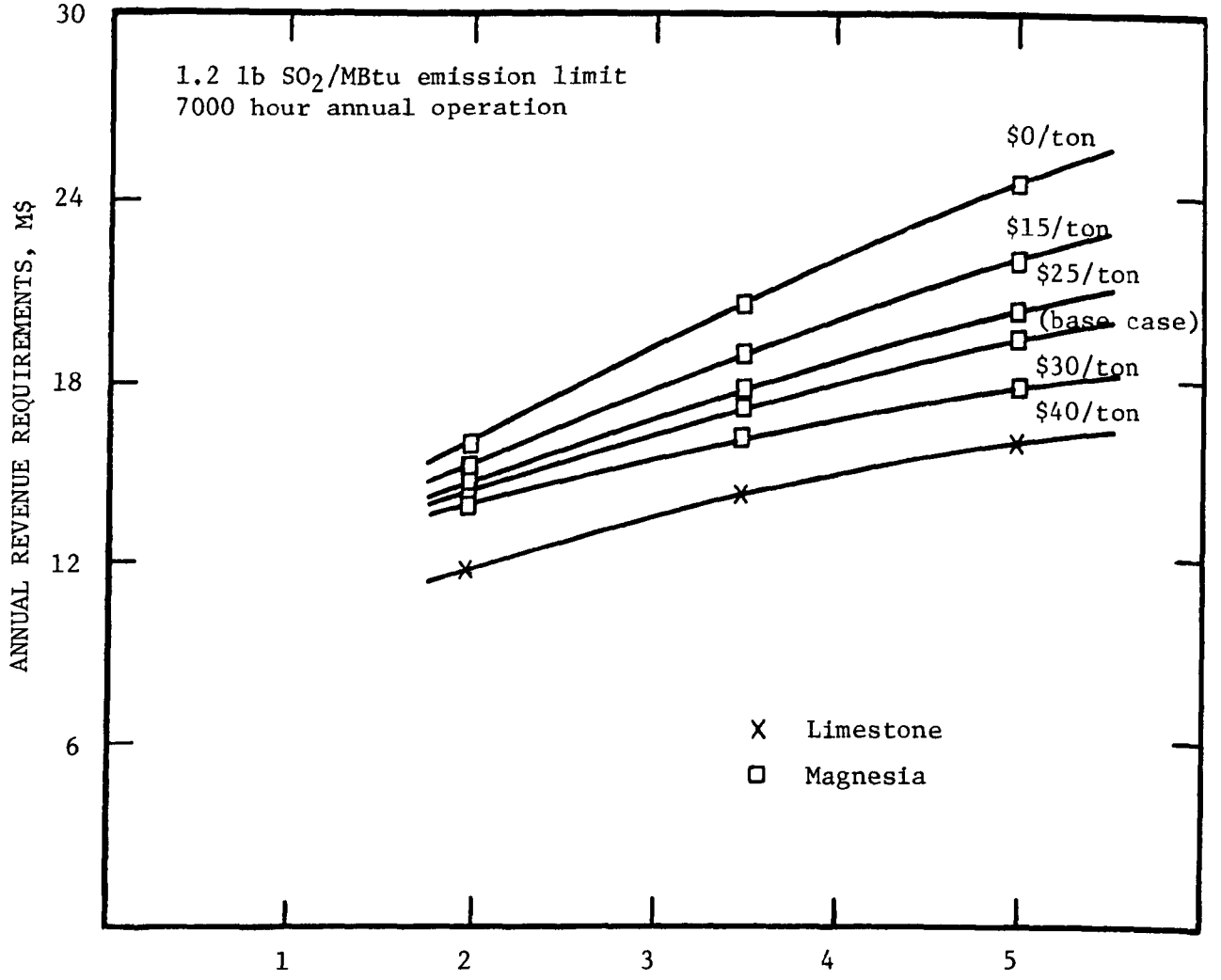

Figure 40. Magnesia process compared with limestone. Effect of sulfur in coal and variations in sulfuric acid price on annual revenue requirements: new 500-MW units.

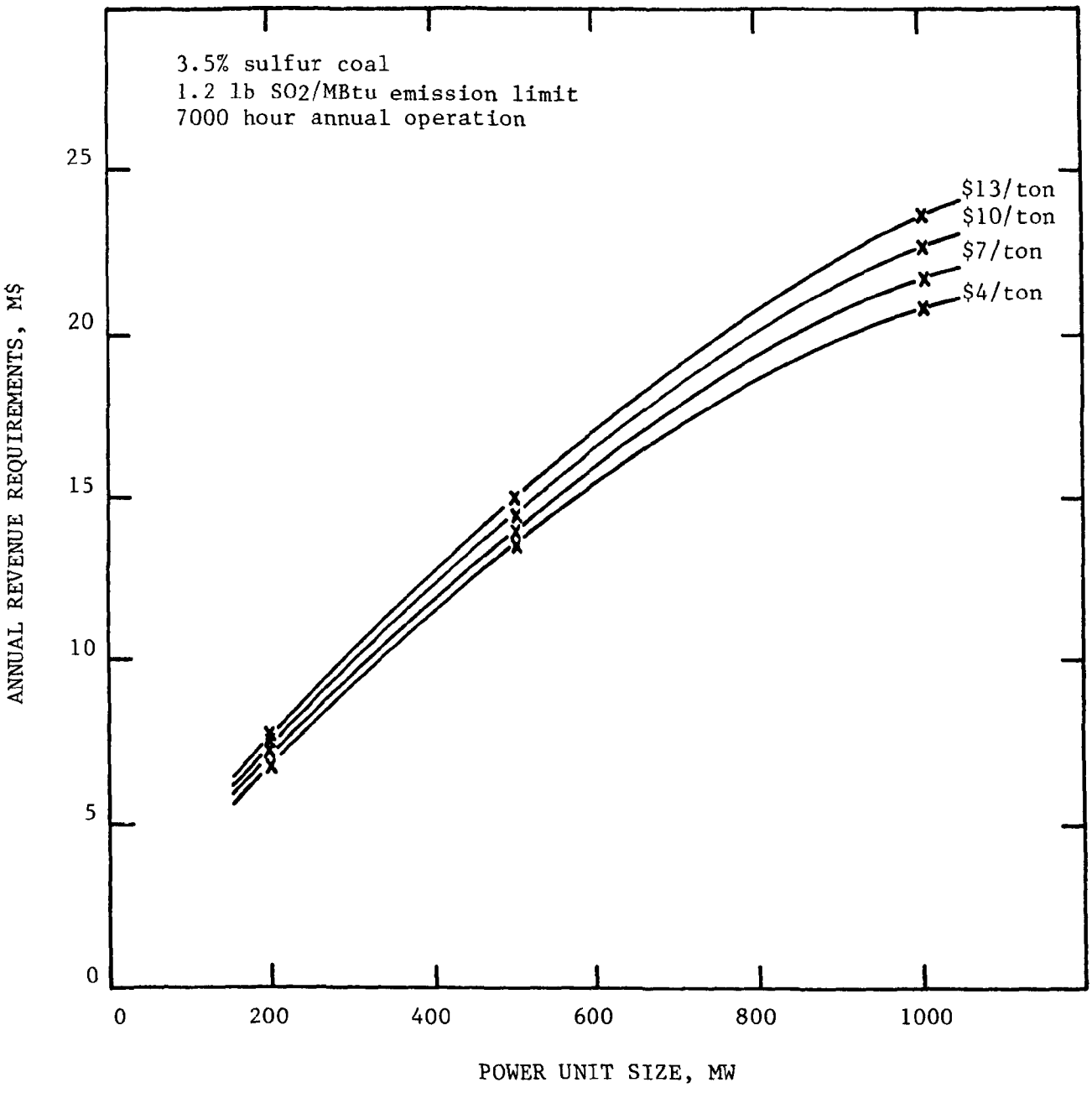

Figure 41. Limestone slurry process. Effect of power unit size and variations in limestone price on annual revenue requirements: new coal-fired units.

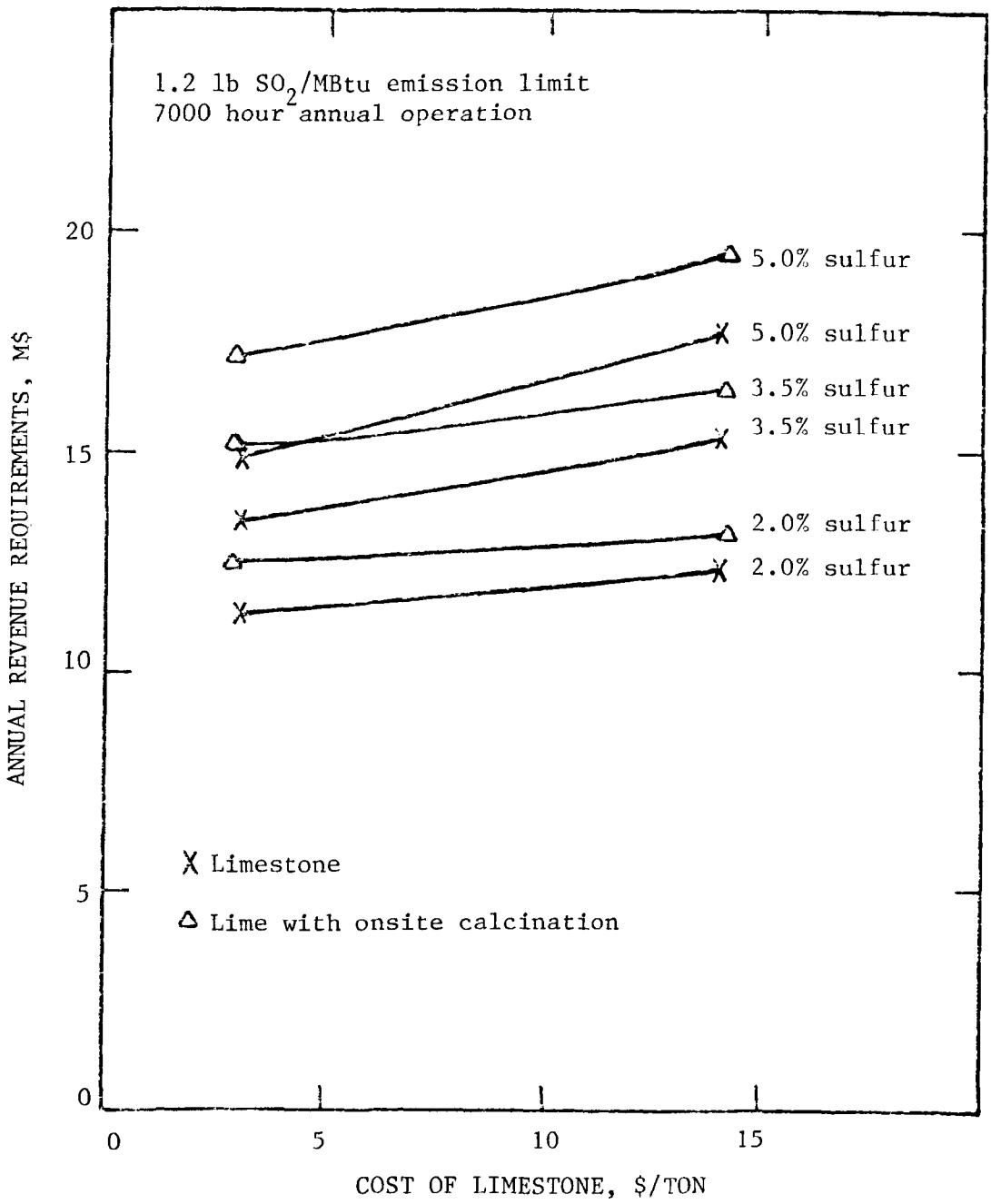

Figure 42. Lime slurry process with onsite calcination and limestone slurry process. Effect of sulfur in coal and variations in limestone price on annual revenue requirements: new 500-MW units.

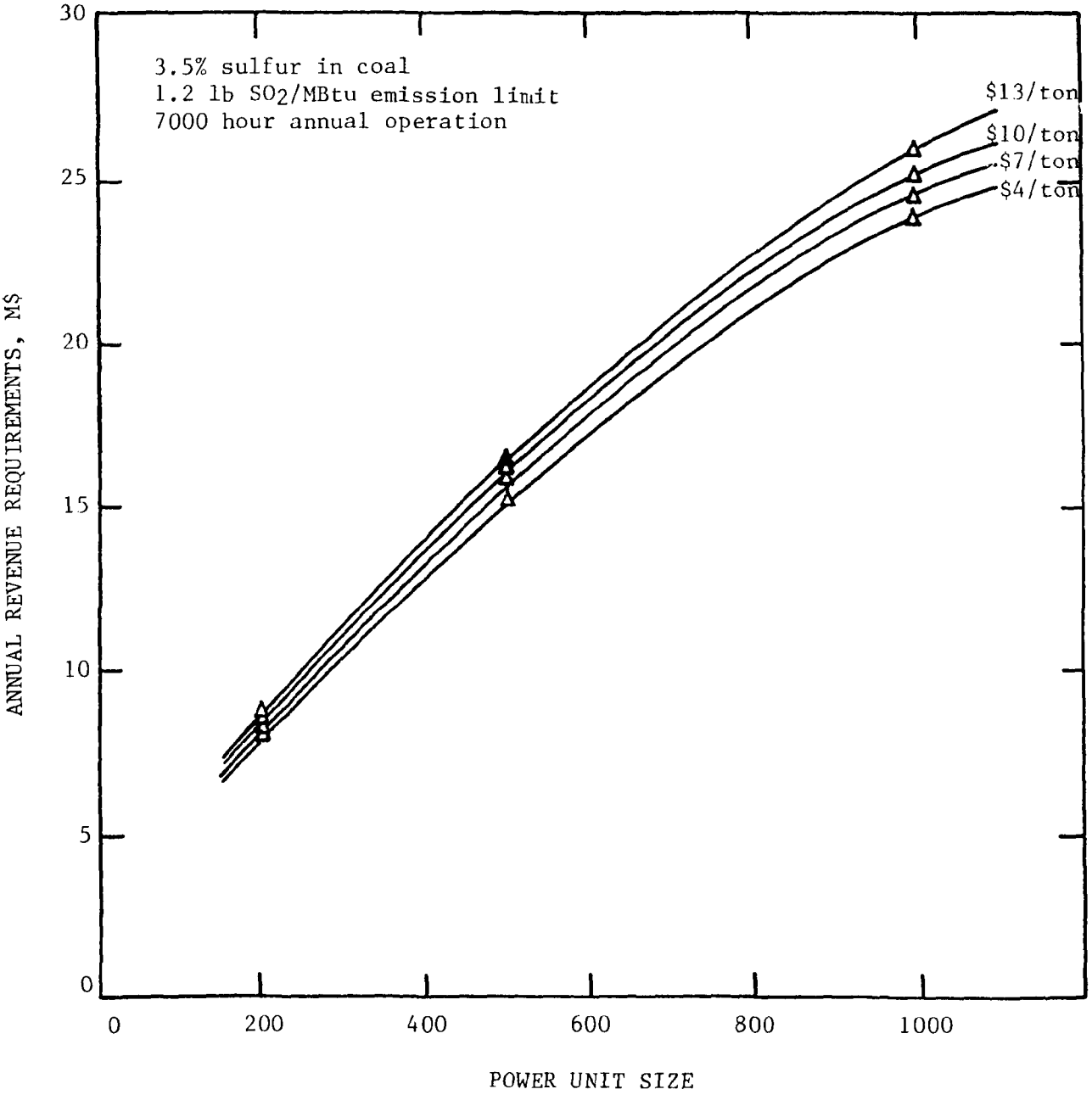

Figure 43. Lime slurry process with onsite calcination. Effect of power unit size and variations in limestone price on annual revenue requirements: new coal-fired units.

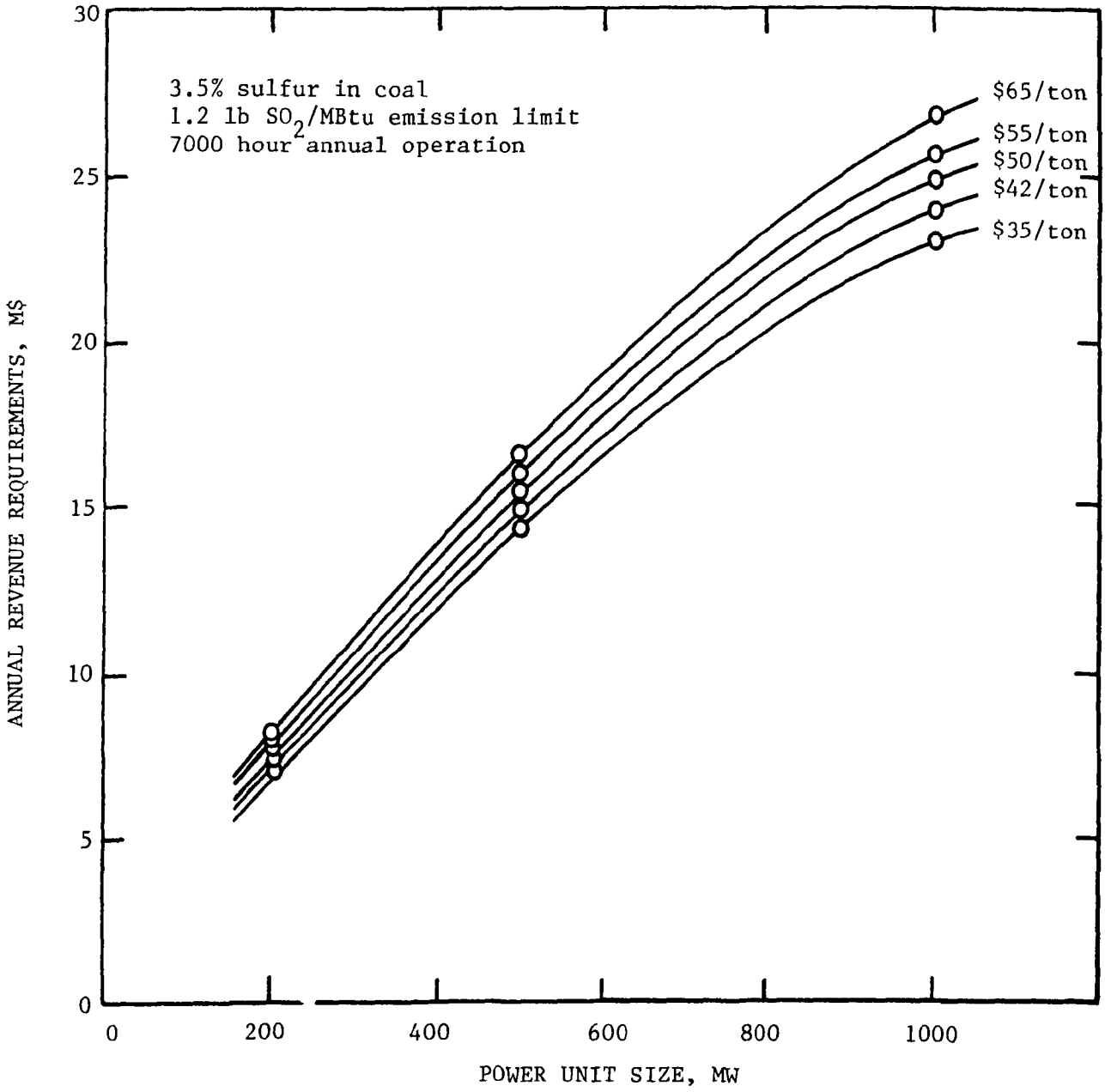

Figure 44. Lime slurry process. Effect of power unit size and variations in lime price on annual revenue requirements: new coal-fired units.

factors described in the premises except that capital charges are based on the undepreciated investment. Total and discounted costs are shown for the magnesia process. The net revenue column shows the credit of $22.50 per ton for 100% sulfuric acid ($25.00 per ton less 10% for marketing).

The differences in the 30-year cumulative net increase in power costs among the four processes show the effect of higher yearly operating cost over the life of the power plant. The lime slurry process base case is $7,700,000 (2%) more than base-case limestone slurry process while the lime slurry process with onsite calcination is $37,800,000 (11%) more and the base-case magnesia process is $102,039,200 (28%) more than the limestone slurry process. Because of the shorter operating time in the later years of plant life and the decrease in the cost of capital, the average yearly operating cost is about two-thirds of what it would be if each year had the first-year operating cost. The cumulative lifetime costs for the four processes at varied sulfur removals are compared in Table 48.

TABLE 48. COMPARISON OF CUMULATIVE LIFETIME DISCOUNTED PROCESS COSTS FOR DIFFERENT SO_2 REMOVAL LEVELS

Process	Cumulative lifetime discounted process cost, mills/kWh (base case)		Increase resulting from increased SO_2 removal to 90%	
	79% SO_2 removal (1.2 lb SO_2/MBtu)	90% SO_2 removal	mills/kWh	%
Limestone	5.64	5.83	0.19	3.4
Lime	5.76	6.01	0.25	4.3
Lime with onsite calcination	6.23	6.47	0.24	3.9
Magnesia[a]	7.93	8.31	0.38	4.6

a. Credit for acid sales included.

Sale of the sulfuric acid in the magnesia process reduces the lifetime operating cost approximately 10% for base-case conditions. Table 49 is a summary of the lifetime sulfuric acid production and credit for all magnesia process case variations.

The variation of levelized revenue requirements with power unit size for new power units is shown in Figure 45 and the variation with coal sulfur content is shown in Figure 46. A factor for the effect of inflation is not included.

TABLE 49. MAGNESIA PROCESS

LIFETIME SULFURIC ACID PRODUCTION AND CREDIT

Case	Years remaining life	Lifetime production 100% sulfuric acid, short tons	Net revenue, $/short ton sulfuric acid	Cumulative revenue	
				Actual, mills/kWh	Discounted, mills/kWh
Coal-Fired Power Unit					
1.2 lb SO_2/MBtu heat input allowable emission					
200 MW E 3.5% sulfur	20	375,000	22.50	0.74	0.73
200 MW N 3.5% sulfur	30	805,500	22.50	0.71	0.71
500 MW E 3.5% sulfur	25	1,459,500	22.50	0.71	0.71
500 MW N 2.0% sulfur	30	906,000	22.50	0.32	0.32
• 500 MW N 3.5% sulfur	30	1,966,500	22.50	0.69	0.69
500 MW N 5.0% sulfur	30	3,027,000	22.50	1.07	1.07
1,000 MW E 3.5% sulfur	25	2,855,500	22.50	0.69	0.69
1,000 MW N 3.5% sulfur	30	3,805,500	22.50	0.67	0.67
90% SO_2 removal					
500 MW N 3.5% sulfur	30	2,242,500	22.50	0.79	0.80
Oil-Fired Power Unit					
0.8 lb SO_2/MBtu heat input allowable emission					
500 MW E 2.5% sulfur	25	629,000	22.50	0.30	0.31

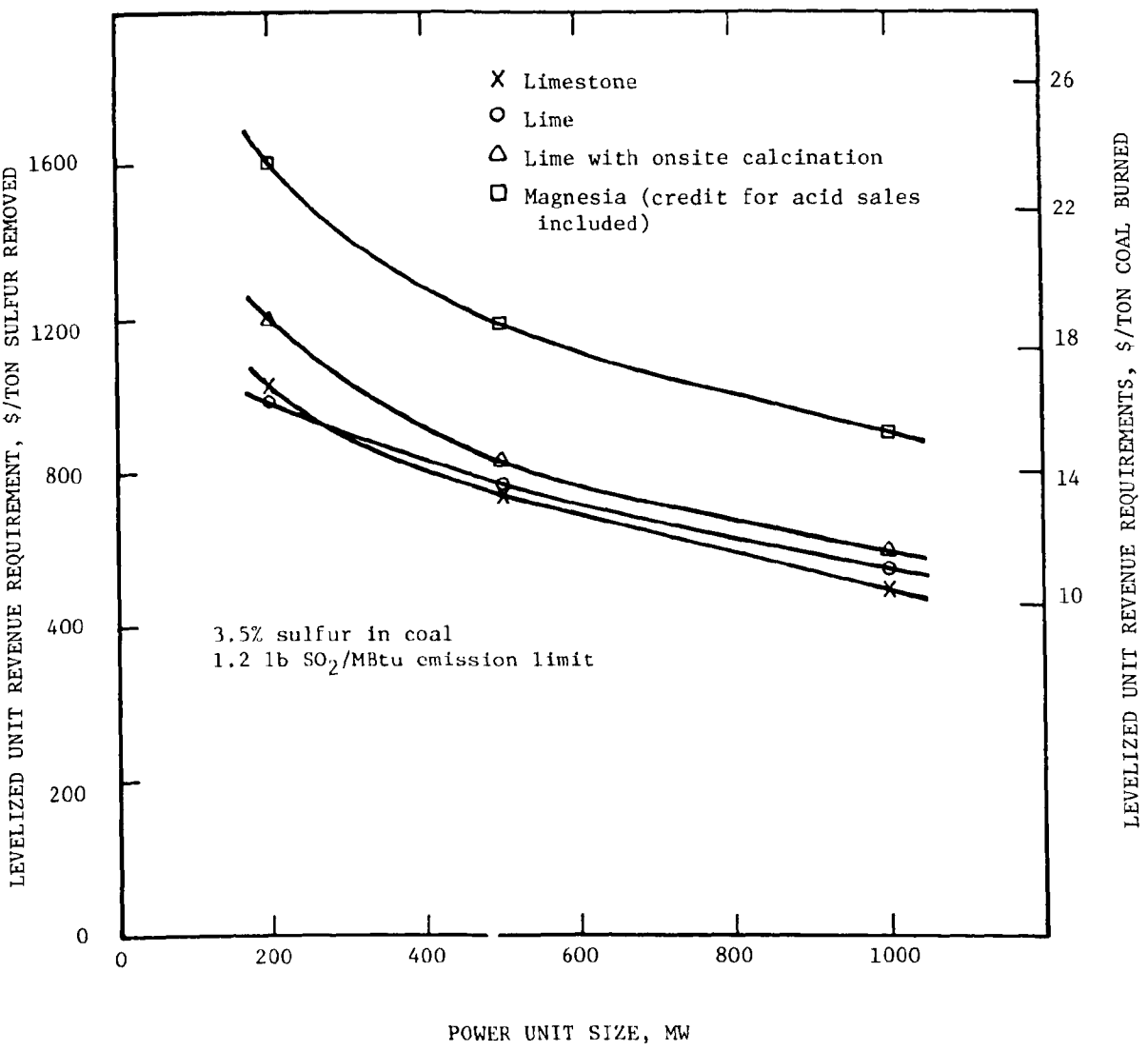

Figure 45. All processes. Effect of power unit size on levelized unit revenue requirements: new coal-fired units.

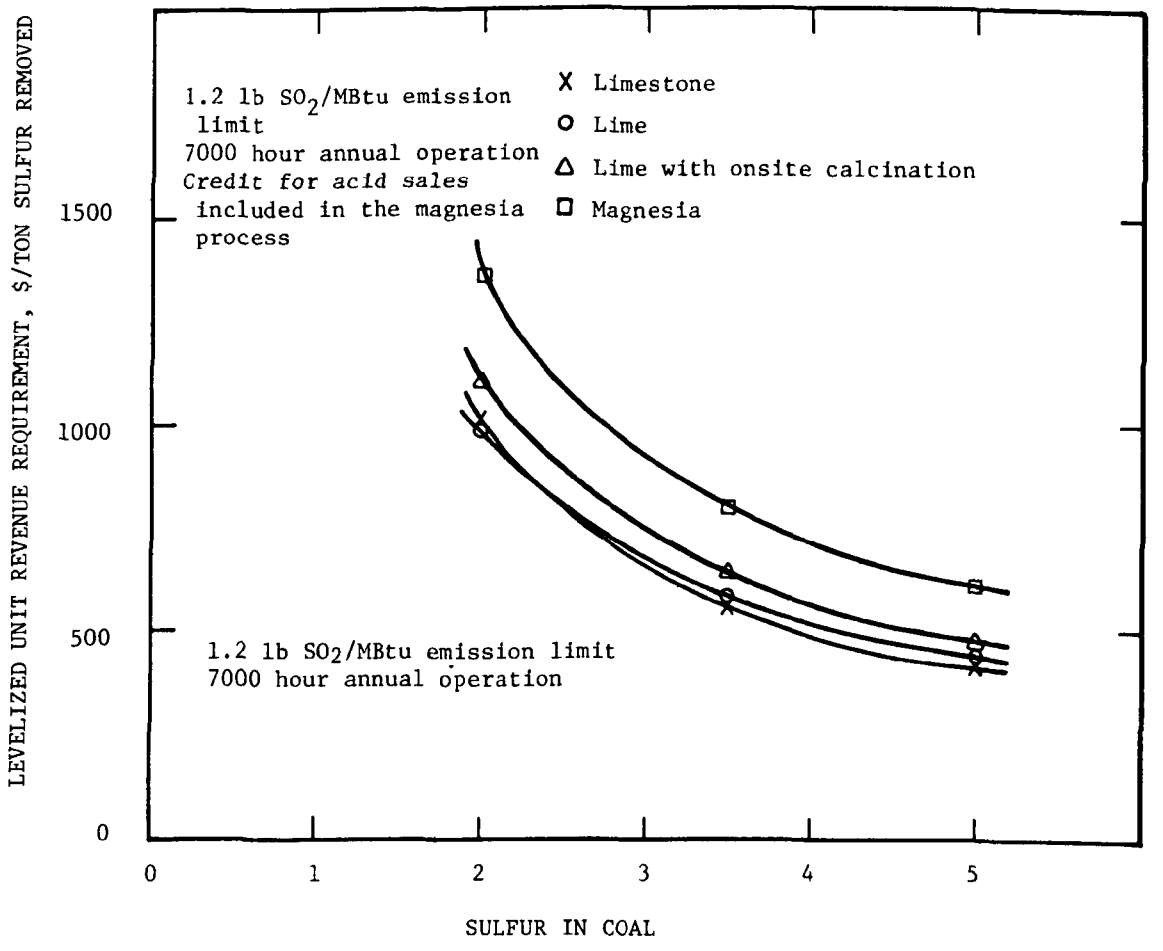

Figure 46. All processes. Effect of sulfur in coal on levelized unit revenue requirements: new 500-MW units.

The effect of raw material costs on the limestone slurry and lime slurry processes shown in the first-year revenue requirements comparison is illustrated more graphically in the levelized lifetime revenue requirements comparison. In the latter case the lime slurry process has lower lifetime revenue requirements for lower raw material consumption conditions (2% sulfur coal, 200-MW power plant) than the limestone slurry process.

Alternate Particulate Removal and Waste Disposal Comparison

In this evaluation costs for the collection and disposal of fly ash are not included because the costs are common to all of the processes. Other possible, perhaps more site-specific, combinations of fly ash and SO_2 removal processes are possible, however. For example, land availability or environmental considerations could preclude ponding as a disposal method. A possible alternative for the magnesia process is the use of a wet particulate scrubber to attain the 0.1 lb/MBtu NSPS. This would eliminate the need of separate chloride scrubbing and disposal.

The effects of these modifications are shown in Tables A-31, A-32, A-123, and A-124 in the appendix and are summarized in Table 50. The base-case limestone slurry process was modified to include a fixation and landfill disposal process previously evaluated by TVA (Barrier and others, 1978, 1979). The sludge was dewatered and blended with dry fly ash and lime to form a solid which was trucked to a landfill. A credit for the cost of a fly ash pond was included. The magnesia process was modified by increasing the chloride scrubber capacity to attain 0.10 lb/MBtu particulate removal and credit for the ESP replaced was given. The credits make these process modifications comparable to the base-case conditions, which exclude ESP costs.

TABLE 50. CASE VARIATIONS FOR MAGNESIA PROCESS WET PARTICULATE SCRUBBING AND LIMESTONE PROCESS WASTE FIXATION AND LANDFILL DISPOSAL

Process	Capital investment, $/kW	Annual net revenue requirements, mills/kWh
Limestone, base case	98	4.02
Limestone, fixation-landfill	80	4.62
Magnesia, base case[a]	132	5.08
Magnesia, particulate scrubbing[a]	116	4.97

a. Including byproduct sulfuric acid credit at $25 per ton.

For both processes there is a reduction in capital costs. In the limestone slurry process the reduction is largely the result of elimination of the pond costs. In the magnesia process the reduction is the result of the ESP credit, which is much larger than the increased costs for combined particulate and chloride scrubbing.

In annual revenue requirements, however, there is only a 0.37 mill/kWh difference between the processes, compared to a 1.06 mills/kWh difference for the base cases. The increase in the limestone slurry process costs is largely the result of greatly increased labor and supervision costs, particularly for disposal operations. The reduction in the magnesia process costs is the result of decreased conversion costs because of the ESP credit and decreased capital charges.

ENERGY EVALUATION AND COMPARISON

In addition to the energy required within the battery limits of an FGD system, use of the technology also consumes energy in the preparation of raw materials and in disposal of byproducts; the total is defined as ground-to-ground energy requirements. The ground-to-ground energy requirements represent all energy withdrawn from a hypothetical total-available-energy reservoir because of operation of the particular FGD process. In the case of byproduct acid production, the acid replaces acid that would have been produced by conventional means. Thus, in terms of the ground-to-ground energy concept, it represents energy that was not withdrawn from the hypothetical reservoir. It therefore represents an energy credit for the process. The component energy uses considered in the ground-to-ground assessment are:

(1) Mining, separation, and sizing of absorbent
(2) Processing prior to delivery to FGD process
(3) Transportation to power plant
(4) FGD battery limits
    (a) Electricity
    (b) Heat
(5) Byproduct disposal
    (a) Electricity
    (b) Fuel

A summary of the total energy requirements expressed as equivalent heat per unit of sulfur removed is shown in Figure 47 for the following absorbents:

(1) Limestone
(2) Lime (calcined onsite)
(3) Magnesia from magnesite
(4) Magnesia from seawater

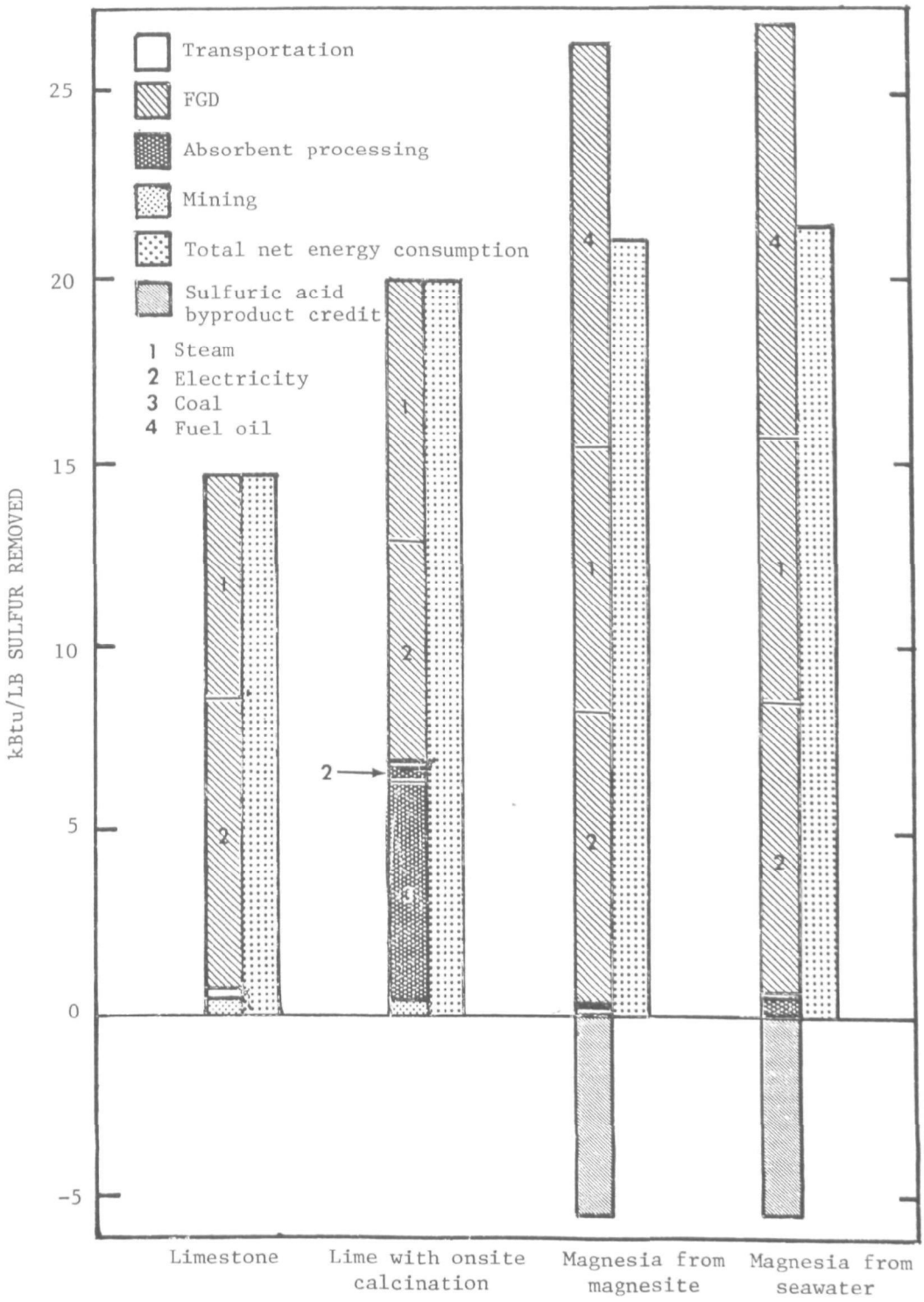

Figure 47. Total energy requirement per pound of sulfur removed. Base case.

Onsite calcination of lime and purchased lime energy requirements were so close that the latter was eliminated from the comparison. Development of the various components is described below.

Mining, Separation, and Sizing

In order to compare costs on a similar basis, the energy requirements per ton of absorbent were first estimated. These were translated to energy requirements per pound of sulfur removed. The comparisons are shown in Figure 48. The range is from 0.191 MBtu for limestone, which is usually quarried from near-surface thick deposits, to 1.2 MBtu for the magnesite which occurs in relatively thin beds with considerable interbedded waste material. About 2 tons of limestone are needed to make 1 ton of lime; 2-3/4 tons of crude ore are required for 1 ton of magnesite; and about 4.5 tons of dolomite, $MgCa(CO_3)_2$, are used in the preparation of 1 ton of magnesia by the seawater process. The varying quantities of raw materials are reflected in the range of energy usage to produce 1 ton of absorbent. The consumption rate in the FGD process varies with the type of absorbent. Therefore the relative contribution of mining, separation, and sizing to overall energy requirements based on sulfur removed, as shown in Figure 49, is not proportional to the energy requirements per ton of absorbent.

Absorbent Processing

The energy requirements for processing the sized raw material into the absorbent varies widely, as shown in Figure 50. Limestone requires no further processing except size reduction from 0 x 1-1/2 to 70% minus 200 mesh; the energy for this grinding operation is included in the FGD battery limits estimate. The energy requirements for calcining limestone to produce lime are 6.27 MBtu per ton of lime produced. The energy requirements to produce magnesia from magnesite ore are 7.61 MBtu per ton. It is slightly higher than lime, in spite of a lower calcining temperature, because more ore must be processed. Magnesia from seawater has energy requirements of slightly over 24 MBtu per ton of magnesia. This high energy use results from the relatively low magnesium concentration in the raw materials and the high temperatures required for thermal decomposition of the raw and intermediate materials.

Transportation

The energy requirements for transporting the absorbents also varies over a wide range, as shown in Figure 51. The short distance from quarry to power plant (a national average of 32 miles, calculated from limestone quarry and power plant location data, is used) results in the low energy requirements for transportation of limestone of 0.077 MBtu per ton. The lime transportation energy requirements of 0.145 MBtu per ton of lime is a reflection of the limestone to lime equivalent weights and processing losses. Magnesia from magnesite has the highest transportation energy requirements, 1.563 MBtu per ton of magnesia, because of the location of the only U.S. commercial magnesite deposit in Gabbs, Nevada,

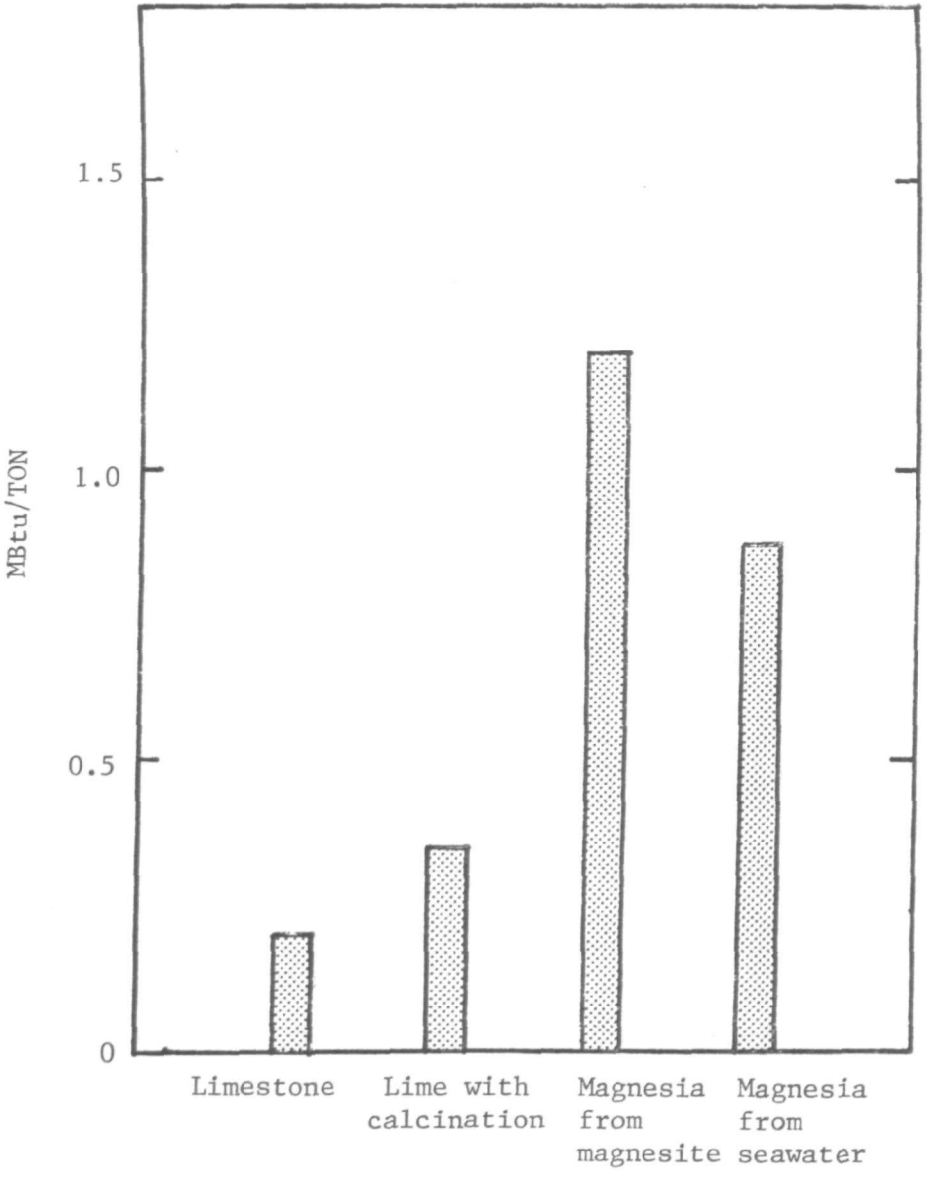

Figure 48. Mining, separation, and sizing energy requirements per ton of absorbent.

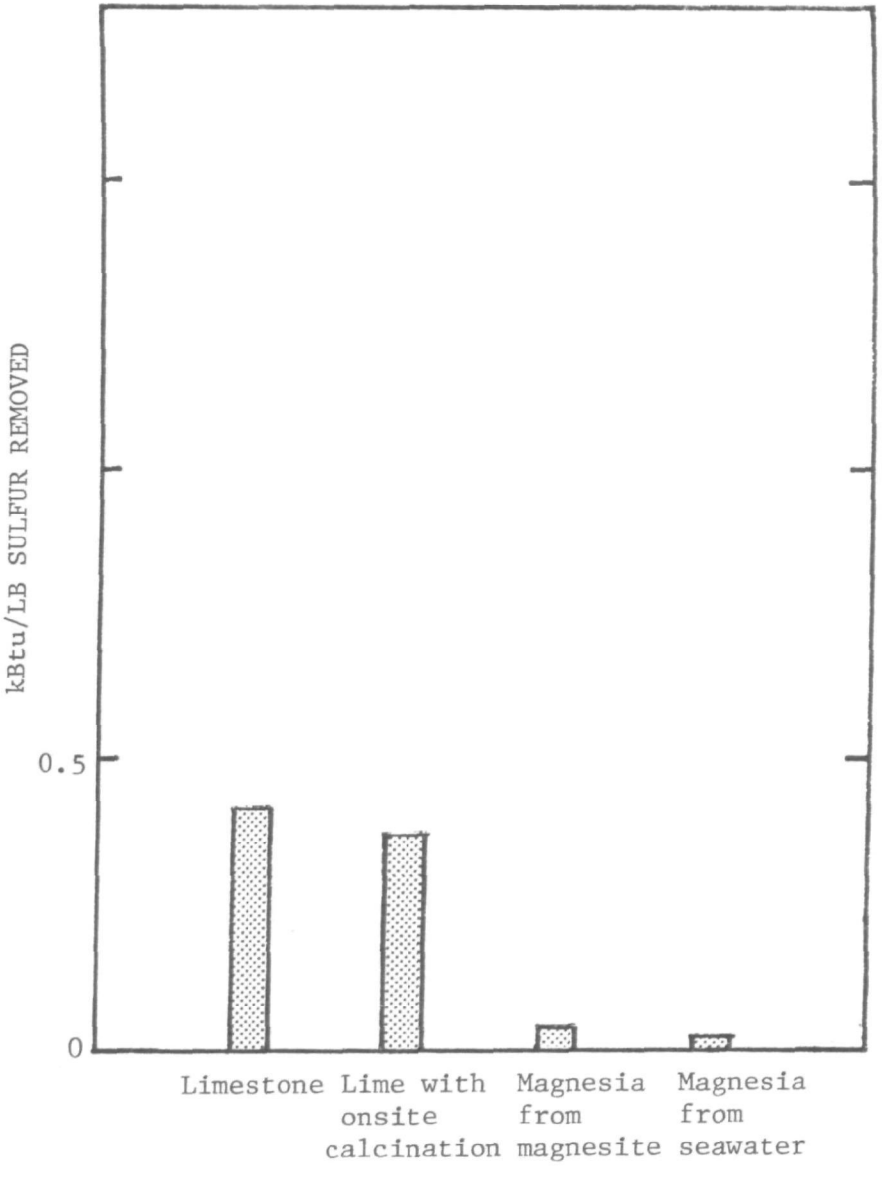

Figure 49. Mining, separation, and sizing energy requirements per pound sulfur removed. Base case.

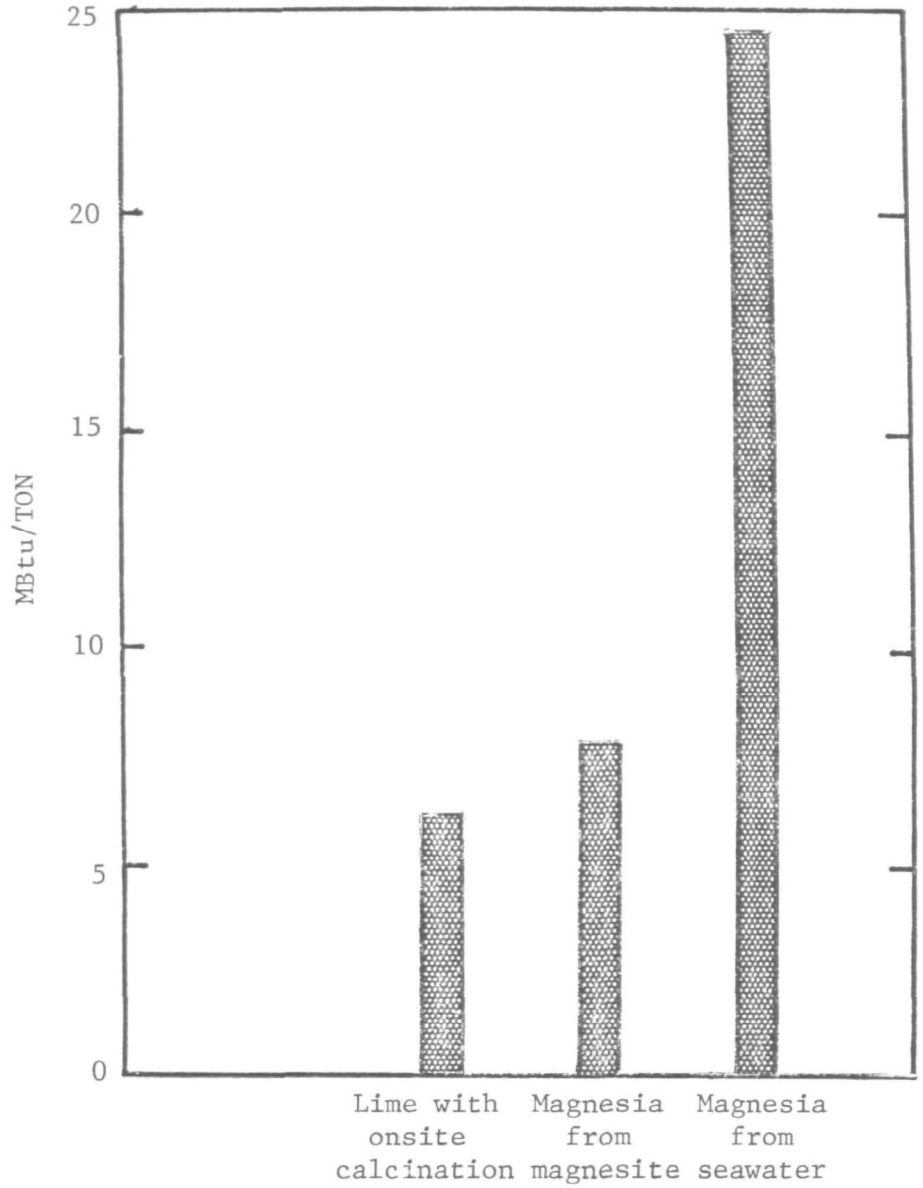

Figure 50. Absorbent processing energy requirements per ton of absorbent production.

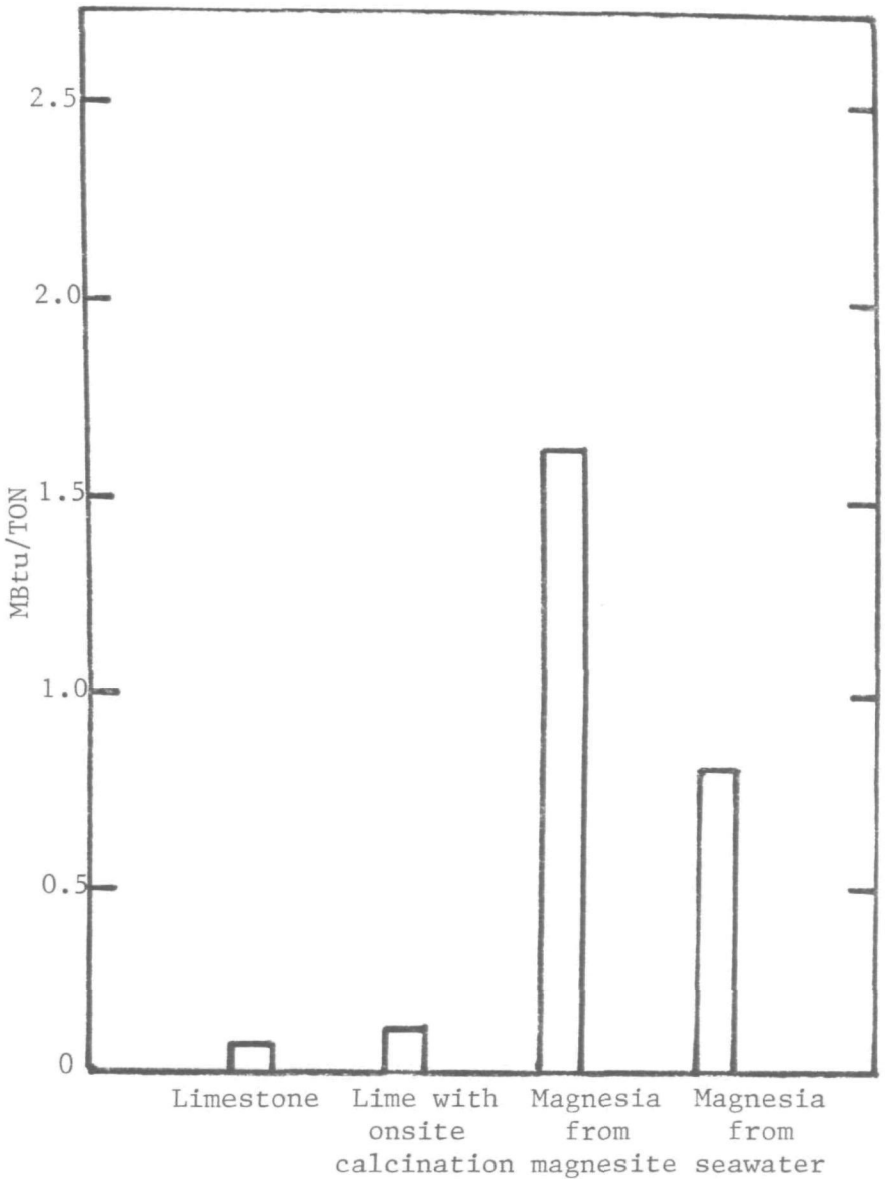

Figure 51. Transportation energy requirements per ton of absorbent.

with respect to the base-case location in the Chicago area. The transportation energy requirements of 0.806 MBtu per ton for magnesia from seawater reflects the dual energy expenditures in shipping dolomite to the Florida plant location and magnesia from Florida to the Chicago area.

Cumulative Energy Requirements for Delivered Absorbents

The energy requirements per ton of absorbent delivered to the base-case power plant location are presented in Figure 52. Limestone, with low mining and transportation costs and no chemical processing requirements, has a cumulative energy requirement of only 0.268 MBtu per ton of limestone delivered. Lime, principally because of the calcining energy requirements, is over 25 times as energy-intensive, with a total energy consumption of 6.777 MBtu per ton. Magnesia from magnesite has higher energy requirements of 10.376 MBtu per ton of delivered magnesia. The highest energy requirements are for magnesia from seawater which requires 25.096 MBtu per ton of magnesia delivered. Processing energy is the dominant element in the total energy requirements of all the delivered absorbents except limestone. These results are summarized in Table 51 which also shows the base-case quantities of each absorbent needed per hour.

TABLE 51. ABSORBENT ENERGY REQUIREMENTS

	Limestone	Lime onsite calcination	Magnesia from magnesite	Magnesia from seawater
Mining, separation and sizing	0.191	0.360	1.20	0.882
Absorbent processing	-	6.272	7.613	24.008
Transport	0.077	0.145	1.563	0.806
Total energy requirement, MBtu/ton, delivered to power plant	0.268	6.777	10.376	25.696
Lb absorbent consumed per lb of sulfur removed	4.58	1.98	0.04[a]	0.04[a]
Btu per lb sulfur removed	614	6,697	219[a]	542[a]

a. Includes only makeup MgO. Regeneration of MgO is included in FGD energy requirements.

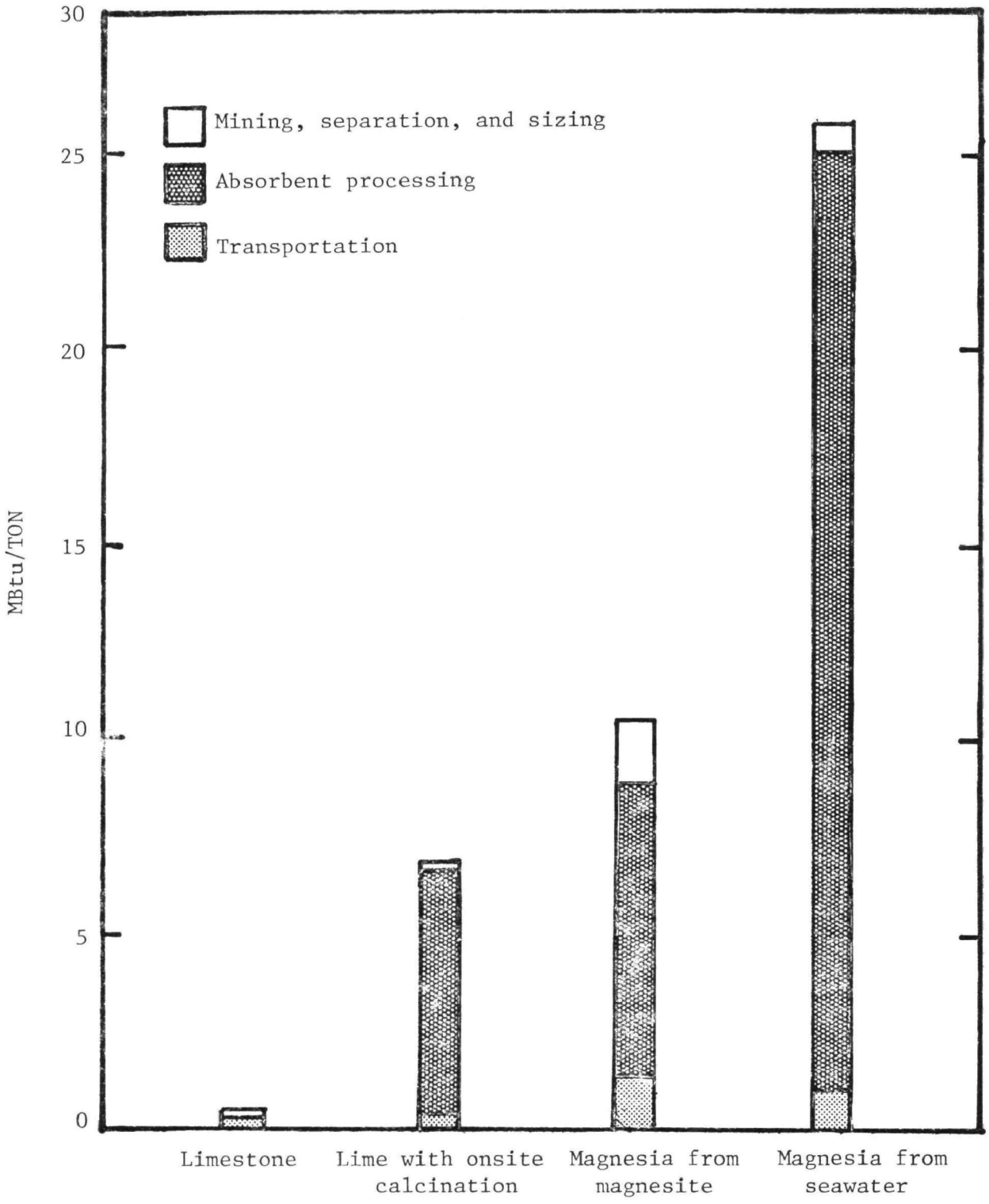

Figure 52. Total energy requirements per ton of absorbent.

The hourly consumption of limestone in the 500-MW base case is over 100 times that of magnesia. Lime consumption is almost 50 times the magnesia consumption. The differences in absorbent consumption for the three processes result in the lime slurry process having substantially higher absorbent energy requirements (6.7 kBtu per lb sulfur removed) than the limestone slurry process or the magnesia process using either of the magnesia sources. Magnesia from magnesite is, in fact, the least energy-intensive absorbent (0.22 kBtu per lb sulfur removed) in terms of material delivered to the power plant. The processing energy requirements are shown in Figure 53. Transportation energy requirements are shown in Figure 54.

FGD Process Battery Limits

The energy requirements for operation of the FGD processes are summarized in Table 52. The energy requirements for the FGD process are the major portion of the total, as shown in Figure 55. For the lime slurry and limestone slurry processes the energy needs are about equally divided between electricity to power the equipment and thermal energy for reheat to 175°F. For the magnesia process, the heat for calcining the magnesium sulfite adds a substantial amount to the energy requirement and accounts for almost one-half of the total in the FGD process.

TABLE 52. FGD ENERGY ALLOTMENT

(Base case: 500 MW, 3.5% sulfur)

Btu/lb Sulfur Removed

	Steam	Electricity	Fuel oil	Heat credit	Total
Limestone	7,047	7,017	-	-	14,064
Lime	7,047	6,087	-	-	13,134
Magnesia (with magnesite or seawater)	7,251	7,956	12,187	(1,209)	26,185

Byproduct Disposal

With the lime and limestone process, the byproduct is a waste material and disposal of untreated sludge by pumping to an onsite storage pond as assumed in this study requires only a small fraction of the total; however, if treatment is required by future regulations and the treated sludge is handled offsite, the energy penalty could be substantial.

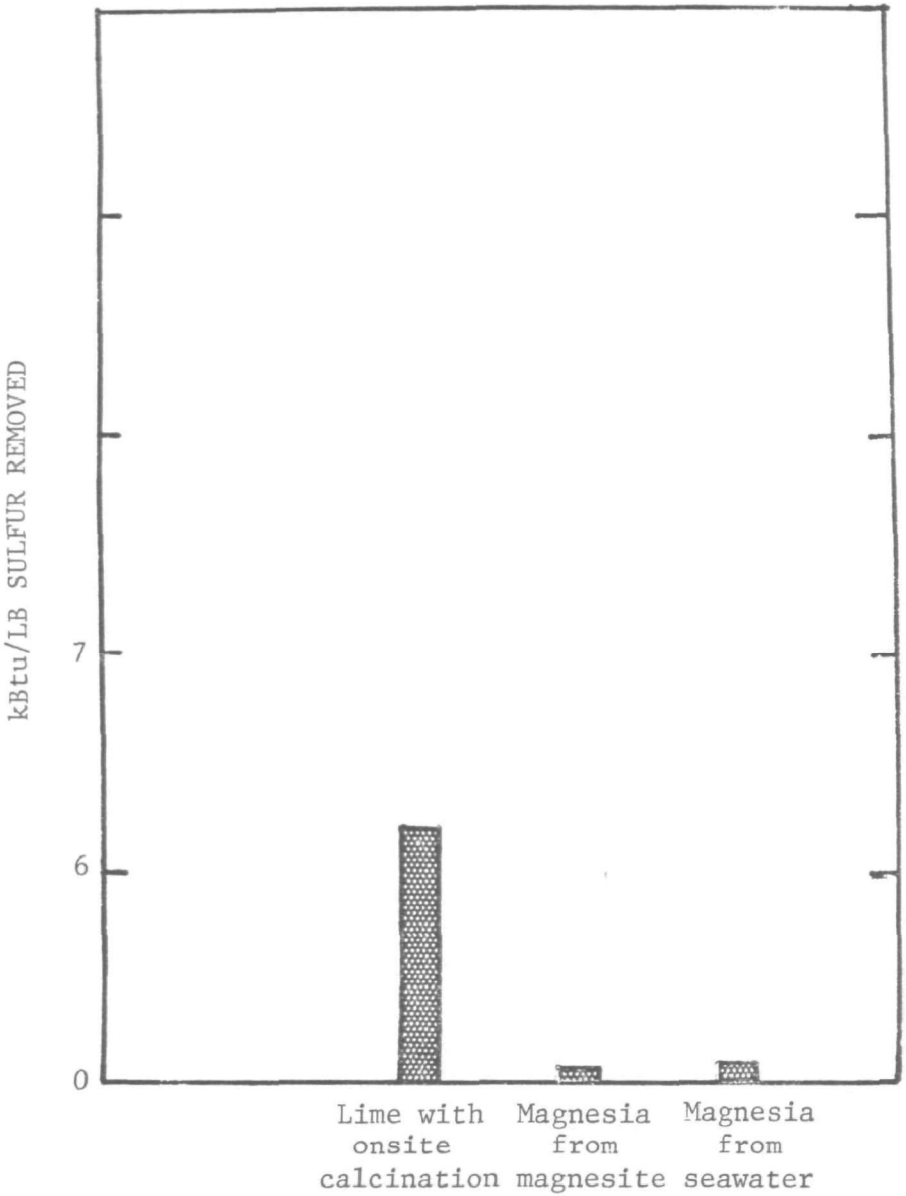

Figure 53. Absorbent processing energy requirements per pound sulfur removed. Base case.

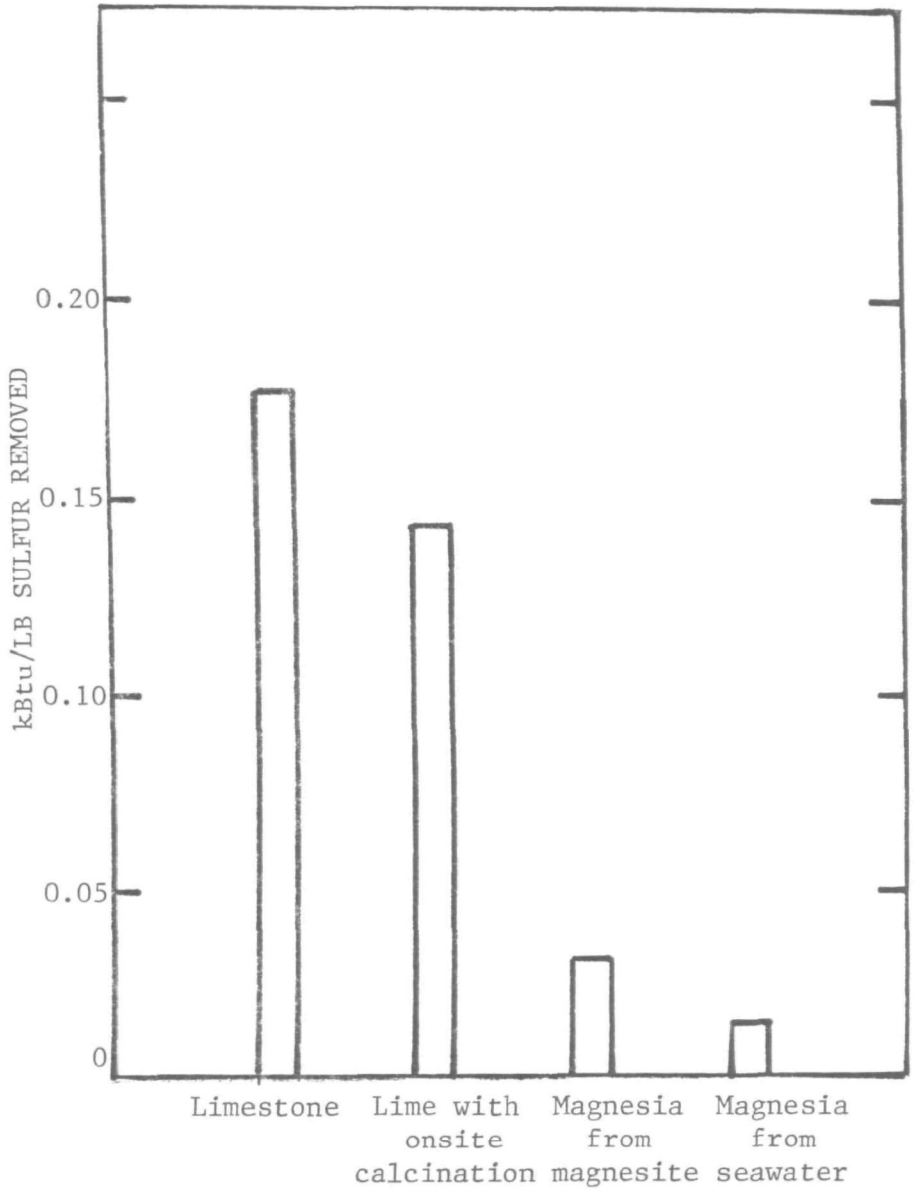

Figure 54. Transportation energy requirements per pound sulfur removed. Base case.

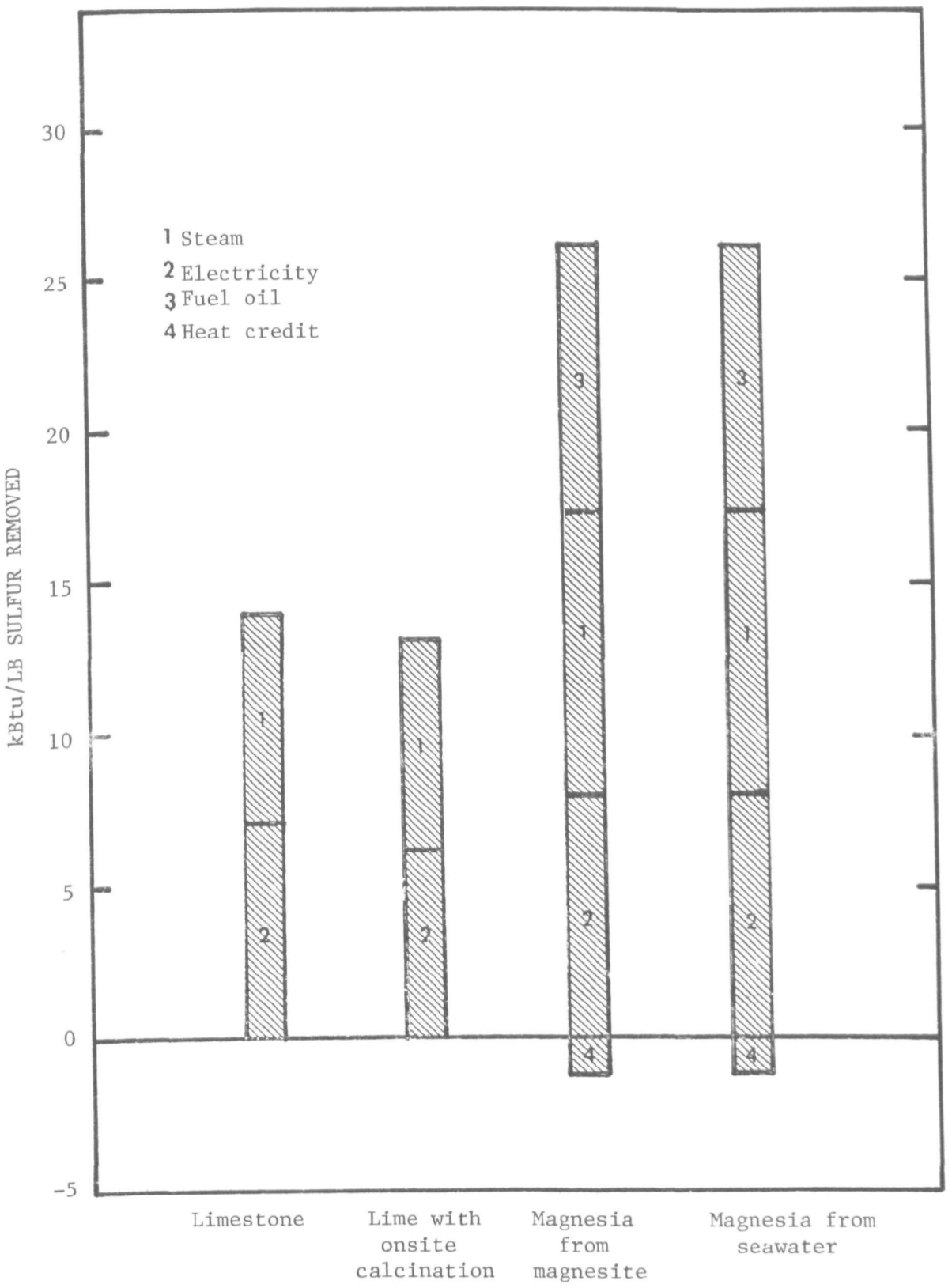

Figure 55. FGD energy requirements per pound of sulfur removed. Base case.

The byproduct from the magnesia process is sulfuric acid, a standard commercial chemical. The electrical energy for pumping the acid from the acid plant to storage and from storage to transport vehicles is small. The energy in the form of fuel for transport vehicles to deliver the product will vary depending on method and distance of shipment. In this study, the transportation of acid to final destination has not been included in the energy assessment because marketing was beyond the scope of the study. For the base-case Chicago area, there is an existing sulfuric acid demand nearby. Sulfuric acid would probably be shipped by tractor trailer. The energy requirements for highway transportation for a 25-mile distance would be 0.120 MBtu per ton of acid. This amounts to 0.87 gallons of diesel fuel consumed per ton of sulfuric acid shipped. In this shipping example, the magnesia process ground-to-ground energy requirements would be increased by 0.88%. Since rail shipments consume less than one-third the energy for trucking per ton-mile, the acid could be shipped 160 miles by rail with the same energy consumption of the 25-mile truck shipment.

Byproduct Sulfuric Acid Energy Credit

Sulfuric acid is normally produced from elemental sulfur that is mined by the Frasch method, an energy-intensive operation. Natural gas is the usual fuel. Replacement of acid produced from sulfur with recovered byproduct acid will conserve the energy used in mining, transportation, and conversion of sulfur to sulfuric acid. Offsetting these energy savings, the heat generated from combustion of sulfur is not available and must be deducted in an energy balance. (The potential combustion energy in the unmined sulfur is, however, available for future use.)

The component energy changes and the net effect of these on the ground-to-ground energy requirements for the magnesia process are shown in Table 53.

Total Ground-to-Ground Energy Requirements

A summary of the component energy requirements is shown in Table 54. The same data were shown previously in Figure 47.

TABLE 53. ENERGY REQUIRED FOR PRODUCTION OF SULFURIC ACID FROM SULFUR

(108,000 tons of 100% H_2SO_4 per year)

Energy expenditure	Energy required, Btu/lb sulfur removed[a]
Sulfur mining (natural gas)	7,940
Sulfur transport (diesel oil)	343
Sulfuric acid production (electricity)	937
Heat recovery in sulfuric acid production (steam)	-3,729
Net energy requirements	5,491

a. Based on 108,000 tons of 100% H_2SO_4 per year (the quantity produced in the base-case magnesia process).

TABLE 54. GROUND-TO-GROUND ENERGY REQUIREMENTS ASSESSMENT

Btu/LB SULFUR REMOVED

	Limestone	Lime-with-onsite calcination	Magnesia-magnesite	Magnesia-seawater
Mining	438	356	25	18
Absorbent processing	-	6,198	161	507
Transportation	176	143	33	17
FGD	14,042	13,165	26,387	26,387
Sludge disposal	22	15	-	-
Total	14,678	19,877	26,658	26,929
Byproduct credit	-	-	(5,491)	(5,491)
Net total	14,678	19,877	21,115	21,438
MBtu/kWh	291	395	420	426
% difference from limestone process	0	35	44	46
% of total power unit energy output	3.24	4.39	4.67	4.73

Previous assessments of FGD-only energy requirements have indicated a substantial energy penalty for the magnesia scrubbing process compared to the limestone slurry and lime slurry processes. This ground-to-ground assessment results in a substantial reduction in the relative energy differences. The magnesia process requires only 44% to 46% more energy than the limestone scrubbing process. In the FGD-only assessment magnesia consumed about 88% more energy. Moreover, the energy requirements difference between magnesia and lime scrubbing is narrowed from over 100%, for the FGD battery limits, to about 7% in the ground-to-ground comparison. The differences in the ground-to-ground and FGD-only energy comparison are illustrated below.

Energy requirements as percent above lowest process

	FGD-only	Ground-to-ground
Limestone	7%	0%
Lime	0%	35%
Magnesia (from magnesite)	100%	44%
Magnesia (from seawater)	100%	46%

CONCLUSIONS

The conclusions of this study have been summarized for capital investment, annual revenue requirements, ground-to-ground energy requirements, and process status. They are listed as follows.

CAPITAL INVESTMENT

1. The capital investments for all three processes are substantially increased over the results reported in 1975 (McGlamery and others). While the ranking of the three processes has not changed, the magnesia process capital investment has increased at a greater rate than those for the other processes. The principal reasons for this are changes and additions in the less mature magnesia process (such as materials-handling changes and chloride purge addition) and inflation effects.

2. The lime process continues to have the lowest capital investment requirements followed closely by limestone. Lime-with-onsite calcination is substantially higher than limestone and magnesia has the highest capital requirements. This relative ranking can be expected to continue unless process improvements are pursued with MgO scrubbing as they have been with limestone and lime scrubbing.

3. In the oil-fired case variation the difference between capital investments for the magnesia and lime-with-onsite calcination is negligible. Elimination of the chloride purge and fly ash disposal systems (not required for oil firing) reduces the magnesia capital requirements almost to those of the lime-with-onsite-calcination system.

4. The influence of waste disposal pond capital costs is greater for the smaller (200 MW) power plants. Economies of scale reduce this influence substantially with the larger (500 and 1000 MW) plants.

5. The capital investment costs related to spent-slurry processing in the magnesia process are about three times greater than capital investment disposal costs in the waste-producing processes. Elimination of pond costs does not compensate for the additional equipment requirements of the magnesia process.

6. The removal of 90% of the SO_2 to meet the revised NSPS (as opposed to the base-case removal to 1.2 lb SO_2/MBtu heat input of the former NSPS) has only a small effect on the capital investments for all three processes.

7. As the coal sulfur content increases, the magnesia and lime-with-onsite-calcination processes capital requirements increase at a slightly greater rate than those for limestone and lime processes. This is to be expected because of the more complicated (more items of equipment) magnesia and lime-with-onsite-calcination processes.

ANNUAL REVENUE REQUIREMENTS

1. The ranking of the processes by annual revenue requirements has not changed from that of the earlier evaluation (McGlamery and others). For the base-case conditions limestone is lowest (4.02 mills per kWh), followed by lime (4.25 mills per kWh), lime-with-onsite calcination (4.45 mills per kWh), and magnesia (5.05 mills per kWh, including credit for acid sales).

2. The range of annual revenue requirements is significantly narrower than the range of capital investment requirements. The base-case revenue requirements difference between the limestone to magnesia processes is under 26% whereas the base-case capital investment for the magnesia process is over 45% greater than that for the lime process.

3. As found in earlier studies, the annual revenue requirements per kWh are reduced substantially for all processes as the power plant size is increased from 200 to 1000 MW. The reduction in mills per kWh is about the same for the limestone, lime-with-onsite calcination, and magnesia processes. The lime process, with its lower capital investment, is slightly less sensitive to scale-up economies.

4. Lime is the highest cost absorbent in terms of dollars per ton of sulfur removed. The lime process is also the least capital-intensive and therefore benefits less than the others in scale-up economies resulting from increased sulfur content of the fuel. The lime-with-onsite-calcination process increase in annual revenue requirements is less than for the lime process due to the improved economics of onsite calcination at the higher rates required for higher sulfur fuel.

5. There are conditions under which the lime process is more economical to operate than the limestone process. The higher capital charges for the limestone process, relative to the lime process, make

this possible. The lime process has lower revenue requirements at low raw material consumption levels (small plant size, low-sulfur coal, and low heat rate) and the limestone process has lower revenue requirements at high raw material consumption levels. Slightly below the 200-MW power plant size with 3.5% sulfur coal, the lime process has lower annual revenue requirements. At the 500-MW power plant size, the lime process becomes more economical with coal sulfur contents below approximately 1.5%.

6. The economic feasibility of onsite calcination of limestone is very sensitive to power plant size and sulfur content of the coal. At the 3.5% sulfur level and delivered costs of $7 and $42 per ton for limestone and lime the break-even power plant size for the onsite calcination is approximately 1150 MW. With a coal sulfur content of 5.0%, the minimum power plant size for economical onsite calcination is approximately 750 MW.

7. If limestone slurry ponding is not a practical option and fixation with landfill disposal is utilized, the annual revenue requirements increase about 15%, despite a reduction in capital requirements for the fixation-landfill option. Increased labor and materials costs for fixation-landfill disposal more than offset the capital requirements reduction.

ENERGY REQUIREMENTS

1. The energy consumed per ton of absorbent delivered to the power plant (including mining, processing, and transportation energy) varies almost one hundredfold from limestone (0.27 MBtu per ton) to magnesia from seawater (25.7 MBtu per ton), however, the energy use associated with the delivered absorbent is less significant when related to the total energy requirement expressed as energy per unit of sulfur removed.

2. The byproduct credit for reduced energy consumption caused by the replacement of conventional sulfuric acid production from sulfur with FGD byproduct acid is a significant element (54.5 MBtu per hour) of the base-case magnesia process. The application of this energy credit reduces the total ground-to-ground energy requirements of the magnesia process by one-fifth.

3. The energy requirements advantage of lime over magnesia within the FGD process battery limits is nearly eliminated in the ground-to-ground comparison. The energy advantage of the limestone FGD process over the magnesia process is reduced over one-half when compared with the magnesia process on the ground-to-ground basis.

PROCESS DEVELOPMENT

The lime and limestone scrubbing technologies are the most highly developed and most utilized systems in the United States. The magnesia process, however, is relatively immature and requires additional development and demonstration to determine the long-term effects of contaminant buildup in recycled magnesia, the need for and type of chloride purge, and calcining operation reliability as well as other information which can be developed only with experience in long-term operation of the completely integrated system.

REFERENCES

Barrier, J. W., H. L. Faucett, and L. J. Henson, 1978. Economics of Disposal of Lime/Limestone Scrubbing Wastes: Untreated and Chemically Treated Wastes. Bulletin Y-123, Tennessee Valley Authority, Muscle Shoals, Alabama; EPA-600/7-78-023a, U.S. Environmental Protection Agency, Research Triangle Park, North Carolina.

Barrier, J. W., H. L. Faucett, and L. J. Henson, 1979. Economics of Disposal of Lime/Limestone Scrubbing Wastes: Sludge/Flyash Blending and Gypsum Systems. Bulletin Y-140, Tennessee Valley Authority, Muscle Shoals, Alabama; EPA-600/7-79-069, U.S. Environmental Protection Agency, Research Triangle Park, North Carolina.

Chemical Construction Corporation, 1970. Engineering Analysis of Emissions Control Technology for Sulfuric Acid Manufacturing Processes. Vol. 1, Chemical Construction Corporation, Consulting Division, New York; NTIS PB 190 393.

Chemical Engineering, 1975-1976. Economic Indicators. Vols. 82 and 83 (all issues).

Chemical Engineers Handbook, 1973. 5th edition, R. H. Perry and C. H. Chilton, editors, McGraw-Hill, New York.

Coal Age, 1979. Hints on Off-Highway Fuel Savings. 84(4):133, 136.

Duval, W. A. Jr., W. R. Gallagher, R. G. Knight, C. R. Kolarz, and R. J. McLaren, 1978. State-of-the-Art of FGD Sludge Fixation. EPRI FP-671, Project 786-1, Final Report. Electric Power Research Institute, Palo Alto, California.

Electrical World, 1977a. Generation - The Fuels Outlook. 187(5):39.

Electrical World, 1977b. Annual Statistical Report - Declining Orders Signal Danger. 187(6):50-55.

Federal Register, 1971. Standards of Performance for New Stationary Sources. 36(247), Part II.

Federal Register, 1979. New Stationary Sources Performance Standards; Electric Utility Steam Generating Units. 44(113):33580-33624.

FERC, 1968. Hydroelectric Power Evaluation, FPC P-35 and Supplement No. 1, FPC P-38 (1969). Federal Energy Regulatory Commission, U.S. Government Printing Office, Washington, DC.

FERC, 1973. Steam-Electric Construction Cost and Annual Production Expenses, Twenty-Fourth Annual Supplement - 1971. Federal Energy Regulatory Commission, U.S. Government Printing Office, Washington, DC.

Guthrie, K. M., 1969. Capital Cost Estimating. Chemical Engineering, 76(6):114-142.

Kennedy, F. M. and S. V. Tomlinson, 1978. Flue Gas Desulfurization in the United States - 1977. Bulletin Y-125, Tennessee Valley Authority, Muscle Shoals, Alabama; ANL/ECT-3, Appendix F, Environmental Control Implications of Generating Electric Power from Coal, Argonne National Laboratory, Argonne, Illinois.

Kidder, Peabody & Company, 1978. Electric Utility Generating Equipment: Status Report on Fossil Boilers. Kidder, Peabody, & Company, Inc.

Lowell, Phillip S., Meserole, Frank B., Parsons, Terry B., 1977. Precipitation Characteristics of Magnesium Sulfite Hydrates in Magnesium Oxide Scrubbing. EPA-600/7-77-109.

McGlamery, G. G., R. L. Torstrick, W. J. Broadfoot, J. P. Simpson, L. J. Henson, S. V. Tomlinson, and J. F. Young, 1975. Detailed Cost Estimates for Advanced Effluent Desulfurization Processes. Bulletin Y-90, Tennessee Valley Authority, Muscle Shoals, Alabama; EPA-600/2-75-006, U.S. Environmental Protection Agency, Washington, DC.

McGlamery, G. G., Torstrick, R. L., J. P. Simpson, and J. F. Phillips, Jr., 1973. Conceptual Design and Cost Study, Sulfur Oxide Removal from Stack Gas Magnesia Scrubbing - Regeneration: Production of Concentrated Sulfuric Acid. Bulletin Y-61, Tennessee Valley Authority, Muscle Shoals, Alabama; EPA-R2-73-244, U.S. Environmental Protection Agency, Office of Research and Monitoring, Washington, DC.

Peters, M. S., and K. D. Timmerhaus, 1968. Plant Design and Economics for Chemical Engineers. 2nd edition, McGraw-Hill, New York, pp. 106-108.

Popper, Herbert, 1970. Modern Cost Engineering Technique. McGraw-Hill, New York.

The Richardson Rapid System, 1978. Process Plant Construction Estimating Standards. Vols. 1, 3, and 4, 1978-1979 edition, Richardson Engineering Services, Inc., Solana Beach, California.

Rock Products, 1977. Union Lime Company's Ouplaas Works. 80(6): 48-51, 84-88.

Rossoff, J., P. P. Leo, and R. B. Fling, 1978. Landfill and Ponding Concepts for FGD Sludge Disposal. Preprint of paper presented at U.S. Environmental Protection Agency Industry Briefing, Research Triangle Park, North Carolina, August 29, 1978.

Smith, M., and Melia, M., 1979. EPA Utility FGD Survey: July-September 1979. EPA-600/7-79-022f, U.S. Environmental Protection Agency, Washington, DC.

Tomlinson, S. V., F. M. Kennedy, F. A. Sudhoff, and R. L. Torstrick, 1979. Definitive SO_x Control Process Evaluations: Limestone, Double-Alkali, and Citrate FGD Processes. Bulletin ECDP B-4, Tennessee Valley Authority, Muscle Shoals, Alabama; EPA-600/7-79-177, U.S. Environmental Protection Agency, Research Triangle Park, North Carolina.

APPENDIX A

TOTAL CAPITAL INVESTMENT, AVERAGE ANNUAL REVENUE REQUIREMENT, AND LIFETIME REVENUE REQUIREMENT TABLES - ALL PROCESSES AND CASE VARIATIONS

TABLE A-1. LIMESTONE SLURRY PROCESS

SUMMARY OF ESTIMATED CAPITAL INVESTMENT

(Variation from base case: 200-MW existing)

	Investment, $	% of total direct investment
Direct Investment		
Materials handling (hoppers, feeders, conveyors, elevators, bins, shaker, and puller)	1,078,000	8.4
Feed preparation (feeders, crushers, ball mills, hoists, tanks, agitators, and pumps)	1,213,000	9.4
Gas handling (common feed plenum and booster fans, gas ducts and dampers from plenum to absorber, exhaust gas ducts and dampers from reheater and stack)	2,203,000	17.1
SO_2 absorption (two mobile-bed scrubbers including presaturator and entrainment separators, recirculation tanks, agitators, and pumps)	4,308,000	33.4
Stack gas reheat (two indirect steam reheaters)	584,000	4.5
Solids disposal (onsite disposal, slurry disposal pumps, and pond water return pumps)	1,418,000	11.0
Subtotal	10,804,000	83.8
Services, utilities, and miscellaneous	648,000	5.0
Total process areas excluding pond construction	11,452,000	88.8
Pond construction	1,444,000	11.2
Total direct investment	12,896,000	100.0
Indirect Investment		
Engineering design and supervision	869,000	6.8
Architect and engineering contractor	203,000	1.6
Construction expense	2,068,000	16.0
Contractor fees	670,000	5.2
Total indirect investment	3,810,000	29.6
Contingency	3,341,000	25.9
Total fixed investment	20,047,000	155.5
Other Capital Charges		
Allowance for startup and modifications	1,860,000	14.4
Interest during construction	2,406,000	18.6
Total depreciable investment	24,313,000	188.5
Land	295,000	2.3
Working capital	513,000	4.0
Total capital investment	25,121,000	194.8
	($126/kW)	

Basis
Evaluation represents project beginning mid-1977, ending mid-1980. Average cost basis for scaling, mid-1979.
Stack gas reheat to 175°F by indirect steam reheat.
Minimum in-process storage; only pumps are spared.
Disposal pond located 1 mile from power plant.
Investment requirements for fly ash removal and disposal excluded; FGD process investment estimate begins with common feed plenum downstream of the ESP.
Construction labor shortages with accompanying overtime pay incentive not considered.

TABLE A-2. LIMESTONE SLURRY PROCESS

ANNUAL REVENUE REQUIREMENTS

(Variation from base case: 200-MW existing)

	Annual quantity	Unit cost, $	Total annual cost, $	% of average annual revenue requirements
Direct Costs				
Delivered raw materials				
Limestone	67,200 tons	7.00/ton	470,400	6.30
Total raw materials cost			470,400	6.30
Conversion costs				
Operating labor and supervision	16,440 man-hr	12.50/man-hr	205,500	2.75
Utilities				
Steam	206,800 MBtu	2.00/MBtu	413,600	5.54
Process water	102,800 kgal	0.12/kgal	12,300	0.16
Electricity	23,224,600 kWh	0.031/kWh	720,000	9.64
Maintenance				
Labor and material			1,074,000	14.38
Analyses	1,980 man-hr	17.00/man-hr	33,700	0.45
Total conversion costs			2,459,100	32.92
Total direct costs			2,929,500	39.22
Indirect Costs				
Capital charges				
Depreciation, interim replacements, and insurance at 7.0% of total depreciable investment			1,701,900	22.79
Average cost of capital and taxes at 8.6% of total capital investment			2,160,400	28.92
Overheads				
Plant, 50% of conversion costs less utilities			656,600	8.79
Administrative, 10% of operating labor			20,600	0.28
Total indirect costs			4,539,500	60.78
Total annual revenue requirements			7,469,000	100.00

	Mills/kWh	$/ton coal burned	$/MBtu heat input	$/ton S removed
Equivalent unit revenue requirements	5.34	11.79	0.56	509

Basis
- Midwest plant location, 1980 revenue requirements.
- Remaining life of power plant, 20 yr.
- Power unit on-stream time, 7,000 hr/yr.
- Coal burned, 633,500 tons/yr, 9,500 Btu/kWh.
- Stack gas reheat to 175°F.
- Sulfur removed, 14,670 short tons/yr; solids disposal, 77,790 tons/yr calcium solids including only hydrate water.
- Investment and revenue requirement for removal and disposal of fly ash excluded.
- Total direct investment, $12,896,000; total depreciable investment, $24,313,000; and total capital investment, $25,121,000.
- All tons shown are 2,000 lb.

TABLE A-3

LIMESTONE SLURRY PROCESS VARIATION FROM BASE CASE: 200 MW EXISTING REGULATED CO. ECONOMICS

TOTAL CAPITAL INVESTMENT 25121000

YEARS AFTER POWER UNIT START	ANNUAL OPERATION, KW-HR/KW	POWER UNIT HEAT REQUIREMENT, MILLION BTU/YEAR	POWER UNIT FUEL CONSUMPTION, TONS COAL/YEAR	SULFUR REMOVED BY POLLUTION CONTROL PROCESS, TONS/YEAR	BY-PRODUCT RATE, EQUIVALENT TONS/YEAR DRY SOLIDS	NET REVENUE, $/TON DRY SOLIDS	TOTAL OP. COST INCLUDING REGULATED ROI FOR POWER COMPANY, $/YEAR	TOTAL NET SALES REVENUE, $/YEAR	NET ANNUAL INCREASE (DECREASE) IN COST OF POWER, $	CUMULATIVE NET INCREASE (DECREASE) IN COST OF POWER, $
1										
2										
3										
4										
5										
6										
7										
8										
9										
10										
11	5000	9500000	452400	10500	55600	0.0	9073400	0	9073400	9073400
12	5000	9500000	452400	10500	55600	0.0	8864300	0	8864300	17937700
13	5000	9500000	452400	10500	55600	0.0	8655200	0	8655200	26592900
14	5000	9500000	452400	10500	55600	0.0	8446100	0	8446100	35039000
15	5000	9500000	452400	10500	55600	0.0	8237000	0	8237000	43276000
16	3500	6650000	316700	7300	38900	0.0	7398700	0	7398700	50674700
17	3500	6650000	316700	7300	38900	0.0	7189600	0	7189600	57864300
18	3500	6650000	316700	7300	38900	0.0	6980500	0	6980500	64844800
19	3500	6650000	316700	7300	38900	0.0	6771400	0	6771400	71616200
20	3500	6650000	316700	7300	38900	0.0	6562300	0	6562300	78178500
21	1500	2850000	135700	3100	16700	0.0	5418100	0	5418100	83596600
22	1500	2850000	135700	3100	16700	0.0	5209000	0	5209000	88805600
23	1500	2850000	135700	3100	16700	0.0	4999900	0	4999900	93805500
24	1500	2850000	135700	3100	16700	0.0	4790800	0	4790800	98596300
25	1500	2850000	135700	3100	16700	0.0	4581700	0	4581700	103178000
26	1500	2850000	135700	3100	16700	0.0	4372600	0	4372600	107550600
27	1500	2850000	135700	3100	16700	0.0	4163500	0	4163500	111714100
28	1500	2850000	135700	3100	16700	0.0	3954400	0	3954400	115668500
29	1500	2850000	135700	3100	16700	0.0	3745300	0	3745300	119413800
30	1500	2850000	135700	3100	16700	0.0	3536200	0	3536200	122950000
TOT	57500	109250000	5202500	120000	639500		122950000	0	122950000	

LIFETIME AVERAGE INCREASE (DECREASE) IN UNIT OPERATING COST

DOLLARS PER TON OF COAL BURNED	23.63	0.0	23.63
MILLS PER KILOWATT-HOUR	10.69	0.0	10.69
CENTS PER MILLION BTU HEAT INPUT	112.54	0.0	112.54
DOLLARS PER TON OF SULFUR REMOVED	1024.58	0.0	1024.58
PROCESS COST DISCOUNTED AT 11.2% TO INITIAL YEAR, DOLLARS	56591300	0	56591300

LEVELIZED INCREASE (DECREASE) IN UNIT OPERATING COST EQUIVALENT TO DISCOUNTED PROCESS COST OVER LIFE OF POWER UNIT

DOLLARS PER TON OF COAL BURNED	21.58	0.0	21.58
MILLS PER KILOWATT-HOUR	9.76	0.0	9.76
CENTS PER MILLION BTU HEAT INPUT	102.75	0.0	102.75
DOLLARS PER TON OF SULFUR REMOVED	932.31	0.0	932.31

TABLE A-4. LIMESTONE SLURRY PROCESS

SUMMARY OF ESTIMATED CAPITAL INVESTMENT

(Variation from base case: 200 MW)

	Investment, $	% of total direct investment
Direct Investment		
Materials handling (hoppers, feeders, conveyors, elevators, bins, shaker, puller)	972,000	7.4
Feed preparation (feeders, crushers, ball mills, hoists, tanks, agitators, and pumps)	1,195,000	9.1
Gas handling (common feed plenum and booster fans, gas ducts and dampers from plenum to absorber, exhaust gas ducts and dampers from reheater and stack)	1,850,000	14.1
SO_2 absorption (two mobile-bed scrubbers including presaturator and entrainment separators, recirculation tanks, agitators, and pumps)	4,038,000	30.9
Stack gas reheat (two indirect steam reheaters)	569,000	4.4
Solids disposal (onsite disposal, slurry disposal pumps, and pond water return pumps)	1,266,000	9.7
Subtotal	9,890,000	75.6
Services, utilities, and miscellaneous	593,000	4.5
Total process areas excluding pond construction	10,483,000	80.1
Pond construction	2,598,000	19.9
Total direct investment	13,081,000	100.0
Indirect Investment		
Engineering design and supervision	916,000	7.0
Architect and engineering contractor	207,000	1.6
Construction expense	2,045,000	15.6
Contractor fees	678,000	5.2
Total indirect investment	3,846,000	29.4
Contingency	3,385,000	25.9
Total fixed investment	20,312,000	155.3
Other Capital Charges		
Allowance for startup and modifications	1,771,000	13.5
Interest during construction	2,437,000	18.6
Total depreciable investment	24,520,000	187.4
Land	514,000	3.9
Working capital	495,000	3.8
Total capital investment	25,529,000	195.1
	($128/kW)	

Basis
Evaluation represents project beginning mid-1977, ending mid-1980. Average cost basis for scaling, mid-1979.
Stack gas reheat to 175°F by indirect steam reheat.
Minimum in-process storage; only pumps are spared.
Disposal pond located 1 mile from power plant.
Investment requirements for fly ash removal and disposal excluded; FGD process investment estimate begins with common feed plenum downstream of the ESP.
Construction labor shortages with accompanying overtime pay incentive not considered.

TABLE A-5. LIMESTONE SLURRY PROCESS

ANNUAL REVENUE REQUIREMENTS

(Variation from base case: 200 MW)

	Annual quantity	Unit cost, $	Total annual cost, $	% of average annual revenue requirements
Direct Costs				
Delivered raw materials				
Limestone	65,500 tons	7.00/ton	458,500	6.42
Total raw materials cost			458,500	6.42
Conversion costs				
Operating labor and supervision	16,440 man-hr	12.50/man-hr	205,500	2.88
Utilities				
Steam	200,300 MBtu	2.00/MBtu	400,600	5.60
Process water	100,100 kgal	0.12/kgal	12,000	0.17
Electricity	22,512,000 kWh	0.031/kWh	697,900	9.76
Maintenance				
Labor and material			1,021,400	14.29
Analyses	1,980 man-hr	17.00/man-hr	33,700	0.47
Total conversion costs			2,371,100	33.17
Total direct costs			2,829,600	39.59
Indirect Costs				
Capital charges				
Depreciation, interim replacements, and insurance at 6.0% of total depreciable investment			1,471,200	20.58
Average cost of capital and taxes at 8.6% of total capital investment			2,195,500	30.72
Overheads				
Plant, 50% of conversion costs less utilities			630,300	8.82
Administrative, 10% of operating labor			20,600	0.29
Total indirect costs			4,317,600	60.41
Total annual revenue requirements			7,147,200	100.00

	Mills/kWh	$/ton coal burned	$/MBtu heat input	$/ton S removed
Equivalent unit revenue requirements	5.11	11.66	0.55	503

Basis
- Midwest plant location, 1980 revenue requirements.
- Remaining life of power plant, 30 yr.
- Power unit on-stream time, 7,000 hr/yr.
- Coal burned, 613,200 tons/yr, 9,200 Btu/kWh.
- Stack gas reheat to 175°F.
- Sulfur removed, 14,210 short tons/yr; solids disposal, 75,310 tons/yr calcium solids including only hydrate water.
- Investment and revenue requirement for removal and disposal of fly ash excluded.
- Total direct investment, $13,081,000; total depreciable investment, $24,520,000; and total capital investment, $25,529,000.
- All tons shown are 2,000 lb.

TABLE A-6

LIMESTONE SLURRY PROCESS VARIATION FROM BASE CASE: 200 MW REGULATED CO. ECONOMICS

TOTAL CAPITAL INVESTMENT 25529000

YEARS AFTER POWER UNIT START	ANNUAL OPERATION, KW-HR/KW	POWER UNIT HEAT REQUIREMENT, MILLION BTU /YEAR	POWER UNIT FUEL CONSUMPTION, TONS COAL /YEAR	SULFUR REMOVED BY POLLUTION CONTROL PROCESS, TONS/YEAR	BY-PRODUCT RATE, EQUIVALENT TONS/YEAR DRY SOLIDS	NET REVENUE, $/TON DRY SOLIDS	TOTAL OP. COST INCLUDING REGULATED ROI FOR POWER COMPANY, $/YEAR	TOTAL NET SALES REVENUE, $/YEAR	NET ANNUAL INCREASE (DECREASE) IN COST OF POWER, $	CUMULATIVE NET INCREASE (DECREASE) IN COST OF POWER, $
1	7000	12880000	613300	14200	75300	0.0	9343500	0	9343500	9343500
2	7000	12880000	613300	14200	75300	0.0	9202900	0	9202900	18546400
3	7000	12880000	613300	14200	75300	0.0	9062300	0	9062300	27608700
4	7000	12880000	613300	14200	75300	0.0	8921800	0	8921800	36530500
5	7000	12880000	613300	14200	75300	0.0	8781200	0	8781200	45311700
6	7000	12880000	613300	14200	75300	0.0	8640600	0	8640600	53952300
7	7000	12880000	613300	14200	75300	0.0	8500000	0	8500000	62452300
8	7000	12880000	613300	14200	75300	0.0	8359500	0	8359500	70811800
9	7000	12880000	613300	14200	75300	0.0	8218900	0	8218900	79030700
10	7000	12880000	613300	14200	75300	0.0	8078300	0	8078300	87109000
11	5000	9200000	438100	10200	53800	0.0	7143900	0	7143900	94252900
12	5000	9200000	438100	10200	53800	0.0	7003400	0	7003400	101256300
13	5000	9200000	438100	10200	53800	0.0	6862800	0	6862800	108119100
14	5000	9200000	438100	10200	53800	0.0	6722200	0	6722200	114841300
15	5000	9200000	438100	10200	53800	0.0	6581600	0	6581600	121422900
16	3500	6440000	306700	7100	37700	0.0	5807400	0	5807400	127230300
17	3500	6440000	306700	7100	37700	0.0	5666800	0	5666800	132897100
18	3500	6440000	306700	7100	37700	0.0	5526200	0	5526200	138423300
19	3500	6440000	306700	7100	37700	0.0	5385600	0	5385600	143808900
20	3500	6440000	306700	7100	37700	0.0	5245100	0	5245100	149054000
21	1500	2760000	131400	3000	16100	0.0	4158600	0	4158600	153212600
22	1500	2760000	131400	3000	16100	0.0	4018000	0	4018000	157230600
23	1500	2760000	131400	3000	16100	0.0	3877400	0	3877400	161108000
24	1500	2760000	131400	3000	16100	0.0	3736800	0	3736800	164844800
25	1500	2760000	131400	3000	16100	0.0	3596300	0	3596300	168441100
26	1500	2760000	131400	3000	16100	0.0	3455700	0	3455700	171896800
27	1500	2760000	131400	3000	16100	0.0	3315100	0	3315100	175211900
28	1500	2760000	131400	3000	16100	0.0	3174500	0	3174500	178386400
29	1500	2760000	131400	3000	16100	0.0	3034000	0	3034000	181420400
30	1500	2760000	131400	3000	16100	0.0	2893400	0	2893400	184313800
TOT	127500	234600000	11171000	258500	1371500		184313800	0	184313800	

LIFETIME AVERAGE INCREASE (DECREASE) IN UNIT OPERATING COST

DOLLARS PER TON OF COAL BURNED	16.50	0.0	16.50
MILLS PER KILOWATT-HOUR	7.23	0.0	7.23
CENTS PER MILLION BTU HEAT INPUT	78.57	0.0	78.57
DOLLARS PER TON OF SULFUR REMOVED	713.01	0.0	713.01

PROCESS COST DISCOUNTED AT 11.2% TO INITIAL YEAR, DOLLARS 67050900 0 67050900

LEVELIZED INCREASE (DECREASE) IN UNIT OPERATING COST EQUIVALENT TO DISCOUNTED PROCESS COST OVER LIFE OF POWER UNIT

DOLLARS PER TON OF COAL BURNED	15.03	0.0	15.03
MILLS PER KILOWATT-HOUR	6.59	0.0	6.59
CENTS PER MILLION BTU HEAT INPUT	71.58	0.0	71.58
DOLLARS PER TON OF SULFUR REMOVED	649.09	0.0	649.09

TABLE A-7. LIMESTONE SLURRY PROCESS

SUMMARY OF ESTIMATED CAPITAL INVESTMENT

(Variation from base case: 500-MW existing)

	Investment, $	% of total direct investment
Direct Investment		
Materials handling (hoppers, feeders, conveyors, elevators, bins, shaker, and puller)	1,944,000	7.2
Feed preparation (feeders, crushers, ball mills, hoists, tanks, agitators, and pumps)	1,899,000	7.0
Gas handling (common feed plenum and booster fans, gas ducts and dampers from plenum to absorber, exhaust gas ducts and dampers from reheater and stack)	5,111,000	18.9
SO_2 absorption (four mobile-bed scrubbers including presaturator and entrainment spearators, recirculation tanks, agitators, and pumps)	9,512,000	35.2
Stack gas reheat (four indirect steam reheaters)	1,312,000	4.9
Solids disposal (onsite disposal, slurry disposal pumps, and pond water return pumps)	1,857,000	6.9
Subtotal	21,635,000	80.1
Services, utilities, and miscellaneous	1,298,000	4.8
Total process areas excluding pond construction	22,933,000	84.9
Pond construction	4,084,000	15.1
Total direct investment	27,017,000	100.0
Indirect Investment		
Engineering design and supervision	1,186,000	4.4
Architect and engineering contractor	267,000	1.0
Construction expense	3,784,000	14.0
Contractor fees	1,176,000	4.4
Total indirect investment	6,413,000	23.8
Contingency	6,686,000	24.7
Total fixed investment	40,116,000	148.5
Other Capital Charges		
Allowance for startup and modifications	3,603,000	13.3
Interest during construction	4,814,000	17.8
Total depreciable investment	48,533,000	179.6
Land	820,000	3.0
Working capital	1,053,000	3.9
Total capital investment	50,406,000	186.5
	($101/kW)	

Basis
- Evaluation represents project beginning mid-1977, ending mid-1980. Average cost basis for scaling, mid-1979.
- Stack gas reheat to 175°F by indirect steam reheat.
- Minimum in-process storage; only pumps are spared.
- Disposal pond located 1 mile from power plant.
- Investment requirements for fly ash removal and disposal excluded; FGD process investment estimate begins with common feed plenum downstream of the ESP.
- Construction labor shortages with accompanying overtime pay incentive not considered.

TABLE A-8. LIMESTONE SLURRY PROCESS

ANNUAL REVENUE REQUIREMENTS

(Variation from base case: 500-MW existing)

	Annual quantity	Unit cost, $	Total annual cost, $	% of average annual revenue requirements
Direct Costs				
Delivered raw materials				
Limestone	163,100 tons	7.00/ton	1,141,700	7.73
Total raw materials cost			1,141,700	7.73
Conversion costs				
Operating labor and supervision	25,990 man-hr	12.50/man-hr	324,900	2.20
Utilities				
Steam	500,700 MBtu	2.00/MBtu	1,001,400	6.78
Process water	250,100 kgal	0.12/kgal	30,000	0.20
Electricity	55,377,000 kWh	0.029/kWh	1,605,900	10.87
Maintenance				
Labor and material			1,957,200	13.25
Analyses	3,760 man-hr	17.00/man-hr	63,900	0.43
Total conversion costs			4,983,300	33.73
Total direct costs			6,125,000	41.46
Indirect Costs				
Capital charges				
Depreciation, interim replacements, and insurance at 6.4% of total depreciable investment			3,106,100	21.03
Average cost of capital and taxes at 8.6% of total capital investment			4,334,900	29.35
Overheads				
Plant, 50% of conversion costs less utilities			1,173,000	7.94
Administrative, 10% of operating labor			32,500	0.22
Total indirect costs			8,646,500	58.54
Total annual revenue requirements			14,771,500	100.00

	Mills/kWh	$/ton coal burned	$/MBtu heat input	$/ton S removed
Equivalent unit revenue requirements	4.22	9.63	0.46	416

Basis
- Midwest plant location, 1980 revenue requirements.
- Remaining life of power plant, 25 yr.
- Power unit on-stream time, 7,000 hr/yr.
- Coal burned, 1,533,350 tons/yr, 9,200 Btu/kWh.
- Stack gas reheat to 175°F.
- Sulfur removed, 35,530 short tons/yr; solids disposal, 188,300 tons/yr calcium solids including only hydrate water.
- Investment and revenue requirement for removal and disposal of fly ash excluded.
- Total direct investment, $27,017,000; total depreciable investment, $48,533,000; and total capital investment, $50,406,000.
- All tons shown are 2,000 lb.

TABLE A-9

LIMESTONE SLURRY PROCESS VARIATION FROM BASE CASE: 500 MW EXISTING ,REGULATED CO. ECONOMICS

TOTAL CAPITAL INVESTMENT 50406000

YEARS AFTER POWER UNIT START	ANNUAL OPERATION, KW-HR/KW	POWER UNIT HEAT REQUIREMENT, MILLION BTU /YEAR	POWER UNIT FUEL CONSUMPTION, TONS COAL /YEAR	SULFUR REMOVED BY POLLUTION CONTROL PROCESS, TONS/YEAR	BY-PRODUCT RATE, EQUIVALENT TONS/YEAR DRY SOLIDS	NET REVENUE, $/TON DRY SOLIDS	TOTAL UP. COST INCLUDING REGULATED ROI FOR POWER COMPANY, $/YEAR	TOTAL NET SALES REVENUE, $/YEAR	NET ANNUAL INCREASE (DECREASE) IN COST OF POWER, $	CUMULATIVE NET INCREASE (DECREASE) IN COST OF POWER, $
1										
2										
3										
4										
5										
6	7000	32200000	1533300	35500	188300	0.0	19431600	0	19431600	19431600
7	7000	32200000	1533300	35500	188300	0.0	19097700	0	19097700	38529300
8	7000	32200000	1533300	35500	188300	0.0	18763800	0	18763800	57293100
9	7000	32200000	1533300	35500	188300	0.0	18429900	0	18429900	75723000
10	7000	32200000	1533300	35500	188300	0.0	18096000	0	18096000	93819000
11	5000	23000000	1095200	25400	134500	0.0	16038000	0	16038000	109857000
12	5000	23000000	1095200	25400	134500	0.0	15704100	0	15704100	125561100
13	5000	23000000	1095200	25400	134500	0.0	15370200	0	15370200	140931300
14	5000	23000000	1095200	25400	134500	0.0	15036300	0	15036300	155967600
15	5000	23000000	1095200	25400	134500	0.0	14702400	0	14702400	170670000
16	3500	16100000	766700	17800	94200	0.0	13004100	0	13004100	183674100
17	3500	16100000	766700	17800	94200	0.0	12670200	0	12670200	196344300
18	3500	16100000	766700	17800	94200	0.0	12336300	0	12336300	208680600
19	3500	16100000	766700	17800	94200	0.0	12002400	0	12002400	220683000
20	3500	16100000	766700	17800	94200	0.0	11668500	0	11668500	232351500
21	1500	6900000	328600	7600	40400	0.0	9328500	0	9328500	241680000
22	1500	6900000	328600	7600	40400	0.0	8994600	0	8994600	250674600
23	1500	6900000	328600	7600	40400	0.0	8660700	0	8660700	259335300
24	1500	6900000	328600	7600	40400	0.0	8326800	0	8326800	267662100
25	1500	6900000	328600	7600	40400	0.0	7992900	0	7992900	275655000
26	1500	6900000	328600	7600	40400	0.0	7659000	0	7659000	283314000
27	1500	6900000	328600	7600	40400	0.0	7325100	0	7325100	290639100
28	1500	6900000	328600	7600	40400	0.0	6991200	0	6991200	297630300
29	1500	6900000	328600	7600	40400	0.0	6657200	0	6657200	304287500
30	1500	6900000	328600	7600	40400	0.0	6323300	0	6323300	310610800
TOT	92500	425500000	20262000	469500	2489000		310610800	0	310610800	

LIFETIME AVERAGE INCREASE (DECREASE) IN UNIT OPERATING COST

DOLLARS PER TON OF COAL BURNED	15.33	0.0	15.33
MILLS PER KILOWATT-HOUR	6.72	0.0	6.72
CENTS PER MILLION BTU HEAT INPUT	73.00	0.0	73.00
DOLLARS PER TON OF SULFUR REMOVED	661.58	0.0	661.58
PROCESS COST DISCOUNTED AT 11.2% TO INITIAL YEAR, DOLLARS	128076700	0	128076700

LEVELIZED INCREASE (DECREASE) IN UNIT OPERATING COST EQUIVALENT TO DISCOUNTED PROCESS COST OVER LIFE OF POWER UNIT

DOLLARS PER TON OF COAL BURNED	13.66	0.0	13.66
MILLS PER KILOWATT-HOUR	5.99	0.0	5.99
CENTS PER MILLION BTU HEAT INPUT	65.07	0.0	65.07
DOLLARS PER TON OF SULFUR REMOVED	589.94	0.0	589.94

TABLE A-10. LIMESTONE SLURRY PROCESS

SUMMARY OF ESTIMATED CAPITAL INVESTMENT

(Variation from base case: 2% sulfur)

	Investment, $	% of total direct investment
Direct Investment		
Materials handling (hoppers, feeders, conveyors, elevators, bins, shaker, and puller)	979,000	4.7
Feed preparation (feeders, crushers, ball mills, hoists, tanks, agitators, and pumps)	1,195,000	5.7
Gas handling (common feed plenum and booster fans, gas ducts and dampers from plenum to absorber, exhaust gas ducts and dampers from reheater and stack)	4,120,000	19.6
SO_2 absorption (four mobile-bed scrubbers including presaturator and entrainment spearators, recirculation tanks, agitators, and pumps)	8,346,000	39.7
Stack gas reheat (four indirect steam reheaters)	1,222,000	5.8
Solids disposal (onsite disposal, slurry disposal pumps, and pond water return pumps)	1,317,000	6.3
Subtotal	17,172,000	81.8
Services, utilities, and miscellaneous	1,030,000	4.9
Total process areas excluding pond construction	18,202,000	86.7
Pond construction	2,800,000	13.3
Total direct investment	21,002,000	100.0
Indirect Investment		
Engineering design and supervision	1,142,000	5.4
Architect and engineering contractor	263,000	1.3
Construction expense	3,084,000	14.7
Contractor fees	971,000	4.6
Total indirect investment	5,460,000	26.0
Contingency	5,292,000	25.2
Total fixed investment	31,754,000	151.2
Other Capital Charges		
Allowance for startup and modifications	2,895,000	13.8
Interest during construction	3,811,000	18.1
Total depreciable investment	38,460,000	183.1
Land	563,000	2.7
Working capital	825,000	3.9
Total capital investment	39,848,000	189.7
	($80/kW)	

Basis
- Evaluation represents project beginning mid-1977, ending mid-1980. Average cost basis for scaling, mid-1979.
- Stack gas reheat to 175°F by indirect steam reheat.
- Minimum in-process storage; only pumps are spared.
- Disposal pond located 1 mile from power plant.
- Investment requirements for fly ash removal and disposal excluded; FGD process investment estimate begins with common feed plenum downstream of the ESP.
- Construction labor shortages with accompanying overtime pay incentive not considered.

TABLE A-11. LIMESTONE SLURRY PROCESS

ANNUAL REVENUE REQUIREMENTS

(Variation from base case: 2.0% sulfur)

	Annual quantity	Unit cost, $	Total annual cost, $	% of average annual revenue requirements
Direct Costs				
Delivered raw materials				
Limestone	75,300 tons	7.00/ton	527,100	4.53
Total raw materials cost			527,100	4.53
Conversion costs				
Operating labor and supervision	23,280 man-hr	12.50/man-hr	291,000	2.50
Utilities				
Steam	488,500 MBtu	2.00/MBtu	977,000	8.40
Process water	205,000 kgal	0.12/kgal	24,600	0.21
Electricity	52,141,000 kWh	0.029/kWh	1,512,100	12.99
Maintenance				
Labor and material			1,540,200	13.24
Analyses	3,370 man-hr	17.00/man-hr	57,300	0.49
Total conversion costs			4,402,200	37.83
Total direct costs			4,929,300	42.36
Indirect Costs				
Capital charges				
Depreciation, interim replacements, and insurance at 6.0% of total depreciable investment			2,307,600	19.83
Average cost of capital and taxes at 8.6% of total capital investment			3,426,900	29.45
Overheads				
Plant, 50% of conversion costs less utilities			944,300	8.11
Administrative, 10% of operating labor			29,100	0.25
Total indirect costs			6,707,900	57.64
Total annual revenue requirements			11,637,200	100.00

	Mills/kWh	$/ton coal burned	$/MBtu heat input	$/ton S removed
Equivalent unit revenue requirements	3.32	7.76	0.37	725

Basis
- Midwest plant location, 1980 revenue requirements.
- Remaining life of power plant, 30 yr.
- Power unit on-stream time, 7,000 hr/yr.
- Coal burned, 1,500,100 tons/yr, 9,000 Btu/kWh.
- Stack gas reheat to 175°F.
- Sulfur removed, 16,050 short tons/yr; solids disposal, 85,260 tons/yr calcium solids including only hydrate water.
- Investment and revenue requirement for removal and disposal of fly ash excluded.
- Total direct investment, $21,002,000; total depreciable investment, $38,460,000; and total capital investment, $39,848,000.
- All tons shown are 2,000 lb.

TABLE A-12

LIMESTONE SLURRY PROCESS VARIATION FROM BASE CASE: 2.0% S REGULATED CO. ECONOMICS

TOTAL CAPITAL INVESTMENT 39848000

YEARS AFTER POWER UNIT START	ANNUAL OPERATION, KW-HR/KW	POWER UNIT HEAT REQUIREMENT, MILLION BTU/YEAR	POWER UNIT FUEL CONSUMPTION, TONS COAL/YEAR	SULFUR REMOVED BY POLLUTION CONTROL PROCESS, TONS/YEAR	BY-PRODUCT RATE, EQUIVALENT TONS/YEAR DRY SOLIDS	NET REVENUE, $/TON DRY SOLIDS	TOTAL OP. COST INCLUDING REGULATED ROI FOR POWER COMPANY, $/YEAR	TOTAL NET SALES REVENUE, $/YEAR	NET ANNUAL INCREASE (DECREASE) IN COST OF POWER, $	CUMULATIVE NET INCREASE (DECREASE) IN COST OF POWER, $
1	7000	31500000	1500000	16100	85300	0.0	15065500	0	15065500	15065500
2	7000	31500000	1500000	16100	85300	0.0	14845000	0	14845000	29910500
3	7000	31500000	1500000	16100	85300	0.0	14624400	0	14624400	44534900
4	7000	31500000	1500000	16100	85300	0.0	14403900	0	14403900	58938800
5	7000	31500000	1500000	16100	85300	0.0	14183400	0	14183400	73122200
6	7000	31500000	1500000	16100	85300	0.0	13962900	0	13962900	87085100
7	7000	31500000	1500000	16100	85300	0.0	13742400	0	13742400	100827500
8	7000	31500000	1500000	16100	85300	0.0	13521900	0	13521900	114349400
9	7000	31500000	1500000	16100	85300	0.0	13301400	0	13301400	127650800
10	7000	31500000	1500000	16100	85300	0.0	13080900	0	13080900	140731700
11	5000	22500000	1071400	11500	60900	0.0	11472500	0	11472500	152204200
12	5000	22500000	1071400	11500	60900	0.0	11252000	0	11252000	163456200
13	5000	22500000	1071400	11500	60900	0.0	11031500	0	11031500	174487700
14	5000	22500000	1071400	11500	60900	0.0	10811000	0	10811000	185298700
15	5000	22500000	1071400	11500	60900	0.0	10590500	0	10590500	195889200
16	3500	15750000	750000	8000	42600	0.0	9272000	0	9272000	205161200
17	3500	15750000	750000	8000	42600	0.0	9051500	0	9051500	214212700
18	3500	15750000	750000	8000	42600	0.0	8831000	0	8831000	223043700
19	3500	15750000	750000	8000	42600	0.0	8610500	0	8610500	231654200
20	3500	15750000	750000	8000	42600	0.0	8390000	0	8390000	240044200
21	1500	6750000	321400	3400	18300	0.0	6555200	0	6555200	246599400
22	1500	6750000	321400	3400	18300	0.0	6334700	0	6334700	252934100
23	1500	6750000	321400	3400	18300	0.0	6114200	0	6114200	259048300
24	1500	6750000	321400	3400	18300	0.0	5893700	0	5893700	264942000
25	1500	6750000	321400	3400	18300	0.0	5673200	0	5673200	270615200
26	1500	6750000	321400	3400	18300	0.0	5452700	0	5452700	276067900
27	1500	6750000	321400	3400	18300	0.0	5232200	0	5232200	281300100
28	1500	6750000	321400	3400	18300	0.0	5011600	0	5011600	286311700
29	1500	6750000	321400	3400	18300	0.0	4791100	0	4791100	291102800
30	1500	6750000	321400	3400	18300	0.0	4570600	0	4570600	295673400
TOT 127500		573750000	27321000	292500	1553500		295673400	0	295673400	
LIFETIME AVERAGE INCREASE (DECREASE) IN UNIT OPERATING COST										
DOLLARS PER TON OF COAL BURNED							10.82	0.0	10.82	
MILLS PER KILOWATT-HOUR							4.64	0.0	4.64	
CENTS PER MILLION BTU HEAT INPUT							51.53	0.0	51.53	
DOLLARS PER TON OF SULFUR REMOVED							1010.85	0.0	1010.85	
PROCESS COST DISCOUNTED AT 11.2% TO INITIAL YEAR, DOLLARS							108049100	0	108049100	
LEVELIZED INCREASE (DECREASE) IN UNIT OPERATING COST EQUIVALENT TO DISCOUNTED PROCESS COST OVER LIFE OF POWER UNIT										
DOLLARS PER TON OF COAL BURNED							9.90	0.0	9.90	
MILLS PER KILOWATT-HOUR							4.24	0.0	4.24	
CENTS PER MILLION BTU HEAT INPUT							47.17	0.0	47.17	
DOLLARS PER TON OF SULFUR REMOVED							923.50	0.0	923.50	

TABLE A-13. LIMESTONE SLURRY PROCESS

SUMMARY OF ESTIMATED CAPITAL INVESTMENT

(Base case: 500 MW, 3.5% sulfur)

	Investment, $	% of total direct investment
Direct Investment		
Materials handling (hoppers, feeders, conveyors, elevators, bins, shaker, and puller)	1,767,000	6.8
Feed preparation (feeders, crushers, ball mills, hoists, tanks, agitators, and pumps)	1,758,000	6.7
Gas handling (common feed plenum and booster fans, gas ducts and dampers from plenum to absorber, exhaust gas ducts and dampers from reheater and stack)	4,318,000	16.5
SO_2 absorption (four mobile-bed scrubbers including presaturator and entrainment separators, recirculation tanks, agitators, and pumps)	8,974,000	34.4
Stack gas reheat (four indirect steam reheaters)	1,282,000	4.9
Solids disposal (onsite disposal, slurry disposal pumps, and pond water return pumps)	1,688,000	6.5
Subtotal	19,787,000	75.8
Services, utilities, and miscellaneous	1,187,000	4.5
Total process areas excluding pond construction	20,974,000	80.3
Pond construction	5,145,000	19.7
Total direct investment	26,119,000	100.0
Indirect Investment		
Engineering design and supervision	1,218,000	4.7
Architect and engineering contractor	270,000	1.0
Construction expense	3,632,000	13.9
Contractor fees	1,146,000	4.4
Total indirect investment	6,266,000	24.0
Contingency	6,477,000	24.8
Total fixed investment	38,862,000	148.8
Other Capital Charges		
Allowance for startup and modifications	3,372,000	12.9
Interest during construction	4,664,000	17.9
Total depreciable investment	46,898,000	179.6
Land	1,030,000	3.9
Working capital	1,015,000	3.9
Total capital investment	48,943,000	187.4
	($98/kW)	

Basis
Evaluation represents project beginning mid-1977, ending mid-1980. Average cost basis for scaling, mid-1979.
Stack gas reheat to 175°F by indirect steam reheat.
Minimum in-process storage; only pumps are spared.
Disposal pond located 1 mile from power plant.
Investment requirements for fly ash removal and disposal excluded; FGD process investment estimate begins with common feed plenum downstream of the ESP.
Construction labor shortages with accompanying overtime pay incentive not considered.

TABLE A-14. LIMESTONE SLURRY PROCESS

ANNUAL REVENUE REQUIREMENTS

(Base case: 500 MW, 3.5% sulfur)

	Annual quantity	Unit cost, $	Total annual cost, $	% of average annual revenue requirements
Direct Costs				
Delivered raw materials				
Limestone	159,300 tons	7.00/ton	1,115,100	7.92
Total raw materials cost			1,115,100	7.92
Conversion costs				
Operating labor and supervision	25,990 man-hr	12.50/man-hr	324,900	2.31
Utilities				
Steam	489,800 MBtu	2.00/MBtu	979,600	6.96
Process water	243,400 kgal	0.12/kgal	29,200	0.21
Electricity	54,188,000 kWh	0.029/kWh	1,571,500	11.15
Maintenance				
Labor and material			1,832,300	13.01
Analyses	3,760 man-hr	17.00/man-hr	63,900	0.45
Total conversion costs			4,801,400	34.09
Total direct costs			5,916,500	42.01
Indirect Costs				
Capital charges				
Depreciation, interim replacements, and insurance at 6.0% of total depreciable investment			2,813,900	19.98
Average cost of capital and taxes at 8.6% of total capital investment			4,209,100	29.89
Overheads				
Plant, 50% of conversion costs less utilities			1,110,600	7.89
Administrative, 10% of operating labor			32,500	0.23
Total indirect costs			8,166,100	57.99
Total annual revenue requirements			14,082,600	100.00

	Mills/kWh	$/ton coal burned	$/MBtu heat input	$/ton S removed
Equivalent unit revenue requirements	4.02	9.39	0.45	405

Basis
- Midwest plant location, 1980 revenue requirements.
- Remaining life of power plant, 30 yr.
- Power unit on-stream time, 7,000 hr/yr.
- Coal burned, 1,500,100 tons/yr, 9,000 Btu/kWh.
- Stack gas reheat to 175°F.
- Sulfur removed, 34,750 short tons/yr; solids disposal, 184,200 tons/yr calcium solids including only hydrate water.
- Investment and revenue requirement for removal and disposal of fly ash excluded.
- Total direct investment, $26,119,000; total depreciable investment, $46,898,000; and total capital investment, $48,943,000.
- All tons shown are 2,000 lb.

TABLE A-15

LIMESTONE SLURRY PROCESS BASE CASE: 500 MW 3.5% S REGULATED CO. ECONOMICS

TOTAL CAPITAL INVESTMENT 4854300

YEARS AFTER POWER UNIT START	ANNUAL OPERATION, KW-HR/KW	POWER UNIT HEAT REQUIREMENT, MILLION BTU /YEAR	POWER UNIT FUEL CONSUMPTION, TONS COAL /YEAR	SULFUR REMOVED BY POLLUTION CONTROL PROCESS, TONS/YEAR	BY-PRODUCT RATE, EQUIVALENT TONS/YEAR DRY SOLIDS	NET REVENUE, $/TON DRY SOLIDS	TOTAL OP. COST INCLUDING REGULATED ROI FOR POWER COMPANY, $/YEAR	TOTAL NET SALES REVENUE, $/YEAR	NET ANNUAL INCREASE (DECREASE) IN COST OF POWER, $	CUMULATIVE NET INCREASE (DECREASE) IN COST OF POWER, $
1	7000	31500000	1500000	34800	184200	0.0	18293300	0	18293300	18293300
2	7000	31500000	1500000	34800	184200	0.0	18024400	0	18024400	36317700
3	7000	31500000	1500000	34800	184200	0.0	17755500	0	17755500	54073200
4	7000	31500000	1500000	34800	184200	0.0	17486600	0	17486600	71559800
5	7000	31500000	1500000	34800	184200	0.0	17217700	0	17217700	88777500
6	7000	31500000	1500000	34800	184200	0.0	16948900	0	16948900	105726400
7	7000	31500000	1500000	34800	184200	0.0	16680000	0	16680000	122406400
8	7000	31500000	1500000	34800	184200	0.0	16411100	0	16411100	138817500
9	7000	31500000	1500000	34800	184200	0.0	16142200	0	16142200	154959700
10	7000	31500000	1500000	34800	184200	0.0	15873300	0	15873300	170833000
11	5000	22500000	1071400	24900	131600	0.0	13938300	0	13938300	184771300
12	5000	22500000	1071400	24900	131600	0.0	13669400	0	13669400	198440700
13	5000	22500000	1071400	24900	131600	0.0	13400500	0	13400500	211841200
14	5000	22500000	1071400	24900	131600	0.0	13131700	0	13131700	224972900
15	5000	22500000	1071400	24900	131600	0.0	12862800	0	12862800	237835700
16	3500	15750000	750000	17400	92100	0.0	11276900	0	11276900	249112600
17	3500	15750000	750000	17400	92100	0.0	11008000	0	11008000	260120600
18	3500	15750000	750000	17400	92100	0.0	10739100	0	10739100	270859700
19	3500	15750000	750000	17400	92100	0.0	10470200	0	10470200	281329900
20	3500	15750000	750000	17400	92100	0.0	10201300	0	10201300	291531200
21	1500	6750000	321400	7500	39500	0.0	7999600	0	7999600	299530800
22	1500	6750000	321400	7500	39500	0.0	7730800	0	7730800	307261600
23	1500	6750000	321400	7500	39500	0.0	7461900	0	7461900	314723500
24	1500	6750000	321400	7500	39500	0.0	7193000	0	7193000	321916500
25	1500	6750000	321400	7500	39500	0.0	6924100	0	6924100	328840600
26	1500	6750000	321400	7500	39500	0.0	6655200	0	6655200	335495800
27	1500	6750000	321400	7500	39500	0.0	6386300	0	6386300	341882100
28	1500	6750000	321400	7500	39500	0.0	6117400	0	6117400	347999500
29	1500	6750000	321400	7500	39500	0.0	5848500	0	5848500	353848000
30	1500	6750000	321400	7500	39500	0.0	5579700	0	5579700	359427700
TOT 127500		573750000	27321000	634500	3355500		359427700	0	359427700	
LIFETIME AVERAGE INCREASE (DECREASE) IN UNIT OPERATING COST										
		DOLLARS PER TON OF COAL BURNED					13.16	0.0	13.16	
		MILLS PER KILOWATT-HOUR					5.64	0.0	5.64	
		CENTS PER MILLION BTU HEAT INPUT					62.65	0.0	62.65	
		DOLLARS PER TON OF SULFUR REMOVED					566.47	0.0	566.47	
PROCESS COST DISCOUNTED AT 11.2% TO INITIAL YEAR, DOLLARS							131219500	0	131219500	
LEVELIZED INCREASE (DECREASE) IN UNIT OPERATING COST EQUIVALENT TO DISCOUNTED PROCESS COST OVER LIFE OF POWER UNIT										
		DOLLARS PER TON OF COAL BURNED					12.03	0.0	12.03	
		MILLS PER KILOWATT-HOUR					5.16	0.0	5.16	
		CENTS PER MILLION BTU HEAT INPUT					57.28	0.0	57.28	
		DOLLARS PER TON OF SULFUR REMOVED					518.24	0.0	518.24	

TABLE A-16. LIMESTONE SLURRY PROCESS

SUMMARY OF ESTIMATED CAPITAL INVESTMENT

(Variation from base case: 5% sulfur)

	Investment, $	% of total direct investment
Direct Investment		
Materials handling (hoppers, feeders, conveyors, elevators, bins, shaker, and puller)	1,944,000	6.6
Feed preparation (feeders, crushers, ball mills, hoists, tanks, agitators, and pumps)	2,057,000	7.0
Gas handling (common feed plenum and booster fans, gas ducts and dampers from plenum to absorber, exhaust gas ducts and dampers from reheater and stack)	4,327,000	14.7
SO_2 absorption (four mobile-bed scrubbers including presaturator and entrainment separators, recirculation tanks, agitators, and pumps)	8,974,000	30.6
Stack gas reheat (four indirect steam reheaters)	1,283,000	4.4
Solids disposal (onsite disposal, slurry disposal pumps, and pond water return pumps)	1,992,000	6.8
Subtotal	20,577,000	70.1
Services, utilities, and miscellaneous	1,235,000	4.2
Total process areas excluding pond construction	21,812,000	74.3
Pond construction	7,553,000	25.7
Total direct investment	29,365,000	100.0
Indirect Investment		
Engineering design and supervision	1,285,000	4.4
Architect and engineering contractor	277,000	0.9
Construction expense	3,925,000	13.4
Contractor fees	1,253,000	4.3
Total indirect investment	6,740,000	23.0
Contingency	7,221,000	24.6
Total fixed investment	43,326,000	147.6
Other Capital Charges		
Allowance for startup and modifications	3,577,000	12.2
Interest during construction	5,199,000	17.7
Total depreciable investment	52,102,000	177.5
Land	1,511,000	5.1
Working capital	1,184,000	4.0
Total capital investment	54,797,000	186.6
	($110/kW)	

Basis
Evaluation represents project beginning mid-1977, ending mid-1980. Average cost basis for scaling, mid-1979.
Stack gas reheat to 175°F by indirect steam reheat.
Minimum in-process storage; only pumps are spared.
Disposal pond located 1 mile from power plant.
Investment requirements for fly ash removal and disposal excluded; FGD process investment estimate begins with common feed plenum downstream of the ESP.
Construction labor shortages with accompanying overtime pay incentive not considered.

TABLE A-17. LIMESTONE SLURRY PROCESS

ANNUAL REVENUE REQUIREMENTS

(Variation from base case: 5.0% sulfur)

	Annual quantity	Unit cost, $	Total annual cost, $	% of average annual revenue requirements
Direct Costs				
Delivered raw materials				
Limestone	244,700 tons	7.00/ton	1,712,900	10.77
Total raw materials cost			1,712,900	10.77
Conversion costs				
Operating labor and supervision	27,910 man-hr	12.50/man-hr	348,900	2.20
Utilities				
Steam	531,900 MBtu	2.00/MBtu	1,063,800	6.69
Process water	283,200 kgal	0.12/kgal	34,000	0.21
Electricity	56,227,000 kWh	0.029/kWh	1,630,600	10.26
Maintenance				
Labor and material			1,971,600	12.40
Analyses	4,040 man-hr	17.00/man-hr	68,700	0.43
Total conversion costs			5,117,600	32.19
Total direct costs			6,830,500	42.96
Indirect Costs				
Capital charges				
Depreciation, interim replacements, and insurance at 6.0% of total depreciable investment			3,126,100	19.66
Average cost of capital and taxes at 8.6% of total capital investment			4,712,500	29.64
Overheads				
Plant, 50% of conversion costs less utilities			1,194,600	7.52
Administrative, 10% of operating labor			34,900	0.22
Total indirect costs			9,068,100	57.04
Total annual revenue requirements			15,898,600	100.00

	Mills/kWh	$/ton coal burned	$/MBtu heat input	$/ton S removed
Equivalent unit revenue requirements	4.54	10.60	0.50	296

Basis
- Midwest plant location, 1980 revenue requirements.
- Remaining life of power plant, 30 yr.
- Power unit on-stream time, 7,000 hr/yr.
- Coal burned, 1,500,100 tons/yr, 9,000 Btu/kWh.
- Stack gas reheat to 175°F.
- Sulfur removed, 53,730 short tons/yr; solids disposal, 285,140 tons/yr calcium solids including only hydrate water.
- Investment and revenue requirement for removal and disposal of fly ash excluded.
- Total direct investment, $29,365,000; total depreciable investment, $52,102,000; and total capital investment, $54,797,000.
- All tons shown are 2,000 lb.

TABLE A-18

LIMESTONE SLURRY PROCESS VARIATION FROM BASE CASE: 5.0% S REGULATED CO. ECONOMICS

TOTAL CAPITAL INVESTMENT $94797000

YEARS AFTER POWER UNIT START	ANNUAL OPERATION, KW-HR/KW	POWER UNIT HEAT REQUIREMENT, MILLION BTU/YEAR	POWER UNIT FUEL CONSUMPTION, TONS COAL/YEAR	SULFUR REMOVED BY POLLUTION CONTROL PROCESS, TONS/YEAR	BY-PRODUCT RATE, EQUIVALENT TONS/YEAR DRY SOLIDS	NET REVENUE, $/TON DRY SOLIDS	TOTAL OP. COST INCLUDING REGULATED ROI FOR POWER COMPANY, $/YEAR	TOTAL NET SALES REVENUE, $/YEAR	NET ANNUAL INCREASE (DECREASE) IN COST OF POWER, $	CUMULATIVE NET INCREASE (DECREASE) IN COST OF POWER, $
1	7000	31500000	1500000	53700	285100	0.0	20612900	0	20612900	20612900
2	7000	31500000	1500000	53700	285100	0.0	20314200	0	20314200	40927100
3	7000	31500000	1500000	53700	285100	0.0	20015500	0	20015500	60942600
4	7000	31500000	1500000	53700	285100	0.0	19716700	0	19716700	80659300
5	7000	31500000	1500000	53700	285100	0.0	19418000	0	19418000	100077300
6	7000	31500000	1500000	53700	285100	0.0	19119300	0	19119300	119196600
7	7000	31500000	1500000	53700	285100	0.0	18820600	0	18820600	138017200
8	7000	31500000	1500000	53700	285100	0.0	18521900	0	18521900	156539100
9	7000	31500000	1500000	53700	285100	0.0	18223200	0	18223200	174762300
10	7000	31500000	1500000	53700	285100	0.0	17924500	0	17924500	192686800
11	5000	22500000	1071400	38400	203700	0.0	15700400	0	15700400	208387200
12	5000	22500000	1071400	38400	203700	0.0	15401600	0	15401600	223788800
13	5000	22500000	1071400	38400	203700	0.0	15102900	0	15102900	238891700
14	5000	22500000	1071400	38400	203700	0.0	14804200	0	14804200	253695900
15	5000	22500000	1071400	38400	203700	0.0	14505500	0	14505500	268201400
16	3500	15750000	750000	26900	142600	0.0	12690200	0	12690200	280891600
17	3500	15750000	750000	26900	142600	0.0	12391500	0	12391500	293283100
18	3500	15750000	750000	26900	142600	0.0	12092800	0	12092800	305375900
19	3500	15750000	750000	26900	142600	0.0	11794100	0	11794100	317170000
20	3500	15750000	750000	26900	142600	0.0	11495300	0	11495300	328665300
21	1500	6750000	321400	11500	61100	0.0	8984500	0	8984500	337649800
22	1500	6750000	321400	11500	61100	0.0	8685800	0	8685800	346335600
23	1500	6750000	321400	11500	61100	0.0	8387100	0	8387100	354722700
24	1500	6750000	321400	11500	61100	0.0	8088400	0	8088400	362811100
25	1500	6750000	321400	11500	61100	0.0	7789700	0	7789700	370600800
26	1500	6750000	321400	11500	61100	0.0	7491000	0	7491000	378091800
27	1500	6750000	321400	11500	61100	0.0	7192300	0	7192300	385284100
28	1500	6750000	321400	11500	61100	0.0	6893500	0	6893500	392177600
29	1500	6750000	321400	11500	61100	0.0	6594800	0	6594800	398772400
30	1500	6750000	321400	11500	61100	0.0	6296100	0	6296100	405068500
TOT 127500		573750000	27321000	978500	5193500		405068500	0	405068500	
LIFETIME AVERAGE INCREASE (DECREASE) IN UNIT OPERATING COST										
DOLLARS PER TON OF COAL BURNED							14.83	0.0	14.83	
MILLS PER KILOWATT-HOUR							6.35	0.0	6.35	
CENTS PER MILLION BTU HEAT INPUT							70.60	0.0	70.60	
DOLLARS PER TON OF SULFUR REMOVED							413.97	0.0	413.97	
PROCESS COST DISCOUNTED AT 11.2% TO INITIAL YEAR, DOLLARS							147935400	0	147935400	
LEVELIZED INCREASE (DECREASE) IN UNIT OPERATING COST EQUIVALENT TO DISCOUNTED PROCESS COST OVER LIFE OF POWER UNIT										
DOLLARS PER TON OF COAL BURNED							13.56	0.0	13.56	
MILLS PER KILOWATT-HOUR							5.81	0.0	5.81	
CENTS PER MILLION BTU HEAT INPUT							64.58	0.0	64.58	
DOLLARS PER TON OF SULFUR REMOVED							378.74	0.0	378.74	

TABLE A-19. LIMESTONE SLURRY PROCESS

SUMMARY OF ESTIMATED CAPITAL INVESTMENT

(Variation from base case: 1,000-MW existing)

	Investment, $	% of total direct investment
Direct Investment		
Materials handling (hoppers, feeders, conveyors, elevators, bins, shaker, and puller)	2,438,000	5.9
Feed preparation (feeders, crushers, ball mills, hoists, tanks, agitators, and pumps)	2,444,000	6.0
Gas handling (common feed plenum and booster fans, gas ducts and dampers from plenum to absorber, exhaust gas ducts and dampers from reheater and stack)	8,690,000	21.1
SO_2 absorption (four moible-bed scrubbers including presaturator and entrainment separators, recirculation tanks, agitators, and pumps)	14,358,000	34.9
Stack gas reheat (four indirect steam reheaters)	2,026,000	4.9
Solids disposal (onsite disposal, slurry disposal pumps, and pond water return pumps)	2,363,000	5.8
Subtotal	32,319,000	78.6
Services, utilities, and miscellaneous	1,939,000	4.7
Total process areas excluding pond construction	34,258,000	83.3
Pond construction	6,856,000	16.7
Total direct investment	41,114,000	100.0
Indirect Investment		
Engineering design and supervision	1,266,000	3.1
Architect and engineering contractor	275,000	0.7
Construction expense	5,339,000	13.0
Contractor fees	1,618,000	3.9
Total indirect investment	8,498,000	20.7
Contingency	9,923,000	24.1
Total fixed investment	59,535,000	144.8
Other Capital Charges		
Allowance for startup and modifications	5,268,000	12.8
Interest during construction	7,144,000	17.4
Total depreciable investment	71,947,000	175.0
Land	1,376,000	3.3
Working capital	1,752,000	4.3
Total capital investment	75,075,000	182.6
	($75/kW)	

Basis

Evaluation represents project beginning mid-1977, ending mid-1980. Average cost basis for scaling, mid-1979.
Stack gas reheat to 175°F by indirect steam reheat.
Minimum in-process storage; only pumps are spared.
Disposal pond located 1 mile from power plant.
Investment requirements for fly ash removal and disposal excluded; FGD process investment estimate begins with common feed plenum downstream of the ESP.
Construction labor shortages with accompanying overtime pay incentive not considered.

TABLE A-20. LIMESTONE SLURRY PROCESS

ANNUAL REVENUE REQUIREMENTS

(Variation from base case: 1,000-MW existing)

	Annual quantity	Unit cost, $	Total annual cost, $	% of average annual revenue requirements
Direct Costs				
Delivered raw materials				
Limestone	318,500 tons	7.00/ton	2,229,500	9.64
Total raw materials cost			2,229,500	9.64
Conversion costs				
Operating labor and supervision	36,750 man-hr	12.50/man-hr	459,400	1.99
Utilities				
Steam	979,600 MBtu	2.00/MBtu	1,959,200	8.48
Process water	486,800 kgal	0.12/kgal	58,400	0.25
Electricity	107,775,000 kWh	0.028/kWh	3,017,700	13.05
Maintenance				
Labor and material			2,603,700	11.26
Analyses	6,110 man-hr	17.00/man-hr	103,900	0.45
Total conversion costs			8,202,300	35.48
Total direct costs			10,431,800	45.12
Indirect Costs				
Capital charges				
Depreciation, interim replacements, and insurance at 6.4% of total depreciable investment			4,604,600	19.91
Average cost of capital and taxes at 8.6% of total capital investment			6,456,500	27.92
Overheads				
Plant, 50% of conversion costs less utilities			1,583,500	6.85
Administrative, 10% of operating labor			45,900	0.20
Total indirect costs			12,690,500	54.88
Total annual revenue requirements			23,122,300	100.00

	Mills/kWh	$/ton coal burned	$/MBtu heat input	$/ton S removed
Equivalent unit revenue requirements	3.30	7.71	0.37	333

Basis
- Midwest plant location, 1980 revenue requirements.
- Remaining life of power plant, 25 yr.
- Power unit on-stream time, 7,000 hr/yr.
- Coal burned, 2,999,900 tons/yr, 9,000 Btu/kWh.
- Stack gas reheat to 175°F.
- Sulfur removed, 69,490 short tons/yr; solids disposal, 368,400 tons/yr calcium solids including only hydrate water.
- Investment and revenue requirement for removal and disposal of fly ash excluded.
- Total direct investment, $41,114,000; total depreciable investment, $59,535,000; and total capital investment, $75,075,000.
- All tons shown are 2,000 lb.

TABLE A-21

LIMESTONE SLURRY PROCESS VARIATION FROM BASE CASE: 1.000 MW EXISTING REGULATED CO. ECONOMICS

TOTAL CAPITAL INVESTMENT 75075000

YEARS AFTER POWER UNIT START	ANNUAL OPERATION, KW-HR/KW	POWER UNIT HEAT REQUIREMENT, MILLION BTU/YEAR	POWER UNIT FUEL CONSUMPTION, TONS COAL/YEAR	SULFUR REMOVED BY POLLUTION CONTROL PROCESS, TONS/YEAR	BY-PRODUCT RATE, EQUIVALENT TONS/YEAR DRY SOLIDS	NET REVENUE, $/TON DRY SOLIDS	TOTAL OP. COST INCLUDING REGULATED ROI FOR POWER COMPANY, $/YEAR	TOTAL NET SALES REVENUE, $/YEAR	NET ANNUAL INCREASE (DECREASE) IN COST OF POWER, $	CUMULATIVE NET INCREASE (DECREASE) IN COST OF POWER, $
1										
2										
3										
4										
5										
6	7000	63000000	3000000	69500	368400	0.0	30060800	0	30060800	30060800
7	7000	63000000	3000000	69500	368400	0.0	29565800	0	29565800	59626600
8	7000	63000000	3000000	69500	368400	0.0	29070800	0	29070800	88697400
9	7000	63000000	3000000	69500	368400	0.0	28575800	0	28575800	117273200
10	7000	63000000	3000000	69500	368400	0.0	28080800	0	28080800	145354000
11	5000	45000000	2142900	49600	263200	0.0	24637800	0	24637800	169991800
12	5000	45000000	2142900	49600	263200	0.0	24142800	0	24142800	194134600
13	5000	45000000	2142900	49600	263200	0.0	23647800	0	23647800	217782400
14	5000	45000000	2142900	49600	263200	0.0	23152800	0	23152800	240935200
15	5000	45000000	2142900	49600	263200	0.0	22657800	0	22657800	263593000
16	3500	31500000	1500000	34700	184200	0.0	19856400	0	19856400	283449400
17	3500	31500000	1500000	34700	184200	0.0	19361400	0	19361400	302810800
18	3500	31500000	1500000	34700	184200	0.0	18866400	0	18866400	321677200
19	3500	31500000	1500000	34700	184200	0.0	18371400	0	18371400	340048600
20	3500	31500000	1500000	34700	184200	0.0	17876400	0	17876400	357925000
21	1500	13500000	642900	14900	78900	0.0	14054900	0	14054900	371979900
22	1500	13500000	642900	14900	78900	0.0	13559900	0	13559900	385539800
23	1500	13500000	642900	14900	78900	0.0	13064900	0	13064900	398604700
24	1500	13500000	642900	14900	78900	0.0	12569900	0	12569900	411174600
25	1500	13500000	642900	14900	78900	0.0	12074900	0	12074900	423249500
26	1500	13500000	642900	14900	78900	0.0	11579900	0	11579900	434829400
27	1500	13500000	642900	14900	78900	0.0	11084900	0	11084900	445914300
28	1500	13500000	642900	14900	78900	0.0	10589900	0	10589900	456504200
29	1500	13500000	642900	14900	78900	0.0	10094900	0	10094900	466599100
30	1500	13500000	642900	14900	78900	0.0	9599900	0	9599900	476199000
TOT	92500	832500000	3964350	918000	4868400		476199000	0	476199000	

LIFETIME AVERAGE INCREASE (DECREASE) IN UNIT OPERATING COST

DOLLARS PER TON OF COAL BURNED	12.01	0.0	12.01
MILLS PER KILOWATT-HOUR	5.15	0.0	5.15
CENTS PER MILLION BTU HEAT INPUT	57.20	0.0	57.20
DOLLARS PER TON OF SULFUR REMOVED	518.74	0.0	518.74
PROCESS COST DISCOUNTED AT 11.2% TO INITIAL YEAR, DOLLARS	197349300	0	197349300

LEVELIZED INCREASE (DECREASE) IN UNIT OPERATING COST EQUIVALENT TO DISCOUNTED PROCESS COST OVER LIFE OF POWER UNIT

DOLLARS PER TON OF COAL BURNED	10.76	0.0	10.76
MILLS PER KILOWATT-HOUR	4.61	0.0	4.61
CENTS PER MILLION BTU HEAT INPUT	51.25	0.0	51.25
DOLLARS PER TON OF SULFUR REMOVED	464.68	0.0	464.68

TABLE A-22. LIMESTONE SLURRY PROCESS

SUMMARY OF ESTIMATED CAPITAL INVESTMENT

(Variation from base case: 1,000 MW)

	Investment, $	% of total direct investment
Direct Investment		
Materials handling (hoppers, feeders, conveyors, elevators, bins, shaker, and puller)	2,209,000	5.6
Feed preparation (feeders, crushers, ball mills, hoists, tanks, agitators, and pumps)	2,250,000	5.8
Gas handling (common feed plenum and booster fans, gas ducts and dampers from plenum to absorber, exhaust gas ducts and dampers from reheater and stack)	7,135,000	18.3
SO_2 absorption (four mobile-bed scrubbers including presaturator and entrainment separators, recirculation tanks, agitators, and pumps)	13,192,000	33.7
Stack gas reheat (four indirect steam reheaters)	1,875,000	4.8
Solids disposal (onsite disposal, slurry disposal pumps, and pond water return pumps)	2,144,000	5.5
Subtotal	28,805,000	73.7
Services, utilities, and miscellaneous	1,728,000	4.4
Total process areas excluding pond construction	30,533,000	78.1
Pond construction	8,547,000	21.9
Total direct investment	39,080,000	100.0
Indirect Investment		
Engineering design and supervision	1,310,000	3.4
Architect and engineering contractor	280,000	0.7
Construction expense	5,040,000	12.9
Contractor fees	1,557,000	4.0
Total indirect investment	8,187,000	21.0
Contingency	9,453,000	24.2
Total fixed investment	56,720,000	145.2
Other Capital Charges		
Allowance for startup and modifications	4,817,000	12.3
Interest during construction	6,806,000	17.4
Total depreciable investment	68,343,000	174.9
Land	1,717,000	4.4
Working capital	1,670,000	4.3
Total capital investment	71,730,000	183.6
	($71/kW)	

Basis

Evaluation represents project beginning mid-1977, ending mid-1980. Average cost basis for scaling, mid-1979.
Stack gas reheat to 175°F by indirect steam reheat.
Minimum in-process storage; only pumps are spared.
Disposal pond located 1 mile from power plant.
Investment requirements for fly ash removal and disposal excluded; FGD process investment estimate begins with common feed plenum downstream of the ESP.
Construction labor shortages with accompanying overtime pay incentive not considered.

TABLE A-23. LIMESTONE SLURRY PROCESS

ANNUAL REVENUE REQUIREMENTS

(Variation from base case: 1,000 MW)

	Annual quantity	Unit cost, $	Total annual cost, $	% of average annual revenue requirements
Direct Costs				
Delivered raw materials				
Limestone	305,200 tons	7.00/ton	2,136,400	9.82
Total raw materials cost			2,136,400	9.82
Conversion costs				
Operating labor and supervision	36,750 man-hr	12.50/man-hr	459,400	2.11
Utilities				
Steam	946,800 MBtu	2.00/MBtu	1,893,600	8.70
Process water	527,000 kgal	0.12/kgal	63,200	0.29
Electricity	104,201,000 kWh	0.028/kWh	2,917,600	13.41
Maintenance				
Labor and material			2,393,700	11.00
Analyses	6,100 man-hr	17.00/man-hr	103,700	0.48
Total conversion costs			7,831,200	35.99
Total direct costs			9,967,600	45.81
Indirect Costs				
Capital charges				
Depreciation, interim replacements, and insurance at 6.0% of total depreciable investment			4,100,600	18.84
Average cost of capital and taxes at 8.6% of total capital investment			6,168,800	28.35
Overheads				
Plant, 50% of conversion costs less utilities			1,478,400	6.79
Administrative, 10% of operating labor			45,900	0.21
Total indirect costs			11,793,700	54.19
Total annual revenue requirements			21,761,300	100.00

	Mills/kWh	$/ton coal burned	$/MBtu heat input	$/ton S removed
Equivalent unit revenue requirements	3.11	7.50	0.36	327

Basis
- Midwest plant location, 1980 revenue requirements.
- Remaining life of power plant, 30 yr.
- Power unit on-stream time, 7,000 hr/yr.
- Coal burned, 2,900,100 tons/yr, 8,700 Btu/kWh.
- Stack gas reheat to 175°F.
- Sulfur removed, 66,540 short tons/yr; solids disposal, 356,140 tons/yr calcium solids including only hydrate water.
- Investment and revenue requirement for removal and disposal of fly ash excluded.
- Total direct investment, $39,080,000; total depreciable investment, $68,343,000; and total capital investment, $71,730,000.
- All tons shown are 2,000 lb.

TABLE A-24

LIMESTONE SLURRY PROCESS VARIATION FROM BASE CASE: 1,000 MW REGULATED CO. ECONOMICS

TOTAL CAPITAL INVESTMENT 71730000

YEARS AFTER POWER UNIT START	ANNUAL OPERATION, KW-HR/KW	POWER UNIT HEAT REQUIREMENT, MILLION BTU/YEAR	POWER UNIT FUEL CONSUMPTION, TONS COAL/YEAR	SULFUR REMOVED BY POLLUTION CONTROL PROCESS, TONS/YEAR	BY-PRODUCT RATE, EQUIVALENT TONS/YEAR DRY SOLIDS	NET REVENUE, $/TON DRY SOLIDS	TOTAL OP. COST INCLUDING REGULATED ROI FOR POWER COMPANY, $/YEAR	TOTAL NET SALES REVENUE, $/YEAR	NET ANNUAL INCREASE (DECREASE) IN COST OF POWER, $	CUMULATIVE NET INCREASE (DECREASE) IN COST OF POWER, $
1	7000	60900000	2900000	66500	356200	0.0	27932400	0	27932400	27932400
2	7000	60900000	2900000	66500	356200	0.0	27540500	0	27540500	55472900
3	7000	60900000	2900000	66500	356200	0.0	27148700	0	27148700	82621600
4	7000	60900000	2900000	66500	356200	0.0	26756900	0	26756900	109378500
5	7000	60900000	2900000	66500	356200	0.0	26365000	0	26365000	135743500
6	7000	60900000	2900000	66500	356200	0.0	25973200	0	25973200	161716700
7	7000	60900000	2900000	66500	356200	0.0	25581400	0	25581400	187298100
8	7000	60900000	2900000	66500	356200	0.0	25189500	0	25189500	212487600
9	7000	60900000	2900000	66500	356200	0.0	24797700	0	24797700	237285300
10	7000	60900000	2900000	66500	356200	0.0	24405900	0	24405900	261691200
11	5000	43500000	2071400	47500	254400	0.0	21196300	0	21196300	282887500
12	5000	43500000	2071400	47500	254400	0.0	20804500	0	20804500	303692000
13	5000	43500000	2071400	47500	254400	0.0	20412700	0	20412700	324104700
14	5000	43500000	2071400	47500	254400	0.0	20020800	0	20020800	344125500
15	5000	43500000	2071400	47500	254400	0.0	19629000	0	19629000	363754500
16	3500	30450000	1450000	33300	178100	0.0	17034900	0	17034900	380789400
17	3500	30450000	1450000	33300	178100	0.0	16643000	0	16643000	397432400
18	3500	30450000	1450000	33300	178100	0.0	16251200	0	16251200	413683600
19	3500	30450000	1450000	33300	178100	0.0	15859400	0	15859400	429543000
20	3500	30450000	1450000	33300	178100	0.0	15467500	0	15467500	445010500
21	1500	13050000	621400	14300	76300	0.0	11904600	0	11904600	456915100
22	1500	13050000	621400	14300	76300	0.0	11512800	0	11512800	468427900
23	1500	13050000	621400	14300	76300	0.0	11120900	0	11120900	479548800
24	1500	13050000	621400	14300	76300	0.0	10729100	0	10729100	490277900
25	1500	13050000	621400	14300	76300	0.0	10337300	0	10337300	500615200
26	1500	13050000	621400	14300	76300	0.0	9945400	0	9945400	510560600
27	1500	13050000	621400	14300	76300	0.0	9553600	0	9553600	520114200
28	1500	13050000	621400	14300	76300	0.0	9161800	0	9161800	529276000
29	1500	13050000	621400	14300	76300	0.0	8769900	0	8769900	538045900
30	1500	13050000	621400	14300	76300	0.0	8378100	0	8378100	546424000
TOT 127500		1109250000	52821000	1212000	6487500		546424000	0	546424000	

LIFETIME AVERAGE INCREASE (DECREASE) IN UNIT OPERATING COST

DOLLARS PER TON OF COAL BURNED	10.34	0.0	10.34
MILLS PER KILOWATT-HOUR	4.29	0.0	4.29
CENTS PER MILLION BTU HEAT INPUT	49.26	0.0	49.26
DOLLARS PER TON OF SULFUR REMOVED	450.84	0.0	450.84

PROCESS COST DISCOUNTED AT 11.2% TO INITIAL YEAR, DOLLARS 200411000 0 200411000

LEVELIZED INCREASE (DECREASE) IN UNIT OPERATING COST EQUIVALENT TO DISCOUNTED PROCESS COST OVER LIFE OF POWER UNIT

DOLLARS PER TON OF COAL BURNED	9.50	0.0	9.50
MILLS PER KILOWATT-HOUR	3.94	0.0	3.94
CENTS PER MILLION BTU HEAT INPUT	45.25	0.0	45.25
DOLLARS PER TON OF SULFUR REMOVED	414.33	0.0	414.33

TABLE A-25. LIMESTONE SLURRY PROCESS

SUMMARY OF ESTIMATED CAPITAL INVESTMENT

(Variation from base case: 90% SO_2 removal)

	Investment, $	% of total direct investment
Direct Investment		
Materials handling (hoppers, feeders, conveyors, elevators, bins, shaker, and puller)	1,802,000	6.7
Feed preparation (feeders, crushers, ball mills, hoists, tanks, agitators, and pumps)	1,828,000	6.7
Gas handling (common feed plenum and booster fans, gas ducts and dampers from plenum to absorber, exhaust gas ducts and dampers from reheater and stack)	4,323,000	16.0
SO_2 absorption (four mobile-bed scrubbers including presaturator and entrainment separators, recirculation tanks, agitators, and pumps)	8,974,000	33.2
Stack gas reheat (four indirect steam reheaters)	1,283,000	4.7
Solids disposal (onsite disposal, slurry disposal pumps, and pond water return pumps)	1,789,000	6.6
Subtotal	19,999,000	73.9
Services, utilities, and miscellaneous	1,200,000	4.4
Total process areas excluding pond construction	21,199,000	78.3
Pond construction	5,867,000	21.7
Total direct investment	27,066,000	100.0
Indirect Investment		
Engineering design and supervision	1,239,000	4.6
Architect and engineering contractor	273,000	1.0
Construction expense	3,718,000	13.7
Contractor fees	1,177,000	4.4
Total indirect investment	6,407,000	23.7
Contingency	6,695,000	24.7
Total fixed investment	40,168,000	148.4
Other Capital Charges		
Allowance for startup and modifications	3,430,000	12.7
Interest during construction	4,820,000	17.8
Total depreciable investment	48,418,000	178.9
Land	1,175,000	4.3
Working capital	1,056,000	3.9
Total capital investment	50,649,000	187.1
	($101/kW)	

Basis

Evaluation represents project beginning mid-1977, ending mid-1980. Average cost basis for scaling, mid-1979.
Stack gas reheat to 175°F by indirect steam reheat.
Minimum in-process storage; only pumps are spared.
Disposal pond located 1 mile from power plant.
Investment requirements for fly ash removal and disposal excluded; FGD process investment estimate begins with common feed plenum downstream of the ESP.
Construction labor shortages with accompanying overtime pay incentive not considered.

TABLE A-26. LIMESTONE SLURRY PROCESS

ANNUAL REVENUE REQUIREMENTS

(Variation from base case: 90% SO_2 removal)

	Annual quantity	Unit cost, $	Total annual cost, $	% of average annual revenue requirements
Direct Costs				
Delivered raw materials				
Limestone	182,400 tons	7.00/ton	1,276,800	8.77
Total raw materials cost			1,276,800	8.77
Conversion costs				
Operating labor and supervision	25,990 man-hr	12.50/man-hr	324,900	2.23
Utilities				
Steam	489,500 MBtu	2.00/MBtu	979,000	6.72
Process water	254,400 kgal	0.12/kgal	30,500	0.21
Electricity	54,715,000 kWh	0.029/kWh	1,586,700	10.90
Maintenance				
Labor and material			1,871,900	12.86
Analyses	3,760 man-hr	17.00/man-hr	63,900	0.44
Total conversion costs			4,856,900	33.36
Total direct costs			6,133,700	42.13
Indirect Costs				
Capital charges				
Depreciation, interim replacements, and insurance at 6.0% of total depreciable investment			2,905,100	19.96
Average cost of capital and taxes at 8.6% of total capital investment			4,355,800	29.92
Overheads				
Plant, 50% of conversion costs less utilities			1,130,400	7.77
Administrative, 10% of operating labor			32,500	0.22
Total indirect costs			8,423,800	57.87
Total annual revenue requirements			14,557,400	100.00

	Mills/kWh	$/ton coal burned	$/MBtu heat input	$/ton S removed
Equivalent unit revenue requirements	4.15	9.70	0.46	366

Basis
- Midwest plant location, 1980 revenue requirements.
- Remaining life of power plant, 30 yr.
- Power unit on-stream time, 7,000 hr/yr.
- Coal burned, 1,500,100 tons/yr, 9,000 Btu/kWh.
- Stack gas reheat to 175°F.
- Sulfur removed, 39,800 short tons/yr; solids disposal, 215,250 tons/yr calcium solids including only hydrate water.
- Investment and revenue requirement for removal and disposal of fly ash excluded.
- Total direct investment, $27,066,000; total depreciable investment, $48,418,000; and total capital investment, $50,649,000.
- All tons shown are 2,000 lb.

TABLE A-27

LIMESTONE SLURRY PROCESS VARIATION FROM BASE CASE: 90% SO2 REMOVAL REGULATED CO. ECONOMICS

TOTAL CAPITAL INVESTMENT 50649000

YEARS AFTER POWER UNIT START	ANNUAL OPERATION, KW-HR/KW	POWER UNIT HEAT REQUIREMENT, MILLION BTU/YEAR	POWER UNIT FUEL CONSUMPTION, TONS COAL/YEAR	SULFUR REMOVED BY POLLUTION CONTROL PROCESS, TONS/YEAR	BY-PRODUCT RATE, EQUIVALENT TONS/YEAR DRY SOLIDS	NET REVENUE, $/TON DRY SOLIDS	TOTAL OP. COST INCLUDING REGULATED ROI FOR POWER COMPANY, $/YEAR	TOTAL NET SALES REVENUE, $/YEAR	NET ANNUAL INCREASE (DECREASE) IN COST OF POWER, $	CUMULATIVE NET INCREASE (DECREASE) IN COST OF POWER, $
1	7000	31500000	1500000	39800	215300	0.0	18914900	0	18914900	18914900
2	7000	31500000	1500000	39800	215300	0.0	18637300	0	18637300	37552200
3	7000	31500000	1500000	39800	215300	0.0	18359700	0	18359700	55911900
4	7000	31500000	1500000	39800	215300	0.0	18082200	0	18082200	73994100
5	7000	31500000	1500000	39800	215300	0.0	17804600	0	17804600	91798700
6	7000	31500000	1500000	39800	215300	0.0	17527000	0	17527000	109325700
7	7000	31500000	1500000	39800	215300	0.0	17249400	0	17249400	126575100
8	7000	31500000	1500000	39800	215300	0.0	16971800	0	16971800	143546900
9	7000	31500000	1500000	39800	215300	0.0	16694200	0	16694200	160241100
10	7000	31500000	1500000	39800	215300	0.0	16416600	0	16416600	176657700
11	5000	22500000	1071400	28400	153800	0.0	14411400	0	14411400	191069100
12	5000	22500000	1071400	28400	153800	0.0	14133800	0	14133800	205202900
13	5000	22500000	1071400	28400	153800	0.0	13856200	0	13856200	219059100
14	5000	22500000	1071400	28400	153800	0.0	13578600	0	13578600	232637700
15	5000	22500000	1071400	28400	153800	0.0	13301100	0	13301100	245938800
16	3500	15750000	750000	19900	107600	0.0	11659200	0	11659200	257598000
17	3500	15750000	750000	19900	107600	0.0	11381600	0	11381600	268979600
18	3500	15750000	750000	19900	107600	0.0	11104000	0	11104000	280083600
19	3500	15750000	750000	19900	107600	0.0	10826400	0	10826400	290910000
20	3500	15750000	750000	19900	107600	0.0	10548800	0	10548800	301458800
21	1500	6750000	321400	8500	46100	0.0	8271800	0	8271800	309730600
22	1500	6750000	321400	8500	46100	0.0	7994200	0	7994200	317724800
23	1500	6750000	321400	8500	46100	0.0	7716600	0	7716600	325441400
24	1500	6750000	321400	8500	46100	0.0	7439000	0	7439000	332880400
25	1500	6750000	321400	8500	46100	0.0	7161400	0	7161400	340041800
26	1500	6750000	321400	8500	46100	0.0	6883900	0	6883900	346925700
27	1500	6750000	321400	8500	46100	0.0	6606300	0	6606300	353532000
28	1500	6750000	321400	8500	46100	0.0	6328700	0	6328700	359860700
29	1500	6750000	321400	8500	46100	0.0	6051100	0	6051100	365911800
30	1500	6750000	321400	8500	46100	0.0	5773500	0	5773500	371685300
TOT	127500	573750000	27321000	724500	3921000		371685300	0	371685300	

LIFETIME AVERAGE INCREASE (DECREASE) IN UNIT OPERATING COST

DOLLARS PER TON OF COAL BURNED	13.60	0.0	13.60
MILLS PER KILOWATT-HOUR	5.83	0.0	5.83
CENTS PER MILLION BTU HEAT INPUT	64.78	0.0	64.78
DOLLARS PER TON OF SULFUR REMOVED	513.02	0.0	513.02
PROCESS COST DISCOUNTED AT 11.2% TO INITIAL YEAR, DOLLARS	135689300	0	135689300

LEVELIZED INCREASE (DECREASE) IN UNIT OPERATING COST EQUIVALENT TO DISCOUNTED PROCESS COST OVER LIFE OF POWER UNIT

DOLLARS PER TON OF COAL BURNED	12.44	0.0	12.44
MILLS PER KILOWATT-HOUR	5.33	0.0	5.33
CENTS PER MILLION BTU HEAT INPUT	59.23	0.0	59.23
DOLLARS PER TON OF SULFUR REMOVED	468.86	0.0	468.86

TABLE A-28. LIMESTONE SLURRY PROCESS

SUMMARY OF ESTIMATED CAPITAL INVESTMENT

(Variation from base case: oil-fired, existing)

	Investment, $	% of total direct investment
Direct Investment		
Materials handling (hoppers, feeders, conveyors, elevators, bins, shaker, and puller)	1,078,000	5.3
Feed preparation (feeders, crushers, ball mills, hoists, tanks, agitators, and pumps)	1,213,000	5.9
Gas handling (common feed plenum and booster fans, gas ducts and dampers from plenum to absorber, exhaust gas ducts and dampers from reheater and stack)	4,447,000	21.8
SO_2 absorption (four mobile-bed scrubbers including presaturator and entrainment separators, recirculation tanks, agitators, and pumps)	8,436,000	41.4
Stack gas reheat (four direct oil reheaters)	726,000	3.6
Solids disposal (onsite disposal, slurry disposal pumps, and pond water return pumps)	1,418,000	7.0
Subtotal	17,318,000	85.0
Services, utilities, and miscellaneous	1,039,000	5.1
Total process areas excluding pond construction	18,357,000	90.1
Pond construction	2,020,000	9.9
Total direct investment	20,377,000	100.0
Indirect Investment		
Engineering design and supervision	1,112,000	5.4
Architect and engineering contractor	260,000	1.3
Construction expense	3,031,000	14.9
Contractor fees	949,000	4.7
Total indirect investment	5,352,000	26.3
Contingency	5,146,000	25.2
Total fixed investment	30,875,000	151.5
Other Capital Charges		
Allowance for startup and modifications	2,885,000	14.2
Interest during construction	3,705,000	18.2
Total depreciable investment	37,465,000	183.9
Land	357,000	1.7
Working capital	814,000	4.0
Total capital investment	38,636,000	189.6
	($77/kW)	

Basis

Evaluation represents project beginning mid-1977, ending mid-1980. Average cost basis for scaling, mid-1979.
Stack gas reheat to 175°F by indirect steam reheat.
Minimum in-process storage; only pumps are spared.
Disposal pond located 1 mile from power plant.
Investment requirements for fly ash removal and disposal excluded; FGD process investment estimate begins with common feed plenum downstream of the ESP.
Construction labor shortages with accompanying overtime pay incentive not considered.

TABLE A-29. LIMESTONE SLURRY PROCESS

ANNUAL REVENUE REQUIREMENTS

(Variation from base case: oil-fired, existing)

	Annual quantity	Unit cost, $	Total annual cost, $	% of average annual revenue requirements
Direct Costs				
Delivered raw materials				
Limestone	70,200 tons	7.00/ton	491,400	4.25
Total raw materials cost			491,400	4.25
Conversion costs				
Operating labor and supervision	24,860 man-hr	12.50/man-hr	310,800	2.69
Utilities				
Oil	2,881,300 gal	0.40/gal	1,152,500	9.97
Process water	178,400 kgal	0.12/kgal	21,400	0.19
Electricity	44,449,000 kWh	0.029/kWh	1,289,000	11.15
Maintenance				
Labor and material			1,529,200	13.23
Analyses	3,600 man-hr	17.00/man-hr	61,200	0.53
Total conversion costs			4,364,100	37.76
Total direct costs			4,855,500	42.01
Indirect Costs				
Capital charges				
Depreciation, interim replacements, and insurance at 6.4% of total depreciable investment			2,397,800	20.75
Average cost of capital and taxes at 8.6% of total capital investment			3,322,700	28.75
Overheads				
Plant, 50% of conversion costs less utilities			950,600	8.22
Administrative, 10% of operating labor			31,100	0.27
Total indirect costs			6,702,200	57.99
Total annual revenue requirements			11,557,700	100.00

	Mills/kWh	$/bbl oil burned	$/MBtu heat input	$/ton S removed
Equivalent unit revenue requirements	3.30	2.16	0.36	777

Basis
- Midwest plant location, 1980 revenue requirements.
- Remaining life of power plant, 25 yr.
- Power unit on-stream time, 7,000 hr/yr.
- Oil burned, 5,350,000 bbl/yr, 9,200 Btu/kWh.
- Stack gas reheat to 175°F.
- Sulfur removed, 14,880 short tons/yr; solids disposal, 63,030 tons/yr calcium solids including only hydrate water.
- Investment and revenue requirement for removal and disposal of fly ash excluded.
- Total direct investment, $20,377,000; total depreciable investment, $37,465,000; and total capital investment, $38,636,000.
- All tons shown are 2,000 lb.

TABLE A-30

LIMESTONE SLURRY PROCESS VARIATION FROM BASE CASE: OIL-FIRED, EXISTING REGULATED CO, ECONOMICS

TOTAL CAPITAL INVESTMENT 38636000

YEARS AFTER POWER UNIT START	ANNUAL OPERATION, KW-HR/KW	POWER UNIT HEAT REQUIREMENT, MILLION BTU/YEAR	POWER UNIT FUEL CONSUMPTION, BARRELS OIL/YEAR	SULFUR REMOVED BY POLLUTION CONTROL PROCESS, TONS/YEAR	BY-PRODUCT RATE, EQUIVALENT TONS/YEAR DRY SOLIDS	NET REVENUE, $/TON DRY SOLIDS	TOTAL OP. COST INCLUDING REGULATED ROI FOR POWER COMPANY, $/YEAR	TOTAL NET SALES REVENUE, $/YEAR	NET ANNUAL INCREASE (DECREASE) IN COST OF POWER, $	CUMULATIVE NET INCREASE (DECREASE) IN COST OF POWER, $
1										
2										
3										
4										
5										
6	7000	32200000	5324100	14900	63000	0.0	15131400	0	15131400	15131400
7	7000	32200000	5324100	14900	63000	0.0	14873600	0	14873600	30005000
8	7000	32200000	5324100	14900	63000	0.0	14615900	0	14615900	44620900
9	7000	32200000	5324100	14900	63000	0.0	14358100	0	14358100	58979000
10	7000	32200000	5324100	14900	63000	0.0	14100400	0	14100400	73079400
11	5000	23000000	3802900	10600	45000	0.0	12475800	0	12475800	85555200
12	5000	23000000	3802900	10600	45000	0.0	12218000	0	12218000	97773200
13	5000	23000000	3802900	10600	45000	0.0	11960300	0	11960300	109733500
14	5000	23000000	3802900	10600	45000	0.0	11702500	0	11702500	121436000
15	5000	23000000	3802900	10600	45000	0.0	11444800	0	11444800	132880800
16	3500	16100000	2662000	7400	31500	0.0	10104600	0	10104600	142985400
17	3500	16100000	2662000	7400	31500	0.0	9846800	0	9846800	152832200
18	3500	16100000	2662000	7400	31500	0.0	9589100	0	9589100	162421300
19	3500	16100000	2662000	7400	31500	0.0	9331300	0	9331300	171752600
20	3500	16100000	2662000	7400	31500	0.0	9073600	0	9073600	180826200
21	1500	6900000	1140900	3200	13500	0.0	7220900	0	7220900	188047100
22	1500	6900000	1140900	3200	13500	0.0	6963100	0	6963100	195010200
23	1500	6900000	1140900	3200	13500	0.0	6705400	0	6705400	201715600
24	1500	6900000	1140900	3200	13500	0.0	6447600	0	6447600	208163200
25	1500	6900000	1140900	3200	13500	0.0	6189900	0	6189900	214353100
26	1500	6900000	1140900	3200	13500	0.0	5932100	0	5932100	220285200
27	1500	6900000	1140900	3200	13500	0.0	5674300	0	5674300	225959500
28	1500	6900000	1140900	3200	13500	0.0	5416600	0	5416600	231376100
29	1500	6900000	1140900	3200	13500	0.0	5158800	0	5158800	236534900
30	1500	6900000	1140900	3200	13500	0.0	4901100	0	4901100	241436000
TOT	92500	425500000	70354000	196500	832500		241436000	0	241436000	

LIFETIME AVERAGE INCREASE (DECREASE) IN UNIT OPERATING COST

DOLLARS PER BARREL OF OIL BURNED	3.43	0.0	3.43
MILLS PER KILOWATT-HOUR	5.22	0.0	5.22
CENTS PER MILLION BTU HEAT INPUT	56.74	0.0	56.74
DOLLARS PER TON OF SULFUR REMOVED	1228.68	0.0	1228.68
PROCESS COST DISCOUNTED AT 11.2% TO INITIAL YEAR, DOLLARS	99664700	0	99664700

LEVELIZED INCREASE (DECREASE) IN UNIT OPERATING COST EQUIVALENT TO DISCOUNTED PROCESS COST OVER LIFE OF POWER UNIT

DOLLARS PER BARREL OF OIL BURNED	3.06	0.0	3.06
MILLS PER KILOWATT-HOUR	4.66	0.0	4.66
CENTS PER MILLION BTU HEAT INPUT	50.63	0.0	50.63
DOLLARS PER TON OF SULFUR REMOVED	1096.42	0.0	1096.42

TABLE A-31. LIMESTONE SLURRY PROCESS

SUMMARY OF ESTIMATED CAPITAL INVESTMENT

(Variation from base case: 500 MW, 3.5% sulfur) with IUCS process sludge fixation and land disposal)

	Investment, $	% of total direct investment
Direct Investment		
Materials handling (hoppers, feeders, conveyors, elevators, bins, shaker, and puller)	3,688,000	18.4
Feed preparation (feeders, crushers, ball mills, hoists, tanks, agitators, and pumps)	1,758,000	8.8
Gas handling (common feed plenum and booster fans, gas ducts and dampers from plenum to absorber, exhaust gas ducts and dampers from reheater and stack)	4,318,000	21.7
SO_2 absorption (four mobile-bed scrubbers including presaturator and entrainment separators, recirculation tanks, agitators, and pumps)	8,974,000	44.9
Stack gas reheat (four indirect steam reheaters)	1,282,000	6.4
Sludge fixation (thickener, filters, and mixer)	2,389,000	11.9
Subtotal	22,409,000	112.1
Services, utilities, and miscellaneous	1,345,000	6.7
Total process areas excluding mobile equipment	23,754,000	118.8
Mobile equipment	581,000	2.9
Fly ash pond cost credit	(4,339,000)	(21.7)
Total direct investment	19,996,000	100.0
Indirect Investment		
Engineering design and supervision	1,129,000	5.6
Architect and engineering contractor	282,000	1.4
Construction expense	3,466,000	17.4
Contractor fees	923,000	4.6
Total indirect investment	5,800,000	29.0
Contingency	5,090,000	25.5
Total fixed investment	30,886,000	154.5
Other Capital Charges		
Allowance for startup and modifications	3,089,000	15.4
Interest during construction	3,706,000	18.5
Total depreciable investment	37,681,000	188.4
Land	544,000	2.7
Working capital	1,526,000	7.6
Total capital investment	39,751,000	198.8
	($80/kW)	

Basis
Evaluation represents project beginning mid-1977, ending mid-1980. Average cost basis for scaling, mid-1979.
Stack gas reheat to 175°F by indirect steam reheat.
Minimum in-process storage; only pumps are spared.
Landfill located 1 mile from power plant.
ESP costs of $9,614,000 not shown.
Construction labor shortages with accompanying overtime pay incentive not considered.

TABLE A-32. LIMESTONE SLURRY PROCESS

ANNUAL REVENUE REQUIREMENTS

(Variation from base case: 500 MW, 3.5% sulfur, with IUCS process sludge fixation and land disposal)

	Annual quantity	Unit cost, $	Total annual cost, $	% of average annual revenue requirements
Direct Costs				
Delivered raw materials				
Limestone	159,300 tons	7.00/ton	1,115,100	6.90
Ground lime	16,216 tons	53.00/ton	859,400	5.31
Total raw materials cost			1,974,500	12.21
Conversion costs				
Operating labor and supervision				
FGD plant	72,950 man-hr	12.50/man-hr	911,900	5.64
Solids disposal	43,800 man-hr	17.00/man-hr	744,600	4.61
Utilities				
Steam	489,800 MBtu	2.00/MBtu	979,600	6.06
Process water	243,400 kgal	0.12/kgal	29,200	0.18
Electricity	58,452,000 kWh	0.029/kWh	1,695,100	10.48
Maintenance				
Labor and material			1,900,300	11.75
Analyses	5,100 man-hr	17.00/man-hr	86,700	0.54
Disposal operations (Land preparation, trucks, earthmoving equipment, and fuel oil)			120,200	0.74
Total conversion costs			6,467,600	40.00
Total direct costs			8,442,100	52.21
Indirect Costs				
Capital charges				
Depreciation, interim replacements, and insurance at 6.0% of total depreciable investment			2,260,900	13.98
Average cost of capital and taxes at 8.6% of total capital investment			3,418,600	21.15
Overheads				
Plant, 50% of conversion costs less utilities			1,881,900	11.64
Administrative, 10% of operating labor			165,700	1.02
Total indirect costs			7,727,100	47.79
Total annual revenue requirements			16,169,200	100.00

	Mills/kWh	$/ton coal burned	$/MBtu heat input	$/ton sulfur removed
Equivalent unit revenue requirements	4.62	10.78	0.51	465

Basis
- Midwest plant location, 1980 revenue requirements.
- Remaining life of power plant, 30 yr.
- Power unit on-stream time, 7,000 hr/yr.
- Coal burned, 1,500,100 tons/yr, 9,000 Btu/kWh.
- Stack gas reheat to 175°F.
- Sulfur removed, 34,750 short tons/yr; solids disposal, 184,200 tons/yr calcium solids including only hydrate water.
- ESP annual revenue requirements of $1,975,000 not shown.
- Total direct investment, $19,996,000; total depreciable investment, $37,681,000; and total capital investment, $39,751,000.
- All tons shown are 2,000 lb.

TABLE A-33. LIME SLURRY PROCESS

SUMMARY OF ESTIMATED CAPITAL INVESTMENT

(Variation from base case: 200-MW existing)

	Investment, $	% of total direct investment
Direct Investment		
Materials handling (feeders, conveyors, elevators, and silos)	1,088,000	9.4
Feed preparation (feeders, slaker, tanks, agitators, and pumps)	437,000	3.7
Gas handling (common feed plenum and booster fans, gas ducts and dampers from plenum to absorber, exhaust gas ducts and dampers from absorber to reheater and stack)	2,202,000	18.9
SO_2 absorption (two mobile-bed scrubbers including presaturator and entrainment separators, tanks, agitators, and pumps)	4,082,000	35.0
Stack gas reheat (two indirect steam reheaters)	590,000	5.1
Solids disposal (onsite disposal facilities including feed tank, agitator, slurry disposal pumps, and pond water return pumps)	1,357,000	11.6
Subtotal	9,756,000	83.7
Services, utilities, and miscellaneous	585,000	5.0
Total process areas excluding pond construction	10,341,000	88.7
Pond construction	1,316,000	11.3
Total direct investment	11,657,000	100.0
Indirect Investment		
Engineering design and supervision	690,000	5.9
Architect and engineering contractor	159,000	1.4
Construction expense	1,901,000	16.3
Contractor fees	621,000	5.3
Total indirect investment	3,371,000	28.9
Contingency	3,006,000	25.8
Total fixed investment	18,034,000	154.7
Other Capital Charges		
Allowance for startup and modifications	1,672,000	14.3
Interest during construction	2,164,000	18.6
Total depreciable investment	21,870,000	187.6
Land	265,000	2.3
Working capital	623,000	5.3
Total capital investment	22,758,000	195.2
	($114/kW)	

Basis
Evaluation represents project beginning mid-1977, ending mid-1980. Average cost basis for scaling, mid-1979.
Stack gas reheat to 175°F by indirect steam reheat.
Minimum in-process storage; only pumps are spared.
Disposal pond located 1 mile from power plant.
Investment requirements for fly ash removal and disposal excluded; FGD process investment estimate begins with common feed plenum downstream of the ESP.
Construction labor shortages with accompanying overtime pay incentive not considered.

TABLE A-34. LIME SLURRY PROCESS

ANNUAL REVENUE REQUIREMENTS

(Variation from base case: 200-MW existing)

	Annual quantity	Unit cost, $	Total annual cost, $	% of average annual revenue requirements
Direct Costs				
Delivered raw materials				
Lime	29,000 tons	42.00/ton	1,218,000	16.04
Total raw materials cost			1,218,000	16.04
Conversion costs				
Operating labor and supervision	16,440 man-hr	12.50/man-hr	205,500	2.71
Utilities				
Steam	206,200 MBtu	2.00/MBtu	412,400	5.43
Process water	98,200 kgal	0.12/kgal	11,800	0.16
Electricity	20,193,000 kWh	0.031/kWh	626,000	8.25
Maintenance				
Labor and material			970,200	12.78
Analyses	1,980 man-hr	17.00/man-hr	33,700	0.44
Total conversion costs			2,259,600	29.77
Total direct costs			3,477,600	45.81
Indirect Costs				
Capital charges				
Depreciation, interim replacements, and insurance at 7.0% of total depreciable investment			1,530,900	20.17
Average of cost of capital and taxes at 8.6% of total capital investment			1,957,200	25.78
Overheads				
Plant, 50% of conversion costs less utilities			604,700	7.97
Administrative, 10% of operating labor			20,600	0.27
Total indirect costs			4,113,400	54.19
Total annual revenue requirements			7,591,000	100.00

	Mills/kWh	$/ton coal burned	$/MBtu heat input	$/ton S removed
Equivalent unit revenue requirements	5.42	11.98	0.57	517

Basis
- Midwest plant location, 1980 revenue requirements.
- Remaining life of power plant, 20 yr.
- Power unit on-stream time, 7,000 hr/yr.
- Coal burned, 633,500 tons/yr, 9,500 Btu/kWh.
- Stack gas reheat to 175°F.
- Sulfur removed, 14,670 short tons/yr; solids disposal, 64,800 tons/yr calcium solids including only hydrate water.
- Investment and revenue requirement for removal and disposal of fly ash excluded.
- Total direct investment, $11,657,000; total depreciable investment, $21,870,000; and total capital investment, $22,758,000.
- All tons shown are 2,000 lb.

TABLE A-35

LIME SLURRY PROCESS VARIATION FROM BASE CASE: 200 MW EXISTING REGULATED CO. ECONOMICS

TOTAL CAPITAL INVESTMENT 22758000

YEARS AFTER POWER UNIT START	ANNUAL OPERATION, KW-HR/KW	POWER UNIT HEAT REQUIREMENT, MILLION BTU /YEAR	POWER UNIT FUEL CONSUMPTION, TONS COAL /YEAR	SULFUR REMOVED BY PULLUTION CONTROL PROCESS, TONS/YEAR	BY-PRODUCT RATE, EQUIVALENT TONS/YEAR DRY SOLIDS	NET REVENUE, $/TON DRY SOLIDS	TOTAL OP. COST INCLUDING REGULATED ROI FOR POWER COMPANY, $/YEAR	TOTAL NET SALES REVENUE, $/YEAR	NET ANNUAL INCREASE (DECREASE) IN COST OF POWER, $	CUMULATIVE NET INCREASE (DECREASE) IN COST OF POWER, $
1										
2										
3										
4										
5										
6										
7										
8										
9										
10										
11	5000	9500000	452400	10500	46300	0.0	8933200	0	8933200	8933200
12	5000	9500000	452400	10500	46300	0.0	8745100	0	8745100	17678300
13	5000	9500000	452400	10500	46300	0.0	8557000	0	8557000	26235300
14	5000	9500000	452400	10500	46300	0.0	8368900	0	8368900	34604200
15	5000	9500000	452400	10500	46300	0.0	8180800	0	8180800	42785000
16	3500	6650000	316700	7300	32400	0.0	7221400	0	7221400	50006400
17	3500	6650000	316700	7300	32400	0.0	7033300	0	7033300	57039700
18	3500	6650000	316700	7300	32400	0.0	6845200	0	6845200	63884900
19	3500	6650000	316700	7300	32400	0.0	6657100	0	6657100	70542000
20	3500	6650000	316700	7300	32400	0.0	6469000	0	6469000	77011000
21	1500	2850000	135700	3100	13900	0.0	5155600	0	5155600	82166600
22	1500	2850000	135700	3100	13900	0.0	4967500	0	4967500	87134100
23	1500	2850000	135700	3100	13900	0.0	4779400	0	4779400	91913500
24	1500	2850000	135700	3100	13900	0.0	4591300	0	4591300	96504800
25	1500	2850000	135700	3100	13900	0.0	4403200	0	4403200	100908000
26	1500	2850000	135700	3100	13900	0.0	4215100	0	4215100	105123100
27	1500	2850000	135700	3100	13900	0.0	4027100	0	4027100	109150200
28	1500	2850000	135700	3100	13900	0.0	3839000	0	3839000	112989200
29	1500	2850000	135700	3100	13900	0.0	3650900	0	3650900	116640100
30	1500	2850000	135700	3100	13900	0.0	3462800	0	3462800	120102900
TOT	57500	109250000	5202500	120000	532500		120102900	0	120102900	

LIFETIME AVERAGE INCREASE (DECREASE) IN UNIT OPERATING COST

DOLLARS PER TON OF COAL BURNED	23.09	0.0	23.09
MILLS PER KILOWATT-HOUR	10.44	0.0	10.44
CENTS PER MILLION BTU HEAT INPUT	109.93	0.0	109.93
DOLLARS PER TON OF SULFUR REMOVED	1000.86	0.0	1000.86

PROCESS COST DISCOUNTED AT 11.2% TO INITIAL YEAR, DOLLARS 55535900 0 55535900

LEVELIZED INCREASE (DECREASE) IN UNIT OPERATING COST EQUIVALENT TO DISCOUNTED PROCESS COST OVER LIFE OF POWER UNIT

DOLLARS PER TON OF COAL BURNED	21.18	0.0	21.18
MILLS PER KILOWATT-HOUR	9.58	0.0	9.58
CENTS PER MILLION BTU HEAT INPUT	100.84	0.0	100.84
DOLLARS PER TON OF SULFUR REMOVED	914.92	0.0	914.92

TABLE A-36. LIME SLURRY PROCESS

SUMMARY OF ESTIMATED CAPITAL INVESTMENT

(Variation from base case: 200 MW)

	Investment, $	% of total direct investment
Direct Investment		
Materials handling (feeders, conveyors, elevators, and silos)	1,009,000	8.6
Feed preparation (feeders, slaker, tanks, agitators, and pumps)	403,000	3.5
Gas handling (common feed plenum and booster fans, gas ducts and dampers from plenum to absorber, exhaust gas ducts and dampers from absorber to reheater and stack)	1,857,000	16.0
SO_2 absorption (two mobile-bed scrubbers including presaturator and entrainment separators, tanks, agitators, and pumps)	3,827,000	32.9
Stack gas reheat (two indirect steam reheaters)	564,000	4.8
Solids disposal (onsite disposal facilities including feed tank, agitator, slurry disposal pumps, and pond water return pumps)	1,212,000	10.4
Subtotal	8,872,000	76.2
Services, utilities, and miscellaneous	532,000	4.6
Total process areas excluding pond construction	9,404,000	80.8
Pond construction	2,236,000	19.2
Total direct investment	11,640,000	100.0
Indirect Investment		
Engineering design and supervision	729,000	6.3
Architect and engineering contractor	163,000	1.4
Construction expense	1,860,000	16.0
Contractor fees	620,000	5.3
Total indirect investment	3,372,000	29.0
Contingency	3,002,000	25.8
Total fixed investment	18,014,000	154.8
Other Capital Charges		
Allowance for startup and modifications	1,578,000	13.6
Interest during construction	2,162,000	18.5
Total depreciable investment	21,754,000	186.9
Land	444,000	3.8
Working capital	600,000	5.2
Total capital investment	22,798,000	195.9
	($114/kW)	

Basis
- Evaluation represents project beginning mid-1977, ending mid-1980. Average cost basis for scaling, mid-1979.
- Stack gas reheat to 175°F by indirect steam reheat.
- Minimum in-process storage; only pumps are spared.
- Disposal pond located 1 mile from power plant.
- Investment requirements for fly ash removal and disposal excluded; FGD process investment estimate begins with common feed plenum downstream of the ESP.
- Construction labor shortages with accompanying overtime pay incentive not considered.

TABLE A-37. LIME SLURRY PROCESS

ANNUAL REVENUE REQUIREMENTS

(Variation from base case: 200 MW)

	Annual quantity	Unit cost, $	Total annual cost, $	% of average annual revenue requirements
Direct Costs				
Delivered raw materials				
Lime	28,100 tons	42.00/ton	1,180,200	16.36
Total raw materials cost			1,180,200	16.36
Conversion costs				
Operating labor and supervision	16,440 man-hr	12.50/man-hr	205,500	2.85
Utilities				
Steam	199,700 MBtu	2.00/MBtu	399,400	5.54
Process water	95,100 kgal	0.12/kgal	11,400	0.16
Electricity	19,576,000 kWh	0.031/kWh	606,900	8.41
Maintenance				
Labor and material			913,400	12.66
Analyses	1,980 man-hr	17.00/man-hr	33,700	0.47
Total conversion costs			2,170,300	30.09
Total direct costs			3,350,500	46.45
Indirect Costs				
Capital charges				
Depreciation, interim replacements, and insurance at 6.0% of total depreciable investment			1,305,200	18.09
Average cost of capital and taxes at 8.6% of total capital investment			1,960,600	27.18
Overheads				
Plant, 50% of conversion costs less utilities			576,300	7.99
Administrative, 10% of operating labor			20,600	0.29
Total indirect costs			3,862,700	53.55
Total annual revenue requirements			7,213,200	100.00

	Mills/kWh	$/ton coal burned	$/MBtu heat input	$/ton S removed
Equivalent unit revenue requirements	5.15	11.76	0.56	508

Basis
- Midwest plant location, 1980 revenue requirements.
- Remaining life of power plant, 30 yr.
- Power unit on-stream time, 7,000 hr/yr.
- Coal burned, 613,200 tons/yr, 9,200 Btu/kWh.
- Stack gas reheat to 175°F.
- Sulfur removed, 14,210 short tons/yr; solids disposal, 63,600 tons/yr calcium solids including only hydrate water.
- Investment and revenue requirements for removal and disposal of fly ash excluded.
- Total direct investment, $11,640,000; total depreciable investment, $21,754,000; and total capital investment, $22,798,000.
- All tons shown are 2,000 lb.

TABLE A-38

LIME SLURRY PROCESS VARIATION FROM BASE CASE: 200 MW REGULATED CO. ECONOMICS

TOTAL CAPITAL INVESTMENT 22798000

YEARS AFTER POWER UNIT START	ANNUAL OPERATION, KW-HR/KW	POWER UNIT HEAT REQUIREMENT, MILLION BTU/YEAR	POWER UNIT FUEL CONSUMPTION, TONS COAL/YEAR	SULFUR REMOVED BY POLLUTION CONTROL PROCESS, TONS/YEAR	BY-PRODUCT RATE, EQUIVALENT TONS/YEAR DRY SOLIDS	NET REVENUE, $/TON DRY SOLIDS	TOTAL OP. COST INCLUDING REGULATED ROI FOR POWER COMPANY, $/YEAR	TOTAL NET SALES REVENUE, $/YEAR	NET ANNUAL INCREASE (DECREASE) IN COST OF POWER, $	CUMULATIVE NET INCREASE (DECREASE) IN COST OF POWER, $
1	7000	12880000	613300	14200	63600	0.0	9174000	0	9174000	9174000
2	7000	12880000	613300	14200	63600	0.0	9049200	0	9049200	18223200
3	7000	12880000	613300	14200	63600	0.0	8924500	0	8924500	27147700
4	7000	12880000	613300	14200	63600	0.0	8799800	0	8799800	35947500
5	7000	12880000	613300	14200	63600	0.0	8675100	0	8675100	44622600
6	7000	12880000	613300	14200	63600	0.0	8550400	0	8550400	53173000
7	7000	12880000	613300	14200	63600	0.0	8425700	0	8425700	61598700
8	7000	12880000	613300	14200	63600	0.0	8300900	0	8300900	69899600
9	7000	12880000	613300	14200	63600	0.0	8176200	0	8176200	78075800
10	7000	12880000	613300	14200	63600	0.0	8051500	0	8051500	86127300
11	5000	9200000	438100	10200	45400	0.0	6983100	0	6983100	93110400
12	5000	9200000	438100	10200	45400	0.0	6858400	0	6858400	99968800
13	5000	9200000	438100	10200	45400	0.0	6733600	0	6733600	106702400
14	5000	9200000	438100	10200	45400	0.0	6608900	0	6608900	113311300
15	5000	9200000	438100	10200	45400	0.0	6484200	0	6484200	119795500
16	3500	6440000	306700	7100	31800	0.0	5616300	0	5616300	125411800
17	3500	6440000	306700	7100	31800	0.0	5491600	0	5491600	130903400
18	3500	6440000	306700	7100	31800	0.0	5366900	0	5366900	136270300
19	3500	6440000	306700	7100	31800	0.0	5242100	0	5242100	141512400
20	3500	6440000	306700	7100	31800	0.0	5117400	0	5117400	146629900
21	1500	2760000	131400	3000	13600	0.0	3909800	0	3909800	150539600
22	1500	2760000	131400	3000	13600	0.0	3785100	0	3785100	154324700
23	1500	2760000	131400	3000	13600	0.0	3660400	0	3660400	157985100
24	1500	2760000	131400	3000	13600	0.0	3535700	0	3535700	161520800
25	1500	2760000	131400	3000	13600	0.0	3410900	0	3410900	164931700
26	1500	2760000	131400	3000	13600	0.0	3286200	0	3286200	168217900
27	1500	2760000	131400	3000	13600	0.0	3161500	0	3161500	171379400
28	1500	2760000	131400	3000	13600	0.0	3036800	0	3036800	174416200
29	1500	2760000	131400	3000	13600	0.0	2912100	0	2912100	177328300
30	1500	2760000	131400	3000	13600	0.0	2787400	0	2787400	180115700
TOT 127500		234600000	11171000	254500	1154000		180115700	0	180115700	
LIFETIME AVERAGE INCREASE (DECREASE) IN UNIT OPERATING COST										
DOLLARS PER TON OF COAL BURNED							16.12	0.0	16.12	
MILLS PER KILOWATT-HOUR							7.06	0.0	7.06	
CENTS PER MILLION BTU HEAT INPUT							76.78	0.0	76.78	
DOLLARS PER TON OF SULFUR REMOVED							696.77	0.0	696.77	
PROCESS COST DISCOUNTED AT 11.2% TO INITIAL YEAR, DOLLARS							65974200	0	65974200	
LEVELIZED INCREASE (DECREASE) IN UNIT OPERATING COST EQUIVALENT TO DISCOUNTED PROCESS COST OVER LIFE OF POWER UNIT										
DOLLARS PER TON OF COAL BURNED							14.79	0.0	14.79	
MILLS PER KILOWATT-HOUR							6.48	0.0	6.48	
CENTS PER MILLION BTU HEAT INPUT							70.43	0.0	70.43	
DOLLARS PER TON OF SULFUR REMOVED							638.67	0.0	638.67	

TABLE A-39. LIME SLURRY PROCESS

SUMMARY OF ESTIMATED CAPITAL INVESTMENT

(Variation from base case: 500-MW existing)

	Investment, $	% of total direct investment
Direct Investment		
Materials handling (feeders, conveyors, elevators, and silos)	2,018,000	8.2
Feed preparation (feeders, slaker, tanks, agitators, and pumps)	668,000	2.7
Gas handling (common feed plenum and booster fans, gas ducts and dampers from plenum to absorber, exhaust gas ducts and dampers from absorber to reheater and stack)	5,095,000	20.7
SO_2 absorption (four mobile-bed scrubbers including presaturator and entrainment separators, tanks, agitators, and pumps)	9,014,000	36.6
Stack gas reheat (four indirect steam reheaters)	1,308,000	5.3
Solids disposal (onsite disposal facilities including feed tank, agitator, slurry disposal pumps, and pond water return pumps)	1,778,000	7.2
Subtotal	19,881,000	80.7
Services, utilities, and miscellaneous	1,193,000	4.8
Total process areas excluding pond construction	21,074,000	85.5
Pond construction	3,583,000	14.5
Total direct investment	24,657,000	100.0
Indirect Investment		
Engineering design and supervision	1,065,000	4.3
Architect and engineering contractor	240,000	1.0
Construction expense	3,513,000	14.3
Contractor fees	1,097,000	4.4
Total indirect investment	5,915,000	24.0
Contingency	6,114,000	24.8
Total fixed investment	36,686,000	148.8
Other Capital Charges		
Allowance for startup and modifications	3,310,000	13.4
Interest during construction	4,402,000	17.9
Total depreciable investment	44,398,000	180.1
Land	708,000	2.9
Working capital	1,340,000	5.4
Total capital investment	46,446,000	188.4
	($93/kW)	

Basis
- Evaluation represents project beginning mid-1977, ending mid-1980. Average cost basis for scaling, mid-1979.
- Stack gas reheat to 175°F by indirect steam reheat.
- Minimum in-process storage; only pumps are spared.
- Disposal pond located 1 mile from power plant.
- Investment requirements for fly ash removal and disposal excluded; FGD process investment estimate begins with common feed plenum downstream of the ESP.
- Construction labor shortages with accompanying overtime pay incentive not considered.

TABLE A-40. LIME SLURRY PROCESS

ANNUAL REVENUE REQUIREMENTS

(Variation from base case: 500-MW existing)

	Annual quantity	Unit cost, $	Total annual cost, $	% of average annual revenue requirements
Direct Costs				
Delivered raw materials				
Lime	70,400 tons	42.00/ton	2,956,800	19.05
Total raw materials cost			2,956,800	19.05
Conversion costs				
Operating labor and supervision	25,990 man-hr	12.50/man-hr	324,900	2.09
Utilities				
Steam	499,200 MBtu	2.00/MBtu	998,400	6.43
Process water	237,600 kgal	0.12/kgal	28,500	0.18
Electricity	48,038,000 kWh	0.029/kWh	1,393,100	8.98
Maintenance				
Labor and material			1,793,400	11.57
Analyses	3,760 man-hr	17.00/man-hr	63,900	0.41
Total conversion costs			4,602,200	29.66
Total direct costs			7,559,000	48.71
Indirect Costs				
Capital charges				
Depreciation, interim replacements, and insurance at 6.4% of total depreciable investment			2,841,500	18.31
Average cost of capital and taxes at 8.6% of total capital investment			3,994,300	25.74
Overheads				
Plant, 50% of conversion costs less utilities			1,091,100	7.03
Administrative, 10% of operating labor			32,500	0.21
Total indirect costs			7,959,400	51.29
Total annual revenue requirements			15,518,400	100.00

	Mills/kWh	$/ton coal burned	$/MBtu heat input	$/ton S removed
Equivalent unit revenue requirements	4.43	10.12	0.48	437

Basis
- Midwest plant location, 1980 revenue requirements.
- Remaining life of power plant, 25 yr.
- Power unit on-stream time, 7,000 hr/yr.
- Coal burned, 1,533,350 tons/yr, 9,200 Btu/kWh.
- Stack gas reheat to 175°F.
- Sulfur removed, 35,530 short tons/yr; solids disposal, 159,100 tons/yr calcium solids including only hydrate water.
- Investment and revenue requirement for removal and disposal of fly ash excluded.
- Total direct investment, $24,657,000; total depreciable investment, $44,398,000; and total capital investment, $46,446,000.
- All tons shown are 2,000 lb.

TABLE A-41

LIME SLURRY PROCESS VARIATION FROM BASE CASE: 500 MW EXISTING REGULATED CO. ECONOMICS

TOTAL CAPITAL INVESTMENT 46446000

YEARS AFTER POWER UNIT START	ANNUAL OPERATION, KW-HR/KW	POWER UNIT HEAT REQUIREMENT, MILLION BTU/YEAR	POWER UNIT FUEL CONSUMPTION, TONS COAL/YEAR	SULFUR REMOVED BY POLLUTION CONTROL PROCESS, TONS/YEAR	BY-PRODUCT RATE, EQUIVALENT TONS/YEAR DRY SOLIDS	NET REVENUE, $/TON DRY SOLIDS	TOTAL OP. COST INCLUDING REGULATED ROI FOR POWER COMPANY, $/YEAR	TOTAL NET SALES REVENUE, $/YEAR	NET ANNUAL INCREASE (DECREASE) IN COST OF POWER, $	CUMULATIVE NET INCREASE (DECREASE) IN COST OF POWER, $
1										
2										
3										
4										
5										
6	7000	32200000	1533300	35500	159100	0.0	19808900	0	19808900	19808900
7	7000	32200000	1533300	35500	159100	0.0	19503500	0	19503500	39312400
8	7000	32200000	1533300	35500	159100	0.0	19198000	0	19198000	58510400
9	7000	32200000	1533300	35500	159100	0.0	18892500	0	18892500	77402900
10	7000	32200000	1533300	35500	159100	0.0	18587100	0	18587100	95990000
11	5000	23000000	1095200	25400	113600	0.0	16146000	0	16146000	112136000
12	5000	23000000	1095200	25400	113600	0.0	15840600	0	15840600	127976600
13	5000	23000000	1095200	25400	113600	0.0	15535100	0	15535100	143511700
14	5000	23000000	1095200	25400	113600	0.0	15229700	0	15229700	158741400
15	5000	23000000	1095200	25400	113600	0.0	14924200	0	14924200	173665600
16	3500	16100000	766700	17800	79600	0.0	12950700	0	12950700	186616300
17	3500	16100000	766700	17800	79600	0.0	12645200	0	12645200	199261500
18	3500	16100000	766700	17800	79600	0.0	12339800	0	12339800	211601300
19	3500	16100000	766700	17800	79600	0.0	12034300	0	12034300	223635600
20	3500	16100000	766700	17800	79600	0.0	11728800	0	11728800	235364400
21	1500	6900000	328600	7600	34100	0.0	9025300	0	9025300	244389700
22	1500	6900000	328600	7600	34100	0.0	8719800	0	8719800	253109500
23	1500	6900000	328600	7600	34100	0.0	8414400	0	8414400	261523900
24	1500	6900000	328600	7600	34100	0.0	8108900	0	8108900	269632800
25	1500	6900000	328600	7600	34100	0.0	7803500	0	7803500	277436300
26	1500	6900000	328600	7600	34100	0.0	7498000	0	7498000	284934300
27	1500	6900000	328600	7600	34100	0.0	7192600	0	7192600	292126900
28	1500	6900000	328600	7600	34100	0.0	6887100	0	6887100	299014000
29	1500	6900000	328600	7600	34100	0.0	6581700	0	6581700	305595700
30	1500	6900000	328600	7600	34100	0.0	6276200	0	6276200	311871900
TOT	92500	425500000	20262000	469500	2102500		311871900	0	311871900	

LIFETIME AVERAGE INCREASE (DECREASE) IN UNIT OPERATING COST

DOLLARS PER TON OF COAL BURNED	15.39	0.0	15.39
MILLS PER KILOWATT-HOUR	6.74	0.0	6.74
CENTS PER MILLION BTU HEAT INPUT	73.30	0.0	73.30
DOLLARS PER TON OF SULFUR REMOVED	664.26	0.0	664.26
PROCESS COST DISCOUNTED AT 11.2% TO INITIAL YEAR, DOLLARS	129754600	0	129754600

LEVELIZED INCREASE (DECREASE) IN UNIT OPERATING COST EQUIVALENT TO DISCOUNTED PROCESS COST OVER LIFE OF POWER UNIT

DOLLARS PER TON OF COAL BURNED	13.84	0.0	13.84
MILLS PER KILOWATT-HOUR	6.06	0.0	6.06
CENTS PER MILLION BTU HEAT INPUT	65.92	0.0	65.92
DOLLARS PER TON OF SULFUR REMOVED	597.67	0.0	597.67

TABLE A-42. LIME SLURRY PROCESS

SUMMARY OF ESTIMATED CAPITAL INVESTMENT

(Variation from base case: 2.0% sulfur)

	Investment, $	% of total direct investment
Direct Investment		
Materials handling (feeders, conveyors, elevators, and silos)	1,009,000	5.2
Feed preparation (feeders, slaker, tanks, agitators, and pumps)	430,000	2.2
Gas handling (common feed plenum and booster fans, gas ducts and dampers from plenum to absorber, exhaust gas ducts and dampers from absorber to reheater and stack)	4,102,000	21.2
SO_2 absorption (four mobile-bed scrubbers including presaturator and entrainment separators, tanks, agitators, and pumps)	7,909,000	40.8
Stack gas reheat (four indirect steam reheaters)	1,218,000	6.3
Solids disposal (onsite disposal facilities including feed tank, agitator, slurry disposal pumps, and pond water return pumps)	1,260,000	6.5
Subtotal	15,928,000	82.3
Services, utilities, and miscellaneous	956,000	4.9
Total process areas excluding pond construction	16,884,000	87.2
Pond construction	2,481,000	12.8
Total direct investment	19,365,000	100.0
Indirect Investment		
Engineering design and supervision	1,026,000	5.3
Architect and engineering contractor	236,000	1.2
Construction expense	2,887,000	14.9
Contractor fees	913,000	4.7
Total indirect investment	5,062,000	26.1
Contingency	4,885,000	25.2
Total fixed investment	29,312,000	151.3
Other Capital Charges		
Allowance for startup and modifications	2,683,000	13.9
Interest during construction	3,517,000	18.2
Total depreciable investment	35,512,000	183.4
Land	494,000	2.6
Working capital	941,000	4.9
Total capital investment	36,947,000	190.9
	($74/kW)	

Basis
- Evaluation represents project beginning mid-1977, ending mid-1980. Average cost basis for scaling, mid-1979.
- Stack gas reheat to 175°F by indirect steam reheat.
- Minimum in-process storage; only pumps are spared.
- Disposal pond located 1 mile from power plant.
- Investment requirements for fly ash removal and disposal excluded; FGD process investment estimate begins with common feed plenum downstream of the ESP.
- Construction labor shortages with accompanying overtime pay incentive not considered.

TABLE A-43. LIME SLURRY PROCESS

ANNUAL REVENUE REQUIREMENTS

(Variation from base case: 2.0% sulfur)

	Annual quantity	Unit cost, $	Total annual cost, $	% of average annual revenue requirements
Direct Costs				
Delivered raw materials				
Lime	32,700 tons	42.00/ton	1,373,400	11.73
Total raw materials cost			1,373,400	11.73
Conversion costs				
Operating labor and supervision	23,280 man-hr	12.50/man-hr	291,000	2.48
Utilities				
Steam	488,400 MBtu	2.00/MBtu	976,800	8.34
Process water	200,600 kgal	0.12/kgal	24,100	0.21
Electricity	46,161,000 kWh	0.029/kWh	1,338,700	11.43
Maintenance				
Labor and material			1,425,200	12.17
Analyses	3,370 man-hr	17.00/man-hr	57,300	0.49
Total conversion costs			4,113,100	35.12
Total direct costs			5,486,500	46.85
Indirect Costs				
Capital charges				
Depreciation, interim replacements, and insurance at 6.0% of total depreciable investment			2,130,700	18.19
Average cost of capital and taxes at 8.6% of total capital investment			3,177,500	27.14
Overheads				
Plant, 50% of conversion costs less utilities			886,800	7.57
Administrative, 10% of operating labor			29,100	0.25
Total indirect costs			6,224,100	53.15
Total annual revenue requirements			11,710,600	100.00

	Mills/kWh	$/ton coal burned	$/MBtu heat input	$/ton S removed
Equivalent unit revenue requirements	3.35	7.81	0.37	730

Basis
- Midwest plant location, 1980 revenue requirements.
- Remaining life of power plant, 30 yr.
- Power unit on-stream time, 7,000 hr/yr.
- Coal burned, 1,500,100 tons/yr, 9,000 Btu/kWh.
- Stack gas reheat to 175°F.
- Sulfur removed, 16,050 short tons/yr; solids disposal, 21,000 tons/yr calcium solids including only hydrate water.
- Investment and revenue requirement for removal and disposal of fly ash excluded.
- Total direct investment, $19,365,000; total depreciable investment, $35,512,000; and total capital investment, $36,947,000.
- All tons shown are 2,000 lb.

TABLE A-44

LIME SLURRY PROCESS VARIATION FROM BASE CASE: 2.0% S REGULATED CO. ECONOMICS

TOTAL CAPITAL INVESTMENT 36947000

YEARS AFTER POWER UNIT START	ANNUAL OPERATION, KW-HR/KW	POWER UNIT HEAT REQUIREMENT, MILLION BTU/YEAR	POWER UNIT FUEL CONSUMPTION, TONS COAL/YEAR	SULFUR REMOVED BY POLLUTION CONTROL PROCESS, TONS/YEAR	BY-PRODUCT RATE, EQUIVALENT TONS/YEAR DRY SOLIDS	NET REVENUE, $/TON DRY SOLIDS	TOTAL OP. COST INCLUDING REGULATED ROI FOR POWER COMPANY, $/YEAR	TOTAL NET SALES REVENUE, $/YEAR	NET ANNUAL INCREASE (DECREASE) IN COST OF POWER, $	CUMULATIVE NET INCREASE (DECREASE) IN COST OF POWER, $
1	7000	31500000	1500000	16100	21000	0.0	14888100	0	14888100	14888100
2	7000	31500000	1500000	16100	21000	0.0	14684500	0	14684500	29572600
3	7000	31500000	1500000	16100	21000	0.0	14480900	0	14480900	44053500
4	7000	31500000	1500000	16100	21000	0.0	14277300	0	14277300	58330800
5	7000	31500000	1500000	16100	21000	0.0	14073700	0	14073700	72404500
6	7000	31500000	1500000	16100	21000	0.0	13870100	0	13870100	86274600
7	7000	31500000	1500000	16100	21000	0.0	13666500	0	13666500	99941100
8	7000	31500000	1500000	16100	21000	0.0	13462900	0	13462900	113404000
9	7000	31500000	1500000	16100	21000	0.0	13259300	0	13259300	126663300
10	7000	31500000	1500000	16100	21000	0.0	13055700	0	13055700	139719000
11	5000	22500000	1071400	11500	15000	0.0	11303500	0	11303500	151022500
12	5000	22500000	1071400	11500	15000	0.0	11099900	0	11099900	162122400
13	5000	22500000	1071400	11500	15000	0.0	10896300	0	10896300	173018700
14	5000	22500000	1071400	11500	15000	0.0	10692700	0	10692700	183711400
15	5000	22500000	1071400	11500	15000	0.0	10489100	0	10489100	194200500
16	3500	15750000	750000	8000	10500	0.0	9070600	0	9070600	203271100
17	3500	15750000	750000	8000	10500	0.0	8867000	0	8867000	212138100
18	3500	15750000	750000	8000	10500	0.0	8663400	0	8663400	220801500
19	3500	15750000	750000	8000	10500	0.0	8459800	0	8459800	229261300
20	3500	15750000	750000	8000	10500	0.0	8256300	0	8256300	237517600
21	1500	6750000	321400	3400	4500	0.0	6291800	0	6291800	243809400
22	1500	6750000	321400	3400	4500	0.0	6088200	0	6088200	249897600
23	1500	6750000	321400	3400	4500	0.0	5884600	0	5884600	255782200
24	1500	6750000	321400	3400	4500	0.0	5681000	0	5681000	261463200
25	1500	6750000	321400	3400	4500	0.0	5477400	0	5477400	266940600
26	1500	6750000	321400	3400	4500	0.0	5273800	0	5273800	272214400
27	1500	6750000	321400	3400	4500	0.0	5070200	0	5070200	277284600
28	1500	6750000	321400	3400	4500	0.0	4866600	0	4866600	282151200
29	1500	6750000	321400	3400	4500	0.0	4663000	0	4663000	286814200
30	1500	6750000	321400	3400	4500	0.0	4459400	0	4459400	291273600
TOT	127500	573750000	27321000	292500	382500		291273600	0	291273600	

LIFETIME AVERAGE INCREASE (DECREASE) IN UNIT OPERATING COST

DOLLARS PER TON OF COAL BURNED	10.66	0.0	10.66
MILLS PER KILOWATT-HOUR	4.57	0.0	4.57
CENTS PER MILLION BTU HEAT INPUT	50.77	0.0	50.77
DOLLARS PER TON OF SULFUR REMOVED	995.81	0.0	995.81

PROCESS COST DISCOUNTED AT 11.2% TO INITIAL YEAR, DOLLARS 106927200 0 106927200

LEVELIZED INCREASE (DECREASE) IN UNIT OPERATING COST EQUIVALENT TO DISCOUNTED PROCESS COST OVER LIFE OF POWER UNIT

DOLLARS PER TON OF COAL BURNED	9.80	0.0	9.80
MILLS PER KILOWATT-HOUR	4.20	0.0	4.20
CENTS PER MILLION BTU HEAT INPUT	46.68	0.0	46.68
DOLLARS PER TON OF SULFUR REMOVED	913.91	0.0	913.91

TABLE A-45. LIME SLURRY PROCESS

SUMMARY OF ESTIMATED CAPITAL INVESTMENT

(Base case: 500 MW, 3.5% sulfur)

	Investment, $	% of total direct investment
Direct Investment		
Materials handling (feeders, conveyors, elevators, and silos)	1,978,000	8.3
Feed preparation (feeders, slaker, tanks, agitators, and pumps)	660,000	2.8
Gas handling (common feed plenum and booster fans, gas ducts and dampers from plenum to absorber, exhaust gas ducts and dampers from absorber to reheater and stack)	4,318,000	18.0
SO_2 absorption (four mobile-bed scrubbers including presaturator and entrainment separators, tanks, agitators, and pumps)	8,504,000	35.5
Stack gas reheat (four indirect steam reheaters)	1,282,000	5.3
Solids disposal (onsite disposal facilities including feed tank, agitator, slurry disposal pumps, and pond water return pumps)	1,616,000	6.7
Subtotal	18,358,000	76.6
Services, utilities, and miscellaneous	1,101,000	4.6
Total process areas excluding pond construction	19,459,000	81.2
Pond construction	4,505,000	18.8
Total direct investment	23,964,000	100.0
Indirect Investment		
Engineering design and supervision	1,095,000	4.6
Architect and engineering contractor	243,000	1.0
Construction expense	3,391,000	14.1
Contractor fees	1,073,000	4.5
Total indirect investment	5,802,000	24.2
Contingency	5,953,000	24.8
Total fixed investment	35,719,000	149.0
Other Capital Charges		
Allowance for startup and modifications	3,121,000	13.0
Interest during construction	4,286,000	17.9
Total depreciable investment	43,126,000	179.9
Land	895,000	3.7
Working capital	1,298,000	5.4
Total capital investment	45,319,000	189.0
	($90/kW)	

Basis
- Evaluation represents project beginning mid-1977, ending mid-1980. Average cost basis for scaling, mid-1979.
- Stack gas reheat to 175°F by indirect steam reheat.
- Minimum in-process storage; only pumps are spared.
- Disposal pond located 1 mile from power plant.
- Investment requirements for fly ash removal and disposal excluded; FGD process investment estimate begins with common feed plenum downstream of the ESP.
- Construction labor shortages with accompanying overtime pay incentive not considered.

TABLE A-46. LIME SLURRY PROCESS

ANNUAL REVENUE REQUIREMENTS

(Base case: 500 MW, 3.5% sulfur)

	Annual quantity	Unit cost, $	Total annual cost, $	% of average annual revenue requirements
Direct Costs				
Delivered raw materials				
Lime	68,600 tons	42.00/ton	2,881,200	19.35
Total raw materials cost			2,881,200	19.35
Conversion costs				
Operating labor and supervision	25,990 man-hr	12.50/man-hr	324,900	2.18
Utilities				
Steam	488,400 MBtu	2.00/MBtu	976,800	6.56
Process water	232,600 kgal	0.12/kgal	27,900	0.19
Electricity	47,008,000 kWh	0.029/kWh	1,363,200	9.16
Maintenance				
Labor and material			1,691,900	11.36
Analyses	3,760 man-hr	17.00/man-hr	63,900	0.43
Total conversion costs			4,448,600	29.88
Total direct costs			7,329,800	49.23
Indirect Costs				
Capital charges				
Depreciation, interim replacements, and insurance at 6.0% of total depreciable investment			2,587,600	17.38
Average cost of capital and taxes at 8.6% of total capital investment			3,897,400	26.18
Overheads				
Plant, 50% of conversion costs less utilities			1,040,400	6.99
Administrative, 10% of operating labor			32,500	0.22
Total indirect costs			7,557,900	50.77
Total annual revenue requirements			14,887,700	100.00

	Mills/kWh	$/ton coal burned	$/MBtu heat input	$/ton S removed
Equivalent unit revenue requirements	4.25	9.92	0.47	428

Basis
- Midwest plant location, 1980 revenue requirements.
- Remaining life of power plant, 30 yr.
- Power unit on-stream time, 7,000 hr/yr.
- Coal burned, 1,500,100 tons/yr, 9,000 Btu/kWh.
- Stack gas reheat to 175°F.
- Sulfur removed, 34,750 short tons/yr; solids disposal, 153,600 tons/yr calcium solids including only hydrate water.
- Investment and revenue requirement for removal and disposal of fly ash excluded.
- Total direct investment, $23,964,000; total depreciable investment, $43,126,000; and total capital investment, $45,319,000.
- All tons shown are 2,000 lb.

TABLE A-47

LIME SLURRY PROCESS BASE CASE: 500 MW, 3.5% S REGULATED CO. ECONOMICS

TOTAL CAPITAL INVESTMENT 45319000

YEARS AFTER POWER UNIT START	ANNUAL OPERATION, KW-HR/KW	POWER UNIT HEAT REQUIREMENT, MILLION BTU/YEAR	POWER UNIT FUEL CONSUMPTION, TONS COAL/YEAR	SULFUR REMOVED BY POLLUTION CONTROL PROCESS, TONS/YEAR	BY-PRODUCT RATE, EQUIVALENT TONS/YEAR DRY SOLIDS	NET REVENUE, $/TON DRY SOLIDS	TOTAL OP. COST INCLUDING REGULATED ROI FOR POWER COMPANY, $/YEAR	TOTAL NET SALES REVENUE, $/YEAR	NET ANNUAL INCREASE (DECREASE) IN COST OF POWER, $	CUMULATIVE NET INCREASE (DECREASE) IN COST OF POWER, $
1	7000	31500000	1500000	34800	153600	0.0	18785300	0	18785300	18785300
2	7000	31500000	1500000	34800	153600	0.0	18538000	0	18538000	37323300
3	7000	31500000	1500000	34800	153600	0.0	18290800	0	18290800	55614100
4	7000	31500000	1500000	34800	153600	0.0	18043500	0	18043500	73657600
5	7000	31500000	1500000	34800	153600	0.0	17796300	0	17796300	91453900
6	7000	31500000	1500000	34800	153600	0.0	17549000	0	17549000	109002900
7	7000	31500000	1500000	34800	153600	0.0	17301800	0	17301800	126304700
8	7000	31500000	1500000	34800	153600	0.0	17054500	0	17054500	143359200
9	7000	31500000	1500000	34800	153600	0.0	16807300	0	16807300	160166500
10	7000	31500000	1500000	34800	153600	0.0	16560000	0	16560000	176726500
11	5000	22500000	1071400	24900	109700	0.0	14241300	0	14241300	190967800
12	5000	22500000	1071400	24900	109700	0.0	13994000	0	13994000	204961800
13	5000	22500000	1071400	24900	109700	0.0	13746800	0	13746800	218708600
14	5000	22500000	1071400	24900	109700	0.0	13499500	0	13499500	232208100
15	5000	22500000	1071400	24900	109700	0.0	13252300	0	13252300	245460400
16	3500	15750000	750000	17400	76800	0.0	11388300	0	11388300	256848700
17	3500	15750000	750000	17400	76800	0.0	11141100	0	11141100	267989800
18	3500	15750000	750000	17400	76800	0.0	10893800	0	10893800	278883600
19	3500	15750000	750000	17400	76800	0.0	10646600	0	10646600	289530200
20	3500	15750000	750000	17400	76800	0.0	10399300	0	10399300	299929500
21	1500	6750000	321400	7500	32900	0.0	7830700	0	7830700	307760200
22	1500	6750000	321400	7500	32900	0.0	7583400	0	7583400	315343600
23	1500	6750000	321400	7500	32900	0.0	7336200	0	7336200	322679800
24	1500	6750000	321400	7500	32900	0.0	7088900	0	7088900	329768700
25	1500	6750000	321400	7500	32900	0.0	6841700	0	6841700	336610400
26	1500	6750000	321400	7500	32900	0.0	6594400	0	6594400	343204800
27	1500	6750000	321400	7500	32900	0.0	6347200	0	6347200	349552000
28	1500	6750000	321400	7500	32900	0.0	6099900	0	6099900	355651900
29	1500	6750000	321400	7500	32900	0.0	5852700	0	5852700	361504600
30	1500	6750000	321400	7500	32900	0.0	5605400	0	5605400	367110000
TOT	127500	573750000	27321000	634500	2797500		367110000	0	367110000	
LIFETIME AVERAGE INCREASE (DECREASE) IN UNIT OPERATING COST										
DOLLARS PER TON OF COAL BURNED							13.44	0.0	13.44	
MILLS PER KILOWATT-HOUR							5.76	0.0	5.76	
CENTS PER MILLION BTU HEAT INPUT							63.98	0.0	63.98	
DOLLARS PER TON OF SULFUR REMOVED							578.58	0.0	578.58	
PROCESS COST DISCOUNTED AT 11.6% TO INITIAL YEAR, DOLLARS							135036700	0	135036700	
LEVELIZED INCREASE (DECREASE) IN UNIT OPERATING COST EQUIVALENT TO DISCOUNTED PROCESS COST OVER LIFE OF POWER UNIT										
DOLLARS PER TON OF COAL BURNED							12.38	0.0	12.38	
MILLS PER KILOWATT-HOUR							5.31	0.0	5.31	
CENTS PER MILLION BTU HEAT INPUT							58.95	0.0	58.95	
DOLLARS PER TON OF SULFUR REMOVED							533.32	0.0	533.32	

TABLE A-48. LIME SLURRY PROCESS

SUMMARY OF ESTIMATED CAPITAL INVESTMENT

(Variation from base case: 5.0% sulfur)

	Investment, $	% of total direct investment
Direct Investment		
Materials handling (feeders, conveyors, elevators, and silos)	2,294,000	8.6
Feed preparation (feeders, slaker, tanks, agitators, and pumps)	836,000	3.1
Gas handling (common feed plenum and booster fans, gas ducts and dampers from plenum to absorber, exhaust gas ducts and dampers from absorber to reheater and stack)	4,318,000	16.2
SO_2 absorption (four mobile-bed scrubbers including presaturator and entrainment separators, tanks, agitators, and pumps)	8,504,000	32.0
Stack gas reheat (four indirect steam reheaters)	1,282,000	4.8
Solids disposal (onsite disposal facilities including feed tank, agitator, slurry disposal pumps, and pond water return pumps)	1,907,000	7.2
Subtotal	19,141,000	71.9
Services, utilities, and miscellaneous	1,148,000	4.4
Total process areas excluding pond construction	20,289,000	76.3
Pond construction	6,318,000	23.7
Total direct investment	26,607,000	100.0
Indirect Investment		
Engineering design and supervision	1,148,000	4.3
Architect and engineering contractor	248,000	0.9
Construction expense	3,641,000	13.7
Contractor fees	1,162,000	4.4
Total indirect investment	6,199,000	23.3
Contingency	6,561,000	24.7
Total fixed investment	39,367,000	148.0
Other Capital Charges		
Allowance for startup and modifications	3,305,000	12.4
Interest during construction	4,724,000	17.7
Total depreciable investment	47,396,000	178.1
Land	1,256,000	4.7
Working capital	1,641,000	6.2
Total capital investment	50,293,000	189.0
	($101/kW)	

Basis
Evaluation represents project beginning mid-1977, ending mid-1980. Average cost basis for scaling, mid-1979.
Stack gas reheat to 175°F by indirect steam reheat.
Minimum in-process storage; only pumps are spared.
Disposal pond located 1 mile from power plant.
Investment requirements for fly ash removal and disposal excluded; FGD process investment estimate begins with common feed plenum downstream of the ESP.
Construction labor shortages with accompanying overtime pay incentive not considered.

TABLE A-49. LIME SLURRY PROCESS

ANNUAL REVENUE REQUIREMENTS

(Variation from base case: 5.0% sulfur)

	Annual quantity	Unit cost, $	Total annual cost, $	% of average annual revenue requirements
Direct Costs				
Delivered raw materials				
Lime	105,400 tons	42.00/ton	4,426,800	25.48
Total raw materials cost			4,426,800	25.48
Conversion costs				
Operating labor and supervision	27,910 man-hr	12.50/man-hr	348,900	2.01
Utilities				
Steam	488,400 MBtu	2.00/MBtu	976,800	5.62
Process water	264,500 kgal	0.12/kgal	31,700	0.18
Electricity	47,852,000 kWh	0.029/kWh	1,387,700	7.00
Maintenance				
Labor and material			1,812,700	10.43
Analyses	4,040 man-hr	17.00/man-hr	68,700	0.40
Total conversion costs			4,626,500	26.63
Total direct costs			9,053,300	52.11
Indirect Costs				
Capital charges				
Depreciation, interim replacements, and insurance at 6.0% of total depreciable investment			2,843,800	16.37
Average cost of capital and taxes at 8.6% of total capital investment			4,325,200	24.90
Overheads				
Plant, 50% of conversion costs less utilities			1,115,200	6.42
Administrative, 10% of operating labor			34,900	0.20
Total indirect costs			8,319,100	47.89
Total annual revenue requirements			17,372,400	100.00

	Mills/kWh	$/ton coal burned	$/MBtu heat input	$/ton S removed
Equivalent unit revenue requirements	4.96	11.58	0.55	323

Basis
- Midwest plant location, 1980 revenue requirements.
- Remaining life of power plant, 30 yr.
- Power unit on-stream time, 7,000 hr/yr.
- Coal burned, 1,500,100 tons/yr, 9,000 Btu/kWh.
- Stack gas reheat to 175°F.
- Sulfur removed, 53,730 short tons/yr; solids disposal, 238,700 tons/yr calcium solids including only hydrate water.
- Investment and revenue requirement for removal and disposal of fly ash excluded.
- Total direct investment, $26,607,000; total depreciable investment, $47,396,000; and total capital investment, $50,293,000.
- All tons shown are 2,000 lb.

TABLE A-50

LIME SLURRY PROCESS VARIATION FROM BASE CASE: 5.0% S REGULATED CO. ECONOMICS

TOTAL CAPITAL INVESTMENT 50293000

YEARS AFTER POWER UNIT START	ANNUAL OPERATION, KW-HR/KW	POWER UNIT HEAT REQUIREMENT, MILLION BTU /YEAR	POWER UNIT FUEL CONSUMPTION, TONS COAL /YEAR	SULFUR REMOVED BY POLLUTION CONTROL PROCESS, TONS/YEAR	BY-PRODUCT RATE, EQUIVALENT TONS/YEAR DRY SOLIDS	NET REVENUE, $/TON DRY SOLIDS	TOTAL OP. COST INCLUDING REGULATED ROI FOR POWER COMPANY, $/YEAR	TOTAL NET SALES REVENUE, $/YEAR	NET ANNUAL INCREASE (DECREASE) IN COST OF POWER, $	CUMULATIVE NET INCREASE (DECREASE) IN COST OF POWER, $
1	7000	31500000	1500000	53700	238700	0.0	21697800	0	21697800	21697800
2	7000	31500000	1500000	53700	238700	0.0	21426100	0	21426100	43123900
3	7000	31500000	1500000	53700	238700	0.0	21154300	0	21154300	64278200
4	7000	31500000	1500000	53700	238700	0.0	20882600	0	20882600	85160800
5	7000	31500000	1500000	53700	238700	0.0	20610800	0	20610800	105771600
6	7000	31500000	1500000	53700	238700	0.0	20339100	0	20339100	126110700
7	7000	31500000	1500000	53700	238700	0.0	20067300	0	20067300	146178000
8	7000	31500000	1500000	53700	238700	0.0	19795600	0	19795600	165973600
9	7000	31500000	1500000	53700	238700	0.0	19523900	0	19523900	185497500
10	7000	31500000	1500000	53700	238700	0.0	19252100	0	19252100	204749600
11	5000	22500000	1071400	38400	170500	0.0	16418100	0	16418100	221167700
12	5000	22500000	1071400	38400	170500	0.0	16146300	0	16146300	237314000
13	5000	22500000	1071400	38400	170500	0.0	15874600	0	15874600	253188600
14	5000	22500000	1071400	38400	170500	0.0	15602800	0	15602800	268791400
15	5000	22500000	1071400	38400	170500	0.0	15331100	0	15331100	284122500
16	3500	15750000	750000	26900	119400	0.0	13070000	0	13070000	297192500
17	3500	15750000	750000	26900	119400	0.0	12798200	0	12798200	309990700
18	3500	15750000	750000	26900	119400	0.0	12526500	0	12526500	322517200
19	3500	15750000	750000	26900	119400	0.0	12254700	0	12254700	334771900
20	3500	15750000	750000	26900	119400	0.0	11983000	0	11983000	346754900
21	1500	6750000	321400	11500	51200	0.0	8881100	0	8881100	355636000
22	1500	6750000	321400	11500	51200	0.0	8609400	0	8609400	364245400
23	1500	6750000	321400	11500	51200	0.0	8337700	0	8337700	372583100
24	1500	6750000	321400	11500	51200	0.0	8065900	0	8065900	380649000
25	1500	6750000	321400	11500	51200	0.0	7794200	0	7794200	388443200
26	1500	6750000	321400	11500	51200	0.0	7522400	0	7522400	395965600
27	1500	6750000	321400	11500	51200	0.0	7250700	0	7250700	403216300
28	1500	6750000	321400	11500	51200	0.0	6978900	0	6978900	410195200
29	1500	6750000	321400	11500	51200	0.0	6707200	0	6707200	416902400
30	1500	6750000	321400	11500	51200	0.0	6435500	0	6435500	423337900
TOT 127500		573750000	27321000	978500	4348500		423337900	0	423337900	
LIFETIME AVERAGE INCREASE (DECREASE) IN UNIT OPERATING COST										
DOLLARS PER TON OF COAL BURNED							15.49	0.0	15.49	
MILLS PER KILOWATT-HOUR							6.64	0.0	6.64	
CENTS PER MILLION BTU HEAT INPUT							73.78	0.0	73.78	
DOLLARS PER TON OF SULFUR REMOVED							432.64	0.0	432.64	
PROCESS COST DISCOUNTED AT 11.2% TO INITIAL YEAR, DOLLARS							156135800	0	156135800	
LEVELIZED INCREASE (DECREASE) IN UNIT OPERATING COST EQUIVALENT TO DISCOUNTED PROCESS COST OVER LIFE OF POWER UNIT										
DOLLARS PER TON OF COAL BURNED							14.31	0.0	14.31	
MILLS PER KILOWATT-HOUR							6.13	0.0	6.13	
CENTS PER MILLION BTU HEAT INPUT							68.16	0.0	68.16	
DOLLARS PER TON OF SULFUR REMOVED							399.73	0.0	399.73	

TABLE A-51. LIME SLURRY PROCESS

SUMMARY OF ESTIMATED CAPITAL INVESTMENT

(Variation from base case: 1,000-MW existing)

	Investment, $	% of total direct investment
Direct Investment		
Materials handling (feeders, conveyors, elevators, and silos)	2,967,000	7.7
Feed preparation (feeders, slaker, tanks, agitators, and pumps)	966,000	2.5
Gas handling (common feed plenum and booster fans, gas ducts and dampers from plenum to absorber, exhaust gas ducts and dampers from absorber to reheater and stack)	8,679,000	22.5
SO_2 absorption (four mobile-bed scrubbers including presaturator and entrainment separators, tanks, agitators, and pumps)	13,606,000	35.3
Stack gas reheat (four indirect steam reheaters)	2,026,000	5.3
Solids disposal (onsite disposal facilities including feed tank, agitator, slurry disposal pumps, and pond water return pumps)	2,262,000	5.9
Subtotal	30,506,000	79.2
Services, utilities, and miscellaneous	1,830,000	4.7
Total process areas excluding pond construction	32,336,000	83.9
Pond construction	6,203,000	16.1
Total direct investment	38,539,000	100.0
Indirect Investment		
Engineering design and supervision	1,145,000	3.0
Architect and engineering contractor	248,000	0.6
Construction expense	5,068,000	13.2
Contractor fees	1,540,000	4.0
Total indirect investment	8,001,000	20.8
Contingency	9,308,000	24.1
Total fixed investment	55,848,000	144.9
Other Capital Charges		
Allowance for startup and modifications	4,964,000	12.9
Interest during construction	6,702,000	17.4
Total depreciable investment	67,514,000	175.2
Land	1,238,000	3.2
Working capital	2,346,000	6.1
Total capital investment	71,098,000	184.5
	($71/kW)	

Basis
- Evaluation represents project beginning mid-1977, ending mid-1980. Average cost basis for scaling, mid-1979.
- Stack gas reheat to 175°F by indirect steam reheat.
- Minimum in-process storage; only pumps are spared.
- Disposal pond located 1 mile from power plant.
- Investment requirements for fly ash removal and disposal excluded; FGD process investment estimate begins with common feed plenum downstream of the ESP.
- Construction labor shortages with accompanying overtime pay incentive not considered.

TABLE A-52. LIME SLURRY PROCESS

ANNUAL REVENUE REQUIREMENTS

(Variation from base case: 1,000 MW existing)

	Annual quantity	Unit cost, $	Total annual cost, $	% of average annual revenue requirements
Direct Costs				
Delivered raw materials				
Lime	137,200 tons	42.00/ton	5,762,400	22.70
Total raw materials cost			5,762,400	22.70
Conversion costs				
Operating labor and supervision	36,750 man-hr	12.50/man-hr	459,400	1.81
Utilities				
Steam	976,700 MBtu	2.00/MBtu	1,953,400	7.69
Process water	465,300 kgal	0.12/kgal	55,800	0.22
Electricity	93,415,000 kWh	0.028/kWh	2,615,600	10.30
Maintenance				
Labor and material			2,449,600	9.65
Analyses	6,100 man-hr	17.00/man-hr	103,700	0.41
Total conversion costs			7,637,500	30.08
Total direct costs			13,399,900	52.78
Indirect Costs				
Capital charges				
Depreciation, interim replacements, and insurance at 6.4% of total depreciable investment			4,320,900	17.02
Average cost of capital and taxes at 8.6% of total capital investment			6,114,400	24.09
Overheads				
Plant, 50% of conversion costs less utilities			1,506,400	5.93
Administrative, 10% of operating labor			45,900	0.18
Total indirect costs			11,987,600	47.22
Total annual revenue requirements			25,387,500	100.00

	Mills/kWh	$/ton coal burned	$/MBtu heat input	$/ton S removed
Equivalent unit revenue requirements	3.63	8.46	0.40	365

Basis
- Midwest plant location, 1980 revenue requirements.
- Remaining life of power plant, 25 yr.
- Power unit on-stream time, 7,000 hr/yr.
- Coal burned, 2,999,900 tons/yr, 9,000 Btu/kWh.
- Stack gas reheat to 175°F.
- Sulfur removed, 69,490 short tons/yr; solids disposal, 307,200 tons/yr calcium solids including only hydrate water.
- Investment and revenue requirement for removal and disposal of fly ash excluded.
- Total direct investment, $38,539,000; total depreciable investment, $67,514,000; and total capital investment, $71,098,000.
- All tons shown are 2,000 lb.

TABLE A-53

LIME SLURRY PROCESS VARIATION FROM BASE CASE: 1,000 MW EXISTING REGULATED CO. ECONOMICS

TOTAL CAPITAL INVESTMENT 71098000

YEARS AFTER POWER UNIT START	ANNUAL OPERATION, KW-HR/KW	POWER UNIT HEAT REQUIREMENT, MILLION BTU/YEAR	POWER UNIT FUEL CONSUMPTION, TONS COAL/YEAR	SULFUR REMOVED BY POLLUTION CONTROL PROCESS, TONS/YEAR	BY-PRODUCT RATE, EQUIVALENT TONS/YEAR DRY SOLIDS	NET REVENUE, $/TON DRY SOLIDS	TOTAL OP. COST INCLUDING REGULATED ROI FOR POWER COMPANY, $/YEAR	TOTAL NET SALES REVENUE, $/YEAR	NET ANNUAL INCREASE (DECREASE) IN COST OF POWER, $	CUMULATIVE NET INCREASE (DECREASE) IN COST OF POWER, $
1										
2										
3										
4										
5										
6	7000	63000000	3000000	69500	307200	0.0	31952400	0	31952400	31952400
7	7000	63000000	3000000	69500	307200	0.0	31487900	0	31487900	63440300
8	7000	63000000	3000000	69500	307200	0.0	31023300	0	31023300	94463600
9	7000	63000000	3000000	69500	307200	0.0	30558800	0	30558800	125022400
10	7000	63000000	3000000	69500	307200	0.0	30094300	0	30094300	155116700
11	5000	45000000	2142900	49600	219400	0.0	25832100	0	25832100	180948800
12	5000	45000000	2142900	49600	219400	0.0	25367600	0	25367600	206316400
13	5000	45000000	2142900	49600	219400	0.0	24903100	0	24903100	231219500
14	5000	45000000	2142900	49600	219400	0.0	24438600	0	24438600	255658100
15	5000	45000000	2142900	49600	219400	0.0	23974100	0	23974100	279632200
16	3500	31500000	1500000	34700	153600	0.0	20570400	0	20570400	300202600
17	3500	31500000	1500000	34700	153600	0.0	20105900	0	20105900	320308500
18	3500	31500000	1500000	34700	153600	0.0	19641400	0	19641400	339949900
19	3500	31500000	1500000	34700	153600	0.0	19176900	0	19176900	359126800
20	3500	31500000	1500000	34700	153600	0.0	18712400	0	18712400	377839200
21	1500	13500000	642900	14900	65800	0.0	14090200	0	14090200	391929400
22	1500	13500000	642900	14900	65800	0.0	13625700	0	13625700	405555100
23	1500	13500000	642900	14900	65800	0.0	13161200	0	13161200	418716300
24	1500	13500000	642900	14900	65800	0.0	12696700	0	12696700	431413000
25	1500	13500000	642900	14900	65800	0.0	12232200	0	12232200	443645200
26	1500	13500000	642900	14900	65800	0.0	11767700	0	11767700	455412900
27	1500	13500000	642900	14900	65800	0.0	11303200	0	11303200	466716100
28	1500	13500000	642900	14900	65800	0.0	10838700	0	10838700	477554800
29	1500	13500000	642900	14900	65800	0.0	10374200	0	10374200	487929000
30	1500	13500000	642900	14900	65800	0.0	9909700	0	9909700	497838700
TOT	92500	832500000	39643500	918000	4059000		497838700	0	497838700	

LIFETIME AVERAGE INCREASE (DECREASE) IN UNIT OPERATING COST

DOLLARS PER TON OF COAL BURNED	12.56	0.0	12.56
MILLS PER KILOWATT-HOUR	5.38	0.0	5.38
CENTS PER MILLION BTU HEAT INPUT	59.80	0.0	59.80
DOLLARS PER TON OF SULFUR REMOVED	542.31	0.0	542.31

PROCESS COST DISCOUNTED AT 11.2% TO INITIAL YEAR, DOLLARS 208358300 0 208358300

LEVELIZED INCREASE (DECREASE) IN UNIT OPERATING COST EQUIVALENT TO DISCOUNTED PROCESS COST OVER LIFE OF POWER UNIT

DOLLARS PER TON OF COAL BURNED	11.36	0.0	11.36
MILLS PER KILOWATT-HOUR	4.87	0.0	4.87
CENTS PER MILLION BTU HEAT INPUT	54.10	0.0	54.10
DOLLARS PER TON OF SULFUR REMOVED	490.60	0.0	490.60

TABLE A-54. LIME SLURRY PROCESS

SUMMARY OF ESTIMATED CAPITAL INVESTMENT

(Variation from base case: 1,000 MW)

	Investment, $	% of total direct investment
Direct Investment		
Materials handling (feeders, conveyors, elevators, and silos)	2,670,000	7.4
Feed preparation (feeders, slaker, tanks, agitators, and pumps)	948,000	2.6
Gas handling (common feed plenum and booster fans, gas ducts and dampers from plenum to absorber, exhaust gas ducts and dampers from absorber to reheater and stack)	7,125,000	19.5
SO_2 absorption (four mobile-bed scrubbers including presaturator and entrainment separators, tanks, agitators, and pumps)	12,501,000	34.3
Stack gas reheat (four indirect steam reheaters)	1,872,000	5.1
Solids disposal (onsite disposal facilities including feed tank, agitator, slurry disposal pumps, and pond water return pumps)	2,052,000	5.6
Subtotal	27,168,000	74.5
Services, utilities, and miscellaneous	1,630,000	4.5
Total process areas excluding pond construction	28,798,000	79.0
Pond construction	7,678,000	21.0
Total direct investment	36,476,000	100.0
Indirect Investment		
Engineering design and supervision	1,185,000	3.2
Architect and engineering contractor	251,000	0.7
Construction expense	4,772,000	13.2
Contractor fees	1,477,000	4.0
Total indirect investment	7,685,000	21.1
Contingency	8,832,000	24.2
Total fixed investment	52,993,000	145.3
Other Capital Charges		
Allowance for startup and modifications	4,532,000	12.4
Interest during construction	6,359,000	17.4
Total depreciable investment	63,884,000	175.1
Land	1,530,000	4.2
Working capital	2,240,000	6.1
Total capital investment	67,654,000	185.4
	($68/kW)	

Basis
Evaluation represents project beginning mid-1977, ending mid-1980. Average cost basis for scaling, mid-1979.
Stack gas reheat to 175°F by indirect steam reheat.
Minimum in-process storage; only pumps are spared.
Disposal pond located 1 mile from power plant.
Investment requirements for fly ash removal and disposal excluded; FGD process investment estimate begins with common feed plenum downstream of the ESP.
Construction labor shortages with accompanying overtime pay incentive not considered.

TABLE A-55. LIME SLURRY PROCESS

ANNUAL REVENUE REQUIREMENTS

(Variation from base case: 1,000 MW)

	Annual quantity	Unit cost, $	Total annual cost, $	% of average annual revenue requirements
Direct Costs				
Delivered raw materials				
Lime	131,600 tons	42.00/ton	5,527,200	23.11
Total raw materials cost			5,527,200	23.11
Conversion costs				
Operating labor and supervision	36,750 man-hr	12.50/man-hr	459,400	1.92
Utilities				
Steam	944,200 MBtu	2.00/MBtu	1,888,400	7.90
Process water	503,500 kgal	0.12/kgal	60,400	0.25
Electricity	90,320,000 kWh	0.028/kWh	2,529,000	10.58
Maintenance				
Labor and material			2,246,200	9.39
Analyses	6,100 man-hr	17.00/man-hr	103,700	0.43
Total conversion costs			7,287,100	30.47
Total direct costs			12,814,300	53.58
Indirect Costs				
Capital charges				
Depreciation, interim replacements, and insurance at 6.0% of total depreciable investment			3,833,000	16.03
Average cost of capital and taxes at 8.6% of total capital investment			5,818,200	24.33
Overheads				
Plant, 50% of conversion costs less utilities			1,404,700	5.87
Administrative, 10% of operating labor			45,900	0.19
Total indirect costs			11,101,800	46.42
Total annual revenue requirements			23,916,100	100.00

	Mills/kWh	$/ton coal burned	$/MBtu heat input	$/ton S removed
Equivalent unit revenue requirements	3.42	8.25	0.39	359

Basis
- Midwest plant location, 1980 revenue requirements.
- Remaining life of power plant, 30 yr.
- Power unit on-stream time, 7,000 hr/yr.
- Coal burned, 2,900,100 tons/yr, 8,700 Btu/kWh.
- Stack gas reheat to 175°F.
- Sulfur removed, 66,540 short tons/yr; solids disposal, 297,000 tons/yr calcium solids including only hydrate water.
- Investment and revenue requirement for removal and disposal of fly ash excluded.
- Total direct investment, $36,476,000; total depreciable investment, $63,884,000; and total capital investment, $67,654,000.
- All tons shown are 2,000 lb.

TABLE A-56

LIME SLURRY PROCESS VARIATION FROM BASE CASE: 1,000 MW REGULATED CO. ECONOMICS

TOTAL CAPITAL INVESTMENT 67654000

YEARS AFTER POWER UNIT START	ANNUAL OPERATION, KW-HR/KW	POWER UNIT HEAT REQUIREMENT, MILLION BTU/YEAR	POWER UNIT FUEL CONSUMPTION, TONS COAL/YEAR	SULFUR REMOVED BY POLLUTION CONTROL PROCESS, TONS/YEAR	BY-PRODUCT RATE, EQUIVALENT TONS/YEAR DRY SOLIDS	NET REVENUE, $/TON DRY SOLIDS	TOTAL OP. COST INCLUDING REGULATED ROI FOR POWER COMPANY, $/YEAR	TOTAL NET SALES REVENUE, $/YEAR	NET ANNUAL INCREASE (DECREASE) IN COST OF POWER, $	CUMULATIVE NET INCREASE (DECREASE) IN COST OF POWER, $
1	7000	60900000	2900000	66500	297000	0.0	29734700	0	29734700	29734700
2	7000	60900000	2900000	66500	297000	0.0	29368400	0	29368400	59103100
3	7000	60900000	2900000	66500	297000	0.0	29002100	0	29002100	88105200
4	7000	60900000	2900000	66500	297000	0.0	28635900	0	28635900	116741100
5	7000	60900000	2900000	66500	297000	0.0	28269600	0	28269600	145010700
6	7000	60900000	2900000	66500	297000	0.0	27903300	0	27903300	172914000
7	7000	60900000	2900000	66500	297000	0.0	27537000	0	27537000	200451000
8	7000	60900000	2900000	66500	297000	0.0	27170800	0	27170800	227621800
9	7000	60900000	2900000	66500	297000	0.0	26804500	0	26804500	254426300
10	7000	60900000	2900000	66500	297000	0.0	26438200	0	26438200	280864500
11	5000	43500000	2071400	47500	212100	0.0	22439200	0	22439200	303303700
12	5000	43500000	2071400	47500	212100	0.0	22073000	0	22073000	325376700
13	5000	43500000	2071400	47500	212100	0.0	21706700	0	21706700	347083400
14	5000	43500000	2071400	47500	212100	0.0	21340400	0	21340400	368423800
15	5000	43500000	2071400	47500	212100	0.0	20974200	0	20974200	389398000
16	3500	30450000	1450000	33300	148500	0.0	17798600	0	17798600	407196600
17	3500	30450000	1450000	33300	148500	0.0	17432300	0	17432300	424628900
18	3500	30450000	1450000	33300	148500	0.0	17066000	0	17066000	441694900
19	3500	30450000	1450000	33300	148500	0.0	16699800	0	16699800	458394700
20	3500	30450000	1450000	33300	148500	0.0	16333500	0	16333500	474728200
21	1500	13050000	621400	14300	63600	0.0	11998700	0	11998700	486726900
22	1500	13050000	621400	14300	63600	0.0	11632400	0	11632400	498359300
23	1500	13050000	621400	14300	63600	0.0	11266200	0	11266200	509625500
24	1500	13050000	621400	14300	63600	0.0	10899900	0	10899900	520525400
25	1500	13050000	621400	14300	63600	0.0	10533600	0	10533600	531059000
26	1500	13050000	621400	14300	63600	0.0	10167300	0	10167300	541226300
27	1500	13050000	621400	14300	63600	0.0	9801100	0	9801100	551027400
28	1500	13050000	621400	14300	63600	0.0	9434800	0	9434800	560462200
29	1500	13050000	621400	14300	63600	0.0	9068500	0	9068500	569530700
30	1500	13050000	621400	14300	63600	0.0	8702200	0	8702200	578232900
TOT 127500		1109250000	52821000	1212000	5409000		578232900	0	578232900	

LIFETIME AVERAGE INCREASE (DECREASE) IN UNIT OPERATING COST

DOLLARS PER TON OF COAL BURNED	10.95	0.0	10.95
MILLS PER KILOWATT-HOUR	4.54	0.0	4.54
CENTS PER MILLION BTU HEAT INPUT	52.13	0.0	52.13
DOLLARS PER TON OF SULFUR REMOVED	477.09	0.0	477.09
PROCESS COST DISCOUNTED AT 11.2% TO INITIAL YEAR, DOLLARS	213855700	0	213855700

LEVELIZED INCREASE (DECREASE) IN UNIT OPERATING COST EQUIVALENT TO DISCOUNTED PROCESS COST OVER LIFE OF POWER UNIT

DOLLARS PER TON OF COAL BURNED	10.14	0.0	10.14
MILLS PER KILOWATT-HOUR	4.20	0.0	4.20
CENTS PER MILLION BTU HEAT INPUT	48.29	0.0	48.29
DOLLARS PER TON OF SULFUR REMOVED	442.12	0.0	442.12

TABLE A-57. LIME SLURRY PROCESS

SUMMARY OF ESTIMATED CAPITAL INVESTMENT

(Variation from base case: 90% SO_2 removal)

	Investment, $	% of total direct investment
Direct Investment		
Materials handling (feeders, conveyors, elevators, and silos)	2,176,000	8.8
Feed preparation (feeders, slaker, tanks, agitators, and pumps)	709,000	2.9
Gas handling (common feed plenum and booster fans, gas ducts and dampers from plenum to absorber, exhaust gas ducts and dampers from absorber to reheater and stack)	4,318,000	17.4
SO_2 absorption (four mobile-bed scrubbers including presaturator and entrainment separators, tanks, agitators, and pumps)	8,504,000	34.2
Stack gas reheat (four indirect steam reheaters)	1,282,000	5.2
Solids disposal (onsite disposal facilities including feed tank, agitator, slurry disposal pumps, and pond water return pumps)	1,713,000	6.9
Subtotal	18,702,000	75.4
Services, utilities, and miscellaneous	1,122,000	4.5
Total process areas excluding pond construction	19,824,000	79.9
Pond construction	5,001,000	20.1
Total direct investment	24,825,000	100.0
Indirect Investment		
Engineering design and supervision	1,110,000	4.5
Architect and engineering contractor	244,000	1.0
Construction expense	3,477,000	14.0
Contractor fees	1,103,000	4.4
Total indirect investment	5,934,000	23.9
Contingency	6,152,000	24.8
Total fixed investment	36,911,000	148.7
Other Capital Charges		
Allowance for startup and modifications	3,191,000	12.9
Interest during construction	4,429,000	17.8
Total depreciable investment	44,531,000	179.4
Land	991,000	4.0
Working capital	1,387,000	5.6
Total capital investment	46,909,000	189.0
	($94/kW)	

Basis
- Evaluation represents project beginning mid-1977, ending mid-1980. Average cost basis for scaling, mid-1979.
- Stack gas reheat to 175°F by indirect steam reheat.
- Minimum in-process storage; only pumps are spared.
- Disposal pond located 1 mile from power plant.
- Investment requirements for fly ash removal and disposal excluded; FGD process investment estimate begins with common feed plenum downstream of the ESP.
- Construction labor shortages with accompanying overtime pay incentive not considered.

TABLE A-58. LIME SLURRY PROCESS

ANNUAL REVENUE REQUIREMENTS

(Variation from base case: 90% SO_2 removal)

	Annual quantity	Unit cost, $	Total annual cost, $	% of average annual revenue requirements
Direct Costs				
Delivered raw materials				
Lime	78,400 tons	42.00/ton	3,292,800	21.12
Total raw materials cost			3,292,800	21.12
Conversion costs				
Operating labor and supervision	25,990 man-hr	12.50/man-hr	324,900	2.08
Utilities				
Steam	488,400 MBtu	2.00/MBtu	976,800	6.26
Process water	240,500 kgal	0.12/kgal	28,900	0.19
Electricity	47,226,000 kWh	0.029/kWh	1,369,600	8.78
Maintenance				
Labor and material			1,736,000	11.14
Analyses	3,760 man-hr	17.00/man-hr	63,900	0.41
Total conversion costs			4,500,100	28.86
Total direct costs			7,792,900	49.98
Indirect Costs				
Capital charges				
Depreciation, interim replacements, and insurance at 6.0% of total depreciable investment			2,671,900	17.13
Average cost of capital and taxes at 8.6% of total capital investment			4,034,100	25.87
Overheads				
Plant, 50% of conversion costs less utilities			1,062,400	6.81
Administrative, 10% of operating labor			32,500	0.21
Total indirect costs			7,800,900	50.02
Total annual revenue requirements			15,593,800	100.00

	Mills/kWh	$/ton coal burned	$/MBtu heat input	$/ton S removed
Equivalent unit revenue requirements	4.46	10.40	0.50	392

Basis
- Midwest plant location, 1980 revenue requirements.
- Remaining life of power plant, 30 yr.
- Power unit on-stream time, 7,000 hr/yr.
- Coal burned, 1,500,100 tons/yr, 9,000 Btu/kWh.
- Stack gas reheat to 175°F.
- Sulfur removed, 39,800 short tons/yr; solids disposal, 177,800 tons/yr calcium solids including only hydrate water.
- Investment and revenue requirement for removal and disposal of fly ash excluded.
- Total direct investment, $24,825,000; total depreciable investment, $44,531,000; and total capital investment, $46,909,000.
- All tons shown are 2,000 lb.

TABLE A-59

LIME SLURRY PROCESS VARIATION FROM BASE CASE: 90% SO2 REMOVAL REGULATED CO. ECONOMICS

TOTAL CAPITAL INVESTMENT 46909000

YEARS AFTER POWER UNIT START	ANNUAL OPERATION, KW-HR/KW	POWER UNIT HEAT REQUIREMENT, MILLION BTU/YEAR	POWER UNIT FUEL CONSUMPTION, TONS COAL/YEAR	SULFUR REMOVED BY POLLUTION CONTROL PROCESS, TONS/YEAR	BY-PRODUCT RATE, EQUIVALENT TONS/YEAR DRY SOLIDS	NET REVENUE, $/TON DRY SOLIDS	TOTAL OP. COST INCLUDING REGULATED ROI FOR POWER COMPANY, $/YEAR	TOTAL NET SALES REVENUE, $/YEAR	NET ANNUAL INCREASE (DECREASE) IN COST OF POWER, $	CUMULATIVE NET INCREASE (DECREASE) IN COST OF POWER, $
1	7000	31500000	1500000	39800	177800	0.0	19628100	0	19628100	19628100
2	7000	31500000	1500000	39800	177800	0.0	19372800	0	19372800	39000900
3	7000	31500000	1500000	39800	177800	0.0	19117500	0	19117500	58118400
4	7000	31500000	1500000	39800	177800	0.0	18862200	0	18862200	76980600
5	7000	31500000	1500000	39800	177800	0.0	18606900	0	18606900	95587500
6	7000	31500000	1500000	39800	177800	0.0	18351600	0	18351600	113939100
7	7000	31500000	1500000	39800	177800	0.0	18096200	0	18096200	132035300
8	7000	31500000	1500000	39800	177800	0.0	17840900	0	17840900	149876200
9	7000	31500000	1500000	39800	177800	0.0	17585600	0	17585600	167461800
10	7000	31500000	1500000	39800	177800	0.0	17330300	0	17330300	184792100
11	5000	22500000	1071400	28400	127000	0.0	14871700	0	14871700	199663800
12	5000	22500000	1071400	28400	127000	0.0	14616400	0	14616400	214280200
13	5000	22500000	1071400	28400	127000	0.0	14361000	0	14361000	228641200
14	5000	22500000	1071400	28400	127000	0.0	14105700	0	14105700	242746900
15	5000	22500000	1071400	28400	127000	0.0	13850400	0	13850400	256597300
16	3500	15750000	750000	19900	88900	0.0	11878100	0	11878100	268475400
17	3500	15750000	750000	19900	88900	0.0	11622800	0	11622800	280098200
18	3500	15750000	750000	19900	88900	0.0	11367500	0	11367500	291465700
19	3500	15750000	750000	19900	88900	0.0	11112100	0	11112100	302577800
20	3500	15750000	750000	19900	88900	0.0	10856800	0	10856800	313434600
21	1500	6750000	321400	8500	38100	0.0	8143100	0	8143100	321577700
22	1500	6750000	321400	8500	38100	0.0	7887800	0	7887800	329465500
23	1500	6750000	321400	8500	38100	0.0	7632500	0	7632500	337098000
24	1500	6750000	321400	8500	38100	0.0	7377200	0	7377200	344475200
25	1500	6750000	321400	8500	38100	0.0	7121800	0	7121800	351597000
26	1500	6750000	321400	8500	38100	0.0	6866500	0	6866500	358463500
27	1500	6750000	321400	8500	38100	0.0	6611200	0	6611200	365074700
28	1500	6750000	321400	8500	38100	0.0	6355900	0	6355900	371430600
29	1500	6750000	321400	8500	38100	0.0	6100600	0	6100600	377531200
30	1500	6750000	321400	8500	38100	0.0	5845300	0	5845300	383376500
TOT 127500		573750000	27321000	724500	3238500		383376500	0	383376500	

LIFETIME AVERAGE INCREASE (DECREASE) IN UNIT OPERATING COST

DOLLARS PER TON OF COAL BURNED	14.03	0.0	14.03
MILLS PER KILOWATT-HOUR	6.01	0.0	6.01
CENTS PER MILLION BTU HEAT INPUT	66.82	0.0	66.82
DOLLARS PER TON OF SULFUR REMOVED	529.16	0.0	529.16

PROCESS COST DISCOUNTED AT 11.2% TO INITIAL YEAR, DOLLARS 141124500 0 141124500

LEVELIZED INCREASE (DECREASE) IN UNIT OPERATING COST EQUIVALENT TO DISCOUNTED PROCESS COST OVER LIFE OF POWER UNIT

DOLLARS PER TON OF COAL BURNED	12.94	0.0	12.94
MILLS PER KILOWATT-HOUR	5.54	0.0	5.54
CENTS PER MILLION BTU HEAT INPUT	61.60	0.0	61.60
DOLLARS PER TON OF SULFUR REMOVED	487.65	0.0	487.65

TABLE A-60. LIME SLURRY PROCESS

SUMMARY OF ESTIMATED CAPITAL INVESTMENT

(Variation from base case: oil-fired, existing)

	Investment, $	% of total direct investment
Direct Investment		
Materials handling (feeders, conveyors, elevators, and silos)	1,088,000	5.8
Feed preparation (feeders, slaker, tanks, agitators, and pumps)	420,000	2.2
Gas handling (common feed plenum and booster fans, gas ducts and dampers from plenum to absorber, exhaust gas ducts and dampers from absorber to reheater and stack)	4,448,000	23.7
SO_2 absorption (four mobile-bed scrubbers including presaturator and entrainment separators, tanks, agitators, and pumps)	7,994,000	42.7
Stack gas reheat (four direct oil reheaters)	731,000	3.9
Solids disposal (onsite disposal facilities including feed tank, agitator, slurry disposal pumps, and pond water return pumps)	1,357,000	7.2
Subtotal	16,038,000	85.5
Services, utilities, and miscellaneous	962,000	5.1
Total process areas excluding pond construction	17,000,000	90.6
Pond construction	1,754,000	9.4
Total direct investment	18,754,000	100.0
Indirect Investment		
Engineering design and supervision	998,000	5.3
Architect and engineering contractor	233,000	1.2
Construction expense	2,833,000	15.1
Contractor fees	891,000	4.8
Total indirect investment	4,955,000	26.4
Contingency	4,742,000	25.3
Total fixed investment	28,451,000	151.7
Other Capital Charges		
Allowance for startup and modifications	2,670,000	14.2
Interest during construction	3,414,000	18.2
Total depreciable investment	34,535,000	184.1
Land	357,000	1.9
Working capital	919,000	4.9
Total capital investment	35,811,000	190.9
	($72/kW)	

Basis
Evaluation represents project beginning mid-1977, ending mid-1980. Average cost basis for scaling, mid-1979.
Stack gas reheat to 175°F by indirect steam reheat.
Minimum in-process storage; only pumps are spared.
Disposal pond located 1 mile from power plant.
Investment requirements for fly ash removal and disposal excluded; FGD process investment estimate begins with common feed plenum downstream of the ESP.
Construction labor shortages with accompanying overtime pay incentive not considered.

TABLE A-61. LIME SLURRY PROCESS

ANNUAL REVENUE REQUIREMENTS

(Variation from base case: oil-fired, existing)

	Annual quantity	Unit cost, $	Total annual cost, $	% of average annual revenue requirements
Direct Costs				
Delivered raw materials				
Lime	30,200 tons	42.00/ton	1,268,400	10.95
Total raw materials cost			1,268,400	10.95
Conversion costs				
Operating labor and supervision	24,900 man-hr	12.50/man-hr	311,300	2.69
Utilities				
Oil	2,872,900 gal	0.40/gal	1,149,200	9.93
Process water	173,700 kgal	0.12/kgal	20,800	0.18
Electricity	39,270,000 kWh	0.029/kWh	1,138,800	9.84
Maintenance				
Labor and material			1,412,600	12.20
Analyses	3,600 man-hr	17.00/man-hr	61,200	0.53
Total conversion costs			4,093,900	35.37
Total direct costs			5,362,300	46.32
Indirect Costs				
Capital charges				
Depreciation, interim replacements, and insurance at 6.4% of total depreciable investment			2,210,200	19.09
Average cost of capital and taxes at 8.6% of total capital investment			3,079,800	26.61
Overheads				
Plant, 50% of conversion costs less utilities			892,600	7.71
Administrative, 10% of operating labor			31,100	0.27
Total indirect costs			6,213,700	53.68
Total annual revenue requirements			11,576,000	100.00

	Mills/kWh	$/bbl oil burned	$/MBtu heat input	$/ton S removed
Equivalent unit revenue requirements	3.31	2.16	0.36	778

Basis
- Midwest plant location, 1980 revenue requirements.
- Remaining life of power plant, 25 yr.
- Power unit on-stream time, 7,000 hr/yr.
- Oil burned, 5,350,000 bbl/yr, 9,200 Btu/kWh.
- Stack gas reheat to 175°F.
- Sulfur removed, 14,880 short tons/yr; solids disposal 65,570 tons/yr calcium solids including only hydrate water.
- Investment and revenue requirement for removal and disposal of fly ash excluded.
- Total direct investment, $18,754,000; total depreciable investment, $34,535,000; and total capital investment, $35,811,000.
- All tons shown are 2,000 lb.

TABLE A-62

LIME SLURRY PROCESS VARIATION FROM BASE CASE: OIL-FIRED, EXISTING

TOTAL CAPITAL INVESTMENT 35811000

YEARS AFTER POWER UNIT START	ANNUAL OPERATION, KW-HR/KW	POWER UNIT HEAT REQUIREMENT, MILLION BTU/YEAR	POWER UNIT FUEL CONSUMPTION, BARRELS OIL/YEAR	SULFUR REMOVED BY POLLUTION CONTROL PROCESS, TONS/YEAR	BY-PRODUCT RATE, EQUIVALENT TONS/YEAR DRY SOLIDS	NET REVENUE, $/TON DRY SOLIDS	TOTAL OP. COST INCLUDING REGULATED ROI FOR POWER COMPANY, $/YEAR	TOTAL NET SALES REVENUE, $/YEAR	NET ANNUAL INCREASE (DECREASE) IN COST OF POWER, $	CUMULATIVE NET INCREASE (DECREASE) IN COST OF POWER, $
1										
2										
3										
4										
5										
6	7000	31500000	5208300	14900	14800	0.0	14886100	0	14886100	14886100
7	7000	31500000	5208300	14900	14800	0.0	14648500	0	14648500	29534600
8	7000	31500000	5208300	14900	14800	0.0	14410900	0	14410900	43945500
9	7000	31500000	5208300	14900	14800	0.0	14173300	0	14173300	58118800
10	7000	31500000	5208300	14900	14800	0.0	13935700	0	13935700	72054500
11	5000	22500000	3720200	10600	10600	0.0	12185400	0	12185400	84239900
12	5000	22500000	3720200	10600	10600	0.0	11947800	0	11947800	96187700
13	5000	22500000	3720200	10600	10600	0.0	11710200	0	11710200	107897900
14	5000	22500000	3720200	10600	10600	0.0	11472600	0	11472600	119370500
15	5000	22500000	3720200	10600	10600	0.0	11235000	0	11235000	130605500
16	3500	15750000	2604200	7400	7400	0.0	9808800	0	9808800	140414300
17	3500	15750000	2604200	7400	7400	0.0	9571200	0	9571200	149985500
18	3500	15750000	2604200	7400	7400	0.0	9333600	0	9333600	159319100
19	3500	15750000	2604200	7400	7400	0.0	9096000	0	9096000	168415100
20	3500	15750000	2604200	7400	7400	0.0	8858400	0	8858400	177273500
21	1500	6750000	1116100	3200	3200	0.0	6893700	0	6893700	184167200
22	1500	6750000	1116100	3200	3200	0.0	6656100	0	6656100	190823300
23	1500	6750000	1116100	3200	3200	0.0	6418500	0	6418500	197241800
24	1500	6750000	1116100	3200	3200	0.0	6180900	0	6180900	203422700
25	1500	6750000	1116100	3200	3200	0.0	5943300	0	5943300	209366000
26	1500	6750000	1116100	3200	3200	0.0	5705700	0	5705700	215071700
27	1500	6750000	1116100	3200	3200	0.0	5468100	0	5468100	220539800
28	1500	6750000	1116100	3200	3200	0.0	5230500	0	5230500	225770300
29	1500	6750000	1116100	3200	3200	0.0	4992900	0	4992900	230763200
30	1500	6750000	1116100	3200	3200	0.0	4755300	0	4755300	235518500
TOT	92500	416250000	68824500	196500	196000		235518500	0	235518500	

LIFETIME AVERAGE INCREASE (DECREASE) IN UNIT OPERATING COST

DOLLARS PER BARREL OF OIL BURNED	3.42	0.0	3.42
MILLS PER KILOWATT-HOUR	5.09	0.0	5.09
CENTS PER MILLION BTU HEAT INPUT	56.58	0.0	56.58
DOLLARS PER TON OF SULFUR REMOVED	1198.57	0.0	1198.57
PROCESS COST DISCOUNTED AT 11.2% TO INITIAL YEAR, DOLLARS	97713200	0	97713200

LEVELIZED INCREASE (DECREASE) IN UNIT OPERATING COST EQUIVALENT TO DISCOUNTED PROCESS COST OVER LIFE OF POWER UNIT

DOLLARS PER BARREL OF OIL BURNED	3.07	0.0	3.07
MILLS PER KILOWATT-HOUR	4.57	0.0	4.57
CENTS PER MILLION BTU HEAT INPUT	50.75	0.0	50.75
DOLLARS PER TON OF SULFUR REMOVED	1074.95	0.0	1074.95

TABLE A-63. LIME SLURRY PROCESS WITH CALCINATION

SUMMARY OF ESTIMATED CAPITAL INVESTMENT

(Variation from base case: 200-MW existing)

	Investment, $	% of total direct investment
Direct Investment		
Materials handling (hoppers, feeders, conveyors, elevators, bins, shaker, puller, and mobile equipment)	1,558,000	10.7
Limestone calcination (feeders, crusher, ball mill, fans, bins, rotary kiln, waste heat boilers, and elevators)	2,273,000	15.6
Feed preparation (feeders, slaker, tanks, agitators, and pumps)	437,000	3.0
Gas handling (common feed plenum and booster fans, gas ducts and dampers from plenum to absorber, exhaust gas ducts and dampers from reheater and stack)	2,202,000	15.1
SO_2 absorption (two mobile-bed scrubbers including presaturator and entrainment separators, recirculation tanks, agitators, and pumps)	4,082,000	28.0
Stack gas reheat (two indirect steam reheaters)	590,000	4.1
Solids disposal (onsite disposal, slurry disposal pumps, and pond water return pumps)	1,357,000	9.3
Subtotal	12,499,000	85.8
Services, utilities, and miscellaneous	750,000	5.2
Total process areas excluding pond construction	13,249,000	91.0
Pond construction	1,316,000	9.0
Total direct investment	14,565,000	100.0
Indirect Investment		
Engineering design and supervision	1,001,000	6.9
Architect and engineering contractor	237,000	1.6
Construction expense	2,298,000	15.8
Contractor fees	735,000	5.0
Total indirect investment	4,271,000	29.3
Contingency	3,767,000	25.9
Total fixed investment	22,603,000	155.2
Other Capital Charges		
Allowance for startup and modifications	2,129,000	14.6
Interest during construction	2,712,000	18.6
Total depreciable investment	27,444,000	188.4
Land	265,000	1.8
Working capital	583,000	4.0
Total capital investment	28,292,000	194.2
	($141/kW)	

Basis
Evaluation represents project beginning mid-1977, ending mid-1980. Average cost basis for scaling, mid-1979.
Stack gas reheat to 175°F by indirect steam reheat.
Minimum in-process storage; only pumps are spared.
Disposal pond located 1 mile from power plant.
Investment requirements for fly ash removal and disposal excluded; FGD process investment estimate begins with common feed plenum downstream of the ESP.
Construction labor shortages with accompanying overtime pay incentive not considered.

TABLE A-64. LIME SLURRY PROCESS WITH CALCINATION

ANNUAL REVENUE REQUIREMENTS

(Variation from base case: 200-MW existing)

	Annual quantity	Unit cost, $	Total annual cost, $	% of average annual revenue requirements
Direct Costs				
Delivered raw materials				
Limestone	54,640 tons	7.00/ton	382,500	4.54
Coal	8,290 tons	25.00/ton	207,300	2.46
Total raw materials cost			589,800	7.00
Conversion costs				
Operating labor and supervision	23,830 man-hr	12.50/man-hr	297,900	3.53
Utilities				
Steam	206,200 MBtu	2.00/MBtu	412,400	4.89
Process water	101,000 kgal	0.12/kgal	12,100	0.14
Electricity	22,396,000 kWh	0.031/kWh	694,300	8.24
Heat credit	10,600 MBtu	2.00/MBtu	(21,200)	(0.25)
Maintenance				
Labor and material			1,231,900	14.62
Analyses	2,480 man-hr	17.00/man-hr	42,200	0.50
Total conversion costs			2,669,600	31.67
Total direct costs			3,259,400	38.67
Indirect Costs				
Capital charges				
Depreciation, interim replacements, and insurance at 7.0% of total depreciable investment			1,921,100	22.79
Average cost of capital and taxes at 8.6% of total capital investment			2,433,100	28.86
Overheads				
Plant, 50% of conversion costs less utilities			786,000	9.33
Administrative, 10% of operating labor			29,800	0.35
Total indirect costs			5,170,000	61.33
Total annual revenue requirements			8,429,400	100.00

	Mills/kWh	$/ton coal burned	$/MBtu heat input	$/ton S removed
Equivalent unit revenue requirements	6.02	13.31	0.63	575

Basis
- Midwest plant location, 1980 revenue requirements.
- Remaining life of power plant, 20 yr.
- Power unit on-stream time, 7,000 hr/yr.
- Coal burned, 633,500 tons/yr, 9,500 Btu/kWh.
- Stack gas reheat to 175°F.
- Sulfur removed, 14,670 short tons/yr; solids disposal 64,800 tons/yr calcium solids including only hydrate water.
- Investment and revenue requirement for removal and disposal of fly ash excluded.
- Total direct investment, $14,565,000; total depreciable investment, $27,444,000; and total capital investment, $28,292,000.
- All tons shown are 2,000 lb.

TABLE A-65

LIME SLURRY PROCESS WITH CALCINATION VARIATION FROM BASE CASE: 200 MW EXISTING REGULATED CO. ECONOMICS

TOTAL CAPITAL INVESTMENT 28292000

YEARS AFTER POWER UNIT START	ANNUAL OPERATION, KW-HR/KW	POWER UNIT HEAT REQUIREMENT, MILLION BTU/YEAR	POWER UNIT FUEL CONSUMPTION, TONS COAL/YEAR	SULFUR REMOVED BY POLLUTION CONTROL PROCESS, TONS/YEAR	BY-PRODUCT RATE, EQUIVALENT TONS/YEAR DRY SOLIDS	NET REVENUE, $/TON DRY SOLIDS	TOTAL OP. COST INCLUDING REGULATED ROI FOR POWER COMPANY, $/YEAR	TOTAL NET SALES REVENUE, $/YEAR	NET ANNUAL INCREASE (DECREASE) IN COST OF POWER, $	CUMULATIVE NET INCREASE (DECREASE) IN COST OF POWER, $
1										
2										
3										
4										
5										
6										
7										
8										
9										
10										
11	5000	9500000	452400	10500	46300	0.0	10409000	0	10409000	10409000
12	5000	9500000	452400	10500	46300	0.0	10173000	0	10173000	20582000
13	5000	9500000	452400	10500	46300	0.0	9937000	0	9937000	30519000
14	5000	9500000	452400	10500	46300	0.0	9701000	0	9701000	40220000
15	5000	9500000	452400	10500	46300	0.0	9465000	0	9465000	49685000
16	3500	6650000	316700	7300	32400	0.0	8496800	0	8496800	58181800
17	3500	6650000	316700	7300	32400	0.0	8260800	0	8260800	66442600
18	3500	6650000	316700	7300	32400	0.0	8024800	0	8024800	74467400
19	3500	6650000	316700	7300	32400	0.0	7788800	0	7788800	82256200
20	3500	6650000	316700	7300	32400	0.0	7552800	0	7552800	89809000
21	1500	2850000	135700	3100	13900	0.0	6214500	0	6214500	96023500
22	1500	2850000	135700	3100	13900	0.0	5978500	0	5978500	102002000
23	1500	2850000	135700	3100	13900	0.0	5742500	0	5742500	107744500
24	1500	2850000	135700	3100	13900	0.0	5506500	0	5506500	113251000
25	1500	2850000	135700	3100	13900	0.0	5270500	0	5270500	118521500
26	1500	2850000	135700	3100	13900	0.0	5034400	0	5034400	123555900
27	1500	2850000	135700	3100	13900	0.0	4798400	0	4798400	128354300
28	1500	2850000	135700	3100	13900	0.0	4562400	0	4562400	132916700
29	1500	2850000	135700	3100	13900	0.0	4326400	0	4326400	137243100
30	1500	2850000	135700	3100	13900	0.0	4090400	0	4090400	141333500
TOT	57500	109250000	5202500	120000	532500		141333500	0	141333500	
LIFETIME AVERAGE INCREASE (DECREASE) IN UNIT OPERATING COST										
DOLLARS PER TON OF COAL BURNED							27.17	0.0	27.17	
MILLS PER KILOWATT-HOUR							12.29	0.0	12.29	
CENTS PER MILLION BTU HEAT INPUT							129.37	0.0	129.37	
DOLLARS PER TON OF SULFUR REMOVED							1177.78	0.0	1177.78	
PROCESS COST DISCOUNTED AT 11.2% TO INITIAL YEAR, DOLLARS							65007700	0	65007700	
LEVELIZED INCREASE (DECREASE) IN UNIT OPERATING COST EQUIVALENT TO DISCOUNTED PROCESS COST OVER LIFE OF POWER UNIT										
DOLLARS PER TON OF COAL BURNED							24.79	0.0	24.79	
MILLS PER KILOWATT-HOUR							11.21	0.0	11.21	
CENTS PER MILLION BTU HEAT INPUT							118.03	0.0	118.03	
DOLLARS PER TON OF SULFUR REMOVED							1070.97	0.0	1070.97	

TABLE A-66. LIME SLURRY PROCESS WITH CALCINATION

SUMMARY OF ESTIMATED CAPITAL INVESTMENT

(Variation from base case: 200 MW)

	Investment, $	% of total direct investment
Direct Investment		
Materials handling (hoppers, feeders, conveyors, elevators, bins, shaker, puller, and mobile equipment)	1,529,000	10.5
Limestone calcination (feeders, crusher, ball mill, fans, bins, rotary kiln, waste heat boilers, and elevators)	2,233,000	15.3
Feed preparation (feeders, slaker, tanks, agitators, and pumps)	403,000	2.8
Gas handling (common feed plenum and booster fans, gas ducts and dampers from plenum to absorber, exhaust gas ducts and dampers from reheater and stack)	1,857,000	12.8
SO_2 absorption (two mobile-bed scrubbers including presaturator and entrainment separators, recirculation tanks, agitators, and pumps)	3,827,000	26.3
Stack gas reheat (two indirect steam reheaters)	564,000	3.9
Solids disposal (onsite disposal, slurry disposal pumps, and pond water return pumps)	1,212,000	0.8
Subtotal	11,625,000	79.8
Services, utilities, and miscellaneous	698,000	4.8
Total process areas excluding pond construction	12,323,000	84.6
Pond construction	2,236,000	15.4
Total direct investment	14,559,000	100.0
Indirect Investment		
Engineering design and supervision	1,040,000	7.1
Architect and engineering contractor	240,000	1.6
Construction expense	2,264,000	15.6
Contractor fees	735,000	5.0
Total indirect investment	4,279,000	29.4
Contingency	3,768,000	25.9
Total fixed investment	22,606,000	155.3
Other Capital Charges		
Allowance for startup and modifications	2,037,000	1.4
Interest during construction	2,713,000	18.6
Total depreciable investment	27,356,000	187.9
Land	451,000	3.1
Working capital	564,000	3.9
Total capital investment	28,371,000	194.9
	($142/kW)	

Basis
- Evaluation represents project beginning mid-1977, ending mid-1980. Average cost basis for scaling, mid-1979.
- Stack gas reheat to 175°F by indirect steam reheat.
- Minimum in-process storage; only pumps are spared.
- Disposal pond located 1 mile from power plant.
- Investment requirements for fly ash removal and disposal excluded; FGD process investment estimate begins with common feed plenum downstream of the ESP.
- Construction labor shortages with accompanying overtime pay incentive not considered.

TABLE A-67. LIME SLURRY PROCESS WITH CALCINATION

ANNUAL REVENUE REQUIREMENTS

(Variation from base case: 200 MW)

	Annual quantity	Unit cost, $	Total annual cost, $	% of average annual revenue requirements
Direct Costs				
Delivered raw materials				
Limestone	52,910 tons	7.00/ton	370,400	4.62
Coal	8,030 tons	25.00/ton	200,800	2.50
Total raw materials cost			571,200	7.12
Conversion costs				
Operating labor and supervision	23,830 man-hr	12.50/man-hr	297,900	3.71
Utilities				
Steam	199,700 MBtu	2.00/MBtu	399,400	4.98
Process water	97,800 kgal	0.12/kgal	11,700	0.15
Electricity	21,790,400 kWh	0.031/kWh	675,500	8.42
Heat credit	10,300 MBtu	2.00/MBtu	(20,600)	(0.26)
Maintenance				
Labor and material			1,176,200	14.66
Analyses	2,480 man-hr	17.00/man-hr	42,200	0.53
Total conversion costs			2,582,300	32.19
Total direct costs			3,153,500	39.31
Indirect Costs				
Capital charges				
Depreciation, interim replacements, and insurance at 6.0% of total depreciable investment			1,641,400	20.46
Average cost of capital and taxes at 8.6% of total capital investment			2,439,900	30.41
Overheads				
Plant, 50% of conversion costs less utilities			758,200	9.45
Administrative, 10% of operating labor			29,800	0.37
Total indirect costs			4,869,300	60.69
Total annual revenue requirements			8,022,800	100.00

	Mills/kWh	$/ton coal burned	$/MBtu heat input	$/ton S removed
Equivalent unit revenue requirements	5.73	13.08	0.62	565

Basis
- Midwest plant location, 1980 revenue requirements.
- Remaining life of power plant, 30 yr.
- Power unit on-stream time, 7,000 hr/yr.
- Coal burned, 613,200 tons/yr, 9,200 Btu/kWh.
- Stack gas reheat to 175°F.
- Sulfur removed, 14,210 short tons/yr; solids disposal 63,600 tons/yr calcium solids including only hydrate water.
- Investment and revenue requirement for removal and disposal of fly ash excluded.
- Total direct investment, $14,559,000; total depreciable investment, $27,356,000; and total capital investment, $28,371,000.
- All tons shown are 2,000 lb.

TABLE A-68

LIME SLURRY PROCESS WITH CALCINATION VARIATION FROM BASE CASE: 200 MW REGULATED CO. ECONOMICS

TOTAL CAPITAL INVESTMENT 28371000

YEARS AFTER POWER UNIT START	ANNUAL OPERATION, KW-HR/KW	POWER UNIT HEAT REQUIREMENT, MILLION BTU/YEAR	POWER UNIT FUEL CONSUMPTION, TONS COAL/YEAR	SULFUR REMOVED BY POLLUTION CONTROL PROCESS, TONS/YEAR	BY-PRODUCT RATE, EQUIVALENT TONS/YEAR DRY SOLIDS	NET REVENUE, $/TON DRY SOLIDS	TOTAL OP. COST INCLUDING REGULATED ROI FOR POWER COMPANY, $/YEAR	TOTAL NET SALES REVENUE, $/YEAR	NET ANNUAL INCREASE (DECREASE) IN COST OF POWER, $	CUMULATIVE NET INCREASE (DECREASE) IN COST OF POWER, $
1	7000	12880000	613300	14200	56600	0.0	10463600	0	10463600	10463600
2	7000	12880000	613300	14200	56600	0.0	10306800	0	10306800	20770400
3	7000	12880000	613300	14200	56600	0.0	10149900	0	10149900	30920300
4	7000	12880000	613300	14200	56600	0.0	9993100	0	9993100	40913400
5	7000	12880000	613300	14200	56600	0.0	9836200	0	9836200	50749600
6	7000	12880000	613300	14200	56600	0.0	9679400	0	9679400	60429000
7	7000	12880000	613300	14200	56600	0.0	9522500	0	9522500	69951500
8	7000	12880000	613300	14200	56600	0.0	9365700	0	9365700	79317200
9	7000	12880000	613300	14200	56600	0.0	9208800	0	9208800	88526000
10	7000	12880000	613300	14200	56600	0.0	9052000	0	9052000	97578000
11	5000	9200000	438100	10200	40400	0.0	8012800	0	8012800	105590800
12	5000	9200000	438100	10200	40400	0.0	7856000	0	7856000	113446800
13	5000	9200000	438100	10200	40400	0.0	7699200	0	7699200	121146000
14	5000	9200000	438100	10200	40400	0.0	7542300	0	7542300	128688300
15	5000	9200000	438100	10200	40400	0.0	7385500	0	7385500	136073800
16	3500	6440000	306700	7100	28300	0.0	6520800	0	6520800	142594600
17	3500	6440000	306700	7100	28300	0.0	6364000	0	6364000	148958600
18	3500	6440000	306700	7100	28300	0.0	6207100	0	6207100	155165700
19	3500	6440000	306700	7100	28300	0.0	6050300	0	6050300	161216000
20	3500	6440000	306700	7100	28300	0.0	5893400	0	5893400	167109400
21	1500	2760000	131400	3000	12100	0.0	4670300	0	4670300	171779700
22	1500	2760000	131400	3000	12100	0.0	4513400	0	4513400	176293100
23	1500	2760000	131400	3000	12100	0.0	4356600	0	4356600	180649700
24	1500	2760000	131400	3000	12100	0.0	4199700	0	4199700	184849400
25	1500	2760000	131400	3000	12100	0.0	4042900	0	4042900	188892300
26	1500	2760000	131400	3000	12100	0.0	3886000	0	3886000	192778300
27	1500	2760000	131400	3000	12100	0.0	3729200	0	3729200	196507500
28	1500	2760000	131400	3000	12100	0.0	3572300	0	3572300	200079800
29	1500	2760000	131400	3000	12100	0.0	3415500	0	3415500	203495300
30	1500	2760000	131400	3000	12100	0.0	3258700	0	3258700	206754000
TOT 127500		234600000	11171000	258500	1030500		206754000	0	206754000	
LIFETIME AVERAGE INCREASE (DECREASE) IN UNIT OPERATING COST										
DOLLARS PER TON OF COAL BURNED							18.51	0.0	18.51	
MILLS PER KILOWATT-HOUR							8.11	0.0	8.11	
CENTS PER MILLION BTU HEAT INPUT							88.13	0.0	88.13	
DOLLARS PER TON OF SULFUR REMOVED							799.82	0.0	799.82	
PROCESS COST DISCOUNTED AT 11.2% TO INITIAL YEAR, DOLLARS							75143000	0	75143000	
LEVELIZED INCREASE (DECREASE) IN UNIT OPERATING COST EQUIVALENT TO DISCOUNTED PROCESS COST OVER LIFE OF POWER UNIT										
DOLLARS PER TON OF COAL BURNED							16.85	0.0	16.85	
MILLS PER KILOWATT-HOUR							7.38	0.0	7.38	
CENTS PER MILLION BTU HEAT INPUT							80.22	0.0	80.22	
DOLLARS PER TON OF SULFUR REMOVED							727.42	0.0	727.42	

TABLE A-69. LIME SLURRY PROCESS WITH CALCINATION

SUMMARY OF ESTIMATED CAPITAL INVESTMENT

(Variation from base case: 500-MW existing)

	Investment, $	% of total direct investment
Direct Investment		
Materials handling (hoppers, feeders, conveyors, elevators, bins, shaker, puller, and mobile equipment)	2,604,000	8.9
Limestone calcination (feeders, crusher, ball mill, fans, bins, rotary kiln, waste heat boilers, and elevators)	3,698,000	12.7
Feed preparation (feeders, slaker, tanks, agitators, and pumps)	668,000	2.3
Gas handling (common feed plenum and booster fans, gas ducts and dampers from plenum to absorber, exhaust gas ducts and dampers from reheater and stack)	5,095,000	17.4
SO_2 absorption (four mobile-bed scrubbers including presaturator and entrainment separators, recirculation tanks, agitators, and pumps)	9,014,000	30.9
Stack gas reheat (four indirect steam reheaters)	1,308,000	4.5
Solids disposal (onsite disposal, slurry disposal pumps, and pond water return pumps)	1,778,000	6.1
Subtotal	24,165,000	82.8
Services, utilities, and miscellaneous	1,450,000	5.0
Total process areas excluding pond construction	25,615,000	87.7
Pond construction	3,583,000	12.3
Total direct investment	29,198,000	100.0
Indirect Investment		
Engineering design and supervision	1,653,000	5.7
Architect and engineering contractor	386,000	1.3
Construction expense	4,065,000	13.9
Contractor fees	1,247,000	4.3
Total indirect investment	7,351,000	25.2
Contingency	7,310,000	25.0
Total fixed investment	43,859,000	150.2
Other Capital Charges		
Allowance for startup and modifications	4,028,000	13.8
Interest during construction	5,263,000	18.0
Total depreciable investment	53,150,000	182.0
Land	722,000	2.5
Working capital	1,167,000	4.0
Total capital investment	55,039,000	188.5
	($110/kW)	

Basis
- Evaluation represents project beginning mid-1977, ending mid-1980. Average cost basis for scaling, mid-1979.
- Stack gas reheat to 175°F by indirect steam reheat.
- Minimum in-process storage; only pumps are spared.
- Disposal pond located 1 mile from power plant.
- Investment requirements for fly ash removal and disposal excluded; FGD process investment estimate begins with common feed plenum downstream of the ESP.
- Construction labor shortages with accompanying overtime pay incentive not considered.

TABLE A-70. LIME SLURRY PROCESS WITH CALCINATION

ANNUAL REVENUE REQUIREMENTS

(Variation from base case: 500-MW existing)

	Annual quantity	Unit cost, $	Total annual cost, $	% of average annual revenue requirements
Direct Costs				
Delivered raw materials				
Limestone	132,280 tons	7.00/ton	926,000	5.71
Coal	20,060 tons	25.00/ton	501,500	3.10
Total raw materials cost			1,427,500	8.81
Conversion costs				
Operating labor and supervision	37,670 man-hr	12.50/man-hr	470,900	2.91
Utilities				
Steam	499,200 MBtu	2.00/MBtu	998,400	6.16
Process water	244,500 kgal	0.12/kgal	29,300	0.18
Electricity	53,370,900 kWh	0.029/kWh	1,547,800	9.56
Heat credit	25,700 MBtu	2.00/MBtu	(51,400)	(0.32)
Maintenance				
Labor and material			2,156,700	13.32
Analyses	4,700 man-hr	17.00/man-hr	79,900	0.50
Total conversion costs			5,231,500	32.31
Total direct costs			6,659,000	41.12
Indirect Costs				
Capital charges				
Depreciation, interim replacements, and insurance at 6.4% of total depreciable investment			3,401,600	21.00
Average cost of capital and taxes at 8.6% of total capital investment			4,733,400	29.22
Overheads				
Plant, 50% of conversion costs less utilities			1,353,800	8.36
Administrative, 10% of operating labor			47,100	0.29
Total indirect costs			9,535,900	58.88
Total annual revenue requirements			16,194,900	100.00

	Mills/kWh	$/ton coal burned	$/MBtu heat input	$/ton S removed
Equivalent unit revenue requirements	4.63	10.56	0.50	456

Basis
- Midwest plant location, 1980 revenue requirements.
- Remaining life of power plant, 25 yr.
- Power unit on-stream time, 7,000 hr/yr.
- Coal burned, 1,533,350 tons/yr, 9,200 Btu/kWh.
- Stack gas reheat to 175°F.
- Sulfur removed, 35,530 short tons/yr; solids disposal 159,100 tons/yr calcium solids including only hydrate water.
- Investment and revenue requirement for removal and disposal of fly ash excluded.
- Total direct investment, $29,198,000; total depreciable investment, $53,150,000; and total capital investment, $55,039,000.
- All tons shown are 2,000 lb.

TABLE A-71

LIME SLURRY PROCESS WITH CALCINATION VARIATION FROM BASE CASE: 500 MW EXISTING REGULATED CO. ECONOMICS

TOTAL CAPITAL INVESTMENT 55039000

YEARS AFTER POWER UNIT START	ANNUAL OPERATION, KW-HR/KW	POWER UNIT HEAT REQUIREMENT, MILLION BTU/YEAR	POWER UNIT FUEL CONSUMPTION, TONS COAL/YEAR	SULFUR REMOVED BY POLLUTION CONTROL PROCESS, TONS/YEAR	BY-PRODUCT RATE, EQUIVALENT TONS/YEAR DRY SOLIDS	NET REVENUE, $/TON DRY SOLIDS	TOTAL OP. COST INCLUDING REGULATED ROI FOR POWER COMPANY, $/YEAR	TOTAL NET SALES REVENUE, $/YEAR	NET ANNUAL INCREASE (DECREASE) IN COST OF POWER, $	CUMULATIVE NET INCREASE (DECREASE) IN COST OF POWER, $
1										
2										
3										
4										
5										
6	7000	32200000	1533300	35500	159100	0.0	21284300	0	21284300	21284300
7	7000	32200000	1533300	35500	159100	0.0	20918600	0	20918600	42202900
8	7000	32200000	1533300	35500	159100	0.0	20553000	0	20553000	62755900
9	7000	32200000	1533300	35500	159100	0.0	20187300	0	20187300	82943200
10	7000	32200000	1533300	35500	159100	0.0	19821600	0	19821600	102764800
11	5000	23000000	1095200	25400	113600	0.0	17584600	0	17584600	120349400
12	5000	23000000	1095200	25400	113600	0.0	17219000	0	17219000	137568400
13	5000	23000000	1095200	25400	113600	0.0	16853300	0	16853300	154421700
14	5000	23000000	1095200	25400	113600	0.0	16487600	0	16487600	170909300
15	5000	23000000	1095200	25400	113600	0.0	16122000	0	16122000	187031300
16	3500	16100000	766700	17800	79600	0.0	14270800	0	14270800	201302100
17	3500	16100000	766700	17800	79600	0.0	13905100	0	13905100	215207200
18	3500	16100000	766700	17800	79600	0.0	13539400	0	13539400	228746600
19	3500	16100000	766700	17800	79600	0.0	13173800	0	13173800	241920400
20	3500	16100000	766700	17800	79600	0.0	12808100	0	12808100	254728500
21	1500	6900000	328600	7600	34100	0.0	10244300	0	10244300	264972800
22	1500	6900000	328600	7600	34100	0.0	9878700	0	9878700	274851500
23	1500	6900000	328600	7600	34100	0.0	9513000	0	9513000	284364500
24	1500	6900000	328600	7600	34100	0.0	9147300	0	9147300	293511800
25	1500	6900000	328600	7600	34100	0.0	8781600	0	8781600	302293400
26	1500	6900000	328600	7600	34100	0.0	8416000	0	8416000	310709400
27	1500	6900000	328600	7600	34100	0.0	8050300	0	8050300	318759700
28	1500	6900000	328600	7600	34100	0.0	7684600	0	7684600	326444300
29	1500	6900000	328600	7600	34100	0.0	7319000	0	7319000	333763300
30	1500	6900000	328600	7600	34100	0.0	6953300	0	6953300	340716600
TOT	92500	425500000	20262000	469500	2102500		340716600	0	340716600	

LIFETIME AVERAGE INCREASE (DECREASE) IN UNIT OPERATING COST

DOLLARS PER TON OF COAL BURNED	16.82	0.0	16.82
MILLS PER KILOWATT-HOUR	7.37	0.0	7.37
CENTS PER MILLION BTU HEAT INPUT	80.07	0.0	80.07
DOLLARS PER TON OF SULFUR REMOVED	725.70	0.0	725.70

PROCESS COST DISCOUNTED AT 11.2% TO INITIAL YEAR, DOLLARS 140392600 0 140392600

LEVELIZED INCREASE (DECREASE) IN UNIT OPERATING COST EQUIVALENT TO DISCOUNTED PROCESS COST OVER LIFE OF POWER UNIT

DOLLARS PER TON OF COAL BURNED	14.98	0.0	14.98
MILLS PER KILOWATT-HOUR	6.56	0.0	6.56
CENTS PER MILLION BTU HEAT INPUT	71.33	0.0	71.33
DOLLARS PER TON OF SULFUR REMOVED	646.67	0.0	646.67

TABLE A-72. LIME SLURRY PROCESS WITH CALCINATION

SUMMARY OF ESTIMATED CAPITAL INVESTMENT

(Variation from base case: 2% sulfur)

	Investment, $	% of total direct investment
Direct Investment		
Materials handling (hoppers, feeders, conveyors, elevators, bins, shaker, puller, and mobile equipment)	1,637,000	7.3
Limestone calcination (feeders, crusher, ball mill, fans, bins, rotary kiln, waste heat boilers, and elevators)	2,383,000	10.6
Feed preparation (feeders, slaker, tanks, agitators, and pumps)	430,000	1.9
Gas handling (common feed plenum and booster fans, gas ducts and dampers from plenum to absorber, exhaust gas ducts and dampers from reheater and stack)	4,102,000	18.2
SO_2 absorption (four mobile-bed scrubbers including presaturator and entrainment separators, recirculation tanks, agitators, and pumps)	7,909,000	35.1
Stack gas reheat (four indirect steam reheaters)	1,218,000	5.4
Solids disposal (onsite disposal, slurry disposal pumps, and pond water return pumps)	1,260,000	5.6
Subtotal	18,939,000	84.0
Services, utilities, and miscellaneous	1,136,000	5.0
Total process areas excluding pond construction	20,075,000	89.0
Pond construction	2,481,000	11.0
Total direct investment	22,556,000	100.0
Indirect Investment		
Engineering design and supervision	1,614,000	7.2
Architect and engineering contractor	383,000	1.7
Construction expense	3,290,000	14.6
Contractor fees	1,025,000	4.5
Total indirect investment	6,312,000	28.0
Contingency	5,774,000	25.6
Total fixed investment	34,642,000	153.6
Other Capital Charges		
Allowance for startup and modifications	3,216,000	14.3
Interest during construction	4,157,000	18.4
Total depreciable investment	42,015,000	186.3
Land	501,000	2.2
Working capital	891,000	4.0
Total capital investment	43,407,000	192.5
	($87/kW)	

Basis
Evaluation represents project beginning mid-1977, ending mid-1980. Average cost basis for scaling, mid-1979.
Stack gas reheat to 175°F by indirect steam reheat.
Minimum in-process storage; only pumps are spared.
Disposal pond located 1 mile from power plant.
Investment requirements for fly ash removal and disposal excluded; FGD process investment estimate begins with common feed plenum downstream of the ESP.
Construction labor shortages with accompanying overtime pay incentive not considered.

TABLE A-73. LIME SLURRY PROCESS WITH CALCINATION

ANNUAL REVENUE REQUIREMENTS

(Variation from base case: 2.0% sulfur)

	Annual quantity	Unit cost, $	Total annual cost, $	% of average annual revenue requirements
Direct Costs				
Delivered raw materials				
Limestone	59,540 tons	7.00/ton	416,800	3.31
Coal	9,030 tons	25.00/ton	225,800	1.79
Total raw materials cost			642,600	5.10
Conversion costs				
Operating labor and supervision	33,750 man-hr	12.50/man-hr	421,900	3.35
Utilities				
Steam	488,400 MBtu	2.00/MBtu	976,800	7.75
Process water	202,800 kgal	0.12/kgal	24,300	0.19
Electricity	49,082,500 kWh	0.029/kWh	1,423,400	11.30
Heat credit	11,500 MBtu	2.00/MBtu	(23,000)	(0.18)
Maintenance				
Labor and material			1,680,400	13.34
Analyses	4,210 man-hr	17.00/man-hr	71,600	0.56
Total conversion costs			4,575,400	36.31
Total direct costs			5,218,000	41.41
Indirect Costs				
Capital charges				
Depreciation, interim replacements, and insurance at 6.0% of total depreciable investment			2,520,900	20.01
Average cost of capital and taxes at 8.6% of total capital investment			3,733,000	29.62
Overheads				
Plant, 50% of conversion costs less utilities			1,087,000	8.63
Administrative, 10% of operating labor			42,200	0.33
Total indirect costs			7,383,100	58.59
Total annual revenue requirements			12,601,100	100.00

	Mills/kWh	$/ton coal burned	$/MBtu heat input	$/ton S removed
Equivalent unit revenue requirements	3.60	8.40	0.40	785

Basis
- Midwest plant location, 1980 revenue requirements.
- Remaining life of power plant, 30 yr.
- Power unit on-stream time, 7,000 hr/yr.
- Coal burned, 1,500,100 tons/yr, 9,000 Btu/kWh.
- Stack gas reheat to 175°F.
- Sulfur removed, 16,050 short tons/yr; solids disposal 21,000 tons/yr calcium solids including only hydrate water.
- Investment and revenue requirement for removal and disposal of fly ash excluded.
- Total direct investment, $22,556,000; total depreciable investment, $42,015,000; and total capital investment, $43,407,000.
- All tons shown are 2,000 lb.

TABLE A-74

LIME SLURRY PROCESS WITH CALCINATION VARIATION FROM BASE CASE: 2.0% S REGULATED CO. ECONOMICS

TOTAL CAPITAL INVESTMENT 43407000

YEARS AFTER POWER UNIT START	ANNUAL OPERATION, KW-HR/KW	POWER UNIT HEAT REQUIREMENT, MILLION BTU/YEAR	POWER UNIT FUEL CONSUMPTION, TONS COAL/YEAR	SULFUR REMOVED BY POLLUTION CONTROL PROCESS, TONS/YEAR	BY-PRODUCT RATE, EQUIVALENT TONS/YEAR DRY SOLIDS	NET REVENUE, $/TON DRY SOLIDS	TOTAL OP. COST INCLUDING REGULATED ROI FOR POWER COMPANY, $/YEAR	TOTAL NET SALES REVENUE, $/YEAR	NET ANNUAL INCREASE (DECREASE) IN COST OF POWER, $	CUMULATIVE NET INCREASE (DECREASE) IN COST OF POWER, $
1	7000	31500000	1500000	16100	21000	0.0	16335500	0	16335500	16335500
2	7000	31500000	1500000	16100	21000	0.0	16094600	0	16094600	32430100
3	7000	31500000	1500000	16100	21000	0.0	15853700	0	15853700	48283800
4	7000	31500000	1500000	16100	21000	0.0	15612800	0	15612800	63896600
5	7000	31500000	1500000	16100	21000	0.0	15372000	0	15372000	79268600
6	7000	31500000	1500000	16100	21000	0.0	15131100	0	15131100	94399700
7	7000	31500000	1500000	16100	21000	0.0	14890200	0	14890200	109289900
8	7000	31500000	1500000	16100	21000	0.0	14649300	0	14649300	123939200
9	7000	31500000	1500000	16100	21000	0.0	14408400	0	14408400	138347600
10	7000	31500000	1500000	16100	21000	0.0	14167500	0	14167500	152515100
11	5000	22500000	1071400	11500	15000	0.0	12460700	0	12460700	164975800
12	5000	22500000	1071400	11500	15000	0.0	12219900	0	12219900	177195700
13	5000	22500000	1071400	11500	15000	0.0	11979000	0	11979000	189174700
14	5000	22500000	1071400	11500	15000	0.0	11738100	0	11738100	200912800
15	5000	22500000	1071400	11500	15000	0.0	11497200	0	11497200	212410000
16	3500	15750000	750000	8000	10500	0.0	10091100	0	10091100	222501100
17	3500	15750000	750000	8000	10500	0.0	9850200	0	9850200	232351300
18	3500	15750000	750000	8000	10500	0.0	9609300	0	9609300	241960600
19	3500	15750000	750000	8000	10500	0.0	9368500	0	9368500	251329100
20	3500	15750000	750000	8000	10500	0.0	9127600	0	9127600	260456700
21	1500	6750000	321400	3400	4500	0.0	7158500	0	7158500	267615200
22	1500	6750000	321400	3400	4500	0.0	6917600	0	6917600	274532800
23	1500	6750000	321400	3400	4500	0.0	6676700	0	6676700	281209500
24	1500	6750000	321400	3400	4500	0.0	6435800	0	6435800	287645300
25	1500	6750000	321400	3400	4500	0.0	6194900	0	6194900	293840200
26	1500	6750000	321400	3400	4500	0.0	5954100	0	5954100	299794300
27	1500	6750000	321400	3400	4500	0.0	5713200	0	5713200	305507500
28	1500	6750000	321400	3400	4500	0.0	5472300	0	5472300	310979800
29	1500	6750000	321400	3400	4500	0.0	5231400	0	5231400	316211200
30	1500	6750000	321400	3400	4500	0.0	4990500	0	4990500	321201700
TOT	127500	573750000	27321000	292500	382500		321201700	0	321201700	
LIFETIME AVERAGE INCREASE (DECREASE) IN UNIT OPERATING COST										
DOLLARS PER TON OF COAL BURNED							11.76	0.0	11.76	
MILLS PER KILOWATT-HOUR							5.04	0.0	5.04	
CENTS PER MILLION BTU HEAT INPUT							55.98	0.0	55.98	
DOLLARS PER TON OF SULFUR REMOVED							1098.13	0.0	1098.13	
PROCESS COST DISCOUNTED AT 11.2% TO INITIAL YEAR, DOLLARS							117199000	0	117199000	
LEVELIZED INCREASE (DECREASE) IN UNIT OPERATING COST EQUIVALENT TO DISCOUNTED PROCESS COST OVER LIFE OF POWER UNIT										
DOLLARS PER TON OF COAL BURNED							10.74	0.0	10.74	
MILLS PER KILOWATT-HOUR							4.60	0.0	4.60	
CENTS PER MILLION BTU HEAT INPUT							51.16	0.0	51.16	
DOLLARS PER TON OF SULFUR REMOVED							1001.70	0.0	1001.70	

TABLE A-75. LIME SLURRY PROCESS WITH CALCINATION

SUMMARY OF ESTIMATED CAPITAL INVESTMENT

(Base case: 500 MW, 3.5% sulfur)

	Investment, $	% of total direct investment
Direct Investment		
Materials handling (hoppers, feeders, conveyors, elevators, bins, shaker, puller, and mobile equipment)	2,570,000	9.0
Limestone calcination (feeders, crusher, ball mill, fans, bins, rotary kiln, waste heat boilers, and elevators)	3,654,000	12.8
Feed preparation (feeders, slaker, tanks, agitators, and pumps)	660,000	2.3
Gas handling (common feed plenum and booster fans, gas ducts and dampers from plenum to absorber, exhaust gas ducts and dampers from reheater and stack)	4,318,000	15.2
SO_2 absorption (four mobile-bed scrubbers including presaturator and entrainment separators, recirculation tanks, agitators, and pumps)	8,504,000	29.9
Stack gas reheat (four indirect steam reheaters)	1,282,000	4.5
Solids disposal (onsite disposal, slurry disposal pumps, and pond water return pumps)	1,616,000	5.7
Subtotal	22,604,000	79.4
Services, utilities, and miscellaneous	1,356,000	4.8
Total process areas excluding pond construction	23,960,000	84.2
Pond construction	4,505,000	15.8
Total direct investment	28,465,000	100.0
Indirect Investment		
Engineering design and supervision	1,683,000	5.9
Architect and engineering contractor	389,000	1.4
Construction expense	3,944,000	13.8
Contractor fees	1,223,000	4.3
Total indirect investment	7,239,000	25.4
Contingency	7,141,000	25.1
Total fixed investment	42,845,000	150.5
Other Capital Charges		
Allowance for startup and modifications	3,834,000	13.5
Interest during construction	5,142,000	18.1
Total depreciable investment	51,821,000	182.1
Land	909,000	3.2
Working capital	1,130,000	4.0
Total capital investment	53,860,000	189.3
	($108/kW)	

Basis
Evaluation represents project beginning mid-1977, ending mid-1980. Average cost basis for scaling, mid-1979.
Stack gas reheat to 175°F by indirect steam reheat.
Minimum in-process storage; only pumps are spared.
Disposal pond located 1 mile from power plant.
Investment requirements for fly ash removal and disposal excluded; FGD process investment estimate begins with common feed plenum downstream of the ESP.
Construction labor shortages with accompanying overtime pay incentive not considered.

TABLE A-76. LIME SLURRY PROCESS WITH CALCINATION

ANNUAL REVENUE REQUIREMENTS

(Base case: 500 MW, 3.5% sulfur)

	Annual quantity	Unit cost, $	Total annual cost, $	% of average annual revenue requirements
Direct Costs				
Delivered raw materials				
Limestone	129,400 tons	7.00/ton	905,800	5.83
Coal	19,630 tons	25.00/ton	490,800	3.15
Total raw materials cost			1,396,600	8.98
Conversion costs				
Operating labor and supervision	37,670 man-hr	12.50/man-hr	470,900	3.03
Utilities				
Steam	488,400 MBtu	2.00/MBtu	976,800	6.28
Process water	235,600 kgal	0.12/kgal	28,300	0.18
Electricity	52,224,800 kWh	0.029/kWh	1,514,500	9.73
Heat credit	25,100 MBtu	2.00/MBtu	(50,200)	(0.32)
Maintenance				
Labor and material			2,052,000	13.19
Analyses	4,700 man-hr	17.00/man-hr	79,900	0.51
Total conversion costs			5,072,200	32.60
Total direct costs			6,468,800	41.58
Indirect Costs				
Capital charges				
Depreciation, interim replacements, and insurance at 6.0% of total depreciable investment			3,109,300	19.98
Average cost of capital and taxes at 8.6% of total capital investment			4,631,900	29.78
Overheads				
Plant, 50% of conversion costs less utilities			1,301,400	8.36
Administrative, 10% of operating labor			47,100	0.30
Total indirect costs			9,089,700	58.42
Total annual revenue requirements			15,558,500	100.00

	Mills/kWh	$/ton coal burned	$/MBtu heat input	$/ton S removed
Equivalent unit revenue requirements	4.45	10.37	0.49	448

Basis
- Midwest plant location, 1980 revenue requirements.
- Remaining life of power plant, 30 yr.
- Power unit on-stream time, 7,000 hr/yr.
- Coal burned, 1,500,100 tons/yr, 9,000 Btu/kWh.
- Stack gas reheat to 175°F.
- Sulfur removed, 34,750 short tons/yr; solids disposal 153,600 tons/yr calcium solids including only hydrate water.
- Investment and revenue requirement for removal and disposal of fly ash excluded.
- Total direct investment, $28,465,000; total depreciable investment, $51,821,000; and total capital investment, $53,860,000.
- All tons shown are 2,000 lb.

TABLE A-77

LIME SLURRY PROCESS WITH CALCINATION BASE CASE: 500 MW 3.5% S REGULATED CO. ECONOMICS

TOTAL CAPITAL INVESTMENT 53860000

YEARS AFTER POWER UNIT START	ANNUAL OPERATION, KW-HR/KW	POWER UNIT HEAT REQUIREMENT, MILLION BTU/YEAR	POWER UNIT FUEL CONSUMPTION, TONS COAL/YEAR	SULFUR REMOVED BY POLLUTION CONTROL PROCESS, TONS/YEAR	BY-PRODUCT RATE, EQUIVALENT TONS/YEAR DRY SOLIDS	NET REVENUE, $/TON DRY SOLIDS	TOTAL OP. COST INCLUDING REGULATED ROI FOR POWER COMPANY, $/YEAR	TOTAL NET SALES REVENUE, $/YEAR	NET ANNUAL INCREASE (DECREASE) IN COST OF POWER, $	CUMULATIVE NET INCREASE (DECREASE) IN COST OF POWER, $
1	7000	31500000	1500000	34800	153600	0.0	20192200	0	20192200	20192200
2	7000	31500000	1500000	34800	153600	0.0	19895100	0	19895100	40087300
3	7000	31500000	1500000	34800	153600	0.0	19598000	0	19598000	59685300
4	7000	31500000	1500000	34800	153600	0.0	19300900	0	19300900	78986200
5	7000	31500000	1500000	34800	153600	0.0	19003800	0	19003800	97990000
6	7000	31500000	1500000	34800	153600	0.0	18706700	0	18706700	116696700
7	7000	31500000	1500000	34800	153600	0.0	18409500	0	18409500	135106200
8	7000	31500000	1500000	34800	153600	0.0	18112400	0	18112400	153218600
9	7000	31500000	1500000	34800	153600	0.0	17815300	0	17815300	171033900
10	7000	31500000	1500000	34800	153600	0.0	17518200	0	17518200	188552100
11	5000	22500000	1071400	24900	109700	0.0	15402800	0	15402800	203954900
12	5000	22500000	1071400	24900	109700	0.0	15105700	0	15105700	219060600
13	5000	22500000	1071400	24900	109700	0.0	14808600	0	14808600	233869200
14	5000	22500000	1071400	24900	109700	0.0	14511500	0	14511500	248380700
15	5000	22500000	1071400	24900	109700	0.0	14214300	0	14214300	262595000
16	3500	15750000	750000	17400	76800	0.0	12474700	0	12474700	275069700
17	3500	15750000	750000	17400	76800	0.0	12177600	0	12177600	287247300
18	3500	15750000	750000	17400	76800	0.0	11880500	0	11880500	299127800
19	3500	15750000	750000	17400	76800	0.0	11583400	0	11583400	310711200
20	3500	15750000	750000	17400	76800	0.0	11286300	0	11286300	321997500
21	1500	6750000	321400	7500	32900	0.0	8857000	0	8857000	330854500
22	1500	6750000	321400	7500	32900	0.0	8559900	0	8559900	339414400
23	1500	6750000	321400	7500	32900	0.0	8262700	0	8262700	347677100
24	1500	6750000	321400	7500	32900	0.0	7965600	0	7965600	355642700
25	1500	6750000	321400	7500	32900	0.0	7668500	0	7668500	363311200
26	1500	6750000	321400	7500	32900	0.0	7371400	0	7371400	370682600
27	1500	6750000	321400	7500	32900	0.0	7074300	0	7074300	377756900
28	1500	6750000	321400	7500	32900	0.0	6777200	0	6777200	384534100
29	1500	6750000	321400	7500	32900	0.0	6480100	0	6480100	391014200
30	1500	6750000	321400	7500	32900	0.0	6182900	0	6182900	397197100
TOT	127500	573750000	27321000	634500	2797500		397197100	0	397197100	

LIFETIME AVERAGE INCREASE (DECREASE) IN UNIT OPERATING COST

DOLLARS PER TON OF COAL BURNED	14.54	0.0	14.54
MILLS PER KILOWATT-HOUR	6.23	0.0	6.23
CENTS PER MILLION BTU HEAT INPUT	69.23	0.0	69.23
DOLLARS PER TON OF SULFUR REMOVED	626.00	0.0	626.00

PROCESS COST DISCOUNTED AT 11.2% TO INITIAL YEAR, DOLLARS 144893700 0 144893700

LEVELIZED INCREASE (DECREASE) IN UNIT OPERATING COST EQUIVALENT TO DISCOUNTED PROCESS COST OVER LIFE OF POWER UNIT

DOLLARS PER TON OF COAL BURNED	13.28	0.0	13.28
MILLS PER KILOWATT-HOUR	5.69	0.0	5.69
CENTS PER MILLION BTU HEAT INPUT	63.25	0.0	63.25
DOLLARS PER TON OF SULFUR REMOVED	572.25	0.0	572.25

TABLE A-78. LIME SLURRY PROCESS WITH CALCINATION

SUMMARY OF ESTIMATED CAPITAL INVESTMENT

(Variation from base case: 5% sulfur)

	Investment, $	% of total direct investment
Direct Investment		
Materials handling (hoppers, feeders, conveyors, elevators, bins, shaker, puller, and mobile equipment)	3,300,000	10.1
Limestone calcination (feeders, crusher, ball mill, fans, bins, rotary kiln, waste heat boilers, and elevators)	4,630,000	14.2
Feed preparation (feeders, slaker, tanks, agitators, and pumps)	836,000	2.6
Gas handling (common feed plenum and booster fans, gas ducts and dampers from plenum to absorber, exhaust gas ducts and dampers from reheater and stack)	4,318,000	13.3
SO_2 absorption (four mobile-bed scrubbers including presaturator and entrainment separators, recirculation tanks, agitators, and pumps)	8,504,000	26.1
Stack gas reheat (four indirect steam reheaters)	1,282,000	3.9
Solids disposal (onsite disposal, slurry disposal pumps, and pond water return pumps)	1,907,000	5.9
Subtotal	24,777,000	76.0
Services, utilities, and miscellaneous	1,487,000	4.6
Total process areas excluding pond construction	26,264,000	80.6
Pond construction	6,318,000	19.4
Total direct investment	32,582,000	100.0
Indirect Investment		
Engineering design and supervision	1,735,000	5.3
Architect and engineering contractor	395,000	1.2
Construction expense	4,368,000	13.4
Contractor fees	1,356,000	4.2
Total indirect investment	7,854,000	24.1
Contingency	8,087,000	24.8
Total fixed investment	48,523,000	148.9
Other Capital Charges		
Allowance for startup and modifications	4,220,000	13.0
Interest during construction	5,823,000	17.8
Total depreciable investment	58,566,000	179.7
Land	1,277,000	3.9
Working capital	1,344,000	4.2
Total capital investment	61,187,000	187.8
	($122/kW)	

Basis
Evaluation represents project beginning mid-1977, ending mid-1980. Average cost basis for scaling, mid-1979.
Stack gas reheat to 175°F by indirect steam reheat.
Minimum in-process storage; only pumps are spared.
Disposal pond located 1 mile from power plant.
Investment requirements for fly ash removal and disposal excluded; FGD process investment estimate begins with common feed plenum downstream of the ESP.
Construction labor shortages with accompanying overtime pay incentive not considered.

TABLE A-79. LIME SLURRY PROCESS WITH CALCINATION

ANNUAL REVENUE REQUIREMENTS

(Variation from base case: 5.0% sulfur)

	Annual quantity	Unit cost, $	Total annual cost, $	% of average annual revenue requirements
Direct Costs				
Delivered raw materials				
Limestone	199,040 tons	7.00/ton	1,393,300	7.81
Coal	30,190 tons	25.00/ton	754,800	4.23
Total raw materials cost			2,148,100	12.04
Conversion costs				
Operating labor and supervision	40,460 man-hr	12.50/man-hr	505,800	2.84
Utilities				
Steam	488,400 MBtu	2.00/MBtu	976,800	5.48
Process water	275,000 kgal	0.12/kgal	33,000	0.18
Electricity	55,356,700 kWh	0.029/kWh	1,605,300	9.00
Heat credit	38,600 MBtu	2.00/MBtu	(77,200)	(0.43)
Maintenance				
Labor and material			2,290,700	12.84
Analyses	5,050 man-hr	17.00/man-hr	85,900	0.48
Total conversion costs			5,420,300	30.39
Total direct costs			7,568,400	42.43
Indirect Costs				
Capital charges				
Depreciation, interim replacements, and insurance at 6.0% of total depreciable investment			3,514,000	19.70
Average cost of capital and taxes at 8.6% of total capital investment			5,262,100	29.50
Overheads				
Plant, 50% of conversion costs less utilities			1,441,200	8.08
Administrative, 10% of operating labor			50,600	0.29
Total indirect costs			10,267,900	57.57
Total annual revenue requirements			17,836,300	100.00

	Mills/kWh	$/ton coal burned	$/MBtu heat input	$/ton S removed
Equivalent unit revenue requirements	5.10	11.89	0.57	332

Basis
- Midwest plant location, 1980 revenue requirements.
- Remaining life of power plant, 30 yr.
- Power unit on-stream time, 7,000 hr/yr.
- Coal burned, 1,500,100 tons/yr, 9,000 Btu/kWh.
- Stack gas reheat to 175°F.
- Sulfur removed, 53,730 short tons/yr; solids disposal 238,700 tons/yr calcium solids including only hydrate water.
- Investment and revenue requirement for removal and disposal of fly ash excluded.
- Total direct investment, $32,582,000; total depreciable investment, $58,566,000; and total capital investment, $61,187,000.
- All tons shown are 2,000 lb.

TABLE A-80

LIME SLURRY PROCESS WITH CALCINATION VARIATION FROM BASE CASE: 5.0% S REGULATED CO. ECONOMICS

TOTAL CAPITAL INVESTMENT 61187000

YEARS AFTER POWER UNIT START	ANNUAL OPERATION, KW-HR/KW	POWER UNIT HEAT REQUIREMENT, MILLION BTU/YEAR	POWER UNIT FUEL CONSUMPTION, TONS COAL/YEAR	SULFUR REMOVED BY POLLUTION CONTROL PROCESS, TONS/YEAR	BY-PRODUCT RATE, EQUIVALENT TONS/YEAR DRY SOLIDS	NET REVENUE, $/TON DRY SOLIDS	TOTAL OP. COST INCLUDING REGULATED ROI FOR POWER COMPANY, $/YEAR	TOTAL NET SALES REVENUE, $/YEAR	NET ANNUAL INCREASE (DECREASE) IN COST OF POWER, $	CUMULATIVE NET INCREASE (DECREASE) IN COST OF POWER, $
1	7000	31500000	1500000	53700	238700	0.0	23100300	0	23100300	23100300
2	7000	31500000	1500000	53700	238700	0.0	22764500	0	22764500	45864800
3	7000	31500000	1500000	53700	238700	0.0	22428700	0	22428700	68293500
4	7000	31500000	1500000	53700	238700	0.0	22092900	0	22092900	90386400
5	7000	31500000	1500000	53700	238700	0.0	21757200	0	21757200	112143600
6	7000	31500000	1500000	53700	238700	0.0	21421400	0	21421400	133565000
7	7000	31500000	1500000	53700	238700	0.0	21085600	0	21085600	154650600
8	7000	31500000	1500000	53700	238700	0.0	20749800	0	20749800	175400400
9	7000	31500000	1500000	53700	238700	0.0	20414000	0	20414000	195814400
10	7000	31500000	1500000	53700	238700	0.0	20078300	0	20078300	215892700
11	5000	22500000	1071400	38400	170500	0.0	17613100	0	17613100	233505800
12	5000	22500000	1071400	38400	170500	0.0	17277300	0	17277300	250783100
13	5000	22500000	1071400	38400	170500	0.0	16941500	0	16941500	267724600
14	5000	22500000	1071400	38400	170500	0.0	16605700	0	16605700	284330300
15	5000	22500000	1071400	38400	170500	0.0	16270000	0	16270000	300600300
16	3500	15750000	750000	26900	119400	0.0	14249900	0	14249900	314850200
17	3500	15750000	750000	26900	119400	0.0	13914100	0	13914100	328764300
18	3500	15750000	750000	26900	119400	0.0	13578300	0	13578300	342342600
19	3500	15750000	750000	26900	119400	0.0	13242600	0	13242600	355585200
20	3500	15750000	750000	26900	119400	0.0	12906800	0	12906800	368492000
21	1500	6750000	321400	11500	51200	0.0	10094400	0	10094400	378586400
22	1500	6750000	321400	11500	51200	0.0	9758600	0	9758600	388345000
23	1500	6750000	321400	11500	51200	0.0	9422800	0	9422800	397767800
24	1500	6750000	321400	11500	51200	0.0	9087100	0	9087100	406854900
25	1500	6750000	321400	11500	51200	0.0	8751300	0	8751300	415606200
26	1500	6750000	321400	11500	51200	0.0	8415500	0	8415500	424021700
27	1500	6750000	321400	11500	51200	0.0	8079700	0	8079700	432101400
28	1500	6750000	321400	11500	51200	0.0	7743900	0	7743900	439845300
29	1500	6750000	321400	11500	51200	0.0	7408200	0	7408200	447253500
30	1500	6750000	321400	11500	51200	0.0	7072400	0	7072400	454325900
TOT	127500	573750000	27321000	978500	4348500		454325900	0	454325900	
LIFETIME AVERAGE INCREASE (DECREASE) IN UNIT OPERATING COST										
			DOLLARS PER TON OF COAL BURNED				16.63	0.0	16.63	
			MILLS PER KILOWATT-HOUR				7.13	0.0	7.13	
			CENTS PER MILLION BTU HEAT INPUT				79.19	0.0	79.19	
			DOLLARS PER TON OF SULFUR REMOVED				464.31	0.0	464.31	
PROCESS COST DISCOUNTED AT 11.2% TO INITIAL YEAR, DOLLARS							165821300	0	165821300	
LEVELIZED INCREASE (DECREASE) IN UNIT OPERATING COST EQUIVALENT TO DISCOUNTED PROCESS COST OVER LIFE OF POWER UNIT										
			DOLLARS PER TON OF COAL BURNED				15.20	0.0	15.20	
			MILLS PER KILOWATT-HOUR				6.51	0.0	6.51	
			CENTS PER MILLION BTU HEAT INPUT				72.38	0.0	72.38	
			DOLLARS PER TON OF SULFUR REMOVED				424.53	0.0	424.53	

TABLE A-81. LIME SLURRY PROCESS WITH CALCINATION

SUMMARY OF ESTIMATED CAPITAL INVESTMENT

(Variation from base case: 1,000-MW existing)

	Investment, $	% of total direct investment
Direct Investment		
Materials handling (hoppers, feeders, conveyors, elevators, bins, shaker, puller, and mobile equipment)	3,843,000	8.5
Limestone calcination (feeders, crusher, ball mill, fans, bins, rotary kiln, waste heat boilers, and elevators)	5,350,000	11.9
Feed preparation (feeders, slaker, tanks, agitators, and pumps)	966,000	2.1
Gas handling (common feed plenum and booster fans, gas ducts and dampers from plenum to absorber, exhaust gas ducts and dampers from reheater and stack)	8,679,000	19.2
SO_2 absorption (four mobile-bed scrubbers including presaturator and entrainment separators, recirculation tanks, agitators, and pumps)	13,606,000	30.2
Stack gas reheat (four indirect steam reheaters)	2,026,000	4.5
Solids disposal (onsite disposal, slurry disposal pumps, and pond water return pumps)	2,262,000	5.0
Subtotal	36,732,000	81.4
Services, utilities, and miscellaneous	2,204,000	4.9
Total process areas excluding pond construction	38,936,000	86.3
Pond construction	6,203,000	13.7
Total direct investment	45,139,000	100.0
Indirect Investment		
Engineering design and supervision	1,732,000	3.8
Architect and engineering contractor	394,000	0.9
Construction expense	5,814,000	12.9
Contractor fees	1,737,000	3.8
Total indirect investment	9,677,000	21.4
Contingency	10,963,000	24.3
Total fixed investment	65,779,000	145.7
Other Capital Charges		
Allowance for startup and modifications	5,958,000	13.2
Interest during construction	7,894,000	17.5
Total depreciable investment	79,631,000	176.4
Land	1,238,000	2.7
Working capital	1,943,000	4.4
Total capital investment	82,812,000	183.5
	($83/kW)	

Basis
- Evaluation represents project beginning mid-1977, ending mid-1980. Average cost basis for scaling, mid-1979.
- Stack gas reheat to 175°F by indirect steam reheat.
- Minimum in-process storage; only pumps are spared.
- Disposal pond located 1 mile from power plant.
- Investment requirements for fly ash removal and disposal excluded; FGD process investment estimate begins with common feed plenum downstream of the ESP.
- Construction labor shortages with accompanying overtime pay incentive not considered.

TABLE A-82. LIME SLURRY PROCESS WITH CALCINATION

ANNUAL REVENUE REQUIREMENTS

(Variation from base case: 1,000-MW existing)

	Annual quantity	Unit cost, $	Total annual cost, $	% of average annual revenue requirements
Direct Costs				
Delivered raw materials				
Limestone	258,810 tons	7.00/ton	1,811,700	7.12
Coal	39,250 tons	25.00/ton	981,300	3.85
Total raw materials cost			2,793,000	10.97
Conversion costs				
Operating labor and supervision	53,270 man-hr	12.50/man-hr	665,900	2.62
Utilities				
Steam	976,700 MBtu	2.00/MBtu	1,953,400	7.67
Process water	478,400 kgal	0.12/kgal	57,400	0.22
Electricity	103,849,600 kWh	0.028/kWh	2,907,800	11.42
Heat credit	50,200 MBtu	2.00/MBtu	(100,400)	0.39
Maintenance				
Labor and material			2,911,600	11.44
Analyses	7,630 man-hr	17.00/man-hr	129,700	0.51
Total conversion costs			8,525,400	33.49
Total direct costs			11,318,400	44.46
Indirect Costs				
Capital charges				
Depreciation, interim replacements, and insurance at 6.4% of total depreciable investment			5,096,400	20.02
Average cost of capital and taxes at 8.6% of total capital investment			7,121,800	27.98
Overheads				
Plant, 50% of conversion costs less utilities			1,853,600	7.28
Administrative, 10% of operating labor			66,000	0.26
Total indirect costs			14,137,800	55.54
Total annual revenue requirements			25,456,200	100.00

	Mills/kWh	$/ton coal burned	$/MBtu heat input	$/ton S removed
Equivalent unit revenue requirements	3.64	8.49	0.40	366

Basis
- Midwest plant location, 1980 revenue requirements.
- Remaining life of power plant, 25 yr.
- Power unit on-stream time, 7,000 hr/yr.
- Coal burned, 2,999,900 tons/yr, 9,000 Btu/kWh.
- Stack gas reheat to 175°F.
- Sulfur removed, 69,490 short tons/yr; solids disposal 307,200 tons/yr calcium solids including only hydrate water.
- Investment and revenue requirement for removal and disposal of fly ash excluded.
- Total direct investment, $45,139,000; total depreciable investment, $79,631,000; and total capital investment, $82,812,000.
- All tons shown are 2,000 lb.

TABLE A-83

LIME SLURRY PROCESS WITH CALCINATION VARIATION FROM BASE CASE: 1.000 MW EXISTING REGULATED CO. ECONOMICS

TOTAL CAPITAL INVESTMENT 82812000

YEARS AFTER POWER UNIT START	ANNUAL OPERATION, KW-HR/KW	POWER UNIT HEAT REQUIREMENT, MILLION BTU/YEAR	POWER UNIT FUEL CONSUMPTION, TONS COAL/YEAR	SULFUR REMOVED BY POLLUTION CONTROL PROCESS, TONS/YEAR	BY-PRODUCT RATE, EQUIVALENT TONS/YEAR DRY SOLIDS	NET REVENUE, $/TON DRY SOLIDS	TOTAL OP. COST INCLUDING REGULATED ROI FOR POWER COMPANY, $/YEAR	TOTAL NET SALES REVENUE, $/YEAR	NET ANNUAL INCREASE (DECREASE) IN COST OF POWER, $	CUMULATIVE NET INCREASE (DECREASE) IN COST OF POWER, $
1										
2										
3										
4										
5										
6	7000	63000000	3000000	69500	307200	0.0	33112200	0	33112200	33112200
7	7000	63000000	3000000	69500	307200	0.0	32564300	0	32564300	65676500
8	7000	63000000	3000000	69500	307200	0.0	32016500	0	32016500	97693000
9	7000	63000000	3000000	69500	307200	0.0	31468600	0	31468600	129161600
10	7000	63000000	3000000	69500	307200	0.0	30920700	0	30920700	160082300
11	5000	45000000	2142900	49600	219400	0.0	27179400	0	27179400	187261700
12	5000	45000000	2142900	49600	219400	0.0	26631500	0	26631500	213893200
13	5000	45000000	2142900	49600	219400	0.0	26083700	0	26083700	239976900
14	5000	45000000	2142900	49600	219400	0.0	25535800	0	25535800	265512700
15	5000	45000000	2142900	49600	219400	0.0	24988000	0	24988000	290500700
16	3500	31500000	1500000	34700	153600	0.0	21932500	0	21932500	312433200
17	3500	31500000	1500000	34700	153600	0.0	21384700	0	21384700	333817900
18	3500	31500000	1500000	34700	153600	0.0	20836800	0	20836800	354654700
19	3500	31500000	1500000	34700	153600	0.0	20289000	0	20289000	374943700
20	3500	31500000	1500000	34700	153600	0.0	19741100	0	19741100	394684800
21	1500	13500000	642900	14900	65800	0.0	15554600	0	15554600	410239400
22	1500	13500000	642900	14900	65800	0.0	15006800	0	15006800	425246200
23	1500	13500000	642900	14900	65800	0.0	14458900	0	14458900	439705100
24	1500	13500000	642900	14900	65800	0.0	13911100	0	13911100	453616200
25	1500	13500000	642900	14900	65800	0.0	13363200	0	13363200	466979400
26	1500	13500000	642900	14900	65800	0.0	12815400	0	12815400	479794800
27	1500	13500000	642900	14900	65800	0.0	12267500	0	12267500	492062300
28	1500	13500000	642900	14900	65800	0.0	11719700	0	11719700	503782000
29	1500	13500000	642900	14900	65800	0.0	11171800	0	11171800	514953800
30	1500	13500000	642900	14900	65800	0.0	10624000	0	10624000	525577800
TOT	92500	832500000	39643500	918000	4059000		525577800	0	525577800	

LIFETIME AVERAGE INCREASE (DECREASE) IN UNIT OPERATING COST

DOLLARS PER TON OF COAL BURNED	13.26	0.0	13.26
MILLS PER KILOWATT-HOUR	5.68	0.0	5.68
CENTS PER MILLION BTU HEAT INPUT	63.13	0.0	63.13
DOLLARS PER TON OF SULFUR REMOVED	572.52	0.0	572.52
PROCESS COST DISCOUNTED AT 11.2% TO INITIAL YEAR, DOLLARS	217588900	0	217588900

LEVELIZED INCREASE (DECREASE) IN UNIT OPERATING COST EQUIVALENT TO DISCOUNTED PROCESS COST OVER LIFE OF POWER UNIT

DOLLARS PER TON OF COAL BURNED	11.87	0.0	11.87
MILLS PER KILOWATT-HOUR	5.09	0.0	5.09
CENTS PER MILLION BTU HEAT INPUT	56.50	0.0	56.50
DOLLARS PER TON OF SULFUR REMOVED	512.34	0.0	512.34

TABLE A-84. LIME SLURRY PROCESS WITH CALCINATION

SUMMARY OF ESTIMATED CAPITAL INVESTMENT

(Variation from base case: 1,000 MW)

	Investment, $	% of total direct investment
Direct Investment		
Materials handling (hoppers, feeders, conveyors, elevators, bins, shaker, puller, and mobile equipment)	3,768,000	8.7
Limestone calcination (feeders, crusher, ball mill, fans, bins, rotary kiln, waste heat boilers, and elevators)	5,251,000	12.2
Feed preparation (feeders, slaker, tanks, agitators, and pumps)	948,000	2.2
Gas handling (common feed plenum and booster fans, gas ducts and dampers from plenum to absorber, exhaust gas ducts and dampers from reheater and stack)	7,125,000	16.5
SO_2 absorption (four mobile-bed scrubbers including presaturator and entrainment separators, recirculation tanks, agitators, and pumps)	12,501,000	28.9
Stack gas reheat (four indirect steam reheaters)	1,872,000	4.3
Solids disposal (onsite disposal, slurry disposal pumps, and pond water return pumps)	2,052,000	4.7
Subtotal	33,517,000	77.6
Services, utilities, and miscellaneous	2,011,000	4.7
Total process areas excluding pond construction	35,528,000	82.2
Pond construction	7,678,000	17.8
Total direct investment	43,206,000	100.0
Indirect Investment		
Engineering design and supervision	1,772,000	4.1
Architect and engineering contractor	398,000	0.9
Construction expense	5,547,000	12.8
Contractor fees	1,680,000	3.9
Total indirect investment	9,397,000	21.7
Contingency	10,521,000	24.4
Total fixed investment	63,124,000	146.1
Other Capital Charges		
Allowance for startup and modifications	5,545,000	12.9
Interest during construction	7,575,000	17.5
Total depreciable investment	76,244,000	176.5
Land	1,558,000	3.6
Working capital	1,865,000	4.3
Total capital investment	79,667,000	184.4
	($80/kW)	

Basis
Evaluation represents project beginning mid-1977, ending mid-1980. Average cost basis for scaling, mid-1979.
Stack gas reheat to 175°F by indirect steam reheat.
Minimum in-process storage; only pumps are spared.
Disposal pond located 1 mile from power plant.
Investment requirements for fly ash removal and disposal excluded; FGD process investment estimate begins with common feed plenum downstream of the ESP.
Construction labor shortages with accompanying overtime pay incentive not considered.

TABLE A-85. LIME SLURRY PROCESS WITH CALCINATION

ANNUAL REVENUE REQUIREMENTS

(Variation from base case: 1,000 MW)

	Annual quantity	Unit cost, $	Total annual cost, $	% of average annual revenue requirements
Direct Costs				
Delivered raw materials				
Limestone	250,200 tons	7.00/ton	1,751,400	7.26
Coal	37,900 tons	25.00/ton	947,500	3.93
Total raw materials cost			2,698,900	11.19
Conversion costs				
Operating labor and supervision	53,270 man-hr	12.50/man-hr	665,900	2.76
Utilities				
Steam	944,200 MBtu	2.00/MBtu	1,888,400	7.83
Process water	517,600 kgal	0.12/kgal	62,100	0.26
Electricity	100,406,200 kWh	0.028/kWh	2,811,400	11.65
Heat credit	48,500 MBtu	2.00/MBtu	(97,000)	(0.40)
Maintenance				
Labor and material			2,717,300	11.26
Analyses	7,630 man-hr	17.00/man-hr	129,700	0.54
Total conversion costs			8,177,800	33.90
Total direct costs			10,876,700	45.09
Indirect Costs				
Capital charges				
Depreciation, interim replacements, and insurance at 6.0% of total depreciable investment			4,574,600	18.96
Average cost of capital and taxes at 8.6% of total capital investment			6,851,400	28.40
Overheads				
Plant, 50% of conversion costs less utilities			1,756,500	7.28
Administrative, 10% of operating labor			66,600	0.27
Total indirect costs			13,249,100	54.91
Total annual revenue requirements			24,125,800	100.00

	Mills/kWh	$/ton coal burned	$/MBtu heat input	$/ton S removed
Equivalent unit revenue requirements	3.45	8.32	0.40	363

Basis
- Midwest plant location, 1980 revenue requirements.
- Remaining life of power plant, 30 yr.
- Power unit on-stream time, 7,000 hr/yr.
- Coal burned, 2,900,100 tons/yr, 8,700 Btu/kWh.
- Stack gas reheat to 175°F.
- Sulfur removed, 66,540 short tons/yr; solids disposal 297,000 tons/yr calcium solids including only hydrate water.
- Investment and revenue requirement for removal and disposal of fly ash excluded.
- Total direct investment, $43,206,000; total depreciable investment, $76,244,000; and total capital investment, $79,667,000.
- All tons shown are 2,000 lb.

TABLE A-86

LIME SLURRY PROCESS WITH CALCINATION VARIATION FROM BASE CASE: 1.000 MW REGULATED CO. ECONOMICS

TOTAL CAPITAL INVESTMENT 79667000

YEARS AFTER POWER UNIT START	ANNUAL OPERATION, KW-HR/KW	POWER UNIT HEAT REQUIREMENT, MILLION BTU/YEAR	POWER UNIT FUEL CONSUMPTION, TONS COAL/YEAR	SULFUR REMOVED BY POLLUTION CONTROL PROCESS, TONS/YEAR	BY-PRODUCT RATE, EQUIVALENT TONS/YEAR DRY SOLIDS	NET REVENUE, $/TON DRY SOLIDS	TOTAL OP. COST INCLUDING REGULATED ROI FOR POWER COMPANY, $/YEAR	TOTAL NET SALES REVENUE, $/YEAR	NET ANNUAL INCREASE (DECREASE) IN COST OF POWER, $	CUMULATIVE NET INCREASE (DECREASE) IN COST OF POWER, $
1	7000	60900000	2900000	66500	297000	0.0	30979700	0	30979700	30979700
2	7000	60900000	2900000	66500	297000	0.0	30542600	0	30542600	61522300
3	7000	60900000	2900000	66500	297000	0.0	30105400	0	30105400	91627700
4	7000	60900000	2900000	66500	297000	0.0	29668300	0	29668300	121296000
5	7000	60900000	2900000	66500	297000	0.0	29231200	0	29231200	150527200
6	7000	60900000	2900000	66500	297000	0.0	28794000	0	28794000	179321200
7	7000	60900000	2900000	66500	297000	0.0	28356900	0	28356900	207678100
8	7000	60900000	2900000	66500	297000	0.0	27919800	0	27919800	235597900
9	7000	60900000	2900000	66500	297000	0.0	27482600	0	27482600	263080500
10	7000	60900000	2900000	66500	297000	0.0	27045500	0	27045500	290126000
11	5000	43500000	2071400	47500	212100	0.0	23538900	0	23538900	313664900
12	5000	43500000	2071400	47500	212100	0.0	23101800	0	23101800	336766700
13	5000	43500000	2071400	47500	212100	0.0	22664700	0	22664700	359431400
14	5000	43500000	2071400	47500	212100	0.0	22227500	0	22227500	381658900
15	5000	43500000	2071400	47500	212100	0.0	21790400	0	21790400	403449300
16	3500	30450000	1450000	33300	148500	0.0	18944600	0	18944600	422393900
17	3500	30450000	1450000	33300	148500	0.0	18507400	0	18507400	440901300
18	3500	30450000	1450000	33300	148500	0.0	18070300	0	18070300	458971600
19	3500	30450000	1450000	33300	148500	0.0	17633100	0	17633100	476604700
20	3500	30450000	1450000	33300	148500	0.0	17196000	0	17196000	493800700
21	1500	13050000	621400	14300	63600	0.0	13267400	0	13267400	507068100
22	1500	13050000	621400	14300	63600	0.0	12830200	0	12830200	519898300
23	1500	13050000	621400	14300	63600	0.0	12393100	0	12393100	532291400
24	1500	13050000	621400	14300	63600	0.0	11956000	0	11956000	544247400
25	1500	13050000	621400	14300	63600	0.0	11518800	0	11518800	555766200
26	1500	13050000	621400	14300	63600	0.0	11081700	0	11081700	566847900
27	1500	13050000	621400	14300	63600	0.0	10644500	0	10644500	577492400
28	1500	13050000	621400	14300	63600	0.0	10207400	0	10207400	587699800
29	1500	13050000	621400	14300	63600	0.0	9770300	0	9770300	597470100
30	1500	13050000	621400	14300	63600	0.0	9333100	0	9333100	606803200
TOT 127500	1109250000	52821000	1212000	5409000			606803200	0	606803200	

LIFETIME AVERAGE INCREASE (DECREASE) IN UNIT OPERATING COST

DOLLARS PER TON OF COAL BURNED	11.49	0.0	11.49
MILLS PER KILOWATT-HOUR	4.76	0.0	4.76
CENTS PER MILLION BTU HEAT INPUT	54.70	0.0	54.70
DOLLARS PER TON OF SULFUR REMOVED	500.66	0.0	500.66
PROCESS COST DISCOUNTED AT 11.2% TO INITIAL YEAR, DOLLARS	222326600	0	222326600

LEVELIZED INCREASE (DECREASE) IN UNIT OPERATING COST EQUIVALENT TO DISCOUNTED PROCESS COST OVER LIFE OF POWER UNIT

DOLLARS PER TON OF COAL BURNED	10.54	0.0	10.54
MILLS PER KILOWATT-HOUR	4.37	0.0	4.37
CENTS PER MILLION BTU HEAT INPUT	50.20	0.0	50.20
DOLLARS PER TON OF SULFUR REMOVED	459.64	0.0	459.64

TABLE A-87. LIME SLURRY PROCESS WITH CALCINATION

SUMMARY OF ESTIMATED CAPITAL INVESTMENT

(Variation from base case: 90% SO_2 removal)

	Investment, $	% of total direct investment
Direct Investment		
Materials handling (hoppers, feeders, conveyors, elevators, bins, shaker, puller, and mobile equipment)	2,773,000	9.4
Limestone calcination (feeders, crusher, ball mill, fans, bins, rotary kiln, waste heat boilers, and elevators)	3,925,000	13.3
Feed preparation (feeders, slaker, tanks, agitators, and pumps)	709,000	2.4
Gas handling (common feed plenum and booster fans, gas ducts and dampers from plenum to absorber, exhaust gas ducts and dampers from reheater and stack)	4,318,000	14.6
SO_2 absorption (four mobile-bed scrubbers including presaturator and entrainment separators, recirculation tanks, agitators, and pumps)	8,504,000	28.6
Stack gas reheat (four indirect steam reheaters)	1,282,000	4.3
Solids disposal (onsite disposal, slurry disposal pumps, and pond water return pumps)	1,713,000	5.8
Subtotal	24,617,000	78.4
Services, utilities, and miscellaneous	1,393,000	4.7
Total process areas excluding pond construction	29,617,000	83.1
Pond construction	5,001,000	16.9
Total direct investment	29,618,000	100.0
Indirect Investment		
Engineering design and supervision	1,698,000	5.7
Architect and engineering contractor	391,000	1.3
Construction expense	4,064,000	13.7
Contractor fees	1,261,000	4.3
Total indirect investment	7,414,000	25.0
Contingency	7,406,000	25.0
Total fixed investment	44,438,000	150.0
Other Capital Charges		
Allowance for startup and modifications	3,944,000	13.3
Interest during construction	5,333,000	18.1
Total depreciable investment	53,715,000	181.4
Land	1,009,000	3.4
Working capital	1,186,000	4.0
Total capital investment	55,910,000	188.8
	($112/kW)	

Basis
Evaluation represents project beginning mid-1977, ending mid-1980. Average cost basis for scaling, mid-1979.
Stack gas reheat to 175°F by indirect steam reheat.
Minimum in-process storage; only pumps are spared.
Disposal pond located 1 mile from power plant.
Investment requirements for fly ash removal and disposal excluded; FGD process investment estimate begins with common feed plenum downstream of the ESP.
Construction labor shortages with accompanying overtime pay incentive not considered.

TABLE A-88. LIME SLURRY PROCESS WITH CALCINATION

ANNUAL REVENUE REQUIREMENTS

(Variation from base case: 90% removal)

	Annual quantity	Unit cost, $	Total annual cost, $	% of average annual revenue requirements
Direct Costs				
Delivered raw materials				
Limestone	147,420 tons	7.00/ton	1,031,900	6.38
Coal	22,360 tons	25.00/ton	559,000	3.46
Total raw materials cost			1,590,900	9.84
Conversion costs				
Operating labor and supervision	37,670 man-hr	12.50/man-hr	470,900	2.91
Utilities				
Steam	488,400 MBtu	2.00/MBtu	976,800	6.04
Process water	247,800 kgal	0.12/kgal	29,700	0.18
Electricity	53,035,000 kWh	0.029/kWh	1,538,000	9.53
Heat credit	28,600 MBtu	2.00/MBtu	(57,200)	(0.35)
Maintenance				
Labor and material			2,119,400	13.12
Analyses	4,700 man-hr	17.00/man-hr	79,900	0.49
Total conversion costs			5,157,500	31.91
Total direct costs			6,748,400	41.76
Indirect Costs				
Capital charges				
Depreciation, interim replacements, and insurance at 6.0% of total depreciable investment			3,222,900	19.94
Average cost of capital and taxes at 8.6% of total capital investment			4,808,300	29.75
Overheads				
Plant, 50% of conversion costs less utilities			1,335,100	8.26
Administrative, 10% of operating labor			47,100	0.29
Total indirect costs			9,413,400	58.24
Total annual revenue requirements			16,161,800	100.00

	Mills/kWh	$/ton coal burned	$/MBtu heat input	$/ton S removed
Equivalent unit revenue requirements	4.62	10.78	0.51	406

Basis
- Midwest plant location, 1980 revenue requirements.
- Remaining life of power plant, 30 yr.
- Power unit on-stream time, 7,000 hr/yr.
- Coal burned, 1,500,100 tons/yr, 9,000 Btu/kWh.
- Stack gas reheat to 175°F.
- Sulfur removed, 39,800 short tons/yr; solids disposal 177,800 tons/yr calcium solids including only hydrate water.
- Investment and revenue requirement for removal and disposal of fly ash excluded.
- Total direct investment, $29,618,000; total depreciable investment, $53,715,000; and total capital investment, $55,910,000.
- All tons shown are 2,000 lb.

TABLE A-89

LIME SLURRY PROCESS WITH CALCINATION VARIATION FROM BASE CASE: 90% REMOVAL REGULATED CO. ECONOMICS

TOTAL CAPITAL INVESTMENT 55910000

YEARS AFTER POWER UNIT START	ANNUAL OPERATION, KW-HR/KW	POWER UNIT HEAT REQUIREMENT, MILLION BTU/YEAR	POWER UNIT FUEL CONSUMPTION, TONS COAL/YEAR	SULFUR REMOVED BY POLLUTION CONTROL PROCESS, TONS/YEAR	BY-PRODUCT RATE, EQUIVALENT TONS/YEAR DRY SOLIDS	NET REVENUE, $/TON DRY SOLIDS	TOTAL OP. COST INCLUDING REGULATED ROI FOR POWER COMPANY, $/YEAR	TOTAL NET SALES REVENUE, $/YEAR	NET ANNUAL INCREASE (DECREASE) IN COST OF POWER, $	CUMULATIVE NET INCREASE (DECREASE) IN COST OF POWER, $
1	7000	31500000	1500000	39800	177800	0.0	20971800	0	20971800	20971800
2	7000	31500000	1500000	39800	177800	0.0	20663900	0	20663900	41635700
3	7000	31500000	1500000	39800	177800	0.0	20355900	0	20355900	61991600
4	7000	31500000	1500000	39800	177800	0.0	20047900	0	20047900	82039500
5	7000	31500000	1500000	39800	177800	0.0	19740000	0	19740000	101779500
6	7000	31500000	1500000	39800	177800	0.0	19432000	0	19432000	121211500
7	7000	31500000	1500000	39800	177800	0.0	19124000	0	19124000	140335500
8	7000	31500000	1500000	39800	177800	0.0	18816100	0	18816100	159151600
9	7000	31500000	1500000	39800	177800	0.0	18508100	0	18508100	177659700
10	7000	31500000	1500000	39800	177800	0.0	18200100	0	18200100	195859800
11	5000	22500000	1071400	28400	127000	0.0	15994900	0	15994900	211854700
12	5000	22500000	1071400	28400	127000	0.0	15686900	0	15686900	227541600
13	5000	22500000	1071400	28400	127000	0.0	15378900	0	15378900	242920500
14	5000	22500000	1071400	28400	127000	0.0	15071000	0	15071000	257991500
15	5000	22500000	1071400	28400	127000	0.0	14763000	0	14763000	272754500
16	3500	15750000	750000	19900	88900	0.0	12951200	0	12951200	285705700
17	3500	15750000	750000	19900	88900	0.0	12643300	0	12643300	298349000
18	3500	15750000	750000	19900	88900	0.0	12335300	0	12335300	310684300
19	3500	15750000	750000	19900	88900	0.0	12027300	0	12027300	322711600
20	3500	15750000	750000	19900	88900	0.0	11719400	0	11719400	334431000
21	1500	6750000	321400	8500	38100	0.0	9191800	0	9191800	343622800
22	1500	6750000	321400	8500	38100	0.0	8883800	0	8883800	352506600
23	1500	6750000	321400	8500	38100	0.0	8575900	0	8575900	361082500
24	1500	6750000	321400	8500	38100	0.0	8267900	0	8267900	369350400
25	1500	6750000	321400	8500	38100	0.0	7959900	0	7959900	377310300
26	1500	6750000	321400	8500	38100	0.0	7652000	0	7652000	384962300
27	1500	6750000	321400	8500	38100	0.0	7344000	0	7344000	392306300
28	1500	6750000	321400	8500	38100	0.0	7036000	0	7036000	399342300
29	1500	6750000	321400	8500	38100	0.0	6728100	0	6728100	406070400
30	1500	6750000	321400	8500	38100	0.0	6420100	0	6420100	412490500
TOT	127500	57375000	27321000	724500	3238500		412490500	0	412490500	

LIFETIME AVERAGE INCREASE (DECREASE) IN UNIT OPERATING COST

DOLLARS PER TON OF COAL BURNED	15.10	0.0	15.10
MILLS PER KILOWATT-HOUR	6.47	0.0	6.47
CENTS PER MILLION BTU HEAT INPUT	71.89	0.0	71.89
DOLLARS PER TON OF SULFUR REMOVED	569.35	0.0	569.35

PROCESS COST DISCOUNTED AT 11.2% TO INITIAL YEAR, DOLLARS 150492800 0 150492800

LEVELIZED INCREASE (DECREASE) IN UNIT OPERATING COST EQUIVALENT TO DISCOUNTED PROCESS COST OVER LIFE OF POWER UNIT

DOLLARS PER TON OF COAL BURNED	13.80	0.0	13.80
MILLS PER KILOWATT-HOUR	5.91	0.0	5.91
CENTS PER MILLION BTU HEAT INPUT	65.69	0.0	65.69
DOLLARS PER TON OF SULFUR REMOVED	520.02	0.0	520.02

TABLE A-90. LIME SLURRY PROCESS WITH CALCINATION

SUMMARY OF ESTIMATED CAPITAL INVESTMENT

(Variation from base case: oil-fired, existing)

	Investment, $	% of total direct investment
Direct Investment		
Materials handling (hoppers, feeders, conveyors, elevators, bins, shaker, puller, and mobile equipment)	1,599,000	7.2
Limestone calcination (feeders, crusher, ball mill, fans, bins, rotary kiln, dust collectors, waste heat boiler, and elevators)	2,100,000	9.4
Feed preparation (feeders, slakers, dust collector, tanks, agitators, and pumps)	420,000	1.9
Gas handling (common feed plenum and booster fans, gas ducts and dampers from plenum to absorber, exhaust gas ducts and dampers from reheater and stack)	4,448,000	20.0
SO_2 absorption (four mobile-bed scrubbers including presaturator and entrainment separators, recirculation tanks, agitators, and pumps)	7,994,000	35.9
Stack gas reheat (four direct oil reheaters)	731,000	3.3
Solids disposal (onsite disposal, slurry disposal pumps, and pond water return pumps)	1,357,000	6.1
Subtotal	18,649,000	83.8
Services, utilities, and miscellaneous	1,119,000	5.0
Total process areas excluding pond construction	19,768,000	88.8
Pond construction	2,482,000	11.2
Total direct investment	22,250,000	100.0
Indirect Investment		
Engineering design and supervision	1,326,000	6.0
Architect and engineering contractor	311,000	1.4
Construction expense	3,252,000	14.6
Contractor fees	1,014,000	4.5
Total indirect investment	5,903,000	26.5
Contingency	5,631,000	25.3
Total fixed investment	33,784,000	151.8
Other Capital Charges		
Allowance for startup and modifications	3,130,000	14.1
Interest during construction	4,054,000	18.2
Total depreciable investment	40,968,000	184.1
Land	497,000	2.2
Working capital	926,000	4.2
Total capital investment	42,391,000	190.5
	($85/kW)	

Basis
Evaluation represents project beginning mid-1977, ending mid-1980. Average cost basis for scaling, mid-1979.
Stack gas reheat to 175°F by indirect steam reheat.
Minimum in-process storage; only pumps are spared.
Disposal pond located 1 mile from power plant.
Investment requirements for fly ash removal and disposal excluded; FGD process investment estimate begins with common feed plenum downstream of the ESP.

TABLE A-91. LIME SLURRY PROCESS WITH CALCINATION

ANNUAL REVENUE REQUIREMENTS

(Variation from base case: oil-fired, existing)

	Annual quantity	Unit cost, $	Total annual cost, $	% of average annual revenue requirements
Direct Costs				
Delivered raw materials				
Limestone	57,040 tons	7.00/ton	399,300	3.12
Fuel oil	1,048,600 gal	0.40/gal	419,400	3.28
Total raw materials cost			818,700	6.40
Conversion costs				
Operating labor and supervision	36,040 man-hr	12.50/man-hr	450,500	3.52
Utilities				
Oil	2,872,900 gal	0.40/gal	1,149,200	8.98
Process water	176,600 kgal	0.12/kgal	21,200	0.17
Electricity	41,962,100 kWh	0.029/kWh	1,216,900	9.51
Maintenance				
Labor and material			1,655,900	12.94
Analyses	4,500 man-hr	17.00/man-hr	76,500	0.60
Total conversion costs			4,570,200	35.72
Total direct costs			5,388,900	42.12
Indirect Costs				
Capital charges				
Depreciation, interim replacements, and insurance at 6.4% of total depreciable investment			2,622,000	20.50
Average cost of capital and taxes at 8.6% of total capital investment			3,645,600	28.50
Overheads				
Plant, 50% of conversion costs less utilities			1,091,500	8.53
Administrative, 10% of operating labor			45,100	0.35
Total indirect costs			7,404,200	57.88
Total average annual revenue requirements			12,793,100	100.00

	Mills/kWh	$/bbl oil burned	$/MBtu heat input	$/ton S removed
Equivalent unit revenue requirements	3.66	2.39	0.40	860

Basis
- Midwest plant location, 1980 revenue requirements.
- Remaining life of power plant, 25 yr.
- Power unit on-stream time, 7,000 hr/yr.
- Oil burned, 5,350,000 bbl/yr, 9,200 Btu/kWh.
- Stack gas reheat to 175°F.
- Sulfur removed, 14,880 short tons/yr; solids disposal 65,570 tons/yr calcium solids including only hydrate water.
- Investment and revenue requirement for removal and disposal of fly ash excluded.
- Total direct investment, $22,250,000; total depreciable investment, $40,968,000; and total capital investment, $42,391,000.
- All tons shown are 2,000 lb.

TABLE A-92

LIME SLURRY PROCESS WITH CALCINATION VARIATION FROM BASE CASE: OIL-FIRED, EXISTING REGULATED CO. ECONOMICS

TOTAL CAPITAL INVESTMENT 42391000

YEARS AFTER POWER UNIT START	ANNUAL OPERATION, KW-HR/KW	POWER UNIT HEAT REQUIREMENT, MILLION BTU/YEAR	POWER UNIT FUEL CONSUMPTION, BARRELS OIL/YEAR	SULFUR REMOVED BY POLLUTION CONTROL PROCESS, TONS/YEAR	BY-PRODUCT RATE, EQUIVALENT TONS/YEAR DRY SOLIDS	NET REVENUE, $/TON DRY SOLIDS	TOTAL OP. COST INCLUDING REGULATED ROI FOR POWER COMPANY, $/YEAR	TOTAL NET SALES REVENUE, $/YEAR	NET ANNUAL INCREASE (DECREASE) IN COST OF POWER, $	CUMULATIVE NET INCREASE (DECREASE) IN COST OF POWER, $
1										
2										
3										
4										
5										
6	7000	32200000	5324100	14800	459000	0.0	16711500	0	16711500	16711500
7	7000	32200000	5324100	14800	459000	0.0	16429600	0	16429600	33141100
8	7000	32200000	5324100	14800	459000	0.0	16147700	0	16147700	49288800
9	7000	32200000	5324100	14800	459000	0.0	15865900	0	15865900	65154700
10	7000	32200000	5324100	14800	459000	0.0	15584000	0	15584000	80738700
11	5000	23000000	3802900	10600	327900	0.0	13787500	0	13787500	94526200
12	5000	23000000	3802900	10600	327900	0.0	13505600	0	13505600	108031800
13	5000	23000000	3802900	10600	327900	0.0	13223800	0	13223800	121255600
14	5000	23000000	3802900	10600	327900	0.0	12941900	0	12941900	134197500
15	5000	23000000	3802900	10600	327900	0.0	12660000	0	12660000	146857500
16	3500	16100000	2662000	7400	229500	0.0	11176800	0	11176800	158034100
17	3500	16100000	2662000	7400	229500	0.0	10894700	0	10894700	168928800
18	3500	16100000	2662000	7400	229500	0.0	10612900	0	10612900	179541700
19	3500	16100000	2662000	7400	229500	0.0	10331000	0	10331000	189872700
20	3500	16100000	2662000	7400	229500	0.0	10049200	0	10049200	199921900
21	1500	6900000	1140900	3200	98400	0.0	7989400	0	7989400	207911300
22	1500	6900000	1140900	3200	98400	0.0	7707500	0	7707500	215618800
23	1500	6900000	1140900	3200	98400	0.0	7425700	0	7425700	223044500
24	1500	6900000	1140900	3200	98400	0.0	7143800	0	7143800	230188300
25	1500	6900000	1140900	3200	98400	0.0	6862000	0	6862000	237050300
26	1500	6900000	1140900	3200	98400	0.0	6580100	0	6580100	243630400
27	1500	6900000	1140900	3200	98400	0.0	6298300	0	6298300	249928700
28	1500	6900000	1140900	3200	98400	0.0	6016400	0	6016400	255945100
29	1500	6900000	1140900	3200	98400	0.0	5734600	0	5734600	261679700
30	1500	6900000	1140900	3200	98400	0.0	5452700	0	5452700	267132400
TOT	92500	425500000	70354000	196000	6066000		267132400	0	267132400	
LIFETIME AVERAGE INCREASE (DECREASE) IN UNIT OPERATING COST										
DOLLARS PER BARREL OF OIL BURNED							3.80	0.0	3.80	
MILLS PER KILOWATT-HOUR							5.78	0.0	5.78	
CENTS PER MILLION BTU HEAT INPUT							62.78	0.0	62.78	
DOLLARS PER TON OF SULFUR REMOVED							1362.92	0.0	1362.92	
PROCESS COST DISCOUNTED AT 11.2% TO INITIAL YEAR, DOLLARS							110177900	0	110177900	
LEVELIZED INCREASE (DECREASE) IN UNIT OPERATING COST EQUIVALENT TO DISCOUNTED PROCESS COST OVER LIFE OF POWER UNIT										
DOLLARS PER BARREL OF OIL BURNED							3.39	0.0	3.39	
MILLS PER KILOWATT-HOUR							5.15	0.0	5.15	
CENTS PER MILLION BTU HEAT INPUT							55.98	0.0	55.98	
DOLLARS PER TON OF SULFUR REMOVED							1216.09	0.0	1216.09	

TABLE A-93. MAGNESIA PROCESS

SUMMARY OF ESTIMATED CAPITAL INVESTMENT

(Variation from base case: 200-MW existing)

	Investment, $	% of total direct investment
Direct Investment		
Materials handling (conveyors, silos, bins, and feeders)	406,000	2.2
Feed preparation (mixer, tank, agitator, and pumps)	187,000	1.0
Gas handling (common feed plenum and booster fans, gas ducts and dampers from plenum to absorber, exhaust gas ducts and dampers from absorber to reheater and stack)	2,063,000	11.4
SO_2 absorption (two spray grid towers, including entrainment separators, tanks, agitators, and pumps)	2,380,000	13.1
Stack gas reheat (two indirect steam reheaters)	531,000	2.9
Chloride purge (two chloride scrubbers and entrainment separators, tanks, agitators, and pumps)	2,229,000	12.3
Slurry processing (centrifuge, conveyor, tank, agitator, and pumps)	623,000	3.4
Drying (dryer, conveyors, silos, fans, tanks, and pumps)	3,587,000	19.7
Calcining (calciner, cooler, bin, fans, conveyors, and silos)	1,216,000	6.7
Acid production (complete contact unit for sulfuric acid production)	3,282,000	18.1
Acid storage (storage and shipping facilities for 30-day production of sulfuric acid)	582,000	3.2
Subtotal	17,086,000	94.0
Services, utilities, and miscellaneous	1,025,000	5.6
Total process areas excluding pond construction	18,111,000	99.6
Incremental ash pond cost	65,000	0.4
Total direct investment	18,176,000	100.0
Indirect Investment		
Engineering design and supervision	1,313,000	7.2
Architect and engineering contractor	326,000	1.8
Construction expense	2,781,000	15.3
Contractor fees	870,000	4.8
Total indirect investment	5,290,000	29.1
Contingency	4,693,000	25.8
Total fixed investment	28,159,000	154.9
Other Capital Charges		
Allowance for startup and modifications	2,810,000	15.5
Interest during construction	3,379,000	18.6
Total depreciable investment	34,348,000	189.0
Land	15,000	0.1
Working capital	756,000	4.1
Total capital investment	35,119,000	193.2
	($176/kW)	

Basis
Evaluation represents project beginning mid-1977, ending mid-1980. Average cost basis for scaling, mid-1979.
Stack gas reheat to 175°F by indirect steam reheat.
Minimum in-process storage; only pumps are spared.
Investment requirements for fly ash removal and disposal excluded; FGD process investment estimate begins with common feed plenum downstream of the ESP.
Construction labor shortages with accompanying overtime pay incentive not considered.

TABLE A-94. MAGNESIA PROCESS

ANNUAL REVENUE REQUIREMENTS

(Variation from base case: 200-MW existing)

	Annual quantity	Unit cost, $	Total annual cost, $	% of average annual revenue requirements
Direct Costs				
Delivered raw materials				
MgO	620 tons	300.00/ton	186,000	1.90
Catalyst	760 liters	2.50/liter	1,900	0.02
Agricultural limestone	1,370 tons	15.00/ton	20,600	0.21
Total raw materials cost			208,500	2.13
Conversion costs				
Operating labor and supervision	30,000 man-hr	12.50/man-hr	375,000	3.82
Utilities				
Fuel oil	2,654,000 gal	0.40/gal	1,061,600	10.82
Steam	212,600 MBtu	2.00/MBtu	425,200	4.34
Process water	996,100 kgal	0.12/kgal	119,500	1.22
Electricity	26,419,000 kWh	0.031/kWh	819,000	8.35
Heat credit	57,300 MBtu	2.00/MBtu	(114,600)	(1.17)
Maintenance				
Labor and material			1,450,800	14.79
Analyses	4,480 man-hr	17.00/man-hr	76,200	0.78
Total conversion costs			4,212,700	42.95
Total direct costs			4,421,200	45.08
Indirect Costs				
Capital charges				
Depreciation, interim replacements, and insurance at 7.0% of total depreciable investment			2,404,400	24.51
Average cost of capital and taxes at 8.6% of total capital investment			3,020,200	30.79
Overheads				
Plant, 50% of conversion costs less utilities			951,000	9.70
Administrative, 10% of operating labor			37,500	0.38
Marketing, 10% of byproduct sales revenue			114,000	1.16
Total indirect costs			6,527,100	66.54
Gross average annual revenue requirements			10,948,300	111.62
Byproduct Sales Revenue				
100% sulfuric acid	45,600 tons	25.00/ton	(1,140,000)	(11.62)
Net annual revenue requirements			9,808,300	100.00

	Mills/kWh	$/ton coal burned	$/MBtu heat input	$/ton sulfur removed
Equivalent unit revenue requirements	7.01	15.48	0.74	669

Basis
- Midwest plant location, 1980 revenue requirements.
- Remaining life of power plant, 20 yr.
- Power unit on-stream time, 7,000 hr/yr.
- Coal burned, 633,500 tons/yr, 9,500 Btu/kWh.
- Stack gas reheat to 175°F.
- Sulfur removed, 14,670 short tons/yr.
- Investment and revenue requirement for removal and disposal of fly ash excluded.
- Total direct investment, $18,176,000; total depreciable investment, $34,348,000; and total capital investment, $35,119,000.
- All tons shown are 2,000 lb.

TABLE A-95

MAGNESIA PROCESS VARIATION FROM BASE CASE: 200 MW EXISTING REGULATED CO. ECONOMICS

TOTAL CAPITAL INVESTMENT 35119000

YEARS AFTER POWER UNIT START	ANNUAL OPERATION, KW-HR/KW	POWER UNIT HEAT REQUIREMENT, MILLION BTU/YEAR	POWER UNIT FUEL CONSUMPTION, TONS COAL/YEAR	SULFUR REMOVED BY POLLUTION CONTROL PROCESS, TONS/YEAR	BY-PRODUCT RATE, EQUIVALENT TONS/YEAR 100% SULFURIC ACID	NET REVENUE, $/TON 100% SULFURIC ACID	TOTAL OP. COST INCLUDING REGULATED ROI FOR POWER COMPANY, $/YEAR	TOTAL NET SALES REVENUE, $/YEAR	NET ANNUAL INCREASE (DECREASE) IN COST OF POWER, $	CUMULATIVE NET INCREASE (DECREASE) IN COST OF POWER, $
1										
2										
3										
4										
5										
6										
7										
8										
9										
10										
11	5000	9500000	452400	10500	32600	22.50	13184000	733500	12450500	12450500
12	5000	9500000	452400	10500	32600	22.50	12888600	733500	12155100	24605600
13	5000	9500000	452400	10500	32600	22.50	12593200	733500	11859700	36465300
14	5000	9500000	452400	10500	32600	22.50	12297800	733500	11564300	48029600
15	5000	9500000	452400	10500	32600	22.50	12002400	733500	11268900	59298500
16	3500	6650000	316700	7300	22800	22.50	10717400	513000	10204400	69502900
17	3500	6650000	316700	7300	22800	22.50	10422000	513000	9909000	79411900
18	3500	6650000	316700	7300	22800	22.50	10126600	513000	9613600	89025500
19	3500	6650000	316700	7300	22800	22.50	9831200	513000	9318200	98343700
20	3500	6650000	316700	7300	22800	22.50	9535800	513000	9022800	107366500
21	1500	2850000	135700	3100	9800	22.50	7769000	220500	7548500	114915000
22	1500	2850000	135700	3100	9800	22.50	7473600	220500	7253100	122168100
23	1500	2850000	135700	3100	9800	22.50	7178300	220500	6957800	129125900
24	1500	2850000	135700	3100	9800	22.50	6882900	220500	6662400	135788300
25	1500	2850000	135700	3100	9800	22.50	6587500	220500	6367000	142155300
26	1500	2850000	135700	3100	9800	22.50	6292100	220500	6071600	148226900
27	1500	2850000	135700	3100	9800	22.50	5996700	220500	5776200	154003100
28	1500	2850000	135700	3100	9800	22.50	5701300	220500	5480800	159483900
29	1500	2850000	135700	3100	9800	22.50	5405900	220500	5185400	164669300
30	1500	2850000	135700	3100	9800	22.50	5110500	220500	4890000	169559300
TOT	57500	109250000	5202500	120000	375000		177996800	8437500	169559300	
LIFETIME AVERAGE INCREASE (DECREASE) IN UNIT OPERATING COST										
DOLLARS PER TON OF COAL BURNED							34.21	1.62	32.59	
MILLS PER KILOWATT-HOUR							15.48	0.74	14.74	
CENTS PER MILLION BTU HEAT INPUT							162.93	7.73	155.20	
DOLLARS PER TON OF SULFUR REMOVED							1483.31	70.32	1412.99	
PROCESS COST DISCOUNTED AT 11.2% TO INITIAL YEAR, DOLLARS							82098300	4252300	77846000	
LEVELIZED INCREASE (DECREASE) IN UNIT OPERATING COST EQUIVALENT TO DISCOUNTED PROCESS COST OVER LIFE OF POWER UNIT										
DOLLARS PER TON OF COAL BURNED							31.30	1.62	29.68	
MILLS PER KILOWATT-HOUR							14.16	0.73	13.43	
CENTS PER MILLION BTU HEAT INPUT							149.07	7.72	141.35	
DOLLARS PER TON OF SULFUR REMOVED							1352.53	70.06	1282.47	

TABLE A-96. MAGNESIA PROCESS

SUMMARY OF ESTIMATED CAPITAL INVESTMENT

(Variation from base case: 200 MW)

	Investment, $	% of total direct investment
Direct Investment		
Materials handling (conveyors, silos, bins, and feeders)	397,000	2.3
Feed preparation (mixer, tank, agitator, and pumps)	184,000	1.1
Gas handling (common feed plenum and booster fans, gas ducts and dampers from plenum to absorber, exhaust gas ducts and dampers from absorber to reheater and stack)	2,017,000	11.3
SO_2 absorption (two spray grid towers, including entrainment separators, tanks, agitators, and pumps)	2,326,000	13.1
Stack gas reheat (two indirect steam reheaters)	519,000	2.9
Chloride purge (two chloride scrubbers and entrainment separators, tanks, agitators, and pumps)	2,178,000	12.2
Slurry processing (centrifuge, conveyor, tank, agitator, and pumps)	609,000	3.4
Drying (dryer, conveyors, silos, fans, tanks, and pumps)	3,526,000	19.8
Calcining (calciner, cooler, bin, fans, conveyors, and silos)	1,189,000	6.7
Acid production (complete contact unit for sulfuric acid production)	3,210,000	18.0
Acid storage (storage and shipping facilities for 30-day production of sulfuric acid)	571,000	3.2
Subtotal	16,726,000	94.0
Services, utilities, and miscellaneous	1,004,000	5.6
Total process areas excluding pond construction	17,730,000	99.6
Incremental ash pond cost	63,000	0.4
Total direct investment	17,793,000	100.0
Indirect Investment		
Engineering design and supervision	1,308,000	7.4
Architect and engineering contractor	325,000	1.8
Construction expense	2,731,000	15.3
Contractor fees	856,000	4.8
Total indirect investment	5,220,000	29.3
Contingency	4,603,000	25.9
Total fixed investment	27,616,000	155.2
Other Capital Charges		
Allowance for startup and modifications	2,756,000	15.5
Interest during construction	3,314,000	18.6
Total depreciable investment	33,686,000	189.3
Land	15,000	0.1
Working capital	738,000	4.1
Total capital investment	34,439,000	193.5
	($172/kW)	

Basis
Evaluation represents project beginning mid-1977, ending mid-1980. Average cost basis for scaling, mid-1979.
Stack gas reheat to 175°F by indirect steam reheat.
Minimum in-process storage; only pumps are spared.
Investment requirements for fly ash removal and disposal excluded; FGD process investment estimate begins with common feed plenum downstream of the ESP.
Construction labor shortages with accompanying overtime pay incentive not considered.

TABLE A-97. MAGNESIA PROCESS

ANNUAL REVENUE REQUIREMENTS

(Variation from base case: 200 MW)

	Annual quantity	Unit cost, $	Total annual cost, $	% of average annual revenue requirements
Direct Costs				
Delivered raw materials				
MgO	600 tons	300.00/ton	180,000	1.94
Catalyst	727 liters	2.50/liter	1,800	0.02
Agricultural limestone	1,330 tons	15.00/ton	20,000	0.22
Total raw materials cost			201,800	2.18
Conversion costs				
Operating labor and supervision	30,000 man-hr	12.50/man-hr	375,000	4.04
Utilities				
Fuel oil	2,570,000 gal	0.40/gal	1,028,000	11.09
Steam	205,900 MBtu	2.00/MBtu	411,800	4.44
Process water	964,700 kgal	0.12/kgal	115,800	1.25
Electricity	25,605,000 kWh	0.031/kWh	793,800	8.56
Heat credit	55,400 MBtu	2.00/MBtu	(110,800)	(1.19)
Maintenance				
Labor and material			1,420,200	15.31
Analyses	4,480 man-hr	17.00/man-hr	76,200	0.82
Total conversion costs			4,110,000	44.32
Total direct costs			4,311,800	46.50
Indirect Costs				
Capital charges				
Depreciation, interim replacements, and insurance at 6.0% of total depreciable investment			2,021,200	21.80
Average cost of capital and taxes at 8.6% of total capital investment			2,961,800	31.94
Overheads				
Plant, 50% of conversion costs less utilities			935,700	10.09
Administrative, 10% of operating labor			37,500	0.40
Marketing, 10% of byproduct sales revenue			110,500	1.19
Total indirect costs			6,066,700	65.42
Gross average annual revenue requirements			10,378,500	111.92
Byproduct Sales Revenue				
100% sulfuric acid	44,200 tons	25.00/ton	(1,105,000)	(11.92)
Net annual revenue requirements			9,273,500	100.00

	Mills/kWh	$/ton coal burned	$/MBtu heat input	$/ton sulfur removed
Equivalent unit revenue requirements	6.62	15.12	0.72	653

Basis
- Midwest plant location, 1980 revenue requirements.
- Remaining life of power plant, 30 yr.
- Power unit on-stream time, 7,000 hr/yr.
- Coal burned, 613,200 tons/yr, 9,200 Btu/kWh.
- Stack gas reheat to 175°F.
- Sulfur removed, 14,210 short tons/yr.
- Investment and revenue requirement for removal and disposal of fly ash excluded.
- Total direct investment, $17,793,000; total depreciable investment, $33,686,000; and total capital investment, $34,439,000.
- All tons shown are 2,000 lb.

TABLE A-98

MAGNESIA PROCESS VARIATION FROM BASE CASE: 200 MW REGULATED CO. ECONOMICS

TOTAL CAPITAL INVESTMENT 34439000

YEARS AFTER POWER UNIT START	ANNUAL OPERATION, KW-HR/KW	POWER UNIT HEAT REQUIREMENT, MILLION BTU/YEAR	POWER UNIT FUEL CONSUMPTION, TONS COAL/YEAR	SULFUR REMOVED BY POLLUTION CONTROL PROCESS, TONS/YEAR	BY-PRODUCT RATE, EQUIVALENT TONS/YEAR 100% SULFURIC ACID	NET REVENUE, $/TON 100% SULFURIC ACID	TOTAL OP. COST INCLUDING REGULATED ROI FOR POWER COMPANY, $/YEAR	TOTAL NET SALES REVENUE, $/YEAR	NET ANNUAL INCREASE (DECREASE) IN COST OF POWER, $	CUMULATIVE NET INCREASE (DECREASE) IN COST OF POWER, $
1	7000	12880000	613300	14200	44200	22.50	13230000	994500	12235500	12235500
2	7000	12880000	613300	14200	44200	22.50	13036900	994500	12042400	24277900
3	7000	12880000	613300	14200	44200	22.50	12843700	994500	11849200	36127100
4	7000	12880000	613300	14200	44200	22.50	12650600	994500	11656100	47783200
5	7000	12880000	613300	14200	44200	22.50	12457500	994500	11463000	59246200
6	7000	12880000	613300	14200	44200	22.50	12264300	994500	11269800	70516000
7	7000	12880000	613300	14200	44200	22.50	12071200	994500	11076700	81592700
8	7000	12880000	613300	14200	44200	22.50	11878000	994500	10883500	92476200
9	7000	12880000	613300	14200	44200	22.50	11684900	994500	10690400	103166600
10	7000	12880000	613300	14200	44200	22.50	11491800	994500	10497300	113663900
11	5000	9200000	438100	10200	31600	22.50	10086200	711000	9375200	123039100
12	5000	9200000	438100	10200	31600	22.50	9893100	711000	9182100	132221200
13	5000	9200000	438100	10200	31600	22.50	9699900	711000	8988900	141210100
14	5000	9200000	438100	10200	31600	22.50	9506800	711000	8795800	150005900
15	5000	9200000	438100	10200	31600	22.50	9313700	711000	8602700	158608600
16	3500	6440000	306700	7100	22100	22.50	8154900	497300	7657600	166266200
17	3500	6440000	306700	7100	22100	22.50	7961800	497300	7464500	173730700
18	3500	6440000	306700	7100	22100	22.50	7768600	497300	7271300	181002000
19	3500	6440000	306700	7100	22100	22.50	7575500	497300	7078200	188080200
20	3500	6440000	306700	7100	22100	22.50	7382400	497300	6885100	194965300
21	1500	2760000	131400	3000	9500	22.50	5752700	213800	5538900	200504200
22	1500	2760000	131400	3000	9500	22.50	5559600	213800	5345800	205850000
23	1500	2760000	131400	3000	9500	22.50	5366500	213800	5152700	211002700
24	1500	2760000	131400	3000	9500	22.50	5173300	213800	4959500	215962200
25	1500	2760000	131400	3000	9500	22.50	4980200	213800	4766400	220728600
26	1500	2760000	131400	3000	9500	22.50	4787000	213800	4573200	225301800
27	1500	2760000	131400	3000	9500	22.50	4593900	213800	4380100	229681900
28	1500	2760000	131400	3000	9500	22.50	4400800	213800	4187000	233868900
29	1500	2760000	131400	3000	9500	22.50	4207600	213800	3993800	237862700
30	1500	2760000	131400	3000	9500	22.50	4014500	213800	3800700	241663400
TOT 127500		234600000	11171000	258500	805500		259787900	18124500	241663400	
LIFETIME AVERAGE INCREASE (DECREASE) IN UNIT OPERATING COST										
DOLLARS PER TON OF COAL BURNED							23.26	1.63	21.63	
MILLS PER KILOWATT-HOUR							10.19	0.71	9.48	
CENTS PER MILLION BTU HEAT INPUT							110.74	7.73	103.01	
DOLLARS PER TON OF SULFUR REMOVED							1004.98	70.11	934.87	
PROCESS COST DISCOUNTED AT 11.2% TO INITIAL YEAR, DOLLARS							94920400	7233800	87686600	
LEVELIZED INCREASE (DECREASE) IN UNIT OPERATING COST EQUIVALENT TO DISCOUNTED PROCESS COST OVER LIFE OF POWER UNIT										
DOLLARS PER TON OF COAL BURNED							21.28	1.62	19.66	
MILLS PER KILOWATT-HOUR							9.32	0.71	8.61	
CENTS PER MILLION BTU HEAT INPUT							101.33	7.72	93.61	
DOLLARS PER TON OF SULFUR REMOVED							918.88	70.03	848.85	

TABLE A-99. MAGNESIA PROCESS

SUMMARY OF ESTIMATED CAPITAL INVESTMENT

(Variation from base case: 500-MW existing)

	Investment, $	% of total direct investment
Direct Investment		
Materials handling (conveyors, silos, bins, and feeders)	714,000	2.0
Feed preparation (mixer, tank, agitator, and pumps)	307,000	0.9
Gas handling (common feed plenum and booster fans, gas ducts and dampers from plenum to absorber, exhaust gas ducts and dampers from absorber to reheater and stack)	4,694,000	13.1
SO_2 absorption (four spray grid towers, including entrainment separators, tanks, agitators, and pumps)	5,540,000	15.4
Stack gas reheat (four indirect steam reheaters)	1,217,000	3.4
Chloride purge (four chloride scrubbers and entrainment separators, tanks, agitators, and pumps)	5,152,000	14.4
Slurry processing (centrifuge, conveyor, tank, agitator, and pumps)	1,127,000	3.1
Drying (dryer, conveyors, silos, fans, tanks, and pumps)	5,579,000	15.5
Calcining (calciner, cooler, bin, fans, conveyors, and silos)	2,279,000	6.4
Acid production (complete contact unit for sulfuric acid production)	6,090,000	17.0
Acid storage (storage and shipping facilities for 30-day production of sulfuric acid)	1,008,000	2.8
Subtotal	33,707,000	94.0
Services, utilities, and miscellaneous	2,022,000	5.6
Total process areas excluding pond construction	35,729,000	99.6
Incremental ash pond cost	157,000	0.4
Total direct investment	35,886,000	100.0
Indirect Investment		
Engineering design and supervision	1,888,000	5.3
Architect and engineering contractor	469,000	1.3
Construction expense	4,891,000	13.6
Contractor fees	1,459,000	4.1
Total indirect investment	8,707,000	24.3
Contingency	8,918,000	24.8
Total fixed investment	53,511,000	149.1
Other Capital Charges		
Allowance for startup and modifications	5,336,000	14.9
Interest during construction	6,421,000	17.9
Total depreciable investment	65,268,000	181.9
Land	39,000	0.1
Working capital	1,530,000	4.2
Total capital investment	66,837,000	186.2
	($134/kW)	

Basis
- Evaluation represents project beginning mid-1977, ending mid-1980. Average cost basis for scaling, mid-1979.
- Stack gas reheat to 175°F by indirect steam reheat.
- Minimum in-process storage; only pumps are spared.
- Investment requirements for fly ash removal and disposal excluded; FGD process investment estimate begins with common feed plenum downstream of the ESP.
- Construction labor shortages with accompanying overtime pay incentive not considered.

TABLE A-100. MAGNESIA PROCESS

ANNUAL REVENUE REQUIREMENTS

(Variation from base case: 500-MW existing)

	Annual quantity	Unit cost, $	Total annual cost, $	% of average annual revenue requirements
Direct Costs				
Delivered raw materials				
MgO	1,500 tons	300.00/ton	450,000	2.46
Catalyst	1,800 liters	2.50/liter	4,500	0.02
Agricultural limestone	3,310 tons	15.00/ton	49,700	0.27
Total raw materials cost			504,200	2.75
Conversion costs				
Operating labor and supervision	47,500 man-hr	12.50/man-hr	593,800	3.24
Utilities				
Fuel oil	6,426,000 gal	0.40/gal	2,570,400	14.04
Steam	514,600 MBtu	2.00/MBtu	1,029,200	5.62
Process water	2,411,600 kgal	0.12/kgal	289,400	1.58
Electricity	63,110,000 kWh	0.029/kWh	1,830,200	9.99
Heat credit	138,600 MBtu	2.00/MBtu	(277,200)	(1.51)
Maintenance				
Labor and material			2,505,700	13.68
Analyses	8,500 man-hr	17.00/man-hr	144,500	0.79
Total conversion costs			8,686,000	47.43
Total direct costs			9,190,200	50.18
Indirect Costs				
Capital charges				
Depreciation, interim replacements, and insurance at 6.4% of total depreciable investment			4,177,200	22.81
Average cost of capital and taxes at 8.6% of total capital investment			5,748,000	31.39
Overheads				
Plant, 50% of conversion costs less utilities			1,622,000	8.86
Administrative, 10% of operating labor			59,400	0.32
Marketing, 10% of byproduct sales revenue			276,000	1.51
Total indirect costs			11,882,600	64.89
Gross average annual revenue requirements			21,072,800	115.07
Byproduct Sales Revenue				
100% sulfuric acid	110,400 tons	25.00/ton	(2,760,000)	(15.07)
Net annual revenue requirements			18,312,800	100.00

	Mills/kWh	$/ton coal burned	$/MBtu heat input	$/ton sulfur removed
Equivalent unit revenue requirements	5.23	11.94	0.57	515

Basis
- Midwest plant location, 1980 revenue requirements.
- Remaining life of power plant, 25 yr.
- Power unit on-stream time, 7,000 hr/yr.
- Coal burned, 1,533,350 tons/yr, 9,200 Btu/kWh.
- Stack gas reheat to 175°F.
- Sulfur removed, 35,530 short tons/yr.
- Investment and revenue requirement for removal and disposal of fly ash excluded.
- Total direct investment, $35,886,000; total depreciable investment, $65,268,000; and total capital investment, $66,837,000.
- All tons shown are 2,000 lb.

TABLE A-101

MAGNESIA PROCESS VARIATION FROM BASE CASE: 500 MW EXISTING REGULATED CO. ECONOMICS

TOTAL CAPITAL INVESTMENT 66837000

YEARS AFTER POWER UNIT START	ANNUAL OPERATION, KW-HR/KW	POWER UNIT HEAT REQUIREMENT, MILLION BTU/YEAR	POWER UNIT FUEL CONSUMPTION, TONS COAL/YEAR	SULFUR REMOVED BY POLLUTION CONTROL PROCESS, TONS/YEAR	BY-PRODUCT RATE, EQUIVALENT TONS/YEAR 100% SULFURIC ACID	NET REVENUE, $/TON 100% SULFURIC ACID	TOTAL OP. COST INCLUDING REGULATED ROI FOR POWER COMPANY, $/YEAR	TOTAL NET SALES REVENUE, $/YEAR	NET ANNUAL INCREASE (DECREASE) IN COST OF POWER, $	CUMULATIVE NET INCREASE (DECREASE) IN COST OF POWER, $
1										
2										
3										
4										
5										
6	7000	32200000	1533300	35500	110400	22.50	26980100	2484000	24496100	24496100
7	7000	32200000	1533300	35500	110400	22.50	26531000	2484000	24047000	48543100
8	7000	32200000	1533300	35500	110400	22.50	26082000	2484000	23598000	72141100
9	7000	32200000	1533300	35500	110400	22.50	25632900	2484000	23148900	95290000
10	7000	32200000	1533300	35500	110400	22.50	25183900	2484000	22699900	117989900
11	5000	23000000	1095200	25400	78900	22.50	22139800	1775300	20364500	138354400
12	5000	23000000	1095200	25400	78900	22.50	21690700	1775300	19915400	158269800
13	5000	23000000	1095200	25400	78900	22.50	21241700	1775300	19466400	177736200
14	5000	23000000	1095200	25400	78900	22.50	20792600	1775300	19017300	196753500
15	5000	23000000	1095200	25400	78900	22.50	20343600	1775300	18568300	215321800
16	3500	16100000	766700	17800	55200	22.50	17851200	1242000	16609200	231931000
17	3500	16100000	766700	17800	55200	22.50	17402100	1242000	16160100	248091100
18	3500	16100000	766700	17800	55200	22.50	16953100	1242000	15711100	263802200
19	3500	16100000	766700	17800	55200	22.50	16504000	1242000	15262000	279064200
20	3500	16100000	766700	17800	55200	22.50	16055000	1242000	14813000	293877200
21	1500	6900000	328600	7600	23700	22.50	12624800	533300	12091500	305968700
22	1500	6900000	328600	7600	23700	22.50	12175700	533300	11642400	317611100
23	1500	6900000	328600	7600	23700	22.50	11726700	533300	11193400	328804500
24	1500	6900000	328600	7600	23700	22.50	11277600	533300	10744300	339548800
25	1500	6900000	328600	7600	23700	22.50	10828600	533300	10295300	349844100
26	1500	6900000	328600	7600	23700	22.50	10379600	533300	9846300	359690400
27	1500	6900000	328600	7600	23700	22.50	9930500	533300	9397200	369087600
28	1500	6900000	328600	7600	23700	22.50	9481500	533300	8948200	378035800
29	1500	6900000	328600	7600	23700	22.50	9032400	533300	8499100	386534900
30	1500	6900000	328600	7600	23700	22.50	8583400	533300	8050100	394585000
TOT	92500	425500000	20262000	469500	1459500		427424500	32839500	394585000	
LIFETIME AVERAGE INCREASE (DECREASE) IN UNIT OPERATING COST										
DOLLARS PER TON OF COAL BURNED							21.09	1.62	19.47	
MILLS PER KILOWATT-HOUR							9.24	0.71	8.53	
CENTS PER MILLION BTU HEAT INPUT							100.45	7.72	92.73	
DOLLARS PER TON OF SULFUR REMOVED							910.38	69.94	840.44	
PROCESS COST DISCOUNTED AT 11.2% TO INITIAL YEAR, DOLLARS							177151100	15187600	161963500	
LEVELIZED INCREASE (DECREASE) IN UNIT OPERATING COST EQUIVALENT TO DISCOUNTED PROCESS COST OVER LIFE OF POWER UNIT										
DOLLARS PER TON OF COAL BURNED							18.90	1.62	17.28	
MILLS PER KILOWATT-HOUR							8.28	0.71	7.57	
CENTS PER MILLION BTU HEAT INPUT							90.00	7.72	82.28	
DOLLARS PER TON OF SULFUR REMOVED							815.99	69.96	746.03	

TABLE A-102. MAGNESIA PROCESS

SUMMARY OF ESTIMATED CAPITAL INVESTMENT

(Variation from base case: 2.0% sulfur)

	Investment, $	% of total direct investment
Direct Investment		
Materials handling (conveyors, silos, bins, and feeders)	428,000	1.5
Feed preparation (mixer, tank, agitator, and pumps)	196,000	0.7
Gas handling (common feed plenum and booster fans, gas ducts and dampers from plenum to absorber, exhaust gas ducts and dampers from absorber to reheater and stack)	4,625,000	16.2
SO_2 absorption (four spray grid towers, including entrainment separators, tanks, agitators, and pumps)	5,447,000	19.1
Stack gas reheat (four indirect steam reheaters)	1,198,000	4.3
Chloride purge (four chloride scrubbers and entrainment separators, tanks, agitators, and pumps)	5,066,000	17.8
Slurry processing (centrifuge, conveyor, tank, agitator, and pumps)	659,000	2.3
Drying (dryer, conveyors, silos, fans, tanks, and pumps)	3,741,000	13.1
Calcining (calciner, cooler, bin, fans, conveyors, and silos)	1,292,000	4.5
Acid production (complete contact unit for sulfuric acid production)	3,486,000	12.2
Acid storage (storage and shipping facilities for 30-day production of sulfuric acid)	614,000	2.2
Subtotal	26,752,000	93.8
Services, utilities, and miscellaneous	1,605,000	5.6
Total process areas excluding pond construction	28,357,000	99.5
Incremental ash pond cost	154,000	0.5
Total direct investment	28,511,000	100.0
Indirect Investment		
Engineering design and supervision	1,705,000	6.0
Architect and engineering contractor	423,000	1.5
Construction expense	4,042,000	14.2
Contractor fees	1,225,000	4.3
Total indirect investment	7,395,000	26.0
Contingency	7,181,000	25.2
Total fixed investment	43,087,000	151.2
Other Capital Charges		
Allowance for startup and modifications	4,293,000	15.1
Interest during construction	5,171,000	18.1
Total depreciable investment	52,551,000	184.4
Land	42,000	0.1
Working capital	1,110,000	3.9
Total capital investment	53,703,000	188.4
	($107/kW)	

Basis
Evaluation represents project beginning mid-1977, ending mid-1980. Average cost basis for scaling, mid-1979.
Stack gas reheat to 175°F by indirect steam reheat.
Minimum in-process storage; only pumps are spared.
Investment requirements for fly ash removal and disposal excluded; FGD process investment estimate begins with common feed plenum downstream of the ESP.
Construction labor shortages with accompanying overtime pay incentive not considered.

TABLE A-103. MAGNESIA PROCESS

ANNUAL REVENUE REQUIREMENTS

(Variation from base case: 2.0% sulfur)

	Annual quantity	Unit cost, $	Total annual cost, $	% of average annual revenue requirements
Direct Costs				
Delivered raw materials				
MgO	680 tons	300.00/ton	204,000	1.39
Catalyst	816 liters	2.50/liter	2,000	0.01
Agricultural limestone	3,240 tons	15.00/ton	48,600	0.34
Total raw materials cost			254,600	1.74
Conversion costs				
Operating labor and supervision	42,600 man-hr	12.50/man-hr	532,500	3.63
Utilities				
Fuel oil	2,892,000 gal	0.40/gal	1,156,800	7.89
Steam	503,400 MBtu	2.00/MBtu	1,006,800	6.87
Process water	1,321,900 kgal	0.12/kgal	158,600	1.08
Electricity	52,658,000 kWh	0.029/kWh	1,527,100	10.41
Heat credit	62,400 MBtu	2.00/MBtu	(124,800)	(0.85)
Maintenance				
Labor and material			1,989,600	13.57
Analyses	7,620 man-hr	17.00/man-hr	129,500	0.88
Total conversion costs			6,376,100	43.48
Total direct costs			6,630,700	45.22
Indirect Costs				
Capital charges				
Depreciation, interim replacements, and insurance at 6.0% of total depreciable investment			3,153,100	21.50
Average cost of capital and taxes at 8.6% of total capital investment			4,618,500	31.50
Overheads				
Plant, 50% of conversion costs less utilities			1,325,800	9.04
Administrative, 10% of operating labor			53,300	0.36
Marketing, 10% of byproduct sales revenue			124,300	0.85
Total indirect costs			9,275,000	63.25
Gross average annual revenue requirements			15,905,700	108.47
Byproduct Sales Revenue				
100% sulfuric acid	49,700 tons	25.00/ton	(1,242,500)	(8.47)
Net annual revenue requirements			14,663,200	100.00

	Mills/kWh	$/ton coal burned	$/MBtu heat input	$/ton sulfur removed
Equivalent unit revenue requirements	4.19	9.77	0.47	914

Basis
- Midwest plant location, 1980 revenue requirements.
- Remaining life of power plant, 30 yr.
- Power unit on-stream time, 7,000 hr/yr.
- Coal burned, 1,500,100 tons/yr, 9,000 Btu/kWh.
- Stack gas reheat to 175°F.
- Sulfur removed, 16,050 short tons/yr.
- Investment and revenue requirement for removal and disposal of fly ash excluded.
- Total direct investment, $28,511,000; total depreciable investment, $52,551,000; and total capital investment, $53,703,000.
- All tons shown are 2,000 lb.

TABLE A-104

MAGNESIA PROCESS VARIATION FROM BASE CASE: 2.0% S REGULATED CO. ECONOMICS

TOTAL CAPITAL INVESTMENT 53703000

YEARS AFTER POWER UNIT START	ANNUAL OPERATION, KW-HR/KW	POWER UNIT HEAT REQUIREMENT, MILLION BTU/YEAR	POWER UNIT FUEL CONSUMPTION, TONS COAL/YEAR	SULFUR REMOVED BY POLLUTION CONTROL PROCESS, TONS/YEAR	BY-PRODUCT RATE, EQUIVALENT TONS/YEAR 100% SULFURIC ACID	NET REVENUE, $/TON 100% SULFURIC ACID	TOTAL OP. COST INCLUDING REGULATED ROI FOR POWER COMPANY, $/YEAR	TOTAL NET SALES REVENUE, $/YEAR	NET ANNUAL INCREASE (DECREASE) IN COST OF POWER, $	CUMULATIVE NET INCREASE (DECREASE) IN COST OF POWER, $
1	7000	31500000	1500000	16100	49700	22.50	20399900	1118300	19281600	19281600
2	7000	31500000	1500000	16100	49700	22.50	20098600	1118300	18980300	38261900
3	7000	31500000	1500000	16100	49700	22.50	19797300	1118300	18679000	56940900
4	7000	31500000	1500000	16100	49700	22.50	19496000	1118300	18377700	75318600
5	7000	31500000	1500000	16100	49700	22.50	19194700	1118300	18076400	93395000
6	7000	31500000	1500000	16100	49700	22.50	18893500	1118300	17775200	111170200
7	7000	31500000	1500000	16100	49700	22.50	18592200	1118300	17473900	128644100
8	7000	31500000	1500000	16100	49700	22.50	18290900	1118300	17172600	145816700
9	7000	31500000	1500000	16100	49700	22.50	17989600	1118300	16871300	162688000
10	7000	31500000	1500000	16100	49700	22.50	17688300	1118300	16570000	179258000
11	5000	22500000	1071400	11500	35500	22.50	15517100	798800	14718300	193976300
12	5000	22500000	1071400	11500	35500	22.50	15215800	798800	14417000	208393300
13	5000	22500000	1071400	11500	35500	22.50	14914500	798800	14115700	222509000
14	5000	22500000	1071400	11500	35500	22.50	14613200	798800	13814400	236323400
15	5000	22500000	1071400	11500	35500	22.50	14311900	798800	13513100	249836500
16	3500	15750000	750000	8000	24900	22.50	12528900	560300	11968600	261805100
17	3500	15750000	750000	8000	24900	22.50	12227600	560300	11667300	273472400
18	3500	15750000	750000	8000	24900	22.50	11926300	560300	11366000	284838400
19	3500	15750000	750000	8000	24900	22.50	11625100	560300	11064800	295903200
20	3500	15750000	750000	8000	24900	22.50	11323800	560300	10763500	306666700
21	1500	6750000	321400	3400	10700	22.50	8837300	240800	8596500	315263200
22	1500	6750000	321400	3400	10700	22.50	8536000	240800	8295200	323558400
23	1500	6750000	321400	3400	10700	22.50	8234700	240800	7993900	331552300
24	1500	6750000	321400	3400	10700	22.50	7933400	240800	7692600	339244900
25	1500	6750000	321400	3400	10700	22.50	7632100	240800	7391300	346636200
26	1500	6750000	321400	3400	10700	22.50	7330800	240800	7090000	353726200
27	1500	6750000	321400	3400	10700	22.50	7029500	240800	6788700	360514900
28	1500	6750000	321400	3400	10700	22.50	6728200	240800	6487400	367002300
29	1500	6750000	321400	3400	10700	22.50	6426900	240800	6186100	373188400
30	1500	6750000	321400	3400	10700	22.50	6125600	240800	5884800	379073200
TOT 127500		573750000	27321000	292500	906000		399459700	20386500	379073200	
LIFETIME AVERAGE INCREASE (DECREASE) IN UNIT OPERATING COST										
DOLLARS PER TON OF COAL BURNED							14.62	0.75	13.87	
MILLS PER KILOWATT-HOUR							6.27	0.32	5.95	
CENTS PER MILLION BTU HEAT INPUT							69.62	3.55	66.07	
DOLLARS PER TON OF SULFUR REMOVED							1365.67	69.69	1295.98	
PROCESS COST DISCOUNTED AT 11.2% TO INITIAL YEAR, DOLLARS							146164200	8134600	138029600	
LEVELIZED INCREASE (DECREASE) IN UNIT OPERATING COST EQUIVALENT TO DISCOUNTED PROCESS COST OVER LIFE OF POWER UNIT										
DOLLARS PER TON OF COAL BURNED							13.40	0.75	12.65	
MILLS PER KILOWATT-HOUR							5.74	0.32	5.42	
CENTS PER MILLION BTU HEAT INPUT							63.80	3.55	60.25	
DOLLARS PER TON OF SULFUR REMOVED							1249.27	69.53	1179.74	

TABLE A-105. MAGNESIA PROCESS

SUMMARY OF ESTIMATED CAPITAL INVESTMENT

(Base case: 500 MW, 3.5% sulfur)

	Investment, $	% of total direct investment
Direct Investment		
Materials handling (conveyors, silos, bins, and feeders)	704,000	2.0
Feed preparation (mixer, tank, agitator, and pumps)	303,000	0.9
Gas handling (common feed plenum and booster fans, gas ducts and dampers from plenum to absorber, exhaust gas ducts and dampers from absorber to reheater and stack)	4,625,000	13.1
SO_2 absorption (four spray grid towers, including entrainment separators, tanks, agitators, and pumps)	5,447,000	15.4
Stack gas reheat (four indirect steam reheaters)	1,198,000	3.4
Chloride purge (four chloride scrubbers and entrainment separators, tanks, agitators, and pumps)	5,066,000	14.3
Slurry processing (centrifuge, conveyor, tank, agitator, and pumps)	1,110,000	3.1
Drying (dryer, conveyors, silos, fans, tanks, and pumps)	5,518,000	15.7
Calcining (calciner, cooler, bin, fans, conveyors, and silos)	2,243,000	6.3
Acid production (complete contact unit for sulfuric acid production)	6,000,000	17.0
Acid storage (storage and shipping facilities for 30-day production of sulfuric acid)	994,000	2.8
Subtotal	33,208,000	94.0
Services, utilities, and miscellaneous	1,992,000	5.6
Total process areas excluding pond construction	35,200,000	99.6
Incremental ash pond cost	154,000	0.4
Total direct investment	35,354,000	100.0
Indirect Investment		
Engineering design and supervision	1,881,000	5.3
Architect and engineering contractor	467,000	1.3
Construction expense	4,831,000	13.7
Contractor fees	1,442,000	4.1
Total indirect investment	8,621,000	24.4
Contingency	8,795,000	24.9
Total fixed investment	52,770,000	149.3
Other Capital Charges		
Allowance for startup and modifications	5,262,000	14.9
Interest during construction	6,333,000	17.9
Total depreciable investment	64,365,000	182.1
Land	42,000	0.1
Working capital	1,504,000	4.2
Total capital investment	65,911,000	186.4
	($132/kW)	

Basis
- Evaluation represents project beginning mid-1977, ending mid-1980. Average cost basis for scaling, mid-1979.
- Stack gas reheat to 175°F by indirect steam reheat.
- Minimum in-process storage; only pumps are spared.
- Investment requirements for fly ash removal and disposal excluded; FGD process investment estimate begins with common feed plenum downstream of the ESP.
- Construction labor shortages with accompanying overtime pay incentive not considered.

TABLE A-106. MAGNESIA PROCESS

ANNUAL REVENUE REQUIREMENTS

(Base case: 500 MW, 3.5% sulfur)

	Annual quantity	Unit cost, $	Total annual cost, $	% of average annual revenue requirements
Direct Costs				
Delivered raw materials				
MgO	1,470 tons	300.00/ton	441,000	2.48
Catalyst	1,800 liters	2.50/liter	4,500	0.03
Agricultural limestone	3,240 tons	15.00/ton	48,600	0.27
Total raw materials cost			494,100	2.78
Conversion costs				
Operating labor and supervision	47,500 man-hr	12.50/man-hr	593,800	3.34
Utilities				
Fuel oil	6,286,000 gal	0.40/gal	2,514,300	14.13
Steam	503,400 MBtu	2.00/MBtu	1,006,800	5.66
Process water	2,359,200 kgal	0.12/kgal	283,100	1.59
Electricity	61,752,000 kWh	0.029/kWh	1,790,800	10.07
Heat credit	135,600 MBtu	2.00/MBtu	(271,200)	(1.52)
Maintenance				
Labor and material			2,468,600	13.88
Analyses	8,500 man-hr	17.00/man-hr	144,500	0.81
Total conversion costs			8,530,700	47.96
Total direct costs			9,024,800	50.74
Indirect Costs				
Capital charges				
Depreciation, interim replacements, and insurance at 6.0% of total depreciable investment			3,861,900	21.71
Average cost of capital and taxes at 8.6% of total capital investment			5,668,300	31.87
Overheads				
Plant, 50% of conversion costs less utilities			1,603,500	9.01
Administrative, 10% of operating labor			59,400	0.33
Marketing, 10% of byproduct sales revenue			270,000	1.52
Total indirect costs			11,463,100	64.44
Gross average annual revenue requirements			20,487,900	115.18
Byproduct Sales Revenue				
100% sulfuric acid	108,000 tons	25.00/ton	(2,700,000)	(15.18)
Net annual revenue requirements			17,787,900	100.00

	Mills/kWh	$/ton coal burned	$/MBtu heat input	$/ton sulfur removed
Equivalent unit revenue requirements	5.08	11.86	0.56	512

Basis
- Midwest plant location, 1980 revenue requirements.
- Remaining life of power plant, 30 yr.
- Power unit on-stream time, 7,000 hr/yr.
- Coal burned, 1,500,100 tons/yr, 9,000 Btu/kWh.
- Stack gas reheat to 175°F.
- Sulfur removed, 34,750 short tons/yr.
- Investment and revenue requirement for removal and disposal of fly ash excluded.
- Total direct investment, $35,354,000; total depreciable investment, $64,365,000; and total capital investment, $65,911,000.
- All tons shown are 2,000 lb.

TABLE A-107

MAGNESIA PROCESS BASE CASE: 500 MW, 3.5% S REGULATED CO. ECONOMICS

TOTAL CAPITAL INVESTMENT 65911000

YEARS AFTER POWER UNIT START	ANNUAL OPERATION, KW-HR/KW	POWER UNIT HEAT REQUIREMENT, MILLION BTU/YEAR	POWER UNIT FUEL CONSUMPTION, TONS COAL/YEAR	SULFUR REMOVED BY POLLUTION CONTROL PROCESS, TONS/YEAR	BY-PRODUCT RATE, EQUIVALENT TONS/YEAR 100% SULFURIC ACID	NET REVENUE, $/TON 100% SULFURIC ACID	TOTAL OP. COST INCLUDING REGULATED ROI FOR POWER COMPANY, $/YEAR	TOTAL NET SALES REVENUE, $/YEAR	NET ANNUAL INCREASE (DECREASE) IN COST OF POWER, $	CUMULATIVE NET INCREASE (DECREASE) IN COST OF POWER, $
1	7000	31500000	1500000	34800	108000	22.50	25886600	2430000	23456600	23456600
2	7000	31500000	1500000	34800	108000	22.50	25517600	2430000	23087600	46544200
3	7000	31500000	1500000	34800	108000	22.50	25148500	2430000	22718500	69262700
4	7000	31500000	1500000	34800	108000	22.50	24779500	2430000	22349500	91612200
5	7000	31500000	1500000	34800	108000	22.50	24410500	2430000	21980500	113592700
6	7000	31500000	1500000	34800	108000	22.50	24041500	2430000	21611500	135204200
7	7000	31500000	1500000	34800	108000	22.50	23672400	2430000	21242400	156446600
8	7000	31500000	1500000	34800	108000	22.50	23303400	2430000	20873400	177320000
9	7000	31500000	1500000	34800	108000	22.50	22934400	2430000	20504400	197824400
10	7000	31500000	1500000	34800	108000	22.50	22565400	2430000	20135400	217959800
11	5000	22500000	1071400	24900	77100	22.50	19647800	1734800	17913000	235872800
12	5000	22500000	1071400	24900	77100	22.50	19278800	1734800	17544000	253416800
13	5000	22500000	1071400	24900	77100	22.50	18909800	1734800	17175000	270591800
14	5000	22500000	1071400	24900	77100	22.50	18540800	1734800	16806000	287397800
15	5000	22500000	1071400	24900	77100	22.50	18171700	1734800	16436900	303834700
16	3500	15750000	750000	17400	54000	22.50	15795700	1215000	14580700	318415400
17	3500	15750000	750000	17400	54000	22.50	15426700	1215000	14211700	332627100
18	3500	15750000	750000	17400	54000	22.50	15057700	1215000	13842700	346469800
19	3500	15750000	750000	17400	54000	22.50	14688600	1215000	13473600	359943400
20	3500	15750000	750000	17400	54000	22.50	14319600	1215000	13104600	373048000
21	1500	6750000	321400	7500	23100	22.50	11020800	619800	10501000	383549000
22	1500	6750000	321400	7500	23100	22.50	10651700	619800	10131900	393680900
23	1500	6750000	321400	7500	23100	22.50	10282700	619800	9762900	403443800
24	1500	6750000	321400	7500	23100	22.50	9913700	619800	9393900	412837700
25	1500	6750000	321400	7500	23100	22.50	9544700	619800	9024900	421862600
26	1500	6750000	321400	7500	23100	22.50	9175600	619800	8655800	430518400
27	1500	6750000	321400	7500	23100	22.50	8806600	619800	8286800	438805200
28	1500	6750000	321400	7500	23100	22.50	8437600	619800	7917800	446723000
29	1500	6750000	321400	7500	23100	22.50	8068600	619800	7548800	454271800
30	1500	6750000	321400	7500	23100	22.50	7699500	619800	7179700	461451500
TOT	127500	573750000	27321000	634500	1966500		505698500	44247000	461451500	
LIFETIME AVERAGE INCREASE (DECREASE) IN UNIT OPERATING COST										
DOLLARS PER TON OF COAL BURNED							18.51	1.62	16.89	
MILLS PER KILOWATT-HOUR							7.93	0.69	7.24	
CENTS PER MILLION BTU HEAT INPUT							88.14	7.71	80.43	
DOLLARS PER TON OF SULFUR REMOVED							797.00	69.73	727.27	
PROCESS COST DISCOUNTED AT 11.2% TO INITIAL YEAR, DOLLARS							185574300	17670500	167903800	
LEVELIZED INCREASE (DECREASE) IN UNIT OPERATING COST EQUIVALENT TO DISCOUNTED PROCESS COST OVER LIFE OF POWER UNIT										
DOLLARS PER TON OF COAL BURNED							17.01	1.62	15.39	
MILLS PER KILOWATT-HOUR							7.29	0.69	6.60	
CENTS PER MILLION BTU HEAT INPUT							81.01	7.72	73.29	
DOLLARS PER TON OF SULFUR REMOVED							732.92	69.79	663.13	

TABLE A-108. MAGNESIA PROCESS

SUMMARY OF ESTIMATED CAPITAL INVESTMENT

(Variation from base case: 5.0% sulfur)

	Investment, $	% of total direct investment
Direct Investment		
Materials handling (conveyors, silos, bins, and feeders)	927,000	2.3
Feed preparation (mixer, tank, agitator, and pumps)	386,000	0.9
Gas handling (common feed plenum and booster fans, gas ducts and dampers from plenum to absorber, exhaust gas ducts and dampers from absorber to reheater and stack)	4,625,000	11.4
SO_2 absorption (four spray grid towers, including entrainment separators, tanks, agitators, and pumps)	5,447,000	13.3
Stack gas reheat (four indirect steam reheaters)	1,198,000	2.9
Chloride purge (four chloride scrubbers and entrainment separators, tanks, agitators, and pumps)	5,066,000	12.4
Slurry processing (centrifuge, conveyor, tank, agitator, and pumps)	1,481,000	3.6
Drying (dryer, conveyors, silos, fans, tanks, and pumps)	6,842,000	16.8
Calcining (calciner, cooler, bin, fans, conveyors, and silos)	3,046,000	7.4
Acid production (complete contact unit for sulfuric acid production)	8,112,000	19.8
Acid storage (storage and shipping facilities for 30-day production of sulfuric acid)	1,298,000	3.2
Subtotal	38,428,000	94.0
Services, utilities, and miscellaneous	2,306,000	5.6
Total process areas excluding pond construction	40,734,000	99.6
Incremental ash pond cost	154,000	0.4
Total direct investment	40,888,000	100.0
Indirect Investment		
Engineering design and supervision	2,029,000	5.0
Architect and engineering contractor	504,000	1.2
Construction expense	5,450,000	13.4
Contractor fees	1,611,000	3.9
Total indirect investment	9,594,000	23.5
Contingency	10,096,000	24.7
Total fixed investment	60,578,000	148.2
Other Capital Charges		
Allowance for startup and modifications	6,042,000	14.8
Interest during construction	7,269,000	17.7
Total depreciable investment	73,889,000	180.7
Land	42,000	0.1
Working capital	1,874,000	4.6
Total capital investment	75,805,000	185.3
	($152/kW)	

Basis
Evaluation represents project beginning mid-1977, ending mid-1980. Average cost basis for scaling, mid-1979.
Stack gas reheat to 175°F by indirect steam reheat.
Minimum in-process storage; only pumps are spared.
Investment requirements for fly ash removal and disposal excluded; FGD process investment estimate begins with common feed plenum downstream of the ESP.
Construction labor shortages with accompanying overtime pay incentive not considered.

TABLE A-109. MAGNESIA PROCESS

ANNUAL REVENUE REQUIREMENTS

(Variation from base case: 5.0% sulfur)

	Annual quantity	Unit cost, $	Total annual cost, $	% of average annual revenue requirements
Direct Costs				
Delivered raw materials				
MgO	2,260 tons	300.00/ton	678,000	3.32
Catalyst	2,800 liters	2.50/liter	7,000	0.03
Agricultural limestone	3,240 tons	15.00/ton	48,600	0.24
Total raw materials cost			733,600	3.59
Conversion costs				
Operating labor and supervision	51,000 man-hr	12.50/man-hr	637,500	3.12
Utilities				
Fuel oil	9,668,000 gal	0.40/gal	3,867,200	18.96
Steam	503,400 MBtu	2.00/MBtu	1,006,800	4.93
Process water	3,393,200 kgal	0.12/kgal	407,200	2.00
Electricity	71,017,000 kWh	0.029/kWh	2,059,500	10.09
Heat credit	208,600 MBtu	2.00/MBtu	(417,200)	(2.04)
Maintenance				
Labor and material			2,856,000	13.99
Analyses	9,130 man-hr	17.00/man-hr	155,200	0.76
Total conversion costs			10,572,200	51.81
Total direct costs			11,305,800	55.40
Indirect Costs				
Capital charges				
Depreciation, interim replacements, and insurance at 6.0% of total depreciable investment			4,433,300	21.72
Average cost of capital and taxes at 8.6% of total capital investment			6,519,200	31.95
Overheads				
Plant, 50% of conversion costs less utilities			1,824,400	8.94
Administrative, 10% of operating labor			63,800	0.31
Marketing, 10% of byproduct sales revenue			416,000	2.04
Total indirect costs			13,256,700	64.96
Gross average annual revenue requirements			24,562,500	120.36
Byproduct Sales Revenue				
100% sulfuric acid	166,200 tons	25.00/ton	(4,155,000)	(20.36)
Net annual revenue requirements			20,407,500	100.00

	Mills/kWh	$/ton coal burned	$/MBtu heat input	$/ton sulfur removed
Equivalent unit revenue requirements	5.83	13.60	0.65	380

Basis
- Midwest plant location, 1980 revenue requirements.
- Remaining life of power plant, 30 yr.
- Power unit on-stream time, 7,000 hr/yr.
- Coal burned, 1,500,100 tons/yr, 9,000 Btu/kWh.
- Stack gas reheat to 175°F.
- Sulfur removed, 53,730 short tons/yr.
- Investment and revenue requirement for removal and disposal of fly ash excluded.
- Total direct investment, $40,888,000; total depreciable investment, $73,889,000; and total capital investment, $75,805,000.
- All tons shown are 2,000 lb.

TABLE A-110

MAGNESIA PROCESS VARIATION FROM BASE CASE: 500 S REGULATED CO. ECONOMICS

TOTAL CAPITAL INVESTMENT 75605000

YEARS AFTER POWER UNIT START	ANNUAL OPERATION, KW-HR/KW	POWER UNIT HEAT REQUIREMENT, MILLION BTU/YEAR	POWER UNIT FUEL CONSUMPTION, TONS COAL/YEAR	SULFUR REMOVED BY POLLUTION CONTROL PROCESS, TONS/YEAR	BY-PRODUCT RATE, EQUIVALENT TONS/YEAR 100% SULFURIC ACID	NET REVENUE, $/TON 100% SULFURIC ACID	TOTAL OP. COST INCLUDING REGULATED ROI FOR POWER COMPANY, $/YEAR	TOTAL NET SALES REVENUE, $/YEAR	NET ANNUAL INCREASE (DECREASE) IN COST OF POWER, $	CUMULATIVE NET INCREASE (DECREASE) IN COST OF POWER, $
1	7000	31500000	1500000	53700	166200	22.50	30666100	3739500	26926600	26926600
2	7000	31500000	1500000	53700	166200	22.50	30242400	3739500	26502900	53429500
3	7000	31500000	1500000	53700	166200	22.50	29818800	3739500	26079300	79508800
4	7000	31500000	1500000	53700	166200	22.50	29395200	3739500	25655700	105164500
5	7000	31500000	1500000	53700	166200	22.50	28971500	3739500	25232000	130396500
6	7000	31500000	1500000	53700	166200	22.50	28547900	3739500	24808400	155204900
7	7000	31500000	1500000	53700	166200	22.50	28124200	3739500	24384700	179589600
8	7000	31500000	1500000	53700	166200	22.50	27700600	3739500	23961100	203550700
9	7000	31500000	1500000	53700	166200	22.50	27277000	3739500	23537500	227088200
10	7000	31500000	1500000	53700	166200	22.50	26853300	3739500	23113800	250202000
11	5000	22500000	1071400	38400	118700	22.50	23234300	2670800	20563500	270765500
12	5000	22500000	1071400	38400	118700	22.50	22810700	2670800	20139900	290905400
13	5000	22500000	1071400	38400	118700	22.50	22387000	2670800	19716200	310621600
14	5000	22500000	1071400	38400	118700	22.50	21963400	2670800	19292600	329914200
15	5000	22500000	1071400	38400	118700	22.50	21539800	2670800	18869000	348783200
16	3500	15750000	750000	26900	83100	22.50	18610200	1869800	16740400	365523600
17	3500	15750000	750000	26900	83100	22.50	18186600	1869800	16316800	381840400
18	3500	15750000	750000	26900	83100	22.50	17762900	1869800	15893100	397733500
19	3500	15750000	750000	26900	83100	22.50	17339300	1869800	15469500	413203000
20	3500	15750000	750000	26900	83100	22.50	16915700	1869800	15045900	428248900
21	1500	6750000	321400	11500	35600	22.50	12862200	801000	12061200	440310100
22	1500	6750000	321400	11500	35600	22.50	12438600	801000	11637600	451947700
23	1500	6750000	321400	11500	35600	22.50	12015000	801000	11214000	463161700
24	1500	6750000	321400	11500	35600	22.50	11591300	801000	10790300	473952000
25	1500	6750000	321400	11500	35600	22.50	11167700	801000	10366700	484318700
26	1500	6750000	321400	11500	35600	22.50	10744100	801000	9943100	494261800
27	1500	6750000	321400	11500	35600	22.50	10320400	801000	9519400	503781200
28	1500	6750000	321400	11500	35600	22.50	9896800	801000	9095800	512877000
29	1500	6750000	321400	11500	35600	22.50	9473200	801000	8672200	521549200
30	1500	6750000	321400	11500	35600	22.50	9049500	801000	8248500	529797700
TOT 127500		573750000	27321000	978500	3027000		597905700	68108000	529797700	
LIFETIME AVERAGE INCREASE (DECREASE) IN UNIT OPERATING COST										
DOLLARS PER TON OF COAL BURNED							21.88	2.49	19.39	
MILLS PER KILOWATT-HOUR							9.38	1.07	8.31	
CENTS PER MILLION BTU HEAT INPUT							104.21	11.87	92.34	
DOLLARS PER TON OF SULFUR REMOVED							611.04	69.60	541.44	
PROCESS COST DISCOUNTED AT 11.2% TO INITIAL YEAR, DOLLARS							219944300	27195100	192749200	
LEVELIZED INCREASE (DECREASE) IN UNIT OPERATING COST EQUIVALENT TO DISCOUNTED PROCESS COST OVER LIFE OF POWER UNIT										
DOLLARS PER TON OF COAL BURNED							20.16	2.49	17.67	
MILLS PER KILOWATT-HOUR							8.64	1.07	7.57	
CENTS PER MILLION BTU HEAT INPUT							96.01	11.87	84.14	
DOLLARS PER TON OF SULFUR REMOVED							563.09	69.62	493.47	

TABLE A-111. MAGNESIA PROCESS

SUMMARY OF ESTIMATED CAPITAL INVESTMENT

(Variation from base case: 1,000-MW existing)

	Investment, $	% of total direct investment
Direct Investment		
Materials handling (conveyors, silos, bins, and feeders)	1,097,000	1.9
Feed preparation (mixer, tank, agitator, and pumps)	447,000	0.8
Gas handling (common feed plenum and booster fans, gas ducts and dampers from plenum to absorber, exhaust gas ducts and dampers from absorber to reheater and stack)	7,409,000	13.0
SO_2 absorption (four spray grid towers, including entrainment separators, tanks, agitators, and pumps)	9,418,000	16.6
Stack gas reheat (four indirect steam reheaters)	1,973,000	3.5
Chloride purge (four chloride scrubbers and entrainment separators, tanks, agitators, and pumps)	8,521,000	15.0
Slurry processing (centrifuge, conveyor, tank, agitator, and pumps)	1,766,000	3.1
Drying (dryer, conveyors, silos, fans, tanks, and pumps)	7,802,000	13.7
Calcining (calciner, cooler, bin, fans, conveyors, and silos)	3,670,000	6.5
Acid production (complete contact unit for sulfuric acid production)	9,750,000	17.1
Acid storage (storage and shipping facilities for 30-day production of sulfuric acid)	1,528,000	2.7
Subtotal	53,381,000	93.9
Services, utilities, and miscellaneous	3,203,000	5.6
Total process areas excluding pond construction	56,584,000	99.5
Incremental ash pond cost	308,000	0.5
Total direct investment	56,892,000	100.0
Indirect Investment		
Engineering design and supervision	2,295,000	4.0
Architect and engineering contractor	569,000	1.0
Construction expense	7,172,000	12.6
Contractor fees	2,070,000	3.6
Total indirect investment	12,106,000	21.2
Contingency	13,800,000	24.3
Total fixed investment	82,798,000	145.5
Other Capital Charges		
Allowance for startup and modifications	8,249,000	14.5
Interest during construction	9,935,000	17.5
Total depreciable investment	100,982,000	177.5
Land	66,000	0.1
Working capital	2,593,000	4.6
Total capital investment	103,641,000	182.2
	($104/kW)	

Basis
- Evaluation represents project beginning mid-1977, ending mid-1980. Average cost basis for scaling, mid-1979.
- Stack gas reheat to 175°F by indirect steam reheat.
- Minimum in-process storage; only pumps are spared.
- Investment requirements for fly ash removal and disposal excluded; FGD process investment estimate begins with common feed plenum downstream of the ESP.
- Construction labor shortages with accompanying overtime pay incentive not considered.

TABLE A-112. MAGNESIA PROCESS

ANNUAL REVENUE REQUIREMENTS

(Variation from base case: 1,000 MW existing)

	Annual quantity	Unit cost, $	Total annual cost, $	% of average annual revenue requirements
Direct Costs				
Delivered raw materials				
MgO	2,940 tons	300.00/ton	882,000	3.06
Catalyst	3,600 liters	2.50/liter	9,000	0.03
Agricultural limestone	6,480 tons	15.00/ton	97,200	0.34
Total raw materials cost			988,200	3.43
Conversion costs				
Operating labor and supervision	67,200 man-hr	12.50/man-hr	840,000	2.92
Utilities				
Fuel oil	12,572,000 gal	0.40/gal	5,028,800	17.45
Steam	1,006,900 MBtu	2.00/MBtu	2,013,800	6.99
Process water	4,718,400 kgal	0.12/kgal	566,200	1.97
Electricity	122,905,000 kWh	0.028/kWh	3,441,300	11.94
Heat credit	271,200 MBtu	2.00/MBtu	(542,400)	(1.88)
Maintenance				
Labor and material			3,404,300	11.82
Analyses	13,810 man-hr	17.00/man-hr	234,800	0.81
Total conversion costs			14,986,800	52.02
Total direct costs			15,975,000	55.45
Indirect Costs				
Capital charges				
Depreciation, interim replacements, and insurance at 6.4% of total depreciable investment			6,462,800	22.43
Average cost of capital and taxes at 8.6% of total capital investment			8,913,100	30.93
Overheads				
Plant, 50% of conversion costs less utilities			2,239,600	7.77
Administrative, 10% of operating labor			84,000	0.29
Marketing, 10% of byproduct sales revenue			540,300	1.88
Total indirect costs			18,239,800	63.30
Gross average annual revenue requirements			34,214,800	118.75
Byproduct Sales Revenue				
100% sulfuric acid	216,100 tons	25.00/ton	(5,402,500)	(18.75)
Net annual revenue requirements			28,812,300	100.00

	Mills/kWh	$/ton coal burned	$/MBtu heat input	$/ton sulfur removed
Equivalent unit revenue requirements	4.12	9.60	0.46	415

Basis
- Midwest plant location, 1980 revenue requirements.
- Remaining life of power plant, 25 yr.
- Power unit on-stream time, 7,000 hr/yr.
- Coal burned, 2,999,900 tons/yr, 9,000 Btu/kWh.
- Stack gas reheat to 175°F.
- Sulfur removed, 69,490 short tons/yr.
- Investment and revenue requirement for removal and disposal of fly ash excluded.
- Total direct investment, $56,892,000; total depreciable investment, $100,982,000; and total capital investment, $103,641,000.
- All tons shown are 2,000 lb.

TABLE A-113

MAGNESIA PROCESS VARIATION FROM BASE CASE: 1.000 MW EXISTING REGULATED CO. ECONOMICS

TOTAL CAPITAL INVESTMENT 103641000

YEARS AFTER POWER UNIT START	ANNUAL OPERATION, KW-HR/KW	POWER UNIT HEAT REQUIREMENT, MILLION BTU/YEAR	POWER UNIT FUEL CONSUMPTION, TONS COAL/YEAR	SULFUR REMOVED BY POLLUTION CONTROL PROCESS, TONS/YEAR	BY-PRODUCT RATE, EQUIVALENT TONS/YEAR 100% SULFURIC ACID	NET REVENUE, $/TON 100% SULFURIC ACID	TOTAL OP. COST INCLUDING REGULATED ROI FOR POWER COMPANY, $/YEAR	TOTAL NET SALES REVENUE, $/YEAR	NET ANNUAL INCREASE (DECREASE) IN COST OF POWER, $	CUMULATIVE NET INCREASE (DECREASE) IN COST OF POWER, $
1										
2										
3										
4										
5										
6	7000	63000000	3000000	69500	216100	22.50	43261300	4862300	38399000	38399000
7	7000	63000000	3000000	69500	216100	22.50	42566500	4862300	37704200	76103200
8	7000	63000000	3000000	69500	216100	22.50	41871700	4862300	37009400	113112600
9	7000	63000000	3000000	69500	216100	22.50	41177000	4862300	36314700	149427300
10	7000	63000000	3000000	69500	216100	22.50	40482200	4862300	35619900	185047200
11	5000	45000000	2142900	49600	154400	22.50	35260500	3674000	31786500	216833700
12	5000	45000000	2142900	49600	154400	22.50	34565700	3674000	31091700	247925400
13	5000	45000000	2142900	49600	154400	22.50	33870900	3674000	30396900	278322300
14	5000	45000000	2142900	49600	154400	22.50	33176200	3674000	29702200	308024500
15	5000	45000000	2142900	49600	154400	22.50	32481400	3674000	29007400	337031900
16	3500	31500000	1500000	34700	108000	22.50	28258600	2630000	25828600	362860500
17	3500	31500000	1500000	34700	108000	22.50	27563800	2630000	25133800	387994300
18	3500	31500000	1500000	34700	108000	22.50	26869000	2630000	24439000	412433300
19	3500	31500000	1500000	34700	108000	22.50	26174300	2630000	23744300	436177600
20	3500	31500000	1500000	34700	108000	22.50	25479500	2630000	23049500	459227100
21	1500	13500000	642900	14900	46300	22.50	19728500	1041800	18686700	477913800
22	1500	13500000	642900	14900	46300	22.50	19033700	1041800	17991900	495905700
23	1500	13500000	642900	14900	46300	22.50	18338900	1041800	17297100	513202800
24	1500	13500000	642900	14900	46300	22.50	17644200	1041800	16602400	529805200
25	1500	13500000	642900	14900	46300	22.50	16949400	1041800	15907600	545712800
26	1500	13500000	642900	14900	46300	22.50	16254700	1041800	15212900	560925700
27	1500	13500000	642900	14900	46300	22.50	15559900	1041800	14518100	575443800
28	1500	13500000	642900	14900	46300	22.50	14865100	1041800	13823300	589267100
29	1500	13500000	642900	14900	46300	22.50	14170400	1041800	13128600	602395700
30	1500	13500000	642900	14900	46300	22.50	13475600	1041800	12433800	614829500
TOT	92500	832500000	39643500	918000	2855500		679079000	64249500	614829500	
LIFETIME AVERAGE INCREASE (DECREASE) IN UNIT OPERATING COST										
DOLLARS PER TON OF COAL BURNED							17.13	1.62	15.51	
MILLS PER KILOWATT-HOUR							7.34	0.69	6.65	
CENTS PER MILLION BTU HEAT INPUT							81.57	7.72	73.85	
DOLLARS PER TON OF SULFUR REMOVED							739.74	69.99	669.75	
PROCESS COST DISCOUNTED AT 11.2% TO INITIAL YEAR, DOLLARS							282889900	29722600	253167300	
LEVELIZED INCREASE (DECREASE) IN UNIT OPERATING COST EQUIVALENT TO DISCOUNTED PROCESS COST OVER LIFE OF POWER UNIT										
DOLLARS PER TON OF COAL BURNED							15.43	1.62	13.81	
MILLS PER KILOWATT-HOUR							6.61	0.69	5.92	
CENTS PER MILLION BTU HEAT INPUT							73.46	7.72	65.74	
DOLLARS PER TON OF SULFUR REMOVED							666.09	69.98	596.11	

TABLE A-114. MAGNESIA PROCESS

SUMMARY OF ESTIMATED CAPITAL INVESTMENT

(Variation from base case: 1,000 MW)

	Investment, $	% of total direct investment
Direct Investment		
Materials handling (conveyors, silos, bins, and feeders)	1,074,000	1.9
Feed preparation (mixer, tank, agitator, and pumps)	438,000	0.8
Gas handling (common feed plenum and booster fans, gas ducts and dampers from plenum to absorber, exhaust gas ducts and dampers from absorber to reheater and stack)	7,243,000	13.0
SO_2 absorption (four spray grid towers, including entrainment separators, tanks, agitators, and pumps)	9,167,000	16.5
Stack gas reheat (four indirect steam reheaters)	1,925,000	3.5
Chloride purge (four chloride scrubbers and entrainment separators, tanks, agitators, and pumps)	8,308,000	14.9
Slurry processing (centrifuge, conveyor, tank, agitator, and pumps)	1,726,000	3.1
Drying (dryer, conveyors, silos, fans, tanks, and pumps)	7,670,000	13.8
Calcining (calciner, cooler, bin, fans, conveyors, and silos)	3,582,000	6.4
Acid production (complete contact unit for sulfuric acid production)	9,516,000	17.1
Acid storage (storage and shipping facilities for 30-day production of sulfuric acid)	1,496,000	2.7
Subtotal	52,145,000	93.8
Services, utilities, and miscellaneous	3,129,000	5.7
Total process areas excluding pond construction	55,274,000	99.5
Incremental ash pond cost	298,000	0.5
Total direct investment	55,572,000	100.0
Indirect Investment		
Engineering design and supervision	2,278,000	4.1
Architect and engineering contractor	564,000	1.0
Construction expense	7,034,000	12.6
Contractor fees	2,034,000	3.7
Total indirect investment	11,910,000	21.4
Contingency	13,496,000	24.3
Total fixed investment	80,978,000	145.7
Other Capital Charges		
Allowance for startup and modifications	8,068,000	14.5
Interest during construction	9,717,000	17.5
Total depreciable investment	98,763,000	177.7
Land	69,000	0.1
Working capital	2,521,000	4.5
Total capital investment	101,353,000	182.3
	($101/kW)	

Basis
- Evaluation represents project beginning mid-1977, ending mid-1980. Average cost basis for scaling, mid-1979.
- Stack gas reheat to 175°F by indirect steam reheat.
- Minimum in-process storage; only pumps are spared.
- Investment requirements for fly ash removal and disposal excluded; FGD process investment estimate begins with common feed plenum downstream of the ESP.
- Construction labor shortages with accompanying overtime pay incentive not considered.

TABLE A-115. MAGNESIA PROCESS

ANNUAL REVENUE REQUIREMENTS

(Variation from base case: 1,000 MW)

	Annual quantity	Unit cost, $	Total annual cost, $	% of average annual revenue requirements
Direct Costs				
Delivered raw materials				
MgO	2,840 tons	300.00/ton	852,000	3.07
Catalyst	3,410 liters	2.50/liter	8,500	0.03
Agricultural limestone	6,260 tons	15.00/ton	93,900	0.34
Total raw materials cost			954,400	3.44
Conversion costs				
Operating labor and supervision	67,200 man-hr	12.50/man-hr	840,000	3.03
Utilities				
Fuel oil	12,153,000 gal	0.40/gal	4,861,200	17.53
Steam	973,300 MBtu	2.00/MBtu	1,946,600	7.02
Process water	4,561,100 kgal	0.12/kgal	547,300	1.97
Electricity	118,826,000 kWh	0.028/kWh	3,327,100	11.99
Heat credit	262,200 MBtu	2.00/MBtu	(524,400)	(1.89)
Maintenance				
Labor and material			3,325,400	11.99
Analyses	13,810 man-hr	17.00/man-hr	234,800	0.85
Total conversion costs			14,558,000	52.49
Total direct costs			15,512,400	55.93
Indirect Costs				
Capital charges				
Depreciation, interim replacements, and insurance at 6.0% of total depreciable investment			5,925,800	21.36
Average cost of capital and taxes at 8.6% of total capital investment			8,716,400	31.42
Overheads				
Plant, 50% of conversion costs less utilities			2,200,100	7.93
Administrative, 10% of operating labor			84,000	0.31
Marketing, 10% of byproduct sales revenue			522,300	1.88
Total indirect costs			17,448,600	62.90
Gross average annual revenue requirements			32,961,000	118.83
Byproduct Sales Revenue				
100% sulfuric acid	208,900 tons	25.00/ton	(5,222,500)	(18.83)
Net annual revenue requirements			27,738,500	100.00

	Mills/kWh	$/ton coal burned	$/MBtu heat input	$/ton sulfur removed
Equivalent unit revenue requirements	3.96	9.56	0.46	417

Basis
- Midwest plant location, 1980 revenue requirements.
- Remaining life of power plant, 30 yr.
- Power unit on-stream time, 7,000 hr/yr.
- Coal burned, 2,900,100 tons/yr, 8,700 Btu/kWh.
- Stack gas reheat to 175°F.
- Sulfur removed, 66,540 short tons/yr.
- Investment and revenue requirement for removal and disposal of fly ash excluded.
- Total direct investment, $55,572,000; total depreciable investment, $98,763,000; and total capital investment, $101,353,000.
- All tons shown are 2,000 lb.

TABLE A-116

MAGNESIA PROCESS VARIATION FROM BASE CASE: 1,000 MW REGULATED CO. ECONOMICS

TOTAL CAPITAL INVESTMENT 101353000

YEARS AFTER POWER UNIT START	ANNUAL OPERATION, KW-HR/KW	POWER UNIT HEAT REQUIREMENT, MILLION BTU /YEAR	POWER UNIT FUEL CONSUMPTION, TONS COAL /YEAR	SULFUR REMOVED BY POLLUTION CONTROL PROCESS, TONS/YEAR	BY-PRODUCT RATE, EQUIVALENT TONS/YEAR 100% SULFURIC ACID	NET REVENUE, $/TON 100% SULFURIC ACID	TOTAL OP. COST INCLUDING REGULATED ROI FOR POWER COMPANY, $/YEAR	TOTAL NET SALES REVENUE, $/YEAR	NET ANNUAL INCREASE (DECREASE) IN COST OF POWER, $	CUMULATIVE NET INCREASE (DECREASE) IN COST OF POWER, $
1	7000	60900000	2900000	66500	208900	22.50	41155300	4800300	36455000	36455000
2	7000	60900000	2900000	66500	208900	22.50	40589100	4800300	35888800	72343800
3	7000	60900000	2900000	66500	208900	22.50	40022800	4800300	35322500	107666300
4	7000	60900000	2900000	66500	208900	22.50	39456600	4800300	34756300	142422600
5	7000	60900000	2900000	66500	208900	22.50	38890400	4800300	34190100	176612700
6	7000	60900000	2900000	66500	208900	22.50	38324100	4800300	33623800	210236500
7	7000	60900000	2900000	66500	208900	22.50	37757900	4800300	33057600	243294100
8	7000	60900000	2900000	66500	208900	22.50	37191600	4800300	32491300	275785400
9	7000	60900000	2900000	66500	208900	22.50	36625400	4800300	31925100	307710500
10	7000	60900000	2900000	66500	208900	22.50	36059100	4800300	31358800	339069300
11	5000	43500000	2071400	47500	149200	22.50	31097500	3857000	27740500	366809800
12	5000	43500000	2071400	47500	149200	22.50	30531300	3857000	27174300	393984100
13	5000	43500000	2071400	47500	149200	22.50	29965000	3857000	26608000	420592100
14	5000	43500000	2071400	47500	149200	22.50	29398800	3857000	26041800	446633900
15	5000	43500000	2071400	47500	149200	22.50	28832500	3857000	25475500	472109400
16	3500	30450000	1450000	33300	104500	22.50	24838900	2851300	22487600	494597000
17	3500	30450000	1450000	33300	104500	22.50	24272700	2851300	21921400	516518400
18	3500	30450000	1450000	33300	104500	22.50	23706400	2851300	21355100	537873500
19	3500	30450000	1450000	33300	104500	22.50	23140200	2851300	20788900	558662400
20	3500	30450000	1450000	33300	104500	22.50	22573900	2851300	20222600	578885000
21	1500	13050000	621400	14300	44800	22.50	17092200	1008000	16084200	594969200
22	1500	13050000	621400	14300	44800	22.50	16526000	1008000	15518000	610487200
23	1500	13050000	621400	14300	44800	22.50	15959700	1008000	14951700	625438900
24	1500	13050000	621400	14300	44800	22.50	15393500	1008000	14385500	639824400
25	1500	13050000	621400	14300	44800	22.50	14827200	1008000	13819200	653643600
26	1500	13050000	621400	14300	44800	22.50	14261000	1008000	13253000	666896600
27	1500	13050000	621400	14300	44800	22.50	13694700	1008000	12686700	679583300
28	1500	13050000	621400	14300	44800	22.50	13128500	1008000	12120500	691703800
29	1500	13050000	621400	14300	44800	22.50	12562300	1008000	11554300	703258100
30	1500	13050000	621400	14300	44800	22.50	11996000	1008000	10988000	714246100
TOT 127500		1109250000	52821000	1212000	3805500		799870600	85624500	714246100	

LIFETIME AVERAGE INCREASE (DECREASE) IN UNIT OPERATING COST

DOLLARS PER TON OF COAL BURNED	15.14	1.62	13.52
MILLS PER KILOWATT-HOUR	6.27	0.67	5.60
CENTS PER MILLION BTU HEAT INPUT	72.11	7.72	64.39
DOLLARS PER TON OF SULFUR REMOVED	659.96	70.65	589.31

PROCESS COST DISCOUNTED AT 11.2% TO INITIAL YEAR, DOLLARS 294910900 34284000 260726900

LEVELIZED INCREASE (DECREASE) IN UNIT OPERATING COST EQUIVALENT TO DISCOUNTED PROCESS COST OVER LIFE OF POWER UNIT

DOLLARS PER TON OF COAL BURNED	13.98	1.62	12.36
MILLS PER KILOWATT-HOUR	5.79	0.67	5.12
CENTS PER MILLION BTU HEAT INPUT	66.59	7.72	58.87
DOLLARS PER TON OF SULFUR REMOVED	609.70	70.67	539.03

TABLE A-117. MAGNESIA PROCESS

SUMMARY OF ESTIMATED CAPITAL INVESTMENT

(Variation from base case: 90% SO_2 removal)

	Investment, $	% of total direct investment
Direct Investment		
Materials handling (conveyors, silos, bins, and feeders)	765,000	2.1
Feed preparation (mixer, tank, agitator, and pumps)	326,000	0.9
Gas handling (common feed plenum and booster fans, gas ducts and dampers from plenum to absorber, exhaust gas ducts and dampers from absorber to reheater and stack)	4,625,000	12.5
SO_2 absorption (four spray grid towers, including entrainment separators, tanks, agitators, and pumps)	5,447,000	14.8
Stack gas reheat (four indirect steam reheaters)	1,198,000	3.2
Chloride purge (four chloride scrubbers and entrainment separators, tanks, agitators, and pumps)	5,066,000	13.7
Slurry processing (centrifuge, conveyor, tank, agitator, and pumps)	1,211,000	3.3
Drying (dryer, conveyors, silos, fans, tanks, and pumps)	5,888,000	16.0
Calcining (calciner, cooler, bin, fans, conveyors, and silos)	2,461,000	6.7
Acid production (complete contact unit for sulfuric acid production)	6,576,000	17.9
Acid storage (storage and shipping facilities for 30-day production of sulfuric acid)	1,077,000	2.9
Subtotal	34,640,000	94.0
Services, utilities, and miscellaneous	2,078,000	5.6
Total process areas excluding pond construction	36,718,000	99.6
Incremental ash pond cost	154,000	0.4
Total direct investment	36,872,000	100.0
Indirect Investment		
Engineering design and supervision	1,922,000	5.2
Architect and engineering contractor	477,000	1.3
Construction expense	5,002,000	13.6
Contractor fees	1,489,000	4.0
Total indirect investment	8,890,000	24.1
Contingency	9,152,000	24.8
Total fixed investment	54,914,000	148.9
Other Capital Charges		
Allowance for startup and modifications	5,476,000	14.9
Interest during construction	6,590,000	17.9
Total depreciable investment	66,980,000	181.7
Land	42,000	0.1
Working capital	1,598,000	4.3
Total capital investment	68,620,000	186.1
	($137/kW)	

Basis

Evaluation represents project beginning mid-1977, ending mid-1980. Average cost basis for scaling, mid-1979.
Stack gas reheat to 175°F by indirect steam reheat.
Minimum in-process storage; only pumps are spared.
Investment requirements for fly ash removal and disposal excluded; FGD process investment estimate begins with common feed plenum downstream of the ESP.
Construction labor shortages with accompanying overtime pay incentive not considered.

TABLE A-118. MAGNESIA PROCESS

ANNUAL REVENUE REQUIREMENTS

(Variation from base case: 90% SO_2 removal)

	Annual quantity	Unit cost, $	Total annual cost, $	% of average annual revenue requirements
Direct Costs				
Delivered raw materials				
MgO	1,680 tons	300.00/ton	504,000	2.73
Catalyst	2,100 liters	2.50/liter	5,300	0.03
Agricultural limestone	3,240 tons	15.00/ton	48,600	0.26
Total raw materials cost			557,900	3.02
Conversion costs				
Operating labor and supervision	47,500 man-hr	12.50/man-hr	593,800	3.21
Utilities				
Fuel oil	7,161,000 gal	0.40/gal	2,864,400	15.51
Steam	503,400 MBtu	2.00/MBtu	1,006,800	5.45
Process water	2,626,700 kgal	0.12/kgal	315,200	1.71
Electricity	64,097,000 kWh	0.029/kWh	1,858,800	10.06
Heat credit	154,500 MBtu	2.00/MBtu	(309,000)	(1.67)
Maintenance				
Labor and material			2,574,900	13.94
Analyses	8,500 man-hr	17.00/man-hr	144,500	0.78
Total conversion costs			9,049,400	48.99
Total direct costs			9,607,300	52.01
Indirect Costs				
Capital charges				
Depreciation, interim replacements, and insurance at 6.0% of total depreciable investment			4,018,800	21.75
Average cost of capital and taxes at 8.6% of total capital investment			5,901,300	31.94
Overheads				
Plant, 50% of conversion costs less utilities			1,656,600	8.97
Administrative, 10% of operating labor			59,400	0.32
Marketing, 10% of byproduct sales revenue			307,800	1.67
Total indirect costs			11,943,900	64.65
Gross average annual revenue requirements			21,551,200	116.66
Byproduct Sales Revenue				
100% sulfuric acid	123,100 tons	25.00/ton	(3,077,500)	(16.66)
Net annual revenue requirements			18,473,700	100.00

	Mills/kWh	$/ton coal burned	$/MBtu heat input	$/ton sulfur removed
Equivalent unit revenue requirements	5.28	12.31	0.59	464

Basis
- Midwest plant location, 1980 revenue requirements.
- Remaining life of power plant, 30 yr.
- Power unit on-stream time, 7,000 hr/yr.
- Coal burned, 1,500,100 tons/yr, 9,000 Btu/kWh.
- Stack gas reheat to 175°F.
- Sulfur removed, 39,800 short tons/yr.
- Investment and revenue requirement for removal and disposal of fly ash excluded.
- Total direct investment, $36,872,000; total depreciable investment, $66,980,000; and total capital investment, $68,620,000.
- All tons shown are 2,000 lb.

TABLE A-119

MAGNESIA PROCESS VARIATION FROM BASE CASE: 90% SO2 REMOVAL REGULATED CO. ECONOMICS

TOTAL CAPITAL INVESTMENT 68628000

YEARS AFTER POWER UNIT START	ANNUAL OPERATION, KW-HR/KW	POWER UNIT HEAT REQUIREMENT, MILLION BTU/YEAR	POWER UNIT FUEL CONSUMPTION, TONS COAL/YEAR	SULFUR REMOVED BY POLLUTION CONTROL PROCESS, TONS/YEAR	BY-PRODUCT RATE, EQUIVALENT TONS/YEAR 100% SULFURIC ACID	NET REVENUE, $/TON 100% SULFURIC ACID	TOTAL OP. COST INCLUDING REGULATED ROI FOR POWER COMPANY, $/YEAR	TOTAL NET SALES REVENUE, $/YEAR	NET ANNUAL INCREASE (DECREASE) IN COST OF POWER, $	CUMULATIVE NET INCREASE (DECREASE) IN COST OF POWER, $
1	7000	31500000	1500000	39800	123100	22.50	27145000	2769800	24375200	24375200
2	7000	31500000	1500000	39800	123100	22.50	26761000	2769800	23991200	48366400
3	7000	31500000	1500000	39800	123100	22.50	26377000	2769800	23607200	71973600
4	7000	31500000	1500000	39800	123100	22.50	25993000	2769800	23223200	95196800
5	7000	31500000	1500000	39800	123100	22.50	25608900	2769800	22839100	118035900
6	7000	31500000	1500000	39800	123100	22.50	25224900	2769800	22455100	140491000
7	7000	31500000	1500000	39800	123100	22.50	24840900	2769800	22071100	162562100
8	7000	31500000	1500000	39800	123100	22.50	24456900	2769800	21687100	184249200
9	7000	31500000	1500000	39800	123100	22.50	24072800	2769800	21303000	205552200
10	7000	31500000	1500000	39800	123100	22.50	23688800	2769800	20919000	226471200
11	5000	22500000	1071400	28400	87900	22.50	20591200	1977800	18613400	245084600
12	5000	22500000	1071400	28400	87900	22.50	20207200	1977800	18229400	263314000
13	5000	22500000	1071400	28400	87900	22.50	19823100	1977800	17845300	281159300
14	5000	22500000	1071400	28400	87900	22.50	19439100	1977800	17461300	298620600
15	5000	22500000	1071400	28400	87900	22.50	19055100	1977800	17077300	315697900
16	3500	15750000	750000	19900	61600	22.50	16536800	1386000	15150800	330848700
17	3500	15750000	750000	19900	61600	22.50	16152700	1386000	14766700	345615400
18	3500	15750000	750000	19900	61600	22.50	15768700	1386000	14382700	359998100
19	3500	15750000	750000	19900	61600	22.50	15384700	1386000	13998700	373996800
20	3500	15750000	750000	19900	61600	22.50	15000700	1386000	13614700	387611500
21	1500	6750000	321400	8500	26400	22.50	11509000	594000	10915000	398526500
22	1500	6750000	321400	8500	26400	22.50	11124900	594000	10530900	409057400
23	1500	6750000	321400	8500	26400	22.50	10740900	594000	10146900	419204300
24	1500	6750000	321400	8500	26400	22.50	10356900	594000	9762900	428967200
25	1500	6750000	321400	8500	26400	22.50	9972900	594000	9378900	438346100
26	1500	6750000	321400	8500	26400	22.50	9588800	594000	8994800	447340900
27	1500	6750000	321400	8500	26400	22.50	9204800	594000	8610800	455951700
28	1500	6750000	321400	8500	26400	22.50	8820800	594000	8226800	464178500
29	1500	6750000	321400	8500	26400	22.50	8436800	594000	7842800	472021300
30	1500	6750000	321400	8500	26400	22.50	8052700	594000	7458700	479480000
TOT	127500	573750000	27321000	724500	2242500		529937000	50857000	479480000	
LIFETIME AVERAGE INCREASE (DECREASE) IN UNIT OPERATING COST										
DOLLARS PER TON OF COAL BURNED							19.40	1.85	17.55	
MILLS PER KILOWATT-HOUR							8.31	0.79	7.52	
CENTS PER MILLION BTU HEAT INPUT							92.36	8.79	83.57	
DOLLARS PER TON OF SULFUR REMOVED							731.45	69.64	661.81	
PROCESS COST DISCOUNTED AT 11.2% TO INITIAL YEAR, DOLLARS							194608000	20243800	174464200	
LEVELIZED INCREASE (DECREASE) IN UNIT OPERATING COST EQUIVALENT TO DISCOUNTED PROCESS COST OVER LIFE OF POWER UNIT										
DOLLARS PER TON OF COAL BURNED							17.84	1.85	15.99	
MILLS PER KILOWATT-HOUR							7.65	0.80	6.85	
CENTS PER MILLION BTU HEAT INPUT							84.95	8.79	76.16	
DOLLARS PER TON OF SULFUR REMOVED							672.45	69.60	602.85	

TABLE A-120. MAGNESIA PROCESS

SUMMARY OF ESTIMATED CAPITAL INVESTMENT

(Variation from base case: oil-fired, existing)

	Investment, $	% of total direct investment
Direct Investment		
Materials handling (conveyors, silos, bins, and feeders)	417,000	1.9
Feed preparation (mixer, tank, agitator, and pumps)	191,000	0.9
Gas handling (common feed plenum and booster fans, gas ducts and dampers from plenum to absorber, exhaust gas ducts and dampers from absorber to reheater and stack)	4,764,000	21.2
SO_2 absorption (four spray grid towers, including entrainment separators, tanks, agitators, and pumps)	5,173,000	23.1
Stack gas reheat (four direct steam reheaters)	1,063,000	4.7
Chloride purge	-	-
Slurry processing (centrifuge, conveyor, tank, agitator, and pumps)	642,000	2.9
Drying (dryer, conveyors, silos, fans, tanks, and pumps)	3,664,000	16.3
Calcining (calciner, cooler, bin, fans, conveyors, and silos)	1,254,000	5.6
Acid production (complete contact unit for sulfuric acid production)	3,384,000	15.1
Acid storage (storage and shipping facilities for 30-day production of sulfuric acid)	598,000	2.7
Subtotal	21,150,000	94.3
Services, utilities, and miscellaneous	1,269,000	5.7
Total direct investment	22,419,000	100.0
Indirect Investment		
Engineering design and supervision	1,366,000	6.1
Architect and engineering contractor	341,000	1.5
Construction expense	3,303,000	14.7
Contractor fees	1,020,000	4.5
Total indirect investment	6,030,000	26.9
Contingency	5,690,000	25.4
Total fixed investment	34,139,000	152.3
Other Capital Charges		
Allowance for startup and modifications	3,414,000	15.2
Interest during construction	4,097,000	18.3
Total depreciable investment	41,650,000	185.8
Land	27,000	0.1
Working capital	958,000	4.4
Total capital investment	42,635,000	190.3
	($85/kW)	

Basis
- Evaluation represents project beginning mid-1977, ending mid-1980. Average cost basis for scaling, mid-1979.
- Stack gas reheat to 175°F by indirect steam reheat.
- Minimum in-process storage; only pumps are spared.
- Investment requirements for fly ash removal and disposal excluded; FGD process investment estimate begins with common feed plenum downstream of the ESP.
- Construction labor shortages with accompanying overtime pay incentive not considered.

TABLE A-121. MAGNESIA PROCESS

ANNUAL REVENUE REQUIREMENTS

(Variation from base case: oil-fired, existing)

	Annual quantity	Unit cost, $	Total annual cost, $	% of average annual revenue requirements
Direct Costs				
Delivered raw materials				
MgO	650 tons	300.00/ton	195,000	1.58
Catalyst	790 liters	2.50/liter	2,000	0.02
Total raw materials cost			197,000	1.60
Conversion costs				
Operating labor and supervision	45,400 man-hr	12.50/man-hr	567,500	4.60
Utilities				
Fuel oil	5,232,000 gal	0.40/gal	2,092,800	17.79
Process water	1,217,800 kgal	0.12/kgal	146,100	1.19
Electricity	39,018,000 kWh	0.029/kWh	1,131,500	9.18
Heat credit	59,800 MBtu	2.00/MBtu	(119,600)	(0.60)
Maintenance				
Labor and material			1,569,300	12.73
Analyses	8,100 man-hr	17.00/man-hr	137,700	1.12
Total conversion costs			5,525,300	46.01
Total direct costs			5,722,300	47.61
Indirect Costs				
Capital charges				
Depreciation, interim replacements, and insurance at 6.4% of total depreciable investment			2,665,600	21.63
Average cost of capital and taxes at 8.6% of total capital investment			3,666,600	29.76
Overheads				
Plant, 50% of conversion costs less utilities			1,137,300	9.23
Administrative, 10% of operating labor			56,800	0.46
Marketing, 10% of byproduct sales revenue			119,000	0.97
Total indirect costs			7,645,300	62.04
Gross average annual revenue requirements			13,367,600	109.65
Byproduct Sales Revenue				
100% sulfuric acid	47,600 tons	25.00/ton	(1,190,000)	(9.65)
Net annual revenue requirements			12,177,600	100.00

	Mills/kWh	$/bbl oil burned	$/MBtu heat input	$/ton sulfur removed
Equivalent unit revenue requirements	3.48	2.28	0.38	818

Basis
- Midwest plant location, 1980 revenue requirements.
- Remaining life of power plant, 25 yr.
- Power unit on-stream time, 7,000 hr/yr.
- Oil burned, 5,350,000 bbl/yr, 9,200 Btu/kWh.
- Stack gas reheat to 175°F.
- Sulfur removed, 14,880 short tons/yr.
- Investment and revenue requirement for removal and disposal of fly ash excluded.
- Total direct investment, $22,419,000; total depreciable investment, $41,650,000; and total capital investment, $42,655,000.
- All tons shown are 2,000 lb.

TABLE A-122

MAGNESIA PROCESS VARIATION FROM BASE CASE: OIL-FIRED, EXISTING REGULATED CO. ECONOMICS

TOTAL CAPITAL INVESTMENT 42635000

YEARS AFTER POWER UNIT START	ANNUAL OPERATION, KW-HR/KW	POWER UNIT HEAT REQUIREMENT, MILLION BTU/YEAR	POWER UNIT FUEL CONSUMPTION, BARRELS OIL/YEAR	SULFUR REMOVED BY POLLUTION CONTROL PROCESS, TONS/YEAR	BY-PRODUCT RATE, EQUIVALENT TONS/YEAR 100% SULFURIC ACID	NET REVENUE, $/TON 100% SULFURIC ACID	TOTAL OP. COST INCLUDING REGULATED ROI FOR POWER COMPANY, $/YEAR	TOTAL NET SALES REVENUE, $/YEAR	NET ANNUAL INCREASE (DECREASE) IN COST OF POWER, $	CUMULATIVE NET INCREASE (DECREASE) IN COST OF POWER, $
1										
2										
3										
4										
5										
6	7000	31500000	5208300	14900	47600	22.50	17193000	1071000	16122000	16122000
7	7000	31500000	5208300	14900	47600	22.50	16906500	1071000	15835500	31957500
8	7000	31500000	5208300	14900	47600	22.50	16619900	1071000	15548900	47506400
9	7000	31500000	5208300	14900	47600	22.50	16333400	1071000	15262400	62768800
10	7000	31500000	5208300	14900	47600	22.50	16046800	1071000	14975800	77744600
11	5000	22500000	3720200	10600	34000	22.50	14145300	765000	13380300	91124900
12	5000	22500000	3720200	10600	34000	22.50	13858700	765000	13093700	104218600
13	5000	22500000	3720200	10600	34000	22.50	13572200	765000	12807200	117025800
14	5000	22500000	3720200	10600	34000	22.50	13285600	765000	12520600	129546400
15	5000	22500000	3720200	10600	34000	22.50	12999100	765000	12234100	141780500
16	3500	15750000	2604200	7400	23800	22.50	11433600	535500	10898100	152678600
17	3500	15750000	2604200	7400	23800	22.50	11147000	535500	10611500	163290100
18	3500	15750000	2604200	7400	23800	22.50	10860500	535500	10325000	173615100
19	3500	15750000	2604200	7400	23800	22.50	10573900	535500	10038400	183653500
20	3500	15750000	2604200	7400	23800	22.50	10287400	535500	9751900	193405400
21	1500	6750000	1116100	3200	10200	22.50	8115900	229500	7886400	201291800
22	1500	6750000	1116100	3200	10200	22.50	7829400	229500	7599900	208891700
23	1500	6750000	1116100	3200	10200	22.50	7542800	229500	7313300	216205000
24	1500	6750000	1116100	3200	10200	22.50	7256300	229500	7026800	223231800
25	1500	6750000	1116100	3200	10200	22.50	6969700	229500	6740200	229972000
26	1500	6750000	1116100	3200	10200	22.50	6683200	229500	6453700	236425700
27	1500	6750000	1116100	3200	10200	22.50	6396600	229500	6167100	242592800
28	1500	6750000	1116100	3200	10200	22.50	6110100	229500	5880600	248473400
29	1500	6750000	1116100	3200	10200	22.50	5823500	229500	5594000	254067400
30	1500	6750000	1116100	3200	10200	22.50	5537000	229500	5307500	259374900
TOT	92500	416250000	68824500	196500	629000		273527400	14152500	259374900	
LIFETIME AVERAGE INCREASE (DECREASE) IN UNIT OPERATING COST										
DOLLARS PER BARREL OF OIL BURNED							3.97	0.20	3.77	
MILLS PER KILOWATT-HOUR							5.91	0.30	5.61	
CENTS PER MILLION BTU HEAT INPUT							65.71	3.40	62.31	
DOLLARS PER TON OF SULFUR REMOVED							1392.00	72.03	1319.97	
PROCESS COST DISCOUNTED AT 11.2% TO INITIAL YEAR, DOLLARS							113119800	6546800	106573000	
LEVELIZED INCREASE (DECREASE) IN UNIT OPERATING COST EQUIVALENT TO DISCOUNTED PROCESS COST OVER LIFE OF POWER UNIT										
DOLLARS PER BARREL OF OIL BURNED							3.55	0.20	3.35	
MILLS PER KILOWATT-HOUR							5.29	0.31	4.98	
CENTS PER MILLION BTU HEAT INPUT							58.75	3.40	55.35	
DOLLARS PER TON OF SULFUR REMOVED							1244.44	72.02	1172.42	

TABLE A-123. MAGNESIA PROCESS

SUMMARY OF ESTIMATED CAPITAL INVESTMENT

(Variation from base case: wet scrubbing fly ash removal)

	Investment, $	% of total direct investment
Direct Investment		
Materials handling (conveyors, silos, bins, and feeders)	704,000	2.0
Feed preparation (mixer, tank, agitator, and pumps)	303,000	0.8
Gas handling (common feed plenum and booster fans, gas ducts and dampers from plenum to absorber, exhaust gas ducts and dampers from absorber to reheater and stack)	4,906,000	13.6
SO_2 absorption (four spray grid towers, including entrainment separators, tanks, agitators, and pumps)	5,447,000	15.1
Stack gas reheat (four indirect steam reheaters)	1,198,000	3.3
Fly ash removal (four scrubbers and entrainment separators, tanks, agitators, and pumps)	5,482,000	15.2
Slurry processing (centrifuge, conveyor, tank, agitator, and pumps)	1,110,000	3.1
Drying (dryer, conveyors, silos, fans, tanks, and pumps)	5,518,000	15.3
Calcining (calciner, cooler, bin, fans, conveyors, and silos)	2,243,000	6.2
Acid production (complete contact unit for sulfuric acid production)	6,000,000	16.6
Acid storage (storage and shipping facilities for 30-day production of sulfuric acid)	994,000	2.8
Subtotal	33,905,000	94.0
Services, utilities, and miscellaneous	2,034,000	5.6
Total process areas excluding pond construction	35,939,000	99.6
Incremental ash pond cost	154,000	0.4
Total direct investment	36,093,000	100.0
Indirect Investment		
Engineering design and supervision	1,881,000	5.2
Architect and engineering contractor	368,000	1.0
Construction expense	4,915,000	13.6
Contractor fees	1,465,000	4.1
Total indirect investment	8,629,000	23.9
Contingency	8,944,000	24.8
Total fixed investment	53,666,000	148.7
Other Capital Charges		
Allowance for startup and modifications	5,351,000	14.8
Interest during construction	6,440,000	17.8
Total depreciable investment	65,457,000	181.3
ESP cost credit	(9,614,000)	(26.6)
Net depreciable investment	55,843,000	154.7
Land	641,000	1.8
Working capital	1,610,000	4.5
Total capital investment	58,094,000	161.0
	($116/kW)	

Basis
Evaluation represents project beginning mid-1977, ending mid-1980. Average cost basis for scaling, mid-1979.
Stack gas reheat to 175°F by indirect steam reheat.
Minimum in-process storage; only pumps are spared.
Construction labor shortages with accompanying overtime pay incentive not considered.

TABLE A-124. MAGNESIA PROCESS

ANNUAL REVENUE REQUIREMENTS

(Variation from base case: wet scrubbing fly ash removal)

	Annual quantity	Unit cost, $	Total annual cost, $	% of average annual revenue requirements
Direct Costs				
Delivered raw materials				
MgO	1,470 tons	300.00/ton	441,000	2.53
Catalyst	1,800 liters	2.50/liter	4,500	0.03
Agricultural limestone	3,240 tons	15.00/ton	48,600	0.28
Total raw materials cost			494,100	2.84
Conversion costs				
Operating labor and supervision	47,500 man-hr	12.50/man-hr	593,800	3.41
Utilities				
Fuel oil	6,286,000 gal	0.40/gal	2,514,400	14.46
Steam	503,400 MBtu	2.00/MBtu	1,006,800	5.79
Process water	2,359,200 kgal	0.12/kgal	283,100	1.63
Electricity	93,084,000 kWh	0.029/kWh	2,699,400	15.52
Electricity credit (ESP)	7,115,000 kWh	0.029/kWh	(206,300)	(1.19)
Heat credit	135,600 MBtu	2.00/MBtu	(271,200)	(1.56)
Maintenance				
Labor and material			2,520,400	14.49
Analyses	8,860 man-hr	17.00/man-hr	150,600	0.87
Total conversion costs			9,291,000	53.42
Total direct costs			9,785,100	56.26
Indirect Costs				
Capital charges				
Depreciation, interim replacements, and insurance at 6.0% of net depreciable investment			3,350,600	19.26
Average cost of capital and taxes at 8.6% of total capital investment			4,996,100	28.72
Overheads				
Plant, 50% of conversion costs less utilities			1,632,400	9.39
Administrative, 10% of operating labor			59,400	0.34
Marketing, 10% of byproduct sales revenue			270,000	1.55
Total indirect costs			10,308,500	59.26
Gross average annual revenue requirements			20,093,600	115.52
Byproduct Sales Revenue				
100% sulfuric acid	108,000 tons	25.00/ton	(2,700,000)	(15.52)
Net annual revenue requirements			17,393,600	100.00

	Mills/kWh	$/ton coal burned	$/MBtu heat input	$/ton sulfur removed
Equivalent unit revenue requirements	4.97	11.59	0.55	501

Basis
- Midwest plant location, 1980 revenue requirements.
- Remaining life of power plant, 30 yr.
- Power unit on-stream time, 7,000 hr/yr.
- Coal burned, 1,500,100 tons/yr, 9,000 Btu/kWh.
- Stack gas reheat to 175°F.
- Sulfur removed, 34,750 short tons/yr.
- Total direct investment, $36,093,000; net depreciable investment, $55,843,000; and total capital investment, $58,094,000.
- All tons shown are 2,000 lb.

TECHNICAL REPORT DATA
(Please read Instructions on the reverse before completing)

1. REPORT NO.	2.	3. RECIPIENT'S ACCESSION NO.
EPA-600/7-80-001		

4. TITLE AND SUBTITLE	5. REPORT DATE
Definitive SOx Control Process Evaluations: Limestone, Lime, and Magnesia FGD Processes	January 1980
	6. PERFORMING ORGANIZATION CODE
7. AUTHOR(S)	8. PERFORMING ORGANIZATION REPORT NO.
K. D. Anderson, J. W. Barrier, W. E. O'Brien, and S. V. Tomlinson	ECDP-B7
9. PERFORMING ORGANIZATION NAME AND ADDRESS	10. PROGRAM ELEMENT NO.
TVA, Office of Power Emission Control Development Projects Muscle Shoals, Alabama 35660	INE624A
	11. CONTRACT/GRANT NO.
	EPA IAG-D9-E721-BI (TVA TV-41967A)
12. SPONSORING AGENCY NAME AND ADDRESS	13. TYPE OF REPORT AND PERIOD COVERED
EPA, Office of Research and Development Industrial Environmental Research Laboratory Research Triangle Park, NC 27711	Final; 6/78 - 9/79
	14. SPONSORING AGENCY CODE
	EPA/600/13

15. SUPPLEMENTARY NOTES IERL-RTP project officer is C. J. Chatlynne, Mail Drop 61, 919/541-2915.

16. ABSTRACT The report gives economic and ground-to-ground energy evaluations of limestone slurry, lime slurry, and magnesia (producing sulfuric acid) flue gas desulfurization (FGD) processes. The lime slurry process, using purchased lime and lime calcined onsite, remains lower in capital investment (90 $/kW for the base-case 500-MW power plant burning 3.5% sulfur coal) than the limestone slurry process (98 $/kW). The limestone slurry process remains lower in annual revenue requirements (4.02 mills/kWh) than the lime slurry process (4.25 mills/kWh). The magnesia process is about one-third higher in capital investment (132 $/kW) and one-fourth high in annual revenue requirements (5.05 mills/kWh including credit for acid sales) than the limestone slurry process, because of absorbent-recovery and acid-producing complexities. The lime slurry process using purchased lime is more economical than the limestone slurry process at low absorbent consumption rates (below about 200 MW or 2% sulfur coal). Onsite lime calcination becomes economical compared to purchased lime for larger power plants and higher coal sulfur levels (about 1000 MW with 3.5% sulfur coal, 750 MW with 5% sulfur coal). The limestone slurry process has the lowest overall (raw material, FGD, and disposal) energy requirements (26% less than lime and 30% less than magnesia).

17. KEY WORDS AND DOCUMENT ANALYSIS

a. DESCRIPTORS		b. IDENTIFIERS/OPEN ENDED TERMS	c. COSATI Field/Group	
Pollution	Magnesium Oxides	Pollution Control	13B	
Flue Gases	Slurries	Stationary Sources	21B	11G
Desulfurization	Scrubbers		07A, 07D	13I
Sulfur Oxides			07B	
Calcium Carbonates				
Calcium Oxides				

18. DISTRIBUTION STATEMENT	19. SECURITY CLASS (This Report)	21. NO. OF PAGES
Release to Public	Unclassified	325
	20. SECURITY CLASS (This page)	22. PRICE
	Unclassified	

EPA Form 2220-1 (9-73)