United States
Environmental Protection
Agency

Industrial Environmental Research
Laboratory
Research Triangle Park NC 27711

EPA-600/8-78-006
June 1978

Research and Development

EPA

User Guide

Fine Particle Emissions Information System

RESEARCH REPORTING SERIES

Research reports of the Office of Research and Development, U.S. Environmental Protection Agency, have been grouped into nine series. These nine broad categories were established to facilitate further development and application of environmental technology. Elimination of traditional grouping was consciously planned to foster technology transfer and a maximum interface in related fields. The nine series are:

1. Environmental Health Effects Research
2. Environmental Protection Technology
3. Ecological Research
4. Environmental Monitoring
5. Socioeconomic Environmental Studies
6. Scientific and Technical Assessment Reports (STAR)
7. Interagency Energy-Environment Research and Development
8. "Special" Reports
9. Miscellaneous Reports

This report has been assigned to the SPECIAL REPORTS series. This series is reserved for reports which are intended to meet the technical information needs of specifically targeted user groups. Reports in this series include Problem Oriented Reports, Research Application Reports, and Executive Summary Documents. Typical of these reports include state-of-the-art analyses, technology assessments, reports on the results of major research and development efforts, design manuals, and user manuals.

EPA REVIEW NOTICE

This report has been reviewed by the U.S. Environmental Protection Agency, and approved for publication. Approval does not signify that the contents necessarily reflect the views and policy of the Agency, nor does mention of trade names or commercial products constitute endorsement or recommendation for use.

This document is available to the public through the National Technical Information Service, Springfield, Virginia 22161.

EPA-600/8-78-006
June 1978

Fine Particle Emissions Information System User Guide

M.P. Schrag, Editor

Midwest Research Institute
425 Volker Boulevard
Kansas City, Missouri 64110

Contract No. 68-02-2641
Program Element No. EHE624A

EPA Project Officer: Gary L. Johnson

Industrial Environmental Research Laboratory
Office of Energy, Minerals, and Industry
Research Triangle Park, NC 27711

Prepared for

U.S. ENVIRONMENTAL PROTECTION AGENCY
Office of Research and Development
Washington, DC 20460

This page contains the publication and revision record of the FPEIS User Guide. The current revision status is indicated by the Schedule of Document Control. As the guide is updated, the date of the affected page(s) is changed to indicate the date of revision. Changes and additions to the guide are shown by vertical lines in the margins. A bar near the page number indicates new pagination rather than change of content. New pages are indicated by a dot near the page number.

SCHEDULE OF DOCUMENT CONTROL

Revision	Description
June 1976	Original printing.
June 1978	Reissue. This version entirely replaces and supercedes the previous edition.

PREFACE

The work was performed in the Environmental and Materials Sciences Division of Midwest Research Institute. Mr. M. P. Schrag, Deputy Director of the Division, served as program manager.

Contributing authors of this document included: Mr. Schrag, Dr. A. K. Rao, Mr. J. P. Reider, and Dr. R. F. Hegarty, all of Midwest Research Institute; Mr. G. S. McMahon, Mr. C. B. Maney, and Mr. F. N. Young, of MRI Systems, Inc.; and Mr. Gary L. Johnson, the EPA Project Officer.

CONTENTS

		Page
Preface		iv
List of Figures		vi
List of Tables		viii
Section 1	Introduction	UG-1.0-1
Section 2	Data Input Instructions	UG-2.0-1
Section 3	Off-Line Request Procedures	UG-3.0-1
Section 4	On-Line Request Procedures	UG-4.0-1
Section 5	Catalog of System Request Commands	UG-5.0-1
Section 6	Appendix	
	6.1 Standard FPEIS Data Input Forms	UG-6.1-1
	6.2 Example of FPEIS Series Report Output	UG-6.2-1
	6.3 FPEIS Data Base Structure	UG-6.3-1
	6.4 Key/Nonkey Data Elements	UG-6.4-1
	6.5 Summary of Contents of the FPEIS Data Base	UG-6.5-1

LIST OF FIGURES

Number	Title	Page
2.1-1	Typical Source/Collector Combination	UG-2.1-4
2.1-2	FPEIS Structure	UG-2.1-6
2.1-3	Sampling Log for 10 Runs	UG-2.1-10
2.1-4	Sample Completed Data Input Forms	UG-2.1-14
2.3-1	UTM Grid Zones in the Contiguous United States	UG-2.3-4
2.3-2	Sample Completed A-Cards--Source Description	UG-2.3-7
2.3-3	Sample Completed B-Cards--Test Series Remarks	UG-2.3-9
2.3-4	Sample Completed C01-C04 Cards--Control Device(s) Characteristics	UG-2.3-12
2.3-5	Sample Completed C05 Cards--Control Device(s) Design Parameters	UG-2.3-14
2.3-6	Sample Completed D01-D04 Cards--Test Characteristics	UG-2.3-19
2.3-7	Sample Completed D05 Cards--Control Device(s) Operating Parameters	UG-2.3-20
2.3-8	Sample Completed D06-D20 Cards--Subseries Remarks	UG-2.3-21
2.3-9	Sample Completed E-Cards--Particulate Mass Train Results	UG-2.3-23
2.3-10	Sample Completed F-Cards--Particulate Physical Properties	UG-2.3-25
2.3-11	Sample Completed H-Cards--Chemical Composition Data	UG-2.3-30
2.3-12	Sample Completed I-Cards--Measurement Particulars	UG-2.3-34
2.3-13	Sample Completed J-Cards--Particulate Size Distribution Data	UG-2.3-41

LIST OF FIGURES (Concluded)

Number	Title	Page
3.1-1	Sample FPEIS Data Submittal Acknowledgment Memo.	UG-3.1-4
3.1-2	Sample FPEIS Data Submittal Error Memo	UG-3.1-5
3.1-3	FPEIS Quality Assurance Program.	UG-3.1-6
4.1-1	Application Form for NCC Services.	UG-4.1-4
4.3-1	Request for Batch Terminal Support Form.	UG-4.3-3

LIST OF TABLES

Number	Title	Page
1.0-1	Conversion Factors	UG-1.0-3
2.1-1	FPEIS Data Elements and Their Levels	UG-2.1-7
2.1-2	The Data Input Form Structure	UG-2.1-13
2.1-3	Data Elements Requiring Standard Nomenclature	UG-2.1-46
2.1-4	Source Classification Codes	UG-2.1-47
2.1-5	Two-Letter State Abbreviations	UG-2.1-57
2.1-6	Control Device Description Nomenclature	UG-2.1-58
2.1-7	Device Category Key Words	UG-2.1-59
2.1-8	Design Specification Type	UG-2.1-60
2.1-9	Device Operating Parameter Type	UG-2.1-62
2.1-10	Chemical Entry Codes	UG-2.1-63
2.1-11	SAROAD Particulate Pollutant Codes	UG-2.1-64
2.1-12	List of Chemical Analysis Codes	UG-2.1-69
2.1-13	Standard Nomenclature for Measurement Equipment	UG-2.1-70
2.2-1	Abbreviations for Street Designators and for Words that Appear Frequently in Place Names	UG-2.2-5
4.2-1	Remote Interface Control Statements	UG-4.2-5
4.2-2	NCC Demand Access Telephone Numbers	UG-4.2-9
4.3-1	NCC Remote Batch Access Telephone Numbers	UG-4.3-5

1.0 Introduction

The Fine Particle Emissions Information System (FPEIS) is a computerized data system containing information on primary fine particle emissions to the atmosphere from stationary point sources and evaluations of control devices. The purpose of the system is to provide a centralized source of fine particle measurement information for use by engineers and scientists engaged in fine particle control technology development and in the environmental assessment of industrial processes.

Contents of the FPEIS may include source test data with particle size distributions; chemical, physical, and bioassay testing results from analyses of particulate samples; and design and performance data on any particle control system applied. Also included are process descriptions of the sources and descriptions of the sampling equipment and techniques employed. These data and information items are classified and arranged so as to enable users to correlate FPEIS data with information contained in other data bases. For this reason, the NEDS Source Classification Codes,[1/] the SOTDAT particulate chemical identification codes,[2/] and the Chemical Abstracts Services registration numbers[3/] are used in the FPEIS.

A uniform protocol for units and terminology has been developed along with standard data input forms and definitions of each data element for the system. The FPEIS uses metric units exclusively, although, for clarity, complete adherence to International System of Units (SI) protocol is not

1/ "Guide for Compiling a Comprehensive Emission Inventory," EPA No. APTD-1135, NTIS No. PB 212-231, March 1973.
2/ "SOTDAT Final Report," EPA No. 450/3-75-070, July 1975.
3/ "Chemical Abstracts - Chemical Substance Index," American Chemical Society.

maintained. A list of metric-to-English conversion factors is given in Table 1.0-1. These standards and definitions will allow all data in the system to be stored and retrieved on a common basis.

The FPEIS has been implemented at the EPA National Computer Center (NCC) at Research Triangle Park, on the UNIVAC 1110 computer using SYSTEM 2000®, a flexible data base management system. SYSTEM 2000, developed by MRI Systems, Inc., of Austin, Texas (no relation to Midwest Research Institute), will provide users with a virtually unlimited potential for data analysis. Features of SYSTEM 2000 include sorting, comparing, and retrieving information from the FPEIS in a variety of arrangements.

This document constitutes an extensive User Guide to the FPEIS. Detailed instructions for encoding FPEIS data sets are presented, along with a set of the standard FPEIS Data Input Forms. Both Off-Line and On-Line Request procedures for users are explained for direct computer request (for authorized National Computer Center accounts) or for written request to the EPA project officer. A catalog of pre-defined user request commands is presented with instructions for its use. The Appendix includes examples of input and output formats and lists of the structure and key data elements in the data base.

This User Guide is designed with discrete segments for major sections and subsections. As modifications or additions to the system are made, this User Guide will be updated as appropriate.

A companion FPEIS Reference Manual[4/] has been prepared which provides a general discussion of the FPEIS. It is suggested that users of the FPEIS read the Reference Manual prior to this document.

TABLE 1.0-1. CONVERSION FACTORS

Metric Units	Multiply by	To Obtain English Equivalent
kN/m^2	3.377	in. Hg (at 60°F)
°C	(C x 9/5) + 32	°F
cm^3	6.102×10^{-2}	in^3
cm^2	1.550×10^{-1}	in^2
joules	9.488×10^{-4}	Btu
kg/m^3	6.243×10^{-2}	lb/ft^3
km	6.214×10^{-1}	miles (statute)
kW	3.414×10^{3}	Btu/hr
m^3	3.531×10^{1}	ft^3
m^3/sec	3.531×10^{1}	ft^3/sec
m	3.281	ft
m/sec	3.281	ft/sec
mg	1.5432×10^{-2}	grains
m	3.937×10^{1}	in.
m^2	1.076×10^{1}	sq ft
tons (metric)	2.205×10^{3}	pounds
W	3.414	Btu/hr
cm	2.54	in.

4/ FPEIS Reference Manual, EPA-600/8-78-007, June 1978.

SECTION 2

DATA INPUT INSTRUCTIONS

CONTENTS

Number	Item	Page
List of Figures		**UG-2.0-3**
List of Tables		**UG-2.0-4**
2.0	Introduction	UG-2.0-5
2.1	Encoding Criteria	UG-2.1-1
2.1.1	Objectives and Scope of the FPEIS	UG-2.1-2
2.1.2	Data Element Grouping and Organization	UG-2.1-5
2.1.3	Designation Criteria for Test Series, Test Sub-series, and Test Run	UG-2.1-8
2.1.4	Data Input Form Structure	UG-2.1-11
2.1.5	Labor Saving Features	UG-2.1-26
2.1.6	Standard Nomenclature and Units	UG-2.1-32
2.1.7	Data Preparation	UG-2.1-44
2.1.8	Tables of Standard Nomenclature	UG-2.1-45
2.2	General Instructions for FPEIS Data Input Forms	UG-2.2-1
2.3	Encoding Instructions	UG-2.3-1
2.3.1	Section A - Source Description	UG-2.3-2
2.3.2	Section B - Test Series Remarks	UG-2.3-8
2.3.3	Section C - Control Device(s) Characteristics	UG-2.3-10

CONTENTS (Concluded)

Number	Item	Page
2.3.4	Section D - Test Characteristics	UG-2.3-15
2.3.5	Section E - Mass Train Results	UG-2.3-22
2.3.6	Section F - Particulate Physical Properties . . .	UG-2.3-24
2.3.7	Section G - Particulate Bioassay Data	UG-2.3-26
2.3.8	Section H - Chemical Composition Data	UG-2.3-27
2.3.9	Section I - Measurement Particulars	UG-2.3-31
2.3.10	Section J - Particulate Size Distribution Data .	UG-2.3-35

SECTION 2

LIST OF FIGURES

Number	Title	Page
2.1-1	Typical Source/Collector Combination	UG-2.1-4
2.1-2	FPEIS Structure	UG-2.1-6
2.1-3	Sampling Log for 10 Runs	UG-2.1-10
2.1-4	Sample Completed Data Input Forms	UG-2.1-14
2.3-1	UTM Grid Zones in the Contiguous United States .	UG-2.3-4
2.3-2	Sample Completed A-Cards--Source Description . .	UG-2.3-7
2.3-3	Sample Completed B-Cards--Test Series Remarks . .	UG-2.3-9
2.3-4	Sample Completed C01-C04 Cards--Control Device(s) Characteristics	UG-2.3-12
2.3-5	Sample Completed C05 Cards--Control Device(s) Design Parameters	UG-2.3-14
2.3-6	Sample Completed D01-D04 Cards--Test Characteristics	UG-2.3-19
2.3-7	Sample Completed D05 Cards--Control Device(s) Operating Parameters	UG-2.3-20
2.3-8	Sample Completed D06-D20 Cards--Subseries Remarks	UG-2.3-21
2.3-9	Sample Completed E-Cards--Particulate Mass Train Results	UG-2.3-23
2.3-10	Sample Completed F-Cards--Particulate Physical Properties	UG-2.3-25
2.3-11	Sample Completed H-Cards--Chemical Composition Data	UG-2.3-30
2.3-12	Sample Completed I-Cards--Measurement Particulars	UG-2.3-34
2.3-13	Sample Completed J-Cards--Particulate Size Distribution Data	UG-2.3-41

SECTION 2

LIST OF TABLES

Number	Item	Page
2.1-1	FPEIS Data Elements and Their Levels	UG-2.1-7
2.1-2	The Data Input Form Structure	UG-2.1-13
2.1-3	Data Elements Requiring Standard Nomenclature . .	UG-2.1-46
2.1-4	Source Classification Codes	UG-2.1-47
2.1-5	Two-Letter State Abbreviations	UG-2.1-57
2.1-6	Control Device Description Nomenclature	UG-2.1-58
2.1-7	Device Category Key Words	UG-2.1-59
2.1-8	Design Specification Type	UG-2.1-60
2.1-9	Device Operating Parameter Type	UG-2.1-62
2.1-10	Chemical Entry Codes.	UG-2.1-63
2.1-11	SAROAD Particulate Pollutant Codes	UG-2.1-64
2.1-12	List of Chemical Analysis Codes	UG-2.1-69
2.1-13	Standard Nomenclature for Measurement Equipment .	UG-2.1-70
2.2-1	Abbreviations for Street Designators and for Words that Appear Frequently in Place Names . . .	UG-2.2-5

2.0 Introduction

This section on data input instructions is divided into three principal subsections. The first subsection addresses the encoding criteria for the FPEIS; that is, why certain data must be encoded in a specific way. Data requiring the use of standard nomenclature are given along with tables of allowable entries for those data elements. The standard FPEIS Data Input Form is introduced and examples of encoding the form are given. The concept of the FPEIS data base structure of series, subseries, and run levels is discussed. To eliminate redundant data entry, several labor saving techniques have been developed to aid the user, and these techniques are discussed here.

The second subsection provides general instructions for using the FPEIS Data Input Forms which apply to all data collection activities.

The third subsection gives detailed, card-by-card encoding instructions for each Data Input Form.

2.1 Encoding Criteria

This section provides a general discussion of the encoding criteria for the FPEIS. An overview of the objectives and scope of the FPEIS, a description of the data element grouping and organization, and a discussion of all standard nomenclature and engineering units employed are included. Descriptions of the FPEIS Data Input Form structure with sample input, labor saving features, and miscellaneous data preparation are also given.

2.1.1 Objectives and Scope of the FPEIS

A typical source/collector combination is shown in Figure 2.1-1. Variations to the typical situation shown may include multiple processes with a common effluent stream, multiple control devices in series on an effluent stream, processes where all or only a part of the effluent is controlled, sampling which may be *in situ* or *ex situ*, sampling with or without sample modification, etc.

The Fine Particle Emissions Information System attempts to characterize the particulate pollutant (aerosol) at the inlet and/or outlet of a control system by providing data on all the factors affecting its generation, modification, sampling, measurement, and analysis. The FPEIS is designed to contain: (a) characteristics of sources; (b) characteristics of control devices; and (c) characteristics of particulates emitted by various source/collector combinations. The data base may also contain:

- Process and control system parameters
- Particulate mass train data
- Particulate physical, bioassay, and chemical properties
- Measurement instrument/method
- Particle size distribution data

The data base system is designed so that one can get information with respect to:

- A specific test
- A specific source
- A specific control device

- A specific measurement instrument or method
- All or a portion of the data

The FPEIS can accommodate partial data. The number of parameters measured in a test depends upon the objectives of the testing program. It is unlikely that any source tests will have all the data which the FPEIS is designed to contain, nor is the FPEIS intended to suggest or dictate the details of a test program. For example, in a given testing program, all the tests may be made at only the inlet or outlet, and the chemical analysis or bioassay may or may not be conducted. It is likely that some of the control device design and operating parameters may not be reported. Even if there are missing data, the available data will be of use and should be reported.

Data from sources or sites for which the company name, location, etc., are, or should remain, confidential can also be accommodated. Arrangements for such cases should be made with the FPEIS project officer (see Section 3.4). The encoding of data from confidential sources is discussed later in this section.

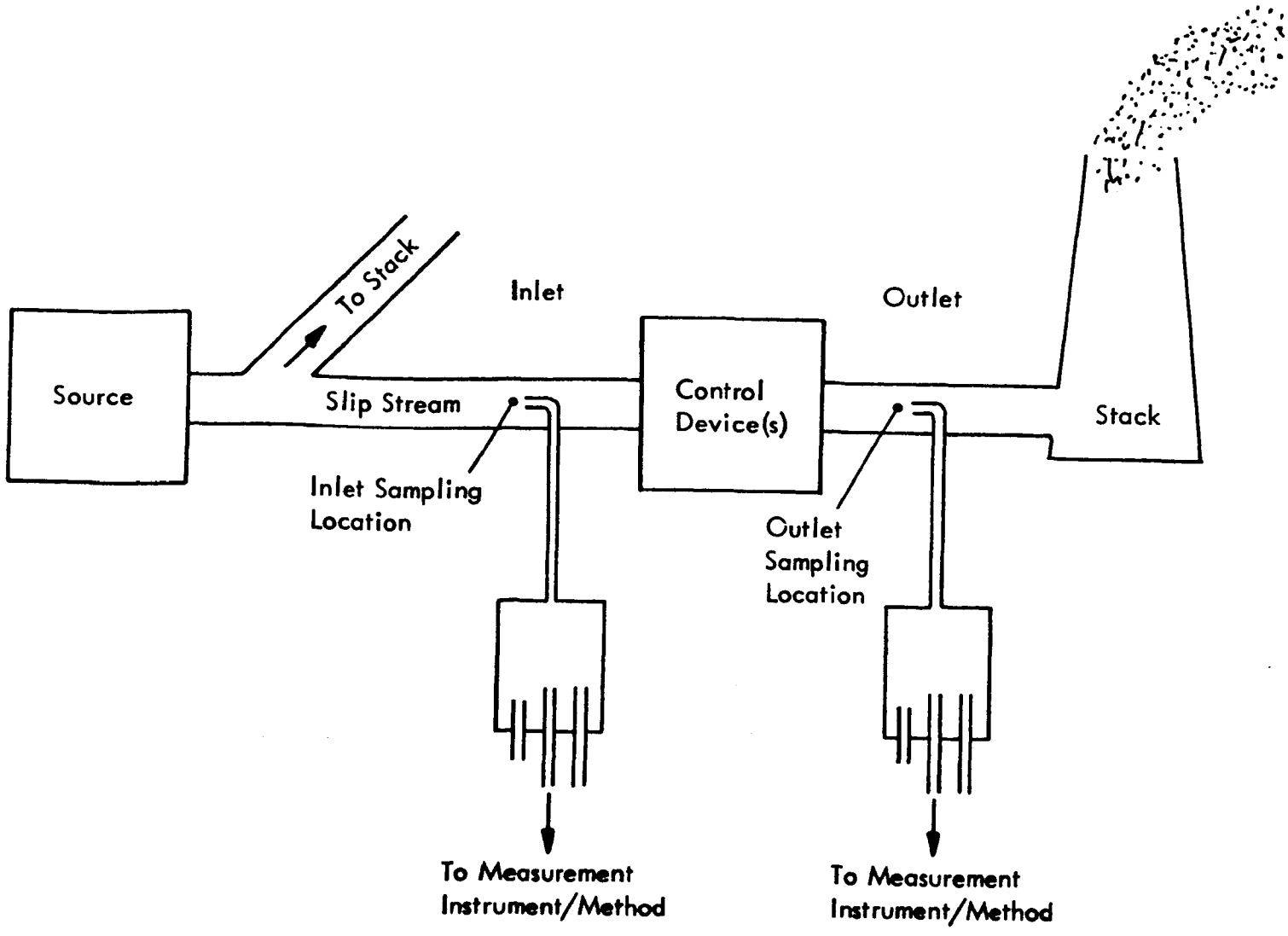

Figure 2.1-1. Typical Source/Collector Combination.

2.1.2 Data Element Grouping and Organization

Presentation of the information described in Section 2.1.1 requires several data elements or information items. The definitions, grouping, and organization of these data elements, as well as the description of the FPEIS system, are provided in detail in the FPEIS Reference Manual. From an organizational standpoint, the various data elements are grouped in one of three levels, the test series level, the subseries level, and the test run level. These levels are shown in Figure 2.1-2. In this figure, one can see that the FPEIS contains many test series, each of which contains one or more test subseries, which in turn consist of one or more test runs. The data which are contained at each level are shown in Table 2.1-1. A discussion of the meaning of these levels follows.

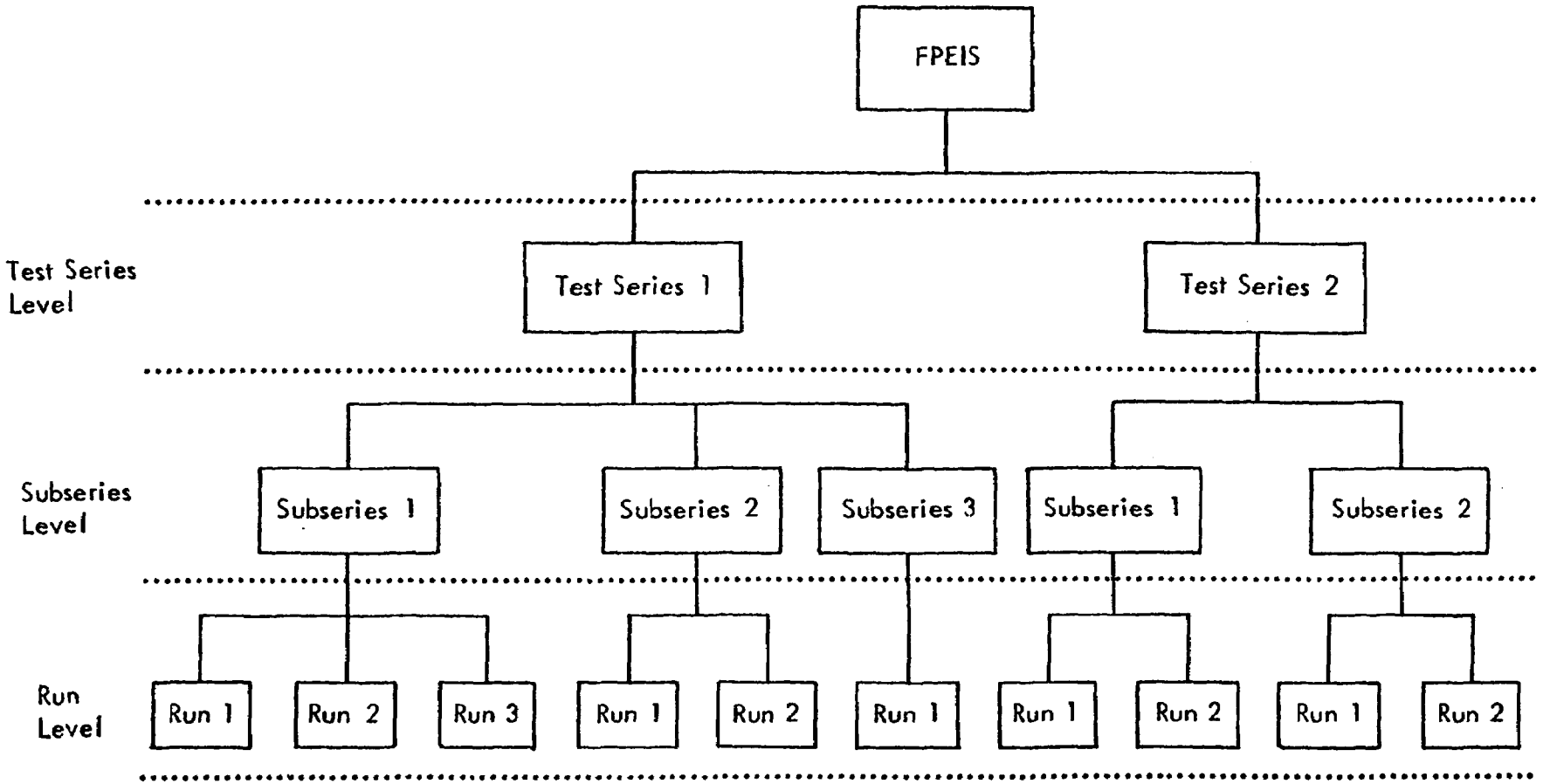

Figure 2.1-2. FPEIS Structure.

TABLE 2.1-1. FPEIS DATA ELEMENTS AND THEIR LEVELS

Test Series Level

A. Source Characteristics
- Source category (SCC I)
- Type of operation (SCC II)
- Feed material class (SCC III)
- Operating mode class (SCC IV)
- Site and source name
- Source address (street, city, state, zip code)
- UTM zone location and coordinates
- Test series start and finish date
- Tested by and reference

B. Test Series Remarks

C. Control Device(s) Characteristics
- Generic device type
- Device class and category
- Device commercial name
- Manufacturer
- Description
- Design parameter type and value

Subseries Level

D. Test Characteristics
- Test date, start, and finish time
- Source operating mode
- Source operating rate
- Percent design capacity
- Feed material and its composition
- Sampling location and its description
- Volume flow rate, velocity, temperature, and pressure
- Moisture content
- Percent isokinetic sampling
- Gas analysis and trace gas composition (Orsat, Fyrite, etc.)
- Control Device(s) Operating Parameter and Value Remarks
- Subseries Remarks

E. Particulate Mass Train Results
- Front half and total mass concentration
- Mass train comments

F. Particulate Physical Properties
- Density
- Resistivity
- Others

G. Bioassay Data
- (Space reserved for future use)

H. Chemical Composition
- Particle boundary diameters
- Sizing instrument calibrated or calculated
- Chemical entry code
- Chemical and analysis method ID
- Concentration in filter/total
- Concentration in Ranges 1 through 8

Run Level

I. Measurement Particulars
- Measurement instrument/method name
- Size range lower and upper boundary
- Collection surface
- Dilution factor
- Measurement start time and period
- Sample flow rate
- Sample temperature, pressure, and moisture content
- Comments

J. Particulate Size Distribution
- Particle diameter basis (Stokes, aerodynamic, or impaction)
- Boundary diameter
- Concentration basis (mass or number)
- Concentration

2.1.3 Designation Criteria for Test Series, Test Subseries, and Test Run

The designation of test series, subseries, and run is illustrated in the following example.

The sampling log of a hypothetical coal-fired boiler test is shown in Figure 2.1-3. In this test, a Brink impactor was used at the inlet and an Andersen impactor, optical particle counter, and a diffusion battery/CNC combination were used at the outlet for making particle size distribution measurements. The boiler load was 120 MW in the morning, and 140 MW in the afternoon. The control device operation was steady throughout the day. In the morning, two runs were made with the Brink impactor, one with the Andersen impactor, one with the optical particle counter, and one with the diffusion battery/CNC. A similar number of runs were made in the afternoon.

The designation of test series, test subseries, and test run is as follows. Each individual measurement is designated as a test run--the whole set of runs a test series. The group of consecutive runs taken at either the inlet or the outlet of the control device, on a given test date, during the time in which the source/control device operation has been reasonably steady, is designated as a test subseries. The premise behind the subseries designation is that the properties of the effluent stream remain relatively constant as long as the source and control device operations remain steady. Multiple instruments then can be used to cover the wide range of particle sizes, or multiple runs can be made with a given instrument. In the example described above (see Figure 2.1-3), the two Brink impactor runs made at

the inlet in the morning are designated as a subseries. The measurements made at the outlet with the Andersen sampler, the optical particle counter, and the diffusion battery/condensation nuclei counter in the morning are designated as another subseries. Similarly, the remaining runs are grouped into other subseries.

It should be noted that the designation of test series and subseries discussed here are merely guidelines. In most cases, the first criterion for designating a subseries has been whether the sampling was done at the inlet or outlet of a control device. Additional criteria may be applied to delineate among changes in process operating conditions or control system operating conditions.

In general, the test series designates the sampling activities performed at a single site over a specified period of time (usually continuous) with a specific control system employed. It is possible, however, that certain tests may involve changes to the process or control system which makes the use of multiple test series more appropriate. This is entirely at the discretion of the encoder. If any questions arise regarding the designation of a test series or test subseries, the encoder should contact the FPEIS project officer.

Inlet					Outlet				
			FPEIS Designation					FPEIS Designation	
Start Time	Stop Time	Instrument	Subseries	Run	Start Time	Stop Time	Instrument	Subseries	Run
0830	0845	Brink Impactor	1	1					
					0840	0900	Andersen Impactor	2	1
					0940	0941	Optical Particle Counter	2	2
1030	1050	Brink Impactor	1	2					
					1040	1100	Diffusion Battery/ CNC	2	3
					1200	1220	Andersen Impactor	4	1
1215	1230	Brink Impactor	3	1					
					1230	1231	Optical Particle Counter	4	2
1300	1315	Brink Impactor	3	2					
					1315	1335	Diffusion Battery/ CNC	4	3

Figure 2.1-3. Sampling Log for 10 Runs.

2.1.4 Data Input Form Structure

The arrangement of data element groups on various levels within the data base is shown in Table 2.1-1. These data elements are entered on seven data input forms. The layout of the seven forms is such that the data elements least likely to change are on Form Nos. 1 and 2, and the most likely to change are on Form No. 6; that is, the data input forms follow the same hierarchical arrangement as shown in Figure 2.1-2.

The source description group, which includes the name of the source testing contractor and test report reference and the test series remarks, are contained on Form No. 1, and control device(s) description and design parameters are contained on Form No. 2. The data on Form Nos. 1 and 2 are at test series level and do not change for a given set of tests on a given source/collector combination.

Test characteristics (source and control device(s) operating parameters, and particulate physical and chemical analyses results) are on Form Nos. 3 through 5b. These data are at the subseries level and represent test runs performed for certain continuous time intervals on a source/control device(s) combination operating at certain operating conditions, or at a given location.

The measurement particulars and the particle size distribution data are contained on Form No. 6. These data are at the test run level. Because more than one instrument or method may be used to make the size distribution measurement, Form No. 6 is expected to be the most frequently used.

Coding of several runs and subseries of a test series will be clear by observing the data input form structure for test series described in Section 2.1.3. The data input form structure for the first two subseries of the example test is shown in Table 2.1-2. Notice that only forms that are needed are used. Figure 2.1-4 shows all the completed forms.

TABLE 2.1-2. THE DATA INPUT FORM STRUCTURE

Data Input Form No.	Data Coded
1	Test Series - Source description and test series remarks
2	Control device description and design parameters.
3	Subseries 1 - Test characteristics, control device operating parameters, mass train results, particle physical properties.
4	
5b	Chemical analysis results. Form No. 5a was not used since there were no biological data.
6	Subseries 1, Run 1 (Brink impactor data).
6	Subseries 1, Run 2 (Brink impactor data).
3	Subseries 2 - Test characteristics, mass train results.
4	
	Form Nos. 5a and 5b are not used as there were no biological or chemical composition data.
6	Subseries 2, Run 1 (Andersen sampler).
6	Subseries 2, Run 2 (Optical particle counter).
6	Subseries 2, Run 3 (Diffusion battery/condensation nuclei counter.

FPEIS

U.S. ENVIRONMENTAL PROTECTION AGENCY
IERL-RTP, Research Triangle Park, N.C. 27711

FINE PARTICLE EMISSIONS INFORMATION SYSTEM
DATA INPUT FORMS

Form 1 9/77

Form Completed by

A - SOURCE DESCRIPTION

Test Series No.	Card No.	SCC I (Source Category)	SCC II (Type of Operation)	SCC III (Feed Material Class)	Test Series Start Date Mo	Da	Yr	Finish Date Mo	Da	Yr	UTM Zone
19	A01	EXTCØMB BØILER	ELECTRIC GENERATN	SØLID WASTE/CØAL	12	04	73	12	14	73	15

Card No.	SCC IV (Operating Mode Class)	Site Name
A02	>100MMBTU/HR	MERAMEC PLANT

Card No.	Source Name	Street	City	State
A03	BØILER UNIT 1	8200 FIVE RØAD	ST. LØUIS	MØ

Card No.	Zip	UTM Coords X	UTM Coords Y	Tested By
A04	63120	7250	4750	MIDWEST RESEARCH INST., KANSAS CITY, MØ

Card No.	Reference
A05	SHANNØN, L.J., ET AL., EPA-650/2-74-073, AUG. 74

B - TEST SERIES REMARKS

Test Series No.	Card No.	Remarks in Text
	B01	IMPACTØR CUT PØINTS CØMPUTED FRØM RANZ AND WØNG THEØRY
	B02	
	B03	
	B04	
	B05	
	B06	
	B07	
	B08	
	B09	
	B10	

EPA(RTP)412
(Page 1 of 6)

Figure 2.1-4. Sample Completed Data Input Forms.

FPEIS

U.S. ENVIRONMENTAL PROTECTION AGENCY
IERL-RTP, Research Triangle Park, N.C. 27711

FINE PARTICLE EMISSIONS INFORMATION SYSTEM
DATA INPUT FORMS

Form 2 9/77

Form Completed by

C - CONTROL DEVICE(S) CHARACTERISTICS

Test Series No.	Card No.	Device No. (1,2 or 3)	Device Category	Device Class	Generic Type
19	C01	1	PARALLEL PLATE ESP	CØNVENTIØNAL	ESP

Card No.	Commercial Name	Manufacturer
C02	ELECTRØSTATIC PRECIPITATØR	RESEARCH COTTRELL

Card No.	Device Description
C03	2-UNITS IN PARALLEL WITH CØMMØN INLET DUCT AND SEPARATE ØUT-

Card No.	Device Description (continued)
C04	LET DUCTS.

CONTROL DEVICE(S) DESIGN PARAMETERS

Test Series No.	Card No.	Device No. (1,2 or 3)	Serial No.	Specifications	Value
19	C05	1	1	ELECTRØDE AREA	5174.5 M2
	C05	1	2	CØRØNA WIRE DIA	2.8 MM
	C05	1	3	PLATE TØ PLATE SPACING	238 MM
	C05				
	C05				
	C05				
	C05				
	C05				
	C05				
	C05				
	C05				
	C05				
	C05				
	C05				
	C05				
	C05				
	C05				
	C05				
	C05				

EPA(F.TP)412
(Page 2 of 6)

Figure 2.1-4. (Continued)

FPEIS

U.S. ENVIRONMENTAL PROTECTION AGENCY
IERL-RTP, Research Triangle Park, N.C. 27711

FINE PARTICLE EMISSIONS INFORMATION SYSTEM
DATA INPUT FORMS

Form 3 9/77

Form Completed by

D - TEST CHARACTERISTICS

Test Series No.	Sub-series No.	Card No.	Control Device Inlet or Outlet (I or Ø)	Test Subseries	Date Mo	Date Da	Date Yr	Start Time	Stop Time	Source Operating Mode	Source Operating Rate*	% Design Capacity*
19	1	D01	I	1	2	04	73	0830	1100	CØAL+REFUSE BURNING	120 MW	100

Card No.	Feed Material*	Feed Material Composition*
D02	ØRIENT 6 CØAL AND MUN. REFUSE	9% REFUSE

Card No.	Sampling Location Description*	Volume Flow Rate*	Velocity*	Temp.*	Press.*	% H_2O*	% Iso-kinetic*
D03	ABØUT 2M FRØM BEND (RAD. ØF CURV. = 2.3M)	169	204	164	760	8	100

Card No.	CO_2*	CO*	O_2*	N_2*	Trace Gases in ppm (Text)*
D04	14	0	6	79	SØ2=900, SØ3=0, NØ-220

CONTROL DEVICE(S) OPERATING PARAMETERS

Test Series No.	Sub-series No.	Card No.	Serial No.	Device No. (1,2 or 3)	Specification*	Value*
19	1	D05	1	1	VØLUMETRIC FLØW RATE	230.1 M3/S
		D05	1	2	APPLIED VØLTAGE	32 KV
		D05	1	3	CØRØNA CURRENT	253 MAMP
		D05	1	4	POWER	8 KW
		D05	1	5	SPARK RATE	115/MIN
		D05				
		D05				
		D05				
		D05				
		D05				
		D05				
		D05				
		D05				
		D05				
		D05				
		D05				
		D05				
		D05				
		D05				
		D05				

*Need not be filled if the preceding subseries contains the same data; changes or modifications should be entered as necessary. If data or information from preceding subseries is not applicable, use NA or 999; for subseries following use of NA or 999 where data or information is available it must be entered.

EPA(RTP)412
(Page 3 of 6)

Figure 2.1-4. (Continued)

FPEIS

U.S. ENVIRONMENTAL PROTECTION AGENCY
IERL-RTP, Research Triangle Park, N.C. 27711

FINE PARTICLE EMISSIONS INFORMATION SYSTEM
DATA INPUT FORMS

Form 4 9/77
Form Completed by

CONTROL DEVICE(S) OPERATING PARAMETERS (cont'd)

Test Series No.	Sub-series No.	Card No.	Serial No.	Device No. (1,2 or 3) Specification *	Value *
		D05			
		D05			
		D05			
		D05			
		D05			
		D05			
		D05			
		D05			
		D05			
		D05			

SUBSERIES REMARKS

Test Series No.	Sub-series No.	Card No.	Remarks in Text*
		D06	
		D07	
		D08	
		D09	
		D10	
		D11	
		D12	
		D13	
		D14	
		D15	
		D16	
		D17	
		D18	
		D19	
		D20	

E - PARTICULATE MASS TRAIN RESULTS

Test Series No.	Sub-series No.	Card No.	Front Half	Total	Mass Train Comments (Text)
19	1	E01	5.210E+05	4.780E+06	EPA METHOD 5 TRAIN

F - PARTICULATE PHYSICAL PROPERTIES

Test Series No.	Sub-series No.	Card No.	Density *	Determination Resistivity*	Other Physical Properties in Text
19	1	F01	2270	.30+110	

*Need not be filled if the preceding subseries contains the same data; changes or modifications should be entered as necessary. If data or information from preceding subseries is not applicable, use NA or 999; for subseries following use of NA or 999 where data or information is available it must be entered.

EPA(RTP)412
(Page 4 of 8)

Figure 2.1-4. (Continued)

FPEIS

U.S. ENVIRONMENTAL PROTECTION AGENCY
IERL-RTP, Research Triangle Park, N.C. 27711

FINE PARTICLE EMISSIONS INFORMATION SYSTEM
DATA INPUT FORMS

Form 5b 2/78

Form Completed by

H - CHEMICAL COMPOSITION

Stokes/Aerodynamic/Impaction Diameter (0, 1, or 2)
Calib or Calc (1 or 0)

Test Series No.	Sub-series No.	Card No.	Upper Boundary Diameter	Particle Boundary Diameter * ①	②	③	④	⑤	⑥	⑦	⑧
19	1	H01	10 15.	7.5	3.8	2.3	1.5	.78	.41	.1	.

Entry Code — Analysis I.D.

Chemical Concentration ($\mu g/m^3$)

Card No.	Chemical I.D.	Mass Train Filter or Pooled Stages	① ±	② ±	③ ±	④ ±	⑤ ±	⑥ ±	⑦ ±	⑧ ±
H02	S2105	A 2.10+14	.60+07	.60+04	.10+04	.70+01	.79+04	.81+0	.	.
H02	S2110	A 1.80+24	.00+11	.43+28	.00+11	.10+22	.22+12	.83+1	.	.
H02	S2112	A 1.21+32	.19+23	.99+29	.40+22	.67+32	.24+28	.63+1	.	.
H02	S2113	A 9.20+12	.2 +12	.5 +12	.40+14	.98+13	.70+03	.30+0	.	.
H02	S2114	A 2.40+21	.28+22	.27+21	.32+24	.90+21	.32+21	.68+2	.	.
H02	S2128	A 4.26+11	.26+11	.35+12	.57+11	.01+19	.14-15	.06-1	.	.
H02	S2132	A 5.66+21	.30+22	.39+21	.65+24	.95+23	.25+13	.43+1	.	.
H02	S2136	A 1.43+34	.00+27	.31+26	.00+22	.16+33	.43+16	.87+1	.	.
H02	S2171	A 1.10+11	.90+01	.90+02	.60+05	.54+05	.64-12	.04+0	.	.
H02	S2173	A 3.80+01	.00+01	.20+01	.80+04	.10+01	.38+02	.71+0	.	.
H02	S2160	A 1.30+18	.10+06	.60+03	.70+09	.00+02	.30+01	.63+0	.	.
H02	S2164	A 1.43+34	.14+27	.13+25	.16+26	.46+27	.71+19	.79+1	.	.
H02	S2167	A 1.35+36	.89+29	.66+26	.80+22	.32+32	.29+22	.03+2	.	.
H02	S2111	A 7.30+41	.68+42	.94+41	.68+46	.71+44	.20+36	.90+3	.	.
H02	S2126	A 4.26+51	.26+51	.35+52	.57+51	.05+59	.19+35	.06+3	.	.
H02			.	.	.	.	.	.	.	.
H02			.	.	.	.	.	.	.	.
H02			.	.	.	.	.	.	.	.
H02			.	.	.	.	.	.	.	.
H02			.	.	.	.	.	.	.	.
H02			.	.	.	.	.	.	.	.
H02			.	.	.	.	.	.	.	.
H02			.	.	.	.	.	.	.	.
H02			.	.	.	.	.	.	.	.
H02			.	.	.	.	.	.	.	.
H02			.	.	.	.	.	.	.	.
H02			.	.	.	.	.	.	.	.
H02			.	.	.	.	.	.	.	.
H02			.	.	.	.	.	.	.	.
H02			.	.	.	.	.	.	.	.
H02			.	.	.	.	.	.	.	.
H02			.	.	.	.	.	.	.	.
H02			.	.	.	.	.	.	.	.
H02			.	.	.	.	.	.	.	.

*Need not be filled if the preceding subseries contains the same data; changes or modifications should be entered as necessary. If data or information from preceding subseries is not applicable, use NA or 999; for subseries following use of NA or 999 where data or information is available it must be entered.

EPA(RTP)412

Figure 2.1-4. (Continued)

FPEIS

U.S. ENVIRONMENTAL PROTECTION AGENCY
IERL-RTP, Research Triangle Park, N.C. 27711

FINE PARTICLE EMISSIONS INFORMATION SYSTEM
DATA INPUT FORMS

Form 6 9/77

Form Completed by

I - MEASUREMENT PARTICULARS

Test Series No.	Sub-series No.	Run No.	Card No.	Measurement Instrument/Method No. / Measurement Instrument/Method Name**	Meas. Start Time	Sampling Period**	Aerosol Flow Rate**	Gas Conditions at Measurement Location** Temp.	Press.	% H_2O	Dilution Factor**
19	1	1	I01	BRINK BMS-111 IMPACTOR	0830	15	187	164	760	97	1

Card No.	Measurement Size Range** Lower	Upper	Collection Surface/Substrate and its Specifications**
I02	1	15	STAINLESS STEEL

Card No.	Comments on the Measurement**
I03	
I04	
I05	

J - PARTICULATE SIZE DISTRIBUTION DATA

Test Series No.	Sub-series No.	Run No.	Card No.	Measurement Instrument/Method No.	Stokes/Aerodynamic/Impaction Diameter (0, 1, or 2)	Particle Size Data**	Calib or Calc (1 or 0)
19	1	1	J01	1	15.	7.5	3.807	2.299	1.545	.79	.409	1	0
			J02		.	.	.	.	.	.	.	.	
			J03		.	.	.	.	.	.	.	.	

Card No.	Measurement Instrument/Method No.	Mass/No. (1 or 0)	Mass/No. Data ±	±	±	±	±	±	±	±
J04	1	1	3.00+05	1.13+05	9.34+04	4.56+04	2.78+04	8.20+03	1.85+04	.	.
J05			.	.	.	.	.	.	.	.	.
J06			.	.	.	.	.	.	.	.	.

**Need not be filled if the preceding subseries or run with this instrument/method contains the same data; changes or modifications should be entered as necessary. If data or information from preceding subseries or run is not applicable, use NA or 999; for subseries or run following use of NA or 999 where data or information is available it must be entered.

EPA(RTP)412
(Page 6 of 6)

Figure 2.1-4. (Continued)

FPEIS

U.S. ENVIRONMENTAL PROTECTION AGENCY
IERL-RTP, Research Triangle Park, N.C. 27711

FINE PARTICLE EMISSIONS INFORMATION SYSTEM
DATA INPUT FORMS

Form 6 9/77

Form Completed by

I - MEASUREMENT PARTICULARS

Test Series No.	Sub-series No.	Run No.	Card No.	Measurement Instrument/Method No. / Measurement Instrument/Method Name**	Meas. Start Time	Sampling Period**	Aerosol Flow Rate**	Gas Conditions at Measurement Location** Temp.	Press.	% H_2O	Dilution Factor**
19	1	2	I01		1030	20		158		9	

Card No.	Measurement Size Range** Lower	Upper	Collection Surface/Substrate and its Specifications**
I02			

Card No.	Comments on the Measurement**
I03	
I04	
I05	

J - PARTICULATE SIZE DISTRIBUTION DATA

Test Series No.	Sub-series No.	Run No.	Card No.	Measurement Instrument/Method No. / Stokes/Aerodynamic/Impaction Diameter (0, 1, or 2)	Particle Size Data**	Calib or Calc (1 or 0)
19	1	2	J01	• • •

FPEIS

U.S. ENVIRONMENTAL PROTECTION AGENCY
IERL-RTP, Research Triangle Park, N.C. 27711

FINE PARTICLE EMISSIONS INFORMATION SYSTEM
DATA INPUT FORMS

Form 3 9/77

Form Completed by

D - TEST CHARACTERISTICS

Test Series No.	Sub-series No.	Card No.	Control Device Inlet or Outlet (I or Ø)	Test Subseries Date Mo	Da	Yr	Start Time	Stop Time	Source Operating Mode	Source Operating Rate*	% Design Capacity*
19	2	D01	Ø	12	04	73	0840	1100			

Card No.	Feed Material*	Feed Material Composition*
D02		

Card No.	Sampling Location Description*	Volume Flow Rate*	Velocity*	Temp.*	Press.*	% H_2O*	% Iso-kinetic*
D03	SAMPLING PØRTS IMMEDIATELY BEHIND AN ELB	1417	157	166			

Card No.	CO_2*	CO*	O_2*	N_2*	Trace Gases in ppm (Text)*
D04					

CONTROL DEVICE(S) OPERATING PARAMETERS

Test Series No.	Sub-series No.	Card No.	Serial No.	Device No. (1,2 or 3)	Specification*	Value*
19	2	D05	1	5		108/MIN
		D05				
		D05				
		D05				
		D05				
		D05				
		D05				
		D05				
		D05				
		D05				
		D05				
		D05				
		D05				
		D05				
		D05				
		D05				
		D05				
		D05				
		D05				
		D05				
		D05				

*Need not be filled if the preceding subseries contains the same data; changes or modifications should be entered as necessary. If data or information from preceding subseries is not applicable, use NA or 999; for subseries following use of NA or 999 where data or information is available it must be entered.

EPA(RTP)412
(Page 3 of 8)

Figure 2.1-4. (Continued)

FPEIS

U.S. ENVIRONMENTAL PROTECTION AGENCY
HERL-RTP, Research Triangle Park, N.C. 27711

FINE PARTICLE EMISSIONS INFORMATION SYSTEM
DATA INPUT FORMS

Form 4 9/77

Form Completed by

CONTROL DEVICE(S) OPERATING PARAMETERS (cont'd)

Test Series No.	Subseries No.	Card No.	Serial No.	Device No. (1, 2 or 3)	Specification*	Value*
		D05				
		D05				
		D05				
		D05				
		D05				
		D05				
		D05				
		D05				
		D05				
		D05				

SUBSERIES REMARKS

Test Series No.	Subseries No.	Card No.	Remarks in Text*
		D06	
		D07	
		D08	
		D09	
		D10	
		D11	
		D12	
		D13	
		D14	
		D15	
		D16	
		D17	
		D18	
		D19	
		D20	

E - PARTICULATE MASS TRAIN RESULTS

Test Series No.	Subseries No.	Card No.	Front Half	Total	Mass Train Comments (Text)
19	2	E01	1.390E+04	2.067E+05	

F - PARTICULATE PHYSICAL PROPERTIES

Test Series No.	Subseries No.	Card No.	Density*	Determination: Resistivity*	Other Physical Properties in Text
19	2	F01		2.410+110	

*Need not be filled if the preceding subseries contains the same data; changes or modifications should be entered as necessary. If data or information from preceding subseries is not applicable, use NA or 999; for subseries following use of NA or 999 where data or information is available it must be entered.

EPA(RTP)612
(Page 4 of 6)

Figure 2.1-4. (Continued)

FPEIS

U.S. ENVIRONMENTAL PROTECTION AGENCY
IERL-RTP, Research Triangle Park, N.C. 27711

FINE PARTICLE EMISSIONS INFORMATION SYSTEM
DATA INPUT FORMS

Form 6 9/77

Form Completed by

I - MEASUREMENT PARTICULARS

Test Series No.	Sub-series No.	Run No.	Card No.	Measurement Instrument/Method No. / Measurement Instrument/Method Name**	Meas. Start Time	Sampling Period **	Aerosol Flow Rate**	Gas Conditions at Measurement Location** Temp.	Press.	% H_2O	Dilution Factor**
19	2	1	102	ANDERSON MODEL IV IMPACTOR	0840	20	20.2	166	760	8.5	1

Card No.	Measurement Size Range** Lower	Upper	Collection Surface/Substrate and its Specifications**
102	1	15	GLASS FIBER FILTER

Card No.	Comments on the Measurement**
103	IMPACTOR OPERATED HORIZONTALLY
104	
105	

J - PARTICULATE SIZE DISTRIBUTION DATA

Test Series No.	Sub-series No.	Run No.	Card No.	Measurement Instrument/Method No. / Stokes/Aerodynamic/Impaction Diameter (0, 1, or 2)	Particle Size Data**	Calib or Calc (1 or 0)
19	2	1	J01	21	15.0 11.5 7.18 4.86 3.31 2.12 1.06 .65	0
			J02		.44 .1	
			J03			

Card No.	Measurement Instrument/Method No. / Mass/No. (1 or 0)	Mass/No. Data
J04	21	1.48+04 1.39+04 1.58+04 9.10+03 1.43+04 1.51+04 4.25+03 2.40+03
J05		4.75+03
J06		

**Need not be filled if the preceding subseries or run with this instrument/method contains the same data; changes or modifications should be entered as necessary. If data or information from preceding subseries or run is not applicable, use NA or 999; for subseries or run following use of NA or 999 where data or information is available it must be entered.

EPA(RTP)412
(Page 6 of 6)

Figure 2.1-4. (Continued)

FPEIS

U.S. ENVIRONMENTAL PROTECTION AGENCY
IERL-RTP, Research Triangle Park, N.C. 27711

FINE PARTICLE EMISSIONS INFORMATION SYSTEM
DATA INPUT FORMS

Form 6 9/77

Form Completed by

I - MEASUREMENT PARTICULARS

Test Series No.	Sub-series No.	Run No.	Card No.	Measurement Instrument/Method No. / Measurement Instrument/Method Name**	Meas. Start Time	Sampling Period **	Aerosol Flow Rate**	Gas Conditions at Measurement Location** Temp.	Press.	% H_2O	Dilution Factor**
19	2	2	I013	CLIMET MODEL - OPC	0930	1	708	25	760	12	1

Card No.	Measurement Size Range** Lower	Upper	Collection Surface/Substrate and its Specifications **
I02	65	15	

Card No.	Comments on the Measurement **
I03	PARTICLE DIA. ARE EQUIVALENT STOKES DIA. DETERMINED FROM SEDIMEN-
I04	TATION VELOCITIES
I05	

J - PARTICULATE SIZE DISTRIBUTION DATA

Test Series No.	Sub-series No.	Run No.	Card No.	Measurement Instrument/Method No. / Stokes/Aerodynamic/Impaction Diameter (0, 1, or 2)	Particle Size Data**	Calib or Calc (1 or 0)
19	2	2	J013	0	1.5 1.03 .85 .65	
			J02			
			J03			

Card No.	Measurement Instrument/Method No. / Mass/No. (1 or 0)	Mass/No. Data
J043	0	2.76+02 4.00+03 1.08+04
J05		
J06		

**Need not be filled if the preceding subseries or run with this instrument/method contains the same data; changes or modifications should be entered as necessary. If data or information from preceding subseries or run is not applicable, use NA or 999; for subseries or run following use of NA or 999 where data or information is available it must be entered.

EPA(RTP)412
(Page 6 of 8)

Figure 2.1-4. (Continued)

FPEIS

U.S. ENVIRONMENTAL PROTECTION AGENCY
IERL-RTP, Research Triangle Park, N.C. 27711

FINE PARTICLE EMISSIONS INFORMATION SYSTEM
DATA INPUT FORMS

Form 6 9/77

Form Completed by

I - MEASUREMENT PARTICULARS

Test Series No.	Sub-series No.	Run No.	Card No.	Measurement Instrument/Method No. / Measurement Instrument/Method Name**	Meas. Start Time	Sampling Period**	Aerosol Flow Rate**	Gas Conditions at Measurement Location** Temp.	Press.	%H2O	Dilution Factor**
19	2	3	I 0 1	4 CNC/DIFFUSION BATTERY	1040						1

Card No.	Measurement Size Range** Lower	Upper	Collection Surface/Substrate and its Specifications**
I 0 2	01	2	

Card No.	Comments on the Measurement**
I 0 3	RECTANGULAR CHANNEL BATTERY
I 0 4	
I 0 5	

J - PARTICULATE SIZE DISTRIBUTION DATA

Test Series No.	Sub-series No.	Run No.	Card No.	Measurement Instrument/Method No. / Stokes/Aerodynamic/Impaction Diameter (0, 1, or 2)	Particle Size Data**	Calib or Calc (1 or 0)
19	2	3	J 0 1	40 • 172	• 103 • 064	• 014 • 008 • • •
			J 0 2	•	• •	• • • • •
			J 0 3	•	• •	• • • • •

Card No.	Measurement Instrument/Method No. / Mass/No. (1 or 0)	Mass/No. Data
J 0 4	40 2 • 5 +05	4 • 2 +05 5 • 6 +05 1 • 4 +05 • • • • •
J 0 5	•	• • • • •

2.1.5 Labor Saving Features

In developing the data input forms and the data processing programs, several labor saving features have been introduced. These features reduce time, labor, and cost on the part of the encoder. However, misunderstanding of these features may result in the entering of erroneous data. The labor saving features are explained below. If the explanation is not clear, the safe rule to remember is "if in doubt, fill it out."

2.1.5.1 Repetitive Data Feature

The principal labor saving feature is the "Repetitive Data Feature." This feature enables the encoder to eliminate the entry of repetitive data on the data form. For example, a test series may have 20 subseries in which there is a data element or elements which do not change value from the first value entered. Once the data element value has been initialized for one subseries, the remaining 19 subseries do not have to be encoded (or keypunched) for that value. The FPEIS EDIT program will automatically duplicate the data when the test series is being processed for loading into the data base. All the data elements for which the "Repetitive Data Feature" is valid are identified by an asterisk (*) on the input forms for the subseries level and by a double asterisk (**) on Form 6 for the run level.

In many instances, the value of a particular data element may be constant for some subseries, then change values or may not be known for some subseries. In these situations, the value of the data element must be reinitialized to the new value. If the data are not known, the correct way to reinitialize the value is to enter "NA" in the first two columns of the field for alphanumeric data or "9" in every card column for numeric data. This is best seen through the following example:

> A test series has 20 subseries. The data element for TEMPERATURE on Form 3 has a value of 250 for subseries 1-10, a value of 230 for subseries 11-15, an unknown value for subseries 16-18, and a value of 261 for subseries 19 and 20.

For subseries 1, the value of 250 is entered into columns 67 to 69 of the D03 card on Form 3. The value has now been initialized. The same field is left blank for subseries 2 to 10 since the value is unchanged. For subseries 11, the new value of 230 is entered to reinitialize the value, and the field is left blank for subseries 12 to 15 to indicate that 230 is now the repeating value. Now, in subseries 16, the value is not known and the value must be reinitialized to a "null" value (not zero since zero may be a valid value) by entering a "9" into each of columns 66 to 69. If this data element was not a numeric value, then "NA" would be entered in the first two (left-most) columns in the field. When the data element value is initialized to "null," the same value may then be repeated by leaving the field blank for subseries 17 and 18. In subseries 19, the value of 261 is entered, and again the field is left blank for subseries 20. The same procedure may be applied at the run level as well.

In this way, with the "Repetitive Data Feature," only four unique values must be encoded instead of 20. It is clear then that for a number of unchanging values, this feature will save considerable time and effort.

The only exception to the encoding instructions for an unknown or "null" value occurs when such a value is needed in the <u>first subseries</u>. <u>For subseries 1 or run 1 within the same subseries, leave the field blank for an unknown or "null" value</u>.

2.1.5.2 Operating Parameter Serial Number Feature

The Serial Number (DO5 card, cc 16 and 17) for the control device operating parameter is also a labor saving feature. If some operating parameters change from subseries to subseries, only the serial number and value need to be encoded. The EDIT program will automatically reproduce the specification. This is shown in Figure 2.1-4.

Operating parameters which do not change will be duplicated automatically for subsequent subseries as described previously under the "Repetitive Data Feature."

2.1.5.3 Measurement Equipment/Method Number Feature

To further simplify the encoding of data which may be repeated, the Measurement Equipment/Method Number (I01 card, cc14) has been keyed as a labor saving feature. All data contained on Form 6 which is identified by the double asterisk (**) are treated uniquely according to this number. Measurement equipment types are given unique numbers when the data pertaining to each type are initially encoded. Unless altered by using the Repetitive Data Feature described earlier in Section 2.1.5.1, all data are assumed to be constant for that unique equipment number throughout the test series. This means that the user can enter just the equipment number for the measurement equipment type to describe subsequent runs in any order. The EDIT program will automatically reproduce the data.

For example, assume that a test series contains four subseries with the following runs described:

Subseries	Location	Run	Measurement Equipment
1	I	01	SASS TRAIN - WITH CYCLONES
		02	MRI MODEL 1502 IMPACTOR
2	O	01	SASS TRAIN - WITH CYCLONES
		02	UW MARK III IMPACTOR
		03	ANDERSEN MODEL III IMPACTOR
3	I	01	BRINK BMS-11 IMPACTOR
		02	CLIMET MODEL - OPC
4	O	01	ANDERSEN MODEL III IMPACTOR
		02	CLIMET MODEL - OPC

In order of occurrence, these instruments would be assigned the following equipment/method numbers:

1. SASS TRAIN - WITH CYCLONES
2. MRI MODEL 1502 IMPACTOR
3. UW MARK III IMPACTOR
4. ANDERSEN MODEL III IMPACTOR
5. BRINK BMS-II IMPACTOR
6. CLIMET MODEL - OPC

With the double asterisk (**) data initialized at the first occurrence of each instrument in the test series, only the equipment/method number would have to be encoded in the following cases:

Subseries 2, run 01 = 1

Subseries 4, run 01 = 4

Subseries 4, run 02 = 6

2.1.6 Standard Nomenclature and Units

Computerized information systems require that some standardization of data be present in order for specific data selection to be made. Computers search for and select data by comparing the selected value to a known value. When alphanumeric characters are used, such as in the name of a control device, the known value and the selected value must match exactly. For example, if a search is made for the value "ESP," all entries in the data base whose value is "ESP" will be selected; however, entries having the value "ELECTROSTATIC PRECIPITATOR" will not, although it is technically correct. Insofar as the computer is concerned, the two data are not equal and the selection will fail.

To ensure that uniform selection criteria are possible, the FPEIS uses standard nomenclature for certain data elements. Whenever data from one of these data elements is requested, it is essential that correct spelling be used or the request will fail.

Data elements in the FPEIS data base which require the use of standard nomenclature are given in Table 2.1-3. For these data elements, the encoder must select terms from a specified list (or menu) to describe the data of interest. While this list is expandable and will likely be expanded on a continuing basis, the encoder should use only the list of names provided. As is the case for any encoding of data, correct spelling is essential.

The allowed data for data elements requiring standard nomenclature are given in Tables 2.1-4 through 2.1-13. The specific use of each value is discussed in detail in Section 2.3; however, it is appropriate here to discuss the general criteria for using standard nomenclature on a group basis.

2.1.6.1 Source Description

Of the five data elements shown in Table 2.1-3 requiring standard nomenclature, all but one (STATE) require use of the NEDS Source Classification Codes (SCC). The allowed data values for each data element are given in Table 2.1-4, NEDS Source Classification Codes. Note that the values to be used are the word phrases and not the numeric code.

The reason for using the words rather than the numeric code for the SCC data is twofold. First, the numbering scheme within Source Categories is not unique; that is, the Source Category, Type of Operation, and Feed Material Class are all interrelated depending upon the Source Category. For example, the code 1-01-001-xx refers to EXTCOMB BOILER, ELECTRIC GENERATN, and ANTHRACITE COAL; however, if the Source Category is changed to INTERNL COMBUSTION from ELECTRIC GENERATN, the code 2-01-001-xx means that DISTILLATE OIL is the fuel. This means that unless burdensome qualification was used, major groups of sources using the same type of fuel could not be identified. By using the wording for each SCC entry, unique values may be obtained which will enable unqualified sorting of all data. This greatly increases the flexibility and usability of the FPEIS data base.

The data element for STATE requires use of the standard U.S. Postal Service two-letter abbreviation as given in Table 2.1-5.

An important feature to note is that the FPEIS can protect confidential or proprietary source data. Such data elements as site name, source name, street address, and city may be coded "CONFIDENTIAL" for any source whose identity or location cannot be disclosed by the encoding group. Other data elements such as state, UTM coordinates, ZIP code, and reference may be left blank if the encoding group so desires. This capability is described further in Section 2.3.1. This feature enables the FPEIS to store important particle size data from sources which would otherwise be unavailable to the FPEIS. EPA will have no knowledge whatsoever of the identity of the source.

2.1.6.2 Control Device Characteristics and Design Parameters

Data elements pertaining to fine particle control devices have been grouped to enable the user to describe the device in great detail. In order to allow for maximum sorting and retrieval flexibility, some data elements that describe the device have been assigned standard nomenclature. These data elements are: Device Category, Device Class, and Generic Device Type. The allowed data for the Device Class and Generic Device Type are given in Table 2.1-6.

The Device Category data element allows descriptive words to be encoded as a phrase or string of words to characterize the device. The key words allowed are given in Table 2.1-7.

Specific allowable DESIGN SPECIFICATION TYPE nomenclature is given in Table 2.1-8 along with the units to be used to express the value. This list is designed to be the minimum information list for each device type given. The user may add more specifications and values if he so chooses up to a maximum of 20 per device.

2.1.6.3 Test Characteristics and Control Device Operating Parameters

The SAMPLING LOCATION data element is identified by its position relative to the control device as either inlet or outlet. The allowed data to be encoded are as follows:

I (for inlet)

O (for outlet)

If the source has no control device applied, then an "I" should be encoded.

The FPEIS also has control device operating parameters and values in addition to the design specifications and values. Allowed data for the TYPICAL OPERATING PARAMETER TYPE and the units in which the data values are to be expressed are given in Table 2.1-9. As in the case of the design specifications, this is a minimum list and the user may add more information up to a maximum of 20 parameters.

2.1.6.4 Particulate Bioassay Data

To be added at a later date.

2.1.6.5 Particulate Chemical Composition

Present chemical analysis techniques do not provide for real-time, in situ analysis of the particulate matter in a gas stream. Generally, particulate samples are extracted from the gas stream by means of some type of inertial collection device such as a multiple cyclone collector or cascade impactor, and chemical analyses are performed on the material collected on each stage. In some cases, only the material collected from a mass train filter or from the pooling of collector stages is analyzed. The FPEIS has the capability of storing the results of chemical analyses (expressed as a concentration in micrograms per cubic meter) either as a function of particle size or as a mass train filter catch or pooled stages. When data are given according to particle size, the particle diameters may be based upon the Stokes, the aerodynamic, or the impaction diameter definition, and may be either calibrated or calculated values.

The FPEIS provides considerable flexibility for the identification of chemical species when data are to be encoded. This flexibility is in recognition of the fact that there presently exists a variety of ways to identify a particular element or compound. The chemical ID used in reporting chemical data is likely to be one with which the user is most familiar. A user's familiarity with a chemical ID scheme will be due largely to the nature of the project on which he is working. The FPEIS enables users to choose from among four chemical ID schema when they encode their data. These are the SOTDAT system,[1/]

1/ "SOTDAT Final Report," EPA No. 450/3-75-070, July 1975.

the Chemical Abstracts Services (CAS) Registration Numbers,[2/] the Multimedia Environmental Goals (MEG)[3/] for Environmental Assessment Numbers, and the EPA Environmental Assessment Level 1 Fractions.[4/] Each scheme has a unique entry code which will identify the type of chemical ID encoded to the FPEIS. These are given in Table 2.1-10.

Where possible, the preferred ID is the CAS Registration Number; however, any of the four may be used.

While the input protocol requires that a specific chemical ID be used, the FPEIS SERIES and SUMMARY Reports will give the name of the chemical species as well as additional pertinent data. This is discussed in the FPEIS REFERENCE MANUAL. A typical SERIES Report is given in Section 6.2 of this User Guide.

General types of chemical analysis methods have been identified for the FPEIS and are listed in Table 2.1-12. A standard one-character or two-character alphabetic code is used to identify the chemical analysis method when the data are encoded. As with the chemical IDs, the complete name of the analysis method will be given on output and not the alphabetic code.

2/ "Chemical Abstracts - Chemical Substance Index," American Chemical Society.

3/ "Multimedia Environmental Goals for Environmental Assessment," EPA No. 600/7-77-136a, November 1977.

4/ "Procedures Manual - Level 1 Environmental Assessment," EPA No. 600/2-76-160a, June 1976.

It should be noted, however, that the chemical IDs and analysis codes are stored in the data base itself and not the names. Selection criteria for sorting and/or retrieval should always specify the chemical ID or analysis code if the data are to be located.

2.1.6.6 Measurement Particulars

The identification of the particulate measurement instrument or method name requires the use of standard nomenclature if effective sorting or retrieval of particle size distribution data is to be accomplished. In Table 2.1-13, a list of standard names for measurement equipment is provided for seven classes of equipment. Use only the data provided. Any additional commentary may be given in the COMMENTS ON THE MEASUREMENT on the data form.

2.1.6.7 Engineering Units

As stated previously, the FPEIS uses metric units exclusively. While every attempt has been made to use SI (International System of Units) protocol whenever possible, some data elements are expressed in the metric equivalent of a more common English unit. The specific required units for each data element is given in Section 2.3. This is consistent with EPA policy regarding the use of metric units.

2.1.7 Data Preparation

The FPEIS EDIT program is a SYSTEM 2000 PLI (Procedural Language Interface) COBOL program that provides three functions before updates are made to the FPEIS data base.

First, it processes all input cards for a series and expands the text fields where necessary. This function allows the data collector to enter redundant information only once and it reduces the error rate of data preparation.

Second, the EDIT program produces reports that are formatted in the same manner as the SERIES Report which allows visual editing to be done in a format familiar to the user.

Third, the program performs usage and value checks on input data fields. If errors occur, the corresponding data base component and the invalid data are printed on the exception report.

The program is designed to minimize labor intensive activities associated with data preparation and to maximize the integrity of the data in the FPEIS data base.

2.1.8 Tables of Standard Nomenclature and Units

Tables in this subsection identify the standard nomenclature to be used when encoding data for or retrieving data from the FPEIS data base.

TABLE 2.1-3. DATA ELEMENTS REQUIRING STANDARD NOMENCLATURE

Source Description:

Source category
Type of operation
Feed material class
Operating mode class
State

Control Device Characteristics and Design Parameters:

Device category
Device class
Generic device type
Design specification type

Test Characteristics and Control Device Operating Parameters:

Control device location
Typical operating parameter type

Particulate Chemical Composition:

Chemical entry code
Chemical ID
Analysis method

Measurement Particulars:

Measurement instrument/method name

TABLE 2.1-4. SOURCE CLASSIFICATION CODES

Column I - Source Category

Column II - Type of Operation

Column III - Feed Material Class

Column IV - Operating Mode Class

TABLE 2.1-4.

NATIONAL EMISSIONS DATA SYSTEM (NEDS) SOURCE CLASSIFICATION CODE (SCC) REPORT

SCC CATEGORY NAMES

I	II	III	IV	UNITS
EXTCOMB BOILER	ELECTRIC GENERATN	ANTHRACITE COAL	>100MMBTU PULVIZD	TONS BURNED
EXTCOMB BOILER	ELECTRIC GENERATN	ANTHRACITE COAL	>100MMBTU STOKERS	TONS BURNED
EXTCOMB BOILER	ELECTRIC GENERATN	ANTHRACITE COAL	10-100MMBTU PULVD	TONS BURNED
EXTCOMB BOILER	ELECTRIC GENERATN	ANTHRACITE COAL	10-100MMBTU STOKR	TONS BURNED
EXTCOMB BOILER	ELECTRIC GENERATN	ANTHRACITE COAL	<10MMBTU PULVIZED	TONS BURNED
EXTCOMB BOILER	ELECTRIC GENERATN	ANTHRACITE COAL	<10MMBTU STOKER	TONS BURNED
EXTCOMB BOILER	ELECTRIC GENERATN	ANTHRACITE COAL	OTHER/NOT CLASIFD	TONS BURNED
EXTCOMB BOILER	ELECTRIC GENERATN	BITUMINOUS COAL	>100MMBTU PULV-WET	TONS BURNED
EXTCOMB BOILER	ELECTRIC GENERATN	BITUMINOUS COAL	>100MMBTU PULVDRY	TONS BURNED
EXTCOMB BOILER	ELECTRIC GENERATN	BITUMINOUS COAL	>100MMBTU CYCLONE	TONS BURNED
EXTCOMB BOILER	ELECTRIC GENERATN	BITUMINOUS COAL	>100MMBTU SPDSTKR	TONS BURNED
EXTCOMB BOILER	ELECTRIC GENERATN	BITUMINOUS COAL	>100MMBTU/HR UFSKR	TONS BURNED
EXTCOMB BOILER	ELECTRIC GENERATN	BITUMINOUS COAL	10-100MMBTU PULWET	TONS BURNED
EXTCOMB BOILER	ELECTRIC GENERATN	BITUMINOUS COAL	10-100MMBTU PULDY	TONS BURNED
EXTCOMB BOILER	ELECTRIC GENERATN	BITUMINOUS COAL	10-100MMBTU OFSTKR	TONS BURNED
EXTCOMB BOILER	ELECTRIC GENERATN	BITUMINOUS COAL	10-100MMBTU UFSTKR	TONS BURNED
EXTCOMB BOILER	ELECTRIC GENERATN	BITUMINOUS COAL	<10MMBTU OFSTOKER	TONS BURNED
EXTCOMB BOILER	ELECTRIC GENERATN	BITUMINOUS COAL	<10MMBTU UFSTOKER	TONS BURNED
EXTCOMB BOILER	ELECTRIC GENERATN	BITUMINOUS COAL	<10MMBTU PULV-DRY	TONS BURNED
EXTCOMB BOILER	ELECTRIC GENERATN	BITUMINOUS COAL	OTHER/NOT CLASIFD	TONS BURNED
EXTCOMB BOILER	ELECTRIC GENERATN	LIGNITE	>100MMBTU PULVWET	TONS BURNED
EXTCOMB BOILER	ELECTRIC GENERATN	LIGNITE	>100MMBTU PULVDRY	TONS BURNED
EXTCOMB BOILER	ELECTRIC GENERATN	LIGNITE	>100MMBTU CYCLONE	TONS BURNED
EXTCOMB BOILER	ELECTRIC GENERATN	LIGNITE	>100MMBTU OF STKR	TONS BURNED
EXTCOMB BOILER	ELECTRIC GENERATN	LIGNITE	>100MMBTU UF STKR	TONS BURNED
EXTCOMB BOILER	ELECTRIC GENERATN	LIGNITE	>100MMBTU SPDSTKR	TONS BURNED
EXTCOMB BOILER	ELECTRIC GENERATN	LIGNITE	10-100MMBTU DYPUL	TONS BURNED
EXTCOMB BOILER	ELECTRIC GENERATN	LIGNITE	10-100MMBTU WTPUL	TONS BURNED
EXTCOMB BOILER	ELECTRIC GENERATN	LIGNITE	10-100MMBTU OFSTKR	TONS BURNED
EXTCOMB BOILER	ELECTRIC GENERATN	LIGNITE	10-100MMBTU UFSTKR	TONS BURNED
EXTCOMB BOILER	ELECTRIC GENERATN	LIGNITE	10-100MMBTUSPDSTKR	TONS BURNED
EXTCOMB BOILER	ELECTRIC GENERATN	LIGNITE	<10MMBTU PULV DRY	TONS BURNED
EXTCOMB BOILER	ELECTRIC GENERATN	LIGNITE	<10MMBTU OF STOKR	TONS BURNED
EXTCOMB BOILER	ELECTRIC GENERATN	LIGNITE	<10MMBTU UF STOKR	TONS BURNED
EXTCOMB BOILER	ELECTRIC GENERATN	LIGNITE	<10MMBTU SPDSTOKR	TONS BURNED
EXTCOMB BOILER	ELECTRIC GENERATN	RESIDUAL OIL	>100MMBTU/HR GENL	1000GALLONS BURNED
EXTCOMB BOILER	ELECTRIC GENERATN	RESIDUAL OIL	10-100MMBTU/HRGNL	1000GALLONS BURNED
EXTCOMB BOILER	ELECTRIC GENERATN	RESIDUAL OIL	<10MMBTU/HR GENL	1000GALLONS BURNED
EXTCOMB BOILER	ELECTRIC GENERATN	DISTILLATE OIL	>100MMBTU/HR GENL	1000GALLONS BURNED
EXTCOMB BOILER	ELECTRIC GENERATN	DISTILLATE OIL	10-100MMBTU/HRGNL	1000GALLONS BURNED
EXTCOMB BOILER	ELECTRIC GENERATN	DISTILLATE OIL	<10MMBTU/HR GENL	1000GALLONS BURNED
EXTCOMB BOILER	ELECTRIC GENERATN	NATURAL GAS	>100MMBTU/HR	MILLION CUBIC FEET BURNED
EXTCOMB BOILER	ELECTRIC GENERATN	NATURAL GAS	10-100MMBTU/HR	MILLION CUBIC FEET BURNED
EXTCOMB BOILER	ELECTRIC GENERATN	NATURAL GAS	<10MMBTU/HR	MILLION CUBIC FEET BURNED
EXTCOMB BOILER	ELECTRIC GENERATN	PROCESS GAS	>100MMBTU/HR	MILLION CUBIC FEET BURNED
EXTCOMB BOILER	ELECTRIC GENERATN	PROCESS GAS	10-100MMBTU/HR	MILLION CUBIC FEET BURNED
EXTCOMB BOILER	ELECTRIC GENERATN	PROCESS GAS	<<10MMBTU/HR	MILLION CUBIC FEET BURNED
EXTCOMB BOILER	ELECTRIC GENERATN	COKE	>100MMBTU/HR	TONS BURNED
EXTCOMB BOILER	ELECTRIC GENERATN	BAGASSE	10-100MMBTU/HR	TONS BURNED
EXTCOMB BOILER	ELECTRIC GENERATN	BAGASSE	<10MMBTU/HR	TONS BURNED
EXTCOMB BOILER	ELECTRIC GENERATN	SOLID WASTE/COAL	>100MMBTU/HR	TONS BURNED
EXTCOMB BOILER	ELECTRIC GENERATN	SOLID WASTE/COAL	10-100MMBTU/HR	TONS BURNED
EXTCOMB BOILER	ELECTRIC GENERATN	SOLID WASTE/COAL	<10MMBTU/HR	TONS BURNED
EXTCOMB BOILER	ELECTRIC GENERATN	OTHER/NOT CLASIFD	SPECIFY IN REMARK	MILLION CUBIC FEET BURNED
EXTCOMB BOILER	ELECTRIC GENERATN	OTHER/NOT CLASIFD	SPECIFY IN REMARK	1000 GALLON (LIQUID) BURNED
EXTCOMB BOILER	ELECTRIC GENERATN	OTHER NOT CLASIFD	SPECIFY IN REMARK	TONS BURNED (SOLID)
EXTCOMB BOILER	INDUSTRIAL	ANTHRACITE COAL	>100MMBTU/HR PULV	TONS BURNED
EXTCOMB BOILER	INDUSTRIAL	ANTHRACITE COAL	>100MMBTU/HR STKR	TONS BURNED
EXTCOMB BOILER	INDUSTRIAL	ANTHRACITE COAL	10-100MMBTU PULVD	TONS BURNED
EXTCOMB BOILER	INDUSTRIAL	ANTHRACITE COAL	10-100MMBTU STKR	TONS BURNED
EXTCOMB BOILER	INDUSTRIAL	ANTHRACITE COAL	<10MMBTU/HR PULVD	TONS BURNED
EXTCOMB BOILER	INDUSTRIAL	ANTHRACITE COAL	<10MMBTU/HR STKR	TONS BURNED
EXTCOMB BOILER	INDUSTRIAL	ANTHRACITE COAL	<10MMBTU/HR HNDFIRED	TONS BURNED
EXTCOMB BOILER	INDUSTRIAL	ANTHRACITE COAL	OTHER/NOT CLASIFD	TONS BURNED
EXTCOMB BOILER	INDUSTRIAL	BITUMINOUS COAL	>100MMBTU PULVWET	TONS BURNED
EXTCOMB BOILER	INDUSTRIAL	BITUMINOUS COAL	>100MMBTU PULVDRY	TONS BURNED
EXTCOMB BOILER	INDUSTRIAL	BITUMINOUS COAL	>100MMBTU CYCLONE	TONS BURNED
EXTCOMB BOILER	INDUSTRIAL	BITUMINOUS COAL	>100MMBTU SPDSTKR	TONS BURNED
EXTCOMB BOILER	INDUSTRIAL	BITUMINOUS COAL	10-100MMBTU OFSTKR	TONS BURNED
EXTCOMB BOILER	INDUSTRIAL	BITUMINOUS COAL	10-100MMBTU UFSTKR	TONS BURNED
EXTCOMB BOILER	INDUSTRIAL	BITUMINOUS COAL	10-100MMBTU PULWT	TONS BURNED
EXTCOMB BOILER	INDUSTRIAL	BITUMINOUS COAL	10-100MMBTU PULDY	TONS BURNED
EXTCOMB BOILER	INDUSTRIAL	BITUMINOUS COAL	10-100MMBTUSPDSTK	TONS BURNED
EXTCOMB BOILER	INDUSTRIAL	BITUMINOUS COAL	<10MMBTU OFD STKR	TONS BURNED
EXTCOMB BOILER	INDUSTRIAL	BITUMINOUS COAL	<10MMBTU UFD STKR	TONS BURNED
EXTCOMB BOILER	INDUSTRIAL	BITUMINOUS COAL	<10MMBTU PULV DRY	TONS BURNED
EXTCOMB BOILER	INDUSTRIAL	BITUMINOUS COAL	<10MMBTU SPD STKR	TONS BURNED
EXTCOMB BOILER	INDUSTRIAL	BITUMINOUS COAL	<10MMBTU HANDFIRE	TONS BURNED
EXTCOMB BOILER	INDUSTRIAL	BITUMINOUS COAL	OTHER/NOT CLASIFD	TONS BURNED
EXTCOMB BOILER	INDUSTRIAL	LIGNITE	>100MMBTU PULVWET	TONS BURNED
EXTCOMB BOILER	INDUSTRIAL	LIGNITE	>100MMBTU PULVDRY	TONS BURNED
EXTCOMB BOILER	INDUSTRIAL	LIGNITE	>100MMBTU CYCLONE	TONS BURNED
EXTCOMB BOILER	INDUSTRIAL	LIGNITE	>100MMBTU OFSTKR	TONS BURNED
EXTCOMB BOILER	INDUSTRIAL	LIGNITE	>100MMBTU UFSTKR	TONS BURNED
EXTCOMB BOILER	INDUSTRIAL	LIGNITE	>100MMBTU SPDSTKR	TONS BURNED
EXTCOMB BOILER	INDUSTRIAL	LIGNITE	10-100MMBTU DYPUL	TONS BURNED
EXTCOMB BOILER	INDUSTRIAL	LIGNITE	10-100MMBTU WTPUL	TONS BURNED
EXTCOMB BOILER	INDUSTRIAL	LIGNITE	10-100MMBTU OFSTKR	TONS BURNED
EXTCOMB BOILER	INDUSTRIAL	LIGNITE	10-100MMBTU UFSTKR	TONS BURNED
EXTCOMB BOILER	INDUSTRIAL	LIGNITE	10-100MMBTUSPDSTK	TONS BURNED
EXTCOMB BOILER	INDUSTRIAL	LIGNITE	<10MMBTU PULV DRY	TONS BURNED
EXTCOMB BOILER	INDUSTRIAL	LIGNITE	<10MMBTU OFSTKR	TONS BURNED
EXTCOMB BOILER	INDUSTRIAL	LIGNITE	<10MMBTU UFSTKR	TONS BURNED
EXTCOMB BOILER	INDUSTRIAL	LIGNITE	<10MMBTU FANDFIRE	TONS BURNED
EXTCOMB BOILER	INDUSTRIAL	LIGNITE	<10MMBTU SPDSTKR	TONS BURNED
EXTCOMB BOILER	INDUSTRIAL	RESIDUAL OIL	>100MMBTU/HR	1000 GALLONS BURNED
EXTCOMB BOILER	INDUSTRIAL	RESIDUAL OIL	10-100MMBTU/HR	1000 GALLONS BURNED
EXTCOMB BOILER	INDUSTRIAL	RESIDUAL OIL	<10MMBTU/HR	1000 GALLONS BURNED
EXTCOMB BOILER	INDUSTRIAL	DISTILLATE OIL	>100MMBTU/HR	1000 GALLONS BURNED
EXTCOMB BOILER	INDUSTRIAL	DISTILLATE OIL	10-100MMBTU/HR	1000 GALLONS BURNED

TABLE 2.1-4. (Continued)

NATIONAL EMISSIONS DATA SYSTEM (NEDS)
SOURCE CLASSIFICATION CODE (SCC) REPORT

SCC CATEGORY NAMES

I	II	III	IV	UNITS
EXTCOMB BOILER	INDUSTRIAL	DISTILLATE OIL	<10MMBTU/HR	1000 GALLONS BURNED
EXTCOMB BOILER	INDUSTRIAL	NATURAL GAS	>100MMBTU/HR	MILLION CUBIC FEET BURNED
EXTCOMB BOILER	INDUSTRIAL	NATURAL GAS	10-100MMBTU/HR	MILLION CUBIC FEET BURNED
EXTCOMB BOILER	INDUSTRIAL	NATURAL GAS	<10MMBTU/HR	MILLION CUBIC FEET BURNED
EXTCOMB BOILER	INDUSTRIAL	PROCESS GAS	>100MMBTU/HR	MILLION CUBIC FEET BURNED
EXTCOMB BOILER	INDUSTRIAL	PROCESS GAS	10-100MMBTU/HR	MILLION CUBIC FEET BURNED
EXTCOMB BOILER	INDUSTRIAL	PROCESS GAS	<10MMBTU/HR	MILLION CUBIC FEET BURNED
EXTCOMB BOILER	INDUSTRIAL	COKE	10-100MMBTU/HR	TONS BURNED
EXTCOMB BOILER	INDUSTRIAL	COKE	<10MMBTU/HR	TONS BURNED
EXTCOMB BOILER	INDUSTRIAL	WOOD	WOOD WASTE BOILER	TONS BURNED
EXTCOMB BOILER	INDUSTRIAL	WOOD	SMALL HANDFIRE	TONS BURNED
EXTCOMB BOILER	INDUSTRIAL	LIQ PETROLEUM GAS	10-100MMBTU/HR	1000GALLONS BURNED
EXTCOMB BOILER	INDUSTRIAL	LIQ PETROLEUM GAS	<10MMBTU/HR	1000GALLONS BURNED
EXTCOMB BOILER	INDUSTRIAL	BAGASSE	10-100MMBTU/HR	TONS BURNED
EXTCOMB BOILER	INDUSTRIAL	BAGASSE	<10MMBTU/HR	TONS BURNED
EXTCOMB BOILER	INDUSTRIAL	OTHER/NOT CLASIFD	SPECIFY IN REMARK	MILLION CUBIC FEET BURNED
EXTCOMB BOILER	INDUSTRIAL	OTHER/NOT CLASIFD	SPECIFY IN REMARK	1000 GALLON BURNED (LIQUID)
EXTCOMB BOILER	INDUSTRIAL	OTHER NOT CLASIFD	SPECIFY IN REMARK	TONS BURNED (SOLID)
EXTCOMB BOILER	COMMERCL-INSTUTNL	ANTHRACITE COAL	10-100MMBTU PULVT	TONS BURNED
EXTCOMB BOILER	COMMERCL-INSTUTNL	ANTHRACITE COAL	10-100MMBTU PULDY	TONS BURNED
EXTCOMB BOILER	COMMERCL-INSTUTNL	ANTHRACITE COAL	10-100MMBTUSPOSTK	TONS BURNED
EXTCOMB BOILER	COMMERCL-INSTUTNL	ANTHRACITE COAL	<10MMBTU PULVIZED	TONS BURNED
EXTCOMB BOILER	COMMERCL-INSTUTNL	ANTHRACITE COAL	<10MMBTU STOKER	TONS BURNED
EXTCOMB BOILER	COMMERCL-INSTUTNL	ANTHRACITE COAL	<10MMBTU SPOSTOKR	TONS BURNED
EXTCOMB BOILER	COMMERCL-INSTUTNL	ANTHRACITE COAL	OTHER/NOT CLASIFD	TONS BURNED
EXTCOMB BOILER	COMMERCL-INSTUTNL	BITUMINOUS COAL	10-100MMBTU PULVT	TONS BURNED
EXTCOMB BOILER	COMMERCL-INSTUTNL	BITUMINOUS COAL	10-100MMBTU PULDY	TONS BURNED
EXTCOMB BOILER	COMMERCL-INSTUTNL	BITUMINOUS COAL	10-100MMBTU OFSTK	TONS BURNED
EXTCOMB BOILER	COMMERCL-INSTUTNL	BITUMINOUS COAL	10-100MMBTU UFSTK	TONS BURNED
EXTCOMB BOILER	COMMERCL-INSTUTNL	BITUMINOUS COAL	10-100MMBTUSPOSTK	TONS BURNED
EXTCOMB BOILER	COMMERCL-INSTUTNL	BITUMINOUS COAL	10-100MMBTU HANDFIRE	TONS BURNED
EXTCOMB BOILER	COMMERCL-INSTUTNL	BITUMINOUS COAL	<10MMBTU OFSTOKER	TONS BURNED
EXTCOMB BOILER	COMMERCL-INSTUTNL	BITUMINOUS COAL	<10MMBTU UFSTOKER	TONS BURNED
EXTCOMB BOILER	COMMERCL-INSTUTNL	BITUMINOUS COAL	<10MMBTU SPOSTOKR	TONS BURNED
EXTCOMB BOILER	COMMERCL-INSTUTNL	BITUMINOUS COAL	<10MMBTU HANDFIRE	TONS BURNED
EXTCOMB BOILER	COMMERCL-INSTUTNL	BITUMINOUS COAL	OTHER/NOT CLASIFD	TONS BURNED
EXTCOMB BOILER	COMMERCL-INSTUTNL	LIGNITE	10-100MMBTU PULVT	TONS BURNED
EXTCOMB BOILER	COMMERCL-INSTUTNL	LIGNITE	10-100MMBTU PULDY	TONS BURNED
EXTCOMB BOILER	COMMERCL-INSTUTNL	LIGNITE	10-100MMBTU OFSTK	TONS BURNED
EXTCOMB BOILER	COMMERCL-INSTUTNL	LIGNITE	10-100MMBTU UFSTK	TONS BURNED
EXTCOMB BOILER	COMMERCL-INSTUTNL	LIGNITE	10-100MMBTUSPOSTK	TONS BURNED
EXTCOMB BOILER	COMMERCL-INSTUTNL	LIGNITE	<10MMBTU PULVONLY	TONS BURNED
EXTCOMB BOILER	COMMERCL-INSTUTNL	LIGNITE	<10MMBTU OFSTOKER	TONS BURNED
EXTCOMB BOILER	COMMERCL-INSTUTNL	LIGNITE	<10MMBTU UFSTOKER	TONS BURNED
EXTCOMB BOILER	COMMERCL-INSTUTNL	LIGNITE	<10MMBTU SPOSTOKR	TONS BURNED
EXTCOMB BOILER	COMMERCL-INSTUTNL	LIGNITE	<10MMBTU HANDFIRE	TONS BURNED
EXTCOMB BOILER	COMMERCL-INSTUTNL	RESIDUAL OIL	>100MMBTU/HR	1000 GALLONS BURNED
EXTCOMB BOILER	COMMERCL-INSTUTNL	RESIDUAL OIL	10-100MMBTU/HR	1000 GALLONS BURNED
EXTCOMB BOILER	COMMERCL-INSTUTNL	RESIDUAL OIL	<10MMBTU/HR	1000 GALLONS BURNED
EXTCOMB BOILER	COMMERCL-INSTUTNL	DISTILLATE	>100MMBTU/HR	1000 GALLONS BURNED
EXTCOMB BOILER	COMMERCL-INSTUTNL	DISTILLATE	10-100MMBTU/HR	1000 GALLONS BURNED
EXTCOMB BOILER	COMMERCL-INSTUTNL	DISTILLATE	<10MMBTU/HR	1000 GALLONS BURNED
EXTCOMB BOILER	COMMERCL-INSTUTNL	NATURAL GAS	>100MMBTU/HR	MILLION CUBIC FEET BURNED
EXTCOMB BOILER	COMMERCL-INSTUTNL	NATURAL GAS	10-100MMBTU/HR	MILLION CUBIC FEET BURNED
EXTCOMB BOILER	COMMERCL-INSTUTNL	NATURAL GAS	<10MMBTU/HR	MILLION CUBIC FEET BURNED
EXTCOMB BOILER	COMMERCL-INSTUTNL	WOOD	<10MMBTU/HR	TONS BURNED
EXTCOMB BOILER	COMMERCL-INSTUTNL	LIQ PETROLEUM GAS	10-100MMBTU/HR	1000 GALLONS BURNED
EXTCOMB BOILER	COMMERCL-INSTUTNL	LIQ PETROLEUM GAS	<10MMBTU/HR	1000 GALLONS BURNED
EXTCOMB BOILER	COMMERCL-INSTUTNL	OTHER/NOT CLASIFD	SPECIFY IN REMARK	MILLION CUBIC FEET BURNED
EXTCOMB BOILER	COMMERCL-INSTUTNL	OTHER/NOT CLASIFD	SPECIFY IN REMARK	1000 GALLON BURNED (LIQUID)
EXTCOMB BOILER	COMMERCL-INSTUTNL	OTHER/NOT CLASIFD	SPECIFY IN REMARK	TONS BURNED (SOLID)
INTERNLCOMBUSTION	ELECTRIC GENERATN	DISTILLATE OIL	TURBINE	1000 GALLONS BURNED
INTERNLCOMBUSTION	ELECTRIC GENERATN	NATURAL GAS	TURBINE	MILLION CUBIC FEET
INTERNLCOMBUSTION	ELECTRIC GENERATN	DIESEL	RECIPROCATING	THOUSANDS OF GALLONS
INTERNLCOMBUSTION	ELECTRIC GENERATN	OTHER/NOT CLASIFD	SPECIFY IN REMARK	MILLION CUBIC FEET BURNED
INTERNLCOMBUSTION	ELECTRIC GENERATN	OTHER/NOT CLASIFD	SPECIFY IN REMARK	1000 GALLONS BURNED
INTERNLCOMBUSTION	INDUSTRIAL	DISTILLATE OIL	TURBINE	1000 GALLONS BURNED
INTERNLCOMBUSTION	INDUSTRIAL	DISTILLATE OIL	RECIPROCATING	1000 GALLONS BURNED
INTERNLCOMBUSTION	INDUSTRIAL	NATURAL GAS	TURBINE	MILLION CUBIC FEET
INTERNLCOMBUSTION	INDUSTRIAL	NATURAL GAS	RECIPROCATING	MILLION CUBIC FEET
INTERNLCOMBUSTION	INDUSTRIAL	GASOLINE	RECIPROCATING	1000 GALLONS BURNED
INTERNLCOMBUSTION	INDUSTRIAL	DIESEL FUEL	RECIPROCATING	1000 GALLONS BURNED
INTERNLCOMBUSTION	INDUSTRIAL	OTHER/NOT CLASIFD	SPECIFY IN REMARK	MILLION CUBIC FEET BURNED
INTERNLCOMBUSTION	INDUSTRIAL	OTHER/NOT CLASIFD	SPECIFY IN REMARK	1000 GALLONS BURNED
INTERNLCOMBUSTION	COMMERCL-INSTUTNL	DIESEL	RECIPROCATING	THOUSANDS OF GALLONS
INTERNLCOMBUSTION	COMMERCL-INSTUTNL	OTHER/NOT CLASIFD	SPECIFY IN REMARK	MILLION CUBIC FEET BURNED
INTERNLCOMBUSTION	COMMERCL-INSTUTNL	OTHER/NOT CLASIFD	SPECIFY IN REMARK	1000 GALLONS BURNED
INTERNLCOMBUSTION	ENGINE TESTING	AIRCRAFT	TURBOJET	THOUSANDS OF GALLON/FUEL
INDUSTRIAL PROCES	CHEMICAL MFG	ADIPIC ACID PROD	GENERAL-CYCLOHEX	TONS PRODUCED
INDUSTRIAL PROCES	CHEMICAL MFG	APIPIC ACID PROD	OTHER/NOT CLASIFD	TONS PRODUCED
INDUSTRIAL PROCES	CHEMICAL MFG	AMMONIA W/METHNATR	PURGE GAS	TONS PRODUCED
INDUSTRIAL PROCES	CHEMICAL MFG	AMMONIA W/METHNATR	STORAGE/LOADING	TONS PRODUCED
INDUSTRIAL PROCES	CHEMICAL MFG	AMMONIA W/COABSRB	REGENERATOR EXIT	TONS PRODUCED
INDUSTRIAL PROCES	CHEMICAL MFG	AMMONIA W/COABSRB	PURGE GAS	TONS PRODUCED
INDUSTRIAL PROCES	CHEMICAL MFG	AMMONIA W/COABSRB	STORAGE/LOADING	TONS PRODUCED
INDUSTRIAL PROCES	CHEMICAL MFG	AMMONIA	OTHER/NOT CLASIFD	TONS PRODUCED
INDUSTRIAL PROCES	CHEMICAL MFG	AMMONIUM NITRATE	GENERAL	TONS PRODUCED
INDUSTRIAL PROCES	CHEMICAL MFG	AMMONIUM NITRATE	OTHER/NOT CLASIFD	TONS PRODUCED
INDUSTRIAL PROCES	CHEMICAL MFG	CARBON BLACK	CHANNEL PROCESS	TONS PRODUCED
INDUSTRIAL PROCES	CHEMICAL MFG	CARBON BLACK	THERMAL PROCESS	TONS PRODUCED
INDUSTRIAL PROCES	CHEMICAL MFG	CARBON BLACK	FURNACE PROC GAS	TONS PRODUCED
INDUSTRIAL PROCES	CHEMICAL MFG	CARBON BLACK	FURNACE PROC OIL	TONS PRODUCED
INDUSTRIAL PROCES	CHEMICAL MFG	CARBON BLACK	FURNACE W/GAS/OIL	TONS PRODUCED
INDUSTRIAL PROCES	CHEMICAL MFG	CARBON BLACK	OTHER/NOT CLASFD	TONS PRODUCT
INDUSTRIAL PROCES	CHEMICAL MFG	CHARCOAL MFG	PYROL/DISTIL/GENL	TONS PRODUCED
INDUSTRIAL PROCES	CHEMICAL MFG	CHARCOAL MFG	OTHER/NOT CLASFD	TONS PRODUCT
INDUSTRIAL PROCES	CHEMICAL MFG	CHLORINE	GENERAL	TONS PRODUCED
INDUSTRIAL PROCES	CHEMICAL MFG	CHLORINE	OTHER/NOT CLASIFD	TONS PRODUCED
INDUSTRIAL PROCES	CHEMICAL MFG	CHLORINE-ALKALI	LIQUIFIED-DIAPHRAM	100 TONS CHLORINE LIQUEFIED
INDUSTRIAL PROCES	CHEMICAL MFG	CHLORINE-ALKALI	LIQUIFIED-MERC CEL	100 TONS CHLORINE LIQUEFIED

TABLE 2.1-4. (Continued)

NATIONAL EMISSIONS DATA SYSTEM (NEDS)
SOURCE CLASSIFICATION CODE (SCC) REPORT

SCC CATEGORY NAMES

I	II	III	IV	UNITS
INDUSTRIAL	PROCESI CHEMICAL MFG	ICHLOR-ALKALI	ILOADING TNKCARVNT	100 TONS CHLORINE LIQUEFIED
INDUSTRIAL	PROCESI CHEMICAL MFG	ICHLOR-ALKALI	ILOADING STGTNKVNT	100 TONS CHLORINE LIQUEFIED
INDUSTRIAL	PROCESI CHEMICAL MFG	ICHLOR-ALKALI	IAIR-BLOW HC BWINE	100 TONS CHLORINE LIQUEFIED
INDUSTRIAL	PROCESI CHEMICAL MFG	ICHLOR-ALKALI	IOTHER/NOT CLASIFD	100 TONS CHLORINE LIQUEFIED
INDUSTRIAL	PROCESI CHEMICAL MFG	ICLEANING CHEMICLS	ISOAP/DET SPNTDRYR	TONS PRODUCED
INDUSTRIAL	PROCESI CHEMICAL MFG	ICLEANING CHEMICLS	ISPECIALTY CLEANRS	TONS PRODUCT
INDUSTRIAL	PROCESI CHEMICAL MFG	ICLEANING CHEMICLS	IOTHERS/NOT CLASFD	TONS PRODUCED
INDUSTRIAL	PROCESI CHEMICAL MFG	IEXPLOSIVES-TNT	INITRATION REACTRS	TONS PRODUCED
INDUSTRIAL	PROCESI CHEMICAL MFG	IEXPLOSIVES-TNT	IHNO3 CONCTRTNS	TONS PRODUCED
INDUSTRIAL	PROCESI CHEMICAL MFG	IEXPLOSIVES-TNT	IH2SO4 REGENERATR	TONS PRODUCED
INDUSTRIAL	PROCESI CHEMICAL MFG	IEXPLOSIVES-TNT	IRED WATER INCIN	TONS PRODUCED
INDUSTRIAL	PROCESI CHEMICAL MFG	IEXPLOSIVES-TNT	IOPEN WASTE BURN	TONS BURNED
INDUSTRIAL	PROCESI CHEMICAL MFG	IEXPLOSIVES	IOTHER/NOT CLASIFD	TONS PRODUCED
INDUSTRIAL	PROCESI CHEMICAL MFG	IHYDROCHLORIC ACID	IBYPRODUCT W/OSCRUB	TONS FINAL ACID
INDUSTRIAL	PROCESI CHEMICAL MFG	IHYDROCHLORIC ACID	IBYPRODUCT W/SCRUB	TONS FINAL ACID
INDUSTRIAL	PROCESI CHEMICAL MFG	IHYDROCHLORIC ACID	IOTHER/NOT CLASIFD	TONS FINAL ACID
INDUSTRIAL	PROCESI CHEMICAL MFG	IHYDROFLUORIC ACID	IROTARYKILNW/SCRUBR	TONS ACID
INDUSTRIAL	PROCESI CHEMICAL MFG	IHYDROFLUORIC ACID	IROTARYKILNW/OSCRUB	TONS ACID
INDUSTRIAL	PROCESI CHEMICAL MFG	IHYDROFLUORIC ACID	IGWIND/DRY FLUOSPR	TONS FLUORSPAR
INDUSTRIAL	PROCESI CHEMICAL MFG	IHYDROFLUORIC ACID	IOTHER/NOT CLASIFD	TONS ACID
INDUSTRIAL	PROCESI CHEMICAL MFG	INITRIC ACID	IAMMONIAOXIDATNOLD	TONS PURE ACID PRODUCED
INDUSTRIAL	PROCESI CHEMICAL MFG	INITRIC ACID	IAMMONIAOXIDATNNEW	TONS PURE ACID PRODUCED
INDUSTRIAL	PROCESI CHEMICAL MFG	INITRIC ACID	INITRCD CONCTR OLD	TONS PURE ACID PRODUCED
INDUSTRIAL	PROCESI CHEMICAL MFG	INITRIC ACID	INITRCD CONCTR NEW	TONS PURE ACID PRODUCED
INDUSTRIAL	PROCESI CHEMICAL MFG	INITRIC ACID-WEAK	IUNCONTROLLED	TONS PURE ACID PRODUCED
INDUSTRIAL	PROCESI CHEMICAL MFG	INITRIC ACID-WEAK	IW/CATYL/COMBUSTER	TONS PURE ACID PRODUCED
INDUSTRIAL	PROCESI CHEMICAL MFG	INITRIC ACID-STRNG	IUNCONTROLLED	TONS PURE ACID PRODUCED
INDUSTRIAL	PROCESI CHEMICAL MFG	INITRIC ACID-STRNG	IW/ABSORBERS	TONS PURE ACID PRODUCED
INDUSTRIAL	PROCESI CHEMICAL MFG	INITRIC ACID	IOTHER/NOT CLASIFD	TONS PURE ACID PRODUCED
INDUSTRIAL	PROCESI CHEMICAL MFG	IPAINT MFG	IGENERAL	TONS PRODUCED
INDUSTRIAL	PROCESI CHEMICAL MFG	IPAINT MFG	IPIGMENT KILN	TONS PRODUCT
INDUSTRIAL	PROCESI CHEMICAL MFG	IPAINT MFG	IOTHER/NOT CLASFD	TONS PRODUCT
INDUSTRIAL	PROCESI CHEMICAL MFG	IVARNISH MFG	IBODYING OIL GENL	TONS PRODUCED
INDUSTRIAL	PROCESI CHEMICAL MFG	IVARNISH MFG	IOLEORESINOUS GENL	TONS PRODUCED
INDUSTRIAL	PROCESI CHEMICAL MFG	IVARNISH MFG	IALKYD GENERAL	TONS PRODUCED
INDUSTRIAL	PROCESI CHEMICAL MFG	IVARNISH MFG	IACRYLIC GENERAL	TONS PRODUCED
INDUSTRIAL	PROCESI CHEMICAL MFG	IVARNISH MFG	IOTHER/NOT CLASFD	TONS PRODUCED
INDUSTRIAL	PROCESI CHEMICAL MFG	IPHOS-ACID WETPROC	IREACTOR-UNCONTLD	TONS PHOSPHATE ROCK
INDUSTRIAL	PROCESI CHEMICAL MFG	IPHOS-ACID WETPROC	IGYPSUM POND	TONS PHOSPHATE ROCK
INDUSTRIAL	PROCESI CHEMICAL MFG	IPHOS-ACID WETPROC	ICONDENSR-UNCONTLD	TONS PHOSPHATE ROCK
INDUSTRIAL	PROCESI CHEMICAL MFG	IPHOS-ACID WETPROC	IOTHER/NOT CLASFD	TONS PRODUCED
INDUSTRIAL	PROCESI CHEMICAL MFG	IPHOS-ACID THERMAL	IGENERAL	TONS PHOSPHOROUS BURNED
INDUSTRIAL	PROCESI CHEMICAL MFG	IPHOS-ACID THERMAL	IOTHER/NOT CLASFD	TONS PRODUCED
INDUSTRIAL	PROCESI CHEMICAL MFG	IPLASTICS	IPVC-GENERAL	TONS PRODUCED
INDUSTRIAL	PROCESI CHEMICAL MFG	IPLASTICS	IPOLYPROD-GENERAL	TONS PRODUCED
INDUSTRIAL	PROCESI CHEMICAL MFG	IPLASTICS	IBAKELITE-GENERAL	TONS PRODUCT
INDUSTRIAL	PROCESI CHEMICAL MFG	IPLASTICS	IOTHER/NOT CLASFD	TONS PRODUCED
INDUSTRIAL	PROCESI CHEMICAL MFG	IPHTHALIC ANHYDRID	IUNCONTROLLED-GENL	TONS PRODUCED
INDUSTRIAL	PROCESI CHEMICAL MFG	IPRINTING INK	ICOOKING-GENERAL	TONS PRODUCED
INDUSTRIAL	PROCESI CHEMICAL MFG	IPRINTING INK	ICOOKING-OILS	TONS PRODUCED
INDUSTRIAL	PROCESI CHEMICAL MFG	IPRINTING INK	ICOOKING-OLEORESIN	TONS PRODUCED
INDUSTRIAL	PROCESI CHEMICAL MFG	IPRINTING INK	ICOOKING-ALKYDS	TONS PRODUCED
INDUSTRIAL	PROCESI CHEMICAL MFG	IPRINTING INK	IPIGMENT MIXING GEN	TONS PIGMENT
INDUSTRIAL	PROCESI CHEMICAL MFG	IPRINTING INK	IOTHER/NOT CLASFD	TONS PRODUCED
INDUSTRIAL	PROCESI CHEMICAL MFG	ISODIUM CARBONATE	IAMMONIA RECOVERY	TONS PRODUCED
INDUSTRIAL	PROCESI CHEMICAL MFG	ISODIUM CARBONATE	IHANDLING	TONS PRODUCED
INDUSTRIAL	PROCESI CHEMICAL MFG	ISODIUM CARBONATE	IOTHER/NOT CLASFD	TONS PRODUCED
INDUSTRIAL	PROCESI CHEMICAL MFG	IH2SO4 -CHAMBER	IGENERAL	TONS PURE ACID PRODUCED
INDUSTRIAL	PROCESI CHEMICAL MFG	IH2SO4-CONTACT	I99.7 CONVERSION	TONS PURE ACID PRODUCED
INDUSTRIAL	PROCESI CHEMICAL MFG	IH2SO4-CONTACT	I99.5 CONVERSION	TONS PURE ACID PRODUCED
INDUSTRIAL	PROCESI CHEMICAL MFG	IH2SO4-CONTACT	I99.3 CONVERSION	TONS PURE ACID PRODUCED
INDUSTRIAL	PROCESI CHEMICAL MFG	IH2SO4-CONTACT	I98.0 CONVERSION	TONS PURE ACID PRODUCED
INDUSTRIAL	PROCESI CHEMICAL MFG	IH2SO4-CONTACT	I97.0 CONVERSION	TONS PURE ACID PRODUCED
INDUSTRIAL	PROCESI CHEMICAL MFG	IH2SO4-CONTACT	I96.0 CONVERSION	TONS PURE ACID PRODUCED
INDUSTRIAL	PROCESI CHEMICAL MFG	IH2SO4-CONTACT	I95.0 CONVERSION	TONS PURE ACID PRODUCED
INDUSTRIAL	PROCESI CHEMICAL MFG	IH2SO4-CONTACT	I94.0 CONVERSION	TONS PURE ACID PRODUCED
INDUSTRIAL	PROCESI CHEMICAL MFG	IH2SO4-CONTACT	I93.0 CONVERSION	TONS PURE ACID PRODUCED
INDUSTRIAL	PROCESI CHEMICAL MFG	IH2SO4-CONTACT	IOTHER/NOT CLASFD	TONS PRODUCED
INDUSTRIAL	PROCESI CHEMICAL MFG	ISYNTHETIC FIBERS	INYLON GENERAL	TONS FIBER
INDUSTRIAL	PROCESI CHEMICAL MFG	ISYNTHETIC FIBERS	IDACRON GENERAL	TONS FIBER
INDUSTRIAL	PROCESI CHEMICAL MFG	ISYNTHETIC FIBERS	IORLON	TONS PRODUCT
INDUSTRIAL	PROCESI CHEMICAL MFG	ISYNTHETIC FIBERS	IELASTIC	TONS PRODUCT
INDUSTRIAL	PROCESI CHEMICAL MFG	ISYNTHETIC FIBERS	ITEFLON	TONS PRODUCT
INDUSTRIAL	PROCESI CHEMICAL MFG	ISYNTHETIC FIBERS	IPOLYESTER	TONS PRODUCT
INDUSTRIAL	PROCESI CHEMICAL MFG	ISYNTHETIC FIBERS	INOMEX	TONS PRODUCT
INDUSTRIAL	PROCESI CHEMICAL MFG	ISYNTHETIC FIBERS	IACRYLIC	TONS PRODUCT
INDUSTRIAL	PROCESI CHEMICAL MFG	ISYNTHETIC FIBERS	ITYVEX	TONS PRODUCT
INDUSTRIAL	PROCESI CHEMICAL MFG	ISYNTHETIC FIBERS	IOLEFINS	TONS PRODUCT
INDUSTRIAL	PROCESI CHEMICAL MFG	ISYNTHETIC FIBERS	IOTHERS/NOT CLASFD	TONS PRODUCED
INDUSTRIAL	PROCESI CHEMICAL MFG	ISEMISYNTHETICFIBR	IRAYON GENERAL	TONS FIBER
INDUSTRIAL	PROCESI CHEMICAL MFG	ISEMISYNTHETICFIBR	IACETATE	TONS PRODUCED
INDUSTRIAL	PROCESI CHEMICAL MFG	ISEMISYNTHETICFIBR	IVISCOSE	TONS PRODUCED
INDUSTRIAL	PROCESI CHEMICAL MFG	ISEMISYNTHETICFIBR	IOTHERS/NOT CLASFD	TONS PRODUCED
INDUSTRIAL	PROCESI CHEMICAL MFG	ISYNTHETIC RUBBER	IBUTADIENE-GENERAL	TONS PRODUCT
INDUSTRIAL	PROCESI CHEMICAL MFG	ISYNTHETIC RUBBER	IMETHYLPROPENE-GNL	TONS PRODUCT
INDUSTRIAL	PROCESI CHEMICAL MFG	ISYNTHETIC RUBBER	IBUTYNE GENERAL	TONS PRODUCT
INDUSTRIAL	PROCESI CHEMICAL MFG	ISYNTHETIC RUBBER	IPENTADIENE-GENRL	TONS PRODUCT
INDUSTRIAL	PROCESI CHEMICAL MFG	ISYNTHETIC RUBBER	IDIMETHHEPTNE GENL	TONS PRODUCT
INDUSTRIAL	PROCESI CHEMICAL MFG	ISYNTHETIC RUBBER	IPENTANE-GENERAL	TONS PRODUCT
INDUSTRIAL	PROCESI CHEMICAL MFG	ISYNTHETIC RUBBER	IETHANENITRILE-GEN	TONS PRODUCT
INDUSTRIAL	PROCESI CHEMICAL MFG	ISYNTHETIC RUBBER	IACRYLONITRILE-GEN	TONS PRODUCT
INDUSTRIAL	PROCESI CHEMICAL MFG	ISYNTHETIC RUBBER	IACROLEIN-GENERAL	TONS PRODUCT
INDUSTRIAL	PROCESI CHEMICAL MFG	ISYNTHETIC RUBBER	IAUTO TIRES GENERL	TONS PRODUCT
INDUSTRIAL	PROCESI CHEMICAL MFG	ISYNTHETIC RUBBER	IOTHER/NOT CLASFD	TONS PRODUCT
INDUSTRIAL	PROCESI CHEMICAL MFG	IFERTILIZ AMONNITR	IPRILLNG-NEUTRLIZR	TONS PRODUCED
INDUSTRIAL	PROCESI CHEMICAL MFG	IFERTILIZ AMONNITR	IPRILLING TOWER	TONS PRODUCED
INDUSTRIAL	PROCESI CHEMICAL MFG	IFERTILIZ AMONNITR	IPRILLNG-DRYCOOLRS	TONS PRODUCED
INDUSTRIAL	PROCESI CHEMICAL MFG	IFERTILIZ AMONNITR	IGRANULAT-NEUTLIZR	TONS PRODUCED
INDUSTRIAL	PROCESI CHEMICAL MFG	IFERTILIZ AMONNITR	IGRANULATOR	TONS PRODUCED
INDUSTRIAL	PROCESI CHEMICAL MFG	IFERTILIZ AMONNITR	IGRANULAT-DRYCOOLRS	TONS PRODUCED

TABLE 2.1-4. (Continued)

NATIONAL EMISSIONS DATA SYSTEM (NEDS)
SOURCE CLASSIFICATION CODE (SCC) REPORT

SCC CATEGORY NAMES

I	II	III	IV	UNITS
INDUSTRIAL PROCESS	CHEMICAL MFG	FERTILIZ-NSUPPHOS	GRINO-DRY	TONS PRODUCED
INDUSTRIAL PROCESS	CHEMICAL MFG	FERTILIZ-NSUPPHOS	MAIN STACK	TONS PRODUCED
INDUSTRIAL PROCESS	CHEMICAL MFG	FERTILIZ-TRPSPHOS	RUN OF PILE	TONS PRODUCED
INDUSTRIAL PROCESS	CHEMICAL MFG	FERTILIZ-TRPSPHOS	GRANULAR	TONS PRODUCED
INDUSTRIAL PROCESS	CHEMICAL MFG	FERTILIZ-DIAMPHOS	DRYER-COOLERS	TONS PRODUCED
INDUSTRIAL PROCESS	CHEMICAL MFG	FERTILIZ-DIAMPHOS	AMONIAT-GRANULATE	TONS PRODUCED
INDUSTRIAL PROCESS	CHEMICAL MFG	FERTILIZER	OTHER/NOT CLASIFD	TONS PRODUCED
INDUSTRIAL PROCESS	CHEMICAL MFG	TEREPTHALIC ACID	HNO3-PARAXYLENGEN	TONS PRODUCED
INDUSTRIAL PROCESS	CHEMICAL MFG	TEREPTHALIC ACID	OTHER/NOT CLASIFD	TONS PRODUCED
INDUSTRIAL PROCESS	CHEMICAL MFG	SULFUR(ELEMENTAL)	MOD-CLAUS 2STAGE	TONS PRODUCT
INDUSTRIAL PROCESS	CHEMICAL MFG	SULFUR(ELEMENTAL)	MOD-CLAUS 3STAGE	TONS PRODUCT
INDUSTRIAL PROCESS	CHEMICAL MFG	SULFUR(ELEMENTAL)	MOD-CLAUS 4STAGE	TONS PRODUCT
INDUSTRIAL PROCESS	CHEMICAL MFG	SULFUR(ELEMENTAL)	OTHER/NOT CLASIFD	TONS PRODUCT
INDUSTRIAL PROCESS	CHEMICAL MFG	PESTICIDES	MALATHION	GALLONS OF PRODUCT
INDUSTRIAL PROCESS	CHEMICAL MFG	PESTICIDES	OTHER/NOT CLASIFD	TONS PRODUCED
INDUSTRIAL PROCESS	CHEMICAL MFG	AMINES/AMIDES	GENERAL/OTHER	TONS PRODUCT
INDUSTRIAL PROCESS	CHEMICAL MFG	PIGMENT-INORGAN	CALCINATION	TONS OF PRODUCT
INDUSTRIAL PROCESS	CHEMICAL MFG	PIGMENT-INORGAN	OTHER/NOT CLASIFD	TONS OF PRODUCT
INDUSTRIAL PROCESS	CHEMICAL MFG	SODIUM SULFATE	GENERAL/OTHER	TONS PRODUCT
INDUSTRIAL PROCESS	CHEMICAL MFG	SODIUM SULFATE	KILNS	TONS PRODUCT
INDUSTRIAL PROCESS	CHEMICAL MFG	SODIUM SULFITE	GENERAL/OTHER	TONS PRODUCT
INDUSTRIAL PROCESS	CHEMICAL MFG	SODIUM SULFITE	KILNS	TONS PRODUCT
INDUSTRIAL PROCESS	CHEMICAL MFG	SODIUM BICARB	GENERAL	TONS PRODUCT
INDUSTRIAL PROCESS	CHEMICAL MFG	LITHIUM HYDROXIDE	GENERAL	TONS PRODUCT
INDUSTRIAL PROCESS	CHEMICAL MFG	FERTILIZER UREA	GENERAL	TONS PRODUCT
INDUSTRIAL PROCESS	CHEMICAL MFG	ADHESIVES	GENL/COMPND UNKWN	TONS PRODUCT
INDUSTRIAL PROCESS	CHEMICAL MFG	ACETATE FLAKE	OTHER/NOT CLASFD	TONS PRODUCT
INDUSTRIAL PROCESS	CHEMICAL MFG	ACETONE	OTHER/NOT CLASFD	TONS PRODUCT
INDUSTRIAL PROCESS	CHEMICAL MFG	MALEIC ANHYDRIDE	GENERAL/OTHER	TONS PRODUCT
INDUSTRIAL PROCESS	CHEMICAL MFG	POLYVINL PYRILIDON	GENERAL/OTHER	TONS PRODUCT
INDUSTRIAL PROCESS	CHEMICAL MFG	SULFONIC ACID/ATS	GENERAL/OTHER	TONS PRODUCT
INDUSTRIAL PROCESS	CHEMICAL MFG	WASTE GAS FLARES	OTHER/NOT CLASIFD	MILLION CUBIC FEET BURNED
INDUSTRIAL PROCESS	CHEMICAL MFG	OTHER/NOT CLASIFD	SPECIFY IN REMARK	TONS PRODUCT
INDUSTRIAL PROCESS	FOOD/AGRICULTURAL	ALFALFA DEHYDRATN	GENERAL	TONS MEAL PRODUCED
INDUSTRIAL PROCESS	FOOD/AGRICULTURAL	ALFALFA DEHYDRATN	OTHER/NOT CLASFD	TONS PRODUCT
INDUSTRIAL PROCESS	FOOD/AGRICULTURAL	COFFEE ROASTING	DIRECTFIRE ROASTR	TONS GREEN BEANS
INDUSTRIAL PROCESS	FOOD/AGRICULTURAL	COFFEE ROASTING	INDIRCTFIREROASTR	TONS GREEN BEANS
INDUSTRIAL PROCESS	FOOD/AGRICULTURAL	COFFEE ROASTING	STONER/COOLER	TONS GREEN BEANS
INDUSTRIAL PROCESS	FOOD/AGRICULTURAL	COFFEE ROASTING	OTHER/NOT CLASFD	TONS PRODUCT
INDUSTRIAL PROCESS	FOOD/AGRICULTURAL	COFFEE-INSTANT	SPRAY DRIER	TONS GREEN BEANS
INDUSTRIAL PROCESS	FOOD/AGRICULTURAL	COTTON GINNING	UNLOADING FAN	BALES COTTON
INDUSTRIAL PROCESS	FOOD/AGRICULTURAL	COTTON GINNING	CLEANER	BALES COTTON
INDUSTRIAL PROCESS	FOOD/AGRICULTURAL	COTTON GINNING	STICK/BURR MACHINE	BALES COTTON
INDUSTRIAL PROCESS	FOOD/AGRICULTURAL	COTTON GINNING	OTHER/NOT CLASFD	BALES COTTON
INDUSTRIAL PROCESS	FOOD/AGRICULTURAL	FEED/GRAIN TERMEL	SHIPING/RECEIVING	TONS GRAIN PROCESSED
INDUSTRIAL PROCESS	FOOD/AGRICULTURAL	FEED/GRAIN TERMEL	TRANSFER/CONVEYING	TONS GRAIN PROCESSED
INDUSTRIAL PROCESS	FOOD/AGRICULTURAL	FEED/GRAIN TERMEL	SCREENING/CLEANING	TONS GRAIN PROCESSED
INDUSTRIAL PROCESS	FOOD/AGRICULTURAL	FEED/GRAIN TERMEL	DRYING	TONS GRAIN PROCESSED
INDUSTRIAL PROCESS	FOOD/AGRICULTURAL	FEED/GRAIN CNTRYE	SHIPING/RECEIVING	TONS GRAIN PROCESSED
INDUSTRIAL PROCESS	FOOD/AGRICULTURAL	FEED/GRAIN CNTRYE	TRANSFER/CONVEYING	TONS GRAIN PROCESSED
INDUSTRIAL PROCESS	FOOD/AGRICULTURAL	FEED/GRAIN CNTRYE	SCREENING/CLEANING	TONS GRAIN PROCESSED
INDUSTRIAL PROCESS	FOOD/AGRICULTURAL	FEED/GRAIN CNTRYE	DRYING	TONS GRAIN PROCESSED
INDUSTRIAL PROCESS	FOOD/AGRICULTURAL	FEED/GRAIN	OTHER/NOT CLASIFD	TONS GRAIN PROCESSED
INDUSTRIAL PROCESS	FOOD/AGRICULTURAL	GRAIN PROCESSING	CORN MEAL	TONS GRAIN PROCESSED
INDUSTRIAL PROCESS	FOOD/AGRICULTURAL	GRAIN PROCESSING	SOY BEAN	TONS GRAIN PROCESSED
INDUSTRIAL PROCESS	FOOD/AGRICULTURAL	GRAIN PROCESSING	BARLEY/WHEATCLEAN	TONS GRAIN PROCESSED
INDUSTRIAL PROCESS	FOOD/AGRICULTURAL	GRAIN PROCESSING	MILO CLEANER	TONS GRAIN PROCESSED
INDUSTRIAL PROCESS	FOOD/AGRICULTURAL	GRAIN PROCESSING	BARLEYFLOUR MILL	TONS GRAIN PROCESSED
INDUSTRIAL PROCESS	FOOD/AGRICULTURAL	GRAIN PROCESSING	WET CORN MILLING	TONS OF PRODUCT
INDUSTRIAL PROCESS	FOOD/AGRICULTURAL	GRAIN PROCESSING	WHEAT FLOUR MILL	TONS PRODUCT
INDUSTRIAL PROCESS	FOOD/AGRICULTURAL	GRAIN PROCESSING	OTHER/NOT CLASFD	TONS PROCESSED
INDUSTRIAL PROCESS	FOOD/AGRICULTURAL	FEED MANUFACTURE	BARLEY FEED-GENL	TONS GRAIN PROCESSED
INDUSTRIAL PROCESS	FOOD/AGRICULTURAL	FEED MANUFACTURE	OTHER/NOT CLASFD	TONS PROCESSED
INDUSTRIAL PROCESS	FOOD/AGRICULTURAL	FERMENTATN-BEER	GRAIN HANDLING	TONS GRAIN PROCESSED
INDUSTRIAL PROCESS	FOOD/AGRICULTURAL	FERMENTATN-BEER	DRYING SPNT GRAIN	TONS GRAIN PROCESSED
INDUSTRIAL PROCESS	FOOD/AGRICULTURAL	FERMENTATION-BEER	BREWING	THOUSANDS OF GALLONS
INDUSTRIAL PROCESS	FOOD/AGRICULTURAL	FERMENTATION-BEER	OTHER/NOT CLASFD	GALLONS PRODUCT
INDUSTRIAL PROCESS	FOOD/AGRICULTURAL	FERMENTATION-BEER	OTHER/NOT CLASFD	TONS GRAIN PROCESSED
INDUSTRIAL PROCESS	FOOD/AGRICULTURAL	FERMENTATN-WHISKY	GRAIN HANDLING	TONS GRAIN PROCESSED
INDUSTRIAL PROCESS	FOOD/AGRICULTURAL	FERMENTATN-WHISKY	DRYING SPNT GRAIN	TONS GRAIN PROCESSED
INDUSTRIAL PROCESS	FOOD/AGRICULTURAL	FERMENTATN-WHISKY	AGING	TONS GRAIN PROCESSED
INDUSTRIAL PROCESS	FOOD/AGRICULTURAL	FERMENTATN-WHISKY	OTHER/NOT CLASFD	GALLONS PRODUCT
INDUSTRIAL PROCESS	FOOD/AGRICULTURAL	FERMENTATN-WINE	GENERAL	GALLONS PRODUCT
INDUSTRIAL PROCESS	FOOD/AGRICULTURAL	FISH MEAL	COOKERS-FRESHFISH	TONS FISH MEAL PRODUCED
INDUSTRIAL PROCESS	FOOD/AGRICULTURAL	FISH MEAL	COOKERS-STALEFISH	TONS FISH MEAL PRODUCED
INDUSTRIAL PROCESS	FOOD/AGRICULTURAL	FISH MEAL	DRIERS	TONS FISH SCRAP
INDUSTRIAL PROCESS	FOOD/AGRICULTURAL	FISH MEAL	OTHER/NOT CLASIFD	TONS PROCESSED
INDUSTRIAL PROCESS	FOOD/AGRICULTURAL	MEAT SMOKING	GENERAL	TONS MEAT SMOKED
INDUSTRIAL PROCESS	FOOD/AGRICULTURAL	STARCH MFG	GENERAL	TONS STARCH PRODUCED
INDUSTRIAL PROCESS	FOOD/AGRICULTURAL	SUGAR CANE PROCES	GENERAL	TONS SUGAR PRODUCED
INDUSTRIAL PROCESS	FOOD/AGRICULTURAL	SUGAR CANE PROCES	OTHER/NOT CLASIFD	TONS PROCESSED
INDUSTRIAL PROCESS	FOOD/AGRICULTURAL	SUGAR BEET PROCESS	DRYER ONLY	TONS RAW BEETS
INDUSTRIAL PROCESS	FOOD/AGRICULTURAL	SUGAR BEET PROCES	OTHER/NOT CLASIFD	TONS RAW BEETS
INDUSTRIAL PROCESS	FOOD/AGRICULTURAL	PEANUT PROCESSING	OIL/NOT CLASFD	TONS PRODUCT
INDUSTRIAL PROCESS	FOOD/AGRICULTURAL	PEANUT PROCESSING	OTHER/NOT CLASFD	TONS PROCESSED
INDUSTRIAL PROCESS	FOOD/AGRICULTURAL	CANDY/CONFECTNRY	OTHER/NOT CLASFD	TONS PRODUCT
INDUSTRIAL PROCESS	FOOD/AGRICULTURAL	DAIRY PRODUCTS	MILK SPRAY-DRYER	TONS PRODUCT
INDUSTRIAL PROCESS	FOOD/AGRICULTURAL	DAIRY PRODUCTS	OTHER/NOT CLASFD	TONS PRODUCT
INDUSTRIAL PROCESS	FOOD/AGRICULTURAL	OTHER/NOT CLASIFD	SPECIFY IN REMARK	TONS PROCESSED (INPUT)
INDUSTRIAL PROCESS	FOOD/AGRICULTURAL	OTHER/NOT CLASIFD	SPECIFY IN REMARK	TONS PRODUCED (FINISHED)
INDUSTRIAL PROCESS	PRIMARY METALS	ALUMINUM ORE-BAUXI	CRUSHING/HANDLING	TONS OF ORE
INDUSTRIAL PROCESS	PRIMARY METALS	AL ORE-ELECROREDN	PREBAKE CELLS	TONS ALUMINUM PRODUCED
INDUSTRIAL PROCESS	PRIMARY METALS	AL ORE-ELECROREDN	HORIZSTD SODERBERG	TONS ALUMINUM PRODUCED
INDUSTRIAL PROCESS	PRIMARY METALS	AL ORE-ELECROREDN	VERTSTD SODERBERG	TONS ALUMINUM PRODUCED
INDUSTRIAL PROCESS	PRIMARY METALS	AL ORE-ELECROREDN	MATERIALS HANDLING	TONS ALUMINUM PRODUCED
INDUSTRIAL PROCESS	PRIMARY METALS	AL ORE-ELECROREDN	ANODE BAKE FURNCE	TONS ALUMINUM PRODUCED
INDUSTRIAL PROCESS	PRIMARY METALS	ALUMINUM OPERATN	OTHER/NOT CLASFD	TONS ALUMINUM PRODUCED
INDUSTRIAL PROCESS	PRIMARY METALS	AL OXE-CALC ALMYD	GENERAL	TONS ALUMINUM PRODUCED
INDUSTRIAL PROCESS	PRIMARY METALS	COKE MET BYPRODUC	GENERAL	TONS COAL CHARGED
INDUSTRIAL PROCESS	PRIMARY METALS	COKE-MET BYPRODUC	OVEN CHARGING	TONS COAL CHARGED

TABLE 2.1-4. (Continued)

NATIONAL EMISSIONS DATA SYSTEM (NEDS)
SOURCE CLASSIFICATION CODE (SCC) REPORT

SCC CATEGORY NAMES

I	II	III	IV	UNITS
INDUSTRIAL PROCESS	PRIMARY METALS	COKE-WET BYPRODUC	OVEN PUSHING	TONS COAL CHARGED
INDUSTRIAL PROCESS	PRIMARY METALS	COKE-WET BYPRODUC	QUENCHING	TONS COAL CHARGED
INDUSTRIAL PROCESS	PRIMARY METALS	COKE-WET BYPRODUC	UNLOADING	TONS COAL CHARGED
INDUSTRIAL PROCESS	PRIMARY METALS	COKE-WET BYPRODUC	UNDERFIRING	TONS COAL CHARGED
INDUSTRIAL PROCESS	PRIMARY METALS	COKE-WET BYPRODUC	OTHER/NOT CLASFD	TONS COAL CHARGED
INDUSTRIAL PROCESS	PRIMARY METALS	COKE WET-BEEHIVE	GENERAL	TONS COAL CHARGED
INDUSTRIAL PROCESS	PRIMARY METALS	COPPER SMELTER	TOTAL/GENERAL	TONS CONCENTRATED ORE
INDUSTRIAL PROCESS	PRIMARY METALS	COPPER SMELTER	ROASTING	TONS CONCENTRATED ORE
INDUSTRIAL PROCESS	PRIMARY METALS	COPPER SMELTER	SMELTING	TONS CONCENTRATED ORE
INDUSTRIAL PROCESS	PRIMARY METALS	COPPER SMELTER	CONVERTING	TONS CONCENTRATED ORE
INDUSTRIAL PROCESS	PRIMARY METALS	COPPER SMELTER	REFINING	TONS CONCENTRATED ORE
INDUSTRIAL PROCESS	PRIMARY METALS	COPPER MINE	ORE DRYER	TONS OF ORE
INDUSTRIAL PROCESS	PRIMARY METALS	COPPER SMELTER	OTHER/NOT CLASFD	TONS CONCENTRATED ORE
INDUSTRIAL PROCESS	PRIMARY METALS	FERALLOY OPEN FNC	50% FESI	TONS PRODUCED
INDUSTRIAL PROCESS	PRIMARY METALS	FERALLOY OPEN FNC	75% FESI	TONS PRODUCED
INDUSTRIAL PROCESS	PRIMARY METALS	FERALLOY OPEN FNC	90% FESI	TONS PRODUCED
INDUSTRIAL PROCESS	PRIMARY METALS	FERALLOY OPEN FNC	SILICON METAL	TONS PRODUCED
INDUSTRIAL PROCESS	PRIMARY METALS	FERALLOY OPEN FNC	SILICOMANGANESE	TONS PRODUCED
INDUSTRIAL PROCESS	PRIMARY METALS	FERROALLOY	SCREENING	TONS PROCESSED
INDUSTRIAL PROCESS	PRIMARY METALS	FERROALLOY	ORE DRYER	TONS PROCESSED
INDUSTRIAL PROCESS	PRIMARY METALS	FERROALLOY	LOWCARB CR-REACTR	TONS PROCESSED
INDUSTRIAL PROCESS	PRIMARY METALS	FERROALLOY	OTHER/NOT CLASFD	TONS PRODUCED
INDUSTRIAL PROCESS	PRIMARY METALS	FERALOY SEMCOVFNC	FERONANGANESE	TONS PRODUCED
INDUSTRIAL PROCESS	PRIMARY METALS	FERALOY COVD FNC	GENERAL	TONS PRODUCED
INDUSTRIAL PROCESS	PRIMARY METALS	IRON PRODUCTION	BLAST FNC-ORECHG	TONS PRODUCED
INDUSTRIAL PROCESS	PRIMARY METALS	IRON PRODUCTION	BLAST FNC-AGLCHG	TONS PRODUCED
INDUSTRIAL PROCESS	PRIMARY METALS	IRON PRODUCTION	SINTERING GENERAL	TONS PRODUCED
INDUSTRIAL PROCESS	PRIMARY METALS	IRON PRODUCTION	ORE-CRUSH/HANDLE	TONS OF ORE
INDUSTRIAL PROCESS	PRIMARY METALS	IRON PRODUCTION	SCARFING	TONS PROCESSED
INDUSTRIAL PROCESS	PRIMARY METALS	IRON PRODUCTION	SAND HANDLING OPN	TONS HANDLED
INDUSTRIAL PROCESS	PRIMARY METALS	IRON PRODUCTION	MOLD OVENS	TONS SAND BAKED
INDUSTRIAL PROCESS	PRIMARY METALS	IRON PRODUCTION	OTHER/NOT CLASFD	TONS PRODUCED
INDUSTRIAL PROCESS	PRIMARY METALS	STEEL PRODUCTION	OPNHEARTH UNLANCE	TONS PRODUCED
INDUSTRIAL PROCESS	PRIMARY METALS	STEEL PRODUCTION	OPNHEARTH NOLNCE	TONS PRODUCED
INDUSTRIAL PROCESS	PRIMARY METALS	STEEL PRODUCTION	BOF-GENERAL	TONS PRODUCED
INDUSTRIAL PROCESS	PRIMARY METALS	STEEL PRODUCTION	ELECT ARC W/LANCE	TONS PRODUCED
INDUSTRIAL PROCESS	PRIMARY METALS	STEEL PRODUCTION	ELECT ARC NOLANCE	TONS PRODUCED
INDUSTRIAL PROCESS	PRIMARY METALS	STEEL PRODUCTION	OTHER/NOT CLASFD	TONS PRODUCED
INDUSTRIAL PROCESS	PRIMARY METALS	LEAD SMELTERS	SINTER/CRUSHING	TONS CONCENTRATED ORE
INDUSTRIAL PROCESS	PRIMARY METALS	LEAD SMELTERS	BLAST FURNACE	TONS CONCENTRATED ORE
INDUSTRIAL PROCESS	PRIMARY METALS	LEAD SMELTERS	REVERB FURNACE	TONS CONCENTRATED ORE
INDUSTRIAL PROCESS	PRIMARY METALS	LEAD SMELTERS	OTHER/NOT CLASFD	TONS CONCENTRATED ORE
INDUSTRIAL PROCESS	PRIMARY METALS	MOLYBNUM MINING	GENERAL	HUNDREDS OF TONS MINED
INDUSTRIAL PROCESS	PRIMARY METALS	MOLYBNUM MILLING	GENERAL	TONS PRODUCT
INDUSTRIAL PROCESS	PRIMARY METALS	MOLYBNUM PROCES	OTHER/NOT CLASIFD	TONS PROCESSED
INDUSTRIAL PROCESS	PRIMARY METALS	TITANIUM PROCESS	CHLORINATION STAT	TONS PRODUCT
INDUSTRIAL PROCESS	PRIMARY METALS	TITANIUM PROCES	OTHER/NOT CLASIFD	TONS PROCESSED
INDUSTRIAL PROCESS	PRIMARY METALS	GOLD	MINING/PROCESSING	TONS ORE
INDUSTRIAL PROCESS	PRIMARY METALS	BARIUM	ORE CRUSH	TONS PROCESSED
INDUSTRIAL PROCESS	PRIMARY METALS	BARIUM	REDUCTN KILN	TONS PROCESSED
INDUSTRIAL PROCESS	PRIMARY METALS	BARIUM	DRYERS/CALCINERS	TONS PROCESSED
INDUSTRIAL PROCESS	PRIMARY METALS	BARIUM	OTHER/NOT CLASFD	TONS PROCESSED
INDUSTRIAL PROCESS	PRIMARY METALS	ZINC SMELTING	GENERAL	TONS PROCESSED
INDUSTRIAL PROCESS	PRIMARY METALS	ZINC SMELTING	ROASTING/MULT-HRTH	TONS PROCESSED
INDUSTRIAL PROCESS	PRIMARY METALS	ZINC SMELTING	SINTERING	TONS PROCESSED
INDUSTRIAL PROCESS	PRIMARY METALS	ZINC SMELTING	HORIZ RETORTS	TONS PROCESSED
INDUSTRIAL PROCESS	PRIMARY METALS	ZINC SMELTING	VERT RETORTS	TONS PROCESSED
INDUSTRIAL PROCESS	PRIMARY METALS	ZINC SMELTING	ELECTROLYTIC PROC	TONS PROCESSED
INDUSTRIAL PROCESS	PRIMARY METALS	ZINC SMELTING	OTHER/NOT CLASFD	TONS PROCESSED
INDUSTRIAL PROCESS	PRIMARY METALS	OTHER/NOT CLASFD	SPECIFY IN REMARK	TONS PRODUCED
INDUSTRIAL PROCESS	SECONDARY METALS	ALUMINUM OPERATN	SWEATINGFURNACE	TONS PRODUCED
INDUSTRIAL PROCESS	SECONDARY METALS	ALUMINUM OPERATN	SMELT-CRUCIBLE	TONS METAL PRODUCED
INDUSTRIAL PROCESS	SECONDARY METALS	ALUMINUM OPERATN	SMELT-REVERB FNC	TONS METAL PRODUCED
INDUSTRIAL PROCESS	SECONDARY METALS	ALUMINUM OPERATN	CHLORINATN STATN	TONS METAL PRODUCED
INDUSTRIAL PROCESS	SECONDARY METALS	ALUMINUM OPERATN	FOIL ROLLING	TONS PRODUCT
INDUSTRIAL PROCESS	SECONDARY METALS	ALUMINUM OPERATN	FOIL CONVERTING	TONS PRODUCED
INDUSTRIAL PROCESS	SECONDARY METALS	ALUMINUM OPERATN	CAN MANUFACTURE	TONS PRODUCED
INDUSTRIAL PROCESS	SECONDARY METALS	ALUMINUM OPERATN	ROLL-DRAW-EXTRUDE	TONS PRODUCED
INDUSTRIAL PROCESS	SECONDARY METALS	ALUMINUM OPERATN	OTHER/NOT CLASFD	TONS PRODUCED
INDUSTRIAL PROCESS	SECONDARY METALS	BRASS/BRONZ MELT	BLAST FNC	TONS CHARGE
INDUSTRIAL PROCESS	SECONDARY METALS	BRASS/BRONZ MELT	CRUCIBLE FNC	TONS CHARGE
INDUSTRIAL PROCESS	SECONDARY METALS	BRASS/BRONZ MELT	CUPOLA FNC	TONS CHARGE
INDUSTRIAL PROCESS	SECONDARY METALS	BRASS/BRONZ MELT	ELECT INDUCTION	TONS CHARGE
INDUSTRIAL PROCESS	SECONDARY METALS	BRASS/BRONZ MELT	REVERB FNC	TONS CHARGE
INDUSTRIAL PROCESS	SECONDARY METALS	BRASS/BRONZ MELT	ROTARY FNC	TONS CHARGE
INDUSTRIAL PROCESS	SECONDARY METALS	BRASS/BRONZ MELT	OTHER/NOT CLASIFD	TONS PRODUCED
INDUSTRIAL PROCESS	SECONDARY METALS	GRAY IRON	CUPOLA	TONS METAL CHARGE
INDUSTRIAL PROCESS	SECONDARY METALS	GRAY IRON	REVERB FNC	TONS METAL CHARGE
INDUSTRIAL PROCESS	SECONDARY METALS	GRAY IRON	ELECT INDUCTION	TONS METAL CHARGE
INDUSTRIAL PROCESS	SECONDARY METALS	GRAY IRON	ANNEALING OPERATN	TONS METAL CHARGE
INDUSTRIAL PROCESS	SECONDARY METALS	GRAY IRON	MISC CAST-FABCTN	TONS PROCESSED
INDUSTRIAL PROCESS	SECONDARY METALS	GRAY IRON	GRINDING-CLEANING	TONS PROCESSED
INDUSTRIAL PROCESS	SECONDARY METALS	GRAY IRON	OTHER/NOT CLASIFD	TONS METAL CHARGE
INDUSTRIAL PROCESS	SECONDARY METALS	LEAD SMELT SEC	POT FURNACE	TONS PROCESSED
INDUSTRIAL PROCESS	SECONDARY METALS	LEAD SMELT SEC	REVERB FNC	TONS PROCESSED
INDUSTRIAL PROCESS	SECONDARY METALS	LEAD SMELT SEC	BLAST/CUPOLA FNC	TONS PROCESSED
INDUSTRIAL PROCESS	SECONDARY METALS	LEAD SMELT SEC	ROTARY REVERB FNC	TONS PROCESSED
INDUSTRIAL PROCESS	SECONDARY METALS	LEAD SMELT SEC	LEAD OXIDE MFG	TONS PROCESSED
INDUSTRIAL PROCESS	SECONDARY METALS	LEAD SMELT SEC	OTHER/NOT CLASIFD	TONS PROCESSED
INDUSTRIAL PROCESS	SECONDARY METALS	LEAD BATTERY	GENERAL	TONS PROCESSED
INDUSTRIAL PROCESS	SECONDARY METALS	LEAD BATTERY	OTHER/NOT CLASIFD	TONS PROCESSED
INDUSTRIAL PROCESS	SECONDARY METALS	MAGNESIUM SEC	POT FURNACE	TONS PROCESSED
INDUSTRIAL PROCESS	SECONDARY METALS	MAGNESIUM SEC	OTHER/NOT CLASIFD	TONS PROCESSED
INDUSTRIAL PROCESS	SECONDARY METALS	STEEL FOUNDRY	ELECTRIC ARC FNC	TONS PROCESSED
INDUSTRIAL PROCESS	SECONDARY METALS	STEEL FOUNDRY	OPEN HEARTH FNC	TONS PROCESSED
INDUSTRIAL PROCESS	SECONDARY METALS	STEEL FOUNDRY	OPEN HEARTH LANCD	TONS PROCESSED
INDUSTRIAL PROCESS	SECONDARY METALS	STEEL FOUNDRY	HEAT-TREAT FNC	TONS PROCESSED
INDUSTRIAL PROCESS	SECONDARY METALS	STEEL FOUNDRY	INDUCTION FURNACE	TONS PROCESSED
INDUSTRIAL PROCESS	SECONDARY METALS	STEEL FOUNDRY	OTHER/NOT CLASIFD	TONS PROCESSED
INDUSTRIAL PROCESS	SECONDARY METALS	ZINC SEC	RETORT FNC	TONS PRODUCED

TABLE 2.1-4. (Continued)

NATIONAL EMISSIONS DATA SYSTEM (NEDS)
SOURCE CLASSIFICATION CODE (SCC) REPORT

SCC CATEGORY NAMES

I	II	III	IV	UNITS
INDUSTRIAL PROCES	SECONDARY METALS	ZINC SEC	HORIZ MUFFLE FNC	TONS PRODUCED
INDUSTRIAL PROCES	SECONDARY METALS	ZINC SEC	POT FURNACE	TONS PRODUCED
INDUSTRIAL PROCES	SECONDARY METALS	ZINC SEC	KETTLE-SWEAT FNC	TONS PRODUCED
INDUSTRIAL PROCES	SECONDARY METALS	ZINC SEC	GALVANIZING KETTL	TONS PRODUCED
INDUSTRIAL PROCES	SECONDARY METALS	ZINC SEC	CALCINING KILN	TONS PRODUCED
INDUSTRIAL PROCES	SECONDARY METALS	ZINC SEC	CONCENTRATE DRYER	TONS PROCESSED
INDUSTRIAL PROCES	SECONDARY METALS	ZINC SEC	REVERB-SWEAT FNC	TONS PRODUCED
INDUSTRIAL PROCES	SECONDARY METALS	ZINC SEC	OTHER/NOT CLASIFD	TONS PROCESSED
INDUSTRIAL PROCES	SECONDARY METALS	MALLEABLE IRON	ANNEALING OPERATN	TONS METAL CHARGE
INDUSTRIAL PROCES	SECONDARY METALS	MALLEABLE IRON	OTHER/NOT CLASIFD	TONS METAL CHARGE
INDUSTRIAL PROCES	SECONDARY METALS	NICKEL	FLUX FURNACE	TONS PROCESSED
INDUSTRIAL PROCES	SECONDARY METALS	NICKEL	OTHER/NOT CLASIFD	TONS PROCESSED
INDUSTRIAL PROCES	SECONDARY METALS	ZIRCONIUM	OXIDE KILN	TONS PROCESSED
INDUSTRIAL PROCES	SECONDARY METALS	ZIRCONIUM	OTHER/NOT CLASIFD	TONS PROCESSED
INDUSTRIAL PROCES	SECONDARY METALS	FURNACE ELECTRODE	CALCINATION	TONS PROCESSED
INDUSTRIAL PROCES	SECONDARY METALS	FURNACE ELECTRODE	MIXING	TONS PROCESSED
INDUSTRIAL PROCES	SECONDARY METALS	FURNACE ELECTRODE	PITCH TREATING	TONS PROCESSED
INDUSTRIAL PROCES	SECONDARY METALS	FURNACE ELECTRODE	BAKE FURNACES	TONS PROCESSED
INDUSTRIAL PROCES	SECONDARY METALS	FURNACE ELECTRODE	OTHER/NOT CLASIFD	TONS PROCESSED
INDUSTRIAL PROCES	SECONDARY METALS	MISC CAST&FABRCTN	SPECIFY IN REMARK	TONS PRODUCED
INDUSTRIAL PROCES	SECONDARY METALS	OTHER/NOT CLASIFD	SPECIFY IN REMARK	TONS PROCESSED
INDUSTRIAL PROCES	MINERAL PRODUCTS	ASPHALT ROOFING	BLOWING OPERATION	TONS SATURATED FELT PRODUCED
INDUSTRIAL PROCES	MINERAL PRODUCTS	ASPHALT ROOFING	DIPPING ONLY	TONS SATURATED FELT PRODUCED
INDUSTRIAL PROCES	MINERAL PRODUCTS	ASPHALT ROOFING	SPRAYING ONLY	TONS SATURATED FELT PRODUCED
INDUSTRIAL PROCES	MINERAL PRODUCTS	ASPHALT ROOFING	DIPPING/SPRAYING	TONS SATURATED FELT PRODUCED
INDUSTRIAL PROCES	MINERAL PRODUCTS	ASPHALT ROOFING	OTHER/NOT CLASIFD	TONS SATURATED FELT PRODUCED
INDUSTRIAL PROCES	MINERAL PRODUCTS	ASPHALTIC CONCRET	ROTARY DRYER	TONS PRODUCED
INDUSTRIAL PROCES	MINERAL PRODUCTS	ASPHALTIC CONCRET	OTHER SOURCES	TONS PRODUCED
INDUSTRIAL PROCES	MINERAL PRODUCTS	ASPHALTIC CONCRET	OTHER/NOT CLASIFD	TONS PRODUCED
INDUSTRIAL PROCES	MINERAL PRODUCTS	BRICK MANUFACTURE	DRYING-RAW MTL	TONS PRODUCED
INDUSTRIAL PROCES	MINERAL PRODUCTS	BRICK MANUFACTURE	GRINDING-RAW MTL	TONS PRODUCED
INDUSTRIAL PROCES	MINERAL PRODUCTS	BRICK MANUFACTURE	STORAGE-RAW MTL	TONS PRODUCED
INDUSTRIAL PROCES	MINERAL PRODUCTS	BRICK MANUFACTURE	CURING GAS FIRED	TONS PRODUCED
INDUSTRIAL PROCES	MINERAL PRODUCTS	BRICK MANUFACTURE	CURING OIL FIRED	TONS PRODUCED
INDUSTRIAL PROCES	MINERAL PRODUCTS	BRICK MANUFACTURE	CURING COAL FIRED	TONS PRODUCED
INDUSTRIAL PROCES	MINERAL PRODUCTS	BRICK MANUFACTURE	OTHER/NOT CLASIFD	TONS PRODUCED
INDUSTRIAL PROCES	MINERAL PRODUCTS	CALCIUM CARBIDE	ELECTRIC FNC	TONS PRODUCED
INDUSTRIAL PROCES	MINERAL PRODUCTS	CALCIUM CARBIDE	CUPE DRYER	TONS PRODUCED
INDUSTRIAL PROCES	MINERAL PRODUCTS	CALCIUM CARBIDE	FNC ROOM VENTS	TONS PRODUCED
INDUSTRIAL PROCES	MINERAL PRODUCTS	CALCIUM CARBIDE	OTHER/NOT CLASIFD	TONS PROCESSED
INDUSTRIAL PROCES	MINERAL PRODUCTS	CASTABLE REFRACTY	RAWMATL DRYER	TONS FEED MATERIAL
INDUSTRIAL PROCES	MINERAL PRODUCTS	CASTABLE REFRACTY	RAWMATL CRUSH/PNC	TONS FEED MATERIAL
INDUSTRIAL PROCES	MINERAL PRODUCTS	CASTABLE REFRACTY	ELECTRIC ARC MELT	TONS FEED MATERIAL
INDUSTRIAL PROCES	MINERAL PRODUCTS	CASTABLE REFRACTY	CURING OVEN	TONS FEED MATERIAL
INDUSTRIAL PROCES	MINERAL PRODUCTS	CASTABLE REFRACTY	MOLD/SHAKEOUT	TONS FEED MATERIAL
INDUSTRIAL PROCES	MINERAL PRODUCTS	CASTABLE REFRACTY	OTHER/NOT CLASIFD	TONS FEED MATERIAL
INDUSTRIAL PROCES	MINERAL PRODUCTS	CEMENT MFG DRY	KILNS	BARRELS CEMENT PRODUCED
INDUSTRIAL PROCES	MINERAL PRODUCTS	CEMENT MFG DRY	DRYERS/GRINDERETC	BARRELS CEMENT PRODUCED
INDUSTRIAL PROCES	MINERAL PRODUCTS	CEMENT MFG DRY	KILNS-OIL FIRED	TONS CEMENT PRODUCED
INDUSTRIAL PROCES	MINERAL PRODUCTS	CEMENT MFG DRY	KILNS-GAS FIRED	TONS CEMENT PRODUCED
INDUSTRIAL PROCES	MINERAL PRODUCTS	CEMENT MFG DRY	KILNS-COAL FIRED	TONS CEMENT PRODUCED
INDUSTRIAL PROCES	MINERAL PRODUCTS	CEMENT MFG DRY	OTHER/NOT CLASIFD	TONS CEMENT PRODUCED
INDUSTRIAL PROCES	MINERAL PRODUCTS	CEMENT MFG WET	KILNS	BARRELS CEMENT PRODUCED
INDUSTRIAL PROCES	MINERAL PRODUCTS	CEMENT MFG WET	DRYERS/GRINDERETC	BARRELS CEMENT PRODUCED
INDUSTRIAL PROCES	MINERAL PRODUCTS	CEMENT MFG WET	KILNS-OIL FIRED	TONS CEMENT PRODUCED
INDUSTRIAL PROCES	MINERAL PRODUCTS	CEMENT MFG WET	KILNS GAS FIRED	TONS CEMENT PRODUCED
INDUSTRIAL PROCES	MINERAL PRODUCTS	CEMENT MFG WET	KILNS-COAL FIRED	TONS CEMENT PRODUCED
INDUSTRIAL PROCES	MINERAL PRODUCTS	CEMENT MFG WET	OTHER/NOT CLASIFD	TONS CEMENT PRODUCED
INDUSTRIAL PROCES	MINERAL PRODUCTS	CERAMIC/CLAY MFG	DRYING	TONS INPUT TO PROCESS
INDUSTRIAL PROCES	MINERAL PRODUCTS	CERAMIC/CLAY MFG	GRINDING	TONS INPUT TO PROCESS
INDUSTRIAL PROCES	MINERAL PRODUCTS	CERAMIC/CLAY MFG	STORAGE	TONS INPUT TO PROCESS
INDUSTRIAL PROCES	MINERAL PRODUCTS	CERAMIC/CLAY MFG	OTHER/NOT CLASIFD	TONS PRODUCED
INDUSTRIAL PROCES	MINERAL PRODUCTS	CLAY/FLYASHSINTER	FLYASH	TONS FINISHED PRODUCT
INDUSTRIAL PROCES	MINERAL PRODUCTS	CLAY/FLYASHSINTER	CLAY/COKE	TONS FINISHED PRODUCT
INDUSTRIAL PROCES	MINERAL PRODUCTS	CLAY/FLYASHSINTER	NATURAL CLAY	TONS FINISHED PRODUCT
INDUSTRIAL PROCES	MINERAL PRODUCTS	CLAY/FLYASHSINTER	OTHER/NOT CLASIFD	TONS PRODUCED
INDUSTRIAL PROCES	MINERAL PRODUCTS	COAL CLEANING	THERM/FLUID BED	TONS COAL DRIED
INDUSTRIAL PROCES	MINERAL PRODUCTS	COAL CLEANING	THERM/FLASH	TONS COAL DRIED
INDUSTRIAL PROCES	MINERAL PRODUCTS	COAL CLEANING	THERM/MULTILOUVRE	TONS COAL DRIED
INDUSTRIAL PROCES	MINERAL PRODUCTS	COAL CLEANING	OTHER/NOT CLASIFD	TONS COAL CLEANED
INDUSTRIAL PROCES	MINERAL PRODUCTS	CONCRETE BATCHING	GENERAL	CUBIC YARDS CONCRETE PRODUCED
INDUSTRIAL PROCES	MINERAL PRODUCTS	CONCRETE BATCHING	ASBEST/CEMNT PDTS	TONS PRODUCT
INDUSTRIAL PROCES	MINERAL PRODUCTS	CONCRETE BATCHING	OTHER/NOT CLASFD	TONS PRODUCT
INDUSTRIAL PROCES	MINERAL PRODUCTS	FIBERGLASS MFG	REVERBFNC-REGENER	TONS MATERIAL PROCESSED
INDUSTRIAL PROCES	MINERAL PRODUCTS	FIBERGLASS MFG	REVERBFNC-RECUPER	TONS MATERIAL PROCESSED
INDUSTRIAL PROCES	MINERAL PRODUCTS	FIBERGLASS MFG	ELECTRIC IND FNC	TONS MATERIAL PROCESSED
INDUSTRIAL PROCES	MINERAL PRODUCTS	FIBERGLASS MFG	FORMING LINE	TONS MATERIAL PROCESSED
INDUSTRIAL PROCES	MINERAL PRODUCTS	FIBERGLASS MFG	CURING OVEN	TONS MATERIAL PROCESSED
INDUSTRIAL PROCES	MINERAL PRODUCTS	FIBERGLASS MFG	OTHER/NOT CLASIFD	TONS PROCESSED
INDUSTRIAL PROCES	MINERAL PRODUCTS	FRIT MFG	ROTARY FNC GENL	TONS CHARGE
INDUSTRIAL PROCES	MINERAL PRODUCTS	FRIT MFG	OTHER/NOT CLASIFD	TONS CHARGED
INDUSTRIAL PROCES	MINERAL PRODUCTS	GLASS MFG	SODALIME GENL FNC	TONS GLASS PRODUCED
INDUSTRIAL PROCES	MINERAL PRODUCTS	GLASS MFG	RAW MAT REC/STORG	TONS PROCESSED
INDUSTRIAL PROCES	MINERAL PRODUCTS	GLASS MFG	BATCHING/MIXING	TONS PROCESSED
INDUSTRIAL PROCES	MINERAL PRODUCTS	GLASS MFG	MOLTEN MOLD TANKS	TONS PROCESSED
INDUSTRIAL PROCES	MINERAL PRODUCTS	GLASS MFG	OTHER/NOT CLASIFD	TONS PRODUCED
INDUSTRIAL PROCES	MINERAL PRODUCTS	GYPSUM MFG	RAW MTL DRYER	TONS THROUGHPUT
INDUSTRIAL PROCES	MINERAL PRODUCTS	GYPSUM MFG	PRIMARY GRINDER	TONS THROUGHPUT
INDUSTRIAL PROCES	MINERAL PRODUCTS	GYPSUM MFG	CALCINER	TONS THROUGHPUT
INDUSTRIAL PROCES	MINERAL PRODUCTS	GYPSUM MFG	CONVEYING	TONS THROUGHPUT
INDUSTRIAL PROCES	MINERAL PRODUCTS	GYPSUM MFG	OTHER/NOT CLASIFD	TONS THROUGHPUT
INDUSTRIAL PROCES	MINERAL PRODUCTS	LIME MFG	PRIMARY CRUSHING	TONS PROCESSED
INDUSTRIAL PROCES	MINERAL PRODUCTS	LIME MFG	SECNDRY CRUSHING	TONS PROCESSED
INDUSTRIAL PROCES	MINERAL PRODUCTS	LIME MFG	CALCINING-VERTKILN	TONS PROCESSED
INDUSTRIAL PROCES	MINERAL PRODUCTS	LIME MFG	CALCINING-ROTYKILN	TONS PROCESSED
INDUSTRIAL PROCES	MINERAL PRODUCTS	LIME MFG	OTHER/NOT CLASIFD	TONS PROCESSED
INDUSTRIAL PROCES	MINERAL PRODUCTS	MINERAL WOOL	CUPOLA	TONS CHARGE
INDUSTRIAL PROCES	MINERAL PRODUCTS	MINERAL WOOL	REVERB FNC	TONS CHARGE
INDUSTRIAL PROCES	MINERAL PRODUCTS	MINERAL WOOL	BLOW CHAMBER	TONS CHARGE
INDUSTRIAL PROCES	MINERAL PRODUCTS	MINERAL WOOL	CURING OVEN	TONS CHARGE

TABLE 2.1-4. (Continued)

NATIONAL EMISSIONS DATA SYSTEM (NEDS)
SOURCE CLASSIFICATION CODE (SCC) REPORT

SCC CATEGORY NAMES

I	II	III	IV	UNITS
INDUSTRIAL	PROCESI MINERAL PRODUCTS	MINERAL WOOL	COOLER	TONS CHARGE
INDUSTRIAL	PROCESI MINERAL PRODUCTS	MINERAL WOOL	OTHER/NOT CLASIFD	TONS PROCESSED
INDUSTRIAL	PROCESI MINERAL PRODUCTS	PERLITE MFG	VERTICAL FNC GEN	TONS CHARGE
INDUSTRIAL	PROCESI MINERAL PRODUCTS	PERLITE MFG	OTHER/NOT CLASIFD	TONS PROCESSED
INDUSTRIAL	PROCESI MINERAL PRODUCTS	PHOSPHATE ROCK	DRYING	TONS PHOSPHATE ROCK
INDUSTRIAL	PROCESI MINERAL PRODUCTS	PHOSPHATE ROCK	GRINDING	TONS PHOSPHATE ROCK
INDUSTRIAL	PROCESI MINERAL PRODUCTS	PHOSPHATE ROCK	TRANSFER/STORAGE	TONS PHOSPHATE ROCK
INDUSTRIAL	PROCESI MINERAL PRODUCTS	PHOSPHATE ROCK	OPEN STORAGE	TONS PHOSPHATE ROCK
INDUSTRIAL	PROCESI MINERAL PRODUCTS	PHOSPHATE ROCK	OTHER/NOT CLASIFD	TONS PROCESSED
INDUSTRIAL	PROCESI MINERAL PRODUCTS	STONE QUARY/PROC	PRIMARY CRUSHING	TONS RAW MATERIAL
INDUSTRIAL	PROCESI MINERAL PRODUCTS	STONE QUARY/PROC	SEC CRUSH/SCREEN	TONS RAW MATERIAL
INDUSTRIAL	PROCESI MINERAL PRODUCTS	STONE QUARY/PROC	TERT CRUSH/SCREEN	TONS RAW MATERIAL
INDUSTRIAL	PROCESI MINERAL PRODUCTS	STONE QUARY/PROC	RECRUSH/SCREENING	TONS RAW MATERIAL
INDUSTRIAL	PROCESI MINERAL PRODUCTS	STONE QUARY/PROC	FINES MILL	TONS RAW MATERIAL
INDUSTRIAL	PROCESI MINERAL PRODUCTS	STONE QUARY/PROC	SCREEN/CONVY/HNDL	TONS PRODUCT
INDUSTRIAL	PROCESI MINERAL PRODUCTS	STONE QUARY/PROC	OPEN STORAGE	TONS PRODUCT STORED
INDUSTRIAL	PROCESI MINERAL PRODUCTS	STONE QUARRY PROC	CUT STONE-GENERAL	TONS PROCESSED
INDUSTRIAL	PROCESI MINERAL PRODUCTS	STONE QUARRY PROC	BLASTING-GENERAL	TONS PROCESSED
INDUSTRIAL	PROCESI MINERAL PRODUCTS	STONE QUARRY PROC	OTHER/NOT CLASIFD	TONS PROCESSED
INDUSTRIAL	PROCESI MINERAL PRODUCTS	SALT MINING	GENERAL	TONS MINED
INDUSTRIAL	PROCESI MINERAL PRODUCTS	POTASH PRODUCTION	MINE-GRIND/DRY	TONS ORE
INDUSTRIAL	PROCESI MINERAL PRODUCTS	POTASH PRODUCTION	OTHER/NOT CLASIFD	TONS PROCESSED
INDUSTRIAL	PROCESI MINERAL PRODUCTS	CALCIUM BORATE	MINING/PROCESSING	TONS PRODUCT
INDUSTRIAL	PROCESI MINERAL PRODUCTS	CALCIUM BORATE	OTHER/NOT CLASIFD	TONS PROCESSED
INDUSTRIAL	PROCESI MINERAL PRODUCTS	MG CARBONATE	MINE/PROCESS	TONS PRODUCT
INDUSTRIAL	PROCESI MINERAL PRODUCTS	MG CARBONATE	OTHER/NOT CLASIFD	TONS PROCESSED
INDUSTRIAL	PROCESI MINERAL PRODUCTS	SAND/GRAVEL	CRUSHING/SCREENIN	TONS PRODUCT
INDUSTRIAL	PROCESI MINERAL PRODUCTS	SAND/GRAVEL	OTHER/NOT CLASIFD	TONS PROCESSED
INDUSTRIAL	PROCESI MINERAL PRODUCTS	DIATOMACOUSERTH	HANDLING	TONS PRODUCT
INDUSTRIAL	PROCESI MINERAL PRODUCTS	DIATOMACOUS EARTH	OTHER/NOT CLASIFD	TONS PROCESSED
INDUSTRIAL	PROCESI MINERAL PRODUCTS	CERAMIC ELECT PTS	OTHER/NOT CLASIFD	TONS PROCESSED
INDUSTRIAL	PROCESI MINERAL PRODUCTS	OTHER/NOT CLASIFD	SPECIFY IN REMARK	TONS PRODUCT
INDUSTRIAL	PROCESI PETROLEUM INDRY	PROCESS HEATER	OIL	1000 BARRELS OIL BURNED
INDUSTRIAL	PROCESI PETROLEUM INDRY	PROCESS HEATER	GAS	1000 CUBIC FEET GAS BURNED
INDUSTRIAL	PROCESI PETROLEUM INDRY	PROCESS HEATER	OIL	1000 GALLONS OIL BURNED
INDUSTRIAL	PROCESI PETROLEUM INDRY	PROCESS HEATER	GAS	MILLION CUBIC FEET BURNED
INDUSTRIAL	PROCESI PETROLEUM INDRY	FLUID CRACKERS	GENERAL (FCC)	1000 BARRELS FRESH FEED
INDUSTRIAL	PROCESI PETROLEUM INDRY	MOV-BED CAT-CRACK	GENERAL (TCC)	1000 BARRELS FRESH FEED
INDUSTRIAL	PROCESI PETROLEUM INDRY	BLOW-DOWN SYSTM	W/CONTROLS	1000 BARRELS REFINERY CAPACITY
INDUSTRIAL	PROCESI PETROLEUM INDRY	BLOW-DOWN SYSTM	W/O CONTROLS	1000 BARRELS REFINERY CAPACITY
INDUSTRIAL	PROCESI PETROLEUM INDRY	PROCESS DRAINS	GEN W/CONTROL	1000 BARRELS WASTE WATER
INDUSTRIAL	PROCESI PETROLEUM INDRY	PROCESS DRAINS	GEN W/O CONTROL	1000 BARRELS WASTE WATER
INDUSTRIAL	PROCESI PETROLEUM INDRY	VACUUM JETS	W/CONTROL	1000 BARRELS VACUUM DISTILLATION
INDUSTRIAL	PROCESI PETROLEUM INDRY	VACUUM JETS	W/O CONTROL	1000 BARRELS VACUUM DISTILLATION
INDUSTRIAL	PROCESI PETROLEUM INDRY	COOLING TOWERS		MILLION GALLONS COOLING WATER
INDUSTRIAL	PROCESI PETROLEUM INDRY	MISCELLANEOUS	PIPE/VALVE-FLANGE	1000 BARRELS REFINERY CAPACITY
INDUSTRIAL	PROCESI PETROLEUM INDRY	MISCELLANEOUS	VESL RELIEF VALVE	1000 BARRELS REFINERY CAPACITY
INDUSTRIAL	PROCESI PETROLEUM INDRY	MISCELLANEOUS	PUMP SEALS	1000 BARRELS REFINERY CAPACITY
INDUSTRIAL	PROCESI PETROLEUM INDRY	MISCELLANEOUS	COMPRESR SEALS	1000 BARRELS REFINERY CAPACITY
INDUSTRIAL	PROCESI PETROLEUM INDRY	MISCELLANEOUS	OTHER-GENL	1000 BARRELS REFINERY CAPACITY
INDUSTRIAL	PROCESI PETROLEUM INDRY	FLARES	NATURAL GAS	MILLIONS OF CUBIC FEET
INDUSTRIAL	PROCESI PETROLEUM INDRY	FLARES	OTHER/NOT CLASIFD	MILLIONS OF CUBIC FEET
INDUSTRIAL	PROCESI PETROLEUM INDRY	SLUDGE CONVERTER	GENERAL	TONS PROCESSED
INDUSTRIAL	PROCESI PETROLEUM INDRY	ASPHALT OXIDIZER	GENERAL	TONS PROCESSED
INDUSTRIAL	PROCESI PETROLEUM INDRY	ASPHALT OXIDIZER	OTHER/NOT CLASIFD	TONS PROCESSED
INDUSTRIAL	PROCESI PETROLEUM INDRY	FLUID CORING	GENERAL	1000 BARRELS FRESH FEED
INDUSTRIAL	PROCESI PETROLEUM INDRY	OTHER/NOT CLASIFD	SPECIFY IN REMARK	TONS PROCESSED
INDUSTRIAL	PROCESI PETROLEUM INDRY	OTHER/NOT CLASIFD	SPECIFY IN REMARK	BARRELS-PROCESSED
INDUSTRIAL	PROCESI WOOD PRODUCTS	SULFATE PULPING	BLOWTNK ACCUMULTR	AIR-DRY TONS UNBLEACHED PULP
INDUSTRIAL	PROCESI WOOD PRODUCTS	SULFATE PULPING	WASHRS/SCREENS	AIR-DRY TONS UNBLEACHED PULP
INDUSTRIAL	PROCESI WOOD PRODUCTS	SULFATE PULPING	MULT-EFFECT EVAP	AIR-DRY TONS UNBLEACHED PULP
INDUSTRIAL	PROCESI WOOD PRODUCTS	SULFATE PULPING	RECVY BOLR/DCEVAP	AIR-DRY TONS UNBLEACHED PULP
INDUSTRIAL	PROCESI WOOD PRODUCTS	SULFATE PULPING	SMELT DISSOLV TNK	AIR-DRY TONS UNBLEACHED PULP
INDUSTRIAL	PROCESI WOOD PRODUCTS	SULFATE PULPING	LIME KILNS	AIR-DRY TONS UNBLEACHED PULP
INDUSTRIAL	PROCESI WOOD PRODUCTS	SULFATE PULPING	TURPENTINE CONDSR	AIR-DRY TONS UNBLEACHED PULP
INDUSTRIAL	PROCESI WOOD PRODUCTS	SULFATE PULPING	FLUIDIZED CALCINER	AIR-DRY TONS UNBLEACHED PULP
INDUSTRIAL	PROCESI WOOD PRODUCTS	SULFATE PULPING	LIQUOR OXIDN TOWR	AIR-DRY TONS UNBLEACHED PULP
INDUSTRIAL	PROCESI WOOD PRODUCTS	SULFATE PULPING	OTHER/NOT CLASIFD	AIR-DRY TONS UNBLEACHED PULP
INDUSTRIAL	PROCESI WOOD PRODUCTS	SULFITE PULPING	LIQUOR RECOVERY	AIR-DRY TONS UNBLEACHED PULP
INDUSTRIAL	PROCESI WOOD PRODUCTS	SULFITE PULPING	SULFITE TOWER	AIR-DRY TONS UNBLEACHED PULP
INDUSTRIAL	PROCESI WOOD PRODUCTS	SULFITE PULPING	DIGESTER	AIR-DRY TONS UNBLEACHED PULP
INDUSTRIAL	PROCESI WOOD PRODUCTS	SULFITE PULPING	SMELT TANK	AIR-DRY TONS UNBLEACHED PULP
INDUSTRIAL	PROCESI WOOD PRODUCTS	SULFITE PULPING	EVAPORATORS	AIR-DRY TONS UNBLEACHED PULP
INDUSTRIAL	PROCESI WOOD PRODUCTS	SULFITE PULPING	PULP DIGESTER	TONS AIR DRY PULP
INDUSTRIAL	PROCESI WOOD PRODUCTS	SULFITE PULPING	OTHER/NOT CLASIFD	TONS AIR DRY PULP
INDUSTRIAL	PROCESI WOOD PRODUCTS	PULPBOARD MFG	PAPERBOARD-GEN	TONS FINISHED PRODUCT
INDUSTRIAL	PROCESI WOOD PRODUCTS	PULPBOARD MFG	FIBERBOARD-GEN	TONS FINISHED PRODUCT
INDUSTRIAL	PROCESI WOOD PRODUCTS	PULPBOARD MFG	OTHER/NOT CLASIFD	TONS FINISHED PRODUCT
INDUSTRIAL	PROCESI WOOD PRODUCTS	PRESSURE TREATING	CREOSOTE	TONS OF WOOD TREATED
INDUSTRIAL	PROCESI WOOD PRODUCTS	PRESSURE TREATING	OTHER/NOT CLASIFD	TONS OF WOOD TREATED
INDUSTRIAL	PROCESI WOOD PRODUCTS	TALLOIL/ROSIN	GENERAL	TONS OF PRODUCT
INDUSTRIAL	PROCESI WOOD PRODUCTS	PLYWOOD/PARTBOARD	VENEER DRYER	TONS PROCESSED
INDUSTRIAL	PROCESI WOOD PRODUCTS	PLYWOOD/PARTBOARD	SANDING	TONS PROCESSED
INDUSTRIAL	PROCESI WOOD PRODUCTS	PLYWOOD/PARTBOARD	OTHER/NOT CLASIFD	TONS PROCESSED
INDUSTRIAL	PROCESI WOOD PRODUCTS	SAWMILL OPERATNS	OTHER/NOT CLASIFD	TONS PROCESSED
INDUSTRIAL	PROCESI WOOD PRODUCTS	EXCELSIOR MFG	OTHER/NOT CLASIFD	TONS PROCESSED
INDUSTRIAL	PROCESI WOOD PRODUCTS	CORK PROCESSING	OTHER/NOT CLASIFD	TONS PROCESSED
INDUSTRIAL	PROCESI WOOD PRODUCTS	FURNITURE MFG	OTHER/NOT CLASIFD	TONS PROCESSED
INDUSTRIAL	PROCESI WOOD PRODUCTS	OTHER/NOT CLASIFD	SPECIFY IN REMARK	TONS PROCESSED
INDUSTRIAL	PROCESI METAL FABRICATION	IRON/STEEL	MISC HARDWARE	TONS OF PRODUCT
INDUSTRIAL	PROCESI METAL FABRICATION	IRON/STEEL	FARM MACHINERY	TONS OF PRODUCT
INDUSTRIAL	PROCESI METAL FABRICATION	IRON/STEEL	OTHER/NOT CLASIFD	TONS PROCESSED
INDUSTRIAL	PROCESI METAL FABRICATION	PLATING OPERATONS	OTHER/NOT CLASIFD	TONS PLATED
INDUSTRIAL	PROCESI METAL FABRICATION	CAN MAKING OPRNS	OTHER/NOT CLASIFD	TONS PRODUCT
INDUSTRIAL	PROCESI METAL FABRICATION	OTHER/NOT CLASIFD	SPECIFY IN REMARK	TONS PROCESSED
INDUSTRIAL	PROCESI LEATHER PRODUCTS	OTHER/NOT CLASIFD	SPECIFY IN REMARK	TONS PROCESSED
INDUSTRIAL	PROCESI TEXTILE MFG	GENERAL FABRICS	YARN PREP/BLEACH	TONS PROCESSED
INDUSTRIAL	PROCESI TEXTILE MFG	GENERAL FABRICS	OTHER/NOT SPECIFD	TONS PROCESSED
INDUSTRIAL	PROCESI TEXTILE MFG	RUBERIZED FABRICS	OTHER/NOT SPECIFD	TONS PROCESSED
INDUSTRIAL	PROCESI TEXTILE MFG	CARPET OPERATNS	OTHER/NOT SPECIFD	TONS PROCESSED

TABLE 2.1-4. (Continued)

NATIONAL EMISSIONS DATA SYSTEM (NEDS)
SOURCE CLASSIFICATION CODE (SCC) REPORT

SCC CATEGORY NAMES

I	II	III	IV	UNITS
INDUSTRIAL PROCES	INPROCESS FUEL	ANTHRACITE COAL	OTHER/NOT CLASIFD	TONS BURNED
INDUSTRIAL PROCES	INPROCESS FUEL	BITUMINOUS COAL	CEMENT KILN	TONS BURNED
INDUSTRIAL PROCES	INPROCESS FUEL	BITUMINOUS COAL	BRICK KILN/DRY	TONS BURNED
INDUSTRIAL PROCES	INPROCESS FUEL	BITUMINOUS COAL	GYPSUM KILN/ETC	TONS BURNED
INDUSTRIAL PROCES	INPROCESS FUEL	BITUMINOUS COAL	COAL DRYERS	TONS BURNED
INDUSTRIAL PROCES	INPROCESS FUEL	BITUMINOUS COAL	OTHER/NOT CLASIFD	TONS BURNED
INDUSTRIAL PROCES	INPROCESS FUEL	RESIDUAL OIL	ASPHALT DRYER	1000 GALLONS BURNED
INDUSTRIAL PROCES	INPROCESS FUEL	RESIDUAL OIL	CEMENT KILN	1000 GALLONS BURNED
INDUSTRIAL PROCES	INPROCESS FUEL	RESIDUAL OIL	LIME KILN	1000 GALLONS BURNED
INDUSTRIAL PROCES	INPROCESS FUEL	RESIDUAL OIL	KAOLIN KILN	1000 GALLONS BURNED
INDUSTRIAL PROCES	INPROCESS FUEL	RESIDUAL OIL	METAL MELTING	1000 GALLONS BURNED
INDUSTRIAL PROCES	INPROCESS FUEL	RESIDUAL OIL	BRICK KILN/DRY	1000 GALLONS BURNED
INDUSTRIAL PROCES	INPROCESS FUEL	RESIDUAL OIL	GYPSUM KILN/ETC	1000 GALLONS BURNED
INDUSTRIAL PROCES	INPROCESS FUEL	RESIDUAL OIL	OTHER/NOT CLASIFD	1000 GALLONS BURNED
INDUSTRIAL PROCES	INPROCESS FUEL	DISTILLATE OIL	ASPHALT DRYER	1000 GALLONS BURNED
INDUSTRIAL PROCES	INPROCESS FUEL	DISTILLATE OIL	CEMENT KILN	1000 GALLONS BURNED
INDUSTRIAL PROCES	INPROCESS FUEL	DISTILLATE OIL	LIME KILN	1000 GALLONS BURNED
INDUSTRIAL PROCES	INPROCESS FUEL	DISTILLATE OIL	KAOLIN KILN	1000 GALLONS BURNED
INDUSTRIAL PROCES	INPROCESS FUEL	DISTILLATE OIL	METAL MELTING	1000 GALLONS BURNED
INDUSTRIAL PROCES	INPROCESS FUEL	DISTILLATE OIL	BRICK KILN/DRY	1000 GALLONS BURNED
INDUSTRIAL PROCES	INPROCESS FUEL	DISTILLATE OIL	GYPSUM KILN/ETC	1000 GALLONS BURNED
INDUSTRIAL PROCES	INPROCESS FUEL	DISTILLATE OIL	OTHER/NOT CLASIFD	1000 GALLONS BURNED
INDUSTRIAL PROCES	INPROCESS FUEL	NATURAL GAS	ASPHALT DRYER	MILLION CUBIC FEET BURNED
INDUSTRIAL PROCES	INPROCESS FUEL	NATURAL GAS	CEMENT KILN	MILLION CUBIC FEET BURNED
INDUSTRIAL PROCES	INPROCESS FUEL	NATURAL GAS	LIME KILN	MILLION CUBIC FEET BURNED
INDUSTRIAL PROCES	INPROCESS FUEL	NATURAL GAS	KAOLIN KILN	MILLION CUBIC FEET BURNED
INDUSTRIAL PROCES	INPROCESS FUEL	NATURAL GAS	METAL MELTING	MILLION CUBIC FEET BURNED
INDUSTRIAL PROCES	INPROCESS FUEL	NATURAL GAS	BRICK KILN/DRYS	MILLION CUBIC FEET BURNED
INDUSTRIAL PROCES	INPROCESS FUEL	NATURAL GAS	GYPSUM KILN ETC	MILLION CUBIC FEET BURNED
INDUSTRIAL PROCES	INPROCESS FUEL	NATURAL GAS	OTHER/NOT CLASIFD	MILLION CUBIC FEET BURNED
INDUSTRIAL PROCES	INPROCESS FUEL	PROCESS GAS	OTHER/NOT CLASIFD	MILLION CUBIC FEET BURNED
INDUSTRIAL PROCES	INPROCESS FUEL	COKE	OTHER/NOT CLASIFD	TONS
INDUSTRIAL PROCES	INPROCESS FUEL	WOOD	OTHER/NOT CLASIFD	TONS BURNED
INDUSTRIAL PROCES	INPROCESS FUEL	OTHER/NOT CLASIFD	SPECIFY IN REMARK	MILLION CUBIC FEET BURNED
INDUSTRIAL PROCES	INPROCESS FUEL	OTHER/NOT CLASIFD	SPECIFY IN REMARK	1000 GALLONS BURNED
INDUSTRIAL PROCES	INPROCESS FUEL	OTHER/NOT CLASIFD	SPECIFY IN REMARK	TONS BURNED
INDUSTRIAL PROCES	OTHER/NOT CLASIFD	SPECIFY IN REMARK		TONS PROCESSED
POINT SC EVAP	CLEANING SOLVENT	DRYCLEANING	PERCHLOREETHYLENE	TONS CLOTHES CLEANED
POINT SC EVAP	CLEANING SOLVENT	DRYCLEANING	STODDARD	TONS CLOTHES CLEANED
POINT SC EVAP	CLEANING SOLVENT	DEGREASING	STODDARD	TONS SOLVENT USED
POINT SC EVAP	CLEANING SOLVENT	DEGREASING	OTHER/NOT CLASIFD	TONS SOLVENT USED
POINT SC EVAP	CLEANING SOLVENT	OTHER/NOT CLASIFD	SPECIFY IN REMARK	TONS SOLVENT USED
POINT SC EVAP	SURFACE COATING	PAINT	GENERAL	TONS COATING
POINT SC EVAP	SURFACE COATING	VARNISH/SHELLAC	GENERAL	TONS COATING
POINT SC EVAP	SURFACE COATING	LACQUER	GENERAL	TONS COATING
POINT SC EVAP	SURFACE COATING	ENAMEL	GENERAL	TONS COATING
POINT SC EVAP	SURFACE COATING	PRIMER	GENERAL	TONS COATING
POINT SC EVAP	SURFACE COATING	OTHER/NOT CLASIFD	SPECIFY IN REMARK	TONS COATING
POINT SC EVAP	PETROLEUM STG	FIXED ROOF	BREATHING-PRODUCT	1000 GALLONS STORAGE CAPACITY
POINT SC EVAP	PETROLEUM STG	FIXED ROOF	BREATHING CRUDE	1000 GALLONS STORAGE CAPACITY
POINT SC EVAP	PETROLEUM STG	FIXED ROOF	WORKING-PRODUCT	1000 GALLONS THROUGHPUT
POINT SC EVAP	PETROLEUM STG	FIXED ROOF	WORKING CRUDE	1000 GALLONS THROUGHPUT
POINT SC EVAP	PETROLEUM STG	FLOATING ROOF	BREATHING PRODUCT	1000 GALLONS STORAGE CAPACITY
POINT SC EVAP	PETROLEUM STG	FLOATING ROOF	WORKING-PRODUCT	1000 GALLONS THROUGHPUT
POINT SC EVAP	PETROLEUM STG	FLOATING ROOF	BREATHING-CRUDE	1000 GALLONS STORAGE CAPACITY
POINT SC EVAP	PETROLEUM STG	FLOATING ROOF	WORKING-CRUDE	1000 GALLONS THROUGHPUT
POINT SC EVAP	PETROLEUM STG	OTHER/NOT CLASIFD	SPECIFY IN REMARK	1000 GAL STORED
POINT SC EVAP	MISC ORGANIC STOR	OTHER/NOT CLASIFD	SPECIFY IN REMARK	TONS STORED
POINT SC EVAP	PRINTING PRESS	DRYERS	GENERAL	TONS SOLVENT
POINT SC EVAP	MISC HC EVAP	OTHER/NOT CLASIFD	SPECIFY IN REMARK	TONS PROCESSED
SOLID WASTE	GOVERNMENT	MUNICIPAL INCIN	MULTIPLE CHAMBER	TONS BURNED
SOLID WASTE	GOVERNMENT	MUNICIPAL INCIN	SINGLE CHAMBER	TONS BURNED
SOLID WASTE	GOVERNMENT	OPEN BURNING DUMP	GENERAL	TONS BURNED
SOLID WASTE	GOVERNMENT	OPEN BURNING DUMP	LANDSCAPE/PRUNING	TONS BURNED
SOLID WASTE	GOVERNMENT	OPEN BURNING DUMP	JET FUEL	HUNDREDS OF GALLONS
SOLID WASTE	GOVERNMENT	INCINERATOR	PATHOLOGICAL	TONS BURNED
SOLID WASTE	GOVERNMENT	INCINERATOR	SLUDGE	TONS DRY SLUDGE
SOLID WASTE	GOVERNMENT	INCINERATOR	CONICAL	TONS BURNED
SOLID WASTE	GOVERNMENT	INCINERATOR	OTHER/NOT CLASIFD	TONS BURNED
SOLID WASTE	GOVERNMENT	AUX.FUEL/NO EMSNS	RESIDUAL OIL	1000 GALLONS
SOLID WASTE	GOVERNMENT	AUX.FUEL/NO EMSNS	DISTILLATE OIL	1000 GALLONS
SOLID WASTE	GOVERNMENT	AUX.FUEL/NO EMSNS	NATURAL GAS	MILLION CUBIC FEET
SOLID WASTE	GOVERNMENT	AUX.FUEL/NO EMSNS	LPG	1000 GALLONS
SOLID WASTE	GOVERNMENT	AUX.FUEL/NO EMSNS	OTHER/NOT CLASIFD	MILLION CUBIC FEET
SOLID WASTE	GOVERNMENT	AUX.FUEL/NO EMSNS	OTHER/NOT CLASIFD	1000 GALLONS
SOLID WASTE	GOVERNMENT	AUX.FUEL/NO EMSNS	OTHER/NOT CLASIFD	TONS
SOLID WASTE	COMM-INST	INCINERATOR GEN	MULTIPLE CHAMBER	TONS BURNED
SOLID WASTE	COMM-INST	INCINERATOR GEN	SINGLE CHAMBER	TONS BURNED
SOLID WASTE	COMM-INST	INCINERATOR GEN	CONTROLLED AIR	TONS BURNED
SOLID WASTE	COMM-INST	INCINERATOR GEN	CONICAL REFUSE	TONS BURNED
SOLID WASTE	COMM-INST	INCINERATOR GEN	CONICAL WOOD	TONS BURNED
SOLID WASTE	COMM-INST	OPEN BURNING	WOOD	TONS BURNED
SOLID WASTE	COMM-INST	APARTMENT INCIN	FLUE FED	TONS BURNED
SOLID WASTE	COMM-INST	APARTMENT INCIN	FLUE FED-MODIFIED	TONS BURNED
SOLID WASTE	COMM-INST	INCINERATOR	PATHOLOGICAL	TONS BURNED
SOLID WASTE	COMM-INST	INCINERATOR	SLUDGE	TONS DRY SLUDGE
SOLID WASTE	COMM-INST	INCINERATOR	OTHER/NOT CLASIFD	TONS BURNED
SOLID WASTE	COMM-INST	AUX.FUEL/NO EMSNS	RESIDUAL OIL	1000 GALLONS
SOLID WASTE	COMM-INST	AUX.FUEL/NO EMSNS	DISTILLATE OIL	1000 GALLONS
SOLID WASTE	COMM-INST	AUX.FUEL/NO EMSNS	NATURAL GAS	MILLION CUBIC FEET
SOLID WASTE	COMM-INST	AUX.FUEL/NO EMSNS	LPG	1000 GALLONS
SOLID WASTE	COMM-INST	AUX.FUEL/NO EMSNS	OTHER/NOT CLASIFD	MILLION CUBIC FEET
SOLID WASTE	COMM-INST	AUX.FUEL/NO EMSNS	OTHER/NOT CLASIFD	1000 GALLONS
SOLID WASTE	COMM-INST	AUX.FUEL/NO EMSNS	OTHER/NOT CLASIFD	TONS
SOLID WASTE	INDUSTRIAL	INCINERATOR	MULTIPLE CHAMBER	TONS BURNED
SOLID WASTE	INDUSTRIAL	INCINERATOR	SINGLE CHAMBER	TONS BURNED
SOLID WASTE	INDUSTRIAL	INCINERATOR	CONTROLLED AIR	TONS BURNED
SOLID WASTE	INDUSTRIAL	INCINERATOR	CONICAL REFUSE	TONS BURNED
SOLID WASTE	INDUSTRIAL	INCINERATOR	CONICAL WOOD	TONS BURNED
SOLID WASTE	INDUSTRIAL	INCINERATOR	OPEN PIT	TONS OF WASTE

TABLE 2.1-4. (Concluded)

NATIONAL EMISSIONS DATA SYSTEM (NEDS)
SOURCE CLASSIFICATION CODE (SCC) REPORT

SCC CATEGORY NAMES

I	II	III	IV	UNITS
SOLID WASTE	INDUSTRIAL	OPEN BURNING	WOOD	TONS BURNED
SOLID WASTE	INDUSTRIAL	OPEN BURNING	REFUSE	TONS BURNED
SOLID WASTE	INDUSTRIAL	OPEN BURNING	AUTO BODY COMPTS	TONS BURNED
SOLID WASTE	INDUSTRIAL	AUTO BODY INCINAT	W/O AFTERBURNER	AUTOS BURNED
SOLID WASTE	INDUSTRIAL	AUTO BODY INCINAT	W/ AFTERBURNER	AUTOS BURNED
SOLID WASTE	INDUSTRIAL	RAIL CAR BURNING	OPEN	CARS BURNED
SOLID WASTE	INDUSTRIAL	INCINERATOR	SLUDGE	TONS DRY SLUDGE
SOLID WASTE	INDUSTRIAL	INCINERATOR	OTHER/NOT CLASIFD	TONS BURNED
SOLID WASTE	INDUSTRIAL	AUX.FUEL/NO EMSNS	RESIDUAL OIL	1000 GALLONS
SOLID WASTE	INDUSTRIAL	AUX.FUEL/NO EMSNS	DISTILLATE OIL	1000 GALLONS
SOLID WASTE	INDUSTRIAL	AUX.FUEL/NO EMSNS	NATURAL GAS	MILLION CUBIC FEET
SOLID WASTE	INDUSTRIAL	AUX.FUEL/NO EMSNS	PROCESS GAS	MILLION CUBIC FEET
SOLID WASTE	INDUSTRIAL	AUX.FUEL/NO EMSNS	L P G	1000 GALLONS
SOLID WASTE	INDUSTRIAL	AUX.FUEL/NO EMSNS	OTHER/NOT CLASIFD	MILLION CUBIC FEET
SOLID WASTE	INDUSTRIAL	AUX.FUEL/NO EMSNS	OTHER/NOT CLASIFD	1000 GALLONS
SOLID WASTE	INDUSTRIAL	AUX.FUEL/NO EMSNS	OTHER/NOT CLASIFD	TONS
Other	Lab Analysis	Other	Not Classified	Specify in Remarks

TABLE 2.1-5. TWO-LETTER STATE ABBREVIATIONS

Alabama	AL	Missouri	MO
Alaska	AK	Montana	MT
Arizona	AZ	Nebraska	NE
Arkansas	AR	Nevada	NV
California	CA	New Hampshire	NH
Canal Zone	CZ	New Jersey	NJ
Colorado	CO	New Mexico	NM
Connecticut	CT	New York	NY
Delaware	DE	North Carolina	NC
District of Columbia	DC	North Dakota	ND
Florida	FL	Ohio	OH
Georgia	GA	Oklahoma	OK
Guam	GU	Oregon	OR
Hawaii	HI	Pennsylvania	PA
Idaho	ID	Puerto Rico	PR
Illinois	IL	Rhode Island	RI
Indiana	IN	South Carolina	SC
Iowa	IA	South Dakota	SD
Kansas	KS	Tennessee	TN
Kentucky	KY	Texas	TX
Louisiana	LA	Utah	UT
Maine	ME	Vermont	VT
Maryland	MD	Virginia	VA
Massachusetts	MA	Virgin Islands	VI
Michigan	MI	Washington	WA
Minnesota	MN	West Virginia	WV
Mississippi	MS	Wisconsin	WI
		Wyoming	WY

TABLE 2.1-6. CONTROL DEVICE DESCRIPTION NOMENCLATURE

Generic Type:

Cyclone
ESP
Wet scrubber
Fabric filter
Other
None

Device Class:

Conventional
Novel
Prototype
Pilot scale

TABLE 2.1-7. DEVICE CATEGORY KEY WORDS

ESP	Cyclone	Wet Scrubber	Fabric Filter
1. Wet	1. Single	1. Plate	1. Continuously cleaned
2. Dry	2. Multiple	2. Massive packing	2. Intermittently cleaned
3. Hotside	3. Recirculating	3. Fibrous packing	3. Reverse air
4. Coldside	4. Mech. rotor	4. Preformed spray	4. Mechanical shake or vibrate
5. Plate		5. Gas atomized spray	5. Hi pressure air
6. Pipe		6. Centrifugal	6. Low pressure air
7. Hi voltage		7. Baffle	7. High temperature
8. Low voltage		8. Impingement and entrainment	8. Other
9. Single chamber		9. Mechanically aided	
10. Double chamber		10. Moving bed	
11. Other		11. Venturi-variable throat	
		12. Combination	

TABLE 2.1-8. DESIGN SPECIFICATION TYPE

ESP	Units	Cyclone	Units
Design volume flow rate	Nm^3/s	Design volume flow rate	Nm^3/s
Design ΔP	cm WC	Design ΔP	cm WC
Design temperature	^oC	Design temperature	^oC
Gross mass design efficiency	%	Gross mass design efficiency	%
Design inlet grain loading	$\mu g/m^3$	Design inlet grain loading	$\mu g/m^3$
Total power consumption	kWh	Total power consumption	kWh
Bulk linear velocity	m/s	Entrance velocity	m/s
Number of sections	number	Number of tubes	number
Design applied voltage	volts	Cyclone diameter	m
Aspect ratio	dimensionless	Length/diameter ratio	dimensionless
Specific collecting area	m^2/m^3	Design pressure (absolute)	mm Hg
Plate area	m^2		
Total ESP length	m		
Total ESP width	m		
Number of baffled sections	number		
Plate height	m		
Plate-plate spacing	m		
Number wires per section	number		
Wire-wire spacing	m		
Wire diameter	cm		
Rapping intensity	m/s		
Design pressure (absolute)	mm Hg		

TABLE 2.1-8. (Concluded)

Scrubber	Units	Fabric Filter	Units
Design volume flow rate	Nm^3/s	Design volume flow rate	Nm^3/s
Design ΔP	cm WC	Design ΔP	cm WC
Design temperature	°C	Design temperature	°C
Gross mass design efficiency	%	Gross mass design efficiency	%
Design inlet grain loading	$\mu g/m^3$	Design inlet grain loading	$\mu g/m^3$
Total power consumption	kWh	Total power consumption	kWh
Inlet gas velocity	m/s	Design air/cloth ratio	m^3/m^2 min
Demister type	text	Number of compartments	number
Design liquid loading	ℓ/m^3	Bag composition	text
Entrainment separator type	text	Bag length	m
Design pressure (absolute)	mm Hg	Design pressure (absolute)	mm Hg

TABLE 2.1-9. DEVICE OPERATING PARAMETER TYPE

ESP	Units	Cyclone	Units
Operating ΔP	cm WC	Operating ΔP	cm WC
Gross mass operating efficiency	%	Gross mass operating efficiency	%
Power consumption	kWh	Power consumption	kWh
Bulk linear velocity	m/s	-	
Applied voltage	volts	-	
Gas pretreatment	text	Gas pretreatment	text
Rapping frequency	number/min	-	
Spark rate	number/min	-	
Current density	(nA/cm^2)	-	
Liquid used	text	-	
Liquid loading	ℓ/min	-	
Number wires per section	number		
Wire-wire spacing	m		
Wire diameter	cm		

Scrubber	Units	Fabric filter	Units
Operating ΔP	cm WC	Operating ΔP	cm WC
Gross mass operating efficiency	%	Gross mass operating efficiency	%
Total power consumption	kWh	Total power consumption	kWh
-		Bag composition	text
Gas pretreatment	text	gas pretreatment	text
Recycle ratio	number	Cleaning frequency	number/min
Liquor recycle characteristics	text	Air/cloth ratio	m^3/m^2 min
Effluent liquid treatment requirement	text	Cloth construction	text
Scrubbing liquor type	name	Cloth weight	gm/m^2
Liquor loading	ℓ/m^3	Cloth thickness	cm

TABLE 2.1-10. CHEMICAL ENTRY CODES

Chemical ID scheme	Entry code
SOTDAT code	S
CAS number	C
Level 1 fraction	F
MEG number	M

TABLE 2.1-11. SAROAD PARTICULATE POLLUTANT CODES

	Code[a]	Chemical Pollutant	Code	Chemical Pollutant	Code	Chemical Pollutant	Code	Chemical Pollutant	Code
General	1	Bromine	2109	Indium	2131	Platinum	2153	Thulium	2175
Particulate (total)	1101	Cadmium	2110	Manganese	2132	Selenium	2154	Rubidium	2176
Organic (total) fraction	1102	Calcium	2111	Iridium	2133	Praseodymium	2155	Ruthenium	2177
Benezene soluble organic fraction	1103	Chromium	2112	Molybdenum	2134	Protactinium	2156	Tungsten	2178
Polynuclear hydrocarbons (heterocyclic)	1104	Cobalt	2113	Krypton	2135	Radium	2157	Uranium	2179
Water soluble organics	1105	Copper	2114	Nickel	2136	Rhenium	2158	Potassium	2180
Aliphatic fraction	1110	Chlorine	2115	Helium	2137	Rhodium	2159	Xenon	2181
Aromatic fraction	1111	Carbon	2116	Lithium	2138	Tin	2160	Ytterbium	2182
Inorganic fraction	1113	Cerium	2117	Lutetium	2139	Titanium	2161	Yttrium	2183
Hydrocarbon fraction	1114	Cesium	2118	Magnesium	2140	Samarium	2162	Sodium	2184
Aldehyde fraction	1115	Dysprosium	2119	Iodine	2141	Scandium	2163	Zirconium	2185
Organic acid fraction	1116	Erbium	2120	Mercury	2142	Vanadium	2164	Group VII Compounds and Ions	22
Inorganic	2	Europium	2121	Gold	2143	Silicon	2165	Bromide ion	2201
Total element (free and combined)	21	Fluorine	2122	Neodymium	2144	Silver	2166	Fluoride ion	2202
Aluminum	2101	Gadolinium	2123	Neon	2145	Zinc	2167	Chloride ion	2203
Antimony	2102	Gallium	2124	Lanthanum	2146	Strontium	2168	Iodide ion	2204
Arsenic	2103	Germanium	2125	Niobium	2147	Sulfur	2169	Chlorate ion	2205
Argon	2104	Iron	2126	Nitrogen	2148	Tantalum	2170	Perchlorate ion	2206
Beryllium	2105	Hafnium	2127	Osmium	2149	Tellurium	2171	Bromate ion	2207
Bismuth	2106	Lead	2128	Oxygen	2150	Terbium	2172	Sodium chloride	2210
Barium	2107	Holmium	2129	Palladium	2151	Thallium	2173	Potassium chloride	2211
Boron	2108	Hydrogen	2130	Phosphorus	2152	Thorium	2174		

a/ These codes are identical to the last four digits of the SAROAD pollutant codes for suspended, respirable, and settled particulates, found in the SAROAD PARAMETER CODING MANUAL (APTD-0633).

TABLE 2.1-11. (Continued)

Chemical Pollutant	Code
Calcium chloride	2212
Ammonium chloride	2213
Aluminum chloride	2214
Sodium bromide	2230
Potassium bromide	2231
Sodium iodide	2250
Potassium iodide	2251
Potassium fluoride	2270
Sodium fluoride	2271
Sodium fluorosilicate	2275
Calcium fluorosilicate	2276
Group V Compounds and Ions	23
Ammonium ion	2301
Cyanide ion	2304
Nitrate ion	2306
Nitrite ion	2309
Hydrazine	2310
Hydrazoic acid	2311
Ammonium chloride	2320
Ammonium nitrate	2321
Ammonium sulfate	2322
Phosphoric acid	2340
Calcium phosphate	2341
Phosphorous penta-sulfide	2342
Phosphorus pentoxide	2343
Phosphate ion	2345
Hydrogen phosphate ion	2346
Dihydrogen phosphate ion	2347
Group VI Compounds and Ions	24
Sulfide ion	2401
Sulfuric acid	2402
Sulfate ion	2403
Thiosulfate ion	2404
Sulfite ion	2410
Ferrous sulfide	2411
Ferric sulfide	2412
Ferrous sulfate	2413
Ferric sulfate	2414
Barium sulfate	2415
Chromium trioxide	2417
Sodium dichromate	2418
Zinc oxide	2430
Aluminum oxide	2431
Water	2450
Group IV Compounds and Ions	25
Carbonate ion	2501
Bicarbonate ion	2502
Carbon boride	2510
Silicon carbide	2511
Silicate ion	2550
Silicon dioxide	2551
Acids and Bases	26
Total acidity H+	2601
Hydrogen ion concentration pH	2602
Nitric acid	2605
Hydrochloric acid	2606
Total alkalinity	2650
Hydroxide ion concentration	2651
Calcium hydroxide	2653
Organo-Metallic Compounds and Ions	27
Miscellaneous	28
Aliphatic Compounds	6
Gross hydrocarbons	61
Hydrocarbons	62
Heptane	6201
Octane	6202
Nonane	6203
Decane	6204
Undecane	6205
Dodecane	6206
Tridecane	6207
Tetradecane	6208
Pentadecane	6209
Hexadecane	6210
Heptadecane	6211
Octadecane	6212
Nonadecane	6213
Eicosane	6214
Hemeicosane	6215
Docosane	6216
Tricosane	6217
Tetracosane	6218
Pentacosane	6219
Hexacosane	6220
Heptacosane	6221
Octacosane	6222
Cyclohexane	6223
Cycloheptane	6224
Cyclooctane	6225
Heptene-1	6226
Octene-1	6227
Alcohols and Ethers	63
Butyl alcohol	6301
iso-Butyl alcohol	6302
sec-Butyl alcohol	6303
tert-Butyl alcohol	6304
n-Amyl alcohol	6305
iso-Amyl alcohol	6306
tert-Amyl alcohol	6307
n-Hexyl alcohol	6308
Cyclohexanol	6309
n-Octyl alcohol	6310
Capryl alcohol (octanol-2)	6311
Decyl alcohol	6312
Lauryl alcohol	6313
Myristyl alcohol	6314
Cetyl alcohol	6315
Stearyl alcohol	6316
Di-n-butyl ether	6340
Di-n-amyl ether	6341
Di-iso-amyl ether	6342
Di-n-Hexyl ether	6343
Di-chloromethyl ether	6344

TABLE 2.1-11. (Continued)

Chemical Pollutant	Code
Di-(β-chloroethyl) ether	6346
Ethylene glycol dimethyl ether	6347
Divinyl ether	6348
Diallyl ether	6349
Carboxylic Acids and Esters	64
Propionic acid	6401
N-Butyric acid	6402
iso-Bytyric acid	6403
n-Valeric acid	6404
Trimethylacetic acid	6405
Caproic acid	6406
n-Heptylic acid	6407
Caprylic acid	6408
Pelargonic acid	6409
Fluoroacetic acid	6410
Chloroacetic acid	6411
Bromoacetic acid	6412
Iodoacetic acid	6413
Dichloroacetic acid	6414
Trichloroacetic acid	6415
α-Chloropropionic acid	6416
β-Chloropropionic acid	6417
Glycolic acid	6418
Lactic acid	6419
Methoxyacetic acid	6420
Thioglycolic acid	6421
Cyanoacetic acid	6422
Glyoxylic acid	6423
Acrylic acid	6425
Vinylacetic acid	6426
Pheynlacetic acid	6427
Formic acid	6428
Acetic acid	6429
Crotonic acid	6430
Oxalic acid	6431
Malonic acid	6432
Succinic acid	6433
Glutaric acid	6434
Adipic acid	6435
Pimelic acid	6436
Suberic acid	6437
Azelaic acid	6438
Sebacic acid	6439
Aldehydes and Ketones	65
Caproaldehyde	6501
Heptaldehyde	6502
Hexanone-2	6504
Hexanone-3	6505
Di-n-propyl ketone	6506
Di-iso-propyl ketone	6507
Di-iso-butyl ketone	6508
Di-n-amyl ketone	6509
Stearone	6510
Chloroacetone	6511
Dichloroacetone	6512
Acetylacetone	6513
Mesityl oxide	6514
Phorone	6515
Cyclohexanone	6516
Acrolein	6517
Other Oxygen Compounds	66
Nitrogen Compounds	67
Tri-n-propylamine	6701
Hexylamine	6702
Laurylamine	6703
Trimethylenediamine	6704
Tetramethylenediamine	6705
Pentamethylenediamine	6706
Hexamethylenediamine	6707
Ethanolamine	6708
Diethanolamine	6709
Triethanolamine	6710
Acrylonitrile	6711
Halogen Compounds	68
Methylene iodide	6801
Bromoform	6802
Carbon tetrabromide	6803
Ethylene dibromide	6804
1,1-Dibromoethane	6805
1,1,2,2-Tetrachloroethane	6806
Hexachloroethane	6807
1,3-Dibromopropane	6808
1,4-Dibromobutane	6809
1,5-Dibromopentane	6810
1,6-Dibromohexane	6811
Miscellaneous	69
Aromatic Compounds	7
Simple and gross hydrocarbons	71
Benzene	7101
Toluene	7102
Ethylbenzene	7103
n-Propylbenzene	7104
iso-Propylbenzene	7105
n-Butylbenzene	7106
sec-Butylbenzene	7107
tert-Butylbenzene	7108
Styrene	7109
Allylbenzene	7110
o-Xylene	7111
m-Xylene	7112
p-Xylene	7113
o-Ethyltoluene	7114
m-Ethyltoluene	7115
p-Ethyltoluene	7116
p-Cymene	7117
o-Diethylbenzene	7118
m-Diethylbenzene	7119
p-Diethylbenzene	7120
1,2,3-Trimethylbenzene (hemimellitene)	7121
1,2,4-Trimethylbenzene (pseudocumene)	7122

TABLE 2.1-11. (Continued)

Chemical Pollutant	Code
1,3,5-Trimethylbenzene (mesitylene)	7123
1,2,3,4-Tetramethylbenzene (prehnitene)	7124
1,2,3,5-Tetramethylbenzene (isodurene)	7125
1,2,4,5-Tetramethylbenzene (durene)	7126
Pentamethylbenzene	7127
Hexamethylbenzene	7128
1,3,5-Triethylbenzene	7129
Diphenylmethane	7131
Triphenylmethane	7132
Tetraphenylmethane	7133
Stilbene	7134
1,1-Diphenylethane	7135
1,2-Diphenylethane	7136
Diphenyl	7137
p-Terphenyl	7138
p-Quaterphenyl	7139
1,3,5-Triphenylbenzene	7140
Naphtalene	7141
α-Methylnaphthalene	7142
β-Methylnaphthalene	7143
Indene	7145
Azulene	7146
Acenaphthene	7147
Acenaphthalene	7148
Fluorene	7149
Phenanthrene	7150
Anthracene	7151
2-Methylanthracene	7152
Complex Hydrocarbons	72
Fluoranthene	7201
8-Methylfluoranthese	7202
Pyrene	7204
1-Methylpyrene	7205
4-Methylpyrene	7206
2,7-Dimethylpyrene	7207
Chrysene	7208
Anthanthrene	7210
Coronene	7211
Perylene	7212
Naphthacene	7213
Benzo(c)phenanthrene	7214
Benzo(a)anthracene	7215
11-h Benzo(b)fluorene	7216
11-h Benzo(a)fluorene	7217
7-h Benzo(c)fluorene	7218
Dibenzo(a,i)fluorene	7219
Benzo(b)fluoranthrene	7220
Benzo(g,h,i)-fluoranthene	7221
Benzo(j)fluoranthene	7222
Benzo(k)fluoranthene	7223
Benzo(e)pyrene	7224
Naphtho(2,3-a)pyrene	7226
Dibenzo(a,e)pyrene	7227
Dibenzo(a,i)pyrene	7228
Dibenzo(a,h)pyrene	7229
Dibenzo(b,h)phenanthrene	7230
Dibenzo(a,h)-anthracene	7231
Tribenzo(a,c,h)-anthracene	7232
Benzo(a)naphthacene	7233
Dibenzo(a,l)-naphthacene	7234
Dibenzo(a,j)-naphthacene	7235
Dibenzo(a,c)-naphthacene	7236
Benzo(g,h,i)-perylene	7237
Dibenzo(b,p,g,r)-perylene	7238
Benzo(a)pyrene	7242
Phenols and Ethers	73
o-Cresol	7301
m-Cresol	7302
p-Cresol	7303
o-Chlorophenol	7304
m-Chlorophenol	7305
p-Chlorophenol	7306
o-Bromophenol	7307
m-Bromophenol	7308
p-Bromophenol	7309
o-Nitrophenol	7310
m-Nitrophenol	7311
p-Nitrophenol	7312
2,4-Dinitrophenol	7313
3,5-Dinitrophenol	7314
Resorcinol	7315
Hydroquinone	7316
Catechol	7317
Pyrogallol	7318
Phloroglucinol	7319
Anisole	7340
Phenetole	7341
Diphenyl ether	7342
o-anisidine	7343
p-Anisidine	7344
Carboxylic Acids and Esters	74
Aldehydes and Ketones	75
Xanthen-9-one	7501
7h-Benzo(d,e)-anthracene-7-one-(benzanthrone)	7502
Phenalen-1-one	7503
Other Oxygen Compounds	76
Nitrogen Compounds	77
Aniline	7701
o-Phenylenediamine	7702
m-Phenylenediamine	7703
p-Phenylenediamine	7704
o-Anisidine	7705
p-Anisidine	7706
o-Chloroaniline	7707
m-Chloroaniline	7708

TABLE 2.1-11. (Concluded)

Chemical Pollutant	Code
p-Chloroaniline	7709
o-Toluidine	7710
m-Toluidine	7711
p-Toluidine	7712
Diphenylamine	7713
Triphenylamine	7714
Benzidine	7715
Halogen Compounds	78
Miscellaneous	79
Heterocyclic Compounds	8
Nitrogen Compounds	81
Pyridine	8101
α-Picoline	8102
β-Picoline	8103
γ-Picoline	8104
Quinoline	8105
Isoquinoline	8106
Quinaldine	8107
Indole	8108
Acridine	8109
Carbazole	8110
Benzo(f)quinoline	8111
Benzo(h)quinoline	8112
Phenanthridine	8113
Benz(a)acridine	8114
Benz(c)acridine	8115
11h-Benzo(a)carbazole	8116
5h-benzo(b)carbazole	8117
7h-Benzo(b)carbazole	8118
Dibenz(a,b)acridine	8119
Dibenz(a,j)acridine	8120
Benzo(l,m,n)phenanthridine	8121
Indeno(1,2,3-i,j)-isoquinoline	8122
9-Acridanone	8123
Oxygen Compounds	82
Benzofuran	8201
Dibenzofuran	8202
Furfural	8203
Sulfur Compounds	83
Nitrogen and Oxygen Compounds	84
Sulfur and Oxygen Compounds	85
Sulfur and Nitrogen Compounds	86
Other	87

TABLE 2.1-12. LIST OF CHEMICAL ANALYSIS CODES

	Analysis Method	Alphabetic Code
1.	Atomic absorption (flame or flameless)	A
2.	Chemiluminescence	B
3.	Conductametric method (specify in comments)	C
4.	Colorimetric method (specify in comments)	D
5.	Electrometric method (coulometry, potentiometry, etc.)	E
6.	Flame ionization	F
7.	Gravimetric method (specify in comments)	G
8.	Infrared absorption (IR)	I
9.	Nondispersive infrared absorption	J
10.	Gas chromatography	K
11.	Thin-layer chromatography	L
12.	Nuclear magnetic resonance (NMR)	M
13.	Neutron activation method	N
14.	Photometric method (e.g., "flame;" specify in comments)	P
15.	Beta gauge (Carbon-12)	Q
16.	Mass spectrographic method (e.g., "spark-source;" specify in comments)	R
17.	Emission spectrographic method (e.g., muffle furnace; specify in comments)	S
18.	Titrimetric (specify in comments)	T
19.	Turbidimetric (e.g., pH meter; specify in comments)	U
20.	"Wet Chemistry" method (e.g., Jacobs Method; specify in comments)	W
21.	Optical evaluation method (e.g., reflectance, transmittance; specify in comments)	X
22.	Other (specify in comments)	Z

TABLE 2.1-13. STANDARD NOMENCLATURE FOR MEASUREMENT EQUIPMENT

Generic Class	Type	Description
Impactor	BRINK BMS-11 IMPACTOR	Conventional Brink sampler (*in situ*) with a precyclone having a 7 μm cut size
	BRINK MODEL B IMPACTOR	*In situ* particle size distribution sampler with five in-line stages
	ANDERSEN MODEL II IMPACTOR	Andersen stack sampler with stainless steel collection plates
	ANDERSEN MODEL III IMPACTOR	Modified Andersen sampler with glass fiber filter collection surface
	MRI MODEL 1502 IMPACTOR	Manufactured by Meteorology Research, Inc.
	ANDERSEN MODEL IV IMPACTOR	Modified Andersen sampler with glass fiber filter collection surfaces and a cyclone precollector
	UW MARK III IMPACTOR	University of Washington cascade impactor manufactured by Pollution Control Systems, Inc.
	TAG IMPACTOR	Multiple slit cascade impactor manufactured by Environmental Research Corporation or Sierra Instruments, Inc.
	OTHER IMPACTOR	Any other impactor, including modified versions of the above
Optical particle counter	ROYCO MODEL - OPC	Manufactured by Royco Instruments, Inc., Menlo Park, California
	CLIMET MODEL - OPC	Manufactured by Climet Instruments, Inc., Sunnyvale, California
	BAUSCH & LOMB MODEL 40-1 - OPC	Manufactured by Bausch & Lomb, Rochester, New York
	OTHER - OPC	As necessary

TABLE 2.1-13. (Concluded)

Generic Class	Type	Description
Condensation nuclei counter	GENERAL ELECTRIC - CNC	Manufactured by General Electric, Pittsfield, Massachusetts
	RICH 100 - CNC	
	OTHER - CNC	
Diffusion battery	CLUSTER TUBE - DIFF BATTERY	
	RECTANGULAR TUBE - DIFF BATTERY	
	CHS - DIFF BATTERY	of David Sinclair design with collimated hole structure
	WIRE SCREEN DIFF BATTERY	Manufactured by Thermo-Systems, Inc.
Electrical analyzer	WHITBY ELECTRICAL ANALYZER, MODEL 3030	Manufactured by Thermo-Systems, Inc.
Miscellaneous	MOBILITY ANALYZER	
	CNC/DIFFUSION BATTERY	CNC used concurrently with a diffusion battery
	CYCLONES	
	COULTER COUNTER	
	SASS TRAIN - WITHOUT CYCLONES	Source Assessment Sampling System measures particulate loading, trace metals and organics
	ELECTRON MICROSCOPE	
	OPTICAL MICROSCOPE	
	SASS TRAIN - WITH CYCLONES	Regular SASS with three separate cyclones included for particle size distribution
Other		Measuring equipment not otherwise classified

2.2 General Instructions for FPEIS Data Input Forms

The FPEIS Standard Data Input Forms are shown in the Appendix. Certain instructions that apply to data coding include the following:

- Zeros are treated as numbers. Blank spaces in a field indicate either a lack of data or that the pertinent data have been coded for the preceding test subseries or test run. All numeric data shall be right-justified and all alphanumeric data shall be left-justified, except where noted otherwise.

- Only specified alphabetical or numerical characters are allowed to be entered in the columns. No unusual marks are to be made in the spaces. No data field headings are to be changed and only data appropriate to the field are to be entered. This rule prevents unnecessary keypunching errors in processing the forms.

- Only the allowed coding values may be entered in columns that require coding symbols.

- Instructions for filling out each card on the form are quite specific and were designed to apply to the large majority of source/control system combinations. Nevertheless, it is recognized that assumptions must occasionally be made to reflect the real, physical situation for an unusual source/control system combination. Care should be taken to make reasonable assumptions that most nearly correspond to the true circumstances for the source/control system combination tested.

- The values used for the subseries process variables and the subseries operating parameters should be nominal values which are representative of the values of these data elements throughout all the runs of the subseries.

- When more than one source is discharging into a control system, the description of one should be given and other data should be indicated in the test series remarks. The criteria is to note the source parameters which affect the physical, chemical, and biological nature of the particulate rather than quantity of particulate.

- When more than one control device is used, use a separate data input Form No. 2 for each control device used. Be sure to give the control device number. Up to three (3) control devices in series may be coded for a given source gas stream.

- When more than one test run is made, use a separate data input Form No. 6 for each run. Be sure to indicate the measurement instrument/method number.

- Whenever the data exceed the available space, it can be given in the remarks or comments of the appropriate level (i.e., test series, subseries, or run remarks). In such cases, however, both the data element and its value should be given and not just the data element value.

- Whenever there are pertinent data for which no data element exists, such data can be given in the remarks of the appropriate level.

- Whenever text items are being completed, care should be exercised to leave no blank cards between completed cards. Also, try to make the text as brief as possible through the use of abbreviations, precise words, and elimination of redundant words. The text should always start at the leftmost column (i.e., left-justified). Table 2.2-1 gives a list of commonly accepted abbreviations which may be used.

- The small triangle between columns represents the decimal point. Enter the fractional decimal digits to the right of the triangle. When ± is indicated at the top of the column, enter either + or - as appropriate.

- Leave all the hatched-out portions blank.

- The following identification data elements must be filled on the first card of every section (data group).

Data Element	Card Columns	Instructions
Test series number	1-5	Enter on all forms.
Subseries number	6-8	Enter on Form Nos. 3 through 6. Blank on Form Nos. 1 and 2.
Run number	9-10	Enter only on Form No. 6. Blank on Form Nos. 1 through 5.

Detailed instructions are given in Section 2.3 for completing each card in the input forms.

TABLE 2.2-1. ABBREVIATIONS FOR STREET DESIGNATORS AND FOR WORDS THAT APPEAR FREQUENTLY IN PLACE NAMES

Word	Abbreviation
Academy	ACAD
Agency	AGNCY
Airport	ARPRT
Alley	ALY
Annex	ANX
Arcade	ARC
Arsenal	ARSL
Avenue	AVE
Bayou	BYU
Beach	BCH
Bend	BND
Big	BG
Black	BLK
Boulevard	BLVD
Bluff	BLF
Bottom	BTM
Branch	BR
Bridge	BRG
Brook	BRK
Burg	BG
Bypass	BYP
Camp	CP
Canyon	CYN
Cape	CPE
Causeway	CWSY
Center	CTR
Central	CTL
Church	CHR
Churches	CHRS
Circle	CIR
City	CY
Clear	CLR
Cliffs	CLFS
Club	CLB
College	CLG
Corner	COR
Corners	CORS
Court	CT
Courts	CTS
Cove	CV
Creek	CRK
Crescent	CRES
Crossing	XING
Dale	DL
Dam	DM
Depot	DPO
Divide	DIV
Drive	DR
East	E
Estates	EST
Expressway	EXPY
Extended	EXT
Extension	EXT
Fall	FL
Falls	FLS
Farms	FRMS
Ferry	FRY
Field	FLD
Fields	FLDS
Flats	FLT
Ford	FRD
Forest	FRST
Forge	FRG
Fork	FRK
Forks	FRKS
Fort	FT
Fountain	FTN
Freeway	FWY
Furnace	FURN
Gardens	GDNS
Gateway	GTWY
Glen	GLN
Grand	GRND
Great	GR
Green	GRN
Ground	GRD
Grove	GRV
Harbor	HBR
Haven	HVN
Heights	HTS
High	HI
Highlands	HGLDS
Highway	HWY
Hill	HL
Hills	HLS
Hollow	HOLW
Hospital	HOSP
Hot	H
House	HSE
Inlet	INLT
Institute	INST
Island	IS
Islands	IS
Isle	IS
Junction	JCT
Key	KY
Knolls	KNLS
Landing	LNDG
Lake	LK
Lakes	LKS
Lane	LN
Light	LGT
Little	LTL
Loaf	LF
Locks	LCKS
Lodge	LDG
Lower	LWR
Minor	MNR
Meadows	MDWS
Meeting	MTG
Memorial	MEM
Middle	MDL
Mile	MLE
Mill	ML
Mills	MLS
Mines	MNS
Mission	MSN
Mound	MND
Mount	MT
Mountain	MTN
National	NAT
Neck	NCK
New	NW
North	N
Orchard	ORCH
Palms	PLMS
Park	PK
Parkway	PKY
Pillar	PLR
Pines	PNES
Place	PL
Plain	PLN
Plains	PLNS
Plaza	PLZ
Port	PRT
Point	PT
Prairie	PR
Ranch	RNCH
Ranches	RNCHS
Rapids	RPDS
Resort	RESRT
Rest	RST
Ridge	RDG
River	RIV
Road	RD
Rock	RK
Rural	R
Saint	ST
Sainte	ST
San	SN
Santa	SN
Sante	SN
School	SCH
Seminary	SMNRY
Shoal	SHL
Shoals	SHLS
Shode	SHD
Shore	SHR
Shores	SHRS
Siding	SDG
South	S
Space Flight Center	SFC
Spring	SPG
Springs	SPGS
Square	SQ
State	ST
Station	STA
Street	ST
Stream	STRM
Sulphur	SLPHR
Summit	SMT
Switch	SWCH
Tannery	TNRY
Tavern	TVRN
Terminal	TERM
Terrace	TER
Ton	TN
Tower	TWR
Town	TWN
Trail	TRL
Trailer	TRLR
Tunnel	TUNL
Turnpike	TPKE
Upper	UPR
Union	UN
University	UNIV
Valley	VLY
Viaduct	VIA
View	VW
Village	VLG
Ville	VL
Vista	VIS
Water	WTR
Wells	WLS
West	W
White	WHT
Works	WKS
Yards	YDS

2.3 Encoding Instructions

This section presents detailed, card-by-card encoding instructions for each FPEIS data element. The discussion is separated into 10 groups corresponding to the major groupings of FPEIS data. The FPEIS Data Input Form number is given for each group, and an example completed form is shown for each group of data.

Each card type has been designated REQUIRED CARD or CARD NOT REQUIRED. This pertains to the minimum data set requirement. Some data, such as control device design and operating parameters and bioassay or chemical analysis, may not be available, and consequently, there would be no data to enter. These cards, as well as those pertaining to comments, are not required to be part of the minimum data set. Other cards may or may not be required depending upon a previous card. For example, the C01 card describes the applied control device. If there is no applied device (i.e., an uncontrolled source), then cards C02-C05 and D05 are not needed. Otherwise, all of these cards must be present.

2.3.1 Section A - Source Description - Form 1

Card Columns	Data Element	Encoding Instructions
CARD A01	(REQUIRED CARD)	
1-5	Test Series Number	Enter the permanent FPEIS test series number, right-justified, as assigned by the FPEIS data base administrator. If such an assignment has not been made, enter a nonzero, sequential number for each test series reported. This number will be used for preliminary identification purposes only.
6-8	Subseries Number	Leave blank.
9-10	Run Number	Leave blank.
11-13	Card Letter and Number	Do not change.
14-15	Special Code	Leave blank.
16-32	SCC I	Enter Source Classification Code I description (source category) as text beginning in Column 16 (see Table 2.1-4). A new code has been added to the NEDS codes for laboratory evaluation of control devices, and more codes may be added later. Note also that the FPEIS requires the word description of NEDS codes rather than numeric codes. Use the exact wording given in Table 2.1-4, left-justified.
33-49	SCC II	As above for SCC II (type of operation). Exact spelling required.
50-66	SCC III	As above for SCC III (feed material class). Exact spelling required.
67-72	Test Series Start Date	Enter integer date as MM-DD-YY. This is the source/control device or field/laboratory test starting date.

Card Columns	Data Element	Encoding Instructions
CARD A01 (continued)		
73-78	Test Series Finish Date	As above for the field/laboratory test finish date. Enter as integer date as MM-DD-YY.
79-80	UTM Zone*	The Universal Transverse Mercator (UTM) is another means of identifying the location of the source. The UTM Zone number, which is indicated on each USGS map, must be cited to locate the coordinates properly. Figure 2.3-1 indicates that Zones 10 through 19 encompass the 48 contiguous states; Zones 1 through 9, Alaska; Zones 19 and 20 Puerto Rico and the Virgin Islands; and Zones 1 through 5, Hawaii. For a complete description of the Universal Transverse Mercator (UTM) system, see the references below.[1-3]

1/ "Universal Transverse Mercator Grid," U.S. Department of the Army, Washington, D.C., Publication No. TM5-241-8, July 1958.

2/ "Universal Transverse Mercator Grid, Zone-to-Zone Transformation Tables," U.S. Department of the Army, Washington, D.C., Publication No. TM5-241-2, June 1957.

3/ Dietz, C. H., and D. S. Adams, "Elements of Map Projection," U.S. Department of Commerce, Washington, D.C., Special Publication No. 68 (1945).

* Leave blank for confidential or proprietary data.

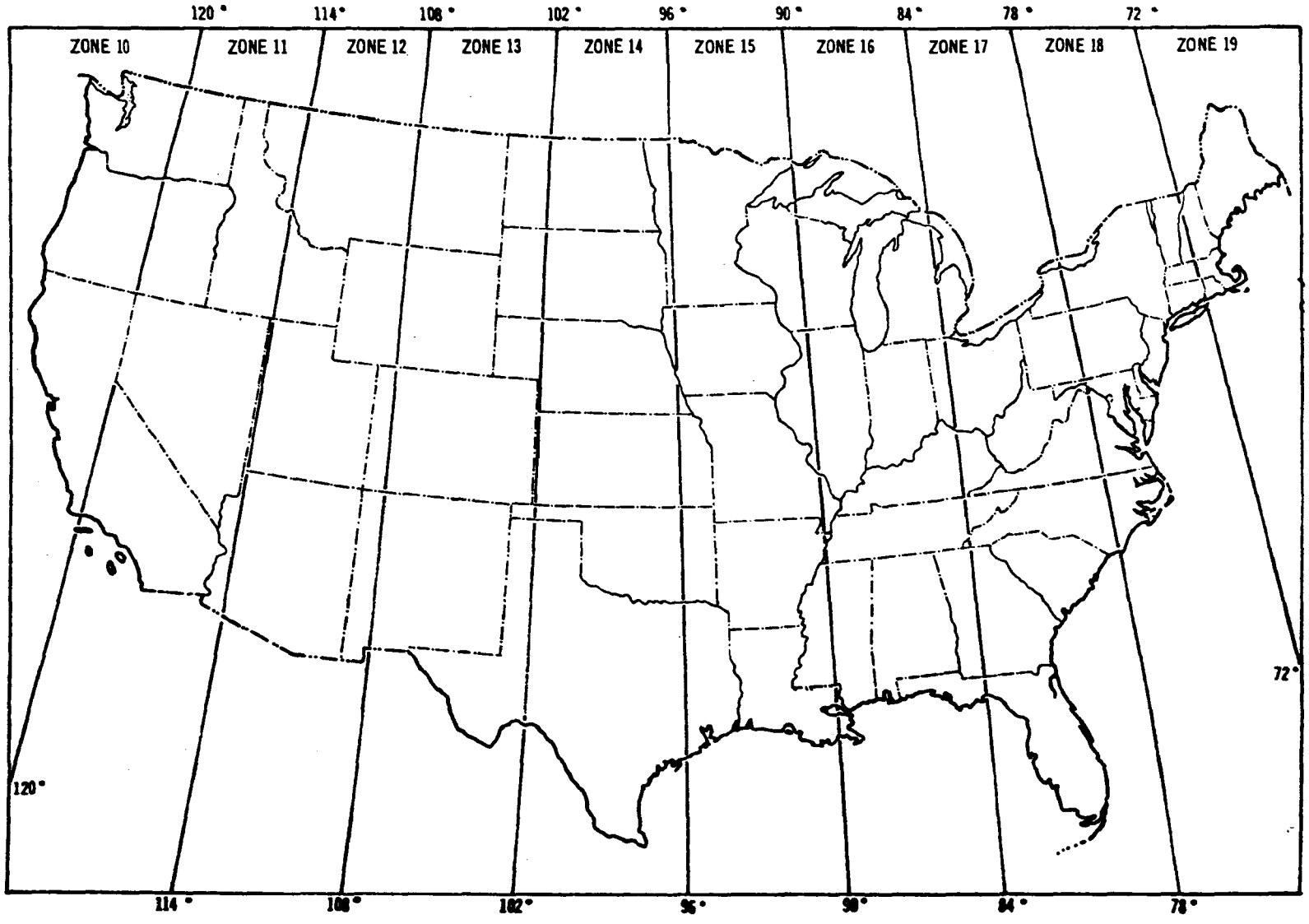

Figure 2.3-1. UTM Grid Zones in the Contiguous United States.

Card Columns	Data Element	Encoding Instructions
CARD A02	(REQUIRED CARD)	
1-10	Data Identification	Leave blank. While punching the cards, the keypuncher will duplicate the first 10 columns of the A01 card.
11-13	Card Number	Do not change.
14-15	Special Codes	Leave blank.
16-35	SCC IV	Source Classification Code IV description (operating mode class) as text beginning Column 16 (see Table 2.1-4).
36-75	Site Name*	The name of the site where the source is located. Enter as text, beginning in Column 36.
76-80	Blank	Leave blank.
CARD A03	(REQUIRED CARD)	
16-40	Source Name*	Name of the source in text.
41-60	Street Address*	Number and name of the street address in text (beginning in Column 41).
61-78	City*	Name of the city, township, or area, beginning in Column 61.
79-80	State	Two-letter code for state in which source is located (see Table 2.1-5). Leave blank if confidential or proprietary.

* Enter CONFIDENTIAL for confidential or proprietary data.

Card Columns	Data Element	Encoding Instructions
CARD A04	(REQUIRED CARD)	
16-20	Zip Code**	Enter the zip code of source location.
21-24	UTM Coords-X**	The Universal Transverse Mercator X-coordinate for the test site. The UTM coordinates are found on USGS maps with scales less than 1:250,000. The 1:24,000 scale is necessary to locate the point source adequately. The decimal point is indicated by the small triangle.*
25-29	UTM Coords-Y**	Enter the Y-coordinate as above.*
30	Blank	Leave blank.
31-80	Tested by	Enter the name of the testing group or company as text.
CARD A05	(REQUIRED CARD)	
16-75	Reference**	Enter report number, date, or cite the journal from which the data were derived as text beginning in card Column 16.

* See references at bottom of page UG-2.3.1-2.

** Leave blank for confidential or proprietary data.

FPEIS

U.S. ENVIRONMENTAL PROTECTION AGENCY
IERL-RTP, Research Triangle Park, N.C. 27711

FINE PARTICLE EMISSIONS INFORMATION SYSTEM
DATA INPUT FORMS

Form 1 9/77

Form Completed by P. Reider

A - SOURCE DESCRIPTION

Test Series No.	Card No.	SCC I (Source Category)	SCC II (Type of Operation)	SCC III (Feed Material Class)	Test Series Start Date Mo Da Yr	Test Series Finish Date Mo Da Yr	UTM Zone
14	A01	EXTCOMB BOILER	ELECTRIC GENERATN	BITUMINOUS COAL	051275	052375	12

Card No.	SCC IV (Operating Mode Class)	Site Name
A02	>100MMBTU PULVDRY	UNION ELECTRIC MERAMEC STATION

Card No.	Source Name	Street	City	State
A03	MERAMEC UNIT 1	1234 RIVER RD	ST. LOUIS	MO

Card No.	Zip	UTM Coords X	UTM Coords Y	Tested By
A04	63102	473039	2110	MIDWEST RESEARCH INSTITUTE

Card No.	Reference
A05	EPA 650/2-74-021, APRIL 1974

Figure 2.3-2. Sample Completed A-Cards--Source Description.

2.3.2 Section B - Test Series Remarks - Form 1

Card Columns	Data Element	Encoding Instructions
CARD B01	(CARD NOT REQUIRED)	
1-10	Data Identification	Same as Card A01.
11-13	Card Identification	Do not change.
14-15	Special Codes	Leave blank.
16-80	Remarks	Enter test series remarks as text.
CARDS B02-B10	(CARDS NOT REQUIRED)	
16-80	Remarks	Test series remarks continued from Card B01.

B - TEST SERIES REMARKS

Test Series No.	Card No.	Remarks in Text
14	B 01	IMPACTØR CUT PØINTS CØMPUTED FRØM RANZ AND WØNG THEØRY
	B 02	
	B 03	
	B 04	
	B 05	
	B 06	
	B 07	
	B 08	
	B 09	
	B 10	

EPA:RTP1412
(Page 1 of 8)

Figure 2.3-3. Sample Completed B-Cards--Test Series Remarks.

2.3.3 Section C - Control Device(s) Characteristics - Form 2

Card Columns	Data Element	Encoding Instructions
CARD C01	(REQUIRED CARD)	
1-10	Data Identification	Same as on Card A01.
11-13	Card Designation	Do not change.
14	Device Number	Enter sequence number (1, 2, or 3) given to the control device. For example, if a control system consists of a cyclone and a spray tower followed by an ESP, there are three control devices in the system. The cyclone is Device No. 1, the spray tower is Device No. 2, and the ESP is Device No. 3. Multiple devices are numbered sequentially from the source.
15	Special Code	Blank.
16-48	Device Category	Enter a descriptive definition of the generic device in text form beginning in Column 16. Use standard nomenclature given in Table 2.1-7.
49-60	Device Class	Enter the device class as text using standard nomenclature given in Table 2.1-6, beginning in Card Column 49.
61-80	Generic Type	Enter the type of generic control device as text beginning in card Column 61. Use only standard nomenclature as given in Table 2.1-6.

Card Columns	Data Element	Encoding Instructions
CARD C02	(REQUIRED CARD)*	
16-45	Commercial Name	Enter the commercial name (and model number) of the control device as text beginning in card Column 16.
46-75	Manufacturer	Enter the name of the device manufacturer as text beginning in card Column 46.
76-80	Blank	Leave blank.
CARD C03	(REQUIRED CARD)*	
16-75	Device Description	Enter a brief description of the device as text which can include the principle of operation, size, shape, modifications to a standard unit, etc. Use abbreviations as much as possible beginning in card Column 16.
76-80	Blank	Leave blank.
CARD C04	(REQUIRED CARD)*	
		The instructions for this card are the same as for Card C03.

* Not required if entry for GENERIC TYPE (C01, CC61-80) is "NONE."

FPEIS

U.S. ENVIRONMENTAL PROTECTION AGENCY
IERL-RTP, Research Triangle Park, N.C. 27711

FINE PARTICLE EMISSIONS INFORMATION SYSTEM
DATA INPUT FORMS

Form 2 9/77

Form Completed by: P. Reider

C - CONTROL DEVICE(S) CHARACTERISTICS

Test Series No.	Card No.	Device No. (1, 2 or 3)	Device Category	Device Class	Generic Type
14	C01	1	CONTINUOUSLY CLEANED REVERSE AIR	PILOT SCALE	FABRIC FILTER

Card No.	Commercial Name	Manufacturer
C02	STEAM-HYDRO SCRUBBER	RESEARCH COTTRELL

Card No.	Device Description
C03	ATOMIZED SPRAY IS SUBJECTED TO ELECTRICAL FIELD FOR CHARGING

Card No.	Device Description (continued)
C04	OF DROPLETS

Figure 2.3-4. Sample Completed C01-C04 Cards--Control Device(s) Characteristics.

Card Columns	Data Element	Encoding Instructions
CARD C05 - Control Device Design Parameters (REQUIRED CARDS)*		
1-10	Data Identification	Same as on Card A01 for the first card and blank for subsequent cards.
11-13	Card Designation	Do not change.
14	Control Device Number	Enter device number (from C01 card).
15	Special Code	Leave blank.
16-17	Serial Number	Enter nonzero, sequential number (starting from 1) for the control device design parameter.
18-47	Design Parameter Specification	Specify in alphanumeric format the design parameter as standard nomenclature from Table 2.1-8 beginning in card Column 18.
48-67	Design Parameter Value	Enter the value of the design parameter and its units as text using the standard nomenclature in Table 2.1-8. Separate the value and units by two (2) blanks. Begin entry of value in card Column 48.
68-80	Blank	Leave blank.

* Not required if entry for GENERIC TYPE (C01, CC61-80) is "NONE."

CONTROL DEVICE(S) DESIGN PARAMETERS

Test Series No.	Card No.	Device No. (1,2 or 3)	Serial No.	Specifications	Value
14	C05	1	01	DESIGN VOLUME	20,000 NM3/MIN
	C05				
	C05				
	C05				
	C05				
	C05				
	C05				
	C05				
	C05				
	C05				
	C05				
	C05				
	C05				
	C05				
	C05				
	C05				
	C05				
	C05				
	C05				

EPA(F.TP)412
(Page 2 of 6)

Figure 2.3-5. Sample Completed C05 Cards--Control Device(s) Design Parameters.

2.3.4 Section D - Test Characteristics - Form 3, Form 4

Card Columns	Data Element	Encoding Instructions
CARD D01	(REQUIRED CARD)	
1-5	Test Series Number	As on Card A01.
6-8	Test Subseries Number	Enter the integer number of the subseries within this test series.
9-10	Blank	Leave blank.
11-13	Card Designation	Do not change.
14	Blank	Leave blank.
15	Control Device Inlet or Outlet	Enter the letter code I for inlet or Ø for outlet. When there is no control device, indicate NONE on Card C01, Columns 61 through 64, and enter I in this column.
16-21	Date	Test subseries starting date entered as integer MM-DD-YY.
22-25	Start Time	Test subseries start time on the basis of 24-hr day (military time).
26-29	Stop Time	Test subseries finish time expressed as above.
30-59	Source Operating Mode	Specify the source operating conditions at the time of the test as text beginning in card Column 30. If the operation of the source is cyclic, then specify the operating mode at the time of test.
60-76	Source Operating Rate	Enter the measured (not designed) operating output rate of the source and the appropriate units as text beginning in card Column 60. Separate the value and unit by one blank.

Card Columns	Data Element	Encoding Instructions
CARD D01 (continued)		
77-80	Percent Design Capacity	Specify the percent of the design capacity at which the source is operating during the time of test. The decimal point is represented by the triangle between Columns 79 and 80.
CARD D02	(CARD NOT REQUIRED)	
16-45	Feed Material	Specify in text (alphanumeric) beginning in card Column 16 the type of source material.
46-80	Feed Material Composition	Specify briefly the major constituents of the feed material as text beginning in card Column 46.
CARD D03	(CARD NOT REQUIRED)	
16-55	Sampling Location Description	Describe the sampling location in terms of duct diameter or meters from the nearest obstruction or bend. Enter any information that affects the sampling and transport of aerosol. Be brief and use abbreviations.
56-61	Volume Flow Rate	Enter the total volume flow rate of effluent gas at the sampling location as a decimal number in units of dry normal m^3/s. The decimal point is implied between Columns 60 and 61.
62-65	Velocity	Enter the velocity of gas at the sampling location as a decimal number in units of m/s. The decimal point is implied between Columns 64 and 65.
66-69	Temperature	Enter the temperature of the gas at the sampling location as an integer number in units of degree Celsius. Right-justify entry to Column 69.

Card Columns	Data Element	Encoding Instructions
CARD D03 (continued)		
70-74	Pressure	Enter the absolute stack pressure at the sampling location as an integer number in units of mm Hg. Right-justify entry to Column 74.
75-77	Percent H_2O	Enter the percent by volume of water vapor at the sampling location as a decimal number. The decimal point is implied between Columns 76 and 77.
78-80	Percent Isokinetic	Enter the percent isokinetic sampling achieved at the sampling location as an integer number right-justified to card Column 80.
CARD D04	(CARD NOT REQUIRED)	
16-19	CO_2	Enter the amount of CO_2 as the percent of total gas on a dry basis as determined by gas analysis as a decimal number. The decimal point is implied between card Columns 17 and 18.
20-23	CO	Enter the amount of CO as the percent of total gas on a dry basis as determined by gas analysis as a decimal number. The decimal point is implied between card Columns 21 and 22.
24-27	O_2	Enter the amount of O_2 as the percent of total gas on a dry basis as determined by gas analysis as a decimal number. The decimal point is implied between card Columns 25 and 26.
28-31	N_2	Enter the amount of N_2 as the percent of total gas on a dry basis as determined by gas analysis as a decimal number. The decimal point is implied between card Columns 29 and 30.
32-80	Trace Gases in PPM	Enter the results of trace gas analysis as text beginning in card Column 32. Enter the chemical symbol followed by a dash and the value in parts per million (ppm). Separate multiple entries by commas. Use subseries remarks for overflow space.

Card Columns	Data Element	Encoding Instructions
CARD D05 - Control Device Operating Parameters (CARD NOT REQUIRED)		
1-10	Data Identification	Encode same as on D01 card.
11-13	Card Designation	Do not change.
14	Device Number	Enter the control device number as defined on Card C01.
15	Special Code	Leave blank.
16-17	Serial Number	When encoding the first subseries, enter the serial number for each of the control device operating parameters. For the second and subsequent subseries, enter the serial number of the operating parameter being entered as given for the first subseries.
18-47	Specification	Enter the control device operating parameter as text using standard nomenclature from Table 2.1-9 beginning in card Column 18. For second and subsequent subseries utilize the labor saving feature explained on page UG-2.1.5-2.
48-67	Value	Enter the value of the control device operating parameter and units, using standard nomenclature from Table 2.1-9, as text beginning in card Column 48. The value and units should be separated by two blank spaces.
68-80	Blank	Leave blank.
CARD D06 - Subseries Remarks (CARD NOT REQUIRED)		
1-10	Data Identification	Same as D05 card.
16-80	Remarks	Enter subseries remarks as text beginning in card Column 16.

FPEIS

U.S. ENVIRONMENTAL PROTECTION AGENCY
IERL-RTP, Research Triangle Park, N.C. 27711

FINE PARTICLE EMISSIONS INFORMATION SYSTEM
DATA INPUT FORMS

Form 3 9/77

Form Completed by P. Reider

D - TEST CHARACTERISTICS

Test Series No.	Sub-series No.	Card No.	Control Device Inlet or Outlet (I or Ø)	Test Subseries	Date Mo	Date Da	Date Yr	Start Time	Stop Time	Source Operating Mode	Source Operating Rate*	% Design Capacity*
14	2	D01	I	05	15	75	12	30	1610	ØXYGEN-LANCING	10 MG/HR	952

Card No.	Feed Material*	Feed Material Composition*
D02	PULVERIZED BITUMINØUS COAL	4.1% S, 10.2% ASH

Card No.	Sampling Location Description*	Volume Flow Rate*	Velocity*	Temp.*	Press.*	% H_2O*	% Iso-kinetic*
D03	10 DUCT DIAMETERS DWNSTRM FRØM 90 D BEND	205	204	61	740174		98

Card No.	CO_2*	CO*	O_2*	N_2*	Trace Gases in ppm (Text)*
D04	12.00	.50	6.00	81.50	SØ2 - 300, MER - 50, CL - 200

Figure 2.3-6. Sample Completed D01-D04 Cards--Test Characteristics.

CONTROL DEVICE(S) OPERATING PARAMETERS

Test Series No.	Sub-series No.	Card No.	Serial No.	Device No. (1, 2 or 3) Specification *	Value *
14	2	D05	1	01 RAPTINS FREQUENCY	2 PER MINUTE
		D05			
		D05			
		D05			
		D05			
		D05			
		D05			
		D05			
		D05			
		D05			
		D05			
		D05			
		D05			
		D05			
		D05			
		D05			
		D05			
		D05			
		D05			

*Need not be filled if the preceding subseries contains the same data; changes or modifications should be entered as necessary. If data or information from preceding subseries is not applicable, use NA or 999; for subseries following use of NA or 999 where data or information is available it must be entered.

EPA(RTP)412
(Page 3 of 8)

FPEIS

U.S. ENVIRONMENTAL PROTECTION AGENCY
IERL-RTP, Research Triangle Park, N.C. 27711

FINE PARTICLE EMISSIONS INFORMATION SYSTEM
DATA INPUT FORMS

Form 4 9/77

Form Completed by P. Reider

CONTROL DEVICE(S) OPERATING PARAMETERS (cont'd)

Test Series No.	Sub-series No.	Card No.	Serial No.	Device No. (1, 2 or 3) Specification *	Value *
		D05			
		D05			
		D05			
		D05			
		D05			
		D05			
		D05			
		D05			
		D05			
		D05			

Figure 2.3-7. Sample Completed D05 Cards--Control Device(s) Operating Parameters.

SUBSERIES REMARKS

Test Series No.	Sub-series No.	Card No.	Remarks in Text*
14	2	D06	GAS VELOCITY DECREASED SLIGHTLY WHEN
		D07	DUCT BYPASS VENT WAS CLOSED
		D08	
		D09	
		D10	
		D11	
		D12	
		D13	
		D14	
		D15	
		D16	
		D17	
		D18	
		D19	
		D20	

Figure 2.3-8. Sample Completed D06-D20 Cards--Subseries Remarks.

2.3.5 Section E - Mass Train Test Results - Form 4

Card Columns	Data Element	Encoding Instructions
CARD E01	(CARD NOT REQUIRED)	
1-8	Data Identification	Same as D01 card.
16-25	Front Half	Enter the mass train front half concentration, in scientific notation, in units of μg per dry normal m^3. The exponent shall be right-justified in card Column 25. The decimal point is specified in card Column 18. (These data include the mass collected in the nozzle and probe wash and the filter.)*
26-35	Total	Enter the total mass concentration as the sum of the front half mass and the impinger. Enter the value, in scientific notation, in units of μg per dry normal m^3. The exponent shall be right-justified in card Column 35. The decimal point is specified in card Column 28.*
36-80	Mass Train Comments	Enter any brief comments on the mass train as text beginning in card Column 36.

* Note that these values are to be entered as exponential numbers with exponents (following the "+") in Columns 24, 25, 34, and 35.

E - PARTICULATE MASS TRAIN RESULTS

Test Series No.	Sub-series No.		Card No.		Front Half	Total	Mass Train Comments (Text)
1 2 3 4 5	6 7 8	9 10	11 12 13	14 15	16 17 18 19 20 21 22 23 24 25	26 27 28 29 30 31 32 33 34 35	36 37 38 39 40 41 42 43 44 45 46 47 48 49 50 51 52 53 54 55 56 57 58 59 60 61 62 63 64 65 66 67 68 69 70 71 72 73 74 75 76 77 78 79 80
14	2		E 0 1		1.240E+02	4.250E+03	MASS Cal. LOW - LEAK BETWEEN FILTER AND METER

Figure 2.3-9. Sample Completed E-Cards--Particulate Mass Train Results.

2.3.6 Section F - Particulate Physical Properties - Form 4

Card Columns	Data Element	Encoding Instruction
CARD F01	(REQUIRED CARD FOR FIRST SUBSERIES)	
1-8	Data Identification	Same as D01.
16-19	Density	Enter density as a decimal number in units of g/cm^3. The decimal point is implied between card Columns 17 and 18. THIS DATA ELEMENT IS REQUIRED.
20	Density Determination	Enter the integer 1 for "measured," 0 for "assumed." THIS DATA ELEMENT IS REQUIRED.
21-27	Resistivity	Enter resistivity, in scientific notation, in units of ohm-cm. The exponent shall be right-justified in card Column 27. The decimal point is specified in card Column 22.
28	Resistivity Determination	Enter the integer 1 for "measured," 0 for "assumed."
29-30	Blank	Leave blank.
31-80	Other Physical Properties	Enter as text beginning in card Column 31 any additional physical properties, values, and units to be reported.

F - PARTICULATE PHYSICAL PROPERTIES

Test Series No.	Sub-series No.	Card No.	Density*	Determination: Resistivity*	Other Physical Properties in Text
14	2	F01	10	14.23+11	SOLUBILITY OF PARTICULATE IN WATER IS 0.4 G/ML

*Need not be filled if the preceding subseries contains the same data; changes or modifications should be entered as necessary. If data or information from preceding subseries is not applicable, use NA or 999; for subseries following use of NA or 999 where data or information is available it must be entered.

EPA(RTP)412
(Page 4 of 6)

Figure 2.3-10. Sample Completed F-Cards--Particulate Physical Properties.

2.3.7 Section G - Particulate Bioassay Data - Form 5a

To be added at a later date.

2.3.8 Section H - Chemical Composition Data - Form 5b

Card Columns	Data Element	Encoding Instructions
CARD H01	(CARD NOT REQUIRED)	
1-8	Data Identification	Same as D01 card.
16-18	Blank	Leave blank.
19	Stokes/Aerodynamic/ Impaction Diameter	Enter the integer 0 for "Stokes" particle diameter, 1 for "aerodynamic" particle diameter, 2 for "impaction" particle diameter.
20	Calibrated or Calculated	Enter the integer 1 for "calibrated" instrument cut diameters, 0 for "calculated" instrument cut diameters.
21-26	Blank	Leave blank.
27-32	Upper Boundary Diameter	Enter the upper boundary diameter value as a decimal number in units of μm. The decimal point is specified in card Column 29.
33-38	Particle Boundary Diameter-1st Stage	Enter the particle boundary diameter value as a decimal number in units of μm. The decimal point is specified.
39-44	Particle Boundary Diameter-2nd Stage	Same as 1st stage.
45-50	Particle Boundary Diameter-3rd Stage	Same as 1st stage.
51-56	Particle Boundary Diameter-4th Stage	Same as 1st stage.
57-62	Particle Boundary Diameter-5th Stage	Same as 1st stage.
63-68	Particle Boundary Diameter-6th Stage	Same as 1st stage.
69-74	Particle Boundary Diameter-7th Stage	Same as 1st stage.
75-80	Particle Boundary Diameter-8th Stage	Same as 1st stage.

Card Columns	Data Element	Encoding Instructions
CARD H02	(CARD NOT REQUIRED)	
16	Entry Code	Enter the chemical entry code which determines the type of chemical ID used. Enter the letter S for SOTDAT code, C for CAS number, F for Level 1 fraction, and M for MEG number.
17-24	Chemical ID	Enter the chemical code number (left-justified) for the element or compound using the standard nomenclature appropriate for the entry code.
25-26	Analysis ID	Enter the code letter(s) (left-justified) for the chemical analysis performed using the standard nomenclature given in Table 2.1-12.
27-32	Mass Train Filter or Pooled Stages	Enter the chemical concentration, as a decimal number, in units of μg/dry normal m^3 for the mass train filter or the pooled stages. The decimal point is specified in card Column 28.
33-38	Chemical Concentration-1st Stage	Enter in scientific notation in units of μg/dry normal m^3. The decimal point is specified in the second column in the field. The sign of the exponent (+ or -) shall be entered in the fifth column, and the value of the exponent as an integer in the seventh column.
39-44	Chemical Concentration-2nd Stage	Same as 1st stage.
45-50	Chemical Concentration-3rd Stage	Same as 1st stage.
51-56	Chemical Concentration-4th Stage	Same as 1st stage.
57-62	Chemical Concentration-5th Stage	Same as 1st stage.

Card Columns	Data Element	Encoding Instructions
CARD H02 (continued)		
63-68	Chemical Concentration-6th Stage	Same as 1st stage.
69-74	Chemical Concentration-7th Stage	Same as 1st stage.
75-80	Chemical Concentration-8th Stage	Same as 1st stage.

H - CHEMICAL COMPOSITION

Stokes/Aerodynamic/Impaction Diameter (0, 1, or 2)
Calib or Calc (1 or 0)

Test Series No.	Sub-series No.	Card No.	Upper Boundary Diameter	①	②	③	④	⑤	⑥	⑦	⑧
14	2	H 0 1	20.000	7.500	3.800	2.300	1.500	.790	.410	.100	.

Particle Boundary Diameter *

Entry Code — Analysis I.D.

Chemical Concentration ($\mu g/m^3$)

Card No.	Chemical I.D.	Mass Train Filter or Pooled Stages	① ±	② ±	③ ±	④ ±	⑤ ±	⑥ ±	⑦ ±	⑧ ±
H 0 2	52103	B	2.14+14	.607+07	.604+04	.104+04	.704+01	.794+04	.814+0	.
H 0 2	52110	A	1.80+24	.00+11	.43+28	.00+11	.10+22	.224+12	.83+1	.
H 0 2	52112	A	1.21+32	.19+23	.99+29	.40+22	.67+32	.24+28	.63+1	.
H 0 2	52113	A	9.20+12	.20+12	.60+12	.40+14	.98+13	.70+03	.30+0	.
H 0 2		.	.	.	.	.	.	.	.	.
H 0 2		.	.	.	.	.	.	.	.	.
H 0 2		.	.	.	.	.	.	.	.	.
H 0 2		.	.	.	.	.	.	.	.	.
H 0 2		.	.	.	.	.	.	.	.	.
H 0 2		.	.	.	.	.	.	.	.	.
H 0 2		.	.	.	.	.	.	.	.	.
H 0 2		.	.	.	.	.	.	.	.	.
H 0 2		.	.	.	.	.	.	.	.	.
H 0 2		.	.	.	.	.	.	.	.	.
H 0 2		.	.	.	.	.	.	.	.	.
H 0 2		.	.	.	.	.	.	.	.	.
H 0 2		.	.	.	.	.	.	.	.	.
H 0 2		.	.	.	.	.	.	.	.	.
H 0 2		.	.	.	.	.	.	.	.	.
H 0 2		.	.	.	.	.	.	.	.	.
H 0 2		.	.	.	.	.	.	.	.	.
H 0 2		.	.	.	.	.	.	.	.	.
H 0 2		.	.	.	.	.	.	.	.	.
H 0 2		.	.	.	.	.	.	.	.	.
H 0 2		.	.	.	.	.	.	.	.	.
H 0 2		.	.	.	.	.	.	.	.	.
H 0 2		.	.	.	.	.	.	.	.	.
H 0 2		.	.	.	.	.	.	.	.	.
H 0 2		.	.	.	.	.	.	.	.	.
H 0 2		.	.	.	.	.	.	.	.	.
H 0 2		.	.	.	.	.	.	.	.	.
H 0 2		.	.	.	.	.	.	.	.	.
H 0 2		.	.	.	.	.	.	.	.	.
H 0 2		.	.	.	.	.	.	.	.	.
H 0 2		.	.	.	.	.	.	.	.	.
H 0 2		.	.	.	.	.	.	.	.	.

*Need not be filled if the preceding subseries contains the same data; changes or modifications should be entered as necessary. If data or information from preceding subseries is not applicable, use NA or 999; for subseries following use of NA or 999 where data or information is available it must be entered.

Note: The stages (or catches) are arranged sequentially in decreasing order of cut diameter sizes for up to a maximum of nine stages. The successive stages may be cyclone, impactor, final filter, etc., depending upon the configuration of the sampling train.

Figure 2.3-11. Sample Completed H-Cards--Chemical Composition Data.

2.3.9 Section I - Measurement Particulars - Form 6

Card Columns	Data Element	Encoding Instructions
CARD I01	(REQUIRED CARD)	
1-5	Test Series Number	Same as on Card A01.
6-8	Subseries Number	Same as Card D01.
9-10	Run Number	Enter the nonzero, sequential integer number of the run.
11-13	Card Designation	Do not change.
14	Measurement Instrument/Method Number	Each of the measurement instrument/methods used for making particle size distribution measurements of a test series is given a nonzero, sequential number. Enter the number of the measurement instrument/method here.
15	Blank	Leave blank.
16-45	Measurement Instrument/Method Name	Enter the name of the measurement instrument/method as text, using the standard nomenclature as given in Table 2.1-14, beginning in Column 16.
46-49	Measurement Start-Time	Enter the integer starting time of measurement with this particular instrument. Use 24-hr clock (military time).
50-54	Sampling Period	Enter the measurement duration (sampling period) for this instrument as a decimal number in minutes. The decimal point is implied between card Columns 53 and 54.
55-60	Aerosol Flow Rate	Enter the sample flow rate as a decimal number in units of liters/minute for this instrument/method. The decimal point is implied between card Columns 58 and 59.

Card Columns	Data Element	Encoding Instructions
CARD I01 (continued)		
61-64	Temperature	Enter the gas temperature at the measurement location (the measurement location may be the sampling location for *in situ* sampling) as an integer number in units of degree Celsius.
65-69	Pressure	Enter the gas pressure at the measurement location (the sampling and measurement locations will be the same for *in situ* sampling) as an integer number in units of mm Hg, right-justified to Column 69.
70-72	Percent H_2O	Enter the percent by volume of water vapor as a decimal number. The decimal point is implied between card Columns 71 and 72.
73-75	Blank	Leave blank.
76-80	Dilution Factor	Enter the ratio of aerosol concentration (either on mass basis or number basis) in the original gas stream to that of measured sample as a decimal number. Enter 1 in card Column 79 if the aerosol is not diluted as is the usual case when sampling with impactors. Distortions in particle size distribution due to the dilution system should be reported in the appropriate remarks. The decimal point is implied between card Columns 79 and 80.

Card Columns	Data Element	Encoding Instructions
CARD I02	(CARD NOT REQUIRED)	
16-20	Measurement Size Range (Lower)	Enter the lower diameter range of the measurement instrument/method as a decimal number in units of µm. The decimal point is implied between card Columns 17 and 18.
21-25	Measurement Size Range (Upper)	Enter the upper diameter range of the measurement instrument/method as a decimal number in units of µm. The decimal point is implied between card Columns 22 and 23.
26-80	Collection Surface/ Substrate and Its Specifications	Enter as text a description of adhesive coating used for impactor sampling, beginning in card Column 26. For instruments for which no collection surface is needed, leave blank.
CARD I03-I05	(CARDS NOT REQUIRED)	
16-80	Comments on the Measurement	Enter as text beginning in card Column 16 all the run level comments. Be brief and use abbreviations wherever possible. Please note if there are comments regarding a measuring instrument which will apply to all runs, enter such comments in subseries remarks.

FPEIS

U.S. ENVIRONMENTAL PROTECTION AGENCY
IERL-RTP, Research Triangle Park, N.C. 27711

FINE PARTICLE EMISSIONS INFORMATION SYSTEM
DATA INPUT FORMS

Form 6 9/77

Form Completed by P. Reider

I - MEASUREMENT PARTICULARS

Test Series No.	Sub-series No.	Run No.	Card No.	Measurement Instrument/Method No. / Measurement Instrument/Method Name**	Meas. Start Time	Sampling Period**	Aerosol Flow Rate**	Gas Conditions at Measurement Location** Temp.	Press.	% H_2O	Dilution Factor**
14	2	2	I01 1	UW MARK III IMPACTOR	1345	456	4.5	42	750	725	10

Card No.	Measurement Size Range** Lower	Upper	Collection Surface/Substrate and its Specifications**
I02	040	2000	GLASS FIBER FILTER, GELMAN, TYPE A

Card No.	Comments on the Measurement**
I03	SUBSTRATE ON STAGE 1 SHOWED WEIGHT
I04	LOSS OF 0.05 MICROG.
I05	

Figure 2.3-12. Sample Completed I-Cards--Measurement Particulars.

2.3.10 Section J - Particulate Size Distribution Data - Form 6

Card Columns	Data Element	Encoding Instructions
CARD J01	(REQUIRED CARD)*	
1-10	Data Identification	Enter test series, test subseries, and test run numbers as on Card I01.
14	Measurement Instrument/Method Number	Enter the same integer as on Card I01, Column 14.
15	Stokes/Aerodynamic/ Impaction Diameter	Enter the integer 0 for "Stokes" particle diameter, 1 for "aerodynamic" particle diameter, 2 for "impaction" particle diameter.
16	Blank	Leave blank.
17-23	Particle Size Data (Upper Boundary Diameter)	Enter the upper boundary particle diameter as a decimal number in units of μm. The decimal point is specified. This value, which depends on the aerosol and the sampling train, is usually estimated (or chosen arbitrarily).
24-25	Blank	Leave blank.
26-31	Particle Size Data (1st Stage Boundary Diameter)	Enter the particle boundary diameter value as a decimal number in units of μm. This and the remaining boundary diameters should be entered in order of decreasing particle diameter. The decimal point is specified. The number of digits reported should represent the precision of the measurement.
32-33	Blank	Leave blank.
34-39	Particle Size Data (2nd Stage Boundary Diameter)	Same as 1st stage.

* At least for the first run of each measurement instrument/method.

Card Columns	Data Element	Encoding Instructions
CARD J01 (continued)		
40-41	Blank	Leave blank.
42-47	Particle Size Data (3rd Stage Boundary Diameter)	Same as 1st stage.
48-49	Blank	Leave blank.
50-55	Particle Size Data (4th Stage Boundary Diameter)	Same as 1st stage.
56-57	Blank	Leave blank.
58-63	Particle Size Data (5th Stage Boundary Diameter)	Same as 1st stage.
64-65	Blank	Leave blank.
66-71	Particle Size Data (6th Stage Boundary Diameter)	Same as 1st stage.
72-73	Blank	Leave blank.
74-79	Particle Size Data (7th Stage Boundary Diameter)	Same as 1st stage.
80	Calibrated or Calculated	Enter the integer 1 for "calibrated" boundary diameters, 0 for "calculated" boundary diameters.
CARDS J02 and J03 (REQUIRED CARDS)*		
14-16	Blank	Leave blank.
17-23	Particle Size Data (Next Stage Boundary Diameter)	Same as 1st stage (if needed).
24-25	Blank	Leave blank.

* At least for the first run of each measurement instrument/method.

Card Columns	Data Element	Encoding Instructions
CARDS J02 and J03 (continued)		
26-31	Particle Size Data (Next Stage Boundary Diameter)	Same as 1st stage (if needed).
32-33	Blank	Leave blank.
34-39	Particle Size Data (Next Stage Boundary Diameter)	Same as 1st stage (if needed).
40-41	Blank	Leave blank.
42-47	Particle Size Data (Next Stage Boundary Diameter)	Same as 1st stage (if needed).
48-49	Blank	Leave blank.
50-55	Particle Size Data (Next Stage Boundary Diameter)	Same as 1st stage (if needed).
56-57	Blank	Leave blank.
58-63	Particle Size Data (Next Stage Boundary Diameter)	Same as 1st stage (if needed).
64-65	Blank	Leave blank.
66-71	Particle Size Data (Next Stage Boundary Diameter)	Same as 1st stage (if needed).
72-73	Blank	Leave blank.
74-79	Particle Size Data (Next Stage Boundary Diameter)	Same as 1st stage (if needed).
80	Blank	Leave blank.
CARD J04	(REQUIRED CARD)	
14	Measurement Instrument/Method Number	Enter the same integer as on I01 and J01, card Column 14.

Card Columns	Data Element	Encoding Instructions
CARD J04 (continued)		
15	Mass/Number	Enter the integer 1 if the instrument/method measures mass and enter 0 if the instrument/method measures number.
16	Blank	Leave blank.
17-23	Mass/Number Concentration-1st Stage	Enter the particle concentration in scientific notation. The decimal point is specified in the second column of the field. The sign of the exponent (either + or -) should be entered in the fifth column and the exponent as an integer (right-justified) in the last two columns. This and subsequent concentration values should be entered in order of decreasing particle diameter. Mass concentration should be expressed in units of μg/dry normal m^3. Number concentration should be expressed in units of number/cm^3. The mass concentration for each stage is calculated by dividing the mass by the total volume (in dry normal m^3) sampled by the instrument.
24	Blank	Leave blank.
25-31	Mass/Number Concentration-2nd Stage	Same as 1st stage.
32	Blank	Leave blank.
33-39	Mass/Number Concentration-3rd Stage	Same as 1st stage.
40	Blank	Leave blank.
41-47	Mass/Number Concentration-4th Stage	Same as 1st stage.
48	Blank	Leave blank.
49-55	Mass/Number Concentration-5th Stage	Same as 1st stage.
56	Blank	Leave blank.

Card Columns	Data Element	Encoding Instructions
CARD J04 (continued)		
57-63	Mass/Number Concentration-6th Stage	Same as 1st stage.
64	Blank	Leave blank.
65-71	Mass/Number Concentration-7th Stage	Same as 1st stage.
72	Blank	Leave blank.
73-79	Mass/Number Concentration-8th Stage	Same as 1st stage.
80	Blank	Leave blank.
CARDS J05 and J06 (REQUIRED CARDS)		
14-16	Blank	Leave blank.
17-23	Mass/Number Concentration-Next Stage	Same as 1st stage (if needed).
24	Blank	Leave blank.
25-31	Mass/Number Concentration-Next Stage	Same as 1st stage (if needed).
32	Blank	Leave blank.
33-39	Mass/Number Concentration-Next Stage	Same as 1st stage (if needed).
40	Blank	Leave blank.
41-47	Mass/Number Concentration-Next Stage	Same as 1st stage (if needed).
48	Blank	Leave blank.
49-55	Mass/Number Concentration-Next Stage	Same as 1st stage (if needed).
56	Blank	Leave blank.
57-63	Mass/Number Concentration-Next Stage	Same as 1st stage (if needed).

Card Columns	Data Element	Encoding Instructions
CARDS J05 and J06 (continued)		
64	Blank	Leave blank.
65-71	Mass/Number Concentration-Next Stage	Same as 1st stage (if needed).
72	Blank	Leave blank.
73-79	Mass/Number Concentration-Next Stage	Same as 1st stage (if needed).
80	Blank	Leave blank.

J - PARTICULATE SIZE DISTRIBUTION DATA

Test Series No.	Sub-series No.	Run No.	Card No.	Measurement Instrument/Method No.	Stokes/Aerodynamic/Impaction Diameter (0, 1, or 2)	Particle Size Data**	Calib or Calc (1 or 0)
14	2	2	J 0 1	11	20.00	113.770	7.500	3.807	2.299	1.545	.7900	.4000
			J 0 2									
			J 0 3									

Card No.	Measurement Instrument/Method No.	Mass/No. (1 or 0)	Mass/No. Data							
J 0 4	11		2.98+06	2.19+05	1.13+05	9.34+04	4.54+04	2.78+04	.8	.20+03	.9
J 0 5											
J 0 6											

**Need not be filled if the preceding subseries or run with this instrument/method contains the same data; changes or modifications should be entered as necessary. If data or information from preceding subseries or run is not applicable, use NA or 999; for subseries or run following use of NA or 999 where data or information is available it must be entered.

EPA(RTP)412
(Page 6 of 6)

Figure 2.3-13. Sample Completed J-Cards--Particulate Size Distribution Data.

SECTION 3

OFF-LINE REQUEST PROCEDURES

Contents

Number	Item	Page
List of Figures		UG-3.0-2
3.0	Introduction	UG-3.0-3
3.1	Submittal of New Data	UG-3.1-1
3.2	Data Retrieval Using System Request Commands	UG-3.2-1
3.3	Special Data Retrieval Requests	UG-3.3-1
3.4	FPEIS User Support	UG-3.4-1

SECTION 3

LIST OF FIGURES

Number	Title	Page
3.1-1	Sample FPEIS Data Submittal Acknowledgement Memo. .	UG-3.1-4
3.1-2	Sample FPEIS Data Submittal Error Memo.	UG-3.1-5
3.1-3	FPEIS Quality Assurance Program	UG-3.1-6

3.0 Introduction

The purpose of this section and the section to follow is to provide users with instructions for submitting new data for entry to the FPEIS and for retrieving existing data from the FPEIS. In particular, Section 3 addresses such procedures for those users who do not have direct access to the EPA National Computer Center at Research Triangle Park, North Carolina. Section 4 will discuss direct interactions with the computer.

It is likely that many users of the FPEIS will have neither the time nor the inclination to pursue the direct access methods described in Section 4. Since federal regulations do not permit the sale of computer services by government data centers like the NCC, most users will not be authorized to access the NCC unless they are under EPA contract. For this reason, procedures have been established which will enable those "off-line" users to retrieve information by written or telephone request instead.

It should be noted that there is no charge for "off-line" data retrieval; however, EPA makes no guarantee regarding the completeness of the data or the promptness of the response. In all likelihood, simple data requests will be processed quickly, but the staff response will depend upon their current work load and on the complexity of the request. Special data requests which require computer program development will take longer. Requesters will be appraised of any expected delays.

3.1 Submittal of New Data

All new source testing data for the FPEIS should be sent to the EPA project officer, IERL/RTP, for input to the data base. These data must be encoded on the FPEIS Data Input Forms in accordance with the data input instructions described previously, and punched on computer cards where directed. The user shall also send a cover letter identifying each test series, subseries, and run in the data set submitted.

Remember: Unique Test Series Numbers will be assigned to each series by the FPEIS data base administrator from a master file listing.

Data for input to the FPEIS data base should be sent to the following address:

FPEIS Project Officer
U.S. Environmental Protection Agency
Special Studies Staff (MD-63)
Industrial Environmental Research Laboratory
Research Triangle Park, North Carolina 27711

When the data set has been received by IERL/RTP, a letter of acknowledgement will be sent to the submitter (see Figure 3.1-1). The letter will also identify the unique Test Series Number(s) assigned to his data set.

In some instances, however, the Test Series Number(s) may be preassigned to a submitter prior to the encoding of the data. Usually a block (or range) of Test Series Numbers will be preassigned to a submitter when several potential test series have been identified from one submitter.

The user is requested to exhibit care in the preparing of the data forms in order to minimize the encoding of errors. Furthermore, all punched cards submitted must be verified prior to submitting them. While it is not expected that all data sets submitted will be error free, those which have been encoded sloppily or not verified will be returned to the submitter for correction (see Figure 3.1-2). In most cases, though, the corrections will be implemented by the FPEIS Support Staff, subject to verification by the encoder.

Figure 3.1-3 shows the principal steps in the FPEIS quality assurance (QA) program for new data. Data are received and acknowledged by the FPEIS Data Base Administrator at Research Triangle Park. The data are then loaded into a special edit file in the NCC UNIVAC 1100 computer. The edit checking of the data are done by the FPEIS Support Staff (Midwest Research Institute). The Support Staff will work directly with the data submitter to implement any necessary changes to the test series. Ultimate approval for the data are the responsibility of the submitter. No data will be entered into the data base until the submitter is satisfied with the data as shown on the EDIT report. The EDIT program, which produces the EDIT report for user review, takes the data submitted and adds automatically all repeating data, blank cards, etc., in addition to checking for proper encoding and formatting of data. The EDIT report produces a list of all the data submitted in SERIES report format (see Section 6.2 for example) and a list of all of the card images in the data set.

After the data have been approved by the user for final verification, the FPEIS UPDATE program will be used to load the data into the data base. Once loaded, the data will be printed in a SERIES report and sent to the user for his records. Then, and only then, will the test series be available for public access.

Dr. John A. Doe
Ozone National Laboratory
1234 Anystreet Drive
Hometown, PA 12345

Dear Dr. Doe:

This letter is to acknowledge our receipt of source testing data for the Fine Particle Emissions Information System (FPEIS) from you. The data forms have been examined and have been found to be acceptable for input to the FPEIS database.

In a short time, we will return to you a print-out containing the data which you have submitted for your review and comment. The test series numbers which have been assigned to your data are: 61, 62, 63, and 64.

Thank you very much for your support of the FPEIS. Please feel free to call me if you have any questions.

Sincerely,

FPEIS Project Officer
Special Studies Staff

Figure 3.1-1. Sample FPEIS Data Submittal Acknowledgment Memo.

Dr. John A. Doe
Ozone National Laboratory
1234 Anystreet Drive
Hometown, PA 12345

Dear Dr. Doe:

This letter is to acknowledge our receipt of source testing data from you for the Fine Particle Emissions Information System (FPEIS). The data forms have been examined and several omissions of key data were noted. We are returning the data forms to you for correction. The omitted data items have been noted on the data forms.

If you have any questions regarding the data forms, please feel free to call me. Thank you very much for your support of the FPEIS.

Sincerely,

FPEIS Project Officer
Special Studies Staff

Figure 3.1-2. Sample FPEIS Data Submittal Error Memo.

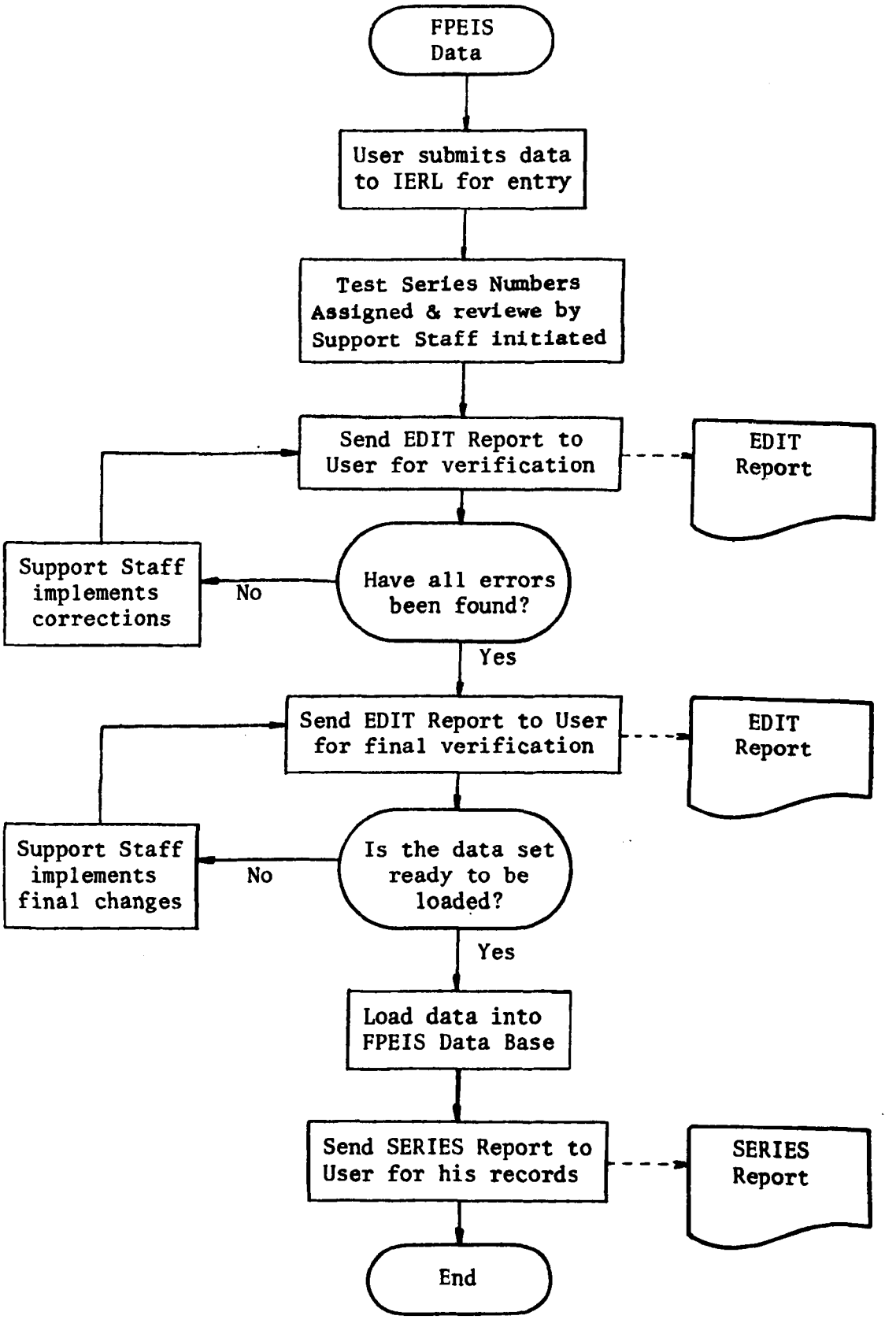

Figure 3.1-3. FPEIS Quality Assurance Program

3.2 Data Retrieval Using System Request Commands

The simplest method of retrieving data for an off-line user is to request one of the System Request Commands (SRC's). Section 5 contains a catalog of System Request Commands which may be utilized to retrieve FPEIS data in a specified manner. Each request command is described separately and has its own requirements for data input or qualification by the user. To simplify their use, the SRC's have been numbered sequentially. In this way, the user needs only to identify the command number in order to request a certain procedure, and to supply any required qualification data.

FPEIS SRC's may be requested by off-line users by telephone or in writing. The requester should supply all information in accordance with the requirements of the System Request Command and send the completed request to the following address:

FPEIS Project Officer
U.S. Environmental Protection Agency
Special Studies Staff (MD-63)
Industrial Environmental Research Laboratory
Research Triangle Park, North Carolina 27711

Users should send separate requests for different runs even if the same command is being used repeatedly. For example, if a user wishes to interrogate the data base according to a specific access criteria, any change to that criteria must be shown in a separate request. Receipt of the request will be acknowledged to the requester in writing. If there are any

errors in the request or some information is missing, the requester will be contacted to clarify the problem. When the request has been processed, the output will be sent to the requester for verification.

3.3 Special Data Retrieval Requests

It is recognized at the outset that the System Request Commands are not likely to be diverse enough to satisfy all user needs for data. For this reason, a special data retrieval request category was established. There is no specific form to be used for special requests; there is merely a set of general guidelines to follow in preparing the request. These guidelines are as follows:

1. Be explicit: Be thoroughly familiar with the FPEIS data base structure. Identify each data base element to be sorted and/or retrieved by name. Should additional work on the request be required, consultation with the requester will be initiated, and, upon completion, the printout will be returned to the requester for verification.

2. Plan the request: Be sure that the access criteria applies to the proper type of data element. Remember that only key values may be retrieved directly and that nonkey values must be qualified for data access (see Section 6.4). Specify all needed qualifications and identify all input data for comparative evaluation.

3. Define the output: Determine how you wish the data to be displayed on output. Identify how data elements are to be ordered. Specify column headings. Define any calculations to be performed on the accessed data.

The completed definition of the request should be sent to the FPEIS project officer at IERL-RTP. The user should be sure to include his telephone number with the request. If there are any problems encountered with the request, the user will be contacted by telephone to resolve the problem.

When the request has been received, a letter of acknowledgment will be sent to the requester. The letter will include a preliminary estimate of the length of time required to process the request. As emphasized previously, the length of time needed to process a special request will depend upon the complexity of the request. The simpler the request, the faster it can be processed.

If no problems are encountered that require consultation with the requester, the results will be sent to the requester when the processing is completed. The requester should review the output to verify that it satisfies the request. If it does not, the printout should be returned with corrections to IERL for reworking. If the printout is satisfactory, the requester should notify the FPEIS project officer of his acceptance.

3.4 FPEIS User Support

IERL/RTP is committed to the on-going support of the FPEIS data base and its associated software. The administrative functions relative to the FPEIS are provided by the Special Studies Staff in IERL. Technical development and maintenance is provided by the FPEIS Support Staff, which is composed of Government contractors under the direction of the FPEIS Project Officer. The FPEIS Support Staff has the responsibility for conducting the data QA program, updating documentation, developing analytical software specifications, conducting information transfer activities, etc. This function is being provided by Midwest Research Institute in Kansas City, Missouri. Data processing activities are performed by MRI Systems Corporation of Austin, Texas, from offices at Research Triangle Park, North Carolina.

Any questions regarding the FPEIS should be directed in writing to the following address:

FPEIS Project Officer
U.S. Environmental Protection Agency
Special Studies Staff (MD-63)
Industrial Environmental Research Laboratory
Research Triangle Park, North Carolina 27711

or by telephone to:

FTS: 629-2745
Commercial: 919/541-2745

SECTION 4

ON-LINE REQUEST PROCEDURES

CONTENTS

Number	Item	Page
List of Figures		UG-4.0-2
List of Tables		UG-4.0-2
4.0	Introduction	UG-4.0-3
4.1	NCC User Qualifications and Services Registration	UG-4.1-1
4.1.1	Registration Procedures	UG-4.1-2
4.1.2	User ID and Password	UG-4.1-6
4.2	Interactive Terminal Operation	UG-4.2-1
4.2.1	Initiating a Demand Processing Session	UG-4.2-7
4.2.2	Terminating a Demand Processing Session	UG-4.2-10
4.2.3	Accessing the FPEIS Data Base	UG-4.2-11
4.3	Remote Batch Terminal Operation	UG-4.3-1
4.3.1	Initiating a Remote Batch Processing Session	UG-4.3-4
4.3.2	Terminating a Remote Batch Processing Session	UG-4.3-6
4.4	FPEIS User Support	UG-4.4-1

SECTION 4

LIST OF FIGURES

Number	Title	Page
4.1-1	Application Form for NCC Services.	UG-4.1.1-3
4.3-1	Request for Batch Terminal Support Form. . . .	UG-4.3-3

SECTION 4

LIST OF TABLES

Number	Title	Page
4.2-1	Remote Interface Control Statements.	UG-4.2-5
4.2-2	NCC Demand Access Telephone Numbers.	UG-4.2.1-3
4.3-1	NCC Remote Batch Access Telephone Numbers. . .	UG-4.3.1-2

4.0 Introduction

The phrase "on-line request" in the title of this section implies that the user intends to establish direct communication with the FPEIS data base through some type of terminal-to-computer link. The procedure described in this section may be used by a qualified user of EPA's National Computer Center to access the FPEIS directly through an interactive data communications (demand) terminal or a remote job entry terminal. The specific qualifications for NCC user access is discussed in Section 4.1.

On-line users of the FPEIS are presumed to have a reasonably working knowledge of UNIVAC 1100 series computers and, in some cases, of SYSTEM 2000 natural language. Special data retrieval procedures, called System Request Commands, or SRC's, have been developed to minimize the data processing knowledge required to use the FPEIS. The SRC's are discussed in Sections 4.2, 4.3, and 5. Any user unsure of his familiarity with the UNIVAC or SYSTEM 2000 is urged to request information through the off-line procedures described previously in Section 3.

On-line users are granted READ-ONLY access to the FPEIS data base. No updating of data are permitted. New data must be submitted through the EPA project officer. In the READ-ONLY mode, the user may retrieve for sorting and evaluation any data stored in the system. The user may take advantage of the wide array of features offered by SYSTEM 2000 for data sorting and retrieval. For reference purposes, the FPEIS data base definition is given in Section 6.3, and lists of key and nonkey data elements are given in Section 6.4.

4.1 NCC User Qualifications and Services Registration

Qualified users are defined as those who have valid accounts with the National Computer Center at Research Triangle Park, North Carolina. In most cases, NCC users are either EPA personnel or contractors who are under EPA contract. The NCC is not available to public subscribers. Federal regulations prohibit the marketing of computer time by government data centers which may be in competition with commercial computer services vendors. Thus, it is not usually possible for FPEIS users who are not under EPA contract to obtain account numbers in order to access the NCC directly. Exceptions to this may be found with user access through interagency agreements or grants. The qualifications of a potential NCC user are determined by EPA's Management Information and Data Systems Division.

Any questions regarding the qualification of a user should be addressed to:

MIDSD TSSMS Office
U.S. Environmental Protection Agency
National Computer Center (MD-34B)
Research Triangle Park, North Carolina 27711

or by telephone to 919/541-3629 (FTS: 629-3629).

4.1.1 Registration Procedures

All users of the NCC UNIVAC 1100 must be registered for accounting and security purposes. Application for NCC services is made by submitting a completed EPA Form 2800-3 (Figure 4.1-1) to the appropriate ADP coordinator for approval and signature. Each EPA office or laboratory which uses the NCC or other computing facilities has a designated person (or persons) who serves as the ADP coordinator. All procedural matters pertaining to the use of the NCC should be directed to the ADP coordinator. Effective Thursday, June 1, 1978, the MIDSD Time Sharing Services Management System (TSSMS) Office was relocated to the National Computer Center. Requests for EPA user account modifications processed through the ADP coordinators to authorize new accounts or add new users to existing accounts, normally submitted using the EPA Form 2800-3, should then be forwarded to the following address:

MIDSD TSSMS OFFICE
Environmental Protection Agency
National Computer Center (MD-34B)
Research Triangle Park, North Carolina 27711

In instances where a user organization requires immediate access to computer facilities, temporary authorization can be achieved by telephone contact with the TSSMS Office. Effective June 1, 1978, requests for temporary authorization should be directed to 919/541-3629 (FTS: 629-3629). Upon receiving temporary authorization, a completed Form 2800-3 must be forwarded to the TSSMS Office. The temporary authorization obtained by telephone is valid for a 2-week period pending receipt of the Form 2800-3

for processing permanent authorization. Requests for cancellation of specific users authorized under a given account or changes in user address/telephone numbers will be processed by telephone using the TSSMS telephone number listed above.

Non-EPA users (e.g., contractors, grantees, etc.) should submit all required forms to their EPA project officer, who in turn will forward the information to the ADP coordinator. Account authorizations/modifications for Interagency Agreement User Accounts (non-EPA users) should be forwarded for approval to:

W. G. Allen, Computer Specialist
Environmental Protection Agency
National Computer Center (MD-34)
Research Triangle Park, North Carolina 27711

Upon approval of Interagency requests, the TSSMS Office will complete implementation of the authorization and notify the respective project manager. Any questions concerning the above should be directed to the TSSMS Office at 919/541-3641 (FTS: 629-3641). Please note that, in regard to EPA Form 2800-3, the organization titles and codes and the EPA DIPS organization titles and codes, and the program element titles and codes are assigned by the Office of Planning and Programming. The account number will be assigned to the user by MIDSD and must appear on all transactions attempted with the NCC UNIVAC 1100.

EDP SERVICES REGISTRATION

(Please Print or Type)

MIDSD USE ONLY

DATE RECEIVED

SERVICE (Check one)
- ☐ TIME SHARING
  - ☐ TECHNICAL ASSISTANCE
- ☐ OTHER

SUPPLIER (Specify)

SOURCE OF FUNDS
- ☐ U.S. EPA
  - ☐ REIMBURSIBLE
- ☐ SPONSORED

PROJECT CODE

ENVIRONMENTAL SYSTEM IDENTIFICATION NUMBER

PROJECT TITLE (Limit: 60 characters, including spaces)

PROJECT DESCRIPTION

ORGANIZATION

ORGANIZATION CODE

PROGRAM ELEMENT TITLE

PROGRAM ELEMENT CODE

DOLLAR AMOUNT | DATE TO BEGIN | DURATION | SYSTEM | ☐ RETRIEVAL ONLY ☐ FULL ACCESS | DAILY STORAGE

PROJECT MANAGER | NAME (Last, First, M.I.) | PHONE (Include area code) | DISTANCE CODE | REFERENCE INITIALS | LOGON

MAIL CODE (or room) | OFFICE OR LOCATION

ADDRESS (Street or P.O. Box) | CITY | STATE | ZIP CODE

MAILING LIST CODE
M ☐ S ☐
P ☐ T ☐
C ☐ U ☐
F ☐ N ☐

USER | NAME (Last, First, M.I.) | PHONE (Include area code) | DISTANCE CODE | REFERENCE INITIALS | LOGON

MAIL CODE (or room) | OFFICE OR LOCATION

ADDRESS (Street or P.O. Box) | CITY | STATE | ZIP CODE

MAILING LIST CODE
M ☐ S ☐
P ☐ T ☐
C ☐ U ☐
F ☐ N ☐

USER | NAME (Last, First, M.I.) | PHONE (Include area Code) | DISTANCE CODE | REFERENCE INITIALS | LOGON

MAIL CODE (or room) | OFFICE OR LOCATION

ADDRESS (Street or P.O. Box) | CITY | STATE | ZIP CODE

MAILING LIST CODE
M ☐ S ☐
P ☐ T ☐
C ☐ U ☐
F ☐ N ☐

TO:

U.S. Environmental Protection Agency
Director, Management Information and
Data Systems Division (PM 218)
Washington, D.C. 20460

ORIGINATED BY | DATE

CONCURRENCE (Funding) | DATE

CONCURRENCE (Other) | DATE

MAILING LIST KEY

M — MANAGEMENT PANEL
P — PROPERTY
C — CONTRACTOR
F — FEDERAL NON-EPA
S — STATE OR LOCAL GOVT
T — TERMINAL CONTACT
U — UNIVERSITY
N — SYSTEM NEWS

MIDSD USE ONLY

POSTED | UPDATED | PROOFED

EPA Form 2800-3 (Rev. 2-77) PREVIOUS EDITION IS OBSOLETE

(continued on back)

Figure 4.1-1. Application Form for NCC Services.

PLEASE PRINT OR TYPE
(Additional users)

USER NAME (Last, First, M.I.)	PHONE (Include area code)	DISTANCE CODE	REFERENCE INITIALS	LOGON
MAIL CODE (or room) / OFFICE OR LOCATION		MAILING LIST CODE		
ADDRESS (Street or P.O. Box) / CITY	STATE / ZIP CODE	M ☐ S ☐ P ☐ T ☐ C ☐ U ☐ F ☐ N ☐		
USER NAME (Last, First, M.I.)	PHONE (Include area code)	DISTANCE CODE	REFERENCE INITIALS	LOGON
MAIL CODE (or room) / OFFICE OR LOCATION		MAILING LIST CODE		
ADDRESS (Street or P.O. Box) / CITY	STATE / ZIP CODE	M ☐ S ☐ P ☐ T ☐ C ☐ U ☐ F ☐ N ☐		
USER NAME (Last, First, M.I.)	PHONE (Include area code)	DISTANCE CODE	REFERENCE INITIALS	LOGON
MAIL CODE (or room) / OFFICE OR LOCATION		MAILING LIST CODE		
ADDRESS (Street or P.O. Box) / CITY	STATE / ZIP CODE	M ☐ S ☐ P ☐ T ☐ C ☐ U ☐ F ☐ N ☐		
USER NAME (Last, First, M.I.)	PHONE (Include area code)	DISTANCE CODE	REFERENCE INITIALS	LOGON
MAIL CODE (or room) / OFFICE OR LOCATION		MAILING LIST CODE		
ADDRESS (Street or P.O. Box) / CITY	STATE / ZIP CODE	M ☐ S ☐ P ☐ T ☐ C ☐ U ☐ F ☐ N ☐		
USER NAME (Last, First, M.I.)	PHONE (Include area code)	DISTANCE CODE	REFERENCE INITIALS	LOGON
MAIL CODE (or room) / OFFICE OR LOCATION		MAILING LIST CODE		
ADDRESS (Street or P.O. Box) / CITY	STATE / ZIP CODE	M ☐ S ☐ P ☐ T ☐ C ☐ U ☐ F ☐ N ☐		
USER NAME (Last, First, M.I.)	PHONE (Include area code)	DISTANCE CODE	REFERENCE INITIALS	LOGON
MAIL CODE (or room) / OFFICE OR LOCATION		MAILING LIST CODE		
ADDRESS (Street or P.O. Box) / CITY	STATE / ZIP CODE	M ☐ S ☐ P ☐ T ☐ C ☐ U ☐ F ☐ N ☐		
USER NAME (Last, First, M.I.)	PHONE (Include area code)	DISTANCE CODE	REFERENCE INITIALS	LOGON
MAIL CODE (or room) / OFFICE OR LOCATION		MAILING LIST CODE		
ADDRESS (Street or P.O. Box) / CITY	STATE / ZIP CODE	M ☐ S ☐ P ☐ T ☐ C ☐ U ☐ F ☐ N ☐		
USER NAME (Last, First, M.I.)	PHONE (Include area code)	DISTANCE CODE	REFERENCE INITIALS	LOGON
MAIL CODE (or room) / OFFICE OR LOCATION		MAILING LIST CODE		
ADDRESS (Street or P.O. Box) / CITY	STATE / ZIP CODE	M ☐ S ☐ P ☐ T ☐ C ☐ U ☐ F ☐ N ☐		
USER NAME (Last, First, M.I.)	PHONE (Include area code)	DISTANCE CODE	REFERENCE INITIALS	LOGON
MAIL CODE (or room) / OFFICE OR LOCATION		MAILING LIST CODE		
ADDRESS (Street or P.O. Box) / CITY	STATE / ZIP CODE	M ☐ S ☐ P ☐ T ☐ C ☐ U ☐ F ☐ N ☐		

EPA Form 2800-3 (Rev. 2-77) (Reverse)

Figure 4.1-1. (Concluded)

4.1.2 User ID and Password

The NCC UNIVAC 1100 has a comprehensive, multi-level security system which is designed to prohibit unauthorized use of the computer. A feature of this security system is the Time Sharing Services Management System (TSSMS) which requires that all users be identified by a unique USERID and PASSWORD before access to the computer is granted. The USERID/PASSWORD must appear on all demand and batch job requests. This will be discussed in detail later in Sections 4.2 and 4.3, respectively.

The USERID/PASSWORD is assigned to each individual user of the NCC by MIDSD. Requests for a USERID/PASSWORD should be submitted to the appropriate ADP coordinator (through the EPA project officer, if necessary) for approval and signature.

4.2 Interactive Terminal Operation

Demand processing, or interactive terminal operation, is defined as a mode of operation in which processing is dependent on manual interface with the central processor during processing. Basically, it is a conversational mode of operation requiring a demand and response type of activity. Conversational operation via a remote terminal causes the Executive System, a demand processor, or an active program to immediately react and respond. Demand processing terminals are generally thought of as being remote from the computer site and as having a printer or a cathode-ray tube and keyboard. An example of a demand terminal is the teletype-writer keyboard and printer.

The distinction between batch-mode processing and demand processing lies in the frequent interaction with the user that occurs during demand processing. The terminal user is considered to be in conversation with the Executive System, special demand function, user programs, or the batch functions of the Executive System on a unit basis.

Tasks executed by the demand terminal user normally have frequent but short bursts of computation. To process a substantial amount of computation may require a long period of time. Access to computation is a percentage of the total computing facility and is scheduled in small increments of time at frequent intervals to provide immediate responses. This action gives the appearance of total system control to the user and the impression of being the only user currently running. The more a user is required to interact with a demand program the shorter the bursts of computation required to

service a given request. The bursts of computation are time-shared within the Executive System to provide an apparent immediate response, with the program placed in a dormant mode during idle periods awaiting response from the user.

While a demand program is in a dormant mode, it may be necessary to swap the program from main storage. Normally, this transfer happens only when main storage is full and another program currently on mass storage has work to do.

The demand terminal has three distinct modes of operation. They are described below:

- Terminal Inactive Mode

  The initial mode of the terminal following the sign-on procedure. The terminal will return to this mode at the completion of the other two modes.

- Demand Run Mode

  This mode is achieved by submitting a @RUN control statement (see Section 4.2.1) from the primary input device; that is, the keyboard. The terminal operator must wait until the date and time message is displayed at the terminal before submitting the run stream data. In demand mode, the input will be solicited when input is desired by the Executive System. The terminal is returned to the inactive mode by submitting a @FIN control statement (see Section 4.2.2).

- Batch Mode

  The demand terminal may be switched from demand mode to batch mode for input or output.

  The "B" sub-option on the @RUN control statement (@RUN,/B) will place the terminal in batch input mode. Input will not be solicited as in demand run mode. The terminal will be returned to the terminal inactive mode following a @FIN control statement. Another @RUN control statement will be accepted while in the remote batch run whether it contains a 'B' option or not. Output files generated by the batch run, as well as those SYM'd (via @SYM) to the terminal can be displayed at the terminal by entering the statement, @@SEND. The terminal is returned to the inactive mode when the output process of the file is complete.

Interactive (or demand) processing with the NCC UNIVAC 1100 is supported for a variety of low-speed data communications terminals. Generally speaking, most 30 character/second (CPS) terminals which have ASCII character sets will be able to access the NCC. The NCC does not support any terminals which operate at 10 CPS or 15.5 CPS. Also, the NCC does not support IBM 2741 or similar EBCDIC code set terminals.

A partial list of terminals supported by the NCC for demand processing include the following:

Anderson-Jacobson Models 630 and 840
General Electric TermiNet 300 or equivalent
UNIVAC UNISCOPE 100
UNIVAC DCT 500 or equivalent
Texas Instruments Silent 700 series
Hazeltine (most models)
LA36 DECwriter II

If you are uncertain about the compatability of a particular terminal with the NCC UNIVAC 1100, you should contact the following:

NCC User Services
919/541-3649
FTS: 629-3649

All UNIVAC supported demand terminals use a common interface (device routines providing the user interface with unit record peripherals) for input and output processing. This provides several controls and features to all demand terminals in a uniform manner. Control of remote symbionts is regulated by control statements prefixed with a double master space (@@). These control statements do not require the input solicitation. They may be entered after an output interrupt (break-key) or any other time the terminal operator finds the need. The control statements are given in Table 4.2-1.

For more details on demand processing, the user should refer to the National Computer Center User Reference Manual, Vol. V, Section 2. This manual may be obtained from NCC User Services at the telephone numbers listed above.

The remainder of this section will address demand processing as it applies to the FPEIS.

TABLE 4.2-1. REMOTE INTERFACE CONTROL STATEMENTS

Statement	Mode	Description
@@X TIOC		The @@X statement directs the Executive System to take action on any or all of the four possible action parameters. The @@X defaults to @@X 0.
	Demand Run	T - terminate the demand run's present execution.
	Demand Run	I - discard all backed-up input.
	Demand Run Remote Batch	O - discard all backed-up output.
	Demand Run	C - generate a 'BRK' contingency.
@@SKIP n	Demand Run	Skip n lines of output where n is a value of 0 to 63. The SKIP may be reset by a @@SKIP 0. The @@SKIP n defaults to @@SKIP 0.
@@SEND	Terminal Inactive	Send an queued batch output file to the terminal.
@@RQUE	Remote Batch	Stop the present batch output file and requeue it for a later @@SEND request. Return to terminal inactive mode.
@@CONT	All	Directs the symbiont to continue. Useful after a BRK-KEY when no action is desired.
@@CQUE	Demand Run	Circumvent input solicitation requirement. Allow several input images to be buffered in memory before the terminal is placed in the wait condition.
@@INQ	All	Directs the Executive System to buffer all input to mass storage until the @@END control statement is received. If the @@INQ statement is entered in terminal inactive mode, the next input should be a @RUN statement. All @RUN statements entered while in @@INQ mode will be considered remote batch and not demand.

TABLE 4.2-1. (Concluded)

Statement	Mode	Description
@@END	All	Terminates special input mode, i.e., @@CQUE or @@INQ. The @@END returns the terminal to demand run from @@CQUE and will process the mass storage buffered input of @@INQ.
@@ESCA	Demand Run	Allows the input to be passed to the requester unaltered from the format of which it was entered; that is, all communication envelope characters are not removed nor is the image translated.
@@TERM	All	Directs the Executive System to terminate the terminal. It is recommended that the remote operator enter @@TERM only while in the terminal inactive mode. However, if entered while a run is active, the run and terminal will be terminated. @@TERM is equivalent to sign off.
@@TTY W,n	All	Changes the maximum character width of the page from the default 80 characters to n characters wide. In most cases, the maximum page width should be set to 132.

4.2.1 Initiating a Demand Processing Section

Communications are established with the NCC UNIVAC 1100 through data communication modems or couplers over voice-grade telephone lines. Users should follow the steps given in the equipment user manual for their terminal in order to establish the data link to the computer. A list of nationwide telephone access numbers for the NCC is given in Table 4.2-2. Once the data link is established, the following sequence of commands should be entered (for clarity, the information printed by the computer is shown in capital letters; the input required from the user in small letters). Note that the pound sign (#) denotes a carriage return:

Command	Description
#nccdemd#	This identifies the NCC to the communications network.
READY TO NCC ON 9E	Response indicates that communication is established on Port 9E.
ENTER USERID/PASSWORD: > xxx/xxxxxx#	Enter the approved USERID and PASSWORD following the input solicitation symbol (>).
*DESTROY USERID/PASSWORD ENTRY	
UNIVAC 1100 OPERATING SYSTEM VER. 33R0030-315A(RSI)	This header message is usually followed by several lines of text indicating special news which can be obtained. When the solicitation symbol (>) is received you are ready to enter a valid @RUN card.

```
> @run nnxxx,account
number,fpeis,15#
```

where nnxxx = the RUNID. Usually this begins with a number that designates an output receiving bin at the NCC followed by the user's initials. Please consult the NCC User Reference Manual or call User Services for more information.

account no. = the NCC account number as given.

fpeis = the project code which enables access to the FPEIS data base and software. <u>No other project code may be</u> used.

```
DATE:    060179    TIME:  135248
>
```

This is the system response if a valid @RUN card has been entered, followed by the >. NOTE: if your terminal can print more than 80 characters across the page, you may wish to expand the page width as shown below.

```
@@tty w,nnn#
```

where nnn = the maximum width of the page in characters (usually 132.

```
-@@COMPLETE
>
```

Indicates that the @@TTY command has been executed.

At this point, the computer is ready to receive instructions for accessing the data base or for executing FPEIS retrieval or analytical software (e.g., System Request Commands). For users who are knowledgeable in SYSTEM 2000 natural language, Section 4.2.3 describes the accessing procedure. Use of the System Request Commands is described in Section 5.

TABLE 4.2-2. NCC DEMAND ACCESS TELEPHONE NUMBERS

State	City	Telephone
Alabama	Montgomery	205/277-9390
California	San Francisco	415/391-0970
Colorado	Denver	303/837-0843
Connecticut	Wethersfield	203/529-3378
District of Columbia	Washington	202/966-9510
Georgia	Athens	404/549-3882
	Atlanta	404/873-6431
Illinois	Chicago	312/663-1640
Louisiana	New Orleans	504/566-0041
Massachusetts	Boston	617/742-0420
Michigan	Grosse Ile	313/675-8936
	Lansing	517/485-3220
Minnesota	Minneapolis	612/861-7451
Missouri	Kansas City	816/474-3540
	St. Louis	314/569-3150
Nevada	Las Vegas	702/736-1988
New York	New York	212/233-1604
North Carolina	Raleigh/Durham	919/541-2000
Ohio	Cincinnati	513/751-5800
Pennsylvania	Philadelphia	215/925-4407
South Carolina	Columbia	803/256-1018
Tennessee	Nashville	615/244-8020
Texas	Dallas	214/651-1723
Washington	Seattle	206/682-6456
All other locations (toll free)		800/424-3690

4.2.2 Terminating a Demand Processing Session

Two commands are required to end a demand processing session--the @FIN and the @@TERM. The @FIN command ends the run and results in the printing of summary usage and accounting data, and places the terminal in the inactive mode. The @@TERM command ends the session by disconnecting the terminal from the computer.

A typical sequence is as follows (# denotes carriage return):

```
>@fin#                                          Enter the @FIN command

RUNID:   XXXXX   ACCT:   XXXXXXXXXX        PROJECT:  FPEIS
TIME:            TOTAL:  00:00:35.510      CBSUPS:   001854139
                 CAU:    00:00:00.177      I/O:      00:00:08.822
                 CC/ER:  00:00:26.509      WAIT:     00:02:36.079
SRC:             PS =      000130352       ES =       000276035

SRUS:  00:01:41.027     COST:   $005.05
IMAGES READ:  78        PAGES:  3
START:  13:52:47   MAY 17, 1978   FIN:  13:57:50   MAY 17, 1978
*TERMINAL INACTIVE*
>@@term#                                     Enter the @@ TERM command
```

4.2.3 Accessing the FPEIS Data Base

Read-only access to the data base is granted to users of the FPEIS who use this procedure. Users are cautioned not to attempt to use this procedure unless they are familiar with SYSTEM 2000 natural language.

The sequence is as follows (# denotes carriage return):

```
>@add fpeis.start#                    Enter the @ADD command.

     05/17/78     17:09:07     BEGIN SYSTEM 2000     VERSION 2.80D
---
     -556- ASSIGNED...TFPEISC      12      28443     05/09/78     11:44:14
---
---
ENTER *C4010* AND WHERE CLAUSE ON NEXT LINE FOR DIAMETER REPORT
                                 05/17/1978
---
>
```

At this point, the system is ready to accept valid SYSTEM 2000 commands. The session may be ended by using the EXIT: command, which produces the trailer banner and returns to control mode with the input solicitation character (>) given.

```
>exit:#
 05/17/78   17:14:52   END   SYSTEM 2000   VERSION 2.80D
>
```

The demand processing session may be terminated by using the procedure given in Section 4.2.2.

Any attempts to change or modify the data base in any way will result in the following diagnostic message:

```
-864- COMMAND NOT AVAILABLE IN SHARED MODE -
---
>
```

4.3 Remote Batch Terminal Operation

Batch processing, whether remote or local submittal, implies that discrete jobs are submitted to the NCC UNIVAC 1100 from cards or some similar form. If local, card decks are submitted to the I/O Control Clerk and then loaded into the computer; if remote, cards are read into the computer through a high-speed remote job entry (RJE) terminal which has been connected to the computer via telephone data link.

Remote batch terminal operation with the NCC UNIVAC 1100 is currently supported under the UNIVAC 1004 and NTR (9000 Remote) terminal protocols. This means that a variety of commercial RJE terminals which are capable of emulating (or looking like) a U-1004 or NTR terminal may be used to access the NCC UNIVAC 1100. A partial list of RJE terminals which satisfy one or more of these conditions includes the following:

DATA 100 Models 74, 76, and 78
COPE RJE Terminals
Harris RJE Terminals
UNIVAC 1004
UNIVAC 9200 NTR

If you are uncertain regarding the compatibility of a particular terminal with the NCC UNIVAC 1100, you should contact the following:

NCC User Services
919/541-3649
FTS: 629-3649

All RJE terminals are identified to the NCC UNIVAC 1100 by a unique SITE ID which is assigned by the MIDSD TSSMS Office at Research Triangle Park, North Carolina. Figure 4.3-1 gives an example of the form required for batch terminal support. The completed form is submitted to the appropriate ADP coordinator (through the EPA project officer if required) for approval and signature.

The batch SITE ID is of the form DATAXX and must be transmitted to the NCC UNIVAC 1100 at sign-on before any processing can be initiated.

Organization: _____

Terminal manufacturer & model number: _____

If programmable, what UNIVAC terminal does the terminal emulate?

_____

Hours of Operation: From _____ To _____ EDT

Person responsible:

Name _____

Title _____

Mailing Address _____

_____

_____

Telephone -- FTS _____ Ext. _____

-- Commercial _____ Ext. _____

Comments: _____

_____

_____

ADP Coordinator _____ Date _____

THE FOLLOWING TO BE COMPLETED BY NCC

SITE-ID _____

_____

Telephone numbers to use:

FTS _____

_____

_____

Commercial _____

_____

Contacts: User Services
FTS 629-3649
919/541-3649

Central Computer Operations:

Day: _____

_____

Night: _____

Mailing Address:

National Computer Center
U.S. EPA
Research Triangle Park
North Carolina 27711

Hours available for operation:

Weekdays: ____ to ____ EDT
Saturday: ____ to ____ EDT
Sunday: ____ to ____ EDT
Holidays: ____ to ____ EDT

Comments: _____

_____

_____

Figure 4.3-1. Request for Batch Terminal Support Form.

4.3.1 Initiating a Remote Batch Processing Session

Communications are established with the NCC UNIVAC 1100 through data communication modems over voice-grade telephone lines. The NCC UNIVAC 1100 will support RJE processing at either 2000 bits/second (BPS) transmission rate or at 4800 BPS transmission rate. A list of nationwide RJE telephone access numbers for the NCC is given in Table 4.3-1.

Batch processing through a RJE terminal essentially means that the terminal-to-computer data link must be established and the computer card deck must be read into the computer in a prescribed manner. Since this procedure varies dramatically among terminal vendors, the user should refer to his terminal hardware operating manual for the appropriate procedure. If any problems or questions arise, the user should contact NCC User Services.

TABLE 4.3-1. NCC REMOTE BATCH ACCESS TELEPHONE NUMBERS

Location	Transmission Rate (BPS)	Telephone
North Carolina only	2000	919/549-8970
Continental U.S. (except NC) (toll free)	2000	800/334-8581
		800/334-8582
	4800	800/334-8585
		800/334-8586
FTS (all locations)	2000	629-2363
		629-2364
		629-2471
		629-2472

Note: 2000 BPS transmission requires Bell 201A dataset or equivalent.
4800 BPS transmission requires Bell 208B dataset or equivalent.

4.3.2 Terminating a Remote Batch Processing Session

The termination of a remote batch processing session depends upon which UNIVAC RJE terminal is being used (or emulated). The user should consult his terminal hardware operations manual for the correct procedure.

4.4 FPEIS User Support

IERL/RTP is committed to the on-going support of the FPEIS data base and its associated software. The administrative functions relative to the FPEIS are provided by the Special Studies Staff in IERL. Technical development and maintenance is provided by the FPEIS Support Staff, which is composed of government contractors under the direction of the FPEIS project officer. The FPEIS Support Staff has the responsibility for conducting the data QA program, updating documentation, developing analytical software specifications, conducting information transfer activities, etc. This function is being provided by Midwest Research Institute in Kansas City, Missouri. Data processing activities are performed by MRI Systems Corporation of Austin, Texas, from offices at Research Triangle Park, North Carolina.

Any questions regarding the FPEIS should be directed in writing to the following address:

FPEIS Project Officer
U.S. Environmental Protection Agency
Special Studies Staff (MD-63)
Industrial Environmental Research Laboratory
Research Triangle Park, North Carolina 27711

or by telephone to:

FTS: 629-2745
Commercial: 919/541-2745

Problems relating to the operation of the NCC UNIVAC 1100, to data communications, etc., are beyond the scope of the FPEIS Support Staff. These questions should be addressed to:

User Services
National Computer Center (MD-34B)
U.S. Environmental Protection Agency
Research Triangle Park, North Carolina 27711

FTS: 629-3649
Commercial: 919/541-3649

SECTION 5

CATALOG OF SYSTEM REQUEST COMMANDS

CONTENTS

Number	Item	Page
5.0	Introduction	UG-5.0-1
5.1	FPEIS SERIES Report	UG-5.1-1
5.1.1	Demand Processing Procedure	UG-5.1-3
5.1.2	Batch Processing Procedure	UG-5.1-10
5.1.3	Example of FPEIS SERIES Report	UG-5.1-11
5.2	FPEIS SUMMARY Report	UG-5.2-1
5.2.1	Demand Processing Procedure	UG-5.2-2
5.2.2	Batch Processing Procedure	UG-5.2-3
5.3	Fractional Penetration Program (PENTRA)	UG-5.3-1
5.3.1	Demand Processing Procedure	UG-5.3-3
5.3.2	Batch Processing Procedure	UG-5.3-4
5.4	TALLY WHERE, TALLY ALL	UG-5.4-1
5.4.1	Demand Processing Procedure	UG-5.4-3
5.4.2	Batch Processing Procedure	UG-5.4-11
5.5	PRINT WHERE	UG-5.5-1
5.5.1	Demand Processing Procedure	UG-5.5-3
5.5.2	Batch Processing Procedure	UG-5.5-19
5.6	Chemical Data Search (CHEMSEARCH)	UG-5.6-1
5.6.1	Demand Processing Procedure	UG-5.6-2
5.6.2	Batch Processing Procedure	UG-5.6-26

5.0 Introduction

In order to simplify the retrieval of data from the FPEIS data base, a catalog of pre-defined (or "canned") programs has been developed as a user aid. Each program or procedure is identified by a unique number and is called a System Request Command, or SRC. The SRC's will allow users to obtain reports without having special expertise in either UNIVAC data processing or SYSTEM 2000 data base management system natural language. This feature will greatly enhance the usefulness and usability of the FPEIS to a wide audience of users.

Each entry in the SRC catalog is identified by the unique SRC number, as noted previously, and by the title of the activity to be performed. A brief abstract of the SRC is given which identifies in general terms the input required and the output to be expected. Since most SRC's will be applicable to both demand and batch processing, step-by-step procedures for executing the SRC in both modes are given. For demand processing, it is assumed that the user has successfully established communications with the UNIVAC 1100 computer as described in Section 4. It is assumed that batch users have established communications with the UNIVAC 1100 through a remote job entry terminal or have the capability of submitting jobs locally at the National Computer Center at Research Triangle Park, North Carolina. All input requirements are given and a sample (or typical) output produced by the SRC is included. Any comments pertaining to the use of the SRC which may be helpful to the user in executing the SRC are also given.

As new SRC's are developed and made available to users, this section will be updated.

5.1 SRC NUMBER: SRC-1

TITLE: FPEIS SERIES Report

ABSTRACT:

The FPEIS SERIES Report (SRC-1) is the basic report for the FPEIS. The only input parameter required by the SERIES Report is the unique Test Series Number which identifies the particular test series of interest. The SERIES Report lists all of the data contained in the test series in subseries and run number order. A typical SERIES Report is shown later in this section and is discussed below.

The first page of the SERIES Report lists the data pertaining to the source, the test series remarks, and the control device. Depending upon the number of control devices in series on the gas stream and the number of design specifications given, these data may carry over to page 2. The next page begins with data from the subseries level. The data contained here are, in order, test characteristics, control device operating parameters, particulate mass train results, particulate physical properties, bioassay results, and chemical composition data. Following these data, all data at the run level are given. The SERIES Report uses the particle concentrations and stage boundaries stored in the data base to calculate a particle size distribution as well as DM/DlogD, DN/DlogD, and CUMULATIVE MASS % LESS THAN SIZE. Usually, one run will be reported on a single page. The total SERIES Report, then, will be of varying length, depending upon the number of runs and subseries.

USER INPUT DATA REQUIRED:

Test Series Number (C310)

DATA QUALIFICATION REQUIRED:

None

5.1.1 Demand Processing Procedure

The user shall establish communications with the NCC UNIVAC 1100 computer according to the procedure given in Section 4.2.1 of this document. At the completion of that procedure, the computer is then ready to proceed with SRC-1. The command sequence follows:

NOTE: For clarity, all user-supplied data is shown in lower case letters; all computer-printed data are shown in capital letters. User-supplied carriage returns are indicated by the pound sign, #. All user-supplied data are entered following the input solicitation symbol, >.

>@add fpeis.series#	Enter the @ADD command for the SERIES report.
CTS 6R1 13:53:21 THE ASSUMED MODE IS FIELDATA FILENAME = 53	Computer prints header information similar to this.
ENTER YOUR ACCOUNT NUMBER > xxxxxxxxxx#	Enter your account number.
ENTER SERIES NUMBER > n#	Enter the Test Series Number n of the test series to be printed.
ENTER USER-ID FOR DEMAND TERMINAL PRINT, SITE-ID FOR REMOTE BATCH PRINT. IF NCC JUST PRESS RETURN > xxx#	This is self-explanatory.
ENTER NUMBER OF COPIES DESIRED. IF 1, JUST PRESS RETURN > n#	Self-explanatory.
IF NO MORE SERIES, ENTER LAST FOR SERIES NUMBER ENTER SERIES NUMBER > n# or last#	

If you enter another Test Series Number at this point, the computer will again ask for the print location and number of copies to be printed. This sequence will be repeated until the value "LAST" is entered for Test Series Number. The following trailer (or similar) will appear for each SERIES Report requested:

```
IN EXEC MODE
CASE UPPER ASSUMED
FILE IN FIELD 1 DISABLED -- ACCEPTED
ED 15R2-WED-05/17/78-13:55:42-(,0)
INPUT
EDIT
LINES:  7 FIELDATA
.
.
.
.
.
FURPUR 27R3 E33 SL73R1 05/17/78 13:56:08
>
```

At this point, user input for SRC-1 has been satisfied. The user may proceed to invoke another SRC or terminate the demand processing session as shown in Section 4.2.2.

SRC-1 creates a batch run for each SERIES report requested and submits them for processing by the Executive System. The output is not returned to the user's print site instantaneously but will be available after the batch job is finished.

Output Retrieval

USERID print site: SERIES reports queued for demand terminal output are retrieved by entering the USERID/PASSWORD at the start of a new session, followed by the command @@SEND,U. Remember: a page width of 132 characters is required.

Remote Batch print site: SERIES reports queued for remote batch terminal output will be transmitted to the receiving terminal immediately following the establishment of the data link and recognition of the SITEID by the NCC UNIVAC 1100.

NCC print site: SERIES reports printed at the NCC are delivered to Bin 30 for pick-up by IERL/RTP staff. Users may send output to the NCC and the output will be mailed to the user on the next work day. Users must notify the FPEIS Project Officer before doing this. Failure to do so will result in the printout being discarded.

Examples of demand processing use of SRC-1 follow. An example of a complete SERIES report may be found in Section 5.1.3.

Error Recovery

If an error occurs in responding to the computer query, the user may abort the SRC by typing "KILL" in response to the request for series number. The sequence of commands would appear as follows:

```
ENTER SERIES NUMBER > kill#
JOB KILLED
IN EXEC MODE
>
```

The user may now restart SRC-1 with the @ADD command or input another EXEC command.

EXAMPLE 5.1-1: SRC-1 Runstream (Output to Demand Terminal)

Execution of SRC-1

```
>@add fpeis.series#
CTS    6R1   10:27:19
<66>   30GLJ HAS BEEN ROLLED OUT
<65>   30GLJ IS TEMPORARILY UNAVAILABLE
THE ASSUMED MODE IS FIELDATA
FILE NAME = 27
ENTER YOUR ACCOUNT NUMBER >63022fpeis#
ENTER SERIES NUMBER >6#
ENTER USER-ID FOR DEMAND TERMINAL PRINT,
SITE-ID FOR REMOTE BATCH PRINT.
IF NCC JUST PRESS RETURN >glj#
ENTER NUMBER OF COPIES DESIRED.
IF 1, JUST PRESS RETURN >#
IF NO MORE SERIES, ENTER LAST
FOR SERIES NUMBER
ENTER SERIES NUMBER >last#
IN EXEC MODE
CASE UPPER ASSUMED
FILE IN FIELD 1 DISABLED--ACCEPTED
WARNING:  NEW ELEMENT WILL REPLACE EXISTING ELEMENT
ED 15R2-FRI-05/19/78-10:28:24-(,0)
INPUT
EDIT
LINES:6  FIELDATA
FURPUR 27R3 E33 SL73R1 05/19/78 10:28:32
>
```

Retrieval of output:

```
ENTER USERID/PASSWORD:
>xxx/xxxxx

*DESTROY USERID/PASSWORD ENTRY
*UNIVAC 1100 OPERATING SYSTEM  VER. 33R0030-315A(RSI)*
CURRENT NEWS IS AVAILABLE VIA @ED,R HOT*NEWS. COMNET NETWORK

INFORMATION IS AVAILABLE VIA @US*ER.NETWORK.

>@@send,u#
```

EXAMPLE 5.1-2: SRC-1 Runstream (Output to RJE Terminal)

Execution of SRC-1:

```
>@add fpeis.series#
CTS   6R1   13:53:21
THE ASSUMED MODE IS FIELDATA
FILE NAME = 53
ENTER YOUR ACCOUNT NUMBER >63022fpeis#
ENTER SERIES NUMBER >1#
ENTER USER-ID FOR DEMAND TERMINAL PRINT,
SITE-ID FOR REMOTE BATCH PRINT.
IF NOC JUST PRESS RETURN >data1ℓ#
ENTER NUMBER OF COPIES DESIRED.
IF 1, JUST PRESS RETURN >1#
IF NO MORE SERIES, ENTER LAST
FOR SERIES NUMBER
ENTER SERIES NUMBER >last#
IN EXEC MODE
CASE UPPER ASSUMED
FILE IN FIELD 1 DISABLED--ACCEPTED
ED 15R2-WED-05/17/78-13:55:58-(,0)
INPUT
EDIT
LINES:7; FIELDATA
FURPUR 27R3 E33 SL73R1 05/17/78 13:56:04
>
```

EXAMPLE 5.1-3: SRC-1 Runstream (Output to NCC)

Execution of SRC-1

```
>@add fpeis.series#
CTS   6R1    10:20:59
<66>  30GLJ HAS BEEN ROLLED OUT
<65>  30GLJ IS TEMPORARILY UNAVAILABLE
THE ASSUMED MODE IS FIELDATA
FILE NAME = 21
ENTER YOUR ACCOUNT NUMBER >63022fpeis#
ENTER SERIES NUMBER >6#
ENTER USER-ID FOR DEMAND TERMINAL PRINT,
SITE-ID FOR REMOTE BATCH PRINT.
IF NCC JUST PRESS RETURN >#
ENTER NUMBER OF COPIES DESIRED.
IF 1, JUST PRESS RETURN >1#
IF NO MORE SERIES, ENTER LAST
FOR SERIES NUMBER
ENTER SERIES NUMBER >last#
IN EXEC MODE
CASE UPPER ASSUMED
FILE IN FIELD 1 DISABLED--ACCEPTED
WARNING:  NEW ELEMENT WILL REPLACE EXISTING ELEMENT
ED 15R2-FRI-05/19/78-10:23:23-(,0)
INPUT
EDIT
LINES:6 FIELDATA
FURPUR 27R3 E33 SL73R1 05/19/78 10:23:32
>
```

EXAMPLE 5.1-4: SRC-1 Runstream (Error--Job Killed)

Execution of SRC-1:

```
>@add fpeis.series#
CTS   6R1   10:28:58
<66>  30GLJ HAS BEEN ROLLED OUT
<65>  30GLJ IS TEMPORARILY UNAVAILABLE
THE ASSUMED MODE IS FIELDATA
FILE NAME = 29
ENTER YOUR ACCOUNT NUMBER >63022fpeis#
ENTER SERIES NUMBER >1#
ENTER USER-ID FOR DEMAND TERMINAL PRINT,
SITE-ID FOR REMOTE BATCH PRINT.
IF NCC JUST PRESS RETURN >#
ENTER NUMBER OF COPIES DESIRED.
IF 1, JUST PRESS RETURN >24#                    *Error occurs here.
IF NO MORE SERIES, ENTER LAST
FOR SERIES NUMBER
ENTER SERIES NUMBER >kill#
JOB KILLED
IN EXEC MODE
>
```

5.1.2 Batch Processing Procedure

Remote or local batch processing of SRC-1 from card input is accomplished by entering an Executive System runstream in a given order. All cards must use 029 keypunch codes. Output may be printed at the remote batch site, a demand terminal, or at the NCC.

In order to execute SRC-1, the following card sequence is required:

```
@RUN,R/RS runid/65,accountnumber/userid, FPEIS,5,300/100
@PASSWD pw                          where pw = password
@ADD TFPEISC.RUN
REPORT FOR SERIES NO nn             where nn = Test Series Number
OUTPUT FILE IS OUTnn
PRINT k COPIES AT xxxxx             where k = number of copies to be
                                            printed
@EOF                                where xxxxx = userid for demand terminal
@FIN                                            = siteid for remote batch
                                                  terminal
                                                = PR for NCC
```

Output Retrieval

This is the same as that described in Section 5.1.1, Demand Processing Procedure.

5.1.3 Example of FPEIS SERIES Report

The following is an example of a FPEIS SERIES Report. Such a report would be the result of a user requesting a specific test series using SRC-1.

FINE PARTICLE EMISSIONS INFORMATION SYSTEM

FPEIS SERIES REPORT

TEST SERIES NO: 16 TEST SERIES AT SITE FROM TO BY STATNIC,R.M., AND D.C. DREHMEL, CSL/EPA,RTP,N.C.

REFERENCE: J.APCA, 25(6)>605, JUN 1975

SOURCE CHARACTERISTICS----------

NEDS SCC SOURCE CATEGORY: EXTCOMB BOILER
TYPE OF OPERATION: ELECTRIC GENERATN
FEED MATERIAL CLASS:
OPERATING MODE CLASS:

SITE NAME SHAWNEE STEAM PLANT
SOURCE NAME
ADDRESS

UTM ZONE UTM X-COORD . UTM Y-COORD .

TEST SERIES REMARKS----------

CONTROL DEVICE(S) CHARACTERISTICS----------

UNIT 1

DEVICE GENERIC TYPE: WET SCRUBBER
CATEGORY: GAS ATOMIZED SPRAY
CLASS: CONVENTIONAL
DESCRIPTION: ACTUAL SYSTEM INCLUDED A SPRAY TOWER (AFTER-SCRUBBER) WHICH WAS NOT USED DURING TEST

COMMERCIAL NAME: VENTURI SCRUBBER
MANUFACTURER: CHEMICO

CONTROL DEVICE DESIGN SPECIFICATIONS

01 VOLUMETRIC FLOW RATE 14.2 M3/SEC

TEST SERIES NO: 16 SUB-SERIES NO: 1 TEST LOCATION: 1 SUB-SERIES TEST DATE: FROM TO HOURS

TEST CHARACTERISTICS----------

SOURCE OPERATING MODE: COAL SOURCE OPERATING RATE: PCT DESIGN CAP:
FEED MATERIAL: FEED MATERIAL COMPOSITION:

SAMPLING LOCATION DESCRIPTION: PERCENT ISOKINETIC SAMPLING= 100

PROCESS CONDITIONS AT SAMPLING LOCATION

VOL. FLOW RATE= 9.4 DNM3/S VELOCITY= . M/S TEMPERATURE= 135 C PRESSURE= 756 MM HG

GAS COMPOSITION

WATER VAPOR (PERCENT BY VOLUME)= .

ORSAT ANALYSIS-- CO2 = .% CO = .% O2 = .% N2 = .%

TRACE GASES (PPM):

SUB-SERIES REMARKS----------

PARTICULATE MASS TRAIN RESULTS----------

FRONT HALF= .E+ TOTAL= .E+ MASS TRAIN REMARKS:

PARTICULATE PHYSICAL PROPERTIES----------

DENSITY= 1.000 G/CM3 (ASSUMED) RESISTIVITY= E+ OHM-CM ( )

OTHER PHYSICAL PROPERTIES:

TEST SERIES NO: 16 SUB-SERIES NO: 1 TEST LOCATION: I

CONTROL DEVICE OPERATING PARAMETERS----------

UNIT 1	01	LIQUID RATE	2274 LPM
	02	PRESSURE DROP	16.8 MMHG

TEST SERIES NO: 16 SUB-SERIES NO: 1 TEST LOCATION: I RUN NUMBER: 01

MEASUREMENT PARTICULARS----------

MEASUREMENT INSTRUMENT/METHOD NO: 1 NAME: BRINK IMPACTOR SIZE RANGE- .110 TO 5.000 MICROMETERS

COLLECTION SURFACE/SUBSTRATE:

MEASUREMENT START TIME: SAMPLING PERIOD: . MIN SAMPLING RATE: .L/MIN DILUTION FACTOR: 0001.0

GAS SAMPLING CONDITIONS- TEMPERATURE: 0177 C PRESSURE: 00756 MM HG PCT. WATER VAPOR: .

COMMENTS ON THE MEASUREMENT

CONCENTRATION BASIS = MASS

DIAMETER BASIS = CLASSIC AERODYNAMIC DEFINITION CALCULATED BOUNDARY DIAMETERS

PARTICLE SIZE DISTRIBUTION DATA----------

STOKES-DIA (UM)		CLASSIC AERODYNAMIC DIA (UM)		AERODYNAMIC IMPACTION DIA (UM)		DM (UG/DNM3)	DM/DLDAE (UG/DNM3)	DN (NO/CM3)	DN/DLDAE (NO./CM3)	CUM M % LESS SIZE
BNDRY	MID PT	BNDRY	MID PT	BNDRY	MID PT					
5.000		5.000		5.080						
1.700	2.915	1.700	2.915	1.779	3.006	5.100+05	1.089+06	3.930+04	8.389+04	36.290
.990	1.297	.990	1.297	1.068	1.378	1.418+05	6.039+05	1.240+05	5.282+05	18.577
.650	.802	.650	.802	.726	.881	1.144+05	6.261+05	4.233+05	2.316+06	4.286
.290	.434	.290	.434	.362	.513	2.516+04	7.178+04	5.871+05	1.675+06	1.143
.110	.179	.110	.179	.173	.250	9.148+03	2.173+04	3.066+06	7.284+06	.000

TOTAL MASS 8.005+05 TOTAL NUMBER 4.240+06

TEST SERIES NO: 16 SUB-SERIES NO: 1 TEST LOCATION: I RUN NUMBER: 02

MEASUREMENT PARTICULARS----------

MEASUREMENT INSTRUMENT/METHOD NO: 1 NAME: BRINK IMPACTOR SIZE RANGE- .110 TO 5.000 MICROMETERS

COLLECTION SURFACE/SUBSTRATE:

MEASUREMENT START TIME: SAMPLING PERIOD: . MIN SAMPLING RATE: .L/MIN DILUTION FACTOR: 0001.0

GAS SAMPLING CONDITIONS- TEMPERATURE: 0177 C PRESSURE: 00756 MM HG PCT. WATER VAPOR: .

COMMENTS ON THE MEASUREMENT

CONCENTRATION BASIS = MASS

DIAMETER BASIS = CLASSIC AERODYNAMIC DEFINITION CALCULATED BOUNDARY DIAMETERS

PARTICLE SIZE DISTRIBUTION DATA----------

STOKES-DIA (UM)		CLASSIC AERODYNAMIC DIA (UM)		AERODYNAMIC IMPACTION DIA (UM)		DM (UG/DNM3)	DM/DLDAE (UG/DNM3)	DN (NO/CM3)	DN/DLDAE (NO./CM3)	CUM M % LESS SIZE
BNDRY	MID PT	BNDRY	MID PT	BNDRY	MID PT					
5.000		5.000		5.080						
1.700	2.915	1.700	2.915	1.779	3.006	2.744+05	5.857+05	2.115+04	4.514+04	36.511
.990	1.297	.990	1.297	1.068	1.378	8.462+04	3.604+05	7.402+04	3.152+05	16.932
.650	.802	.650	.802	.726	.881	5.260+04	2.879+05	1.946+05	1.065+06	4.762
.290	.434	.290	.434	.362	.513	1.372+04	3.914+04	3.202+05	9.134+05	1.587
.110	.179	.110	.179	.173	.250	6.861+03	1.630+04	2.300+06	5.463+06	.000

TOTAL MASS 4.322+05 TOTAL NUMBER 2.910+06

TEST SERIES NO: 16 SUB-SERIES NO: 2 TEST LOCATION: 0 SUB-SERIES TEST DATE: FROM TO HOURS

TEST CHARACTERISTICS----------

SOURCE OPERATING MODE: COAL
FEED MATERIAL:

SOURCE OPERATING RATE:
FEED MATERIAL COMPOSITION:

PCT DESIGN CAP:

SAMPLING LOCATION DESCRIPTION:

PERCENT ISOKINETIC SAMPLING= 100

PROCESS CONDITIONS AT SAMPLING LOCATION

VOL. FLOW RATE= 9.4 DNM3/S VELOCITY= . M/S TEMPERATURE= 135 C PRESSURE= 756 MM HG

GAS COMPOSITION

WATER VAPOR (PERCENT BY VOLUME)= .

ORSAT ANALYSIS-- CO2 = .% CO = .% O2 = .% N2 = .%

TRACE GASES (PPM):

SUB-SERIES REMARKS----------

PARTICULATE MASS TRAIN RESULTS----------

FRONT HALF= .E+ TOTAL= .E+ MASS TRAIN REMARKS:

PARTICULATE PHYSICAL PROPERTIES----------

DENSITY= 1.000 G/CM3 (ASSUMED) RESISTIVITY= E+ OHM-CM ( )

OTHER PHYSICAL PROPERTIES:

TEST SERIES NO: 16 SUB-SERIES NO: 2 TEST LOCATION: 0 RUN NUMBER: 01

MEASUREMENT PARTICULARS----------

MEASUREMENT INSTRUMENT/METHOD NO: 1 NAME: BRINK IMPACTOR SIZE RANGE- .110 TO 5.000 MICROMETERS

COLLECTION SURFACE/SUBSTRATE:

MEASUREMENT START TIME: SAMPLING PERIOD: . MIN SAMPLING RATE: .L/MIN DILUTION FACTOR: 0001.0

GAS SAMPLING CONDITIONS- TEMPERATURE: 0177 C PRESSURE: 00756 MM HG PCT. WATER VAPOR: .

COMMENTS ON THE MEASUREMENT

CONCENTRATION BASIS = MASS

DIAMETER BASIS = CLASSIC AERODYNAMIC DEFINITION CALCULATED BOUNDARY DIAMETERS

PARTICLE SIZE DISTRIBUTION DATA----------

STOKES-DIA (UM)		CLASSIC AERODYNAMIC DIA (UM)		AERODYNAMIC IMPACTION DIA (UM)		DM (UG/DNM3)	DM/DLDAE (UG/DNM3)	DN (NO/CM3)	DN/DLDAE (NO./CM3)	CUM M % LESS SIZE
BNDRY	MID PT	BNDRY	MID PT	BNDRY	MID PT					
5.000		5.000		5.080						
1.700	2.915	1.700	2.915	1.779	3.006	4.574+03	9.763+03	3.525+02	7.524+02	95.556
.990	1.297	.990	1.297	1.068	1.378	1.830+04	7.793+04	1.601+04	6.817+04	77.775
.650	.802	.650	.802	.726	.881	4.574+04	2.503+05	1.692+05	9.262+05	33.334
.290	.434	.290	.434	.362	.513	2.516+04	7.178+04	5.871+05	1.675+06	8.888
.110	.179	.110	.179	.173	.250	9.148+03	2.173+04	3.066+06	7.284+06	.000

TOTAL MASS 1.029+05 TOTAL NUMBER 3.839+06

TEST SERIES NO: 16 SUB-SERIES NO: 2 TEST LOCATION: 0 RUN NUMBER: 02

MEASUREMENT PARTICULARS----------

MEASUREMENT INSTRUMENT/METHOD NO: 1 NAME: BRINK IMPACTOR SIZE RANGE- .110 TO 5.000 MICROMETERS

COLLECTION SURFACE/SUBSTRATE:

MEASUREMENT START TIME: SAMPLING PERIOD: . MIN SAMPLING RATE: .L/MIN DILUTION FACTOR: 0001.0

GAS SAMPLING CONDITIONS- TEMPERATURE: 0177 C PRESSURE: 00756 MM HG PCT. WATER VAPOR: .

COMMENTS ON THE MEASUREMENT

CONCENTRATION BASIS = MASS

DIAMETER BASIS = CLASSIC AERODYNAMIC DEFINITION CALCULATED BOUNDARY DIAMETERS

PARTICLE SIZE DISTRIBUTION DATA----------

STOKES-DIA (UM)		CLASSIC AERODYNAMIC DIA (UM)		AERODYNAMIC IMPACTION DIA (UM)		DM (UG/DNM3)	DM/DLDAE (UG/DNM3)	DN (NO/CM3)	DN/DLDAE (NO./CM3)	CUM M % LESS SIZE
BNDRY	MID PT	BNDRY	MID PT	BNDRY	MID PT					
5.000		5.000		5.080						
1.700	2.915	1.700	2.915	1.779	3.006	3.431+04	7.323+04	2.644+03	5.644+03	44.445
.990	1.297	.990	1.297	1.068	1.378	2.287+03	9.740+03	2.001+03	8.520+03	40.742
.650	.802	.650	.802	.726	.881	6.861+03	3.755+04	2.538+04	1.389+05	29.633
.290	.434	.290	.434	.362	.513	6.861+03	1.957+04	1.601+05	4.568+05	18.524
.110	.179	.110	.179	.173	.250	1.144+04	2.717+04	3.835+06	9.109+06	.000

TOTAL MASS 6.176+04 TOTAL NUMBER 4.025+06

04

5.2 SRC NUMBER: SRC-2

TITLE: FPEIS SUMMARY Report

ABSTRACT:

The FPEIS SUMMARY Report (SRC-2) provides a listing of all data in the data base for a specific Source Category in SERIES Report format. Allowable Source Category values are given below. The data are ordered by Test Series Number within the given Source Category; that is, the SUMMARY Report consists of several SERIES Reports for the same Source Category.

The SUMMARY Report produces a large volume of computer output, possibly several thousand pages. There are several restrictions on the use of this SRC which are discussed later.

USER INPUT DATA REQUIRED:

Source Category (C100)

Allowed values for Source Category are as follows:

EXTCOMB BOILER
INTERNLCOMBUSTION
INDUSTRIAL PROCES
POINT SC EVAP
SOLID WASTE
OTHER

DATA QUALIFICATION REQUIRED:

None

5.2.1 Demand Processing Procedure

SRC-2 is not available to demand users.

Due to the large volume of computer printout produced by this SRC, demand processing is prohibited. Users wishing to obtain a SUMMARY report should contact the FPEIS Project Officer (CML: 919/541-2745; FTS: 629-2745) for further information.

5.2.2 Batch Processing Procedure

SRC-2 may be processed only for printing at the NCC with limited exceptions.

Users who wish to obtain a SUMMARY report should contact the FPEIS Project Officer (CML: 919/541-2745; FTS: 629-2745) for runstream details. This is necessary because the SUMMARY report produces several thousand pages of output in some source categories. The FPEIS Project Officer will advise the user regarding the best means of acquiring the report. In most cases, the report will be run and printed at the NCC, then mailed to the user. For those source categories in which only a few test series exist, RJE access may be allowed.

(See SRC-1 for an example of one test series in SERIES report format.)

5.3 SRC NUMBER: SRC-3

TITLE: Fractional Penetration Program (PENTRA)

The Fractional Penetration Program PENTRA (SRC-3) enables users to calculate the efficiency of fine particle control devices (expressed as penetration) for specific test series, subseries, and runs. The FPEIS PENTRA has been adapted from a series of data reduction procedures developed for impactor measurements by Southern Research Institute. FPEIS PENTRA is, however, independent of measurement equipment since equipment-dependent parameters have already been accommodated when the data are loaded into the FPEIS data base originally.

The input requirements for FPEIS PENTRA are very simple. First, it is assumed that the user has access to and has studied the SERIES report (see SRC-1) prior to executing this program. The user will identify the inlet and outlet runs to be compared by specifying the inlet subseries and run, and the outlet subseries and run. The capability also exists to enable the user to average groups of inlet or outlet runs in order to obtain composite data.

The PENTRA program will retrieve the specified data from the data base. The mass (or number) concentrations and stage boundary diameters will be used to calculate cumulative mass loadings and differential size distributions. A curve is fitted to the inlet and the outlet values of the cumulative mass concentrations less than the stage diameter versus the diameter.

Next, the derivative of each of these curves is calculated at specified diameters and the average and standard deviation of the differential mass distributions are calculated. The control device efficiency (expressed as penetration) is determined by comparing the two curves at the same diameter.

The output from PENTRA will include basic process and control device data, and a tabulation of the inlet and outlet data. A computerized plot of control device efficiency as a function of particle size will be given for each of three types of boundary definitions used in the FPEIS; e.g., Stokes, classic aerodynamic, and aerodynamic impaction.

USER INPUT DATA REQUIRED:

Test Series Number (C310), Subseries Number (C610), Run Number (C1505).

DATA QUALIFICATION REQUIRED:

(To be added at a later date.)

5.3.1 Demand Processing Procedure

(To be added at a later date.)

5.3.2 Batch Processing Procedure

(To be added at a later date.)

5.4 SRC NUMBER: SRC-4

TITLE: TALLY WHERE, TALLY ALL

ABSTRACT:

One of the command features of SYSTEM 2000 natural language is the TALLY command. This command enables a user to determine the frequency of occurrence of a particular data element and how many unique values it assumes. The TALLY command actually has two options: the TALLY/EACH and the TALLY/ALL. The TALLY/EACH option produces a list of each unique value for the specified element along with the frequency of occurrence for that unique value. The TALLY/ALL option, on the other hand, lists only the minimum and maximum unique values, not each value.

The natural language TALLY command is limited to key data elements; that is, those which have been specifically identified for sorting keys. To broaden the applicability of the TALLY command for the FPEIS, SRC-4 has been developed to provide the TALLY WHERE and TALLY ALL commands. The output is the same as for the TALLY/EACH and TALLY/ALL commands, respectively. SRC-4 does, however, allow the user to qualify the data element to be tallied. Examples of the TALLY WHERE and TALLY ALL commands are given on the following pages.

USER INPUT DATA REQUIRED:

The user must supply the component number of the data element to be tallied. Both key and nonkey data elements may be selected. Data elements and component numbers for the FPEIS data base are listed in Section 6.3. The user must also identify whether he wants a TALLY WHERE or a TALLY ALL.

DATA QUALIFICATION REQUIRED:

Data elements to be tallied must be qualified by one or more key data elements in the qualification clause. Multiple data elements in the qualification clause may be separated by Boolean logic operators (AND, OR) and may use the logical operators: EQ, NE, GT, LT, GE, and LE. Data may also be qualified on the basis of the presence (EXISTS) of a data element or its absence (FAILS). A tabulation of key data elements is given in Section 6.4.

5.4.1 Demand Processing Procedure

SRC-4 should be executed using a demand (interactive) terminal. Since the possible combinations of data to be printed and qualified are almost infinite, the use of SRC-4 is best shown by example. In the following examples, it is assumed that the user has established communications with the computer in accordance with the procedure described in Section 4.2, and is ready to enter a command. For clarity, all user-supplied data are shown in lower case letters and all computer responses in capital letters. A user-supplied carriage return is shown by the # sign.

Example 1: TALLY with System-Initiated Abort

```
@add fpeis.tally#
CTS    6R1     10:33L04
THE ASSUMED MODE IS FIELDATA
FILE NAME = 53
ENTER 'W' IF TALLY-WHERE, 'A' IF TALLY-ALL >q#
INVALID TYPE A OR W
ENTER 'W' IF TALLY-WHERE, 'A' IF TALLY-ALL >w#
ENTER COMPONENT NUMBER OF DATA
ELEMENT TO BE TALLYED >300#                    *Error occurs here.*
ENTER QUALIFIER DATA AS COMPONENT NUMBER,VALUE
IF NO MORE, ENTER LAST >C310 spans 1*10#
ENTER QUALIFIER DATA AS COMPONENT NUMBER,VALUE
IF NO MORE, ENTER LAST >last#
IN EXEC MODE
CASE UPPER ASSUMED
FILE IN FIELD 1 DISABLED--ACCEPTED
WARNING:  NEW ELEMENT WILL REPLACE EXISTING ELEMENT
ED 15R2-WED-05/24/78-10:35:15-(,0)
INPUT
EDIT
LINES:6 FIELDATA
05/25/78  10:36:55  BEGIN SYSTEM 2000  VERSION 2.80D
---
-556- ASSIGNED...TFPEISC          12   28443 05/09/78  11:44:44
---
.............2
-454- ILLEGAL TERM IN IF-CONDITION -
    1 ERRORS HAVE OCCURRED
---
-397-   ALL REPORTS HAVE ERRORS -
---
---
C -801- MISSING STRING OR DATA TERMINATOR -
---
EXIT:
*WAIT-LAST INPUT IGNORED*
 05/25/78  10:42:31  END  SYSTEM 2000  VERSION 2.80D
FURPUR  27R3  E33  SL73R1  05/24/78  10:43:27
>
```

The error here is that the user has requested a TALLY for a repeating group data element, which is not allowed since these data elements never have values assigned to them. NO REPEATING GROUP DATA ELEMENT MAY BE TALLIED. See Section 6.3 for a list of the FPEIS data base structure which will identify repeating groups. Use of the SPANS operator means that all values in the range given will be checked.

Example 2: TALLY With User-Initiated Abort

```
@add fpeis.tally#
CTS   6R1   10:44:11
THE ASSUMED MODE IS FIELDATA
FILE NAME = 44
ENTER 'W' IF TALLY-WHERE, 'A' IF TALLY-ALL >w#
ENTER COMPONENT NUMBER OF DATA
ELEMENT TO BE TALLYED >C1410#
ENTER QUALIFIER DATA AS COMPONENT NUMBER,VALUE
IF NO MORE, ENTER LAST >C310 spans#
ENTER QUALIFIER DATA AS COMPONENT NUMBER,VALUE
IF NO MORE, ENTER LAST >kill#
JOB KILLED
IN EXEC MODE
>
```

This shows that the SRC may be aborted by the user simply by entering the command "KILL."

Example 3: TALLY WHERE With Single Qualifier

```
@add fpeis.tally#
CTS   6R1   10:46:05
THE ASSUMED MODE IS FIELDATA
FILE NAME = 46
ENTER 'W' IF TALLY-WHERE, 'A' IF TALLY-ALL >w#
ENTER COMPONENT NUMBER OF DATA
ELEMENT TO BE TALLYED >1410#
ENTER QUALIFIER DATA AS COMPONENT NUMBER,VALUE
IF NO MORE, ENTER LAST >C310 spans 1*10#
ENTER QUALIFIER DATA AS COMPONENT NUMBER,VALUE
IF NO MORE, ENTER LAST >last#
IN EXEC MODE
CASE UPPER ASSUMED
FILE IN FIELD 1 DISABLED--ACCEPTED
WARNING:  NEW ELEMENT WILL REPLACE EXISTING ELEMENT
ED  15R2-WED-05/24/78-10:49:29-(,0)
INPUT
EDIT
LINES:6 FIELDATA
  05/24/78   10:50:24    BEGIN SYSTEM 2000   VERSION 2.80D
---
 -556- ASSIGNED...TFPEISC                12    28443    05/09/78  11:44:44
---
   NO ERRORS HAVE OCCURRED
---
 -399- SELECTED RG IS 1400   -
---
---
 ************************
  TALLY WHERE FOR (CHEMICAL ID)
 ************************
 FREQUENCY VALUE
 -----------------------
        96       -NULL-
         3        2103
         3        2110
         3        2112
         3        2114
         3        2128
         2        2142
         3        2167
 -----------------------
         8 UNIQUE VALUES
 -----------------------
       116 OCCURRENCES
 -----------------------
```

```
---
 05/24/78   10:53:12   END   SYSTEM 2000   VERSION 2.80D
FURPUR 27R3 E33 SL73R1 05/24/78 10:53:35
>
```

The SPANS operator means that C1410 will be tallied where C310 assumes all values between 1 and 10.

Example 4: TALLY ALL With Multiple Qualifier

```
@add fpeis.tally#
CTS   6R1   10:54:14
THE ASSUMED MODE IS FIELDATA
FILE NAME = 54
ENTER 'W' IF TALLY-WHERE, 'A' IF TALLY-ALL >a#
ENTER COMPONENT NUMBER OF DATA
ELEMENT TO BE TALLYED >1410#
ENTER QUALIFIER DATA AS COMPONENT NUMBER,VALUE
IF NO MORE, ENTER LAST >C1410 exists and#
ENTER QUALIFIER DATA AS COMPONENT NUMBER,VALUE
IF NO MORE, ENTER LAST >C310 Spans 1*10#
ENTER QUALIFIER DATA AS COMPONENT NUMBER,VALUE
IF NO MORE, ENTER LAST >last#
IN EXEC MODE
CASE UPPSER ASSUMED
FILE IN FIELD 1 DISABLED--ACCEPTED
WARNING:  NEW ELEMENT WILL REPLACE EXISTING ELEMENT
ED 15R2-WED-05/24/78-10:56:55-(,0)
INPUT
EDIT
LINES:7 FIELDATA
 05/24/78  10:57:19  BEGIN SYSTEM 2000  VERSION 2.80D
---
 -556- ASSIGNED...TFPEISC          12   28443  05/09/78   11:44:44
---
   NO ERRORS HAVE OCCURRED
---
 -399- SELECTED RG IS 1400
---
---
---
 ************************
 TALLY ALL WHERE FOR (CHEMICAL ID)
 ************************
 MINIMUM   2103
 Maximum   2167
 ************************
        7 UNIQUE VALUES
 ------------------------
       20 OCCURRENCES
```

```
---
 05/24/78  10:58:15  END  SYSTEM 2000  VERSION 2.80D
  FURPUR 27R3 E33 SL73R1 05/24/78 10:58:19
>
```

This example uses the EXISTS operator as well as the SPANS operator. Comparison with Example 3 shows that the 96 -NULL- values have been eliminated.

5.4.2 Batch Processing Procedure

SRC-4 is not available to batch users since it utilizes the UNIVAC 1100 Conversational Time Sharing (CTS) processor.

5.5 SRC NUMBER: SRC-5

TITLE: PRINT WHERE

ABSTRACT:

The PRINT WHERE command (SRC-5) enables the user to screen data in the FPEIS while searching for a specific piece of information; that is, it aids data searching by allowing users to move from general to more specific selection criteria. This concept is best illustrated by an example: a user wants to know if there are any data in the FPEIS from copper smelters that use electrostatic precipitators as control devices. The PRINT WHERE command will enable the user to obtain a list of Test Series Numbers that meet the given selection criteria. The user may then obtain SERIES reports for each Test Series Number using SRC-1.

In using the PRINT WHERE command, the user has available a variety of data elements to select for both sorting and qualification. Up to three levels of qualification are permitted. For example, a user may print the measurement equipment method/name where the Test Series Number equals a given value and the Subseries Number equals a given value and the Run Number equals a given value.

USER INPUT DATA REQUIRED:

The user must supply the component number of each data element to be printed. Both key and nonkey data elements may be selected. Data elements and component numbers for the FPEIS data base are given in Section 6.3.

DATA QUALIFICATION REQUIRED:

Data elements to be printed must be qualified by one or more KEY data elements in the WHERE clause. Multiple data elements in the WHERE clause may be separated by AND or OR, and may use the logic operators: EQ, NE, GT, LT, GE, and LE. Data may also be qualified by determining the presence (EXISTS) of a data element or its absence (FAILS). A tabulation of key data elements is given in Section 6.4.

For more details on the attributes of the qualification data (e.g., WHERE clause), the user should refer to the SYSTEM 2000 REFERENCE MANUAL.

5.5.1 Demand Processing Procedure

SRG-5 should be executed using a demand (interactive) terminal. Since the possible combinations of data to be printed and qualified are almost infinite, the use of SRG-5 is best shown by example. In the following examples, it is assumed that the user has established communications with the computer in accordance with the procedure described in Section 4.2, and is ready to enter a command. For clarity, all user-supplied data are shown in lower case letters and all computer responses in capital letters. A user-supplied carriage return is shown by the # sign. Note that the first four examples illustrate aborted runstreams.

Example 1: Missing Qualification Data

```
>@add fpeis.print-where#
CTS   6R1    09:51:45
THE ASSUMED MODE IS FIELDATA
FILE NAME = 51
ENTER COMPONENT NUMBER OF DATA ELEMENT
  TO BE PRINTED, IF NO MORE, ENTER LAST >310#
ENTER THE COMPONENT NUMBER OF DATA ELEMENT
 TO BE PRINTED, IF NO MORE, ENTER LAST >last#
ENTER COMPONENT NUMBER OF DATA ELEMENT
BY WHICH DATA ARE TO BE ORDERED
 IF NO ORDER, JUST PRESS RETURN >#
ENTER QUALIFICATION DATA AS COMPONENT NUMBER
 IF NO MORE, ENTER LAST >#
JOB KILLED (No QUALIFICATION DATA INPUT)
IN EXEC MODE
>
```

Example 2: No Data Input

```
@add fpeis.print-where#
CTS     6R1     09:41:15
THE ASSUMED MODE IS FIELDATA
FILE NAME = 41
ENTER COMPONENT NUMBER OF DATA ELEMENT
 TO BE PRINTED. IF NO MORE, ENTER LAST >#
JOB KILLED (NO COMPONENT NUMBER INPUT)
IN EXEC MODE
>
```

Example 3: User Initiated Abort

```
@add fpeis.print-where#
CTS   6R1   10:41:20
THE ASSUMED MODE IS FIELDATA
FILE NAME = 41
ENTER COMPONENT NUMBER OF DATA ELEMENT
 TO BE PRINTED. IF NO MORE, ENTER LAST >310#
ENTER COMPONENT NUMBER OF DATA ELEMENT
 TO BE PRINTED, IF NO MORE, ENTER LAST >last#
ENTER COMPONENT NUMBER OF DATA ELEMENT
BY WHICH DATA ARE TO BE ORDERED
 IF NO ORDER, JUST PRESS RETURN >310#
ENTER COMPONENT NUMBER OF DATA ELEMENT
BY WHICH DATA ARE TO BE ORDERED
 IF NO ORDER, JUST PRESS RETURN >#
ENTER QUALIFICATION DATA AS COMPONENT NUMBER
 If NO MORE, ENTER LAST >kill#                    *Note*Enter KILL
JOB KILLED                                        to abort the SRC
IN EXEC MODE
>
```

Example 4: User Initiated Abort

```
@add fpeis.print-where#
CTS   6R1   10:42:36
THE ASSUMED MODE IS FIELDATA
FILE NAME = 42
ENTER COMPONENT NUMBER OF DATA ELEMENT
 TO BE PRINTED. IF NO MORE, ENTER LAST >300#
ENTER COMPONENT NUMBER OF DATA ELEMENT
 TO BE PRINTED, IF NO MORE, ENTER LAST >last#
ENTER COMPONENT NUMBER OF DATA ELEMENT
BY WHICH DATA ARE TO BE ORDERED
 IF NO ORDER, JUST PRESS RETURN >310#
ENTER COMPONENT NUMBER OF DATA ELEMENT
BY WHICH DATA ARE TO BE ORDERED
 IF NO ORDER, JUST PRESS RETURN >C310 gt 5 and#
ENTER COMPONENT NUMBER OF DATA ELEMENT
BY WHICH DATA ARE TO BE ORDERED
 IF NO ORDER, JUST PRESS RETURN >C310 lt 7#
ENTER COMPONENT NUMBER OF DATA ELEMENT
BY WHICH DATA ARE TO BE ORDERED
 IF NO ORDER, JUST PRESS RETURN >last#
ENTER QUALIFICATION DATA AS COMPONENT NUMBER
 IF NO MORE, ENTER LAST >kill#
JOB KILLED
IN EXEC MODE
>
```

Example 5: Single Data Element Print, Single Qualification Value, Single Ordering

```
@add fpeis.print-where#
CTS   6R1   10:23:23
THE ASSUMED MODE IS FIELDATA
FILE NAME = 23
ENTER COMPONENT NUMBER OF DATA ELEMENT
 TO BE PRINTED, IF NO MORE, ENTER LAST >310#
ENTER COMPONENT NUMBER OF DATA ELEMENT
 TO BE PRINTED, IF NO MORE, ENTER LAST >last#
ENTER COMPONENT NUMBER OF DATA ELEMENT
BY WHICH DATA ARE TO BE ORDERED
 IF NO ORDER, JUST PRESS RETURN >310#
ENTER COMPONENT NUMBER OF DATA ELEMENT
BY WHICH DATA ARE TO BE ORDERED
 IF NO ORDER, JUST PRESS RETURN >#
ENTER QUALIFICATION DATA AS COMPONENT NUMBER
 IF NO MORE, ENTER LAST >C310 eq 98#
ENTER QUALIFICATION DATA AS COMPONENT NUMBER
 IF NO MORE, ENTER LAST >last#
IN EXEC MODE
CASE UPPER ASSUMED
 FILE IN FIELD 1 IN USE BY ANOTHER RUN
WARNING:  NEW ELEMENT WILL REPLACE EXISTING ELEMENT
ED 15R2-THU-05/18/78-10:24:34-(,0)
INPUT
EDIT
LINES:10 FIELDATA
 05/18/78  10:24:45  BEGIN SYSTEM 2000  VERSION 2.80D
---
 -556- ASSIGNED...TFPEISC          12  28443  05/09/78  11:44:44
---
---
PRINT/NAME/
---
C310
---
, OB
---
C310
---
WHERE
---
C310 EQ 98
---
```

```
.
.
    TEST SERIES NUMBER *    98
---
EXIT:
 05/18/78  10:25:27  END  SYSTEM 2000  VERSION 2.80D
FURPUR 27R3 E33 SL73R1  05/18/78  10:25:36
>
```

Example 6: Multiple Data Element Print, Single Qualification Value, Single Ordering

```
@add fpeis.print-where#
CTS   6R1   10:25:56
THE ASSUMED MODE IS FIELDATA
FILE NAME = 26
ENTER COMPONENT NUMBER OF DATA ELEMENT
 TO BE PRINTED, IF NO MORE, ENTER LAST >310#
ENTER COMPONENT NUMBER OF DATA ELEMENT
 TO BE PRINTED, IF NO MORE, ENTER LAST >320#
ENTER COMPONENT NUMBER OF DATA ELEMENT
 TO BE PRINTED, IF NO MORE, ENTER LAST >last#
ENTER COMPONENT NUMBER OF DATA ELEMENT
BY WHICH DATA ARE TO BE ORDERED
 IF NO ORDER, JUST PRESS RETURN >#
ENTER QUALIFICATION DATA AS COMPONENT NUMBER
 IF NO MORE, ENTER LAST >310 eq 98#
ENTER QUALIFICATION DATA AS COMPONENT NUMBER
 IF NO MORE, ENTER LAST >last#
IN EXEC MODE
CASE UPPER ASSUMED
 FILE IN FIELD 1 DISABLED--ACCEPTED
FILE IN FIELD 1 IN USE BY ANOTHER RUN
WARNING:  NEW ELEMENT WILL REPLACE EXISTING ELEMENT
ED 15R2-THU-05/18/78-10:26:53-(,0)
INPUT
EDIT
LINES:9 FIELDATA
 05/18/78  10:27:11  BEGIN SYSTEM 2000  VERSION 2.80D
---
 -556- ASSIGNED...TFPEISC          12  28443   05/09/78   11:44:44
---
---
PRINT/NAME/
---
C310
---
,C320
---
 WHERE
---
C310 EQ 98
---
.
.
     TEST SERIES NUMBER*   98
     TEST SERIES REFERENCE* MONSANTO REPORT OF 17 MARCH 75 FOR EPA CONTRACT
          68-02-1816
```

```
---
EXIT:
  05/18/78  10:27:31  END  SYSTEM 2000 VERSION 2.80D
FURPUR 27R3 E33 SL73R1 05/18/78 10:27:35
>
```

Example 7: Multiple Data Element Print, Single Qualification Value, Multiple Ordering

```
@add fpeis.print-where#
GTS   6R1   10:38:45
THE ASSUMED MODE IS FIELDATA
FILE NAME = 38
ENTER COMPONENT NUMBER OF DATA ELEMENT
  TO BE PRINTED, IF NO MORE, ENTER LAST >310#
ENTER COMPONENT NUMBER OF DATA ELEMENT
  TO BE PRINTED, IF NO MORE, ENTER LAST >320#
ENTER COMPONENT NUMBER OF DATA ELEMENT
  TO BE PRINTED, IF NO MORE, ENTER LAST >last#
ENTER COMPONENT NUMBER OF DATA ELEMENT
BY WHICH DATA ARE TO BE ORDERED
  IF NO ORDER, JUST PRESS RETURN >310#
ENTER COMPONENT NUMBER OF DATA ELEMENT
BY WHICH DATA ARE TO BE ORDERED
  IF NO ORDER, JUST PRESS RETURN >320#
ENTER COMPONENT NUMBER OF DATA ELEMENT
BY WHICH DATA ARE TO BE ORDERED
 IF NO ORDER, JUST PRESS RETURN >#
ENTER QUALIFICATION DATA AS COMPONENT NUMBER
  IF NO MORE, ENTER LAST >C310 eq 98#
ENTER QUALIFICATION DATA AS COMPONENT NUMBER
  IF NO MORE, ENTER LAST >last#
IN EXEC MODE
CASE UPPER ASSUMED
FILE IN FIELD 1 DISABLED--ACCEPTED
FILE IN FIELD 1 IN USE BY ANOTHER RUN
WARNING:  NEW ELEMENT WILL REPLACE EXISTING ELEMENT
ED 15R2-THU-05/18/78-10:39:52-(,0)
INPUT
EDIT
LINES:12 FIELDATA
 05/18/78  10:40:05  BEGIN   SYSTEM 2000  VERSION   2.80D
---
 -556- ASSIGNED...TFPEISC          12   28443  05/09/78  11:44:44
---
---
PRINT/NAME/
---
C310
---
,C320
---
, OB
---
C310
```

```
---
,C320
---
 WHERE
---
C310 EQ 98
---
        TEST SERIES NUMBER*     98
        TEST SERIES REFERENCE* MONSANTO REPORT OF 17 MARCH 75 FOR EPA
          CONTRACT 68-02-1816
---
EXIT:
 05/18/78  10:40:41  END  SYSTEM 2000  VERSION 2.80D
FURPUR 27R3 E33 SL73R1 05/18/78 10:40:54
>
```

Example 8: Multiple Data Element Print, Multiple Qualification Values, Multiple Ordering

```
@add fpeis.print-where#
CTS    6R1  11:01:30
THE ASSUMED MODE IS FIELDATA
FILE NAME = 01
ENTER COMPONENT NUMBER OF DATA ELEMENT
 TO BE PRINTED, IF NO MORE, ENTER LAST >310#
ENTER COMPONENT NUMBER OF DATA ELEMENT
 TO BE PRINTED, IF NO MORE, ENTER LAST >320#
ENTER COMPONENT NUMBER OF DATA ELEMENT
 TO BE PRINTED, IF NO MORE, ENTER LAST >last#
ENTER COMPONENT NUMBER OF DATA ELEMENT
BY WHICH DATA ARE TO BE ORDERED
 IF NO ORDER, JUST PRESS RETURN >310#
ENTER COMPONENT NUMBER OF DATA ELEMENT
BY WHICH DATA ARE TO BE ORDERED
 IF NO ORDER, JUST PRESS RETURN >320#
ENTER COMPONENT NUMBER OF DATA ELEMENT
BY WHICH DATA ARE TO BE ORDERED
 IF NO ORDER, JUST PRESS RETURN >#
ENTER QUALIFICATION DATA AS COMPONENT NUMBER
 IF NO MORE, ENTER LAST >C310 gt 5 and#
ENTER QUALIFICATION DATA AS COMPONENT NUMBER
 IF NO MORE, ENTER LAST >C310 lt 7#
ENTER QUALIFICATION DATA AS COMPONENT NUMBER
 IF NO MORE, ENTER LAST >last#
IN EXEC MODE
CASE UPPER ASSUMED
FILE IN FIELD 1 DISABLED--ACCEPTED
FILE IN FIELD 1 IN USE BY ANOTHER RUN
WARNING:  NEW ELEMENT WILL REPLACE EXISTING ELEMENT
ED 15R2-THU-05/18/78-11:03:10-(,0)
INPUT
EDIT
LINES:13 FIELDATA
 05/18/78  11:03:27  BEGIN SYSTEM 2000  VERSION 2.80D
---
 -556- ASSIGNED...TFPEISC          12  28443  05/09/78  11:44:44
---
---
PRINT/NAME/
---
C310
---
,C320
```

```
---
, OB
---
C310
---
,C320
---
 WHERE
---
C310 GT 5 AND
---
C310 LT 7
---
.
.
        TEST SERIES NUMBER*       6
        TEST SERIES REFERENCE*   STATNICK, R.M., EPA-650/2-74-111 OCT
                                      74
---
EXIT:
 05/18/78  11:04:07  END  SYSTEM 2000  VERSION   2.80D
FURPUR 27R3 E33 SL73R1  05/18/78  11:04:19
>
```

Note that the AND which appears on the first line of qualification data follows the C310 GT 5. The same is true for the Boolean OR. Both must appear on the <u>same</u> line as the qualification statement.

Example 9: User of Qualifier EXISTS

```
@add fpeis.print-where#
CTS   6R1    10:22:27
THE ASSUMED MODE IS FIELDATA
FILE NAME = 24
ENTER COMPONENT NUMBER OF DATA ELEMENT
TO BE PRINTED, IF NO MORE, ENTER LAST >1520#
ENTER COMPONENT NUMBER OF DATA ELEMENT
TO BE PRINTED, IF NO MORE, ENTER LAST >last#
ENTER COMPONENT NUMBER OF DATA ELEMENT
BY WHICH DATA ARE TO BE ORDERED
IF NO ORDER, JUST PRESS RETURN >#
ENTER QUALIFICATION DATA AS COMPONENT NUMBER
IF NO MORE, ENTER LAST >C310 eq 6 and#
ENTER QUALIFICATION DATA AS COMPONENT NUMBER
IF NO MORE, ENTER LAST >C1505 exists#
ENTER QUALIFICATION DATA AS COMPONENT NUMBER
IF NO MORE, ENTER LAST >last#
IN EXEC MODE
AUTO FILE CONTAINS FPEIS*TSTART(1).PRINT(0)
CASE UPPER ASSUMED
FILE IN FIELD 1 DISABLED--ACCEPTED
WARNING:  NEW ELEMENT WILL REPLACE EXISTING ELEMENT
ED 15R2-WED-05/24/78-10:28:01-(,0)
INPUT
EDIT
LINES:9 FIELDATA
 05/24/78  10:28:22  BEGIN  SYSTEM 2000  VERSION   2.80D
---
 -556- ASSIGNED...TFPEISC            12  28443  05/09/78  11:44:44
---
---
PRINT/NAME/
---
C1520
---
 WHERE
---
C310 EQ 6 and
---
C1505 EXISTS
---
.
.
      MEASUREMENT INSTRUMENT/METHOD NAME* ANDERSEN MODEL III IMPACTOR
---
EXIT:
 05/24/78  10:29:03  END  SYSTEM 2000  VERSION  2.80D
FURPUR 27R3 E33  SL73R1  05/24/78  10:29:10
>
```

Example 10: Use of Qualifiers FAILS and SPANS

```
@add fpeis.print-where#
CTS   6R1   10:29:28
THE ASSUMED MODE IS FIELDATA
FILE NAME = 29
ENTER COMPONENT NUMBER OF DATA ELEMENT
TO BE PRINTED, IF NO MORE, ENTER LAST >310#
ENTER COMPONENT NUMBER OF DATA ELEMENT
TO BE PRINTED, IF NO MORE, ENTER LAST >last#
ENTER COMPONENT NUMBER OF DATA ELEMENT
BY WHICH DATA ARE TO BE ORDERED
IF NO ORDER, JUST PRESS RETURN >310#
ENTER COMPONENT NUMBER OF DATA ELEMENT
BY WHICH DATA ARE TO BE ORDERED
IF NO ORDER, JUST PRESS RETURN >#
ENTER QUALIFICATION DATA AS COMPONENT NUMBER
IF NO MORE, ENTER LAST >C1410 fails and#
ENTER QUALIFICATION DATA AS COMPONENT NUMBER
IF NO MORE, ENTER LAST >C310 spans 1*10#
ENTER QUALIFICATION DATA AS COMPONENT NUMBER
IF NO MORE, ENTER LAST >last#
IN EXEC MODE
CASE UPPER ASSUMED
FILE IN FIELD 1 DISABLED--ACCEPTED
WARNING:  NEW ELEMENT WILL REPLACE EXISTING ELEMENT
ED 15R2-WED-05/24/78-10:31:44-(,0)
INPUT
EDIT
LINES:11 FIELDATA
 05/24/78  10:31:59  BEGIN  SYSTEM 2000  VERSION  2.80D
---
 -556- ASSIGNED...TFPEISC            12   28443  05/09/78  11:44:44
---
---
PRINT/NAME/
---
C310
---
, OB
---
C310
---
 WHERE
---
C1410 FAILS AND
---
```

```
C310 SPANS 1*10
---
.
.
          TEST SERIES NUMBER*     1
          TEST SERIES NUMBER*     2
          TEST SERIES NUMBER*     3
          TEST SERIES NUMBER*     4
          TEST SERIES NUMBER*     5
          TEST SERIES NUMBER*     8
          TEST SERIES NUMBER*     9
          TEST SERIES NUMBER*    10
---
EXIT:
  05/24/78   10:32:27   END  SYSTEM 2000  VERSION 2.80D
FURPUR 27R3 E33 SL73R1  05/24/78   10:32:31
>
```

5.5.2 Batch Processing Procedure

SRC-5 is not available to batch users since it utilizes the UNIVAC 1100 Conversational Time Sharing (CTS) processor.

5.6 SRC NUMBER: SRC-6

TITLE: Chemical Data Search (CHEMSEARCH)

The CHEMSEARCH command (SRC-6) enables the user to search all or part of the FPEIS data base for the presence of a particular chemical species. The user must supply a chemical identification number, and, if he wishes to search only a part of the data base, he must also specify the Test Series Number(s). Chemical ID's permitted include SAROAD/SOTDAT, Multi-Media Environmental Goals (MEG's), Chemical Abstracts Services (CAS) Registration Numbers, and Level 1 Fractions. Any of these chemical ID's may be used.

The output from SRC-6 will identify the particular test series in which the chemical species of interest appears. The user may then retrieve the SERIES report using SRC-1.

USER INPUT DATA REQUIRED:

- Valid Chemical Entry Code (C1405). Select from:

  S = SAROAD/SOTDAT ID
  M = MEG Number
  C = CAS Registration Number
  F = EA Level 1 Fraction

- Valid Chemical ID Code (C1410) which corresponds to the entry code selected.

DATA QUALIFICATION REQUIRED:

The user must indicate whether he wishes to scan the entire data base, or part of the data base as indicated by entering a range of Test Series Numbers.

5.6.1 Demand Processing Procedure

The user shall establish communications with the NCC UNIVAC 1100 computer according to the procedure given in Section 4.2 of this document. Since the possible combination of chemical species to be located and Test Series Numbers to be scanned are almost infinite, the use of SRC-6 is best shown by example. For clarity, all user-supplied data are shown in lower case letters and all computer responses in capital letters. A user-supplied carriage return is shown by the pound (#) sign.

5.6.1.1 Use of SAROAD/SOTDAT CHEMICAL ID

The following examples illustrate the use of SRC-6 with the SAROAD/SOTDAT CHEMICAL ID system being employed.

Example 1: Invalid SAROAD/SOTDAT Number

```
>@add fpeis.chemsearch#
CTS    6R1  14:30:11
THE ASSUMED MODE IS FIELDATA
FILE NAME = 3013
ENTER CHEMICAL ENTRY CODE (S,C,M,OR F) >s#
ENTER SAROAD NUMBER >3333#
ENTER TEST SERIES NUMBERS TO BE SCANNED
AS FIRST,LAST. IF ENTIRE DATA BASE
IS TO BE SCANNED, JUST PRESS RETURN >#
IN EXEC MODE
CASE UPPER ASSUMED
FILE IN FIELD 1 DISABLED--ACCEPTED
WARNING:  NEW ELEMENT WILL REPLACE EXISTING ELEMENT
ED 15R2-THU-05/25/78-14:30:43-(,0)
INPUT
EDIT
LINES:2 FIELDATA
INVALID CHEMICAL DATA
FURPUR 27R3 E33 SL73R1 05/25/78 14:31:00
>
```

This means that no such SAROAD number exists.

Example 2: Invalid Entry Code with Correction Applied

```
> @add fpeis.chemsearch#
CTS     6R1   14:18:43
THE ASSUMED MODE IS FIELDATA
FILE NAME = 1847
ENTER CHEMICAL ENTRY CODE (S,C,M,OR F) >r#
INVALID ENTRY CODE
ENTER CHEMICAL ENTRY CODE (S,C,M,OR F) >s#
ENTER SAROAD NUMBER >2103
ENTER TEST SERIES NUMBERS TO BE SCANNED
AS FIRST,LAST. IF ENTIRE DATA BASE
IS TO BE SCANNED, JUST PRESS RETURN >#
IN EXEC MODE
CASE UPPER ASSUMED
FILE IN FIELD 1 DISABLED--ACCEPTED
WARNING:  NEW ELEMENT WILL REPLACE EXISTING ELEMENT
ED 15R2-THY-05/25/78-14:19:19-(,0)
INPUT
EDIT
LINES:2 FIELDATA
SAROAD NUMBER*        2103
MEG NUMBER*           49A000
PREFERRED NAME*       ARSENIC
EMPIRICAL FORMULA*    AS
MOLECULAR WEIGHT*     0074.92
CAS NUMBER*           07440-38-2
OTHER NAMES*
 METALLIC ARSENIC
 BLACK ARSENIC

THE FOLLOWING SERIES WERE FOUND IN THE ENTIRE DATA BASE.
00006
00007
FURPUR 27R3 E33 SL73R1 05/25/78 14:19:48
>
```

Note that SRC-6 allows the user to re-enter the entry code if a bad value has been entered.

Example 3: Invalid SAROAD Number Length with Correction Applied

```
>add fpeis.chemsearch#
CTS   6R1   13:53:28
THE ASSUMED MODE IS FIELDATA
FILE NAME = 530
ENTER CHEMICAL ENTRY CODE (S,C,M,OR F) >s#
ENTER SAROAD NUMBER >21034#
INVALID LENGTH FOR SAROAD NUMBER (NOT 4)
ENTER CHEMICAL ENTRY CODE (S,C,M,OR F) >s#
ENTER SAROAD NUMBER >2103#
ENTER TEST SERIES NUMBERS TO BE SCANNED
AS FIRST, LAST. IF ENTIRE DATA BASE
IS TO BE SCANNED, JUST PRESS RETURN >#
IN EXEC MODE
CASE UPPER ASSUMED
FILE IN FIELD 1 DISABLED--ACCEPTED
WARNING:  NEW ELEMENT WILL REPLACE EXISTING ELEMENT
ED 15R2-THU-05/25/78-13:53:33-(,0)
INPUT
EDIT
LINES:2 FIELDATA
SAROAD NUMBER*        2103
MEG NUMBER*           49A000
PREFERRED NAME*       ARSENIC
EMPIRICAL FORMULA*    AS
MOLECULAR WEIGHT*     0074.92
CAS NUMBER*           07440-38-2
OTHER NAMES*
 METALLIC ARSENIC
 BLACK ARSENIC

THE FOLLOWING SERIES WERE FOUND IN THE ENTIRE DATA BASE.
00006
00007
FURPUR 27R3 E33 SL73R1  05/25/78 13:53:55
>
```

Example 4: Miscellaneous Input Errors with Correction Applied

```
>@add fpeis.chemsearch#
CTS    6R1   13:09:01
THE ASSUMED MODE IS FIELDATA
FILE NAME = 0903
ENTER CHEMICAL ENTRY CODE (S,C,M,OR F) >s#
ENTER SAROAD NUMBER >2128
ENTER TEST SERIES NUMBERS TO BE SCANNED
AS FIRST, LAST. IF ENTIRE DATA BASE
IS TO BE SCANNED, JUST PRESS RETURN >0,0000009#
INVALID LAST SERIES NUMBER
ENTER TEST SERIES NUMBERS TO BE SCANNED
AS FIRST,LAST. IF ENTIRE DATA BASE
IS TO BE SCANNED, JUST PRESS RETURN >0000000,0000009#
SCANNED FIELD TOO LARGE (GREATER THAN 11)
ENTER TEST SERIES NUMBERS TO BE SCANNED
AS FIRST,LAST. IF ENTIRE DATA BASE
IS TO BE SCANNED, JUST PRESS RETURN >0000000,9#
INVALID FIRST SERIES NUMBER
ENTER TEST SERIES NUMBERS TO BE SCANNED
AS FIRST, LAST. IF ENTIRE DATA BASE
IS TO BE SCANNED, JUST PRESS RETURN >1,9#
IN EXEC MODE
CASE UPPER ASSUMED
FILE IN FIELD 1 DISABLED--ACCEPTED
WARNING:  NEW ELEMENT WILL REPLACE EXISTING ELEMENT
ED 15R2-FRI-05/26/78-13:10:19-(,0)
INPUT
EDIT
LINES:2 FIELDATA
SAROAD NUMBER*       2128
MEG NUMBER*          46A000
PREFERRED NAME*      LEAD
EMPIRICAL FORMULA*   PB
MOLECULAR WEIGHT*    0207.22
CAS NUMBER*          07439-92-1
OTHER NAMES*
  PLUMBUM

THE FOLLOWING SERIES WERE FOUND BETWEEN SERIES 00001 AND 00009
0006
0007
FURPUR 27R3 E33 SL73R1  05/26/78 13:10:40
>
```

Example 5: Partial Data Base Scan (No Errors)

```
>@add fpeis.chemsearch#
CTS     6R1  13:52:21
THE ASSUMED MODE IS FIELDATA
FILE NAME = 5223
ENTER CHEMICAL ENTRY CODE (S,C,M,OR F) >s#
ENTER SAROAD NUMBER >2103#
ENTER TEST SERIES NUMBERS TO BE SCANNED
AS FIRST,LAST. IF ENTIRE DATA BASE
IS TO BE SCANNED, JUST PRESS RETURN >1,6#
IN EXEC MODE
CASE UPPER ASSUMED
FILE IN FIELD 1 DISABLED--ACCEPTED
WARNING:  NEW ELEMENT WILL REPLACE EXISTING ELEMENT
ED 15R2-THU-05/25/78-13:52:45-(,0)
INPUT
EDIT
LINES:2 FIELDATA
SAROAD NUMBER*       2103
MEG NUMBER*          49A000
PREFERRED NAME*      ARSENIC
EMPIRICAL FORMULA    AS
MOLECULAR WEIGHT*    0074.92
CAS NUMBER*          07440-38-2
OTHER NAMES*
  METALLIC ARSENIC
  BLACK ARSENIC

THE FOLLOWING SERIES WERE FOUND BETWEEN SERIES 00001 AND 00006
00006
FURPUR 27R3 E33 SL73R1  05/25/78  13:53:05
>
```

Example 6: Full Data Base Scan (No Errors)

```
>@add fpeis.chemsearch#
CTS    6R1   12:58:51
THE ASSUMED MODE IS FIELDATA
FILE NAME = 5852
ENTER CHEMICAL ENTRY CODE (S,C,M,OR F) >s#
ENTER SAROAD NUMBER >2103#
ENTER TEST SERIES NUMBERS TO BE SCANNED
AS FIRST,LAST. IF ENTIRE DATA BASE
IS TO BE SCANNED, JUST PRESS RETURN >#
IN EXEC MODE
CASE UPPER ASSUMED
FILE IN FIELD 1 DISABLED--ACCEPTED
WARNING:  NEW ELEMENT WILL REPLACE EXISTING ELEMENT
ED 15R2-FRI-05/26/78-12:59:22-(,0)
INPUT
EDIT
LINES:2 FIELDATA
SAROAD NUMBER*          2103
MEG NUMBER*             49A000
PREFERRED NAME*         ARSENIC
EMPIRICAL FORMULA*      AS
MOLECULAR WEIGHT*       0074.92
CAS NUMBER*             07440-38-2
OTHER NAMES*
  METALLIC ARSENIC
  BLACK ARSENIC

THE FOLLOWING SERIES WERE FOUND IN THE ENTIRE DATA BASE.
00006
00007
FURPUR 27R3 E33 SL73R1 05/26/78 13:00:15
>
```

5.6.1.2 Use of Multimedia Environmental Goals (MEG) Numbers

The following examples illustrate the use of SRC-6 with the Multimedia Environmental Goals chemical ID system being employed.

Example 1: Invalid MEG Number

```
>@add fpeis.chemsearch#
CTS     6R1  16:14:12
THE ASSUMED MODE IS FIELDATA
FILE NAME = 1414
ENTER CHEMICAL ENTRY CODE (S,C,M,OR F) >m#
ENTER MEG NUMBER >49a125#
ENTER TEST SERIES NUMBERS TO BE SCANNED
AS FIRST,LAST. IF ENTIRE DATA BASE
IS TO BE SCANNED, JUST PRESS RETURN >#
IN EXEC MODE
CASE UPPER ASSUMED
FILE IN FIELD 1 DISABLED--ACCEPTED
WARNING:  NEW ELEMENT WILL REPLACE EXISTING ELEMENT
ED 15R2-FRI-05/26/78-16:13:21-(,0)
INPUT
EDIT
LINES:2 FIELDATA

INVALID CHEMICAL DATA

FURPUR 27R3 E33 SL73R1  05/26/78 16:13:40
>
```

This indicates that 49A125 is not a valid MEG Number even though it is in the proper format.

Example 2: Invalid MEG Number Length With Correction Applied

```
>@add fpeis.chemsearch#
CTS    6R1   13:02:51
THE ASSUMED MODE IS FIELDATA
FILE NAME = 0254
ENTER CHEMICAL ENTRY CODE (S,C,M,OR F) >m#
ENTER MEG NUMBER >123-12-3#
INVALID LENGTH FOR MEG NUMBER (NOT 6)
ENTER CHEMICAL ENTRY CODE (S,C,M,OR F) >m#
ENTER MEG NUMBER >49a000#
ENTER TEST SERIES NUMBERS TO BE SCANNED
AS FIRST,LAST. IF ENTIRE DATA BASE
IS TO BE SCANNED, JUST PRESS RETURN >#
IN EXEC MODE
CASE UPPER ASSUMED
FILE IN FIELD 1 DISABLED--ACCEPTED
WARNING:  NEW ELEMENT WILL REPLACE EXISTING ELEMENT
ED 15R2-FRI-05/26/78-13:03:54-(,0)
INPUT
EDIT
LINES:2 FIELDATA
SAROAD NUMBER*          2103
MEG NUMBER*             49A000
PREFERRED NAME*         ARSENIC
EMPIRICAL FORMULA*      AS
MOLECULAR WEIGHT*       0074.92
CAS NUMBER*             07440-38-2
OTHER NAMES*
  METALLIC ARSENIC
  BLACK ARSENIC

THE FOLLOWING SERIES WERE FOUND IN THE ENTIRE DATA BASE.
00006
00007
FURPUR 27R3 E33 SL73R1  05/26/78  13:04:17
>
```

Example 3: Partial Data Base Scan (No Errors)

```
>@add fpeis.chemsearch#
CTS    6R1   13:04:46
THE ASSUMED MODE IS FIELDATA
FILE NAME = 0447
ENTER CHEMICAL ENTRY CODE (S,C,M,OR F) >m#
ENTER MEG NUMBER >46a000#
ENTER TEST SERIES NUMBERS TO BE SCANNED
AS FIRST,LAST. IF ENTIRE DATA BASE
IS TO BE SCANNED, JUST PRESS RETURN >1,50#
IN EXEC MODE
CASE UPPER ASSUMED
FILE IN FIELD 1 DISABLED--ACCEPTED
WARNING:  NEW ELEMENT WILL REPLACE EXISTING ELEMENT
ED 15R2-FRI-05/26/78-13:05:15-(,0)
INPUT
EDIT
LINES:2 FIELDATA
SAROAD NUMBER*          2128
MEG NUMBER*             46A000
PREFERRED NAME*         LEAD
EMPIRICAL FORMULA*      PB
MOLECULAR WEIGHT*       0207.22
CAS NUMBER*             07439-92-1
OTHER NAMES*
  PLUMBUM

THE FOLLOWING SERIES WERE FOUND BETWEEN SERIES 00001 AND 00050
00006
00007
00013
00025
00026
00027
00032
00043
00044
00045
00046
FURPUR 27R3 E33 SL73R1 05/26/78 13:05:47
>
```

Example 4: Full Data Base Scan (No Errors)

```
>@add fpeis.chemsearch#
CTS    6R1   14:02:47
THE ASSUMED MODE IS FIELDATA
FILE NAME = 0250
ENTER CHEMICAL ENTRY CODE (S,C,M,OR F) >m#
ENTER MEG NUMBER >49a000#
ENTER TEST SERIES NUMBERS TO BE SCANNED
AS FIRST,LAST. IF ENTIRE DATA BASE
IS TO BE SCANNED, JUST PRESS RETURN >#
IN EXEC MODE
CASE UPPER ASSUMED
FILE IN FIELD 1 DISABLED--ACCEPTED
WARNING:  NEW ELEMENT WILL REPLACE EXISTING ELEMENT
ED 15R2-THU-05/25/78-14:03:17-(,0)
INPUT
EDIT
LINES:2 FIELDATA
SAROAD NUMBER*        2103
MEG NUMBER*           49A000
PREFERRED NAME*       ARSENIC
EMPIRICAL FORMULA*    AS
MOLECULAR WEIGHT*     0074.92
CAS NUMBER*           07440-38-2
OTHER NAMES*
  METALLIC ARSENIC
  BLACK ARSENIC

THE FOLLOWING SERIES WERE FOUND IN THE ENTIRE DATA BASE.
00006
00007
FURPUR 27R3 E33 SL73R1 05/25/78 14:04:38
>
```

5.6.1.3 Use of Chemical Abstracts Services Registration Numbers

The following examples illustrate the use of SRC-6 with the Chemical Abstracts Services chemical ID system being employed.

Example 1: Invalid CAS Number Length with Correction Applied

```
>@add fpeis.chemsearch#
CTS    6R1    13:06:04
THE ASSUMED MODE IS FIELDATA
FILE NAME = 0606
ENTER CHEMICAL ENTRY CODE (S,C,M,OR F) >c#
ENTER CAS NUMBER >123-12-3#
INVALID LENGTH FOR CAS NUMBER (NOT 10)
ENTER CHEMICAL ENTRY CODE (S,C,M,OR F) >c#
ENTER CAS NUMBER >07439-92-1#
ENTER TEST SERIES NUMBERS TO BE SCANNED
AS FIRST, LAST. IF ENTIRE DATA BASE
IS TO BE SCANNED, JUST PRESS RETURN >#
IN EXEC MODE
CASE UPPER ASSUMED
FILE IN FIELD 1 DISABLED--ACCEPTED
WARNING:  NEW ELEMENT WILL REPLACE EXISTING ELEMENT
ED 15R2-FRI-05/26/78-13:06:46-(,0)
INPUT
EDIT
LINES:2 FIELDATA
SAROAD NUMBER*          2128
MEG NUMBER*             46A000
PREFERRED NAME*         LEAD
EMPIRICAL FORMULA*      PB
MOLECULAR WEIGHT*       0207.22
CAS NUMBER*             07439-92-1
OTHER NAMES*
  PLUMBUM

THE FOLLOWING SERIES WERE FOUND IN THE ENTIRE DATA BASE.
00006
00007
00013
00025
00026
00027
00032
00043
00044
00045
00046
FURPUR 27R3 E33 SL73R1 05/26/78 13:07:11
>
```

Example 2: Invalid CAS Number

```
>@add fpeis.chemsearch#
CTS    6R1    09:15:15
THE ASSUMED MODE IS FIELDATA
FILE NAME = 1518
ENTER CHEMICAL ENTRY CODE (S,C,M,OR F) >c#
ENTER CAS NUMBER >07459-99-9#
ENTER TEST SERIES NUMBERS TO BE SCANNED
AS FIRST,LAST. IF ENTIRE DATA BASE
IS TO BE SCANNED, JUST PRESS RETURN >#
IN EXEC MODE
CASE UPPER ASSUMED
FILE IN FIELD 1 DISABLED--ACCEPTED
WARNING:  NEW ELEMENT WILL REPLACE EXISTING ELEMENT
ED 15R2-TUE-05/30/78-09:15:55-(,0)
INPUT
EDIT
LINES:2 FIELDATA
INVALID CHEMICAL DATA

FURPUR 27R3 E33 SL73R1 05/30/78 09:16:34
>
```

Example 3: Partial Data Base Scan (No Errors)

```
>@add fpeis.chemsearch#
CTS    6R1    09:17:07
THE ASSUMED MODE IS FIELDATA
FILE NAME = 1710
ENTER CHEMICAL ENTRY CODE (S,C,M,OR F) >c#
ENTER CAS NUMBER >07439-92-1#
ENTER TEST SERIES NUMBERS TO BE SCANNED
AS FIRST,LAST. IF ENTIRE DATA BASE
IS TO BE SCANNED, JUST PRESS RETURN >25,35#
IN EXEC MODE
CASE UPPER ASSUMED
FILE IN FIELD 1 DISABLED--ACCEPTED
WARNING:  NEW ELEMENT WILL REPLACE EXISTING ELEMENT
ED 15R2-TUE-05/30/78-09:19:22-(,0)
INPUT
EDIT
LINES:2 FIELDATA
SAROAD NUMBER*          2128
MEG NUMBER*             46A000
PREFERRED NAME*         LEAD
EMPIRICAL FORMULA*      PB
MOLECULAR WEIGHT*       0207.22
CAS NUMBER*             07439-92-1
OTHER NAMES*
  PLUMBUM

THE FOLLOWING SERIES WERE FOUND BETWEEN SERIES 00025 AND 00035
00025
00026
00027
00032

FURPUR 27R3 E33 SL73R1 05/30/78  09:22:26
>
```

Example 4: Full Data Base Scan (No Errors)

```
>@add fpeis.chemsearch#
CTS    6R1    13:07:29
THE ASSUMED MODE IS FIELDATA
FILE NAME = 0731
ENTER CHEMICAL ENTRY CODE (S,C,M,OR F) >c#
ENTER CAS NUMBER >07440-38-2#
ENTER TEST SERIES NUMBERS TO BE SCANNED
AS FIRST, LAST. IF ENTIRE DATA BASE
IS TO BE SCANNED, JUST PRESS RETURN >#
IN EXEC MODE
CASE UPPER ASSUMED
FILE IN FIELD 1 DISABLED--ACCEPTED
WARNING:  NEW ELEMENT WILL REPLACE EXISTING ELEMENT
ED 15R2-FRI-05/26/78-13:08:23-(,0)
INPUT
EDIT
LINES:2 FIELDATA
SAROAD NUMBER*          2103
MEG NUMBER*             49A000
PREFERRED NAME*         ARSENIC
EMPIRICAL FORMULA*      AS
MOLECULAR WEIGHT*       0074.92
CAS NUMBER*             07440-38-2
OTHER NAMES*
  METALLIC ARSENIC
  BLACK ARSENIC

THE FOLLOWING SERIES WERE FOUND IN THE ENTIRE DATA BASE.
00006
00007
FURPUR 27R3 E33 SL73R1 05/25/78 14:02:30
>
```

5.6.1.4 Use of Environmental Assessment Level 1 Fractions

The following examples illustrate the use of SRC-6 with the EA Level 1 Fraction chemical ID system being employed.

The Level 1 Fraction data are identified as FRAC-1 through FRAC-8. Only these values may be used.

Example 1: Invalid Identifier

```
>@add fpeis.chemsearch#
CTS   6R1    16:17:58
THE ASSUMED MODE IS FIELDATA
FILE NAME = 1800
ENTER CHEMICAL ENTRY CODE (S,C,M,OR F) >f#
ENTER LEVEL I FRACTION CHEMICAL ID >level i fraction-3#
ENTER TEST SERIES NUMBERS TO BE SCANNED
AS FIRST, LAST. IF ENTIRE DATA BASE
IS TO BE SCANNED, JUST PRESS RETURN >#
IN EXEC MODE
CASE UPPER ASSUMED
FILE IN FIELD 1 DISABLED--ACCEPTED
WARNING:  NEW ELEMENT WILL REPLACE EXISTING ELEMENT
ED 15R2-FRI-05/26/78-16:18:41-(,0)
INPUT
EDIT
LINES:2 FIELDATA

NO SERIES FOUND IN THE ENTIRE DATA BASE

FURPUR 27R3 E33 SL73R1 05/26/78 16:18:57
>
```

Example 2: Input Error in Fraction Identifier

```
>@add fpeis.chemsearch#
CTS    6R1    16:16:28
THE ASSUMED MODE IS FIELDATA
FILE NAME = 1631
ENTER CHEMICAL ENTRY CODE (S,C,M,OR F) >f#
ENTER LEVEL I FRACTION CHEMICAL ID >frac 1#
ENTER TEST SERIES NUMBERS TO BE SCANNED
AS FIRST,LAST. IF ENTIRE DATA BASE
IS TO BE SCANNED, JUST PRESS RETURN >#
IN EXEC MODE
CASE UPPER ASSUMED
FILE IN FIELD 1 DISABLED--ACCEPTED
WARNING:  NEW ELEMENT WILL REPLACE EXISTING ELEMENT
ED 15R2-FRI-05/26/78-16:17:07-(,0)
INPUT
EDIT
LINES:2 FIELDATA

NO SERIES FOUND IN THE ENTIRE DATA BASE

FURPUR 27R3 E33 SL73R1 05/26/78 16:17:23
>
```

Example 3: Partial Data Base Scan (No Errors)

```
>@add fpeis.chemsearch#
CTS    6R1    16:19:10
THE ASSUMED MODE IS FIELDATA
FILE NAME = 1912
ENTER CHEMICAL ENTRY CODE (S,C,M,OR F) >f#
ENTER LEVEL I FRACTION CHEMICAL ID >frac-3#
ENTER TEST SERIES NUMBERS TO BE SCANNED
AS FIRST,LAST. IF ENTIRE DATA BASE
IS TO BE SCANNED, JUST PRESS RETURN >105,110#
IN EXEC MODE
CASE UPPER ASSUMED
FILE IN FIELD 1 DISABLED--ACCEPTED
WARNING:  NEW ELEMENT WILL REPLACE EXISTING ELEMENT
ED 15R2-FRI-05/26/78-16:19:57-(,0)
INPUT
EDIT
LINES:2 FIELDATA

THE FOLLOWING SERIES WERE FOUND BETWEEN SERIES 00105 AND 00110
00108

FURPUR 27R3 E33 SL73R1 05/26/78  16:20:16
>
```

Example 4: Full Data Base Scan (No Errors)

```
>@add fpeis.chemsearch#
CTS    6R1    16:15:19
THE ASSUMED MODE IS FIELDATA
FILE NAME = 1521
ENTER CHEMICAL ENTRY CODE (S,C,M,OR F) >f#
ENTER LEVEL I FRACTION CHEMICAL ID >frac-1#
ENTER TEST SERIES NUMBERS TO BE SCANNED
AS FIRST,LAST. IF ENTIRE DATA BASE
IS TO BE SCANNED, JUST PRESS RETURN >#
IN EXEC MODE
CASE UPPER ASSUMED
FILE IN FIELD 1 DISABLED--ACCEPTED
WARNING:  NEW ELEMENT WILL REPLACE EXISTING ELEMENT
ED 15R2-FRI-05/26/78-16:15:51-(,0)
INPUT
EDIT
LINES:2 FIELDATA

THE FOLLOWING SERIES WERE FOUND IN THE ENTIRE DATA BASE.
00001
00108

FURPUR 27R3 E33 SL73R1 05/26/78 16:16:14
>
```

5.6.1.5 Use of User-Initiated Abort

Users may abort the CHEMSEARCH SRC by entering "KILL" FOR ANY ENTRY. This is shown in the following example.

```
>@add fpeis.chemsearch#
CTS    6R1    10:52:27
THE ASSUMED MODE IS FIELDATA
FILE NAME = 5233
ENTER CHEMICAL ENTRY CODE (S,C,M,OR F) >kill#
JOB KILLED
IN EXEC MODE
>
```

```
>@add fpeis.chemsearch#
CTS    6R1    10:52:58
THE ASSUMED MODE IS FIELDATA
FILE NAME = 5300
ENTER CHEMICAL ENTRY CODE (S,C,M,OR F) >s#
ENTER SAROAD NUMBER >kill#
JOB KILLED
IN EXEC MODE
>
```

```
>@add fpeis.chemsearch
CTS    6R1    10:53:22
THE ASSUMED MODE IS FIELDATA
FILE NAME = 5323
ENTER CHEMICAL ENTRY CODE (S,C,M,OR F) >s#
ENTER SAROAD NUMBER >2103#
ENTER TEST SERIES NUMBERS TO BE SCANNED
AS FIRST,LAST. IF ENTIRE DATA BASE
IS TO BE SCANNED, JUST PRESS RETURN >kill#
JOB KILLED
IN EXEC MODE
>
```

5.6.2 Batch Processing Procedure

SRC-6 is not available to batch users since it utilizers the UNIVAC 1100 Conversational Time-Sharing (CTS) processor.

SECTION 6

APPENDIX

CONTENTS

Number	Item	Page
6.1	Standard FPEIS Data Input Forms	UG-6.1-1
6.2	Example of FPEIS SERIES Report Output	UG-6.2-1
6.3	FPEIS Data Base Structure	UG-6.3-1
6.3.1	SYSTEM 2000 Data Base Structure	UG-6.3-2
6.4	Key/Nonkey Data Elements	UG-6.4-1
6.4.1	Key Data Elements	UG-6.4-2
6.4.2	Nonkey Data Elements	UG-6.4-4
6.5	Summary of Contents of the FPEIS Data Base	UG-6.5-1

6.1 Standard FPEIS Data Input Forms

Standard data input forms for the FPEIS may be found following this discussion. There are six forms in all. These forms may be reproduced for use in encoding emissions testing data. Specific encoding instructions are given in Section 2.

FPEIS

U.S. ENVIRONMENTAL PROTECTION AGENCY
IERL-RTP, Research Triangle Park, N.C. 27711

FINE PARTICLE EMISSIONS INFORMATION SYSTEM
DATA INPUT FORMS

Form 1 9/77

Form Completed by

A - SOURCE DESCRIPTION

Test Series No.	Card No.	SCC I (Source Category)	SCC II (Type of Operation)	SCC III (Feed Material Class)	Test Series Start Date Mo	Start Date Da	Start Date Yr	Finish Date Mo	Finish Date Da	Finish Date Yr	UTM Zone
	A 0 1										

Card No.	SCC IV (Operating Mode Class)	Site Name
A 0 2		

Card No.	Source Name	Street	City	State
A 0 3				

Card No.	Zip	UTM Coords X	UTM Coords Y	Tested By
A 0 4				

Card No.	Reference
A 0 5	

B - TEST SERIES REMARKS

Test Series No.	Card No.	Remarks in Text
	B 0 1	
	B 0 2	
	B 0 3	
	B 0 4	
	B 0 5	
	B 0 6	
	B 0 7	
	B 0 8	
	B 0 9	
	B 1 0	

EPA(RTP)412
(Page 1 of 6)

FPEIS

U.S. ENVIRONMENTAL PROTECTION AGENCY
IERL-RTP, Research Triangle Park, N.C. 27711

FINE PARTICLE EMISSIONS INFORMATION SYSTEM
DATA INPUT FORMS

Form 2 9/77

Form Completed by

C - CONTROL DEVICE(S) CHARACTERISTICS

Test Series No.	Card No.	Device No. (1,2 or 3)	Device Category	Device Class	Generic Type
	C 0 1				

Card No.	Commercial Name	Manufacturer
C 0 2		

Card No.	Device Description
C 0 3	

Card No.	Device Description (continued)
C 0 4	

CONTROL DEVICE(S) DESIGN PARAMETERS

Test Series No.	Card No.	Serial No.	Device No. (1,2 or 3)	Specifications	Value
	C 0 5				
	C 0 5				
	C 0 5				
	C 0 5				
	C 0 5				
	C 0 5				
	C 0 5				
	C 0 5				
	C 0 5				
	C 0 5				
	C 0 5				
	C 0 5				
	C 0 5				
	C 0 5				
	C 0 5				
	C 0 5				
	C 0 5				
	C 0 5				
	C 0 5				
	C 0 5				

EPA(F,TP)412
(Page 2 of 6)

FPEIS

U.S. ENVIRONMENTAL PROTECTION AGENCY
IERL-RTP, Research Triangle Park, N.C. 27711

FINE PARTICLE EMISSIONS INFORMATION SYSTEM
DATA INPUT FORMS

Form 3 9/77

Form Completed by

D – TEST CHARACTERISTICS

Test Series No. (1–5)	Sub-series No. (6–10)	Card No. (11–13)	Control Device Inlet or Outlet (I or Ø) (14)	Test Subseries (15)	Date Mo (16–17)	Date Da (18–19)	Date Yr (20–21)	Start Time (22–25)	Stop Time (26–29)	Source Operating Mode (30–45)	Source Operating Rate* (46–60)	% Design Capacity* (61–80)
		D 0 1										

Card No. (11–13)	Feed Material* (16–45)	Feed Material Composition* (46–80)
D 0 2		

Card No. (11–13)	Sampling Location Description* (16–45)	Volume Flow Rate* (46–55)	Velocity* (56–60)	Temp.* (61–65)	Press.* (66–70)	% H_2O* (71–75)	% Iso-kinetic* (76–80)
D 0 3							

Card No. (11–13)	CO_2* (16–20)	CO* (21–25)	O_2* (26–30)	N_2* (31–35)	Trace Gases in ppm (Text)* (36–80)
D 0 4					

CONTROL DEVICE(S) OPERATING PARAMETERS

Test Series No. (1–5)	Sub-series No. (6–10)	Card No. (11–13)	Device No. (1, 2 or 3) (14)	Serial No. (15)	Specification* (16–47)	Value* (48–80)
		D 0 5				
		D 0 5				
		D 0 5				
		D 0 5				
		D 0 5				
		D 0 5				
		D 0 5				
		D 0 5				
		D 0 5				
		D 0 5				
		D 0 5				
		D 0 5				
		D 0 5				
		D 0 5				
		D 0 5				
		D 0 5				
		D 0 5				
		D 0 5				
		D 0 5				
		D 0 5				

*Need not be filled if the preceding subseries contains the same data; changes or modifications should be entered as necessary. If data or information from preceding subseries is not applicable, use NA or 999; for subseries following use of NA or 999 where data or information is available it must be entered.

EPA(RTP)412
(Page 3 of 6)

FPEIS

U.S. ENVIRONMENTAL PROTECTION AGENCY
IERL-RTP, Research Triangle Park, N.C. 27711

FINE PARTICLE EMISSIONS INFORMATION SYSTEM
DATA INPUT FORMS

Form 4 9/77
Form Completed by

CONTROL DEVICE(S) OPERATING PARAMETERS (cont'd)

Test Series No.	Sub-series No.	Card No.	Serial No.	Device No. (1, 2 or 3)	Specification *	Value *
		D05				
		D05				
		D05				
		D05				
		D05				
		D05				
		D05				
		D05				
		D05				
		D05				

SUBSERIES REMARKS

Test Series No.	Sub-series No.	Card No.	Remarks in Text *
		D06	
		D07	
		D08	
		D09	
		D10	
		D11	
		D12	
		D13	
		D14	
		D15	
		D16	
		D17	
		D18	
		D19	
		D20	

E - PARTICULATE MASS TRAIN RESULTS

Test Series No.	Sub-series No.	Card No.	Front Half	Total	Mass Train Comments (Text)
		E01	• E +	• E +	

F - PARTICULATE PHYSICAL PROPERTIES

Test Series No.	Sub-series No.	Card No.	Density *	Determination: Resistivity *	Other Physical Properties in Text
		F01	•	• +	

*Need not be filled if the preceding subseries contains the same data; changes or modifications should be entered as necessary. If data or information from preceding subseries is not applicable, use NA or 999; for subseries following use of NA or 999 where data or information is available it must be entered.

EPA(RTP)412
(Page 4 of 8)

FPEIS

U.S. ENVIRONMENTAL PROTECTION AGENCY
IERL-RTP, Research Triangle Park, N.C. 27711

FINE PARTICLE EMISSIONS INFORMATION SYSTEM
DATA INPUT FORMS

Form 5b 2/78

Form Completed by

H - CHEMICAL COMPOSITION

Stokes/Aerodynamic/Impaction Diameter (0, 1, or 2)
Calib or Calc (1 or 0)

Test Series No.	Sub-series No.	Card No.	Upper Boundary Diameter	Particle Boundary Diameter * ①	②	③	④	⑤	⑥	⑦	⑧
		H 0 1	•	•	•	•	•	•	•	•	•

Entry Code
Analysis I.D.

Card No.	Chemical I.D.	Mass Train Filter or Pooled Stages	Chemical Concentration ($\mu g/m^3$) ① ±	② ±	③ ±	④ ±	⑤ ±	⑥ ±	⑦ ±	⑧ ±
H 0 2		•	•	•	•	•	•	•	•	•
H 0 2		•	•	•	•	•	•	•	•	•
H 0 2		•	•	•	•	•	•	•	•	•

FPEIS

U.S. ENVIRONMENTAL PROTECTION AGENCY
IERL-RTP, Research Triangle Park, N.C. 27711

FINE PARTICLE EMISSIONS INFORMATION SYSTEM
DATA INPUT FORMS

Form 6 9 77

Form Completed by

I - MEASUREMENT PARTICULARS

Test Series No.	Sub-series No.	Run No.	Card No.	Measurement Instrument/Method No. / Measurement Instrument/Method Name**	Meas. Start Time	Sampling Period **	Aerosol Flow Rate**	Gas Conditions at Measurement Location** Temp.	Press.	% H_2O	Dilution Factor**
			I 0 1								

Card No.	Measurement Size Range** Lower	Upper	Collection Surface/Substrate and its Specifications **
I 0 2			

Card No.	Comments on the Measurement **
I 0 3	
I 0 4	
I 0 5	

J - PARTICULATE SIZE DISTRIBUTION DATA

Test Series No. | Sub-series No. | Run No. | Card No. | Measurement Instrument/Method No. | Stokes/Aerodynamic/Impaction Diameter (0, 1, or 2) | Particle Size Data** | Calib or Calc (1 or 0)

Card No.	Particle Size Data**
J 0 1	
J 0 2	
J 0 3	

Test Series No. | Sub-series No. | Run No. | Card No. | Measurement Instrument/Method No. | Mass/No. (1 or 0) | Mass/No. Data

Card No.	Mass/No. Data
J 0 4	
J 0 5	
J 0 6	

**Need not be filled if the preceding subseries or run with this instrument/method contains the same data; changes or modifications should be entered as necessary. If data or information from preceding subseries or run is not applicable, use NA or 999; for subseries or run following use of NA or 999 where data or information is available it must be entered.

EPA(RTP)412
(Page 6 of 6)

6.2 Example of FPEIS SERIES Report Output

This section includes a typical FPEIS Series Report. The use of SRC-1 (see Section 5.1) would result in the printing of one such report, while the use of SRC-2 (see Section 5.2) would result in the printing of many such reports.

FINE PARTICLE EMISSIONS INFORMATION SYSTEM
FPEIS SERIES REPORT

TEST SERIES NO: 46 TEST SERIES AT SITE FROM 09211973 TO 10051973 BY YOST, K.J. ET AL, PURDUE UNIVERSITY

REFERENCE: PROGRESS REPORT NSF(RANN) GRANT GI-35106

SOURCE CHARACTERISTICS----------

NEDS SCC SOURCE CATEGORY: SOLID WASTE
TYPE OF OPERATION: GOVERNMENT
FEED MATERIAL CLASS:
OPERATING MODE CLASS:

SITE NAME NICOSIA MUNICIPAL INCINERATOR
SOURCE NAME FURNACE NO. 1
ADDRESS GARY AVENUE
EAST CHICAGO , IN
UTM ZONE 16 UTM X-COORD . UTM Y-COORD .

TEST SERIES REMARKS----------

CONTROL DEVICE(S) CHARACTERISTICS----------

UNIT 1

DEVICE GENERIC TYPE: SETTLING CHAMBER
CATEGORY:
CLASS: CONVENTIONAL
DESCRIPTION:

COMMERCIAL NAME:
MANUFACTURER:

CONTROL DEVICE DESIGN SPECIFICATIONS

TEST SERIES NO: 46 TEST SERIES AT SITE FROM 09211973 TO 10051973 BY YOST, K.J. ET AL, PURDUE UNIVERSITY

UNIT 2

DEVICE GENERIC TYPE: SPRAY CHAMBER
CATEGORY:
CLASS:
DESCRIPTION:

COMMERCIAL NAME:
MANUFACTURER:

CONTROL DEVICE DESIGN SPECIFICATIONS

TEST SERIES NO: 46 TEST SERIES AT SITE FROM 09211973 TO 10051973 BY YOST, K.J. ET AL, PURDUE UNIVERSITY

UNIT 3

DEVICE GENERIC TYPE: WET SCRUBBER
CATEGORY: PLATE
CLASS: CONVENTIONAL
DESCRIPTION:

COMMERCIAL NAME:
MANUFACTURER:

CONTROL DEVICE DESIGN SPECIFICATIONS

TEST SERIES NO: 46 SUB-SERIES NO: 1 TEST LOCATION: 0 SUB-SERIES TEST DATE: 09211973 FROM TO HOURS

TEST CHARACTERISTICS----------

SOURCE OPERATING MODE: SOURCE OPERATING RATE: PCT DESIGN CAP:
FEED MATERIAL: FEED MATERIAL COMPOSITION:

SAMPLING LOCATION DESCRIPTION: 8 STACK DIA FROM THE ID FAN INLET PERCENT ISOKINETIC SAMPLING= 100

PROCESS CONDITIONS AT SAMPLING LOCATION

VOL. FLOW RATE= 28.2 DNM3/S VELOCITY= 16.8 M/S TEMPERATURE= 71 C PRESSURE= MM HG

GAS COMPOSITION

WATER VAPOR (PERCENT BY VOLUME)= .

ORSAT ANALYSIS-- CO2 = .% CO = .% O2 = .% N2 = .%

TRACE GASES (PPM):

SUB-SERIES REMARKS----------

PARTICULATE MASS TRAIN RESULTS----------

FRONT HALF= 4.117E+05 TOTAL= .E+ MASS TRAIN REMARKS:

PARTICULATE PHYSICAL PROPERTIES----------

DENSITY= 1.000 G/CM3 (ASSUMED) RESISTIVITY= E+ OHM-CM ( )

OTHER PHYSICAL PROPERTIES:

TEST SERIES NO: 46 SUB-SERIES NO: 1 TEST LOCATION: 0

CHEMICAL ANALYSIS----------

PARTICLE DIAMETERS IN MICROMETERS

STAGE NUMBER:	0	1	2	3	4	5	6	7	8
PARTICLE DIAMETER BOUNDARY:	20.000	16.480	10.220	6.800	4.660	3.010	1.550	.960	.660

DIAMETER BASIS = CLASSIC AERODYNAMIC DEFINITION CALCULATED BOUNDARY DIAMETERS

CHEMICAL DATA ARE LISTED IN THE FOLLOWING ORDER:

SAROAD NUMBER MEG NUMBER CHEM ABSTRACTS REG. NO. CONCENTRATION (UG/M3) BY STAGE

PREFERRED NAME

OTHER NAMES COMMONLY USED

EMPIRICAL FORMULA MOLECULAR WEIGHT

ANALYSIS METHOD

CHEMICAL DATA			FILTER /TOTAL	STAGE 1	STAGE 2	STAGE 3	STAGE 4	STAGE 5	STAGE 6	STAGE 7	STAGE 8
2110	82A000	07440-43-9		6.34+0	2.11-1	2.11-1	7.61+0	1.23+1	6.34+0	1.23+1	4.67+1
CADMIUM											
CD		112.42									
ATOMIC ABSORPTION											
2128	46A000	07439-92-1		2.11+0	2.11+0	2.11+0	2.11+0	9.51+1	2.24+2	5.14+2	1.29+3
LEAD											
PLUMBUM											
PB		207.22									
ATOMIC ABSORPTION											
2167	81A000	07440-66-6		2.28+2	1.23+2	9.51+1	7.19+1	1.29+2	1.61+2	4.93+2	1.35+3
ZINC											
ZN		65.38									
ATOMIC ABSORPTION											
2114	78A000	07440-50-8		2.11-1	2.11-1	2.11-1	2.11-1	2.11-1	1.33+1	1.86+1	2.68+1
COPPER											
CUPRUM											
CU		63.55									
ATOMIC ABSORPTION											

TEST SERIES NO: 46 SUB-SERIES NO: 1 TEST LOCATION: O RUN NUMBER: 01

MEASUREMENT PARTICULARS----------

MEASUREMENT INSTRUMENT/METHOD NO: 1 NAME: ANDERSEN IMPACTOR SIZE RANGE- .030 TO 20.000 MICROMETERS

COLLECTION SURFACE/SUBSTRATE:

MEASUREMENT START TIME: SAMPLING PERIOD: 0004.3 MIN SAMPLING RATE: 0011.06 L/MIN DILUTION FACTOR: 0001.0

GAS SAMPLING CONDITIONS- TEMPERATURE: C PRESSURE: MM HG PCT. WATER VAPOR: .

COMMENTS ON THE MEASUREMENT

CONCENTRATION BASIS = MASS

DIAMETER BASIS = CLASSIC AERODYNAMIC DEFINITION CALCULATED BOUNDARY DIAMETERS

PARTICLE SIZE DISTRIBUTION DATA----------

STOKES-DIA (UM)		CLASSIC AERODYNAMIC DIA (UM)		AERODYNAMIC IMPACTION DIA (UM)		DM (UG/DNM3)	DM/DLDAE (UG/DNM3)	DN (NO/CM3)	DN/DLDAE (NO./CM3)	CUM M % LESS SIZE
BNDRY	MID PT	BNDRY	MID PT	BNDRY	MID PT					
20.000		20.000		20.081						
16.480	18.155	16.480	18.155	16.561	18.236	2.114+04	2.514+05	6.747+00	8.025+01	81.819
10.220	12.978	10.220	12.978	10.301	13.061	1.057+04	5.094+04	9.236+00	4.451+01	72.728
6.800	8.336	6.800	8.336	6.881	8.419	1.057+04	5.974+04	3.484+01	1.969+02	63.638
4.660	5.629	4.660	5.629	4.740	5.711	8.457+03	5.153+04	9.055+01	5.517+02	56.364
3.010	3.745	3.010	3.745	3.090	3.827	1.480+04	7.797+04	5.381+02	2.835+03	43.636
1.550	2.160	1.550	2.160	1.629	2.244	8.457+03	2.934+04	1.603+03	5.561+03	36.362
.960	1.220	.960	1.220	1.038	1.300	1.057+04	5.080+04	1.112+04	5.345+04	27.272
.660	.796	.660	.796	.737	.874	3.171+04	1.949+05	1.201+05	7.379+05	.000
.030	.141	.030	.141	.076	.236	0.000	0.000	0.000	0.000	.000

TOTAL MASS 1.163+05 TOTAL NUMBER 1.335+05

6.3 FPEIS Data Base Structure

Direct access to the FPEIS requires that the user have a working knowledge of the SYSTEM 2000 Data Base Management System. The key to the sorting and retrieval of data is the data base definition. This is a list of all of the data elements which are identified by unique component numbers and which are arranged in a hierarchical structure. Section 6.3.1, which follows, gives the SYSTEM 2000 data base definition for the FPEIS.

6.3.1 SYSTEM 2000 Data Base Structure

10* FPEIS (name X (5))

50* Category (RG)

- 100* Source category (name X (17) in 50)
- 110* Source characteristics (RG in 50)
  - 120* Type of operation (name X (17) in 110)
  - 130* Feed material class (name X (17) in 110)
  - 140* Operating mode class (name X (20) in 110)
  - 150* Source name (name X (25) in 110)
  - 160* Site name (name X (40) in 110)
  - 170* Zone location (integer number 99 in 110)
  - 180* UTM-X (decimal number 999.9 in 110)
  - 190* UTM-Y (decimal number 9999.9 in 110)
  - 200* Address (nonkey name X (20) in 110)
  - 210* City (name X (18) in 110)
  - 220* State (name XX in 110)
  - 230* Zip code (nonkey integer number 9(5) in 110)
  - 300* Test series (RG in 110)
    - 310* Test series number (integer number 9(5) in 300)
    - 320* Test series reference (name X (60) in 300)
    - 330* Name of testing group (name X (50) in 300)
    - 340* Series start date (nonkey date in 300)
    - 350* Series finish date (nonkey date in 300)
    - 355* Date FPEIS entry (date in 300)
    - 360* Test series remark 1 (nonkey text X (65) in 300)
    - 361* Test series remark 2 (nonkey text X (65) in 300)
    - 362* Test series remark 3 (nonkey text X (65) in 300)
    - 363* Test series remark 4 (nonkey text X (65) in 300)
    - 364* Test series remark 5 (nonkey text X (65) in 300)
    - 365* Test series remark 6 (nonkey text X (65) in 300)
    - 366* Test series remark 7 (nonkey text X (65) in 300)

367* Test series remark 8 (nonkey text X (65) in 300)

368* Test series remark 9 (nonkey text X (65) in 300)

369* Test series remark 10 (nonkey text X (65) in 300)

400* Control devices (RG in 300)

410* Generic device type (name X (20) in 400 with many future additions)

420* Device class (name X (12) in 400 with many future additions)

430* Device category (nonkey text X (33) in 400)

440* Device commercial name (name X (30) in 400)

450* Manufacturer (name X (30) in 400)

460* Device description 1 (nonkey text X (60) in 400)

461* Device description 2 (nonkey text X (60) in 400)

500* Design specification (RG in 400)

510* Device number (integer number 9 in 500 with many future additions)

520* Specification number 2 (integer number 99 in 500)

530* Specification type (nonkey name X (30) in 500)

540* Specification value (nonkey name X (20) in 500)

600* Test characteristics (RG in 300)

610* Subseries number (integer number 999 in 600)

620* Subseries test date (nonkey date in 600)

630* Subseries start time (nonkey integer number 9(4) in 600)

640* Subseries stop time (nonkey integer number 9(4) in 600)

650* Sampling location (name X in 600 with many future additions)

660* Sampling location description (name X (40) in 600)

670* Source operating mode (nonkey text X (30) in 600)

680* Source operating rate (nonkey text X (17) in 600)

690* Percent design capacity (nonkey decimal number 999.9 in 600)

700* Source feed material (nonkey text X (30) in 600)

710* Feed material composition (nonkey text X (35) in 600)

720* Volumetric flow rate (nonkey decimal number 9(5).9 in 600)

730* Gas velocity sampling location (nonkey decimal number 999.9 in 600)

740* Gas temperature sampling location (nonkey integer number 9999 in 600)

750* Pressure sampling location (nonkey integer number 9(5) in 600)

760* Moisture content (nonkey decimal number 99.9 in 600)

770* Percent isokinetic sampling (nonkey integer number 999 in 600)

780* CO-2 (decimal number 99.99 in 600)

781* CO (decimal number 99.99 in 600 with many future additions)

782* O-2 (decimal number 99.99 in 600)

783* N-2 (decimal number 99.99 in 600 with some future additions)

790* Trace gases in PPM (nonkey text X (49) in 600)

800* Mass train - total mass concentration mantissa (nonkey decimal number 99.999 in 600)

810* Mass train - total mass concentration exponent (nonkey integer number 99 in 600)

820* Mass train - front half mass concentration mantissa (nonkey decimal number 99.999 in 600)

830* Mass train - front half mass concentration exponent (nonkey integer number 99 in 600)

840* Mass train comments (nonkey text X (45) in 600)

850* Density (decimal number 99.99 in 600)

860* Density determination (nonkey text X in 600)

870* Resistivity-mantissa (nonkey decimal number 9.99 in 600)

880* Resistivity-exponent (nonkey integer number 99 in 600)

890* Resistivity determination (nonkey text X in 600)

900* Physical properties comments (nonkey text X (50) in 600)

910* Subseries remark-1 (nonkey text X (65) in 600)

911* Subseries remark-2 (nonkey text X (65) in 600)

912* Subseries remark-3 (nonkey text X (65) in 600)

913* Subseries remark-4 (nonkey text X (65) in 600)

914* Subseries remark-5 (nonkey text X (65) in 600)

915* Subseries remark-6 (nonkey text X (65) in 600)

916* Subseries remark-7 (nonkey text X (65) in 600)

917* Subseries remark-8 (nonkey text X (65) in 600)

918* Subseries remark-9 (nonkey text X (65) in 600)

919* Subseries remark-10 (nonkey text X (65) in 600)

920* Subseries remark-11 (nonkey text X (65) in 600)

921* Subseries remark-12 (nonkey text X (65) in 600)

922* Subseries remark-13 (nonkey text X (65) in 600)

923* Subseries remark-14 (nonkey text X (65) in 600)

924* Subseries remark-15 (nonkey text X (65) in 600)

1000* Control device operating parameters (RG in 600)

1010* Control device number (integer number 9 in 1000 with many future additions)

1020* Parameter number 2 (integer number 99 in 1000 with many future additions)

1030* Parameter type (nonkey name X (50) in 1000)

1040* Parameter value (nonkey name X (20) in 1000)

1100* Bioassay analysis (RG in 600)

- 1110* Bioassay test type (name X (20) in 1100)
- 1120* Bioassay test remarks (nonkey name X (45) in 1100)
- 1200* Chemical calibration/calculation (integer number 9 in 600)
- 1205* Diameter basis (integer number 9 in 600)
- 1210* Upper boundary limit (nonkey decimal number 99.999 in 600)
- 1220* Stage-1 limit (nonkey decimal number 99.999 in 600)
- 1230* Stage-2 limit (nonkey decimal number 99.999 in 600)
- 1240* Stage-3 limit (nonkey decimal number 99.999 in 600)
- 1250* Stage-4 limit (nonkey decimal number 99.999 in 600)
- 1260* Stage-5 limit (nonkey decimal number 99.999 in 600)
- 1270* Stage-6 limit (nonkey decimal number 99.999 in 600)
- 1280* Stage-7 limit (nonkey decimal number 99.999 in 600)
- 1290* Stage-8 limit (nonkey decimal number 99.999 in 600)

1400* Chemical analysis (RG in 600)

- 1405* Chemical entry code (name X in 1400)
- 1410* Chemical ID (name X (10) in 1400)
- 1420* Analysis method (name XX in 1400)
- 1430* Filter/total (nonkey text X (6) in 1400)
- 1432* Stage-1 (nonkey text X (6) in 1400)
- 1434* Stage-2 (nonkey text X (6) in 1400)
- 1436* Stage-3 (nonkey text X (6) in 1400)
- 1438* Stage-4 (nonkey text X (6) in 1400)
- 1440* Stage-5 (nonkey text X (6) in 1400)
- 1442* Stage-6 (nonkey text X (6) in 1400)
- 1444* Stage-7 (nonkey text X (6) in 1400)
- 1446* Stage-8 (nonkey text X (6) in 1400)

1500* Run group (RG in 600)

1505* Run number (integer number 99 in 1500 with many future additions)

1510* Measurement instrument/method number (integer number 9 in 1500 with many future additions)

1520* Measurement instrument/method name (name X (30) in 1500 with many future additions)

1530* Measurement start time (nonkey integer number 9999 in 1500)

1540* Sampling period duration (nonkey decimal number 9999.9 in 1500)

1550* Sampling flow rate (nonkey decimal number 9999.99 in 1500)

1560* Sampling train temperature (nonkey integer number 9(4) in 1500)

1570* Sampling train pressure (nonkey integer number 9(5) in 1500)

1580* Percent moisture (nonkey decimal number 99.9 in 1500)

1590* Dilution factor (nonkey decimal number 9(4).9 in 1500)

1600* Measurement size range - lower limit (decimal number 99.999 in 1500 with many future additions)

1610* Measurement size range - upper limit (decimal number 99.999 in 1500 with many future additions)

1620* Collection surface/substrate (nonkey text X (55) in 1500)

1630* Run remark-1 (nonkey text X (65) in 1500)

1631* Run remark-2 (nonkey text X (65) in 1500)

1632* Run remark-3 (nonkey text X (65) in 1500)

1640* Particle diameter basis (integer number 9 in 1500 with many future additions)

1645* Concentration basis (integer number 9 in 1500)

1650* Upper diameter boundary (decimal number 9(3).9(3) in 1500)

1700* Particle size distribution data (RG in 1500)

1710* Diameter boundary (decimal number 9(2).9(3) in 1700 with some future additions)

1715* Calibration/calculation (nonkey integer number 9 in 1700)

1720* Concentration value - mantissa (nonkey decimal number 9.999 in 1700)

1730* Concentration value - exponent (nonkey integer number 99 in 1700)

1800* SAROAD table (RG)

1810* SAROAD number (integer number 9(4) in 1800)

1820* MEG number (name X (6) in 1800)

1830* CAS number (name X (10) in 1800)

1840* Preferred name (nonkey name X (50) in 1800)

1850* Synonyms (RG in 1800)

1851* Other names (nonkey name X (50) in 1850)

1860* Empirical formula (nonkey name X (20) in 1800)

1870* Molecular weight (decimal number 9(4).9(2) in 1800)

1900* Chemical analysis type table (RG)

1910* Chemical analysis code (name X in 1900)

1920* Chemical analysis method (name X (75) in 1900)

6.4 Key/Nonkey Data Elements

Data elements in a SYSTEM 2000 data base may be either KEY or NONKEY. This designation determines whether a particular data element may be accessed directly or must be qualified by including additional information. KEY elements may be selected directly; NONKEY elements require qualification by a KEY element. For example, the data element GENERIC DEVICE TYPE is KEY and may be used to directly access the data of interest, such as in the following:

PRINT TEST SERIES NUMBER WHERE GENERIC DEVICE TYPE EQ ESP:

If, however, the data element is NONKEY as in the case of SERIES START DATE, then qualification will be required:

IF SERIES START DATE GT 1/1/76 THEN PRINT TEST SERIES NUMBER WHERE NAME OF TESTING GROUP EQ XYZ LABORATORY:

In this case, the KEY element, NAME OF TESTING GROUP, is used to qualify the request regarding a NONKEY element.

Sections 6.4.1 and 6.4.2 which follow list the KEY and NONKEY data elements, respectively, along with their SYSTEM 2000 component numbers.

6.4.1 KEY Data Elements

Component Number	Data Element
100	Source Category
120	Type of Operation
130	Feed Material Class
140	Operating Mode Class
150	Source Name
160	Site Name
170	Zone Location
180	UTM-X
190	UTM-Y
210	City
220	State
310	Test Series Number
320	Test Series Reference
330	Name of Testing Group
355	Date FPEIS Entry
410	Generic Device Type
420	Device Class
440	Device Commercial Name
450	Manufacturer
510	Device Number
520	Specification Number 2
610	Subseries Number
650	Sampling Location
660	Sampling Location Description
780	CO-2
781	CO
782	O-2
783	N-2
850	Density
1010	Control Device Number
1020	Parameter Number 2
1110	Bioassay Test Type

Component Number	Data Element
1200	Chemical Calibration/Calculation
1205	Diameter Basis
1405	Chemical Entry Code
1410	Chemical ID
1420	Analysis Method
1505	Run Number
1510	Measurement Instrument/Method Number
1520	Measurement Instrument/Method Name
1600	Measurement Size Range - Lower Limit
1610	Measurement Size Range - Upper Limit
1640	Particle Diameter Basis
1645	Concentration Basis
1650	Upper Diameter Boundary
1710	Diameter Boundary
1810	SAROAD Number
1820	MEG Number
1830	CAS Number
1870	Molecular Weight
1910	Chemical Analysis Code
1920	Chemical Analysis Method

6.4.2 NONKEY Data Elements

Component Number	Data Element
200	Address
230	Zip Code
340	Series Start Date
350	Series Finish Date
360-369	Test Series Remark 1-10
430	Device Category
460-461	Device Description 1 and 2
530	Specification Type
540	Specification Value
620	Subseries Test Date
630	Subseries Start Time
640	Subseries Finish Time
670	Source Operating Mode
680	Source Operating Rate
690	Percent Design Capacity
700	Source Feed Material
710	Feed Material Composition
720	Volumetric Flow Rate
730	Gas Velocity Sampling Location
740	Gas Temperature Sampling Location
750	Pressure Sampling Location
760	Moisture Content
770	Percent Isokinetic Sampling
790	Trace Gases in PPM
800	Mass Train - Total Mass Concentration Mantissa
810	Mass Train - Total Mass Concentration Exponent
820	Mass Train - Front Half Mass Concentration Mantissa
830	Mass Train - Front Half Mass Concentration Exponent

Component Number	Data Element
840	Mass Train Comments
860	Density Determination
870	Resistivity - Mantissa
880	Resistivity - Exponent
890	Resistivity Determination
900	Physical Properties Comments
910-924	Subseries Remark 1-15
1030	Parameter Type
1040	Parameter Value
1120	Bioassay Test Remarks
1210	Upper Boundary Limit
1220	Stage - 1 Limit
1230	Stage - 2 Limit
1240	Stage - 3 Limit
1250	Stage - 4 Limit
1260	Stage - 5 Limit
1270	Stage - 6 Limit
1280	Stage - 7 Limit
1290	Stage - 8 Limit
1430	Filter/Total
1432	Stage - 1
1434	Stage - 2
1436	Stage - 3
1438	Stage - 4
1440	Stage - 5
1442	Stage - 6
1444	Stage - 7
1446	Stage - 8

Component Number	Data Element
1530	Measurement Start Time
1540	Sampling Period Duration
1550	Sampling Flow Rate
1560	Sampling Train Temperature
1570	Sampling Train Pressure
1580	Percent Moisture
1590	Dilution Factor
1620	Collection Surface/Substrate
1630-1632	Run Remark 1, 2, and 3
1715	Calibration/Calculation
1720	Concentration Value - Mantissa
1730	Concentration Value - Exponent
1840	Preferred Name
1851	Other Names
1860	Empirical Formula

6.5 Summary of Contents of the FPEIS Data Base

This section provides a summary of the contents of the FPEIS data base. As new testing results are added to the FPEIS, this master listing will be updated.

Test Series No.	Report's Author and Name	Testing Equipment	Source	Control Equipment	No. of Runs
1	Harris, D. B., and D. C. Drehmel, "Fractional Efficiency of Metal Fume Control as Determined by Brink Impactor," EPA/CSL (1973)	Brink Impactor	Zn Roaster	Wet ESP	4
2	Harris, D. B., and D. C. Drehmel, "Fractional Efficiency of Metal Fume Control as Determined by Brink Impactor," EPA/CSL (1973)	Brink Impactor	Cu Converter	Wet ESP	4
3	Harris, D. B., and D. C. Drehmel, "Fractional Efficiency of Metal Fume Control as Determined by Brink Impactor," EPA/CSL (1973)	Brink Impactor	Zn Sintering	Dry ESP	2
4	Harris, D. B., and D. C. Drehmel, "Fractional Efficiency of Metal Fume Control as Determined by Brink Impactor," EPA/CSL (1973)	Brink Impactor	Pb Sintering	Baghouse (Orlon)	2
5	Harris, D. B., and D. C. Drehmel, "Fractional Efficiency of Metal Fume Control as Determined by Brink Impactor," EPA/CSL (1973)	Brink Impactor	Pb Blast Furnace	Baghouse (wool felt)	2
6	Statnick, R. M., "Measurement of SO_2, Particulate, and Trace Elements in a Copper Smelter Converter and Roaster/ Reverberatory Gas Streams," EPA/CSL	Brink and Andersen Impactors	Cu Roaster and Reverberatory Furnace (ASARCO)	Dry ESP (pipe) and Parallel Type ESP	2
7	Statnick, R. M., "Measurement of SO_2, Particulate, and Trace Elements in a Copper Smelter Converter and Roaster/ Reverberatory Gas Streams," EPA/CSL	Brink and Andersen Impactors	Cu Converter	Plate Type ESP	2

Test Series No.	Report's Author and Name	Testing Equipment	Source	Control Equipment	No. of Runs
8	McCain, J. D., and W. B. Smith, "Lone Star Steel Steam-Hydro Air Cleaning System Evaluation," EPA-650/2-74-028 (1974)	Brink and Andersen Impactors. Optical Particle Counter and Diffusion Battery	Open Hearth Furnace	Lone Star Steel Steam-Hydro Scrubber	38
9	Cooper, D. W., and D. P. Andersen, "Dynactor Scrubber Evaluation," GCA Corporation (1974)	Andersen Impactor	Test Aerosol from Dust Feeder	Dynactor Scrubber	50
10	Harris, D. B., "Tests Performed at Celotex Corporation, Goldsboro, North Carolina	Pilat Impactor	Asphalt Roofing	Afterburner	1
11	Harris, D. B., and J. A. Turner, "Particulate and SO_2/SO_3 Measurement Around an Anthracite Steam Generator Baghouse," EPA/CSL (1973)	Brink Impactor	Pulverized Coal-Fired Boiler	Baghouse	4
12	McKenna, J. D., "Applying Fabric Filtration to Coal-Fired Industrial Boilers: A Preliminary Pilot Scale Investigation," Enviro-Systems and Research, Inc. (1974)	Andersen Impactor	Coal-Fired Industrial Boiler	Baghouse	3
13	Cowherd, C. et al., "Hazardous Emission Characterization of Utility Boilers," EPA-650/2-75-066	Brink Impactor	Utility Boiler	Cyclone	6
15	Statnick, R. M., and D. C. Drehmel, "Fine Particulate Control Using SO_2 Scrubbers," EPA (1974)	Brink and Andersen Impactors	Coal-Fired Utility Boiler	TCA Scrubber	14
16	Statnick, R. M., and D. C. Drehmel, "Fine Particulate Control Using SO_2 Scrubbers," EPA (1974)	Brink and Andersen Impactors	Coal-Fired Utility Boiler	Venturi Scrubber	4

Test Series No.	Report's Author and Name	Testing Equipment	Source	Control Equipment	No. of Runs
17	Statnick, R. M., and D. C. Drehmel, "Fine Particulate Control Using SO_2 Scrubbers," EPA (1974)	Brink and Andersen Impactors	Oil-Fired Boiler	Venturi MgO Scrubber	8
18	Riggenbach, J. D., E. D. Johnson, and M. K. Hamlin, "Measurement of Particulate Grain Loadings, Particle Size Distribution, and Sulfur Gas Concentrations at Hoerner Waldorf's Pulp and Papermill No. 3 Recovery System, Vols. I, II, and III, Environmental Science and Engineering, Inc.	Brink Impactor	Pulp and Papermill Recovery Boiler	ESP	38
19	Shannon, L. J. et al., "St. Louis/Union Electric Refuse Firing Demonstration Air Pollution Test Report"	Brink and Andersen Impactors	Coal-Fired Utility Boiler	ESP	26
20	McCain, J. D., "Evaluation of Aronetics Two-Phase Jet Scrubber," EPA-650/2-74-129	Brink and Andersen Impactors. Optical Particle Counter, Diffusion Battery + CNC	Ferro-Alloy Electric Arc Furnace	Aronetics Two-Phase Jet Scrubber	41
21	Bosch, J. C., M. J. Pilat, and B. F. Hrutfiord, "Size Distribution of Aerosols From a Kraft Mill Recovery Furnace," Tappi, 54(11):1871 (1971)	Pilat Impactor	Kraft Mill Recovery Furnace	ESP	4
22	McGarry, F. J., and C. J. Gregory, "A Comparison of the Size Distribution of Particulates Emitted from Air, Mechanical, and Steam Atomized Oil-Fired Burners," JAPCA, 22(8):636 (1972)	Andersen Impactor	Air Atomized Oil-Fired Boiler	ESP	1

Test Series No.	Report's Author and Name	Testing Equipment	Source	Control Equipment	No. of Runs
23	McGarry, F. J., and C. J. Gregory, "A Comparison of the Size Distribution of Particulates Emitted from Air, Mechanical, and Steam Atomized Oil-Fired Burners," JAPCA, 22(8):636 (1972)	Andersen Impactor	Mechanical Atomized Oil-Fired Boiler	ESP	1
24	McGarry, F. J., and C. J. Gregory, "A Comparison of the Size Distribution of Particulates Emitted from Air, Mechanical, and Steam Atomized Oil-Fired Burners," JAPCA, 22(8):636 (1972)	Andersen Impactor	Steam Atomized Oil-Fired Boiler	ESP	1
25	Lee, R. E., Jr., H. L. Crist, A. E. Riley, and K. E. MacLeod, "Concentration and Size of Trace Metal Emissions from a Power Plant, a Steel Plant, and a Cotton Gin," Env. Sci. and Tech., 9(7):643 (1975)	UW Mark III Impactor	Emissions from a Power Plant	ESP	2
26	Lee, R. E., Jr., H. L. Crist, A. E. Riley, and K. E. MacLeod, "Concentration and Size of Trace Metal Emissions from a Power Plant, a Steel Plant, and a Cotton Gin," Env. Sci. and Tech., 9(7):643 (1975)	UW Mark III Impactor	Emissions from a Steel Plant	Baghouse	2
27	Lee, R. E., Jr., H. L. Crist, A. E. Riley, and K. E. MacLeod, "Concentration and Size of Trace Metal Emissions from a Power Plant, a Steel Plant, and a Cotton Gin," Env. Sci. and Tech., 9(7):643 (1975)	UW Mark III Impactor	Emissions from a Cotton Gin	Wet Scrubber	2

Test Series No.	Report's Author and Name	Testing Equipment	Source	Control Equipment	No. of Runs
28	"St. Louis/Union Electric Refuse Fuel Project," MRI Project No. 3821-C(4), January 1975	Brink and Andersen Impactors	Coal-Fired Utility Boiler	ESP	67
29	"St. Louis/Union Electric Refuse Fuel Project," MRI Project No. 4033-C, Monthly Report No. 1	Brink and Andersen Impactors	Coal-Fired Utility Boiler	ESP	12
30	"Test and Evaluation Program for St. Louis/Union Electric Refuse Fuel Project," MRI Project No. 4033-C, Monthly Report No. 4	Brink and Andersen Impactors	Coal-Fired Utility Boiler	ESP	43
31	"Test and Evaluation Program for St. Louis/Union Electric Refuse Fuel Project," MRI Project No. 4033-C, Monthly Report No. 11	Brink and Andersen Impactors	Coal-Fired Utility Boiler	ESP	19
32	Toca, F. M., "Lead and Cadmium Distribution in the Particulate Effluent from a Coal-Fired Boiler," Ph.D. Thesis, University of Iowa, Ames, Iowa, July 1972	Andersen Ambient Impactor	Coal-Fired Boiler	ESP	5
33	Baladi, E., "Particle Size Distribution Tests for Beker Industries Corporation," MRI Project No. 5-1379-C	Brink Impactor	Phosphate Rock Calciner	Venturi Scrubber	5
34	Gooch, J. P., and J. D. McCain, "Particulate Collection Efficiency Measurements on a Wet Electrostatic Precipitator," EPA-650/2-75-033	Brink and Andersen Impactors. Optical Particle Counter, Diffusion Battery, and CN Counter	Aluminum Reduction Cells	ESP Preceded by Spray Towers	17
35	Bradway, R. M., and R. W. Cass, "Fractional Efficiency of a Utility Boiler Baghouse," EPA-600/2-75-013-a	Andersen Impactor	Coal-Fired Boiler	Baghouse	86

Test Series No.	Report's Author and Name	Testing Equipment	Source	Control Equipment	No. of Runs
36	McKenna, J. D., J. C. Mylock, and W. O. Lipscomb, "Applying Fabric Filtration to Coal-Fired Industrial Boilers," EPA-650/2-74-058-a	Andersen Impactor	Coal-Fired Boiler	Baghouse	28
37	McKenna, J. D., J. C. Mylock, and W. O. Lipscomb, "Applying Fabric Filtration to Coal-Fired Industrial Boilers," EPA-650/2-74-058-a	Andersen Impactor	Coal-Fired Boiler	Baghouse	7
38	McKenna, J. D., J. C. Mylock, and W. O. Lipscomb, "Applying Fabric Filtration to Coal-Fired Industrial Boilers," EPA-650/2-74-058-a	Andersen Impactor	Coal-Fired Boiler	Baghouse	5
39	McKenna, J. D., J. C. Mylock, and W. O. Lipscomb, "Applying Fabric Filtration to Coal-Fired Industrial Boilers," EPA-650/2-74-058-a	Andersen Impactor	Coal-Fired Boiler	Baghouse	11
40	McKenna, J. D., J. C. Mylock, and W. O. Lipscomb, "Applying Fabric Filtration to Coal-Fired Industrial Boilers," EPA-650/2-74-058-a	Andersen Impactor	Coal-Fired Boiler	Baghouse	7
41	McCain, J. D., "Evaluation of Centrifield Scrubber," EPA-650/2-74-129-a	Brink and Andersen Impactors, Diffusional, Optical, and Electrical Methods	Asphalt Dryer	1. Coarse Cyclone 2. Secondary Collector 3. Scrubber	31
42	Cooper, D. W., "Pentapure Impinger Evaluation," EPA-650/2-75-024-a	Andersen Impactor	Gray Iron Foundry	Pentapure Impinger	12

Test Series No.	Report's Author and Name	Testing Equipment	Source	Control Equipment	No. of Runs
43	Yost, K. J. et al., "The Environmental Flow of Cadmium and Other Trace Metals," Progress Report NSF (RANN) Grant GI-35106, Purdue University, West Lafayette, Indiana	Andersen Impactor	Zinc Coke Plant	-	1
44	Yost, K. J. et al., "The Environmental Flow of Cadmium and Other Trace Metals," Progress Report NSF (RANN) Grant GI-35106, Purdue University, West Lafayette, Indiana	Andersen Impactor	Zinc Vertical Retort	Baghouse	3
45	Yost, K. J. et al., "The Environmental Flow of Cadmium and Other Trace Metals," Progress Report NSF (RANN) Grant GI-35106,Purdue University, West Lafayette, Indiana	Andersen Impactor	Steel Mill Open Hearth Furnace	ESP	6
46	Yost, K. J. et al., "The Environmental Flow of Cadmium and Other Trace Metals," Progress Report NSF (RANN) Grant GI-35106, Purdue University, West Lafayette, Indiana	Andersen Impactor	Municipal Incinerator	Scrubber	1
48	Calvert, S., N. J. Jhaveri, and S. Yung, "Fine Particle Scrubber Performance Tests," EPA-650/2-74-093	UW Mark II and Andersen Impactors	Urea Prilling Tower	Valve Tray	12
49	Calvert, S., N. J. Jhaveri, and S. Yung, "Fine Particle Scrubber Performance Tests, EPA-650/2-74-093	UW Mark III and Andersen Impactors	Potash Dryer	Scrubber	17

Test Series No.	Report's Author and Name	Testing Equipment	Source	Control Equipment	No. of Runs
50	Calvert, S., N. J. Jhaveri, and S. Yung, "Fine Particle Scrubber Performance Tests," EPA-650/2-74-093	UW Mark III and Andersen Impactors	Coal-Fired Boiler	TCA Scrubber	6
51	Calvert, S., N. J. Jhaveri, and S. Yung, "Fine Particle Scrubber Performance Tests," EPA-650/2-74-093	UW Mark III and Andersen Impactors	Coal-Fired Boiler	Venturi Scrubber	6
52	Calvert, S., N. J. Jhaveri, and S. Yung, "Fine Particle Scrubber Performance Tests," EPA-650/2-74-093	UW Mark III and Andersen Impactors	Salt Dryer	Wetted Fiber Scrubber	16
53	Calvert, S., N. J. Jhaveri, and S. Yung, "Fine Particle Scrubber Performance Tests," EPA-650/2-74-093	UW Mark III and Andersen Impactors	Salt Dryer	Impingement Plate Scrubber	12
54	Calvert, S., N. J. Jhaveri, and S. Yung, "Fine Particle Scrubber Performance Tests," EPA-650/2-74-093	UW Mark III and Andersen Impactors	Iron Wetting Cupola	Venturi Rod Scrubber	18
55	Calvert, S. et al., EPA-600/2-76-282	UW Mark III Impactor	Gray Iron Process	Wet Scrubber	35
56	EPA Contract No. 68-02-1814, Bechtel Corporation, San Francisco, California	MRI Model 1502 and Brink Impactors	Coal-Fired Boiler	Wet Scrubber	101
57	EPA Contract No. 68-02-1814, Bechtel Corporation, San Francisco, California	MRI Model 1502 and Brink Impactors	Coal-Fired Boiler	Wet Scrubber	75
58	Hunter, S. C. et al., EPA Contract No. 68-02-1074	Brink Impactor	Coal-Fired Boiler	None	1

Test Series No.	Report's Author and Name	Testing Equipment	Source	Control Equipment	No. of Runs
59	Hunter, S. C. et al., EPA Contract No. 68-02-1074	Brink Impactor	Residual Oil-Fired Boiler	None	5
60	Hunter, S. C. et al., EPA Contract No. 68-02-1074	Brink Impactor	Residual Oil-Fired Boiler	None	2
61	Hunter, S. C. et al., EPA Contract No. 68-02-1074	Brink Impactor	Residual Oil-Fired Boiler	None	1
62	Hunter, S. C. et al., EPA Contract No. 68-02-1074	Brink Impactor	Residual Oil Boiler	None	3
63	Hunter, S. C. et al., EPA Contract No. 68-02-1074	Brink Impactor	Coal-Fired Boiler	None	1
64	Hunter, S. C. et al., EPA Contract No. 68-02-1074	Brink Impactor	Coal-Fired Boiler	None	3
65	Hunter, S. C. et al., EPA Contract No. 68-02-1074	Brink Impactor	Coal-Fired Boiler	ESP	5
66	Hunter, S. C. et al., EPA Contract No. 68-02-1074	Brink Impactor	Distillate Oil-Fired Boiler	ESP	2
67	Hunter, S. C. et al., EPA Contract No. 68-02-1074	Brink Impactor	Residual Oil-Fired Boiler	None	2
68	Ensor, D. S. et al., EPA-600/2-75-074	Impactor and Wire Screen Diffusion Battery	Coal-Fired Boiler	Wet Scrubber	33
73	Bradway, R. M. et al., EPA-600/2-76-077A	Andersen Impactor	Nonclassified Boiler	Fabric Filter	38
74	Bradway, R. M. et al., EPA-600/2-76-077A	Andersen and UM Mark III Impactors	Nonclassified Boiler	Fabric Filter	39
75	Bradway, R. M. et al., EPA-600/2-76-077A	Andersen and UM Mark III Impactors, Rich 100-CNC	Nonclassified Boiler	Fabric Filter	82

Test Series No.	Report's Author and Name	Testing Equipment	Source	Control Equipment	No. of Runs
76	Cass, R. W., and J. E. Langley, EPA-600/7-77-023	UW Mark III and Andersen Impactors, Rich 100-CNC, Bausch and Lomb Model OPC	Electric Arc Furnace	Fabric Filter	332
77	Rei, M. T., and D. W. Cooper, EPA-600/2-76-202	Andersen Impactor, Bausch and Lomb Model OPC, Rich 100-CNC	Laboratory Analysis	Wet Scrubber	52
78	Dennis, R. et al., EPA-650/2-74-036	Andersen Impactor	Prototype Test	Novel	32
79	Werner, A. S. et al., EPA-600/7-76-017	UM Mark III Impactor	Residual Oil Boiler	Cyclone	2
80	Nichols et al., "Collection Efficiency on Three ESP's," EPA-600/2-75-056	Brink Impactor, Other CCNC, Andersen Impactor, ROYCO Model OPC	Rotary Kiln in Cement Manufacture	ESP	22
81	Gooch, J. P. et al., SORI-EAS-76-471, Draft, September 1976	Brink Impactor, Whitby Electrical Analyzer 3030, Andersen Impactor	Coal-Fired Boiler	ESP	42
82	Nichols, G. B. et al., SORI-EAS-76-511	Brink Impactor	Copper Smelter	ESP	8
83	Gooch, J. P. et al., EPA-600/2-76-141	Brink Impactor, Whitby Electrical Analyzer Model 3030	Sulfate Pulping	ESP	23
84	Gooch, J. P. et al., EPA-600/2-76-141	Brink and UW Mark II Impactors	Sulfate Pulping	ESP	13
85	Nichols, G. B., and J. D. McCain, EPA-600/2-75-056	Brink and Andersen Impactors	Unclassified Boiler	ESP	12
86	McCain, J. D., "Evaluation of Rexnord Gravel Bed Filter," EPA-600/2-76-164	Andersen Impactor, Other CNC	Clinker Cooler in Cement Manufacture	Novel	49
87	Harrisburg Municipal Incinerator	Brink and Andersen Impactors	Solid Waste Incinerator	ESP	10

Test Series No.	Report's Author and Name	Testing Equipment	Source	Control Equipment	No. of Runs
88	McCain, J. D., SORI-EAS-73-052	Other	Ceramic/Clay Dryer	Cyclone	6
89	Gooch, J. P., and G. B. Nichols, SORI-EAS-77-098	Brink and Andersen Impactors, Whitby Electrical Analyzer Model 3030	Coal-Fired Boiler	ESP	33
90	EPA Contract No. 68-02-1869	UW Mark III Impactor	Borax Fusing Furnace	Wet Scrubber	25
91	EPA Contract No. 68-02-1869	UW Mark III Impactor, Wire Screen Diffusion Battery	Gray Iron Foundry	Wet Scrubber	53
98	Monsanto Research Corporation, EPA Contract No. 68-02-1816	Brink Impactor	Coal-Fired Boiler	Mobile Fabric Filter	1
99	Monsanto Research Corporation, EPA Contract No. 68-02-1816	Brink Impactor	Coal-Fired Boiler	Mobile Fabric Filter	1
100	Monsanto Research Corporation, EPA Contract No. 68-02-1816	Andersen Impactor	Coal-Fired Boiler	Mobile Fabric Filter	5
101	Monsanto Research Corporation, EPA Contract No. 68-02-1816	Brink Impactor	Coal-Fired Boiler	Mobile Fabric Filter	18
102	Monsanto Research Corporation, EPA Contract No. 68-02-1816	Brink Impactor	Coal-Fired Boiler	Mobile Fabric Filter	24
103	Monsanto Research Corporation, EPA Contract No. 68-02-1816	Brink Impactor	Coal-Fired Boiler	Mobile Fabric Filter	14
104	Monsanto Research Corporation, EPA Contract No. 68-02-1816	Brink Impactor	Lime-Recovery Kiln	Mobile Fabric Filter	23
105	Monsanto Research Corporation, EPA Contract No. 68-02-1816	Brink Impactor	Lime-Recovery Kiln	Mobile Fabric Filter	22
106	Monsanto Research Corporation, EPA Contract No. 68-02-1816	Andersen Impactor	Lime-Recovery Kiln	Mobile Fabric Filter	41

Test Series No.	Report's Author and Name	Testing Equipment	Source	Control Equipment	No. of Runs
107	Monsanto Research Corporation, EPA Contract No. 68-02-1816	Brink Impactor	Lime-Recovery Kiln	Mobile Fabric Filter	12
108	TRC	Sierra Impactor, Optical Particle Counter	Coke-Gas Boiler	None	8
109	TRC	Sierra Impactor	Bark-Fired Boiler	Baghouse	9
110	TRC	Andersen Impactor	Incinerator	Other	2
111	TRC	Sierra Impactor, Optical Particle Counter	Coal-Fired Boiler	Cyclone	20
112	Coal and Refuse Test, SORI-EAS-75-316	Andersen and Other Impactor	Solid Wastes Coal-Fired Boiler	ESP	52
113	Confidential	Brink Impactor	Steel Foundry	Mechanical Collector	7
114	McCain, J. D., and W. B. Smith, Final Report, SORI-EAS-74-158	Andersen Impactor	Unclassified Boiler	Cyclone	7
115	McCain, J. D. et al., SORI-EAS-74-418 and SORI-EAS-75-062	Andersen and Other Impactors, Other OPC	Coal-Fired Boiler	ESP	69
116	Bird, A. N., SORI-EAS-73-124	Brink Impactor	Coal-Fired Boiler	Wet Scrubber	12
117	Bird, A. N., SORI-EAS-73-200	Brink Impactor, Climet CNC, Other CNC	Steel Foundry	None	8
118	Nichols, G. B., SORI-EAS-74-009	Brink and Andersen Impactors	Unclassified Boiler	ESP	10
119	Nichols, G. B., Company Correspondence, A1402-3005-IF	Brink Impactor	Unclassified Boiler	ESP	6
120	Nichols, G. B., and J. D. McCain, EPA-600/2-75-056	Andersen and Other Impactors	Unclassified Boiler	ESP	24
121	Nichols, G. B., and J. P. Gooch, A1364-2975	Brink Impactor	Unclassified Boiler	ESP	10

Test Series No.	Report's Author and Name	Testing Equipment	Source	Control Equipment	No. of Runs
123	McCain, J. D., SORI-EAS-73-127	Modified Brink Impactor	Other/Not Classified	Cyclone	8
124	McCain, J. D., SORI-EAS-73-127	Modified Brink Impactor	Mineral Wool Cupola	Cyclone	6
127	Dismukes, E., SORI-EAS-75-311, EPA-600/2-75-015	Andersen Impactor, Other CNC	Unclassifed Boiler	ESP	15
128	Dismukes, E., SORI-EAS-75-311, EPA-600/2-75-015	Modified Brink and Andersen Impactors	Unclassified Boiler	ESP	47

TECHNICAL REPORT DATA
(Please read Instructions on the reverse before completing)

1. REPORT NO. EPA-600/8-78-006	2.	3. RECIPIENT'S ACCESSION NO.
4. TITLE AND SUBTITLE Fine Particle Emissions Information System User Guide		5. REPORT DATE June 1978
		6. PERFORMING ORGANIZATION CODE
7. AUTHOR(S) M. P. Schrag, Editor		8. PERFORMING ORGANIZATION REPORT NO.
9. PERFORMING ORGANIZATION NAME AND ADDRESS Midwest Research Institute 425 Volker Boulevard Kansas City, Missouri 64110		10. PROGRAM ELEMENT NO. EHE624A
		11. CONTRACT/GRANT NO. 68-02-2641
12. SPONSORING AGENCY NAME AND ADDRESS EPA, Office of Research and Development Industrial Environmental Research Laboratory Research Triangle Park, NC 27711		13. TYPE OF REPORT AND PERIOD COVERED User Guide; 1-5/78
		14. SPONSORING AGENCY CODE EPA/600/13

15. SUPPLEMENTARY NOTES IERL-RTP project officer is Gary L. Johnson, Mail Drop 63, 919/541-2745. This Guide replaces EPA-600/2-76-172 in its entirety.

16. ABSTRACT The report is an extensive user guide to the Fine Particle Emissions Information System (FPEIS), a computerized database on primary fine particle emissions to the atmosphere from stationary point sources. The FPEIS is a component of the Environmental Assessment Data Systems (EADS) which is designed to aid researchers in environmental assessment and fine particle control technology development activities. The FPEIS will contain source test data including particle size distributions; chemical, physical, and bioassay testing results performed on particulate samples; design and typical operating data on particle control systems applied; process descriptions of the sources; and descriptions of the sampling equipment and techniques employed. The FPEIS, a successor to the MRI Fine Particle Inventory developed in 1971, report gives detailed instructions for encoding FPEIS datasets, along with a copy of the FPEIS data input form. It discusses procedures which will provide users with access to the FPEIS either by direct computer request for authorized National Computer Center (NCC) accounts or by written request to the EPA project officer. It gives a list of standard data inquiry and retrieval requests, with instructions for their use.

17. KEY WORDS AND DOCUMENT ANALYSIS

a. DESCRIPTORS		b. IDENTIFIERS/OPEN ENDED TERMS	c. COSATI Field/Group
Air Pollution	Environmental	Air Pollution Control	13B
Instructions	Biology	Stationary Sources	06F
Dust		User Guide	11G
Data Storage		Fine Particle Emissions	09B,05B
Sampling		Information System	14B
Size Determination		FPEIS	
		Fine Particulate	

18. DISTRIBUTION STATEMENT Unlimited	19. SECURITY CLASS *(This Report)* Unclassified	21. NO. OF PAGES 301
	20. SECURITY CLASS *(This page)* Unclassified	22. PRICE

EPA Form 2220-1 (9-73)