EVALUATION OF MEASUREMENT METHODS AND INSTRUMENTATION FOR ODOROUS COMPOUNDS IN STATIONARY SOURCES

VOLUME I – STATE OF THE ART

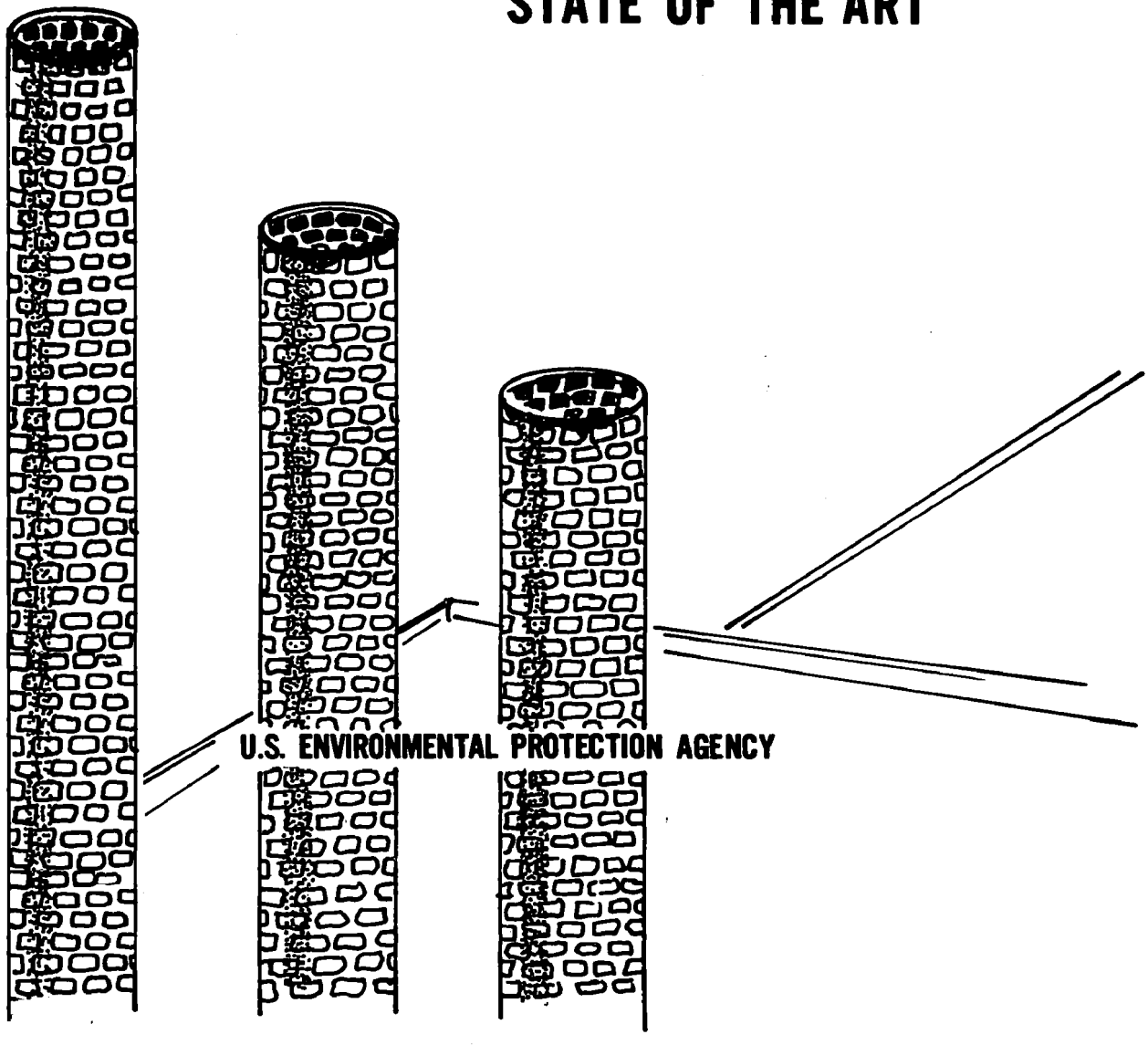

U.S. ENVIRONMENTAL PROTECTION AGENCY

EVALUATION OF MEASUREMENT METHODS AND INSTRUMENTATION FOR ODOROUS COMPOUNDS IN STATIONARY SOURCES—VOLUME I—STATE OF THE ART

EVALUATION OF MEASUREMENT METHODS AND INSTRUMENTATION FOR ODOROUS COMPOUNDS IN STATIONARY SOURCES

VOLUME I - STATE OF THE ART

by

H. J. Hall and R. H. Salvesen

Esso Research and Engineering Company
Government Research Laboratory
P.O. Box 8, Linden, New Jersey 07036

Contract No. 68-02-0219

Prepared for
ENVIRONMENTAL PROTECTION AGENCY
Research Triangle Park, North Carolina
July 1972

The APTD (Air Pollution Technical Data) series of reports is issued by the Environmental Protection Agency to report technical data of interest to a limited number of readers. Copies of APTD reports are available free of charge to Federal employees, current contractors and grantees, and non-profit organizations - as supplies permit - from the Air Pollution Technical Information Center, Environmental Protection Agency, Research Triangle Park, North Carolina 27711 or may be obtained, for a nominal cost, from the National Technical Information Service, 5285 Port Royal Road, Springfield, Virginia 22151.

This report was furnished to the Environmental Protection Agency by Esso Research and Engineering Company Government Research Laboratory, Linden, New Jersey in fulfillment of Contract No. 68-02-0219. The contents of this report are reproduced herein as received from the Esso Research and Engineering Company. The opinions, findings, and conclusions expressed are those of the author and not necessarily those of the Environmental Protection Agency.

Publication No. APTD-1180

TABLE OF CONTENTS

	Page
1. Introduction	1
2. Background	4
2.1 Odors Vs. Odorants	4
2.1.1 Characteristic Odorants	5
2.2 Problems in Emission Measurements	7
2.2.1 Range and Sampling	7
2.2.2 Sulfide Interferences	8
2.2.3 Point Source and Diffuse Source Effects	8
2.2.4 Effects of Odor Controls	9
2.3 Coulometric Titrations for Total Reduced Sulfides	10
2.3.1 Automatic Instrumentation	10
2.3.2 Major Advantages and Disadvantages	11
2.3.3 Types of Coulometric Cells	12
2.4 Methods for Detailed Analysis	14
2.4.1 Infrared and Mass Spectroscopy	14
2.4.2 Gas Chromatography	15
2.5 Continuous Sensors	15
3. Odorant Sources Considered	17
3.1 Kraft Pulping	17
3.1.1 Sulfur Odorants Present	17
3.1.2 Sources of Emissions	17
3.1.3 Sulfur Disposal	19
3.1.4 Measurement of Odorants	19
3.1.5 Requirements for Monitoring	21
3.2 Petroleum Refining/Petrochemical Operations	21
3.2.1 Sulfur Odorants Present	21
3.2.2 Sources of Emission	22
3.2.3 Petrochemical Operations	23
3.2.4 Sulfur Disposal	23
3.2.5 Measurement of Sulfur Odorants	26
3.2.6 Instrumentation for Monitoring	28

TABLE OF CONTENTS (Continued)

Page

3.3 Animal Waste Rendering Plants. 30

3.3.1 Odorant Emissions 30
3.3.2 Sources of Emission 30
3.3.3 Methods of Measurement. 34

3.3.3.1 Odor Panels. 36
3.3.3.2 Wet Chemical Methods 36
3.3.3.3 Instrument Methods 37
3.3.3.4 Spectroscopy 38
3.3.3.5 Gas Chromatography 38

4. Specific Instrumentation for S Odorants 42

4.1 Preferred Commercial 43

Coulometric Titration. 43
Gas Chromatography 53
Tape Samplers. 60

4.2 Commercial Alternates. 64

Conductimetry. 64
Ultraviolet. 66
Colorimetry. 68
Electrochemical. 72

4.3 Potential. 73

Bioluminescence. 73
Chemiluminescence. 74
Fast Scan Infrared 76
Fluorescence 78
Infrared 81
Infrared Laser Radiation 83
Metallic Silver Filters. 84
Plasma Chromatograph 86

BIBLIOGRAPHY. 87

1. INTRODUCTION

This is a state-of-the-art review made to collect and evaluate information on the instrumentation available to measure the quantities of specific odorants in industrial plant emissions. Its object is to examine the possibility of substituting a quantitative measurement of odorants for the subjective measurement of odors as a guide for the control of odorous emissions. This report completes Phase I of EPA Contract No. 68-02-0219 on "Evaluation of Measurement Methods and Instrumentation for Odorous Compounds in Stationary Sources." Phase II of this program will consist of the laboratory and field evaluation of instruments selected on the basis of Phase I.

The instrumental measurement of odorants rather than odors is a valid approach only when there is prior agreement as to what odorants are primarily responsible for odor. No reliable correlations exist in the general case between odor and the physical or chemical properties of odorants, and the extent to which satisfactory correlations have been made to date varies greatly from one industry to another. This is examined here for three specific industries which have been the subject of major odor complaints: kraft pulp mills, petroleum/petrochemical refineries, and animal rendering plants.

The degree to which instrumentation is available for field use in emission measurements can be related directly to the complexity of the odorant mixture to be measured. The nature of the odorant mixture in kraft mill emissions is well defined, and instrumentation to measure it is commercially available. The situation in petroleum refineries is more complex: a part of the odor problem is in stack emissions which can be instrumented directly, but another part is due to small amounts of material from diffuse sources which can only be measured at present by ambient methods. The odor problem in animal rendering plants is even less well defined: there is no agreement yet as to the identity of the specific odorants most responsible for the odors observed, and instruments for their detection and measurement are just now being developed.

The odorants emitted in kraft pulping consist primarily of four reduced sulfides: H_2S, methyl mercaptan, dimethyl sulfide, and dimethyl disulfide. The H_2S and methyl derivatives are considered equally objectionable in odor complaints, and they are frequently measured together as total reduced sulfide (TRS). They are present in varying proportions in different streams, together with moderate amounts of SO_2 which is not malodorous. The literature provides ample evidence that these four are the key components both for odor emissions and for process changes to control them. The much smaller amounts of higher sulfides which are present have a secondary effect and they respond similarly to the methyl homologs in odor controls.

Petroleum/petrochemical refinery emissions also contain H_2S and mercaptans, as key components. The problem of odorant measurements is much different from kraft mills, however, since a primary object of petroleum refining is the removal and disposal of large amounts of sulfur present in the original feed stock. The refining process handles many streams rich in H_2S and other organic sulfides. These are converted to non-odorous products, chiefly elemental sulfur and SO_2.

The principle emission point for residual sulfides in the refinery is the burner stack of the sulfur plant. This normally consists chiefly of SO_2 and other combustion gases. It may contain H_2S or other sulfides during periods of upset conditions. Small amounts of carbonyl sulfide are also present, and they normally exceed the amount of H_2S. The sulfur plant in a modern refinery processes all collectible gas streams to remove residual H_2S and sulfides, before the gas is vented to the atmosphere. The odorants emitted from small diffuse sources throughout the plant are more varied in composition. Key components include H_2S, alkyl and aromatic mercaptans, all of which will be included in an ambient measurement of total reduced sulfur. The massive amounts of SO_2 compared to reduced sulfur in refinery emissions are a complicating factor, and the contribution of COS requires further study.

The odorant picture for animal rendering plants is much less clear. The composition of the odorants released is directly related to the nature and quality of the material being processed. Odorants such as trimethylamine which are highly characteristic of the emissions from a plant processing feathers, hair, or fish meal are minor components or missing in plants processing animal flesh. Other objectionable amines such as skatole, putrescine and cadaverine are present only if the feed to the plant is not properly washed, or if it contains badly decayed flesh, which can be avoided. The odorants recognized as generally characteristic of animal waste rendering include aliphatic aldehydes, free fatty acids, ammonia, and variable amounts of amines and H_2S depending on the specific feed stock. The laboratory instruments available for the analysis of these recognized odorants are reviewed herein, to indicate preferred approaches for a prototype for field use.

The continuous automatic instrumentation available for the direct measurement of total reduced sulfide depends upon two types of sensors: bromine coulometric titration, and the flame photometric detector. Coulometric titration can be carried out continuously in a flowing stream, or in a microcoulometer which accepts very small discrete samples such as the fractions eluted from a gas chromatographic column. Both approaches are very useful for differential measurements, but they are subject to difficulties with zero stability which require frequent calibration if absolute values are desired. Coulometric cells can also be based on titration with iodine or with silver ions, which respond to different portions of the total sulfur present.

Flame photometry responds equally to all sulfur atoms. It can be used as a total measurement, or more desirably in a GC/FPD combination. This permits a distinction between S types such as H_2S, SO_2, total S, or some other selected component such as methyl mercaptan. Automatic programmed equipment for such measurements is available.

Continuous measurements can also be made using lead acetate tape samplers or similar automatic instruments which are sensitive only to H_2S, or to H_2S and mercaptans as key components.

An alternate approach is to convert all sulfur compounds present to SO_2, with or without a preliminary separation of the SO_2 initially present, and use this as an analysis of sulfides in the sample. This combination has been applied particularly with a conductivity cell or a microcoulometer for the detection of SO_2. It could also be used with any of the very large number of SO_2 detection systems available. The analogous approach of catalytically or thermally converting all sulfur compounds to H_2S has also been used, particularly with the silver cell microcoulometer or lead acetate tape as the sensor for H_2S.

Wet chemical methods which consume reagents are considered intrinsically less desirable for field measurements than the use of electrical or optical sensors, but they are much more flexible when analyses of varying composition are required. Most of the present standard methods for product quality measurements in petroleum refining are based on wet chemistry. Many of these measurements can be automated, if enough samples are to be measured in a given time. Nevertheless, they have been excluded as far as kraft mills and refineries are concerned in the present review, which is aimed primarily at the evaluation of physical methods of measurement. Automated wet chemistry may well be a preferred approach to the analysis for odorants in animal rendering plants, where both qualitative and quantitative base data are still required.

The review which follows presents background information in Section 2 for the basic definitions of the problem of odorant emission measurements, and the types of instrumentation available. Section 3 gives details of the three industries considered as odorant sources. Section 4 summarizes the information on specific instruments which are commercially preferred, on available alternates, or potential alternates where further development is required.

2. BACKGROUND

2.1 Odors vs. Odorants

The measurement of odors is the one problem in air pollution in which the subjective response of human sensors has continued to be most important. At present, there are no known physical or chemical properties of odorous materials which correlate with their odor, and the only accepted method of measuring odors as such is a panel of human observers.

Odor is measured on a hedonistic scale, in terms of degrees of pleasure or obnoxiousness. The usual scale has five units, from zero or undetectable to intolerable or overpowering. This scale, like many biological reactions, is related exponentially to the amount of the stimulus, so that it is linear by orders of magnitude. A typical curve is that shown by Wright (26) for ethyl mercaptan, in Figure 1:

Figure 1

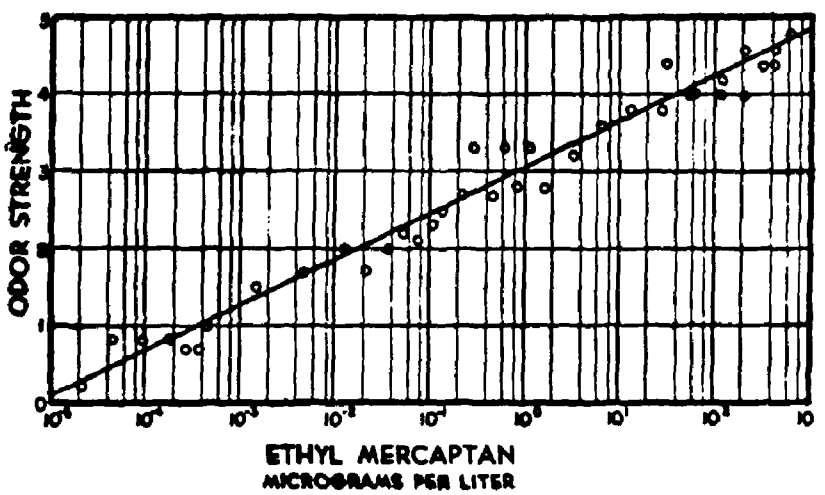

The relationship between odor intensity and odorant concentration is considered as a classic example of the Weber-Fechner Equation (1):

$$P = K \log S$$

where P = odor intensity, K = constant, S = odorant concentration. Values of K for different materials range from 0.3 to 0.6; at 0.5, one unit on the odor intensity scale corresponds to two orders of magnitude in concentration.

The statistical reliability of odor panel measurements involving several individuals is considered no better than $\pm$ 1 unit on the intensity scale. Recent data on a biological response to chemical stimulus have a bearing on such measurements, from results obtained with a bio-luminescence detector. This device measures the change in light emission of a luminescent bacterial culture, on exposure to a chemical to which the particular strain has been sensitized. This is a biological response which is free of subjective influences. The detector can distinguish clearly between SO_2 concentrations of 0.2, 2.0 and 20 ppb (10^{-9}), with about two to three levels of discrimination between each order of magnitude.

The number of odor levels between odorant orders of magnitude corresponds to the constant in the Weber-Fechner equation. The analytical significance of this coefficient is that it takes a shift or change of some -50% to +100% in a measured concentration to be biologically detectable as a difference. This means that odorant measurements within ± 20 to 50% may be quite acceptable for odor correlations, even though they would be considered marginal or worthless from the viewpoint of conventional analytical chemistry.

If odorous compounds are to be measured for purposes of pollution control, it is necessary to determine first what compounds to measure, and where, and in what amounts. The determination of what to look for is a major problem. It has been estimated that the human nose is sensitive enough to determine concentrations of the range of 10^9 molecules per ml. of air, and the stated limit of detectability is continually going down with improved methods of test. The odor threshold for H_2S was stated as 0.13 ppm in 1930 (2), 20 ppb in 1962 (3), and 0.5 ppb in 1968 (4). The total effect is usually due to a mixture of many odorants, at extremely low concentrations. Dravnieks has estimated (5) that the odors emanating from a human being consist of from 150 to 500 different compounds or groups of compounds, but that as few as 15 groups are enough to distinguish types of humans such as Caucasian male, Caucasian female, and Asian Indian (vegetarians). If only a limited number of compounds are to be measured they must be chosen on the base of experience, or the statistical analysis of large amounts of data which indicate that a useful correlation between odor and odorant does exist. The odorant approach is valid only when there is prior knowledge that the particular compound to be measured is significant (45).

2.1.1 Characteristic Odorants

One class of odorants for which the connection between odor and chemical composition is clearly known are the volatile sulfides, including H_2S (rotten egg odor), the mercaptans (skunk odors), and the organic sulfides which are the thioethers of the mercaptan thio-alcohols. The human odor response is highest for methyl and ethyl mercaptan, a little higher for ethyl (lower threshold), and in each case the odor response is somewhat lower (higher threshold) for the sulfide than it is for the corresponding mercaptan. These relationships are shown in Figure 2.

Hydrogen sulfide, mercaptans and organic sulfides as a group are easily recognized by their odor, and known to be present in the uncontrolled emissions from pulp and paper mills and from petroleum refineries. Further studies have shown that H_2S and methyl mercaptan and its derivatives are usually by far the major compounds of this series present, and that they may be considered as key components for the measurement of sulfides as a whole. The recognition that they are important odorants has led to the development of automated industrial chemical and instrumental methods for their measurement, which are reviewed further herein.

Figure 2

Variations in Odor Threshold with Number of C Atoms in Several Series of Non-branched Homologs (5)

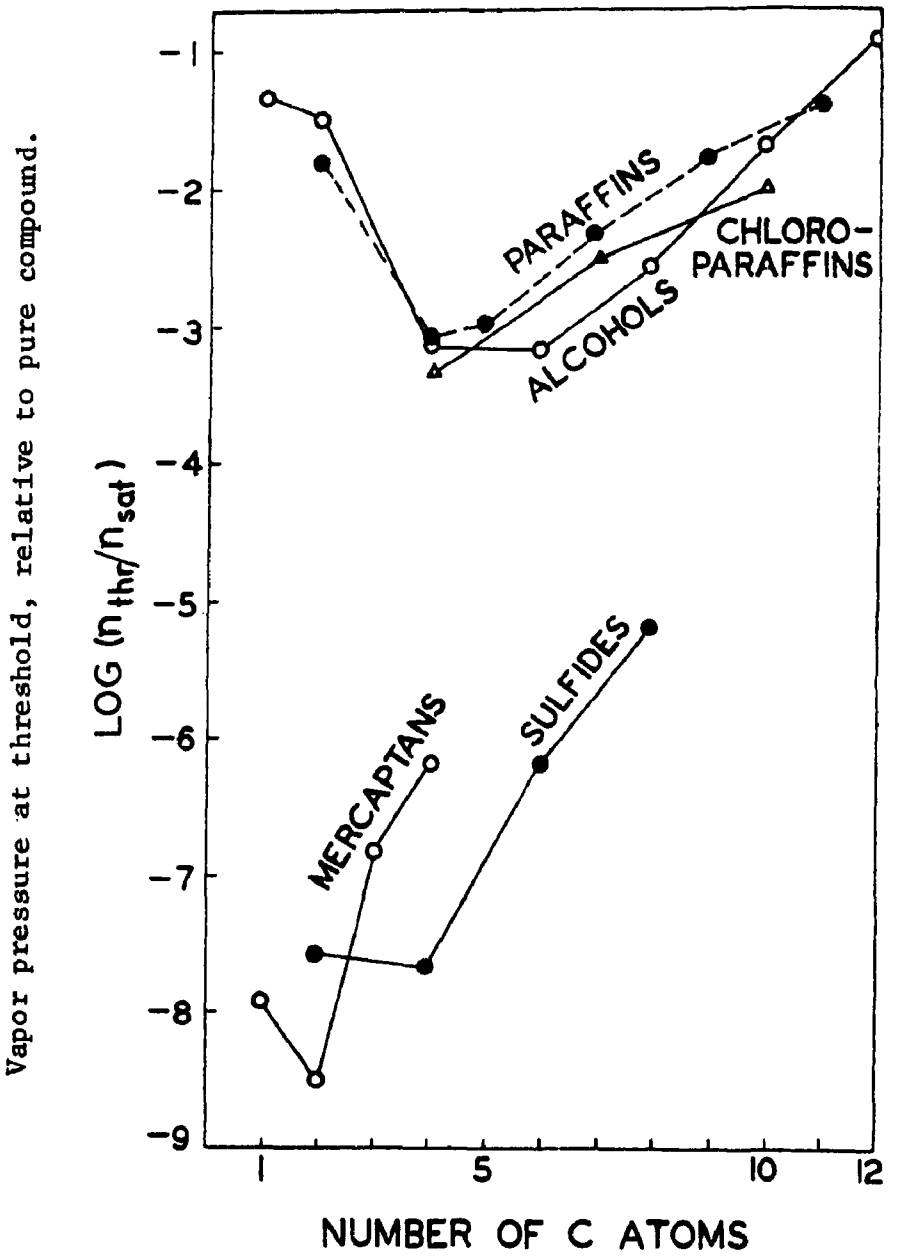

In many industries there is no such body of information as to which specific odorants are most important, either in terms of quantity or in terms of contribution to the odor effect. This is the case for the odor emissions from animal waste rendering plants. The total odor effect from these sources is strongly affected by the presence of particulates or moisture droplets, which can adsorb enough odorant near the source to carry a strong odor stimulus in individual particles to a distance. Under these conditions, the usual relationships governing dilution effects by atmospheric dispersion do not apply. Qualitative data are available to indicate that aliphatic aldehydes, free fatty acids, and alkyl amines are present as major odorants, but very little is known as to their amounts, or what changes these amounts during plant operations. In this situation, the collection of data on selected odorous materials in terms of their amount and relationships to odor panel measurement on the one hand and plant operating conditions on the other are a necessary first step. Instrumentation suitable for measurements of the mixed aldehydes, free acids and amines characteristic of animal waste rendering odors is available, but only at the research level. It is still to be assembled into a prototype and tested before it is available for use in the field.

2.2 Problems in Emission Measurements

The measurement of odorants at the emission level rather than at ambient dilutions presents special problems of sensor range, sampling procedure, and interference effects. The specific nature of these problems depends upon the source being measured.

2.2.1 Range and Sampling

In the case of kraft pulp mills, the total emission of H_2S and organic sulfides ranges from about 300 to 600 ppm in the older uncontrolled operations, to less than 3 ppm in the best modern mills. This is commonly referred to as total reduced sulfur (TRS). Regulations now in force or set in various jurisdictions specify a total allowable sulfide emission of 17.5 ppm. TRS measurements in the emission range have been standard practice in the industry for purpose of process control, and the sensors in commercial equipment are designed for this range (6)

The problem of sampling in kraft mill odorant measurements is serious, and it has not been entirely solved. The stack gases which are the principal emission source are hot, wet, and dirty, and subject to rapid and wide fluctuations in concentration and amount. Major efforts to improve this situation have been made by individual industries and the industry's trade association NCASI (National Council for Air and Stream Improvement). The standard Barton Instrument probe includes integral filters and a timed blow-back cycle designed to minimize these problems. All measuring instruments, however, are subject in some degree to the complications caused by the inability or failure of the sampling system to provide a clean gas sample for analysis. Thus, the ability of a given instrument to handle or withstand poor samples is an important characteristic for field evaluation tests (7).

2.2.2 Sulfide Interferences

The reaction of SO_2 as an oxidizing agent toward reduced sulfur compounds and particularly toward H_2S can cause serious interferences in the emissions concentration range. This is a major problem in stack sampling. The reaction is promoted by heat, moisture and reactive particulate surfaces, all of which may be present. The result is to form water and elemental sulfur which drop out in the sampling line, and can easily clog the apparatus while vitiating the analysis.

The sulfur compounds of interest in kraft mill and petroleum refinery emissions have many chemical and physical properties in common. An instrument based such a non-specific property will respond to any sulfide present. With such an instrument, all other compounds in the group will count as interferences when only one of them is of interest. This makes it relatively easy to analyze for total sulfur, but correspondingly difficult to measure say H_2S alone, or total reduced sulfur in the presence of large amounts of SO_2.

The ability to discriminate between individual sulfur compounds or types when the sensor responds to all depends on a preliminary separation into fractions, which may then be separately analyzed by the same sensor to measure their sulfur content. Separations of this type can be made by a series of chemical absorption solutions (8), by a similar series of dry absorption filters (9) or by gas chromatography (10) Any of these methods can be applied to a sensor which does not discriminate between sulfur types, such as a bromine coulometer or a flame photometric detector.

2.2.3 Point Source and Diffuse Source Effects

While measurements at the emission levels of 1-100 ppm correspond to standard industrial practice in kraft pulp mills, this is not true in many other industries. In petroleum refineries, instrumentation for sulfide measurements has been primarily at the percent level, for process streams rich in H_2S or sulfur-containing hydrocarbons, or at ambient levels near or below 1-10 ppm for toxicity alarms and air pollution effects. No instrumentation has been regularly applied to the measurement of odorous emissions from animal rendering plants, and new proposals for such measurements are just now appearing in the literature.

Emissions measurements apply only to effluents from a discrete source such as a stack or vent line, while the total odor effect of a plant may include many diffuse sources. Both are important in plants such as a petroleum refinery, or animal waste rendering, where process flow streams include odorants in high concentration. The odor effects of many small leaks, each in low amount, can only be evaluated by ambient measurements.

Ambient measurements are of more interest than emissions measurements as far as odor thresholds and esthetic effects are concerned. No direct health effects effects are expected below 1 ppm, however, in the emissions range, even with materials as toxic as H_2S (16).

2.2.4 Effects of Odor Controls

Emissions measurements frequently apply to the analysis of effluents before and after a treatment to reduce their amount. Odor controls for this purpose may remove the odorant by oxidation or other chemical conversion, combined with dilution by ventilation in confined areas or dispersal in open air, or by absorption or scrubbing. Chemical conversion by oxidation may be effective only if the oxidation is complete, resulting in final products which are either odorless or much less odorous than their precursors (11, 12, 13, 14). Partial oxidation can increase odor. Direct flame incinerators are used for air oxidation employing temperatures of 1,100 to 1,500°F, while catalytical decomposition systems operate at temperatures 500-800°F lower (11, 13, 14). Chemical conversion by oxidizing agents such as ozone, permanganates, and chlorine compounds does not result in complete oxidation, and it is important to appraise the actual degree of odor reduction obtained. Proper incineration is capable of reducing odor discharges by more than 99.99% in some instances, and only rarely by less than 99% (12, 13). Control by absorbants is practically synonymous with the use of activated carbon, and has usually been found effective, though expensive if applied to large amounts of odorant. In contrast to these results, the effectiveness of odor control by time honored water-spray scrubbing techniques has been found to be quite variable--from less than 50% in some installations to about 90-95% at best (16)

Partial oxidation or oxidation/reduction reactions frequently introduce new compounds into the odorant mixture. An important constituent of this type is carbonyl sulfide. This appears in the stack gases from a kraft mill when the recovery furnace is overloaded, and is a regular constituent of the emissions from the Claus sulfur plants used instead of burning for the disposal of refinery streams rich in H_2S. The odor response of COS can vary markedly from one individual to another, and it is not included in the usual definition of TRS as H_2S and total organic sulfides. The response of a given instrument to COS is important either way, since it may be included with H_2S (by FPD), excluded (Barton or Philips) or give a partial response (Dohrmann silver reductive cell). Further research is required on the significance of this compound in the measurement of odorants.

2.3 Coulometric Titrations for Total Sulfide

2.3.1 Automatic Instrumentation

Automatic instrumentation for the measurement of organic sulfide emissions was an industrial outgrowth of U.S. government research at the end of World War II. The original problem was to detect and record very minute concentrations of mustard gas in air. A highly sensitive coulometric cell capable of making this measurement was based on the chemical oxidation of the organic sulfide with electrolytically generated bromine:

$$RSR + Br_2 + H_2O \longrightarrow R_2SO + 2H^+ + 2Br^-$$

The measurement can be made continuously on a flowing stream, in terms of the bromine required to react with various forms of oxidizable sulfur present in the sample. In the coulometric cell, the potentiometric end-point and electrolytic generation are coupled through a feed-back amplifying system. This controls the rate of reagent generation so that it is at all times equal to the rate of reagent disappearance in the gas titration. The current required to generate the bromine a function of the sulfide concentration.

The commercial instrument developed on this basis by Austin at the Consolidated Engineering Corp. in Pasadena was known as the Titrilog (16). It was originally offered for the monitoring of natural gas odorants, air pollution studies, and a variety of uses involving the detection of hydrogen sulfide. The instrument has gone through several generations of improvements, and is the predecessor of the Barton Titrator now available as Models 286 and 400.

The coulometric cell proved to be very useful in the measurement of odorous emissions in the pulp and paper industry, which consist primarily of sulfur compounds oxidizable by bromine. Early demonstrations of its success showed that the measurement of total reduced sulfur in these emissions was a powerful tool to follow the results of process changes on the amounts of odorous emission. Its speed of response and sensitivity were used to advantage in the study of new methods of odor control, particularly in Kraft mills. Improvements were made in the Barton Titrator to increase its sensitivity and range to both lower and higher limits, so that the same instrument can be used for direct measurements from 0.01 to 1000 ppm of total reduced sulfur. This covers both the ambient and emission ranges. Its use in Kraft mills has expanded rapidly in the last five years, using improved methods of sampling and sample pretreatment developed by workers at Crown Zellerbach (17) and Weyerhaeuser (8) in Washington, and in a series of research and field projects sponsored by NCASI, the pulp and paper industry's National Council for Air and Stream Improvement.

Bromine coulometry can be used to measure hydrogen sulfide, sulfur dioxide, mercaptans, thioethers, organic disulfides and thiophenes. This includes all of the organic sulfur compounds which are recognized as characteristic odorants in Kraft mills, and the same compounds as characteristic odorants in petroleum and petrochemical refining. It also includes the two major inorganic sulfur pollutant gases, H_2S and SO_2. Sulfur trioxide, carbonyl sulfide and carbon disulfide are inorganic gases which do not titrate with bromine.

Iodine coulometric cells have also been developed commercially by Austin (a Barton prototype), and Dohrmann (oxidative microcoulometer). Iodine titrates SO_2, H_2S, and mercaptans, but does not react with other organic sulfides or disulfides. Dohrmann oxidative cells of this type are widely used. Theoretically, the difference between analyses with an iodine cell and a bromine cell could be used to calculate the total of these sulfides and disulfides, but this approach over-emphasizes small differences between the two cells and it has not proved practical (18).

2.3.2 Major Advantages and Disadvantages

1. All reduced sulfur compounds react:

The fact that one instrument responds to such a variety of hydrogen sulfide and reduced organic sulfur compounds has been a distinct advantage since all of these compounds appear together, in varying proportions, in the odorous emissions which are to be measured. However, the lack of discrimination between different types of sulfur compounds is also a disadvantage.

2. Conversion factors differ for different compounds.

The amount of halogen required for the titration is not the same for different sulfur types, so that the conversion factor between cell output and sulfide concentration varies with a varying ratio of sulfur compound types. The exact course of this oxidation is not known in detail, and it does not correspond stoichiometrically to any single reaction. The following reactions are typical (19):

Theoretical Reaction with Bromine	S Compound Mol. Wt.	Conversion Factors Observed (x millivolts = ppm, 10x range)
$H_2S + Br_2 \longrightarrow S + 2HBr$	34	0.86
$CH_3SH + 2Br_2 + 2H_2O \longrightarrow CH_3SO_2H + 4HBr$	46	1.3
$(CH_3)_2S + Br_2 + H_2O \longrightarrow (CH_3)_2SO + 2HBr$	66	3.5
$SO_2 + Br_2 + 2H_2O \longrightarrow H_2SO_4 + 2HBr$	64	2.0

The problem which this creates can be ignored by using the factor for H_2S and reporting the total calculated "as H_2S". The value thus obtained is called "total reduced sulfur". This is justified as a simple method to get a useful result, because the compounds measured are usually present together, and they are removed together by the usual methods of control. If it is known, however, that another compound type such as mercaptan predominates in a mixed stream, more accurate data may be obtained by using its factor instead in the data conversion. For any higher accuracy it is necessary to carry out a preliminary separation into individual compounds or compound types, by subtractive chemical absorption or otherwise, and measure each fraction using its appropriate conversion factor. All three of these approaches are used.

3. Prefilter separations are not exact.

Unfortunately, the separation by sulfur compounds types which is obtained by chemical absorption filters is only approximately quantitative. Automatic equipment is available to make such measurements in a programmed cycle, but it is not widely used except for research. The TRS measurement is much simpler to make. Even though it is admittedly a compromise, it is considered a reliable basis for the measurement of differences, to indicate the direction and magnitude of changes in odorant concentration as a result of process changes in the plant.

4. Interaction effects are possible.

A further limitation of the coulometric cell in the discrimination of individual compounds or types in a mixed sample is the possibility of secondary interaction effects on the stoichiometry of the oxidation reaction, when there are marked changes in the ratio of sulfur types present. When this occurs, the results obtained in a mixed sample will not exactly equal the sum of the results obtained on separate fractions.

2.3.3 Types of Coulometric Cells

Coulometry is based upon the principle of electrically generating a selected titrant (ion or element) in a titration cell. This may be a free halogen (bromine or iodine) in aqueous solution, as an oxidizing agent, or a metal ion (silver) as a reducing agent. The electrolytic current required to generate the titrant as it is consumed is a linear measure of the concentration of reactable compounds in the gas sample. In practice, the titration cell has two sets of electrodes--a generating pair and a reference pair. The electrical relationship between these differs in different types of cells.

1. In the Barton bromine cell and the Philips SO_2 Monitor bromine cell a constant low level of titrant is continuously maintained to produce a "zero level" on the instrument. When reactable compounds enter the cell, the available titrant is consumed. The associated feedback amplifier responds to the change in sensed titrant level and generates sufficient additional titrant to maintain the "zero level" concentration. In this type of cell, the generation rate of free halogen as titrant is governed by a control circuit which senses an excess of halogen, at a level fixed by the depolarization of and flow of current through the reference electrode. In this case the generating current required to maintain that excess is measured, and is proportional to the measured component.

2. In a second type of titration, the cell is driven by a constant current source. The consumption of free halogen prevents reaction at the cathode and current flows instead through the reference electrodes. The reference current is measured and is proportional to the decrease in halogen concentration and thus to the concentration of reactable pollutant in the sample. (Dohrmann Microcoulometer, Beckman 906A).

3. In another type of cell, hydrogen is allowed to build up on the electrodes. Current flow, limited by diffusion to the electrode surface, is proportional directly to halogen concentration and inversely to the concentration of reactable pollutant. (Atlas 1203).

The Barton Titrator Model 400 for pulp and paper plant use is a modification of the earlier Titrilog (19), which adds an optional SO_2 filter cycle to the basic total sulfur Model 286. A high degree of selectivity in SO_2 removal in obtained by absorption in 3% aqueous potassium acid phthalate. Total sulfur includes SO_2, and total reduced sulfur includes H_2S, mercaptan, sulfide, and disulfide. These sulfur compounds can be separated by type if desired and measured separately, using an auxiliary system of absorption filter cells which can be automated (Model 327). The Titrator measures bromine oxidizable sulfur gases through the entire range from 10 ppb to 1000 ppm. This is the widest range for direct measurements of H_2S and TRS of any instrument which has been available for purchase, and the convenience of using the same instrument for both ambient and emission measurements has been one factor in its acceptance in the industry.

Microcoulometric cells which operate on small discrete samples rather on a flowing stream have become widely accepted during the past two or three years as preferred methods for the research laboratory determination of low concentrations of sulfur, in either Kraft mill gases or petroleum products. Their major advantages are sensitivity and speed, and the fact that they require only microliter amounts of liquid sample or milliliter quantities of gas.

There are two principal types of microcoulometer cells. The oxidative cell was originally developed as a specific gas chromatographic detector, and linked directly to the column outlet through a combustion unit which converts all S compounds to SO_2 for the titration. An alternate is the reductive microtitration cell utilizing silver-silver chloride electrodes, used for the coulometric analysis of hydrogen sulfide and mercaptans (20). The reductive cell will not respond to SO_2, or to alkyl sulfides and disulfides. The reductive method is usually combined with a preliminary hydrogenolysis by which the sulfur compounds present in the sample are reduced to hydrogen sulfide, over a Pt/alumina catalyst in a stream of hydrogen, and titrated with silver ions. The silver cell can also be used for the determination of ammonia, or ammonia formed from nitrogen compounds by catalytic reduction with hydrogen.

The microcoulometer, originally combined with a preliminary decomposition by combustion to SO_2 or hydrogenolysis to H_2S prior to titration, may also be used to advantage for the direct titration of the sulfur species which react. These are SO_2 in the oxidation mode, and H_2S or RSH in the reductive mode. H_2S and RSH also react in the oxidative mode, but with less favorable conversion factors.

Commercial models of the microcoulometer are marketed by the Dohrmann Instrument Co. (now Envirotech Corp.). The original model was an iodine cell, and this has been used extensively in the petroleum industry. Its effective range covers three orders of magnitudes, from about 0.2 to 1000 ppm of sulfur. The addition of sodium azide to the electrolyte overcomes the interference effects of small amounts of chlorides or nitrogen oxides (21), which are often responsible for short electrolyte life. The original design of the iodine cell was modified and converted to bromine coulometry by Adams (22) with improved sensitivity for ambient measurements at concentrations down to 3 ppb of hydrogen sulfide. Both the iodine and bromine cells are available from Dohrmann (Envirotech).

The zero adjustment in the Barton and Dohrmann cells is an approximation which is never exact, since it is a dynamic balance involving the small amount of bromine gas physically swept out of the cell by the constant flow of sample carrier gas, in the absence of reactive sulfur compounds in the sample. The effect has been minimized in the Philips cell by changes in cell geometry and improved mixing within the cell. This zero and the cell readings above it also respond sensitively and promptly to any change in the flow rate, pressure, or molecular weight of the gas flow through the cell.

2.4 Methods for Detailed Analysis

2.4.1 IR and Mass Spectroscopy

The determination of individual compounds in a complex odorous plant emission is a laboratory research problem in which the most sophisticated methods available can be employed. Basic studies of this type have been made using both infrared and mass spectroscopy, and such measurements are necessary to define the specific compounds which need to be measured for purposes of monitoring. This includes both qualitative and quantitative data on composition. In the general case of odorous compounds it is necessary sooner or later to make a further correlation by data or by analogy between the amount of a given odorant and its contribution to total odor response. However, such a correlation, while it is required, is not a part of the present project. Once the nature and concentration range of the odorous components to be measured has been defined, a much simpler method is desirable for field use to measure a selected group of key components.

The complete analysis of individual components by infrared, mass spectrometry or other sophisticated spectroscopic methods gives definitive results, but these methods are time consuming, expensive, and not suited for routine use in the field (6). The odorants to be measured by instrumentation for H_2S and TRS in Kraft mills and in petroleum refining are known, as the result of prior studies, and it is necessary to control them all if complaints from obnoxious odors are to be avoided. The research methods are still useful and used to great advantage for special purposes such as the study of trace impurities or the mechanism of reactions, but the large amount of additional information which they supply is neither necessary nor desirable for routine use in the monitoring of emissions.

It is also possible to make simplified equipment using either infrared or mass spectroscopy which is suitable for field use to measure a single pollutant compound in air, but IR is not a good method for H_2S and the other odorants of interest are a complex mixture. While further developments may appear along these lines, other approaches have turned out to be simpler, to date.

2.4.2 Gas Chromatography

Gas chromatography (GC) has been used to great advantage in the analysis of odorous emissions (9). It was one of the early industrial uses of this new technique, starting in 1957 with studies by the British Columbia Research Council (23) and in parallel studies since 1958 by Adams and co-workers at the University of Washington (24). The GC technique can be used either for complete analysis or, by a proper choice of substrate and elution procedures, it may be used for a short-cut analysis in which a few compounds of particular interest are measured first. In a preferred technique, the rest of the sample can then be back-flushed out of the column and discarded, to restore the column to its original state for another run in minimum elapsed time.

One limitation on the sensitivity and discrimination of the GC technique was originally the type of sensor available to detect changes in composition, for the minute amounts of material in the succeeding fractions eluted from the column. The original analysis using thermal conductivity cells which responded to about 500 ppm of sulfur compounds on direct injection was improved by substituting the flame ionization detector (FID) which responds to about 5 ppm of organic sulfide, and still further improved by the flame photometric detector (FPD) which is sensitive to 3 ppm of sulfur compound in the GC concentrates. The FPD responds equally to sulfur in SO_2, sulfide, or any sulfur compound which is combustible in a hydrogen-rich flame. The combination of GC/FPD is just now becoming available in commercial instruments which are offered as Bendix Model 8700 and Tracor Model 250H, and Varian Aerograph Model 1490.

2.5 Continuous Sensors

Over the past two decades, instrumentation researchers and manufacturers have put most of their efforts into the measurement step of the analytical process. Sensors that measure all sorts of properties, for both identification and quantification, have been developed to a high degree of analytical sophistication. Some of these sensors have high sensitivity, low holdup, and rapid response, and are suited with little or no modification to continuous analysis. Developments along these lines have been summarized in detail by Blaedel (25). The methods listed in Table 1 have been used or recommended for the continuous analysis of organic sulfides or their conversion products, H_2S or SO_2.

Table 1

Continuous Sensors for Sulfur Compounds

Electrical sensors		Optical sensors
Conductometric		Colorimetric (spectrophotometric, visible region)
Coulometric titration:	Bromine	Fluorimetric
	Iodine	Infrared spectrophotometric
	Silver ion	
Flame Ionization detectors		Turbidimetric
Polarographic		Ultraviolet spectrophotometric
Potentiometric: specific ion electrode		
Potentiometric titrations		Mass spectrometric
Thermistor: thermal conductivity		

The ability of an instrument to make continuous measurements rather than cumulative measurements in the field is a desirable characteristic, and it is essential when the readings obtained are to be related directly to process controls. Continuous sensors of the types listed are discussed further in Section 4 of the present report.

3. ODORANT SOURCES CONSIDERED

3.1 Kraft Pulping

3.1.1 Sulfur Odorants Present

The characteristic odor for which kraft pulp mills are known as a major source of air pollution is due to a mixture of reduced sulfur compounds consisting largely of hydrogen sulfide, methyl mercaptan, and its derivatives dimethyl sulfide and dimethyl disulfide. Very much smaller amounts of higher sulfides are present (26). The methyl derivatives predominate because of the chemical structure of wood, for the same reason that methyl alcohol is formed in wood distillation.

The same four compounds appear in all of the gas streams produced in kraft pulping, in varying proportions. Terpene hydrocarbons are also released in the treatment of soft woods and may contribute to odor, but they are not considered as objectionable as the sulfides and mercaptans. Sulfur dioxide appears in the stack gases from the recovery furnace and the lime kiln, in an amount which is normally low or moderate compared to total reduced sulfur.

The sulfur odorants emitted in the kraft process come from the pulping reaction. They are not part of the feed to the process (wood) or the product (pulp), but they are chemical products of the reaction, and the sulfur which they contain is reusable in the process.

Sulfite pulping is an alternate to the kraft process which produces no H_2S or organic sulfide emissions, only SO_2. Its use is limited and decreasing, however, since it is employed primarily in reprocessing plants and on a limited variety of woods which are not those most readily available. The present review is based on kraft pulping.

3.1.2 Sources of Emission

The pulping process is a means of chemically dissolving the lignin in wood away from cellulose fibers which are then made into paper. The kraft pulping reagent is an aqueous solution of sodium sulfide and hydroxide. A major feature of the process, shown schematically in Figure 3, is its ability to recover most of the chemicals from the spent treating liquor and re-use them for the next batch (26). Sodium sulfide is continuously regenerated from the H_2S and organic sulfides released and recovered in the cycle.

The combined fresh and regenerated white liquor is mixed with wood chips and cooked for 3 hours in one of a battery of large upright digesters, with steam at a pressure of approximately 110 psig. Digester gases are relieved periodically during the cooking period to reduce the build-up of pressure within the system. At the end of the

cooking, the bottom of the digester is suddenly opened and its contents forced into a blow tank. Here the major part of the spent cooking liquor containing dissolved lignin is drained off. The raw pulp is filtered free of undissolved knots, washed, bleached, pressed, and dried ready for further use.

Figure 3

Schematic Diagram of the Kraft Pulping Process

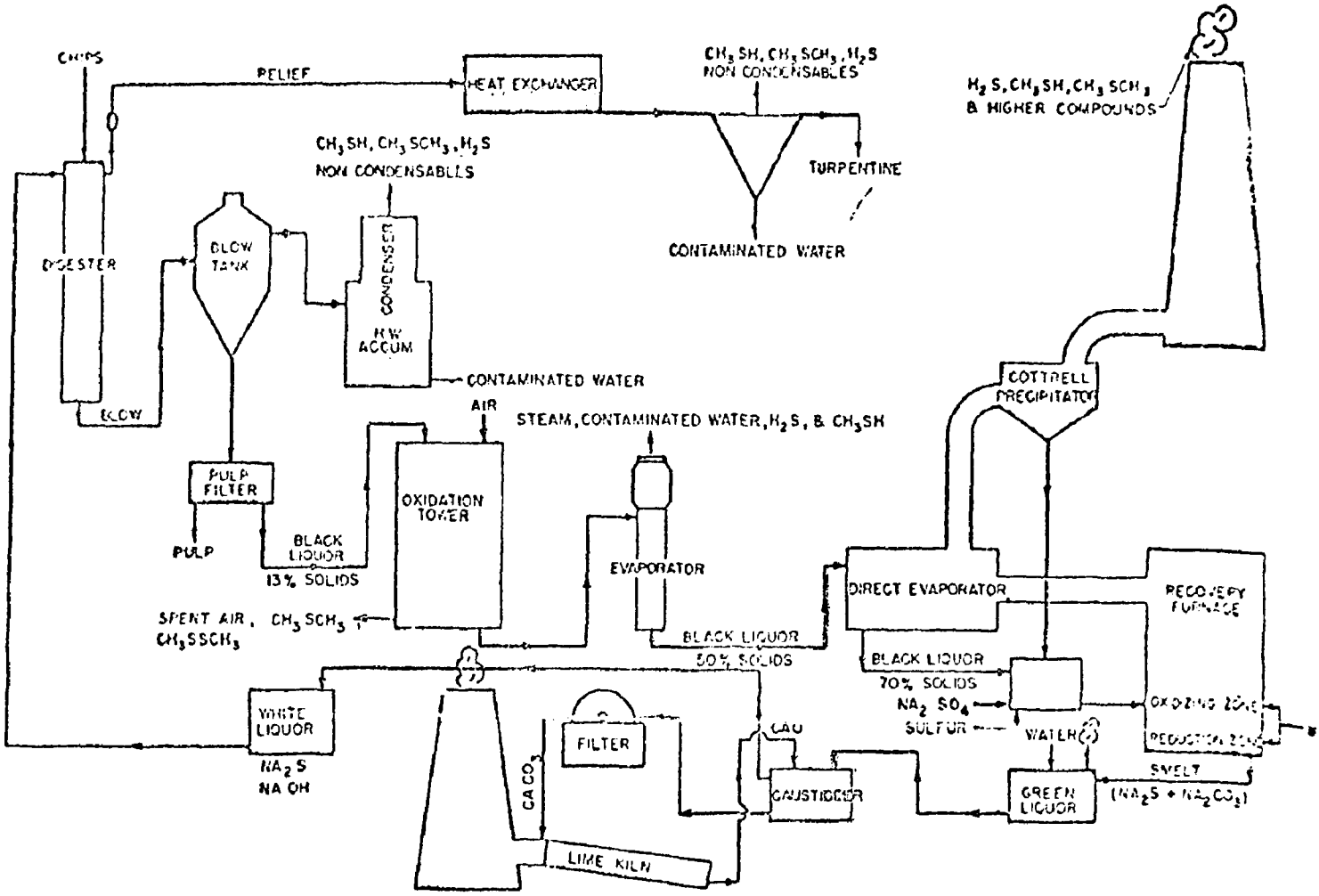

The spent black liquor from the blow tanks is concentrated to 50-60% solids by evaporation, and better results are realized by an oxidation of this black liquor before the first stage of evaporation. This reduces corrosion in the evaporators and decreases the loss of

sulfides in the gases by converting them to partially or completely oxidized compounds which are less volatile. It thereby conserves reagent sulfur, while decreasing the emission of sulfur-containing odorants into the atmosphere. The black liquor may be further concentrated in a direct contact evaporator, by heat exchange with the recovery furnace flue gases. Much lower emissions can be realized by replacing this direct contact evaporation with an indirect heat exchange system for the final concentration, which avoids re-evaporating odorants into the stack gases. Several designs of this type are available.

The concentrated black liquor is combustible because of its lignin content. This is burned in the recovery furnace under lean air conditions, so that the inorganic chemicals present are reduced to a melted mixture which is mainly sodium sulfide and sodium carbonate. This smelt is removed from the bottom of the furnace, dissolved to form a green liquor, and the carbonate is reconverted to sodium hydroxide by slaked lime in the causticizer tank. The spent mud from this tank is sent to a lime kiln, where it is burned to regenerate calcium oxide to complete the cycle.

3.1.3 Means of Sulfur Disposal

Sulfur containing gases collected from the digesters, blow tanks, evaporators and miscellaneous washers and filters throughout the plant are disposed of by burning in the lime kiln or the recovery furnace. The control of emissions by this means requires a careful adjustment of furnace loading and operating conditions to keep the system in balance. A summary of the principal emission sources to be controlled and typical analyses of their odorant composition is given in Table 2 (27).

3.1.4 Measurement of Odorants

The odor problems inherent in the kraft process were well recognized by its developers in 1891, and technical papers evaluating the problem began to appear around 1900 (26). Quantitative measurements of the amounts of mercaptan, methyl sulfide, and dimethyl disulfide emitted per ton of pulp were published as early as 1922 (28), and the picture as to what compounds are responsible has not changed since.

The early measurements of the amounts of these compounds were made by conventional chemical means (29), usually colorimetric reactions for H_2S and the formation of mercury salts from mercaptans (mercaptan = "mercurium captans"). The development of black liquor oxidation in Scandinavian mills, shortly after World War II (30), was a process for improving the economics of kraft pulping by reducing the emissions of sulfur odorants. It coincided with the development of the bromine coulometer as a rapid and convenient automatic instrument for measuring total reduced sulfur (18). This gave a strong incentive for the production of a commercial instrument to operate in the normal range of uncontrolled emissions, up to about 1000 ppm.

Table 2

Average and Range of Odorous Compounds in Various Kraft Mill Emissions (27)

(PPM by Volume)

Odorant	Digester Blow Gases		Multiple Effect Evaporators		Contact Evaporator		Recovery Furnace (Dissolver Unit)		Filter Washer		Lime Kiln. Emissions	
	Av.	Range	Av.	Range	Av.	Range	Av.	Range	Av.	Range	Av.	Range
Hydrogen Sulfide	80	10-200	9000	3000-30,000	<10	<10	<5	0- 5	10	--	48	0-100
Methyl Mercaptan	4400	1300-8700	100,000	50,000-300,000	45	33-60	3	0-6	10	2-28	2	0-3
Dimethyl Sulfide	5100	2300-7000	4000	500-6000	18	15-40	1	0-5	14	3-52	1	0-1
Dimethyl Disulfide	1100	600-2200	5000	--	35	20-100	0	0	0	0	0	0
Acetone	350	100-600	--	--	60	40-100	--	--	3	2-4		
Methanol	1100	500-2400	110	50-160	1000	600-2500	--	--	20	5-38		
Alpha-pinene	1350	950-2200	960	300-1800	30	3-45	--	--	6	1-15		
SO_2							<20	0-20			<10	0-10
Gas Flow during tests	170 CFM at 60°F		10 CFM at 60°F		6,500 CFM at 60°F		20,700 CFM at 60°F		40,600 CFM at 100°F		21,800 CFM at 160°F	

The Barton Titrator has been used widely as a process tool, to follow the course of plant design and operating changes made to reduce the amount of sulfur lost as emissions. Initial models were improved to provide multiple ranges in a single instrument, from ambient through stack emissions (16). The most serious problems encountered in the field have been related to difficulties in sampling the gas stream which is hot, wet, and dirty. Methods to handle this difficulty have been developed by many workers (7), but the problem has not been completely solved.

Apart from sampling problems, one disadvantage of the Barton has been its inability to distinguish directly between any of the major odorants present. This directed attention to gas chromatography and physical sensors to go with it, to avoid the use of tedious and time-consuming chemical filtration systems for preliminary separation.

3.1.5 Requirements for Monitoring

Experience has shown that the complete analysis for individual compounds and the changes in their concentration as a result of process controls is primarily a problem for laboratory research. Once these determinations have been made and suitably confirmed, there is no advantage in making a complete analysis for routine monitoring. The number of such compounds which need to be measured is limited to a few key components, whose changes are enough to indicate satisfactory or unsatisfactory operations in the system or source concerned.

Present indications are that the distinction between H_2S, total reduced S and SO_2 gives useful data for the control of kraft mill emissions, and that this may be enough information for routine monitoring.

3.2 Petroleum Refining/Petrochemical Operations

3.2.1 Sulfur Odorants Present

Hydrogen sulfide and mercaptans are the major sulfur-containing odorants in oil refinery emissions. Some of the H_2S comes from crude oil, and more of it is formed from other sulfur compounds during the refining process. Alkyl mercaptans are present in crude oil in a wide range of molecular weights, with relatively larger amounts of the lighter compounds which have more noticeable odors.

The alkyl mercaptans are readily decomposed to split out H_2S by thermal cracking or catalytic treatment. This type of processing is usually preferred in modern oil refining to the older processes of chemically or catalytically converting the mercaptans to the corresponding dialkyl sulfides or disulfides, which are less odorous. Sweetening processes which double the molecular weight of the original sulfide are still used in the deodorization of fuel oils, but they are no longer preferred methods in the treatment of lighter distillates, partly because they decrease the yield of product in the original boiling range.

Aromatic mercaptans such as phenyl mercaptan are also present. They are mostly formed by catalytic processes such as catalytic cracking, where they may result from the ring-splitting of polycyclic S-containing compounds such as benzothiophene. The amount of these aromatic mercaptans produced is directly related to the ring sulfur content of the crude.

3.2.2 Sources of Emissions

Hydrogen sulfide comes from three major sources in a modern refinery. A schematic processing plan is shown in Figure 4. H_2S in the original crude oil comes overhead with the wet gas from primary crude distillation. Minor amounts are also released into the air space of crude storage tanks (not shown), which can be vented to a gas collection system to avoid odorous emissions. The second major source is the dilute H_2S-containing wet gas produced by a variety of thermal treatments which include catalytic cracking, catalytic reforming, and thermal or fluid bed coking. The wet gas from all of these sources, rich in light hydrocarbons, is combined and sent to a gas plant for recovery. The gas in this plant is scrubbed with a suitable solution, such as an ethanolamine, to remove H_2S and the low molecular weight mercaptans present. The desulfurized gas and light hydrocarbons produced are available as finished products or they may be used as fuel and as raw materials for further refining or petrochemical processes. The third major source is a rich stream of H_2S in hydrogen, ranging from about 15 to 70 mol %, produced by treating middle distillate fractions with a limited amount of hydrogen for sulfur removal (31).

Figure 4

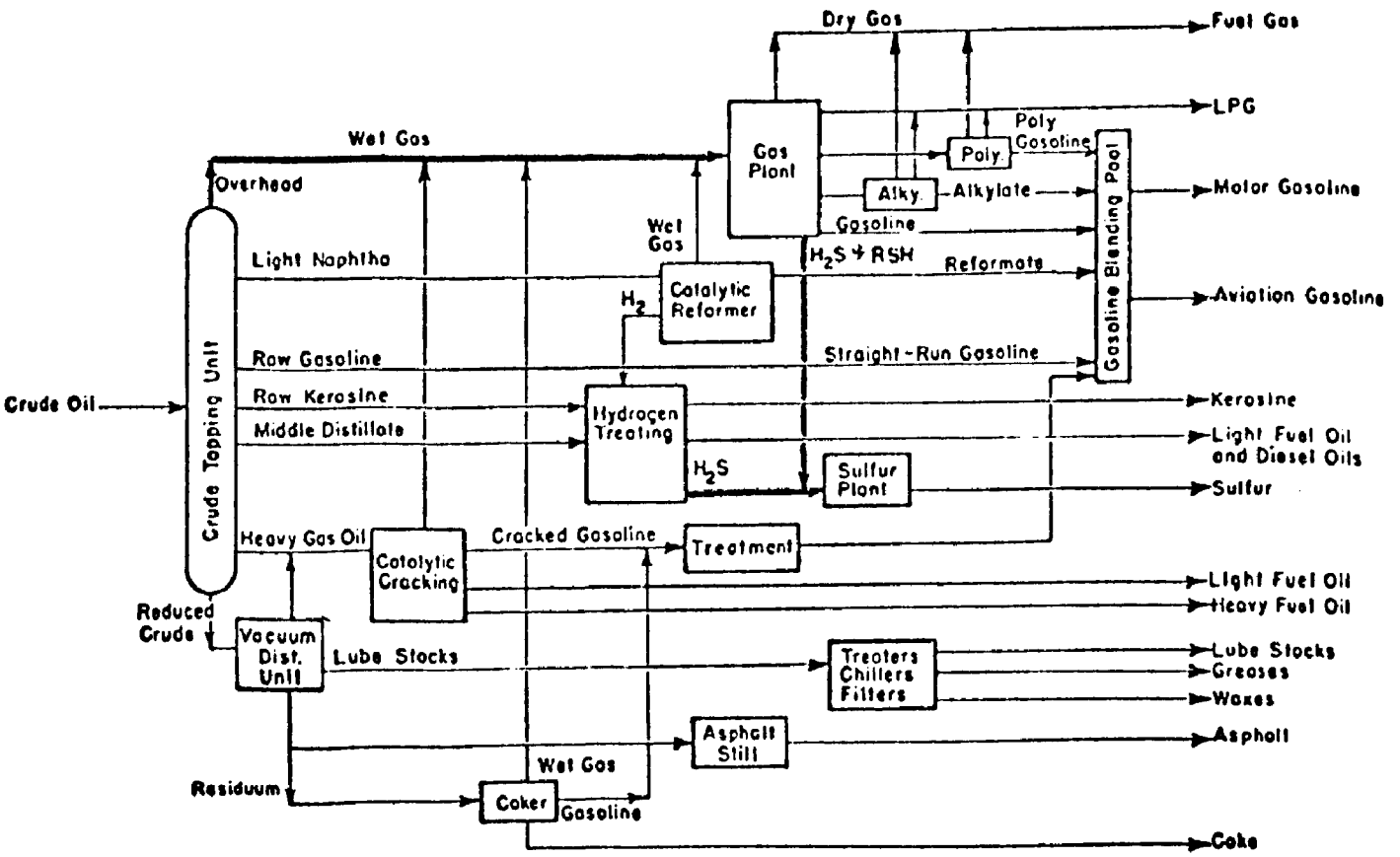

A listing of points recognized as potential sources of specific emissions in the refinery is given in Table 4 (32).

Table 4

Potential Sources of
Specific Malodorous Emissions

Emission	Refinery Sources
Hydrogen Sulfide	Untreated gas stream leaks, vapor from crude oil and raw distillates, process condensate sewers; traces in treated gas streams.
Mercaptans	Cracking units, caustic regeneration units, some asphalt plants.
Organic Sulfides	Movement and storage of the acid solutions used in scrubbing organic sulfides and mixed sulfur-nitrogen bases, if they are present, from straight run or cracked distillates or lubricating oil fractions.
Sulfur Dioxide	Combustion of fuels containing sulfur, flares, catalytic cracking unit regenerators, treating units, decoking operations.

3.2.3 Petrochemical Operations

Petrochemical operations are based mainly on the chemical reactions of olefins, aromatics, or other light hydrocarbons derived from petroleum. These reactions are frequently sensitive to very small amounts of sulfur compounds in the feed stocks. The processes used to desulfurize these chemical intermediates are essentially those shown in Figure 2, involving catalytic or thermal cracking, catalytic reforming, further hydrogen treatment if required, and an amine extraction of the product to remove the H_2S and mercaptans present. The odorants present and the measurement problems which they present are basically the same.

3.2.4 Means of Sulfur Disposal

The H_2S from hydrotreating and the H_2S/RSH concentrate from the gas plant are too rich in H_2S to be vented to the atmosphere as such. They may be burned to SO_2, which gets rid of the toxicity problem but creates an equal amount of SO_2 which is frequently undesirable. The preferred method which is becoming standard practice is to send all of this H_2S to a Claus process sulfur plant. A third of the H_2S is burned to SO_2, and the two gases are combined at a slightly elevated temperature to produce elemental sulfur:

$$2H_2S + SO_2 \longrightarrow 2H_2O + 3\ S^\circ$$

The small amounts of alkyl RSH present with this H_2S are ordinarily consumed in the sulfur plant. If they are present in unusually large amounts, however, they may be recovered from the amine extract in the gas plant by a simple distillation and re-refined to recover their hydrocarbon content.

The vent gas from the sulfur plant contains chiefly combustion gases, SO_2, carbonyl sulfide, carbon disulfide, and trace amounts of unconverted organic sulfides. A typical composition is shown in Table 3. This stream was originally vented to the atmosphere, after suitable dilution. It is usually incinerated first, which converts almost all of the remaining sulfides present to SO_2 and dilutes the whole with combustion air.

Table 3

Typical Tail Gas to and from Sulfur Plant Incinerator

	From Claus Plant to Incinerator, Vol. %	From Plant Incinerator, Vol. %
SO_2	3.0	1.2
COS	0.25	0.008
CS_2	0.25	$<$10 ppm
H_2S	200-1000 ppm	$<$10 ppm
CO	2.0	0.6
CO_2	13.0	3.2

The stack gas from the sulfur plant incinerator and the vent gas from the sulfur plant, if any, are thus the chief points of source emissions in a modern refinery. This system provides sulfur disposal for every collectable sulfur-containing gas in the refinery. A variety of means may be employed to dispose of collectable odorants outside of the sulfur plant, usually by burning or air oxidation (33).

Hydrogen sulfide and mercaptans may escape from process steam condensates, drain liquids from the various processes, barometric condenser pumps, sour volatile product tankage, and spent caustic solutions from treating operations. The malodorous components in steam condensates can be removed by stripping with air, flue gas or steam, and the malodorous gases burned in a furnace. Drain liquids can be routed to a closed

storage vessel and returned to the process. Barometric condensers are replaced by the more modern surface condensers; the non-condensables are burned in process heaters or in a separate incinerator. Spent caustic can be degasified, neutralized with flue gas or stripped before disposal. Sulfides can also be removed from sour process water and spent caustic solutions by air oxidation to thiosulfates and sulfates.

Another H_2S problem may be caused when suddenly large quantities of hydrogen sulfide must be burned in the flare. It is difficult to burn these large quantities completely to SO_2. The problem must be overcome by redressing the upset causing the increased H_2S production, usually by reducing the charge to the hydro desulfurizers. This situation can be minimized by suitably sizing the Claus sulfur plant to accomodate expected overloads. Concentrated organic sulfides are rendered harmless by conversion to H_2S in a hydro desulfurizer unit, or by combustion in a process heater.

3.2.5 Measurement of Sulfur Odorants

Analytical methods and procedures using wet chemistry for the determination of sulfur-containing streams in the refinery have been highly standardized. Referee methods formalized as ASTM Procedures by the American Society for Testing Materials have been adopted throughout the industry, and continuously annotated or revised to include the results of further experience and comparative testing between laboratories. The commercial use of sulfur specifications as a measure of product quality and relative market value between competing manufacturers has given the strongest incentive to the development of reliable methods.

The primary emphasis in these methods has been on the determination of sulfur in the products. The analytical range of interest for liquid fuels was originally in the percent range with stated limits of accuracy of the order of $\pm$ 0.1 for the Lamp Sulfur Method, which has been in use for over fifty years. Sensitivity has been continually improved, for the analysis of lighter fuels and gaseous hydrocarbon products, and for the upgrading of product quality to lower levels of sulfur content.

The old Lamp Sulfur Method ASTM D-90 oxidizes the sulfur in a liquid hydrocarbon sample to sulfur dioxide in a wick-fed flame, and gravimetrically determines its amount. The same principle of oxidation to SO_2 and measurement as such is applied to light liquid hydrocarbons and gases by burning in a pressure-fed flame (Wickbold, ASTM D-2785). Higher sensitivity for very low sulfur contents can be achieved by turbidimetric measurements after further oxidation and precipitation as $BaSO_4$. The general approach here is to oxidize all sulfur compounds present to SO_2, and measure this as an indication of sulfur content. When the material being analyzed is a hydrocarbon liquid or gas, there is no problem of interference from SO_2 in the original sample.

Analyses for SO_2 as such have been developed primarily for the monitoring of combustion stacks. The prior art and evaluation of instruments for this purpose have been covered elsewhere and are not the object of the present review. Particularly useful references include discussions by Palmer and Rodes (34), Tokiwa (35), and the current EPA Project EHSD 71-23.

The oxidation of all S compounds to SO_2 as a preliminary step to instrumental measurement was recommended by Thomas (36) using a conductimeteric method, titrating the acidity developed after absorbing the SO_2 in dilute hydrogen peroxide. The Thomas Autometer was used in industry but did not widely displace the standard wet chemical methods, partly because of problems in instrument maintenance. Preliminary oxidation to SO_2 has also been combined with the Dohrmann Microcoulometer, as a research tool for the measurement of very small samples. Analyses by this procedure have been made in the field, but it has not yet been developed sufficiently for routine use.

The comparable principle of converting all S compounds present to H_2S by catalytic hydrogenolysis and measurement as H_2S has also been applied to refinery products. This can be accomplished using a lead acetate tape recorder, as commercialized by Houston Atlas. It can also be done using the silver reductive microcoulometric cell offered for laboratory use by Dohrmann, based on developmental work by Burchfield(41).

The use of instrumental methods for sulfur determinations has been slow to displace wet chemistry in refinery product analyses. This is partly because the standard wet chemical methods have been so highly developed, in a market situation where the direct competition between manufacturers on product quality allows no leeway for the adoption of less reliable or accurate procedures. Another factor has been the problem of instrument maintenance, which is particularly important when there are relatively few measurements over a period of time. It must also be recognized that once the basic correlations between product quality and operating conditions of temperature, pressure, flow rate and feed composition have been established for a given process, by research measurements and pilot studies, very few complete analyses are required on any plant stream except the feed and final product. Research type measurements may be made once a year or once every few months, for a plant test to confirm previous correlations, but this amount of use does not justify automatic instrumentation.

Instrumentation for emissions control is a new emphasis, and automatic instrumentation for this purpose is just now being developed. An example is the exact control of the Claus process to give minimum sulfur emissions in the product gas. A general discussion of this system is given in EPA pulbication AP-42, "Control Techniques for Sulfur Oxide Pollutants." The critical point for analysis is the affect of variations in H_2S to SO_2 ratio on the maximum theoretical conversion to S in a given plant. The effect is illustrated in Figure 5. Optimum conversion is obtained at a mol ratio of exactly 2.0 and if this deviates by as much as 2.1 to 1.9, the maximum conversion obtainable decreases to an efficiency of 96.8 to 98.3% conversion. This corresponds to an analytical accuracy of $\pm$ 5% in the reported value. Monitors developed for this measurement include a non-dispersive UV, sensitive to both SO_2 and H_2S. While this difference in conversion level may have relatively little effect on the tonnage of sulfur produced, it is critical for the amount of unconverted material emitted from the plant.

Figure 5

Variation of H_2S to SO_2 Ratio with Conversion and Maximum Theoretical Conversion Possible at Specified Ratio

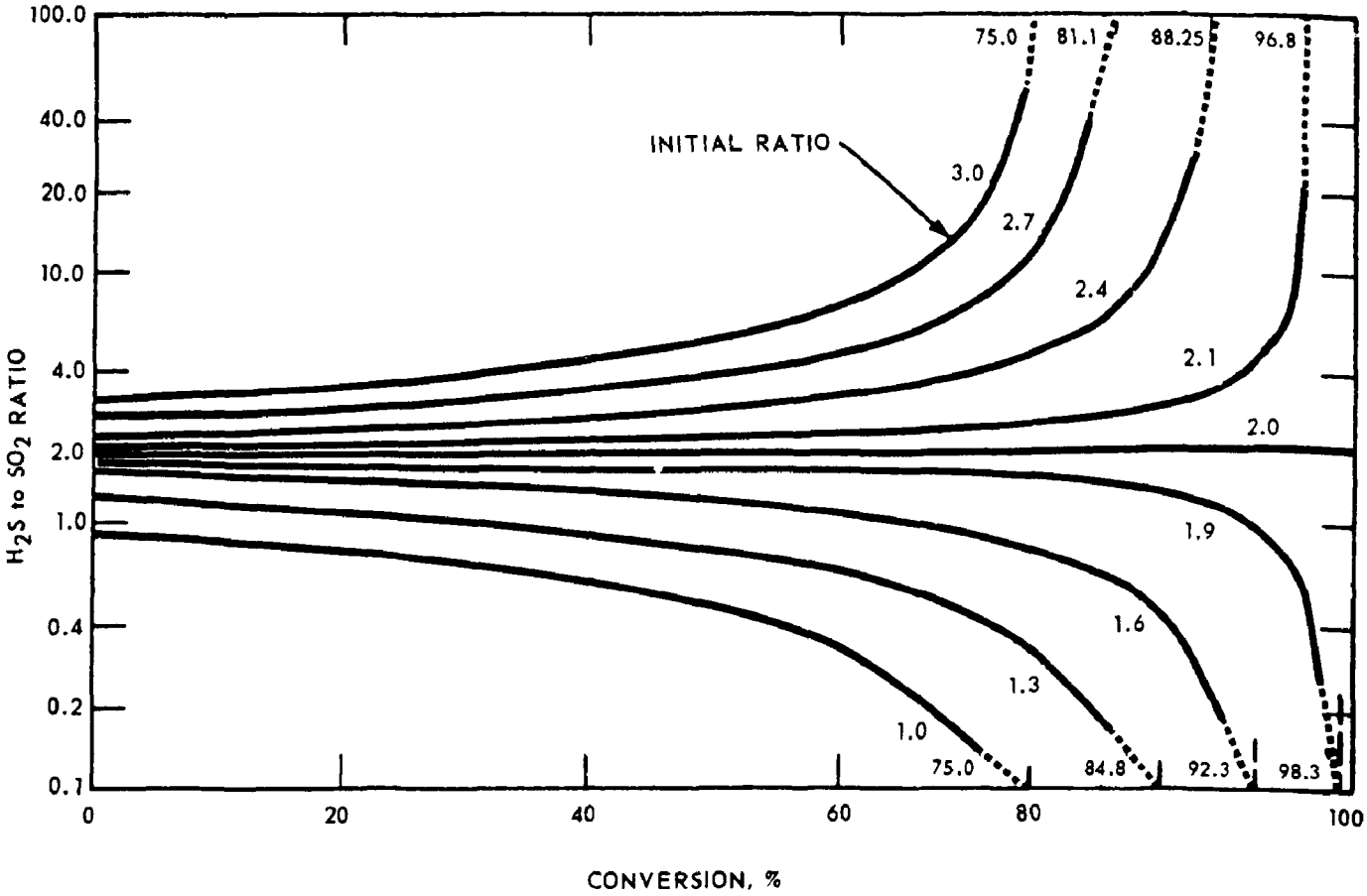

3.2.6 Instrumentation for Monitoring

The sulfur odorants produced and removed in oil refining come directly from the feed stock to the refinery. Unlike the Kraft pulping process which seeks to conserve sulfur, the H_2S and mercaptans produced in oil refining must be disposed of in production quantities. They are handled in the refinery as process streams at a relatively high concentration, in the percent range or higher, and in systems which are completely closed because of the toxic hazards involved at these concentrations.

Odorant controls operate by converting the sulfur compounds to odorless or less odorous forms, primarily elemental sulfur or SO_2, and to a limited extent to heavier sulfur compounds which can be tolerated in some other petroleum product.

Monitoring requirements are of two types: emission measurements on the principal stack gases, and ambient measurements to determine the cumulative effects of miscellaneous small leaks from odorous process streams. Emission measurements are of most interest for H_2S, since most other sulfides are now converted to H_2S as an intermediate step in their final disposal. Mercaptan emissions are more likely from diffuse sources, monitored by ambient measurements, than from the stack gases which are the major emission points.

3.3 Animal Waste Rendering Plants

3.3.1 Odorant Emissions

Odor emissions from animal waste rendering (AWR) plants are derived from the processing of inedible raw materials which are unsuitable for other use. The odors associated with these operations have long been recognized as a severe type of air pollution and one of the more frequent causes of public complaint, but they have been most difficult to measure or quantify. Recent research studies combining odor panels with physical separations and the chemical or spectroscopic identification of constituents have been able to identify specific malodorous compounds and types of compounds as present in AWR emissions, but the data obtained by this technique are only qualitative or semi-quantitative at best. Instruments to measure the compounds identified are only in the conceptual stage or just now being developed. Parts of this problem in odor measurement and instrumentation therefor have thus been solved, but no total system for this purpose has been set up and tested.

The odorants released in animal waste rendering are normal products of animal metabolism and the concentrations of these materials detectable by smell are extremely low, of the order of parts per billion or even less. This has been beyond the instrumental range and in some cases it is still marginal at best. Concentrations at the source will be correspondingly higher, in the range of parts per million.

The relationship between source concentrations and those detectable at a distance from the plant are by no means linear, however, for different compound types. The reasons for this are only partly known. Aldehydes, for example, are relatively easily peroxidized in air to form the physiologically reactive peracids, and the concentration of these might remain constant or even increase with time and distance from the source. It is entirely possible, although not yet fully established, that it is this or some similar mechanism which explains why aldehydes are considered among the most persistent odorous compounds emitted.

3.3.2 The Sources of Emission

The animal rendering process consists of reducing animal tissue from inedible meat, bone scrap, fish and poultry wastes to solids, fats and water. The products produced are tallow, grease, fertilizer and animal feed. Whole blood may also be processed to give solid blood meal which is also valuable as a fertilizer and in the manufacture of glue.

A typical continuous rendering process such as that shown in Figure 6 consists of a receiving area for the animal wastes, which are conveyed to a cooker where water is removed, followed by additional cooking to remove tallow, other liquids and gases, drying, pressing of the solids

Figure 6

Schematic Diagram of a Continuous Rendering Process

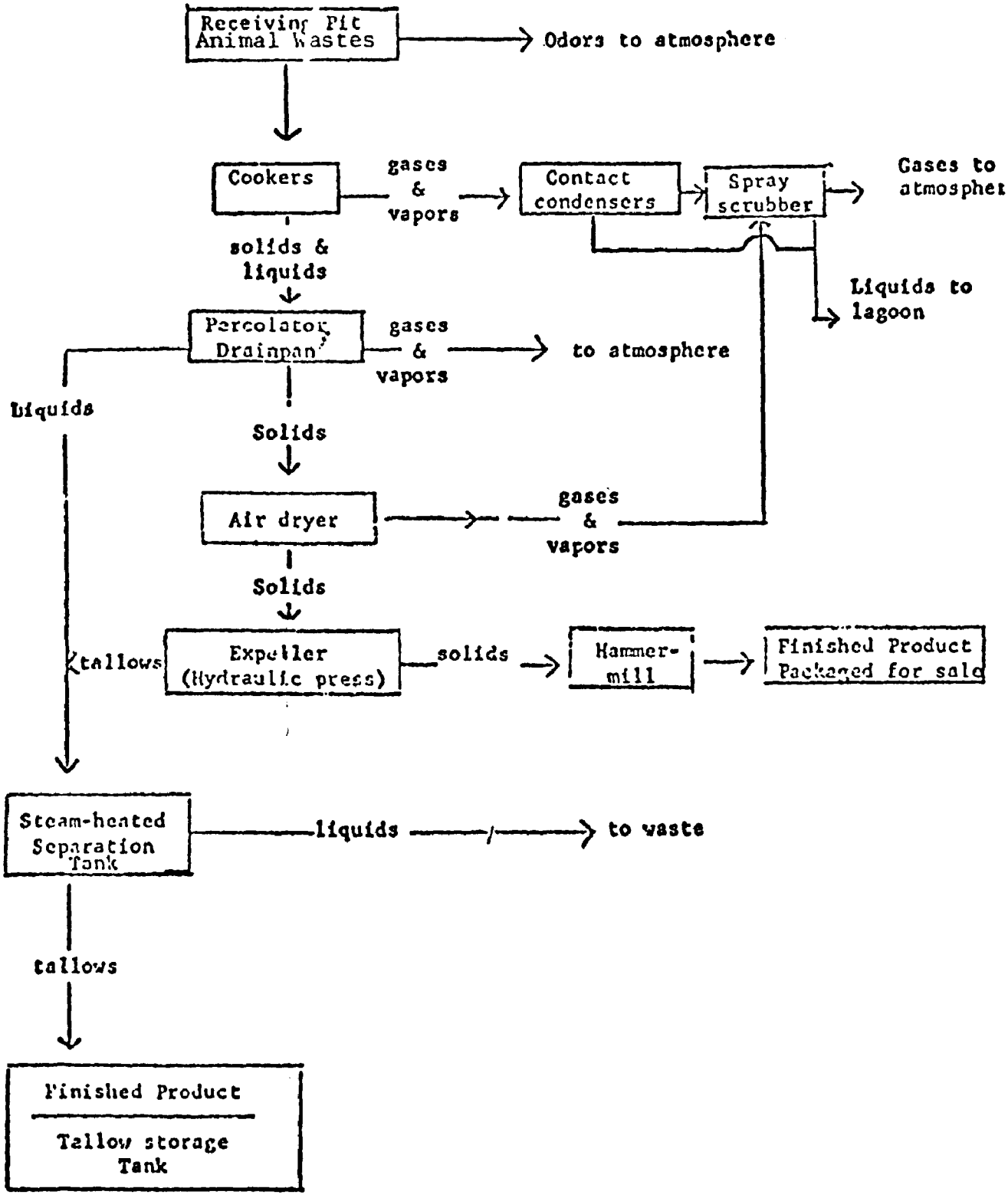

and grinding of the solids to form a finished product. Gases and vapor from the cooker are condensed in a contact condenser. If an air dryer is used, the vented drying air is passed first through a spray scrubber before being vented to the atmosphere. The odorous effluent from such a plant will consist mainly of vented gases and odoriferous liquids.

There are two main sources of odorants in animal rendering plants and these are discussed briefly below:

1. Raw materials in transit and in storage: This source can emit powerful odorants due to the natural and bacterial decomposition of tissue beginning with the death of the animal. Such odors increase rapidly in intensity with time. To minimize such odors, the handling time of the animal material is usually kept to a minimum; however, it is sometimes difficult to avoid putrefaction and enzymatic decomposition of these materials. A variety of odorant materials may be formed in these biological processes including hydrogen sulfide, volatile amines such as methyl and ethyl amines, putrescine, cadaverine, and skatole.

2. Odors arising from processing equipment: The equipment involved consists mostly of boilers, dryers, blood spray dryers, crackling bins, rendering kettles, mixers, holding tanks, storage tanks, incinerators, and catch basins. The cooking process is the main part of the rendering operation in which the proteinaceous material is decomposed at a temperature exceeding 200°F. The effluent from the cooking process contains mostly steam driven from the animal tissue, along with considerable amount of many odorous compounds such as amines, fatty acids, aldehydes, etc. The gases from the cooker are usually condensed (95% condensable) and the remaining odorous uncondensable gases are vented to the atmosphere or passed through an afterburner. In some plants, an air dryer is used to further concentrate the solids, and the large volumes of air used and emitted can then add to the odor problem. Typical levels of air are 10,000 CFM per dryer. Attempts to clean up the exhaust air by condensation or water scrubbing do not appreciably reduce the amount of odorants contained in this air. Most plants do not incinerate the dryer gas effluent.

Odor emissions from typical rendering plants have been identified as to their sources and types of compounds. Odor concentrations and emission rates have been determined by several workers (37,38), and are summarized in Table 4. It is evident from these data that there are wide variations in odorants produced from similar equipment. It may be noted there are also some differences in the types of compounds emitted, e.g., the mercaptans and sulfides are found mainly in the processing of feathers.

Table 4

Odorants and Concentrations Emitted from Rendering Plants

Operations	Source of Air Pollution	Compound Classes	Odor Concentration Odor Units/SCF(1) Range	Odor Concentration Odor Units/SCF(1) Typical Average	Exhaust Products, SCF/Ton of Feed	Odor Emission Rate Odor Unit/Ton of Feed
Dry Cooking	Noncondensibles in vapor Vapor leaks from cooker Dumping of hot fats	Amines Aldehydes Fats Fatty Acids	5000 to 500,000	50,000	20,000	1000×10^6
Blood Cooking	Noncondensibles in vapor Vapor leaks from cooker	Same as above	10,000 to 1 million	100,000	38,000	3800×10^6
Feather Cooking & Drier	Product dumping Product drying Loading docks	Aldehydes Amines Mercaptans Sulfides Fatty Acids Fats	600 to 25,000	2,000	77,000	153×10^6

(1) Odor Unit = No. of volumes of odor free air required to dilute one volume of odorous air to the minimum identifiable odor (MIO) level.

$$\text{Odor Unit} = \frac{\text{Odor Free Air Volume}}{\text{MIO}}$$

This is a somewhat oversimplified tabulation of the compounds released from rendering plants, and actually the odorant materials are an extremely complex mixture of organic compounds containing both odorous and nonodorous components; however, many of the odorous compounds are obnoxious even at very low concentrations.

Many efforts have been made over the years to identify the odorous components in animal tissue as well as those emitted from rendering plants. Ronald (39) identified H_2S, NH_3, di- and triethylamine, and CO_2 in the condensate from dry rendering of flesh by wet chemical methods prior to the advent of GC techniques. Chromatographic techniques were used in 1957 by Wood and Bender (40) to identify components extracted from ox muscle. These workers separated the protein from the extract and identified 27 different materials by paper chromatography. Most recent work has concentrated on the identification of components by a variety of gas chromatographic techniques. Studies at the IIT Research Institute (60) have shown that decomposition of meat samples in the laboratory closely approximates the odorant materials emitted from rendering plants. A number of the organic components released have been identified by GC and mass spectroscopy and characterized by odor, in addition to determining their odor threshold level. The Kovats Index System was used to characterize their GC behavior. Table 5 summarizes the major components identified and indicates the odor threshold level and other pertinent information. The materials identified in Table 5 are the more volatile emissions from rendering plants and these are believed to be the most important in determining odor. A number of other less volatile materials have been separated and many of them have been identified by similar analyses. These latter compounds consist mainly of higher alcohols, aldehydes and acids; however, it is anticipated that these heavier materials will make a smaller intrinsic contribution to odor emissions, and that they would generally be trapped in the various condensers and scrubbing systems in the plant.

3.3.3 Methods of Measurement

As indicated in the above review, the volatile aldehydes and organic acids appear to be major components in most AWR odorant emissions. In plants where feathers, fish or decomposed materials are processed, amines, mercaptans and H_2S may make a significant contribution to odorant emissions. For these latter compounds, automated analytical techniques developed for the Kraft Mill or petroleum industries may be used. However, there are no instruments available for automated measurement of aldehydes or organic acids and these need to be developed.

Table 5

Characterization and Identification of Major Odor Compounds Commonly Found in Rendering Plant Emissions (60)

Kovats Index	Concentration Range (Expressed in Peak Area % from GC Analysis)	Odor Note	Identity	Odor Threshold ng/cc
889	0.34 - 23.60	Aldehydic	n-Butanal	2,000
925	0.22 - 36.62	Rancid	3-Methyl Propanal	--
969	0.01 - 2.21	Butter	2,3 Butanedione	--
989	1.19 - 55.19	Aldehydic	n-Pentanal	3,000
1046	0.06 - 2.32	Butter	Probably 2,3-Pentanedione	--
1078	1.41 - 46.00	Aldehydic	n-Hexanal	--

A wide variety of analytical research methods have been used to determine the nature and composition of AWR odorant emissions. At present, odor panels are the most widely used means of measuring these objectionable odorants in the field. Generally, analytical techniques are applied to odorous materials after they have been separated and concentrated from the ambient air. Wet chemical methods, instrumental methods and combinations of these techniques have been used and are summarized below.

3.3.3.1 Odor Panels

While odor panels are used mainly to determine whether there is an objectionable odor, they may also be used to determine qualitative and semi-quantitative concentrations of odorants in the atmosphere. Trained odor panels can detect certain specific types of odorants and may also determine threshhold levels of odor with surprising accuracy. Examples of the usefulness of odor panels in this regard have been given by Hemeon (42). This technique and others described by Sullivan (43) are generally based on a dilution technique in which the original sample is diluted until it can just be detected by the human evaluator. This vapor dilution technique can be a static method, a continuous method, or a volatilization technique. A number of instruments have been developed to assist in using these techniques, for both laboratory and field evaluation. The odor panel approach is excluded by definition in the present review.

3.3.3.2 Wet Chemical Methods

Aldehydes in air may be determined directly by a number of colorimetric techniques and titration methods which are suitable for automated wet chemistry. These are generally for rather specific and usually low molecular weight aldehydes, and with a number of these methods, ketones also interfere. Methods which have been used are given below:

1. MBTH (3-methyl-2-benzothiazolonehydrazone) solution in sulfuric acid produces a blue cationic dye that can be measured at 628 mμ (44). The sensitivity of this method is 2 ppb.

2. A modified Schiff procedure using rosaniline and dichloro sulfitomercurate may be used for low molecular weight aldehydes with a reported sensitivity of .01 ppm (48)

3. $NaHSO_3$ is used as a standard method (48) for the determination of low molecular weight aldehydes. The bisulfite solution is adjusted to a pH of 9.6 $\pm$ 1 with Na_2SO_3 or acetic acid as required which decomposes the bisulfite ion equivalent to the aldehydes present in the sample. The liberated bisulfite is then titrated with standard iodine. The sensitivity of this method is about 1 ppm, and interfering compounds are methyl ketones.

4. Formaldehyde may be determined using chromotropic acid or the modified Schiff method and both give a sensitivity of about .01 ppm. Polarographic methods have also been evaluated but need further study (44).

5. Acrolein forms a specific color compound with 4-hexylresorcinol in ethanoltrichloroacetic acid solution to yield a blue color product which can be measured spectrophotometrically at 605 mμ. The sensitivity of this method is about .005 ppm (44).

Several methods have been developed for the direct determination of organic acids which are . : generally applicable to acetic acid and other specific low molecular weight organic acids. In one of these methods, the acid is collected in a dilute solution of NaOH (5%) in an ice bath (48). The acid is then liberated with concentrated H_2SO_4 to a pH of 2 to 3 and extracted by refluxing with ether for 8 hours. The resultant extract is then titrated with .1N NaOH. A second method is a color indicator method based on Fleisher methyl purple which has been developed by Miller and co-workers (47). This is a sensitive method of detecting acetic acids using a collection medium composed of 1:1 glycerol:water solution containing a small amount of Dow Corning Antifoam A. This solution, containing the indicator, is adjusted to a pH of about 6 and a color change from Kelly green to purple occurs over a pH of about 1. Thus, by measuring the volume of air required to change this color, it is possible to calculate the concentration of acetic acid in air directly.

A method for the determination of ammonia and ammonium compounds has been developed by California workers (48) for use where their concentration is generally very low. A series of impingers containing water and 5% HCl solution cooled with an ice bath is used for collections of the nitrogen compounds. The solutions are then analyzed by either the Kjeldahl method, or for more sensitive determinations, by the Nessler color test method.

3.3.3.3 Instrument Methods

A few instrumental methods have been used for the direct analysis of odorous materials including AWR emissions, but a preliminary separation is usually required. Gas chromatographic techniques have proven to be well suited for separation prior to the analysis of complex mixed odorants. Such separations have been combined with various types of detection equipment to differentiate and identify in detail the major components of effluent gases. A brief review of methods used and their suitability for analysis of rendering plant emissions follows:

3.3.3.4 Spectroscopy

UV spectrophotometers are useful mainly for analysis of aromatic compounds and since these are not indicated to be of major importance in rendering plant emissions, these techniques may not be appropriate for direct analysis. However, UV may be useful for the determination of aromatic derivatives of odorant compounds, such as the DNPH derivatives of aldehydes, either as a group or as individual compounds.

Infrared spectrometers have been used for both qualitative and quantitative analysis of odorous emissions. IR techniques are often used to complement the mass spectrometer, since the latter can differentiate accurately between homologous series and structural isomers, but it cannot distinguish geometrical isomers and identify functional groups, which is often required. This latter capability is readily attainable with IR spectrometers. Trieff and co-workers (58) tried to determine aldehyde concentrations and other organics from rendering plant emissions directly using the IR Spectrophotometer. However, they found that the concentration of gases was too low to be detected directly by this instrument. Many colorimetric methods are available to identify aldehydes as a group, and also specific aldehydes and these may be separately determined using IR detectors. A good summary of the capability of such methods is shown in Table 6 from the work of Stahl (44).

The mass spectrometer is a powerful analytical tool which can give a positive identification of many different types of compounds. However, this instrument cannot analyze complex mixtures. Thus, odorous materials, such as emissions from rendering plants, must be separated into fairly simple mixtures of components before being subjected to analysis on a mass spectrometer. This instrument is also very big and expensive and is thus most suitable for research studies. An entirely new principle which may be useful with polar compounds including many odorants is "drift mass spectroscopy." This is a laboratory development in which an ion (H^+) is reacted with the molecules and a detector then measures the shift of the protonated species in an electric field.

In view of the requirements of the mass spectrometer, it is best used in combination with some separation technique such as a chemical separation by compound type or a GC separation technique.

3.3.3.5 Gas Chromatography

Many workers have evaluated the use of GC columns with and without additional detectors for the analysis of odorant materials in air (45, 46). Several detailed studies have also been made on odorants from rendering plants. These techniques have been outlined briefly below with comments on their limitations.

Table 6

SUMMARY OF QUALITATIVE COLORIMETRIC DETERMINATION METHODS

Reagent	Color	Limits of Identification in Micrograms		
		Aldehydes	Formaldehyde	Acrolein
Indole	Orange to red	~0.05-1	0.2	
Fuchsin (Schiff method)	Violet to blue	~1-30	1	
4-Phenylazo-phenyl-hydrazine sulfonic acid	Red to blue	0.2-0.4	0.25	0.2
2-Hydrazino-benzothiazole + p-nitrobenzenediazonium fluoborate	Blue to green	0.2-200	0.2	0.3
2-Hydrazino-benzothiazole (HBT)	Blue	0.01-3.0	0.01	
3-Methyl-2-benzothiazolone hydrazone (MBTH)	Blue	0.1-80	0.1	
(J-acid) 6-amino-1-naphthol-3-sulfonic acid	Blue	0.01-11	0.03	

The advantages of gas chromatography for the detection of odorants in the atmosphere was recognized in 1958 (49), and subsequent experiments by Williams identified fifty-eight atmospheric pollutants by this procedure (50). His list of compounds identified includes most of those found in AWR emissions. Williams used a short stainless steel column containing Chromosorb P partially deactivated with di-ni-butyl-phthalate cooled to -80°C to collect the samples. The gas was then desorbed from the column, dried, and injected into a Perkin-Elmer Model 154-D gas chromatograph fitted with flame ionization and electron capture detectors. Williams also tested a specially treated molecular sieve column heated to 150°C, or one containing sulfuric acid on an inert substrate, as a means of further separating air pollutants before analysis on the GC columns. Using various combinations of drying agents, sulfuric acid, and molecular sieves, he was able to separate and identify hydrocarbons, aldehydes, alcohols, organic acids, sulfides, disulfides, organic nitro compounds, nitriles, thiols, ketones, and halogenated compounds in the atmospheric samples tested.

Low molecular weight aldehydes have been studied in industrial effluents by Levaggi and Feldstein (51) and in automotive exhaust by Prater (52). Levaggi employed a Varian 1200 gas chromatography with a hydrogen flame detector and a stainless steel column packed with 15% Carbowax 20M on Chromosorb, followed by a 5" x 1/8" stainless steel column containing UCON-dinonylphthalate on fire brick. This equipment enabled them to detect C_2 and higher aldehydes. Prater suggested the use of GC equipment with a dual flame ionization detector and an OD-17 column for analysis of the aldehydes collected in 2,4-DNPH. Using this equipment, he was able to detect aldehydes from formaldehyde up to paratolualdehyde in concentrations ranging from .03 to 5 ppm.

Several workers have used dual column GC techniques on air pollutants and found they were not sensitive enough to identify all the odorant materials which could be detected by human sensors. A study of air pollution from animal wastes by Burnett (53) used a Varian Aerograph Model 1520B equipped with dual flame ionization detectors. He was able to identify 8 or 9 compounds with good certainty but some odorous materials detected by human evaluators did not show up as peaks on the GC plots. Analysis of odorant materials in the atmosphere by Okita (54) identified a number of amines, mercaptans and organic sulfides, but even with the use of the GC with flame ionization detectors, he found the equipment was not sensitive enough and he felt there was a need for electron capture and electroconductivity detectors.

Dravnieks (55) has shown that routine GC techniques with two stage detectors are sensitive enough to detect nanogram (10^{-9} gm) amounts of individual substances. This amounts to 6×10^{12} molecules for a typical compound having a molecular weight of 100. Assuming that the limit of detection of odorous materials is in the range of 10^9 molecules per cubic centimeter of air, it is only necessary to concentrate the odorant materials in air by a factor of 6,000. Such a concentration factor is readily obtainable using organics to absorb vapors, when the temperature is changed from

ambient to about 200-250°C. Dravnieks has identified discriminators which can be applied in gas chromatography for polar and non-polar separations in animal-source materials. These include optically active dipeptides for the dispersion of optical isomers, cobalt stearate for the strong dispersion of primary and secondary amines by complex formation, sorbitol or diglycerol for the hydrogen bonding of polar groups, and Emulphor 0 for the dispersion of polar functional groups or double bonds with respect to paraffinic hydrocarbons.

The complexity of odorant emissions from rendering plants and other sources has led researchers to methods of further discriminating the peaks obtained using GC columns and various detection techniques. One of the most widely used research techniques for the comparative indexing of unknowns is the Kovats Index System (56). This technique combined with a split column GC provided with a so-called "sniff port" has been used by Dravnieks and Trieff (57, 58 respectively). Using these combined techniques it is possible to detect specific compounds as well as odorant types and relate the peaks noted from the GC analysis to odor panel response.

The most complete qualitative analysis which has been conducted to date on rendering plant emissions combines GC techniques with mass spectrometry (59). This involves either single or double column GC equipment with the effluent then being put through a mass spectrometer. Using these techniques, Dravnieks, Burgwald (59, 60) and co-workers have been able to identify a number of compounds by chemical type. In this work, it was necessary to identify knowns by similar techniques and relate them to the unknown emissions from the rendering plant. An indication or positive identification of 30 different compounds was obtained. Such techniques, involving the mass spectrometer, are excellent for detailed identification of components but are not practical for control purposes.

Use of simpler GC columns and the detection equipment discussed above shows promise for identifying specific odorant compounds or types from rendering plant emissions and other odorants in the atmosphere. Such a type analysis may be satisfactory for monitoring purposes, where the odorant originates from a fairly uniform source. It must be recognized, however, that in the general case a type measurement for total aldehydes, for example, or total organic sulfur compounds, does not necessarily relate to the concentrations of the individual compounds present as principal odorants.

4. SPECIFIC INSTRUMENTATION FOR S ODORANTS

This section contains brief summaries of the characteristics of specific types of instruments which are considered as applicable to the field measurement of sulfur compounds (and other odorants), and literature sources for additional information. It is divided into three sections; 1) preferred commercial instruments, which can measure several (or all) types of sulfur odorants; 2) alternate instruments, commercially available, which can measure at least H_2S, the principal S odorant; and 3) potential instrumental approaches, which need to be developed further before they can be properly evaluated. The capabilities of the instruments described can be summarized briefly as follows:

4.1	Preferred Commerical	H_2S + RSH (and others)
4.2	Commercial Alternate	H_2S (and others)
4.3	Potential	R/D required

Information regarding the individual techniques discussed in each of these sections is organized into a brief review of the operating principle, commercially available equipment for this specific use, bibliographic references (for operating principle, applications, data on uses or comparisons, and specific instrument descriptions), stated advantages and disadvantages, and conclusions or recommendations. The statements of advantage and disadvantages listed are taken from the literature, with some editing, for the purpose of this interim report. It must be recognized that such statements are subject to change on evaluation, and not always mutually consistent.

Pertinent extracts of the manufacturer's operating, maintenance or application manuals are appended for the commercially available instruments in Section 4.1, to include statements of operating performance. The originals of these manuals should be consulted for details.

This section of the interim report is a guide to source material to be used in Contract 68-02-0219, for the "Evaluation of Measurement Methods and Instrumentation for Adorous Compounds in Stationary Sources." It is intended as a survey and not as a definitive review. The reader who is interested in critical reviews of various portions of the background informatio available will find numerous publications of interest. Good analytical reviews which cover the literature in detail on specific topics in the measurement of odorous (sulfur) compounds have been published in 1943 by Thomas (36), in 1952 by Bialkowsky (146), in 1963 by Kenline (26), in 1967 by Walther (91), in 1968 by Blosser (7), Thoen (8), Adams (9), and Leithe (147), in 1970 by Hendrickson (6), Tokiwa (35), and Stevens (73), and in 1971 by Dravnieks(59) and Austin (62).

COULOMETRIC TITRATION (SO_2, H_2S, Mercaptans, Halogens and Nitrogen Compounds)

Principle of Operation

Four different types of coulometric (amperometric) units are available namely bromine, iodine, silver and hydrogen cells. While the principles are similar in each case, the chemistry and methods of analysis are somewhat different for each type, as discussed below. The hydrogen cell is not widely used in the industries of concern, and is not discussed here in detail.

Bromine Cells (For SO_2, H_2S, Mercaptans)

A constant level of free bromine is generated by electrolysis from a solution of KBr. Reaction with SO_2 decreases the free halogen present and is detected by bromine sensors which signal the electrolysis current to increase. The additional current required to maintain the original bromine level is proportional to the SO_2 concentration according to the following reactions:

$$H_2O + SO_2 \longrightarrow SO_3^{=} + 2H^+$$

$$H_2O + Br_2 + SO_3^{=} \longrightarrow SO_4^{=} + 2Br^- + 2H^+$$

$$2Br^- - 2e \longrightarrow Br_2$$

Bromine units respond to SO_2, H_2S, mercaptans (35) and all oxidizable organic sulfides. If desired, H_2S and other reduced sulfides can be removed by passing the inlet gas over a heated (120°C) silver gauge, leaving SO_2 to be measured alone, or SO_2 can be scrubbed out leaving only the sulfides.

Iodine Cells (SO_2, H_2S and Mercaptans)

A constant level of free iodine is generated by electrolysis from a solution of KI or NaI. Reaction with oxidizable sulfur compounds reduces the amount of free iodine present. This reduction is detected by polarizing electrodes. The titrant I_3^- consumed is proportional to the sulfur content of the sample as shown by the following reactions. All sulfur compounds in the sample are first oxidized in a combustion tube, and swept into the titration cell.

$$I_3^- + SO_2 + H_2O \longrightarrow SO_3 + 3I^- + 2H^+$$

$$3I^- \longrightarrow I_3^- + 2e$$

Sodium azide (NaN_3) is generally added to the iodide electrolyte solution to minimize possible interference from chlorine and nitrogen containing compounds in the sample stream.

Silver Cell (H_2S, Mercaptans and Chlorine)

The concentration of silver ions is kept constant by electrolysis from a solution of silver iodide. Sulfide or chloride present in the sample reacts with the silver ions which are coulometrically replaced. The total current required to replace the silver ions is a measure of the sulfur or chloride present in the injected sample. Since this cell reacts only with reduced sulfur and/or chloride the unit can be used to measure reduced sulfur alone.

If oxidized compounds are present, total sulfur can be determined by a preliminary pyrolysis in a reducing atmosphere to convert all sulfur compounds to H_2S. In this mode the hydrogen used in the reduction reaction is humidified, to reduce coke formation and the formation of small amounts of cyanide from any nitrogen compounds in the sample. To stabilize the cell reaction, the electrolyte is saturated with a gas mixture of 10% NH_3 in nitrogen.

This cell can also be operated to measure reduced sulfur and chloride independently. To accomplish this a titration endpoint or "bias" potential is chosen for S determination such that the chlorides will not consume silver ions. For determination of chloride a higher "bias" potential is used. Under these conditions neither material interferes with the other in desired analysis.

Commercial Manufacturers

The Barton Titrator is a continuous-flow bromine microcoulometer which can accept samples for direct measurement of H_2S and TRS at emission level concentrations. It is widely used in the pulp and paper industry. The Philip SO_2 Monitor can be used for continuous measurements of H_2S and RSH (but not other sulfides) at ambient concentrations. Commercial Dohrmann microcoulometers are available as either bromine, iodine, or silver ion cells. They are primarily research laboratory tools, for the measurement of small discrete samples such as the fractions produced by gas chromatography.

Suppliers of such instruments are as follows:

Bromine Cells

ITT Barton	Models 286 and 400
Dohrmann	Models C-200 + 250B
Philips Electronic	Model PW 9700

Iodine Cells

Atlas Electric Devices	Model L 1202
Beckman Inst. Co.	Model 906
Dohrmann	Cell T-300-P

Silver Cell

Dohrmann	Cell T-400-S
Hartmann + Braun A.G., Frankfurt-am-Main, GFR.	Picoflux

References

Barton Model 286

1. Principle of Operation: 61, 62, 63, 8, 64, 65, 35, 66, 67
2. Applications: 61, 62, 63, 8, 64, 65, 68, 66, 67, 69
3. Data: 61, 62, 63, 8, 64, 65, 66, 67, 69
4. Specific Instrument Description: 61, 62, 63, 8, 65, 66, 67

Bromine Cells

1. Principle of Operation: 70, 71, 72, 73, 35, 22, 74, 75, 66, 76, 77, 78
2. Applications: 70, 71, 72, 73, 22, 74, 75, 66, 76, 77, 78, 79
3. Data: 70, 71, 72, 73, 22, 74, 75, 66, 76, 77, 78
4. Specific Instrument Description: 70, 71, 72, 22, 75, 66

Iodine Cells

1. Principle of Operation: 71, 35, 75, 66, 18
2. Applications: 71, 75, 66, 18
3. Specific Instrument Description: 71, 75, 66, 18

Silver Cells

1. Principle of Operation: 80
2. Applications: 80
3. Data: 80
4. Specific Instrument Description: 80

Discussion

Advantages

Barton Model 286

1. Reliable with a minimum of maintenance (weekly).

2. Gives rapid, continuous, direct measurement for SO_2.

3. Sensitivity to SO_2 in the range of 0.05 to 1.0 ppm (64) ranges from ± 0.05 to ± 0.24 ppm respectively.

4. Sensitivity to H_2S and mercaptans is 0.02 ppm (64).

5. Well suited for long sample lines with monitor at a distance from the source.

Others (Dohrmann, Philips)

1. Good sensitivity to H_2S (10 ppb) and SO_2 (50 ppb): (Dohrmann, 22) (2 ppb) and (4 ppb): (Philips)

2. Rapid response time.

3. Relatively trouble free: Philips has internal (automatic) zero and calibration.

4. Accurate.

5. Interference from other gases in the ambient air generally minor.

6. Applicable to both liquid and gases (Dohrmann).

7. Suitable for determination of oxidized and reduced sulfur compounds and compounds containing chlorine and nitrogen at levels ranging from 0.1 ppm to several percent.

Disadvantages

Barton Model 286

1. Minimum sensitivity 30 ppb (H_2S) (66).

2. When H_2S conc. in gas is above 100 ppm over extended periods, some elemental sulfur is deposited and may cause a sluggish response (62).

3. Chlorine compounds interfere.

Others

1. Dohrmann requires daily calibration by skilled technicians, sensitive to temperature changes.

2. Iodometric cells do not respond to organic sulfides or disulfides.

3. Reducing compounds such as O_3, unsaturated compounds and NO_2 interfere in the iodometric cells, however, these may be removed with appropriate absorbers (35).

4. Philips has limited range above ambient levels.

Conclusions

The Barton titrator is well suited for automatic monitoring of SO_2, H_2S, and total reduced sulfides over a fairly wide range of concentrations. Interfering compounds can generally be eliminated. Maintenance problems which can be troublesome in the field are due largely to the difficulties involved in providing a suitable sample stream.

Other coulometric titrators generally are just as sensitive as the Barton and the technique can be adapted to monitoring a variety of compounds including sulfides, chloride, phosphorous and nitrogen compounds. One of the major drawbacks with the microcoulometer is the frequent (daily) calibration required, and the high degree of technical skills needed to get optimum results.

Recommendations

Evaluate the Barton instrument at plant sites for monitoring of refinery as well as kraft mill emissions.

Evaluate the microcoulometer further as a possible referee method.

BARTON

Model 400 Titrator

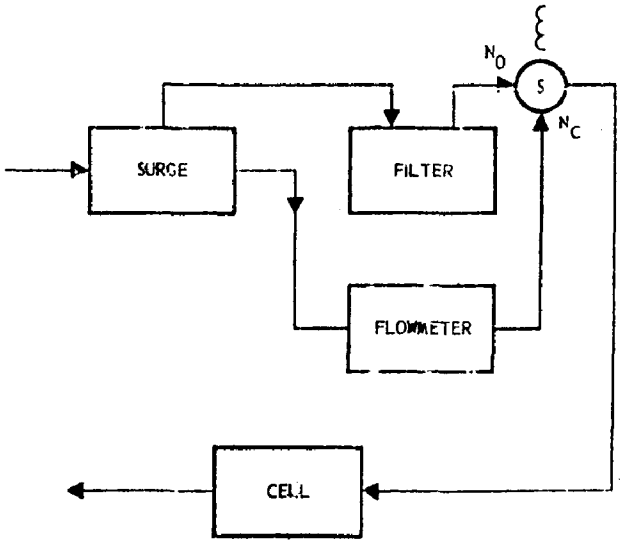

Flow Diagram

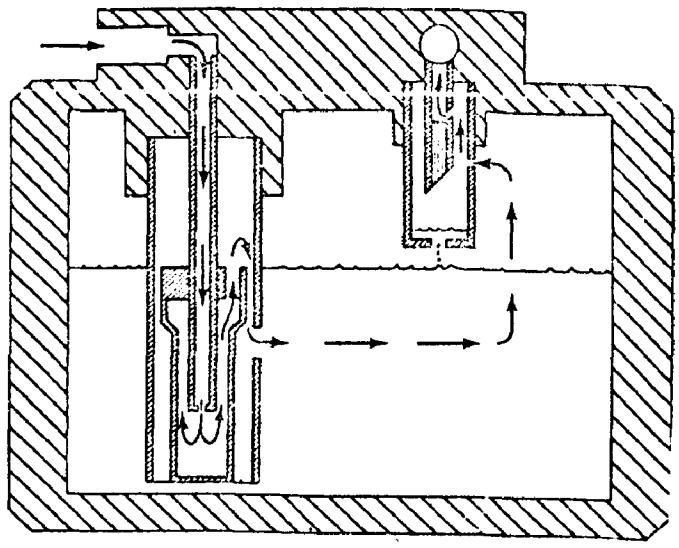

Titration Cell

General Specifications

Sensitivity
- Hydrogen Sulfide ..... 0.02 ppm
- Mercaptans ..... 0.02 ppm
- Organic Sulfides ..... 0.05 ppm
- Sulfur Dioxide ..... 0.05 ppm

Range ..... 0-1000 H_2S ppm (7 ranges)

Model 400 Outputs ... 0-100 ua, 0-10 mv or 0-100 mv

Function Controls ..... On, Off, Total Sulfur, Total Minus SO_2, and Automatic Cycling

Power ..... 115 v z-c, 60 Hz, less than 45 watts

Power Connection ..... 6-feet, 3-conductor cable, 3-prong plug

Sample Flow Rate ..... 200-600 ml per minu (250 ml nominal recommende

Inlet Connections ..... ¼-inch tubing fittir

Outlet Connections ..... ¼-inch tubing fittir

Titration Module
- Height ..... 10 inch
- Width ..... 9 inch
- Depth ..... 22 inch

Recording Controller Module
- Height ..... 14½ inch
- Width ..... 8⅞ inch
- Depth ..... 13⅛ inch

DOHRMANN MICROCOULOMETER

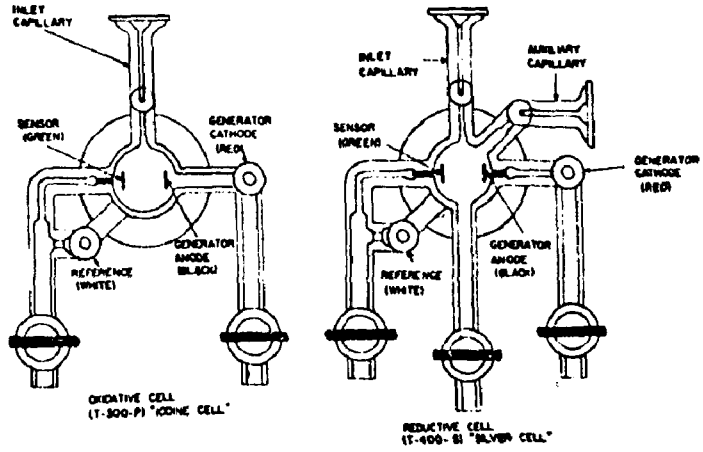

Figure 3. Comparison of titration cells

Oxidative cell

(T-300-P) Iodine cell
Electrolyte:
0.05% potassium iodide
0.50% acetic acid
0.06% sodium azide
Sensor: Pt°
Reference:
Pt°—Triiodide Saturated
Anode: Pt°
Cathode: Pt°
Bias Voltage: 160 mV
Titration:
$2I^\circ + SO_2 + H_2O \rightarrow SO_3 + 2I^- + 2H^+$
Generation: $2I^- \rightarrow 2I^\circ + 2e^-$

Reductive cell

(T-400-S) Silver cell
Electrolyte:
0.3*M* ammonium hydroxide
0.1*M* sodium acetate

Sensor: Ag°
Reference:
Hg°/HgO Saturated
Anode: Ag°
Cathode: Pt°
Bias Voltage: 110 mV
Titration:
$2Ag^+ + S^{2-} \rightarrow Ag_2S$

Generation:
$Ag^\circ \rightarrow Ag^+ + e^-$
Auxiliary gas flow:
10% NH_3 in N_2 at 40 cc/min

Oxidative cell
Iodine cell

Dohrmann
Application Note MC301

5.3 Standardization

5.3.1 Not all of the sulfur in the samples comes through the furnace as titratable SO_2. In the strongly oxidative conditions of the pyrolysis tube, some of the sulfur is also converted to SO_3 which does not react with the titrant. Accordingly, system recovery should be verified every four hours (more often in critical applications) by using the standards supplied with the MCTS-30 System or in the CEM-30 Chemical Kit. System recovery is typically 85% ± 10%.

7 RANGE AND PRECISION

T' following specifications are based upon an injected sample volume of 5 - 8 µl at concentrations greater than 2 ım and 30 - 40 µl at concentrations of 2 ppm or less. The amount of analyte per injection should not exceed 10,0(ng and the sample injection rate should not exceed 1 µl/sec.

The following precision data is typical:

C ppm	PRECISION (± ppm)	RELATIVE PRECISION (± %)
0.1	0.05	50.0
0.5	0.07	14.0
1.0	0.10	10.0
10.0	0.50	5.0
100.0	3.20	3.2
500 and greater	–	3.0

Reductive cell
Silver cell

Application Note MC401

5.3 Standardization

5.3.1 System recovery should be verified every four hours (more often in critical applications) by using the standards supplied with the MCTS-40 System or in the CEM-40 Chemical Kit. System recovery is typically 100% ± 5%.

7 RANGE AND PRECISION

The following specifications are based upon an injected sample volume of 5 - 8 µl. The amount of analyte per injection should not exceed 10,000 ng and the sample injection rate should not exceed 0.2 µl/sec. The following precision data is typical:

C ppm	PRECISION (± ppm)	RELATIVE PRECISION (± %)
1	0.5	50.0
10	0.8	8.0
100	3.5	3.5
500 and greater	–	3.0

Above 10,000 ng of sulfur (eg. 1 µl of 10,000 ppm S) titration time becomes excessive which in turn degrades precision. Concentrations greater than 10,000 ppm can be measured by diluting the sample with a suitable solvent. D 'utions of up to 1000/1 will not significantly degrade the precision specifications cited above. Dilutions to the 100 ppm level provides a good compromise between analysis speed and precision as well as ease of sample handling.

8 ACCURACY

System recovery is 100% ± 5% when the analyte concentration is calculated from instrumental data using Faraday's Law. System accuracy will be equal to the sum of system precision and recovery. Accuracy can be significantly improved when sample values are compared to those obtained with analyte standards. Accuracy cannot be better than precision, however.

DESCRIPTION OF BLOCK DIAGRAM

The air is introduced through the sampler unit comprising two filters. The air is then lead through a selectivity filter to the measuring cell. The measuring cell contains an aqueous solution of KBr; Br_2 and H_2SO_4. The SO_2 in the air reacts with free bromine in this measuring solution. The bromine concentration is converted into a redox potential which is compared with a constant voltage.
The difference between both voltages controls a current through two generating electrodes via an amplifier. When the bromine concentration is decreased from a certain value, this system regenerates bromine. This coulometric titration controls the bromine concentration in the measuring solution at a constant level.

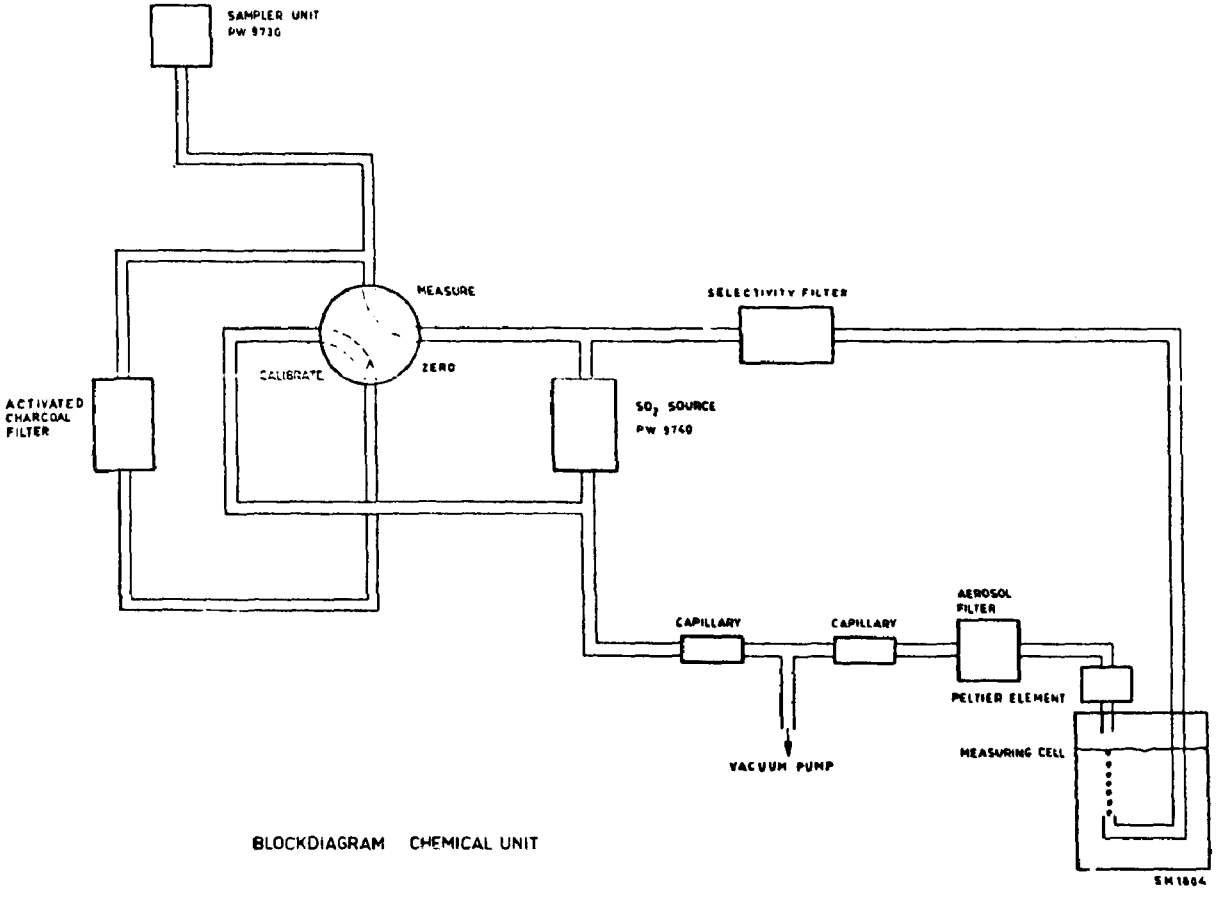

Fig. 2.1 Block diagram SO_2 monitor (chemical part)

The current required to maintain this constant balance is directly proportional to the quantity of bromine used and consequently to the quantity of SO_2 lead through the measuring cell.
As a result of evaporation, some bromine will leave the cell, thus causing a small zero current. Parts have been built into the monitor for measuring the size of this zero current automatically. A resistance is fitted in series with the generating electrodes. This resistor converts the generating current into the input voltage of the output amplifier.

2. Measuring range

3 mg/m^3 SO_2 (1.15 ppm SO_2/m^3 air).

Other measuring ranges between 1.5 mg/m^3 and 10 mg/m^3 can be realised.

In measuring ranges below 0 - 1,5 mg/m^3 the calibration signal falls out of scale.

0-20 mA into a resistance of 0-300 Ω.

3. Response time

Approx. 1½ minutes (63 % of final value)

Approx. 3 minutes (95 % of final value).

4. Accuracy (overall, absolute)

Better than 15 % of the measuring signal. Better than 26 μg/m^3 SO_2 (=0,01 ppm) if the SO_2 concentrations are smaller than 183 μg/m^3 (= 0,07 ppm).

Provided calibration is performed once a day, for instance.

5. Reproducibility

Better than 1 % of the measuring signal.

6. Detection limit

Smaller than 10 μg/m^3 SO_2 (4 p.p.b.)

7. Size of zero current

Corresponding to a measuring signal smaller than 100 μg/m^3 SO_2

8. Drift of the zero signal

Smaller than 26 μg/m^3 SO_2 (=0,01 ppm) a day, non cumulative.

9. Influence of 10 % mains voltage variation

Negligible.

10. Climatological influence

Negligible.

11. Selectivity

The interference (I_x), due to a substance X, is expressed by the relation $I_x = \left|\frac{S_x}{S}\right| \times 100$ %, in which S_x = measuring signal due to 0,05 ppm of substance X and S = measuring signal due to 0,05 ppm SO_2.

X	Selectivity
NO_2	< 5 %
O_3	< 1 %
H_2S	< 1 %
Methyl-mercaptan	≈ 180 %
Ethylene	< 2 %
Cl_2	< 2 %
NO	< 1 %
Aldehydes	< 1 %
Benzene, chloroform	< 1 %
CS_2	< 1 %

GAS CHROMATOGRAPHY + VARIOUS DETECTORS (SO_2, H_2S, RSH, R_2S, RSSR)

Gas samples may be separated in a chromatographic column and the eluted components identified by a variety of detection methods. The volatile sample is transported through the chromatographic column by an inert gas (N_2, He, A, etc.) and separated by preferential adsorption on a finely dispersed column packing. The adsorbed materials are then removed with an inert gas and the various components, which desorb at different rates, may be separately identified and measured as they issue in the carrier gas.

Many different types of column packing materials have been evaluated (95, 81, 71, 94, 86, 10, 74, 75, 96, 87, 97, 98, 89, 90) but two appear most promising for the separation of sulfur compounds: Triton X-305 coated on Chromosorb (99) and (100) polyphenylether coated on finely devided Teflon (101). For the separation of amines, aldehydes, ketones, alcohols and mixtures of these components, two GC columns in series containing Chromosorb 102 coated with Emulphor O in the first column and, either sorbitol or diglycerol is the second column, were found to be efficient by Dravnieks (69).

Following separation of the test sample into its individual components or simpler mixtures by GC, these materials may then be identified by a variety of detector techniques, such as those listed below.

Colorimetric
(Micro) Coulometric (M)CD
Electron Capture (EC)
Flame Ionization (FID)
Flame Photometric (FPD)
Infrared Spectroscopy
Thermal Conductivity (TCD)
Ultraviolet Spectroscopy

Most of the above techniques are discussed elsewhere in this report and only the FPD, FID, TC and EC detectors will be covered here. FPD is a preferred method, highly sensitive and specific for sulfur in any volatile form. FID responds to any organic sulfide, but not to SO_2 or H_2S. Thermal conductivity and electron capture are older methods, less sensitive to sulfur and of limited use at present.

Commercial Equipment

Gas chromatographic columns, packings, coating agents for various packings and detectors are available from a wide variety of suppliers and a complete listing of all is beyond the scope of this report. Commercial units combining GC/FPD which should be suitable for use in kraft pulp mills or petroleum refineries are offered by Bendix, Tracor, and Varian Aerograph. While these components are also available for monitoring specific odorants in emissions from animal waste rendering or other sources, no combinations have been offered or recommended as a package unit for this purpose.

References

GC + FPD

1. Principle of Operation: 81, 82, 73, 83, 74, 66
2. Applications: 81, 82, 73, 83, 74, 84, 85
3. Data: 81, 82, 73, 83, 74, 85
4. Specific Instrument Descriptions: 81, 82, 73, 83, 74, 84

GC + (M)CD

1. Principle of Operation: 61, 71, 17, 86, 22, 75, 74, 84
2. Applications: 61, 71, 17, 86, 64, 22, 75, 74, 84, 90
3. Data: 61, 71, 17, 86, 74, 75, 90
4. Specific Instrument Descriptions: 61, 71, 17, 86, 74, 75, 84, 90

GC + TCD

1. Principle of Operation: 17, 74, 91
2. Applications: 17, 64, 74, 91
3. Data: 17, 74, 91
4. Specific Instrument Descriptions: 17, 74

GC + FID

1. Principle of Operation: 17, 86, 22, 74
2. Applications: 17, 86, 64, 22, 92, 74, 75, 93
3. Data: 17, 86, 64, 22, 74
4. Specific Instrument Descriptions: 17, 86, 74

GC + EC

1. Principle of Operation: 74
2. Applications: 74, 93
3. Data: 74
4. Specific Instrument Descriptions: 74

Discussion

Advantage

GC + FPD

1. Capable of detecting S compounds at 2 ppb level (81).

2. Can detect a wide variety of S compounds such as SO_2, H_2S C_1-C_3SH, and higher molecular weight sulfides + disulfides (82).

3. Shows potential for use in monitoring (73, 84).

4. Interference from non-sulfur compounds is small (83), except for carbon oxides or hydrocarbons at concentrations greatly in excess of total sulfur.

GC + (M)CD

1. Best combination found for kraft pulp mill emissions, but not completely satisfactory (22).

2. Minimum detection level of 0.05 ppm SO_2 and 0.02 ppm H_2S (75).

3. Equal of similar in sensitivity to GC + EPD (61).

GC + TCD

1. Sensitive to SO_2, H_2S and mercaptans.

GC + FID

1. Method for carbon number analysis in any homologous series.

2. Might be useful at high concentrations for S compounds (74).

3. Combined with a S detector it can be very useful and has high sensitivity for hydrocarbons.

GC + EC

1. Good sensitivity to compounds containing one or more functional groups.

2. Can serve as a complementary system with GC + FID.

Disadvantages

GC + FPD

1. Massive amounts of CO, CO_2 or hydrocarbon interfere.

GC + MCD

1. Dohrmann type iodine cell not suitable for routine process analysis (22).

2. Requires standardization of the coulometric cell for each type of compound eluted (22).

GC + TCD

1. Sensitivity for the detection of H_2S and CH_3SH about 500 ppm which is not suitable for direct analyses of process gases (74, 91).

GC + FID

1. Not suitable for sulfur compound in the presence of hydrocarbons since they are obscured by S free compounds, and the response does not follow the "carbon number" rule as with aliphatic hydrocarbons (94, 86, 22).

GC + EC

1. Not suitable for sulfur compounds.

2. Small sample capacity limits usefulness (36) because of interference caused by O_2 (74).

3. Not sensitive to hydrocarbons.

Conclusions

GC instruments combined with an appropriate detector are extremely sensitive and discriminating. Such combinations may be used for all known gas mixtures, to identify most individual compounds or to identify compounds by type analysis. The most versatile combinations for the kraft and petroleum industries are:

1. GC plus flame photometric detectors (FPD).
2. GC plus microcoulometric detectors (M)CD.

The other techniques have some serious drawbacks.

Recommendations

Continue evaluation of GC + FPD and GC + MCD systems for monitoring emissions from kraft and petroleum industries. Need to evaluate present initial production instruments for commercial use.

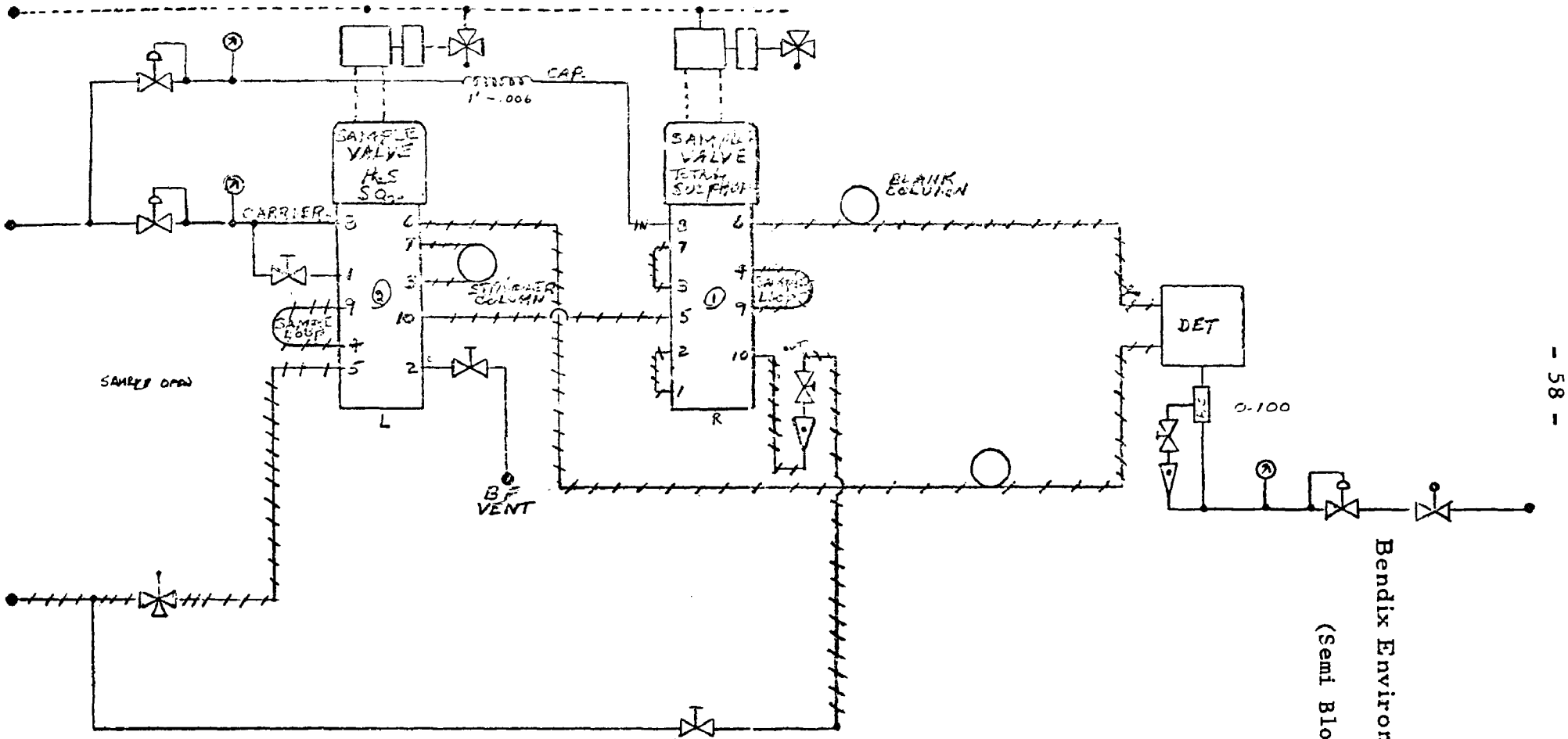

Bendix Environmental Chromatograph

(Semi Block Diagram)

The Bendix Environmental Chromatograph will meet or surpass the following specifications if properly maintained and the specified operating parameters are adhered to.

- Ranges: 0.02 to 0-20 ppm on continuously adjustable attenuator
- Precision: ±4% of full scale
- Minimum Detectable Limit: less than .005 ppm H_2S and 0.01 ppm SO_2
- Noise Level: 0.5% of full scale
- Zero Drift: Less than ±1% per day and 2% per three days with automatic zero before each component.
- Span Drift: Less than ±1% per day and 2% per three days
- Interference Equivalent: Less than 0.01 ppm
- Electrometer: Linearized electrometer corrects the signal to provide output directly proportional to sulfur concentration
- Linearity: Less than 2% of full scale
- Oven Temperature: Controlled to 0.5°C
- Cycle Time: Five minutes
- Operational Period: More than three days unattended
- Output Signal: Trend outputs of 0-10 volts or 1-5, 4-20 or 10-50 madc for each component
- Readout: Chromatogram, bargraph and trend
- Power: 115V 60 hz

TAPE SAMPLERS (H_2S)

Principle of Operation

The reaction of water soluble compounds of heavy metals such as $Pb(Ac)_2$, $HgCl_2$ or $Cd(OH)_2$ etc. with H_2S results in an insoluble sulfide precipitate:

$$Pb(Ac)_2 + H_2S \longrightarrow PbS + 2HAc$$

$$Cd(OH)_2 + H_2S \longrightarrow CdS + 2H_2O$$

Filter paper on other appropriate material may be impregnated with $Pb(Ac)_2$ or $Cd(OH)_2$ and air drawn through the paper will cause a response to sulfide compounds. Mercaptans may or may not react. Such papers may be supplied as a tape for continuous monitoring of sulfide in air.

A number of schemes have been devised to automate tape samplers and various means are available for determination of the concentration level. One of the simplest methods is to read the color intensity or amount of precipitate developed with some sort of spot evaluator (102). Other methods involve dissolving the precipitate formed on the tape with reagents such as NH_4OH and measuring the intensity of the brown color developed colorimetrically (102, 103). The sulfide may also be dissovled and measured colorimetrically by the methylene blue method (104). In each of these cases the sulfide concentration observed is correlated with a standard H_2S curve.

Modifications have been made by various researchers and equipment suppliers to overcome the inherent problems such as light sensitivity, humidity control, and variations in tape response. The limits of detection range from 0.5 to 100 ppb. Lead acetate detectors have a lower limit of about 50-60ppb, $Cd(OH)_2$ about 1-3 ppb and the $HgCl_2$ type unit is sensitive to 0.5 ppb.

Commercial Equipment

No instrument is available which gives a direct output or linear readout proportional to sulfide concentration. Lead acetate tape samplers according to several different principles are available.

Houston Atlas 825: continuous readout of exposed trace on moving tape.

Houston Atlas 855: catalytically hydrogenates all sulfides to H_2S, fed to tape sampler.

RAC 5000: cumulative spot analysis on 5 minute cycle (or multiples), each spot pre-corrected for tape zero.

Bendix Monocolor (Maihak): continuous readout on moving tape, zeroed against light absorbance of unexposed tape.

Simplified samplers are also available for use in field stations with provision for separate tape readout in a control laboratory. Calibration curves are generally provided with each instrument, but these have been found to be inaccurate by a number of investigators.

References

1. Principle of Operation: 88, 66, 105, 103, 104, 106, 101
2. Applications: 88, 66, 105
3. Data: 88, 66, 105
4. Specific Instrument Description: 88, 66, 105

Discussion

Advantages

1. Low cost.
2. Simple operation and maintenance.
3. $Cd(OH)_2$ and $HgCl_2$ detectors sensitive to very low concentrations.
4. No interference with CH_3SH, at H_2S to CH_3SH ratios greater than 1.0.

Disadvantages

1. Lead sulfide impregnated tape sensitive to light and fades with time, other materials such as $Cd(OH)_2$ and $HgCl_2$ more stable.
2. Lead sulfide not accurate at concentrations below 50 ppb.
3. Need to control humidity of gas stream.
4. Ozone and SO_2 cause fading of lead acetate tapes.

Conclusions

Tape samplers good for detection of H_2S in air above 50 ppb provided adequate precautions are taken to control humidity of gas and to minimize fading problems.

Recommendations

Further development needed to fully automate the system and improve accuracy.

TAPE SAMPLERS

Monocolor MC 1001 Maihak AG, Hamburg. (147)

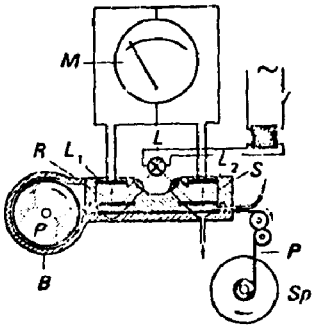

S sample cell;
R reference cell;
L lamp;
L_1 photocell 1;
L_2 photocell 2;
P paper tape impregnated with reagent;
B box for paper tape;
Sp spool head for paper tape;
M indicating device.

The instrument operates according to the following principle: A paper tape impregnated with the reagent (e.g., lead acetate for H_2S) is successively drawn through two cells. One of these, the reference cell, is filled with pure air, while the air sample passing over the paper is blown into the sample cell. Both cells, which are symmetrically arranged are illuminated by a common lamp. The light reflected from both tape surfaces is respectively measured by two photocells. The current difference corresponds to the blackening of the paper caused by the foreign matter in the air sample (e.g., H_2S). The tape feed rate is 1 mm/min; since the diameter of the sample cell is 12 mm, the paper is illuminated 12 min and a mean value over this period is measured. The throughput rate of the sample gas (e.g., 100 ml/min) can be adjusted by means of control valves and measured. The lowest measurement range for H_2S is 0–14 ppm.

A similar instrument, the AISI Automatic Smoke Sampler (Research Appliance Co., Pittsburgh, USA), can also be used for determining H_2S when a paper impregnated with lead acetate is inserted.

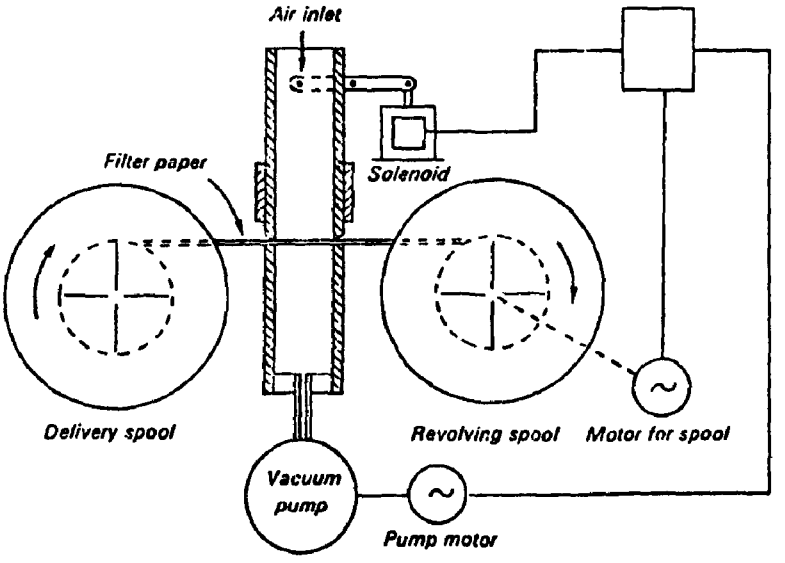

Stated accuracy ± 15% FS at 0.4 ppm, ± 30% at 0.05 ppm, higher concentrations measured by dynamic dilution.

HOUSTON ATLAS, INC.

The Model 855 Analyzer is comprised of two components:
The PYROLYZER* for sample preparation and conversion of all liquid hydrocarbons to gases and all sulfur compounds into hydrogen sulfide. The Model 825 H_2S Analyzer for readout of sulfur content.

GENERAL SPECIFICATIONS

RESPONSE TIME:	93% in 30 minutes at 2 ppm full scale plus flow tubing resident time. More rapid response at high sulfur levels.
RANGES:	As specified. 0–2 parts per million to 0–20% by weight sulfur. Normally continuous reading, peak reading below 50 ppm.
LINEARITY:	± 3% of scale (+ 3% at 50% FS).
SUPPLIES:	Hydrogen gas (sulfur free) at 1 SCFH required. Lead acetate sensing tape. 5% acetic acid solution.
CONSTRUCTION:	Flow system stainless steel, 1/16 inch tubing. Available in explosion proof model.

RAC Model 5000

OPERATION

Filter paper tape is fed through the sampling nozzle where air is drawn through tape by an oil-less vacuum pump at approximately 0.25 cubic feet per minute. Pump rate (1.1 CFH) is controlled and set at 0.25 CFM (15CFH) by a flow adjust valve.

Filtered exhaust air places slight positive pressure in sampler's front area to prevent any contamination of tape around sampling spot.

Tape, punched on two inch centers for positive indexing, is moved automatically by timer which can be pre-set for any sampling period from 5 minutes to 3 hours 20 minutes in 5 minute increments. When sampling period ends, tape is automatically indexed.

Samplers are easily adapted for sampling gases such as hydrogen sulfide. A prefilter and humidity jar is attached to air inlet and exhaust gases are passed through a soda and lime tube to scrub out any hydrogen sulfide that may have passed through the tape.

Direct reading range: 0.001 to 0.5 ppm in 1 hour sample (x 12 in 5 minutes); higher levels by flow dilution.

Stated accuracy:
± 15% of scale at 0.4 ppm
± 30% of scale at 0.05 ppm

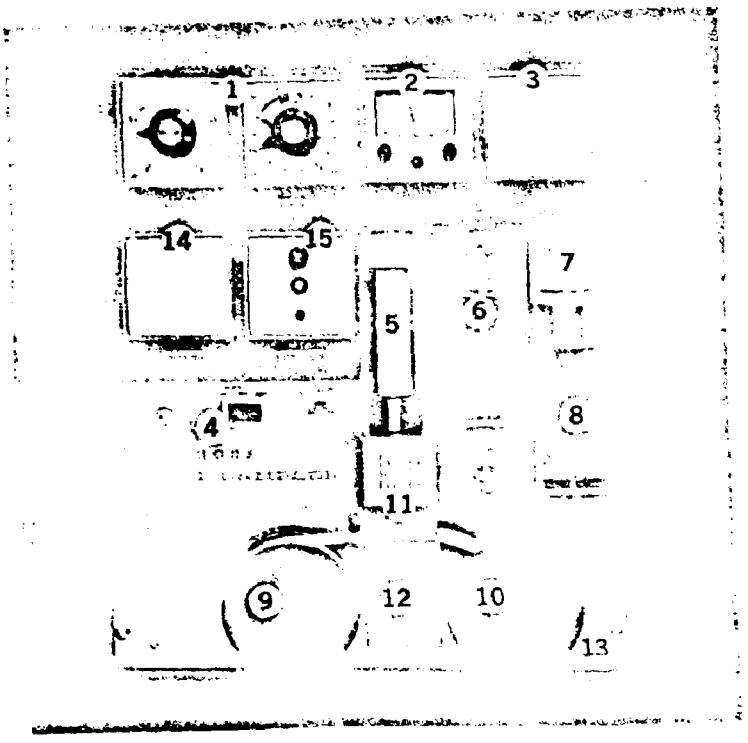

CONDUCTIMETRY (SO_2)

Principle of Operation

The air sample is absorbed in a dilute solution of sulfuric acid (H_2SO_4) containing hydrogen peroxide (H_2O_2). Any SO_2 in the sample is converted to SO_3 and H_2SO_4 according to the reaction below, thus increasing the conductivity which is recorded as SO_2 concentration.

$$H_2O_2 + SO_2 \longrightarrow H_2SO_4$$

Most conductivity systems are equipped to measure conductance in solutions between two platinum electrodes. Distilled or deionized water should be used. Absorption of CO_2 is prevented and its interference reduced by using enough H_2SO_4 to give an equivalent of $2X10^{-5}N$ and enough H_2O_2 (3%) to bring the absorbent to a strength of $3X10^{-3}M$ with respect to peroxide. Instruments are calibrated against primary standards.

Commercial Equipment

Instruments from a number of suppliers are available as listed below:

Beckman Instruments, Fullerton, Calif.; Models K78 and K1006
Inst. Development Corp; Reston Va.; Models 903-1, 902-3
Kimoto Electric, Osaka, Japan; Model S-350N
Leeds and Northrup, North Wales, Pa.; Model 7860
Research Appliances
Hartmann-Braun = Intertech, Princeton, N.J.
Wösthoff (Mikrogas) = Calibrated Instruments, Ardsley, N.Y.; Model U3S
Davis Instruments, Charlottesville, Va.; Model 11-7000
Scott Aviation; Model 7010 RPA
Scientific Industries, Hempstead, N.Y.; Model 67

References

1. Principle of Operation: 63, 73, 35

2. Applications: 63, 107, 73

3. Data: 63, 107, 73

4. Specific Instrument Description: 63

Discussion

Advantages

1. Very good performance in the range of 0.2 - 4 ppm with a standard deviation of 0.01 - 0.9 ppm.

2. Specific when SO_2 is the principal acid gas present.

3. Interference due to NO_x at concentrations generally found in ambient atmosphere is not significant.

4. Used widely by many air pollution agencies.

Disadvantages

1. Errors can occur if interfering substances exceed 10% of SO_2 level.

2. Interfering substances are not easy to monitor.

Conclusions

Most instruments are sensitive enough for general use with a minimum of interference problems. The various instruments generally correlate fairly well. Improvements are still being made for more selective monitors, which will be reliable under varying conditions.

Recommendations

Most instruments perform well but need frequent checking against standards.

ULTRAVIOLET SPECTROPHOTOMETRY (H_2S, SO_2)

Principle of Operation

Direct measurement of SO_2 is possible in the ultraviolet (UV) range since this gas absorbs strongly at about 285 nm. H_2S may be converted to SO_2 by oxidation, or converted to other derivatives which absorb in this range. The effects of UV interferences can be minimized by dual beam measurements at two wavelengths. Methods and equipment have also been developed for the detection of H_2S and SO_2 in the presence of one another (108, 109).

In the method for detection of H_2S and SO_2 simultaneously (109), the sample gas is mixed with air, filtered and split into two streams. One stream passes through an oxidation furnace to convert the H_2S to SO_2 and the other stream, which is used as a reference, is passed through a dummy furnace and exits unchanged. The two streams are analyzed for SO_2 and H_2S content determined by difference. Systems can be arranged to use the unchanged stream in a reference cell and compare the differences in UV absorption electronically to give a direct reading proportional to the H_2S content of the sample gas. Such a system can measure SO_2 and/or H_2S in the range of 10-2500 ppm. In another system, H_2S is absorbed on a filter medium impregnated with $Pb(Ac)_2$ and the PbS precipitate extracted with organic solvent (CH_3COOCH_3, CH_3OH and HOAc)(110). The resulting brown suspension is measured with a spectrophotometer at 350 nm. The amount of H_2S is determined by comparison to a standard curve. Reproducibility is reportedly $\pm$15% (110) with very little humidity effect.

Commercial Equipment

The duPont Model 461 UV Spectrophotometer is available to automatically determine SO_2 (and H_2S). The major components for the oxidation method including the sample handling system, have also been made by Analytic Systems Co. to be used with their Series 600 UV analyzer, but not on a commercial basis.

References

1. Principles of operation: 110, 111, 109
2. Applications: 110, 109
3. Data: 112, 110, 109
4. Specific instrument description: 110, 109

Discussion

Advantages

1. Specific for SO_2, at high concentrations.

2. Reliable measurement over a wide concentration range.

3. The $Pb(Ac)_2$ extraction method gives a collection efficiency of greater than 90% and compares favorably with the methylene blue method (112).

Disadvantages

1. Dual measurement is more reliable for differences or ratio measurements of H_2S and SO_2 than for absolute values.

2. Other reduced sulfides also oxidized to SO_2.

3. SO_2 and ozone interfere in the $Pb(Ac)_2$ method but can be removed by scrubbing for H_2S only determinations.

4. The $Pb(Ac)_2$ tape fades with time.

Conclusions

Satisfactory for field sampling, but other methods such as the coulometric titrators, tape samplers and combined GC techniques generally better where absolute values are required.

Recommendations

Not recommended for complex mixtures, useful where H_2S and SO_2 are the principal constituents to be determined.

COLORIMETRY (SO_2, H_2S, Mercaptans)

Principle of Operation

A sample of gas is bubbled through a solution which selectively absorbs the component desired. The absorbed compound is than reacted with specific reagents to form a characteristic color which is measured spectroscopically.

Separate methods have been developed for the determination of SO_2 and sulfides (H_2S and mercaptans). Both types of gases may be detected in the presence of the other by use of scrubbers to absorb the undesired materials.

For the determination of SO_2 a dilute aqueous solution of sodium tetrachloromercurate is used for absorption to form nonvolatile techlorosulfito-mercurate ion. This is reacted with formaldehyde and bleached pararosaniline to form a red-purple color and measured at 560 nm. This is the modified West-Gaeke method and has been tentatively adopted as a standard by the NAPCA (114).

"Total reduced sulfides" including H_2S and volatile mercaptans may be determined colorimetrically by the methylene blue method which involves absorption of the gas in an alkaline suspension of $Cd(OH)_2$ to form CdS. The precipitate is then reacted with a strongly acid solution of N, N dimethyl-p-phenylenediamine and $FeCl_3$ to give methylene blue, which is measured spectrophotometrically at 500 nm. This procedure has been adopted as a standard method for H_2S (108).

Commercial Equipment

1. SO_2 Analysis

Instrument manufacturers (Atlas, IDC, Monitor Labs, PSD, Technicon and WACO) supply components to collect and analyze gases for SO_2. Selective prefilters may be added depending upon the nature of the gas sample to be analyzed. Automated analytical trains for this procedure are supplied by Technicon and others in this country and by several manufacturers in Germany, England, and Japan.

2. H_2S Analysis

Instruments such as those noted above for SO_2 may be adapted for H_2S analysis.

References

1. Principle of Operation:
   For SO_2: 63, 64, 73, 115, 35, 116, 67, 114, 117
   For H_2S and Mercaptans: 64, 73, 115, 92, 118, 119, 120, 121 122, 116, 67

2. Applications:
   For SO_2: 63, 64, 73
   For H_2S and Mercaptans: 64, 115, 92, 67

3. Data:
   For SO_2: 63, 73, 35
   For H_2S and Mercaptans: 73, 115, 92, 123, 124, 108, 67

4. Specific Instrument Description:
   For SO_2: 63, 125, 99, 100
   For H_2S and Mercaptans: 115, 108

Discussion

For SO_2

Advantages

1. Specific to SO_2.
2. Levels from 0.002 to 5 ppm can be detected.
3. Sensitivity in the range of 0.02 - 0.04 ppm or better (in the 1 ppm range).
4. Correlates well with most other test methods.
5. Response time to changes in SO_2 concentration fairly rapid (15 min.)
6. Has been chosen as a tentative standard by EPA.

Disadvantages

1. Ozone, Cl_2, HCl, NH_3 and NO_2 interfere if more than 10% of SO_2 concentration, by destroying some of the dye.
2. Requires careful reagent quality and temperature control.

For H_2S

Advantages

1. Sensitive to 1-100 ppb at 10 mg/m^3.
2. Specific for H_2S and reduced sulfides.
3. Standard deviation $\pm$ 3.5%, recovery 80% or better.
4. Being used as a tentative standard for ambient H_2S measurement.

Disadvantages

1. Strong reducing agents (e.g., SO_2) inhibit color development.
2. Total reduced sulfides respond.
3. NO_2 above 0.3 ppm and O_3 above 57 ppb interfere.

4. Takes discrete samples, not a continuous method.

5. Economics are favorable only when a large number of similar samples are to be measured in a short time.

Conclusions

Colorimetric methods for both SO_2 and H_2S (and mercaptans) are very satisfactory, but have not been developed yet to give direct, continuous measurements.

Recommendations

Further work is needed to develop fully automated, continuous, rapid response techniques.

ELECTROCHEMICAL

Principle of Operation

The pollutant gas diffuses through a selective membrane and dissolves in the underlying electrolyte film and becomes adsorbed at a sensing electrode where a charge transfer occurs. The flow of electrons forms a current which is proportional to the partial pressure of the pollutant. Such sensors are reported to be liquid-state devices that contain surfaces onto which the pollutants are adsorbed. The adsorption is followed by electron transfer either to or from the adsorbate. The current flow is determined mainly by the rate at which the gas molecules reach the catalytically active surface and by the valence change which the adsorbed species undergo at this surface.

Presumably the catalytically active electrodes and the electrolyte are enclosed in the sensor that is equipped on one surface with a semi-pereable membrane. The membrane is exposed to the atmosphere being monitored. The current generation by the sensor is permeation-controlled by the transport of the pollutant gas through the membrane. The rate of permeation is proportional to the pollutant concentration in the atmosphere. The selectivity of the sensor is attained through the appropriate combination of catalytically active electrodes and electrolyte.

Commercial Equipment

Prototype instruments are available by Dynasciences and by Enviro Metrics, Inc. for SO_2 or H_2S, but not for other sulfur-containing gases.

Discussion

Although the principle has been demonstrated, application of this method is still under development. Test results to date indicate that sensors in the emission concentration range (0-1000 ppm) are more reliable than those offered for the ambient range (0.04-2.0 ppm).

References: (35)

BIOLUMINESCENCE (H_2S, RSH)

Principle of Operation

This detection system involves the utilization of extremely sensitive and highly reliable biosensors - living, light-emitting (bioluminescent) organisms. The biosensor cartridge is placed in an electro-mechanical system which is equipped with a photocell to monitor the light generated by the bacteria. An air pump pulls the sample gas across the surface of the biosensor whose response is monitored electronically and displayed on a meter. Specific sensors must be selected to monitor specific pollutants.

Commercial Equipment

Prototype units and sensors are available from RPC Corporation, El Segundo, California.

Discussion

The supplier's information indicates a diverse capability by use of individual strains of bacteria which respond selectively to different chemicals. Sensitivity can be greatly improved by selective breeding of bacterial strains and has been extended in some cases to concentrations below 10^{-12} mol fraction. Certain biosensors are capable of responding to classes of chemicals, but yet are capable of differentiating qualitatively between members of that class. Sensitivity of specific cultures now available permits detection of H_2S at 70 ppb, SO_2 at 0.2 ppb, or NH_3 at 0.001 ppb.

Reference: 126

CHEMILUMINESCENCE (NH_3)

Principle of Operation

NH_3 is converted to NO_2 by thermal conversion at above 300°C and then reacted with ozone to produce nitric oxide

$$4NH_3 + SO_2 \xrightarrow{\Delta} 6H_2O + 4NO \quad (1)$$

$$NO + O_3 \longrightarrow NO_2^* + O_2 \quad (2)$$

Chemiluminescence is produced by deactivation of the NO_2^*

$$NO_2^* \longrightarrow NO_2 + h\nu \; (\;_{max} \simeq 6300 \text{ Å}) \quad (3)$$

Chemiluminescence detectors, based on a prototype unit developed by Ford Research of Dearborn, which have been developed for the monitoring of NO_x in ambient air, may be used combined with a thermal preconverter to oxidize the NH_3. This equipment has a fast linear response and is sensitive to concentrations of 0.005ppm (127). The equipment consists of a variable temperature chamber containing catalytic surfaces in which the gas stream and oxidant are reacted. Conventional ozone generators with appropriate scrubbers to provide clean air may be used to furnish the atomic oxygen for the conversion of NO to NO_2^*.

NO_2, SO_2 and CO also react with atomic oxygen to produce chemiluminescence. SO_2 and CO^- activated oxygen compounds emit at different wavelengths (3500 Å and 4350 Å) and may be distinguished from NO_2^* emissions. To detect NH_3 in the presence of NO_x the NH_3 may be separated from the NO_x components and determined by difference using either a split gas stream or separate analyses for total and total less NH_3.

Commercial Equipment

Commercial units are available from Aerochem, Bendix, Scott Research, REM and Thermo Electron.

References

Principle of Operation: 127, 128, 129
Applications: 127, 130, 131
Data: 127, 129
Specific Instrument Descriptions: 127, 132

Discussion

Advantages

1. CO and SO_2 cause no interference.
2. NO_x can be readily distinguished by separating out NH_3.
3. Rapid response (1 sec.).
4. High reliability anticipated.
5. Reasonable cost.
6. Range of 0.002 - 1000 ppm.

Disadvantages

1. Continuous evacuation to 1-5 torr required for reactor flow.
2. Other reduced N compounds interfere i.e., amines.

Conclusions

Not specific enough for NH_3, other methods such as direct titration probably better suited, but combinations with NO_x can be measured.

Recommendations

Satisfactory for use in combinations containing NO_x and NH_3. A similar method might be possible for determination of SO_2.

FAST SCAN INFRARED SPECTROMETER (SO_2)

Principle of Operation

A single-beam spectrophotometer with automatic repetitive scanning in 5 or 12.5 seconds, of wavelengths in three divisions 2.5 to 4.5 microns; 4.4 to 8.0 microns and 7.9 to 14.5 microns with interference filters is used, coupled with a high speed hot-stylus oscillographic recorder. Bands in the spectrum from CO_2 and moisture in the air are corrected by means of a background trace before and after analysis. Spectra are obtained by simultaneously passing the pure gas and dilution gas (He or N_2) through the gas cell in a flow-through manner. The small spectrum makes it essential that measurement of the band absorbance is accurate. To assure this, part of the standard IR absorbance scale is redrawn, photographed, and reduced to the size of the instrument spectra. A transparent plastic overlay is then placed over the spectra and the absorbance of the individual band is measured. With the aid of an illuminated magnifier, readings can be obtained with an accuracy of ± 0.05 to ± 0.1 and good reproducibility.

Commercial Equipment

Several fast-scan IR spectrophotometers are available such as the Warner-Swasey (OCLI) and Beckman IR-102. A completely automated analyzer system has not been produced.

References

1. Principle of operation: 133
2. Applications: 133
3. Data: 133
4. Specific instrument descriptions: 133

Discussion

Advantages

1. Gives a complete spectrum in 12.5 seconds or less.
2. The instruments can be made portable and may be used up to temperatures of 300°C.

Disadvantages

1. Cannot be used in actual stack gas analysis.
2. Suited primarily as a research tool.

Conclusions

A good method for research studies with clean, dry gases.

Recommendations

Not practical for control studies.

FLUORESCENCE (H_2S)

Principle of Operation

Fluorescent liquids can be made which react with H_2S and other sulfur compounds resulting in a reduction of fluorescence. The change in fluorescence may be related to the concentration of S compound absorbed. The original procedure developed (73) utilized tetra-acetoxymercarifluorescein (TMF) and a method has been suggested for its use in the determination of H_2S in the atmosphere (48). Recent improvements (47) include use of fluorescein mercuric acetate (FMA) instead of (TMF) since the former is commercially available.

Photofluorometers are available for measurement of the solution fluorscence in conjunction with a paried optical filters (Corning Glass No. 5113 and 2424). The method involves passing a known volume of air through a specific volume of FMA solution in 0.01N NaOH. Fluorscence is measured and compared with a standard calibration curve. A linear response is obtained at H_2S concentrations ranging from about 4-6 μg of H_2S in 25 ml. of solution.

Commercial Equipment

None available, but photofluorometers are available such as the Model 12C from Coleman Instruments, which could be built into a prototype unit for monitoring ambient air or emissions.

References

1. Principle of Operation: 47, 48, 73, 35
2. Applications: 47, 48, 35
3. Data: 47, 48
4. Specific Instrument Description: 47

Discussion

Advantages

1. FMA reagent stable up to 16 days.
2. Method reliable and accurate to $\pm$ 1% in the range of 2-8 μg of H_2S.

Disadvantages

1. Mercaptans and disulfides also cause quenching of fluorescence.
2. Effect is non-linear in multicomponent blends.
3. Solutions stable for only 16 days.
4. Acidic materials in air such as CO_2, SO_2 could affect reagent if over 500ppm by volume in air.

Conclusions

Good for H_2S in presence of CO_2 + SO_2 at low air concentrations. Mercaptans + disulfides may interfere.

Recommendations

Consider for a prototype instrument.

INFRARED SPECTROSCOPY (H_2S, CH_3SH, RSH, RSSR)

Infrared spectroscopy measures the energy absorption pattern in the vibrational and rotational modes of organic molecules. This characteristic can be utilized to measure organic compounds such as mercaptans directly with the IR, or derivatives of H_2S which are prepared subsequent to collection. IR is not a good method for H_2S itself.

For direct measurement of gases, the material is collected in a suitable container, and water generally removed prior to measurement of I.R. absorption. Direct measurement has limited use due to the complexity of most odorous emissions and a preliminary separation is usually preferred. Combinations of IR with gas chromatographic (GC) separation techniques are discussed in the section on GC.

Commercial Equipment

IR spectrophotometers suitable for the detection of sulfides and sulfur derivatives are available from Bausch and Lomb, Beckman, Perkin-Elmer, and many other manufacturers.

References

1. Principles of operation: 137

2. Application: 137

3. Data: 137

4. Specific instrument description: 137

Discussion

Advantages

1. Permits positive identification of components.

2. Interference effects are slight in most simple mixtures.

Disadvantages

1. Separation techniques generally required prior to analysis due to the complexity of ambient or emission gas samples.

2. Complete analysis is a research procedure, not for routine use.

3. Not a good method for H_2S, which has a weak spectrum.

Conclusions

IR methods have limited application for direct measurements.

Recommendations

IR is a powerful tool when combined with an appropriate separation technique and should be considered for identification techniques in such systems.

IR LASER RADIATION (SO_2)

Principle of Operation

Carbon dioxide or iodine infrared lasers are attenuated when passed through a sample gas and this change is related to the concentration of pollutants in the gas sample. The narrow spectral width of the laser emission permits sensitive detection of pollutants. Three modes of operating the laser probe are possible (1) using a folded beam laser, (2) reflecting the laser beam from a retro-reflector, and (3) reflecting the laser beam from natural targets.

Commercial Equipment

No commercial equipment is available although the laser components are produced.

Discussion

Currently efforts are being made to build prototype units for field testing. This technique shows promise because it permits remote sensing, is not affected by atmospheric moisture, and minimizes interferences among pollutants. It is anticipated SO_2 can be detected at 1.5 ppm using a CO_2 laser.

Reference: (138)

METALLIC SILVER FILTER MEMBRANE (H_2S)

Principle of Operation

Metallic silver reacts with H_2S and/or mercaptans to produce silver sulfide by the following reaction:

$$H_2S + 2Ag + 1/2O_2 \xrightarrow{(H_2O)} Ag_2S + H_2O$$

$$2RSH + 2Ag + 1/2O_2 \xrightarrow{(H_2O)} AgSR + H_2O$$

The black silver sulfide formed changes the reflectance of the original silver surface. This can be measured by a reflectometer and related to sulfide content of the ambient gas. The reflectance of the initial surface may be compared to a standard magnesium oxide surface as defined by the U.S. Bureau of Standards. A membrane of metallic silver reacts quantitatively with H_2S or mercaptans causing a decrease in the reflectivity of the surface. Each membrane is calibrated before use to the nearest 1/2 reflectance unit using a reflectance meter equipped with a green tristimulus filter.

Commercial Equipment

No equipment is available for automatic determination of gaseous sulfides by this method. Components are available for reflectance measurements and air sampling, but a complete system has not been devised.

References

1. Principle of operation: 139, 140, 141, 142, 143
2. Applications: 139
3. Data: 139
4. Specific instrument descriptions: 139

Discussion

Advantages

1. Sensitive to very low concentrations of H_2S and RSH.

2. NO_x, O_3 or ultraviolet light do not interfere, as they do with $Pb(Ac)_2$, $HgCl_2$ and other similar detectors.

3. Simple, low cost and rapid.

Disadvantages

1. Mercaptans interfere.

Conclusions

Needs further testing, since the method appears quite promising.

Recommendations

For the detection of very low concentrations of mainly H_2S, the metallic silver membrane seems appropriate for further development. To detect high concentrations other methods probably better suited to automation.

PLASMA CHROMATOGRAPH (SO_2, RSH, RSSR)

Principle of Operation

Gases are detected by conversion to ion-molecules and separated by drifting through an electical field toward a detector. The detector output of ion current versus time presents a plasmagram of the reactant ion and the different ion molecules formed. The plasmagram resembles a chromatogram, with a millisecond time scale.

Commercial Equipment

None available.

Discussion

This technique enables measurement of the mass of an organic molecule with an instrument that operates at atmospheric pressure. Thus, it may be possible to use as a simpler instrument than the mass spectrometer for detailed analyses. This instrument, with further development may become a valuable laboratory tool.

References: 144, 145

BIBLIOGRAPHY

(1) Duffee, R. A., JAPCA 18:472-4, July, 1968.

(2) Katz, S. H. and Talbert, E. J., U.S. Bur. Mines Tech. Paper 480 (1930).

(3) Ryazanov, V. A., Arch. Environ. Health 5:480-94, 1962.

(4) Manufacturing Chemists Assoc. Research on Chemical Odors. Research report from A. D. Little, Inc., October 1968.

(5) Dravnieks, A., "Theories of Olfaction", in Chemistry and Physiology of Flavors, ed. H. W. Schultz, Avi Publishing Co., Westport, Conn. (1966).

(6) Hendrickson, E. R., Control of Atmospheric Emissions in the Wood Pulping Industry, Vol. 3, Final Report of EPA Contract CPA 22-69-18, 1970. NTIS No. PB 190,353.

(7) Blosser, R. O. and Cooper, H.B.H., Jr., "Compendium of Methods for Measuring Ambient Air Quality and Process Emissions", National Council for Air and Stream Improvement, Technical Bulletin No. 38, New York, Dec. 1968.

(8) Thoen, G., DeHaas, G. G. and Austin, R. R., TAPPI 51:246, 1968.

(9) Adams, D. F., Presentation at the Ninth Methods Conference in Air Pollution and Industrial Hygiene Studies, Pasadena, California. "Analysis of Malodorus Sulfur Containing Compounds" February 7-9, (1968).

(10) Stevens, R. K., O'Keeffe, A. E. and Ortman, G. C., Environ. Sci. & Tech. 3, 652 (1969).

(11) Turk, A., Heating, Piping, Air Cond. 39 207-10, 1968.

(12) Larsen, R. I., APCA Meeting New York, June 1969, Paper 69-210.

(13) Mills, J. L., Walsh, R. T., Luedtke, K. O. and Smith, L. K., JAPCA 13:467-75, 1963.

(14) Benforado, D. M., Rotella, W. J. and Horton, D. L., JAPCA 19:105-5, 1969.

(15) Banks, O. M., "Problems of Odor Measurement and Control", American Petroleum Institute, New York, Oct. 1969.

(16) Landsberg, H. and Escher, E. E., Ind. Eng. Chem. 46:1422-8, 1954.

(17) Walther, J. E. and Amberg, H. R., TAPPI 51:126A-29A (1968).

(18) Tarman, P. B., Andreen, B. H. and Kniebes, D. V., Chem. Eng. Progress 61(17):1-8 (1960).

(19) Washburn, H. W. and Austin, R. R. in "Air Pollution", ed. McCabe, Chapter 72, 576 McGraw Hill, New York, 1952.

(20) Fredericks, E. M. and Harlow, G. A., Anal. Chem. 36:263, 1969.

(21) McWilliams, I. G. and Dewar, R. A., Nature 181:760, 1958.

(22) Adams, D. F., Jensen, G. A., Steadman, J. P., Koppe, R. K. and Robertson, T. J., Anal. Chem. 36:1094 (1966).

(23) British Columbia Research Council, "A Manual Describing a Method for the Collection and Analysis of Pulp Mill Effluents", Vancouver, 1959.

(24) Adams, D. F. and Koppe, R. K., TAPPI 41:366, 1958.

(25) Blaedel, W. J. and Laessig, R. H., "Automation of the Analytical Process through Continuous Analysis", in Advances in Anal. Chem. and Instrumentation 5:69-168, J. Wiley, New York, 1966.

(26) Kenline, P. A. and Hales, J. M., "Air Pollution and the Kraft Pulping Industry",, PHS Publication 999-AP-4, 1963.

(27) Walther, J. E. and Amberg, H. R., JAPCA 20(1):9-18, 1970.

(28) Schwalbe, C. G., Paper Trade J. 74:52, 1922.

(29) Colombo, R., Corbetta, D., Pirotta, A. and Sartori, A., TAPPI 40 490, 1957.

(30) Bergstrom, H. and Trobeck, K. G., Svensk Papper 48:49-54, 1945; see also U.S. Patent 2,406,581.

(31) Control Techniques for Sulfur Oxide Air Pollutants, NAPCA Publication No. AP-52, Chapter 5.2.

(32) Air Pollution Control Assoc. Petroleum Committee TI-3, JAPCA 14 (1), 1964.

(33) Termeulen, M. A., "Air Pollution Control by Oil Refineries", First International Clean Air Congress, London 1966, Paper IV-5.

(34) Palmer, H. F., Rodes, C. E. and Nelson, C. J., JAPCA 19:778-86, 1969.

(35) Tokiwa, Y., "Sulfur Dioxide", paper at 11th Methods Conference in Air Pollution, Berkeley, Cal., April 1970.

(36) Thomas, M. D. and Cross, R. J., Ind. Eng. Chem. 20:645, 1928; ibid. Anal. Ed 4:253-6, 1932 and 15:287-90, 1943.

(37) Danielson, J. A., "Air Pollution Engineering Manual", Air Pollution Control District, County of Los Angeles, U.S. Dept. of HEW (1967).

(38) Teller, A. J., APCA 13 No. 4 Pg. 148 (April 1963).

(39) Ronald, D., "Handbook on Offensive Trades", Wm. Hodge, London (1935).

(40) Wood, T. and Bender, A. E., "Analysis of Tissue Constituents - Commercial Ox-Muscle Extract", 67 (1957).

(41) Burchfield, H. P., Johnson, D. E., Rhoades, J. W., and Wheeler, R. J., J. Gas Chromatog. 3:28, 1965.

(42) Hemeon, W.C.L., "Malodors - A Basis for Regulations", JAPCA, 21 (12) Pg. 770 (Dec. 1971).

(43) Sullivan, R. J., "Air Pollution Aspects of Odorous Compounds", Technical Report by Environmental Systems, Bethesda, Md., (For Nat'l Air Pollution Control Administration, USPHS).

(44) Stahl, Q. R., "Preliminary Air Pollution Survey of Aldehydes", U.S. Dept. of HEW, Publ. Health Service, NAPCA, (Oct. 1969).

(45) Dravnieks, A., "Current Status of Odor Theories", Advances in Chemistry, Series #56, Pg. 29 (1966) ACS.

(46) Dravnieks, A. and Lafford, P., "Possibilities of Predicting Odor Intensity and Quality by Means of Chemical Analysis", Conf. on Odorous Pollutants, The Karolinska Institute, Stockholm, (June, 1970).

(47) Miller, F., et al., "Determination of Acetic Acid in Air", Amer. Ind. Hyg. Assoc., 16 (1) Pg. 221 (Mar. 1955).

(48) Holmes, R. G., "Air Pollution Source Testing Manual", Los Angeles Air Pollution Control District, Los Angeles County, Calif.

(49) Stahl, W. H., "Instrumental Methods Used in the Analysis of Odorants", Proceedings of the 3rd Annual Symposium on Problems in Air Pollution, Franklin Institute (Oct. 1958).

(50) Williams, I. H., "Gas Chromatographic Techniques for the Identification of Low Concentrations of Atmospheric Pollutants", Anal. Chem. 37 (13) Pg. 1723 (Dec. 1965).

(51) Levaggi, D. A. and Feldstein, M., "The Determination of Formaldehyde, Acrolein and Low Molecular Weight Aldehydes in Industrial Emissions" JAPCA 20 (5) Pg. 312 (May 1970); 19 (1) Pg. 43-5 (Jan. 1969).

(52) Prater, T. J., "Exhaust Gas Carbonyl Measurements by the Gas Chromatographic 2,4-Dinitrophenylhydrazine Method", Ford Motor Co., Dearborn, Mich.

(53) Burnett, W. E., "Air Pollution from Animal Wastes", Environmental Science and Technology 3 (8) Pg. 744 (Aug. 1969).

(54) Okita, T., "Filter Method for the Determination of Trace Quantities of Amines, Mercaptans and Organic Sulfides in the Atmosphere", Atmospheric Environment, Pergamon Press 1970 Vol. 4 Pgs. 93-102, Printed in Great Britain.

(55) Dravnieks, A. and Krotoszynski, B. K., "Systematization of Analytical and Odor Data on Odorous Air", from Symposium Bulletin, "Odors and Odorants: The Engineering View", Amer. Soc. of Heating, Refrigerating and Air Conditioning Engineers, Inc. (ASHRAE), (1968).

(56) "The Kovats Retention Index System", Anal. Chem. 36 (8) Pg. 31A (1964).

(57) Dravnieks, A. and O'Donnell, Anne, "Principles and Some Techniques of High-Resolution Headspace Analysis", J. Agr. Food Chem. 19 (6) Pg. 1049 (1971).

(58) Trieff, N. M., et al., "Analysis of Industrial Odor Emissions", 19th Pittsburg Conf. on Analytical Chemistry and Applied Spectroscopy, Inc. Cleveland, Ohio (Mar. 1968).

(59) Dravnieks, A., "Odors: Their Nature, Measurement, and Control", IIT Research Institute, Chicago, Ill.

(60) Burgwald, T. A., "Identification of Chemical Constituents in Rendering Industry Odor Emission", IIT Research Institute Report.

(61) Smith, D. O. and Tauss, R. H., "Modification of a Coulometric Titrator for the Monitoring of Gaseous Pulp Mill Effluents", S. Pulp Paper Mfg 33 #2, 32, 4-6 (1970).

(62) Austin, R. R., "Sampling and Analysis of Pulp Mill Gases for Sulfur Compounds", TAPPI, 54 #6, 977-80 (1971).

(63) Palmer, H. F., Rodes, C. E. and Nelson, C. J., "Performance Characteristics of Instrumental Methods for Monitoring Sulfur Dioxide II Field Evaluation", JAPCA, 19, #10, T18-86 (1969).

(64) Kesler, R. B., "Modern Methods of Monitoring Gaseous Pulp Mill Effluents for Sulfur Compounds", Advan Automat Anal., Technicon Int. Congr. 2, 111-14 (1969).

(65) Austin, R. R., et al., "The Application of Coulometric Titration to Atmospheric H_2S and SO_2 Measurements and to Hydrogen Reforming Measurements", Ann u. ISA Conf. Proc. 20, #3, 2.1-1-65 (1965).

(66) Bamesberger, W. L. and Adams, D. F., "Field Comparison of the Coulometric, Colorimetric, and Lead Acetate Tape Analysis Methods for Sulfur Containing Gases", TAPPI, 52, #7, 1302-1306 (1969).

(67) Garber, W. F., et al., Journal WPCF, 42, #5, 209-220 (1970).

(68) Thoen, G. N., et al., "Continuous Measurement of Sulfur Compounds and Their Relationship to Operating Kraft Mill Black Liquor Furnaces", TAPPI, 52, #8, 1485-87 (1969).

(69) Tretter, V. S., TAPPI, 52, #12, 2324-26 (1969).

(70) Adams, D. F., et al., "Analysis of Sulfur Containing Gases in the Ambient Air Using Selective Pre-Filters and a Microcoulometric Detector", JAPCA 18 #3, 145-8 (1968).

(71) Andree, B. H., et al., "Instrumental Methods of Analysis for Odorant Compounds in Natural Gas", Inst. of Gas Technology, Tech. Report No. 7 (1963).

(72) Nader, J. S. and Coffey, W. L., "Automatic Zero Drift Correction of the Titrilog", Am. Ind Hyg Assoc. J 24 (8), 563-5 (1963).

(73) Stevens, R. K., "Review of Analytical Methods for the Measurement of Sulfur Compounds in the Atmosphere", 11th Conf. on Methods in Air Pollution and Industrial Hygiene Studies, Calif. State Dept. of Public Health (1970).

(74) Adams, D. F., et al., "Analysis of Kraft-Mill, Sulfur Containing Gases with GLC Ionization Detectors", JAPCA 15, #1, 31-33 (1965).

(75) Adams, D. F. and Koppe, R. K., "Direct GLC Coulometric Analysis of Kraft Mill Gases", JAPCA, 17, #3, 161-65 (1967).

(76) Drushel, H. V., Preprints, Div. Petr. Chem. ACS, 14, #3, B232 (1969).

(77) Drushel, H. V., Analytical Letters, 3, 353, (1970).

(78) Killer, F.C.A. and Underhill, K. E., Analyst, 95, 505 (1970).

(79) Marsh, W. W., Jr., Analytical Letters, 3, 341 (1970).

(80) Engelhardt, H., Instr. Rev. Pg 98-99, (Feb. 1968).

(81) Stevens, R. K., et al., "Gas Chromatography of Reactive Sulfur Gases in Air at PPB Level", EPA Publication.

(82) Mulik, J. D., et al., "An Analytical System Designed to Measure Malodorous Compounds Related to Kraft Mill Activities" TAPPI Water and Air Conf. Apr. 1971.

(83) Mulik, J. D., "Continuous Determination of Sulfur Dioxide with Flame Photometric Detector, ibid (1970).

(84) McGinnity, et al., "Mobile Source Sampling Laboratory for the Pulp and Paper Industry Presented at a Symposium on Methods for Measuring and Evaluating Odorous Air Pollutants at the Source and in the Ambient Air 6/1-5/70 Dept. of HEW, NAPCA, Durham, NC.

(85) Harrison, G.A.F. and Coyne, C. M., J. Chromatogr., 41, #3,4, 453-5 (1969).

(86) Brink, D. L., et al., "Analysis of Sulfur Containing and Sulfur Free Organic Products Formed in Kraft Black Liquor Pyrolysis", TAPPI 54, #5, 714-20 (1971).

(87) Adams, D. F. and Koppe, R. K., TAPPI, 42, #7, 601-605 (1959).

(88) Siu, W., Levaggi, D. A., et al., "Modifications to an H_2S Tape Sampler for Increasing Sensitivity and Accuracy in H_2S Sampling", JAPCA, 21, #10, 636-8, (Oct. 1971).

(89) Dravnieks, A., "Olfactory Information Information Processing and Mechanisms", AGARD Symposium on Bionics, Brussels, Belgium, Sept. 1968.

(90) Applebury, T. E. and Schaer, M. J., JAPCA, 20, #2, 83-6 (1970).

(91) Walther, J. E. and Amberg, H. R., "Continuous Monitoring of Kraft Mill Stack Gases with a Process Gas Chromatograph", TAPPI, 50, #10, 108A-110A (1967).

(92) Adams, D. F., "Analysis of Malodorous Sulfur-Containing Gases", TAPPI 51, #1, 53-58 (1969).

(93) Craig, J. C., et. al., "Analysis of Organic Pollutants", Univ. of Calif., Project Clean Air, Res. Rep. 6 V11-115, Sept. 1, 1970.

(94) Feldstein, M., et. al., "Gas Chromatographic Determination of Mercaptans", JAPCA 15, #5, Pg 215-17 (1965).

(95) Williams, I. H. and Murray, F. E., "Studies of the Gas Chromatographic Analysis of Kraft Mill Sulfides Part I Collection and Analysis of Gaseous Samples", Pulp Paper Mag Can 67, #8, T347-52, (1966).

(96) Martin, R. L., Anal. Chem., 38, 1209 (1966).

(97) Adams, D. F., et. al., TAPPI, 43, #6, 602-608 (1960).

(98) McKean, W. T., Jr., et. al., TAPPI, 48, #12, 699-704 (1965).

(99) "Environmental Measurements" (1965), PHS Publication No. 999-AP-15.

(100) Morgan, G. B., et. al., Automation in Analytical Chemistry, Technicon Symposia 1966, Mediad, 1967, p 526-523.

(101) Jacobs, M. B., "The Analytical Chemistry of Industrial Poisons, Hazards and Solvents", Interscience, N.Y. (1949).

(102) Pare, J. P., JAPCA 16, #6, 325-7 (1966).

(103) Budd, J. and Bewick, H. A., Anal. Chem 23, 1536 (1952).

(104) Marbach, E. P. and Doty, D. M., J. Agr and Food Chem., 4, 881 (1956).

(105) Hochheiser, S. and Elfers, L. A., "Automatic Sequential Sampling of Atmospheric H_2S by Chemisorption on Mercuric Chloride-Treated Paper Tape", Environ. Sci. Technol. 4, #8, 672-6 (1970).

(106) Sensenbaugh, J. D. and Hemeon, W.C.L., Air Repair 4, 1 (1954).

(107) Shikiya, J. M. and MacPhee, R. D., "Multi-Instrument Performance Evaluation of Conductivity-Type Sulfur Dioxide Analyzers", JAPCA 19, #12, 943-45 (1969).

(108) Intersociety Committee, Health Laboratory Sci, 7, #4 (Oct. 1970).

(109) Risk, J. B. and Murray, F. E., Can. Pulp and Paper Ind., 17 #10, 31-34 (1964).

(110) Okita, T., et. al., "Filter Method for the Measurement of Atmospheric Hydrogen Sulfide", Environ. Sci. Technol 5, #6, 532-4 (1971).

(111) Lodge, J. P., et. al., Amer Ind Hyg. Assoc. J., 24, 380 (1963).

(112) Sanderson, H. P., et. al., "Limitations of the Lead Acetate Impregnated Paper Tape Method for Hydrogen Sulfide", JAPCA 16, #6, 328-30 (1966).

(113) High, M. D. and Horstman, S. W., "Field Experience in Measuring Hydrogen Sulfide", Am Ind Hyg Assoc J. 26, #4, 366-73 (1965).

(114) Intersociety Committee, Health Laboratory Sci. 6, #4, (Oct. 1969).

(115) Adams, D. F., "Tentative Method of Analysis for Hydrogen Sulfide Content of the Atmosphere", Health Lab Sci 7, #3, 157-63 (1970).

(116) Bostrom, C. E. and Brosset, C., "A Method for Simultaneous Determination of H_2S and SO_2 in Flue Gases", in "Atmospheric Environment" Pergamon Press Vol 3, p 407-16 (1969) Great Britain.

(117) Gaeke, G. C. and West, P. W., Anal Chem 28, 1816-19 (1956).

(118) Sliwinske, R. A. and Doty, D. M., Agr. Food Chem 6, 41 (1958).

(119) Jacobs, M. B., et. al., Anal. Chem. 29, 1349 (1957).

(120) Mecklenburg, W. and Rozenkranzer, R., A. Anorg Chem 86, 143 (1914).

(121) Almy, L. H., J Am Chem Soc., 47, 1381 (1925).

(122) Sheppard, S. E. and Hudson, J. H., Ind. Eng. Chem., Anal. Ed. 2, 73 (1930).

(123) Moore, H., Helwig, H. H. and Graul, R. J., Ind. Hyg. J. 21, 466 (1960).

(124) Bamesberger, W. L. and Adams, D. F., Environ. Sci and Tech. 3, 258 (1969).

(125) Stern, A. C. (Editor), "Air Pollution", Vol II (1968), Academic Press, N.Y., Chap. 17: "Analysis of Inorganic Gaseous Pollutants".

(126) Bulletin No. 101, RPC Corporation, El Segundo, Calif.

(127) Hodgeson, J. A., et. al., "Application of Chemiluminescence Detector for the Measurement of Total Oxides of Nitrogen and Ammonia in the Atmosphere", EPA Tech. Center.

(128) Hodgeson, J. A., et. al., Anal. Chem. 43, 1123 (1971).

(129) Parts, L. P., et. al., "Instrumentation for the Determination of Nitrogen Oxides Content of Stationary Source Emissions", Interim Report Contract No. EHSD 71-30 for Air Pollution Control Office of EPA, Durham, N.C.

(130) Fontijn, A. and Ronco, R. J., Aerochem Research Labs, Princeton, N.J., EPA, APCO Contract No. 70-79 (1971).

(131) Ballard, L. F. and Decker, C., Research Triangle Institute, Research Triangle Park, N.C., EPA Contract No. 70-101 (1971).

(132) Stedman, D. H., et. al., Publication Preprint, Ford Research, Dearborn, Michigan.

(133) Comberiati, J. R., "Application of Rapid Spectrometry to Air Pollution Research", Anal Chem 43, #11, 1497-9 (Sept. 1971).

(134) Wronski, M., Z. Anal Chem. 180, 185 (1961).

(135) Andrew, T. R. and Nichols, P.N.R., "The Determination of Hydrogen Sulfide in the Atmosphere", Analyst 90 (1071) 367-70 (1965).

(136) Hardwick, B. A., et. al., "A Fluorometric Method for Determining Low Concentrations of Hydrogen Sulfide in Air", Atmos. Environ 4, #4, 379-85 (1970).

(137) Thoen, G. N. and Nicholson, D. C., "Infrared Analysis of Kraft Pulping Process Gases", TAPPI 53, #2, 224-6 (1970).

(138) Hanst, P. L. and Morreal, J. A., "Detection and Measurement of Air Pollutants by Absorptions of Infrared Radiation", JAPCA, 18, #11, 754-9 (1968).

(139) Falgout, D. A. and Harding, C. I., "Determination of H_2S Exposure by Dynamic Sampling with Metallic Silver Filters", JAPCA 18, #1, 15-20 (1968).

(140) Drott, J., Arkiv for Kemi, 15, 14 (1960).

(141) Sullivan, J. L., "An Investigation of Air Pollution Problems in the South Auckland Area", R. E. Owens, Govt. Printer, Wellington, New Zealand.

(142) Lilienfield, S. and White, C. E., JACS 52, 886 (1930).

(143) Ricca, P. M., "The Effect of Temperature and Humidity on the Odor Threshold of Hydrogen Sulfide Gas", Masters' Thesis, Univ. of Florida.

(144) Karasek, F. W., "A Drift-Mass Spectrometer", Research Development Pg. 26 (Dec. 1970).

(145) Karasek, F. W., Research Development 21, 34 (1970).

(146) Bialkowsky, H. W., DeHaas, G. G., "Catalytic Oxidation Procedure for Determining Sulfur Compounds in Kraft Mill Gases", Pulp and Paper Mag. Canada 53 (11) 100-(1952).

(147) Leithe, W., "The Analysis of Air Pollutants" (Stuttgart 1968, Transl. 1970 by Ann Arbor-Humphrey Science Publishers, Inc.)

☆U.S. Government Printing Office: 1972--746-763/4109 Region No. 4