United States
Environmental Protection
Agency

EPA-600/7-86-012a

April 1986

EPA

Research and Development

ENVIRONMENTAL ASSESSMENT
OF A COAL/WATER SLURRY FIRED
INDUSTRIAL BOILER
Volume I. Technical Results

Prepared for

Office of Air Quality Planning and Standards

Prepared by

Air and Energy Engineering Research
Laboratory
Research Triangle Park NC 27711

RESEARCH REPORTING SERIES

Research reports of the Office of Research and Development, U.S. Environmental Protection Agency, have been grouped into nine series. These nine broad categories were established to facilitate further development and application of environmental technology. Elimination of traditional grouping was consciously planned to foster technology transfer and a maximum interface in related fields. The nine series are:

1. Environmental Health Effects Research
2. Environmental Protection Technology
3. Ecological Research
4. Environmental Monitoring
5. Socioeconomic Environmental Studies
6. Scientific and Technical Assessment Reports (STAR)
7. Interagency Energy-Environment Research and Development
8. "Special" Reports
9. Miscellaneous Reports

This report has been assigned to the INTERAGENCY ENERGY-ENVIRONMENT RESEARCH AND DEVELOPMENT series. Reports in this series result from the effort funded under the 17-agency Federal Energy/Environment Research and Development Program. These studies relate to EPA's mission to protect the public health and welfare from adverse effects of pollutants associated with energy systems. The goal of the Program is to assure the rapid development of domestic energy supplies in an environmentally-compatible manner by providing the necessary environmental data and control technology. Investigations include analyses of the transport of energy-related pollutants and their health and ecological effects; assessments of, and development of, control technologies for energy systems; and integrated assessments of a wide range of energy-related environmental issues.

EPA REVIEW NOTICE

This report has been reviewed by the participating Federal Agencies, and approved for publication. Approval does not signify that the contents necessarily reflect the views and policies of the Government, nor does mention of trade names or commercial products constitute endorsement or recommendation for use.

This document is available to the public through the National Technical Information Service, Springfield, Virginia 22161.

EPA-600/7-86-012a
April 1986

ENVIRONMENTAL ASSESSMENT OF A COAL/WATER SLURRY FIRED INDUSTRIAL BOILER

Volume I
Technical Results

By

D. Van Buren and L. R. Waterland
Acurex Corporation
Energy & Environmental Division
555 Clyde Avenue
P.O. Box 7555
Mountain View, California 94039

EPA Contract No. 68-02-3188

EPA Project Officer: J. A. McSorley
Air and Energy Engineering Research Laboratory
Research Triangle Park, North Carolina 27711

For

U.S. ENVIRONMENTAL PROTECTION AGENCY
Office of Research and Development
Washington, DC 20460

ACKNOWLEDGEMENTS

The authors wish to extend their gratitude to R. Perkins and S. Hodorowski of the E. I. du Pont de Nemours & Company and R. Manfred of the Electric Power Research Institute. Their interest and cooperation in this test program and their efforts in arranging the opportunity to test the unit are gratefully acknowledged. Special recognition is also extended to the Acurex field test team of B. C. Daros, S. Smith, M. Murray, P. Kaufmann, and K. Brewster.

CONTENTS

	Acknowledgements	ii
	Figures	iv
	Tables	v
1	Introduction	1-1
2	Source Description and Operation and Test Protocol	2-1
	2.1 Boiler Description and Operation	2-1
	2.2 Test Protocol	2-4
3	Test Results	3-1
	3.1 Criteria Pollutant and Other Gas Phase Species Emission Results	3-1
	3.2 Trace Element Emission Results	3-5
	3.3 Organic Emission Results	3-6
	3.3.1 TCO, GRAV, GC/MS, and IR Analyses of Sample Total Extracts	3-9
	3.3.2 Volatile Organic Compound Emissions	3-12
4	Environmental Assessment	4-1
	4.1 Discharge Assessment	4-1
	4.2 Bioassay Results	4-2
	4.3 Summary	4-4
5	Test Quality Assurance Activities	5-1
	5.1 C_1 to C_6 Hydrocarbon Analysis Precision	5-1
	5.2 Total Chromotographable Organic (TCO) Analysis Precision	5-4
	Appendix A	A-1
	Appendix B	B-1

FIGURES

Number		Page
A-1	Continuous Monitoring System.	A-2
A-2	Schematic of Particulate and SO_x Sampling Train (EPA Method 5 and 8).	A-5
A-3	SASS Train Schematic.	A-7
A-4	Flue Gas Analysis Protocol for SASS Samples	A-8
A-5	Flue Gas Analysis Protocol.	A-9
A-6	Organic Analysis Methodology.	A-11
A-7	N_2O Sampling System	A-12
A-8	Schematic of Volatile Organic Sampling Train (VOST) . . .	A-14

TABLES

Number		Page
1-1	Completed Tests During the Current Program	1-4
2-1	Boiler Operating Conditions	2-2
2-2	CWS Fuel Composition	2-3
3-1	Criteria Pollutant and Other Gas Species Emissions. . . .	3-2
3-2	Particle Size Distribution.	3-4
3-3	Particulate Carbon and Hydrogen Content	3-4
3-4	Sulfur Mass Balance	3-5
3-5	Flue Gas Trace Element Emissions	3-7
3-6	Trace Element Mass Balance Results	3-8
3-7	Compounds Sought in the GC/MS Analysis and Their Detection Limits (ng/μl Injected)	3-10
3-8	Summary of Total Organic Emissions	3-11
3-9	Summary of IR Spectra of SASS Sample Total Extracts . . .	3-13
3-10	Semivolatile Organic Priority Pollutant Emissions (μg/dscm)	3-13
3-11	Stack Gas Volatile Organic Compound Concentrations . . .	3-14
4-1	Flue Gas Pollutants Emitted at Levels Exceeding 10 Percent of Their Occupational Exposure Guideline . . .	4-3
4-2	Bioassay Results	4-4
5-1	Area Counts and Relative Standard Deviations for C_1 to C_6 Analyses	5-2

SECTION 1

INTRODUCTION

This report describes and presents results of environmental assessment tests performed for the Air and Energy Engineering Research Laboratory/ Research Triangle Park (AEERL/RTP) of the Environmental Protection Agency (EPA) under the Combustion Modification Environmental Assessment (CMEA) program, EPA Contract No. 68-02-3188. The CMEA started in 1976 with a 3-year study (NO_x EA), EPA Contract No. 68-02-2160, having the following four objectives:

- Indentify potential multimedia environmental effects of stationary combustion sources and combustion modification technology
- Develop and document control application guidelines to minimize these effects
- Identify stationary source and combustion modification R&D priorities
- Disseminate program results to intended users

During the first year of the NO_x EA, data for the environmental assessment were compiled and methodologies developed. Furthermore, priorities for the schedule and level of effort for the various source/fuel/control combinations were identified. This effort revealed major data gaps, particularly for noncriteria pollutants (organic emissions and

trace elements) for virtually all combinations of stationary combustion sources and combustion modification techniques. Consequently, a series of seven environmental field test programs were undertaken to fill these data gaps. The results of these tests are documented in seven individual reports (Ref. 1-1 through 1-7) and in the NO_x EA final report summarizing the entire 3-year effort (Ref. 1-8).

The current CMEA program has as its major objective the continuation of multimedia environmental field tests initiated in the original NO_x EA program. These tests, using standardized Level 1 sampling and analytical procedures (Ref. 1-9) are aimed at filling the remaining data gaps and addressing the following priority needs:

- Advanced NO_x controls
- Alternate fuels
- Secondary sources
- EPA program data needs
  - -- Residential oil combustion
  - -- Wood firing in residential, commercial, and industrial sources
  - -- High interest emissions determination (e.g., listed and candidate hazardous air pollutant species)
- Nonsteady-state operations

Coal/water slurries (CWS) have received attention in recent years as an alternative to oil fuels. CWS has the advantage of allowing certain oil-fired boilers to eliminate their oil requirements without completely redesigning the boiler. Thus, CWS has a potential for conversion of some existing industrial oil-burning facilities to coal firing and thereby

offsetting higher oil prices and frequently uncertain supply situations.

In response to the need for environmental data on burning CWS, as well as other coal-liquid mixtures such as coal/oil/water (COW) and coal/oil mixtures (COM), tests of two COW-fired firetube industrial boilers (Ref. 1-10 and 1-11), a COM-fired watertube boiler (Ref. 1-12), and two CWS-fired watertube industrial boilers (this report and Ref. 1-13) have been performed. This report presents the results of the emissions assessment of a CWS-fired industrial boiler. The boiler tested was retrofit to burn CWS under an Electric Power Research Institute (EPRI) sponsored project to demonstrate the feasibility of modifying an oil-fired boiler to use CWS. The tests described in this report evaluated flue gas emissions from the retrofit unit under typical routine operating conditions while firing CWS.

Table 1-1 lists all tests performed to date in the CMEA effort and outlines the source, fuel, combustion modifications, and level of sampling and analysis in each case. Results of these test programs are discussed in separate reports.

TABLE 1-1. COMPLETED TESTS DURING THE CURRENT PROGRAM[a]

Source	Description	Test points unit operation	Sampling protocol	Test collaborator
Spark-ignited, natural-gas-fueled reciprocating internal combustion engine	Large bore, 6-cylinder, opposed piston, 186-kW (250 Bhp)/cyl, 900-rpm Model 38TDS8-1/8	-- Baseline (pre-NSPS) -- Increased air-fuel ratio aimed at meeting proposed NO_x NSPS of 700 ppm corrected to 15 percent O_2 and standard atmospheric conditions	Engine exhaust: -- SASS -- Method 5 -- Gas sample (C_1-C_6 HC) -- Continuous NO, NO_x, CO, CO_2, O_2, CH_4, TUHC Fuel Lube oil	Fairbanks Morse Division of Colt Industries
Compression ignition, diesel-fueled, reciprocating internal combustion engine	Large bore, 6-cylinder opposed piston, 261-kW (350 Bhp)/cyl, 900-rpm Model 38TDD8-1/8	-- Baseline (pre-NSPS) -- Fuel injection retard aimed at meeting proposed NO_x NSPS of 600 ppm corrected to 15 percent O_2 and standard atmospheric conditions	Engine exhaust: -- SASS -- Method 8 -- Method 5 -- Gas sample (C_1-C_6 HC) -- Continuous NO, NO_x, CO, CO_2, O_2, CH_4, TUHC Fuel Lube oil	Fairbanks Morse Division of Colt Industries
Low-NO_x, residential, condensing-heating system furnished by Karlsons Blueburner Systems Ltd. of Canada	Residential hot water heater equipped with M.A.N. low-NO_x burner, 0.55 ml/s (0.5 gal/hr) firing capacity, condensing flue gas	Low-NO_x burner design by M.A.N.	Furnace exhaust: -- SASS -- Method 5 -- Method 8 -- Gas sample (C_1-C_6 HC) -- Continuous NO, NO_x, CO, CO_2, O_2, CH_4, TUHC Fuel Waste water	New test
Rocketdyne/EPA low-NO_x residential forced warm air furnace	Residential warm air furnace with modified high-pressure burner and firebox, 0.83 ml/s (0.75 gal/hr) firing capacity	Low-NO_x burner design and integrated furnace system	Furnace exhaust: -- SASS -- Method 5 -- Controlled condensation -- Method 8 -- Gas sample (C_1-C_6 HC) -- Continuous NO, NO_x, CO, CO_2, O_2, CH_4, TUHC Fuel	New test

(continued)

TABLE 1-1. (continued)

Source	Description	Test points unit operation	Sampling protocol	Test collaborator
Pulverized coal-fired utility boiler, Conesville station	400-MW tangentially fired; new NSPS design aimed at meeting 301 ng/J NO_x emission limit	ESP inlet and outlet, one test	ESP inlet and outlet -- SASS -- Method 5 -- Controlled condensation -- Gas sample (C_1-C_6 HC) -- Continuous NO, NO_x, CO, CO_2, O_2 Coal Bottom ash ESP ash	Exxon Research and Engineering (ER&E) conducting corrosion tests
Nova Scotia Technical College industrial boiler	1.14 kg/s steam (9,000 lb/hr) firetube fired with a mixture of coal/oil/water (COW)	-- Baseline (COW) -- Controlled SO_2 emissions with limestone injection	Boiler outlet -- SASS -- Method 5 -- Method 8 -- Controlled Condensation -- Gas sample (C_1-C_6 HC) -- Continuous O_2, CO_2, CO, NO_x Fuel	Envirocon performed particulate and sulfur emission tests
Adelphi University industrial boiler	1.89 kg/s steam (15,000 lb/hr) hot water firetube fired with a mixture of coal/oil/water (COW)	-- Baseline (COW) -- Controlled SO_2 emissions with soda ash (Na_2CO_3) injection	Boiler outlet -- SASS -- Method 5 -- Method 8 -- Controlled Condensation -- Gas Sample (C_1-C_6 HC) -- Continuous O_2, CO_2, NO_x, SO_2, CO Fuel	Adelphi University
Pittsburgh Energy Technology Center (PETC) industrial boiler	3.03 kg/s steam (24,000 lb/hr) watertube fired with a mixture of coal/oil (COM)	-- Baseline test only with COM	Boiler outlet -- SASS -- Method 5 -- Controlled Condensation -- N_2O grab sample -- Continuous O_2, CO_2, NO_x, CO, TUHC Fuel	PETC and General Electric (GE)

(continued)

TABLE 1-1. (continued)

Source	Description	Test points unit operation	Sampling protocol	Test collaborator
TOSCO Refinery vertical crude oil heater	2.54 Ml/day (16,000 bbl/day) natural draft process heater burning oil/refinery gas	-- Baseline -- Staged combustion using air injection lances	Heater outlet -- SASS -- Method 5 -- Controlled condensation -- Gas sample (C_1-C_6 HC) -- N_2O grab sample -- Continuous O_2, NO_x, CO, CO_2, HC Fuel oil Refinery gas	KVB coordinating the staged combustion operation and continuous emission monitoring
Mohawk-Getty Oil industrial boiler	8.21 kg/s steam (65,000 lb/hr) watertube burning a mixture of refinery gas and residual oil	-- Baseline -- Ammonia injection using the noncatalytic Thermal $DeNO_x$ Process	Economizer outlet -- SASS -- Method 5, 17 -- Controlled condensation -- Gas Sample (C_1-C_6 HC) -- Ammonia emissions -- N_2O grab sample -- Continuous O_2, NO_x, CO, CO_2 Fuels (refinery gas and residual oil)	Mohawk-Getty Oil
Industrial boiler	2.52 kg/s steam (20,000 lb/hr) watertube burning wood waste	-- Baseline (dry wood) -- Green wood	Boiler outlet -- SASS -- Method 5 -- Controlled condensation -- Gas sample (C_1-C_6 HC) -- Continuous O_2, NO_x, CO Fuel Flyash	North Carolina Department of Natural Resources, EPA IERL-RTP
Industrial boiler	3.16 kg/s steam (29,000 lb/hr) firetube with refractory firebox burning wood waste	-- Baseline (dry wood)	Outlet of cyclone particulate collector -- SASS -- Method 5 -- Controlled condensation -- Gas sample (C_1-C_6 HC) -- Continuous O_2, NO_x, CO Fuel Bottom ash	North Carolina Department of Natural Resources, EPA IERL-RTP

(continued)

TABLE 1-1. (continued)

Source	Description	Test points unit operation	Sampling protocol	Test collaborator
Enhanced oil recovery steam generator	15-MW (50 million Btu/hr) steam generator burning crude oil equipped with an MHI low-NO_x burner	-- Performance mapping -- Low-NO_x operation	Steamer outlet: -- SASS -- Method 5 -- Method 8 -- Gas sample (C_1-C_6 HC) -- Continuous O_2, NO_x, CO, CO_2 -- N_2O grab sample Fuel	Getty Oil Company, CE-Natco
Pittsburgh Energy Technology Center (PETC) industrial boiler	3.03 kg/s steam (24,000 lb/hr) watertube fired with a coal/water slurry (CWS)	-- Baseline test only with CWM	Boiler outlet: -- SASS -- Method 5 -- Method 8 -- Gas sample (C_1-C_6 HC) -- Continuous O_2, NO_x, CO, CO_2, TUHC -- N_2O grab sample Fuel Bottom ash Collector hopper ash	PETC and General Electric
Spark-ignited, natural gas-fired reciprocating internal combustion engine -- nonselective NO_x reduction catalyst	610-kW (818-hp) Waukesha rich-burn engine equipped with DuPont NSCR system	-- Low NO_x (with catalyst) -- 15-day emissions monitoring	Catalyst inlet and outlet -- SASS -- NH_3 -- HCN -- N_2O grab sample -- Continuous O_2, CO_2, NO_x TUHC Lube oil	Southern California Gas Company
Industrial boiler	180 kg/hr steam (400 lb/hr) stoker, fired with a mixture of coal and waste plastic beverage containers	-- Baseline (coal) -- Coal and plastic waste	Boiler outlet -- SASS -- VOST -- Method 5 -- Method 8 -- HCl -- Continuous O_2, NO_x, CO, CO_2, TUHC -- N_2O grab sample Fuel Bottom ash Cyclone ash	Vermont Agency of Environmental Conservation

(continued)

TABLE 1-1. (continued)

Source	Description	Test points unit operation	Sampling protocol	Test collaborator
Industrial boiler	7.6 kg/s steam (60,000 lb/hr) watertube retrofit for coal/water slurry (CWS) firing	-- Baseline test with CWS -- 30-day emissions monitoring	Boiler outlet -- SASS -- VOST -- Method 5 -- Method 8 -- Gas sample (C_1-C_6 HC) -- N_2O grab sample -- Continuous NO_x, CO, CO_2, O_2, TUHC, SO_2 Fuel	EPRI, DuPont
Enhanced oil recovery steam generator	15-MW (50 million Btu/hr) steam generator burning crude oil, equipped with the EPA/EER low-NO_x burner	-- Low NO_x (with burner) -- 30-day emissions monitoring	Steamer outlet -- SASS -- VOST -- Method 5 -- Method 8 -- Controlled condensation -- Anderson impactor -- Gas sample (C_1-C_6 HC) -- N_2O grab sample -- Continuous NO_x, CO, CO_2, O_2, SO_2 Fuel	Chevron U.S.A., EERC
Spark-ignited natural-gas-fired reciprocating internal combustion engine -- selective NO_x reduction catalyst	1,490-kW (2,000-hp) Ingersoll-Rand lean-burn engine equipped with Englehard SCR system	-- Low NO_x (with catalyst) -- 15-day emissions monitoring	Catalyst inlet and outlet -- SASS -- VOST -- NH_3 -- HCN -- N_2O grab sample -- Continuous O_2, CO_2, CO, NO, NO_x, NO_x+NH_3 Lube oil	Southern California Gas Company

[a]Acronyms used in the table: EERC, The Energy and Environmental Research Corporation; EPA IERL-RTP, The Environmental Protection Agency's Industrial Environmental Research Laboratory-Research Triangle Park; EPRI, The Electric Power Research Institute; HC, hydrocarbons; NSCR, nonselective catalytic reduction; NSPS, new source performance standard; SASS, source assessment sampling system; SCR, selective catalytic reduction; TUHC, total unburned hydrocarbon; VOST, volatile organic sampling train

REFERENCES FOR SECTION 1

1-1. Larkin, R., and E. B. Higginbotham, "Combustion Modification Controls for Stationary Gas Turbines: Volume II. Utility Unit Field Test," EPA-600/7-81-122b, NTIS PB 82-226473, July 1981.

1-2. Higginbotham, E. B., "Combustion Modification Controls for Residential and Commercial Heating Systems: Volume II. Oil-fired Residential Furnace Field Test," EPA-600/7-81-123b, NTIS PB 82-231176, July 1981.

1-3. Higginbotham, E. B., and P. M. Goldberg, "Combustion Modification NO_x Controls for Utility Boilers: Volume I. Tangential Coal-fired Unit Field Test," EPA-600/7-81-124a, NTIS PB 82-227265, July 1981.

1-4. Sawyer, J. W., and E. B. Higginbotham, "Combustion Modification NO_x Controls for Utility Boilers: Volume II. Pulverized-Coal Wall-fired Unit Field Test," EPA-600/7-81-124b, NTIS PB 82-227273, July 1981.

1-5. Sawyer, J. W., and E. B. Higginbotham, "Combustion Modification NO_x Controls for Utility Boilers: Volume III. Residual-Oil Wall-Fired Unit Field Test," EPA-600/7-81-124c, NTIS PB 82-227281, July 1981.

1-6. Goldberg, P. M., and E. B. Higginbotham, "Industrial Boiler Combustion Modification NO_x Controls: Volume II. Stoker Coal-Fired Boiler Field Test -- Site A," EPA-600/7-81-126b, NTIS PB 82-231085, July 1981.

1-7. Lips, H. I., and E. B. Higginbotham, "Industrial Boiler Combustion Modification NO_x Control: Volume III. Stoker Coal-Fired Boiler Field Test -- Site B," EPA-600/7-81-126c, NTIS PB 82-231093, July 1981.

1-8. Waterland, L. R., et al., "Environmental Assessment of Stationary Source NO_x Control Technologies -- Final Report," EPA-600/7-82-034, NTIS PB 82-249350, May 1982.

1-9. Lentzen, D. E., et al., "IERL-RTP Procedures Manual: Level 1 Environmental Assessment (Second Edition)," EPA-600/7-78-201, NTIS PB 293795, October 1978.

1-10. Castaldini, C., "Environmental Assessment of an Industrial Boiler Burning Coal/Oil/Water Mixture," Acurex Draft Report TR-81-86/EE, August 1984.

1-11. DeRosier, R., "Environmental Assessment of a Firetube Boiler Firing Coal/Oil/Water Mixtures," EPA 600/7-84-095a/b, September 1984.

1-12. DeRosier, R., "Environmental Assessment of a Watertube Boiler Firing a Coal/Oil Mixture," Acurex Draft Report TR-81-87/EE, March 1984.

1-13. DeRosier, R. and L. R. Waterland, "Environmental Assessment of a Watertube Boiler Firing a Coal/Water Slurry," EPA 600/7-86-004a/b, January 1985.

SECTION 2

SOURCE DESCRIPTION AND OPERATION AND TEST PROTOCOL

As part of EPRI's CWS demonstration program, an oil-fired industrial boiler was retrofit to fire CWS, and a 35-day demonstration burn involving two CWS formulations was performed (EPRI project RP-1895-7). The tests reported herein were performed during the demonstration burn period.

2.1 BOILER DESCRIPTION AND OPERATION

The tests were performed on a Babcock and Wilcox integral furnace, bent tube boiler rated at 7.6 kg steam/s (60,000 lb/hr) at 1.2 MPa (175 psig) located at the Memphis, Tennessee, plant of the E. I. du Pont de Nemours & Company. The unit was orginally designed to fire distillate fuel oil, process gas, and natural gas. It had been previously modified to accommodate residual fuel oil, and most recently modified to burn a coal/water slurry (CWS).

During the comprehensive emissions testing on August 25, 1983, three burners (burners 2, 3, and 4) of the available five were fired with CWS. In addition to the CWS, a small amount of natural gas was fired into the direct air preheater and through burner 4. The CWS fired was an Atlantic Research Corporation formulation (ARC-coal).

Table 2-1 summarizes the boiler operating data during the test. As shown in the table, a portion of the heat input was from the natural gas. Based on a CWS heating value of 34.37 MJ/kg (14,810 Btu/lb), a specific

TABLE 2-1. BOILER OPERATING CONDITIONS

Parameter	Range	Average
Steam flow, kg/s (10^3 lb/hr)	6.89 to 7.13 (54.6 to 56.5)	7.01 (55.5)
Steam pressure, MPa (psig)	1.19 to 1.21 (173 to 176)	1.21 (175)
CWS flow, l/s (gpm)[a]	0.60 to 0.61 (9.5 to 9.7)	0.61 (9.6)
Natural gas flow to burner No. 4, scm/min (10^3 scfh)	1.39 to 1.79 (2.94 to 3.79)	1.48 (3.14)
Natural gas flow to air heater, scm/min (10^3 scfh)	1.58 to 1.76 (3.35 to 3.73)	1.68 (3.55)
Inlet air temperature, °C (°F)	29 to 39 (85 to 102)	36 (96)
Windbox air temperature, °C (°F)	274 to 283 (525 to 542)	279 (535)
Windbox air pressure, kPa (in. WC)	279 (11.2)	279 (11.2)
CWS heater temperature, °C (°F)	37 to 38 (98 to 101)	38 (100)
CWS strainer discharge pressure, MPa (psig)	1.35 to 1.38 (196 to 200)	1.37 (198)
Feedwater temperature, °C (°F)	129 (265)	129 (265)
Stack gas temperature, °C (°F)	293 to 304 (559 to 580)	299 (571)
Atomizing air pressure, MPa (psig)		
Burner No. 2	1.41 to 1.42 (204 to 206)	1.42 (206)
Burner No. 3	1.42 to 1.43 (206 to 208)	1.43 (208)
Burner No. 4	1.41 to 1.42 (204 to 206)	1.42 (206)
CWS burner pressure, MPa (psig)		
Burner No. 2	1.13 to 1.16 (164 to 168)	1.14 (166)
Burner No. 3	1.12 to 1.14 (162 to 166)	1.14 (165)
Burner No. 4	1.16 to 1.23 (168 to 179)	1.21 (176)
Furnace pressure, Pa (in. WC)	-77 to -37 (-0.31 to -0.15)	-60 (-0.24)
Excess air (percent)[b]		45
Boiler efficiency (percent)[c]		72

[a]Average of two flowmeters installed; one magnetic and one mass
[b]Calculated from flue gas composition
[c]Calculated using "ASME test form for abbreviated efficiency test"

TABLE 2-2. CWS FUEL COMPOSITION[a]

Component	Percent by weight (dry basis unless noted)
Moisture[b]	29.7
Solids[b]	70.3
Carbon	83.3
Hydrogen	5.1
Oxygen[b,c]	5.0
Nitrogen	1.4
Sulfur	0.61
Ash	4.6
Higher heating value, MJ/kg (Btu/lb)	34.374 (14,810)

[a]Ref. 2-1
[b]As fired
[c]By difference

gravity of 1.20 (10.0 lb/gal), a moisture content of 29.7 percent, and a natural gas fuel value of 36.9 MJ/scm (991 Btu/scf), the average heat input was about 90 percent from the CWS and 10 percent from the natural gas. Table 2-2 summarizes the CWS composition as reported by DuPont (Ref. 2-1). The boiler efficiency, calculated using the ASME heat loss method, of 72 percent, as shown in Table 2-1, is slightly lower than the average efficiency of 73.7 percent determined by DuPont personnel during subsequent days of the test burn.

2.2 TEST PROTOCOL

The sampling matrix for the comprehensive tests consisted of:

- Fuel grab sample
- Flue gas:
  - -- Continuous monitors for O_2, CO_2, CO, NO_x, and total unburned hydrocarbon (TUHC)
  - -- Volatile organic sampling train (VOST) sampling
  - -- Source assessment sampling system (SASS) sampling
  - -- Combined EPA Method 5/8 sampling for particulate and sulfur oxides
  - -- Gas grab sampling for onsite determination of C_1 to C_6 hydrocarbons by gas chromatography/flame ionization detector (GC/FID)
  - -- Gas grab sampling for N_2O determination

All flue gas sampling was performed in a vertical section of breeching located downstream of the boiler's induced draft fan, but upstream of the breeching transition section to the stack. Details of the specific sampling protocols used are given in Appendix A.

The analysis protocol for collected samples included:

- Analyzing fuel and SASS train samples for 73 trace elements using spark source mass spectrometry (SSMS) supplemented by atomic absorption spectrometry (AAS) and other methods
- Analyzing VOST traps for the volatile organic priority pollutants in accordance with the VOST protocol (Ref. 2-2)

- Analyzing SASS train organic extract samples for total organic content in two boiling point ranges: 100° to 300°C by total chromatographable organics (TCO) analysis, and >300°C by gravimetry (GRAV)
- Performing infrared spectrometry (IR) analysis of the GRAV residue of all organic extract samples
- Analyzing the SASS train sorbent module extract in accordance with EPA Method 625 for the semivolatile organic priority pollutants, a set which includes many polynuclear aromatic hydrocarbon (PAH) compounds
- Performing mutagenicity and cytotoxicity bioassay testing of SASS train samples

This sampling and analysis matrix conforms to a modified and extended EPA Level 1 protocol (Ref. 2-3).

REFERENCES FOR SECTION 2

2-1. Perkins, R. P., "Coal/Water Slurry Test in an Industrial Boiler," Final Report to the Electric Power Research Institute, EPRI Project RP-1895-7, November 1984.

2-2. Hansen, E. M., "Protocol for the Collection and Analysis of Volatile POHC's using VOST," EPA-600/8-84-007, NTIS PB84-170042, March 1984.

2-3. Lentzen, D. E., et al., "IERL-RTP Procedures Manual: Level 1 Environmental Assessment (Second Edition)", EPA 600/7-78-201, NTIS PB293795, October 1978.

SECTION 3

TEST RESULTS

The objective of this test program was to measure flue gas emissions from the coal/water slurry-fired boiler tested at the Memphis plant of the E. I. du Pont de Nemours & Company. The tests were performed in conjunction with an EPRI-sponsored CWS demonstration burn program which sought to establish the operational feasibility of using CWS in an industrial boiler originally designed to fire liquid fuels. Succeeding discussion of the test results has been arranged by pollutant grouping. Criteria pollutant and other gas phase species emissions are discussed in Section 3.1, inorganic trace element emissions in Section 3.2, and organic emissions in Section 3.3. Section 4 presents an environmental assessment of the emissions and the results of biological testing of the samples collected.

3.1 CRITERIA POLLUTANT AND OTHER GAS PHASE SPECIES EMISSION RESULTS

Table 3-1 summarizes gaseous compound and particulate emissions measured during the test. As shown in the table, NO_x and CO emissions averaged about 400 to 220 ppm as measured, respectively, or 510 and 285 ppm corrected to 3 percent O_2, respectively. TUHC emissions were low, in the 1 ppm range. N_2O emissions, at 54 ppm as measured or 70 ppm corrected to 3 percent O_2 were about 14 percent of the correspnding NO_x ($NO + NO_2$) emission level (N_2O does not elicit a response in the chemiluminescent technique employed by the

TABLE 3-1. CRITERIA POLLUTANT AND OTHER GAS SPECIES EMISSIONS

Component	Range (by volume as noted)	Average (by volume as noted)
Boiler outlet O_2 (percent dry, by DuPont analyzer)	6.6 to 7.0	6.8
Downstream of boiler I.D. fan, as measured by Acurex continuous gas analyzers:		
O_2 (percent dry)	6.6 to 7.4	7.0
CO_2 (percent dry)	8.9 to 9.8	9.5
CO (ppm dry)	205 to 370	222
NO_x (ppm dry)	385 to 435	397
TUHC (ppm dry)	1 to 2	1
Moisture (percent)	--[a]	7.7
SO_2 (ppm dry)	--[a]	350
SO_3 (ppm dry)	--[a]	2.0
N_2O (ppm dry)	18 to 98[b]	54

Corrected gaseous emissions	ppm[c]	ng/J[d]	lb/10^6 Btu[d]
NO_x (as NO_2)	510	443	1.03
CO	285	151	0.35
TUHC (as CH_4)	1	0.4	0.001
SO_2	450	540	1.26
SO_3	2.6	3.9	0.009
N_2O	70	57	0.13

Solid particulate mass emissions	g/dscm	μg/J	lb/10^6 Btu
Method 5	4.31	2.51	5.84
SASS	3.14	1.83	4.26

[a]Extractive sample by EPA Method 5/8 over test duration; range not applicable
[b]Range for three grab samples
[c]Corrected to 3 percent O_2, dry
[d]Heat input basis

continuous NO_x analyzer). This is at the low end of the range (about 20 percent) seen in tests of other external combustion sources (Ref. 3-1).

Solid particulate emissions as measured using EPA reference Method 5 were relatively high, at 4.31 g/dscm. However, the boiler had no particulate control device, so a relatively high emission rate would be expected. Particulate emissions as measured using the SASS train are in reasonable agreement (within 30 percent) of the reference method measurement.

The emitted particle size distribution as determined by the SASS train is given in Table 3-2. As noted, the distribution is heavily weighted to coarse particulate. Over half the particulate mass was greater than 10 μm particles; over 90 percent was greater than 3 μm particles.

The combustible content of two composite particulate fractions in terms of their carbon and hydrogen contents was measured. Results are given in Table 3-3. As shown, the carbon content of the coarse (>3 μm) particulate was quite high, over 42 percent; that of the fine (<3μm) particulate was about 13 percent. Weighting these by the size distribution data noted in Table 3-2 gives a composite particulate carbon content of about 40 percent, with hydrogen content of about 0.1 percent. This combustibles content corresponds to a heating value of about 13.7 MJ/kg (5,920 Btu/lb).

Table 3-1 also shows that SO_2 and SO_3 emissions from the boiler, as determined by Method 8, were 350 ppm and 2.0 ppm as measured, respectively, or 450 ppm and 2.6 ppm corrected to 3 percent O_2, respectively. The ratio of SO_3 to total SO_x (SO_2 + SO_3), at about 0.6 percent, is lower than the range typical for coal-fired sources (generally 2 to 5 percent). Sulfur analyses of the two SASS particulate size fractions indicated that the course (>3μm)

TABLE 3-2. PARTICLE SIZE DISTRIBUTION

Size range	Weight percent of particulate in size range
>10 μm	51.4
3 to 10 μm	40.4
1 to 3 μm	7.8
<1 μm	0.4

TABLE 3-3. PARTICULATE CARBON AND HYDROGEN CONTENT

Size range	Carbon content (weight percent)	Hydrogen content (weight percent)
>3 μm (10 μm + 3 μm cyclone catch)	42.67	0.13
<3 μm (1 μm + filter catch)	13.13	0.09
Composite	40.19	0.13

particulate contained 0.064 percent sulfur and the fine particulate contained 0.3 percent sulfur.

A sulfur mass balance based on the above is summarized in Table 3-4. As noted, boiler output sulfur (dominated by SO_2 emissions) accounted for 173 percent of input sulfur. The authors suspect that the sulfur analysis of the fuel was in error. With a fuel sulfur content of approximately 1 percent, the sulfur mass balance would close. This may have been the case. Additional separate fuel ultimate analyses also reported by DuPont had sulfur content at 0.92 percent, dry basis (Ref. 3-2). Of course, some variation in composition is possible with solid fuel samples.

3.2 TRACE ELEMENT EMISSION RESULTS

The boiler flue gas SASS train samples were analyzed for 73 trace elements using spark source mass spectrography (SSMS) supplemented by atomic absorption (AAS) for mercury, antimony, arsenic, and selected major components of samples present at levels greater than the quantitation limit

TABLE 3-4. SULFUR MASS BALANCE

Fuel sulfur content (percent, dry basis)	0.61
Sulfur input (g/s)	3.11
SO_2 emission concentration (mg/dscm)	930
emission rate (g/s as S)	5.30
SO_2 emission concentration (mg/dscm)	6.8
emission rate (g/s as S)	0.03
Composite particulate sulfur content (percent)	0.083
emission rate (g/s as S)	0.04
Total sulfur output (g/s)	5.37
Mass balance, out/in (percent)	173

of SSMS. Specific ion electrode, colorimetric, turbidimetric, or X-ray fluorescence spectrometry techniques were used for other major components in samples as appropriate. Once the trace element concentrations were determined, trace element flowrates for the flue gas vapor and condensed phases could be calculated. Appendix B presents trace element concentrations in the SASS train components and summed to give the total flue gas stream concentration as well as flowrates on a mass per time and mass per heat input basis.

Table 3-5 summarizes the total flue gas trace element concentrations for those elements present above their limit of detection. Table 3-6 presents the trace element mass balance results for the test for those elements quantitated in both the fuel and the flue gas (SASS train components). Mass balance closure for the elements noted was quite good. Of 43 elements noted in the table, only eight had outlet flowrate more than about a factor of three different from inlet flowrate. Most element balances closed within a factor of 50 percent.

3.3 ORGANIC EMISSION RESULTS

Organic analyses were performed on selected SASS samples according to an extended EPA Level 1 protocol (Ref. 3-3), as outlined in appendix A. Total volatile organics having boiling points nominally in the C_1 to C_6 range of -160° to 90°C (-256° to 194°F) were determined by onsite gas chromatographic analyses of grab samples. The SASS train particulate (in two size fractions, >3μm and <3μm), organic module sorbent (XAD-2), and organic module condensate (OMC) samples were extracted with methylene chloride in a Soxhlet apparatus. The extracts (the XAD-2 and OMC extracts were combined) were then subjected to total chromatographable organic (TCO) and gravimetric (GRAV) analyses to determine the total concentration of organics within the

TABLE 3-5. FLUE GAS TRACE ELEMENT EMISSIONS[a]

Element	Flue gas concentration (μg/dscm)	Element	Flue gas concentration (μg/dscm)
Aluminum	271,000	Magnesium	7,670
Antimony	25.6	Manganese	90
Arsenic	55.6	Mercury	0.37
Barium	1,270	Molybdenum	44.1
Beryllium	430	Neodymium	42.4
Bismuth	4.2	Nickel	1160
Boron	79.6	Niobium	58.3
Bromine	109	Phosphorus	1,850
Cadmium	<3.9	Potassium	28,000
Calcium	12,900	Praseodymium	29.1
Cerium	105	Rubidium	63.9
Cesium	7.5	Samarium	25.5
Chromium	2,260	Scandium	77.8
Cobalt	120	Selenium	31.0
Copper	329	Silicon	385,000
Dysprosium	23.9	Silver	4.1
Erbium	10.5	Sodium	47,500
Europium	3.9	Strontium	883
Gadolinium	14.7	Tantalum	6.0
Gallium	163	Tellurium	<0.4
Germanium	24	Terbium	3.6
Gold	<0.2	Thallium	3.7
Hafnium	3.6	Thorium	62
Holmium	14	Thulium	1.7
Iodine	22	Tin	11.8
Iron	79,900	Titanium	16,700
Lanthanum	137	Tungsten	5.1
Lead	166	Uranium	39.2
Lithium	258	Vanadium	443
Lutetium	0.824	Ytterbium	5.7
		Yttrium	140
		Zinc	425
		Zirconium	164

[a] Iridium, osmium, palladium, platinum, rhenium, rhodium, and ruthenium were also analyzed for but not present above method detection limits

TABLE 3-6. TRACE ELEMENT MASS BALANCE RESULTS

	CWS fuel (μg/s)	Boiler outlet (μg/s)	Mass balance (out/in)
Aluminum	3,590,000	3,090,000	0.86
Antimony	1,020	292	0.285
Arsenic	512	634	1.24
Barium	118,000	14,500	1.23
Beryllium	4,600	4,900	1.06
Boron	4,100	907	0.221
Bromine	4,100	1,240	0.302
Calcium	138,000	148,000	1.07
Cerium	2,050	1,190	0.582
Chromium	15,900	25,700	1.62
Cobalt	1,540	1,370	0.89
Copper	4,100	3,750	0.916
Europium	154	44	0.286
Gallium	1,540	1,860	1.21
Germanium	307	275	0.89
Iodine	2,560	251	0.0978
Iron	871,000	911,000	1.05
Lanthanum	3,070	1,560	0.508
Lead	1,540	1,890	1.23
Lithium	25,600	2,940	0.115
Magnesium	102,000	87,500	0.853
Manganese	3,070	1,030	0.334
Mercury	10.2	4.24	0.414
Molybdenum	1,020	503	0.491
Nickel	1,540	13,200	8.59
Niobium	512	664	1.30
Phosphorus	236,000	21,100	0.0896
Potassium	41,000	319,000	7.78
Praseodymium	461	331	0.718
Rubidium	1,020	729	0.711
Scandium	1,540	0.887	0.577
Selenium	4,100	353	0.0861
Silicon	6,560,000	4,390,000	0.670
Sodium	35,900	541,000	15.1
Strontium	8,710	10,100	1.16

(continued)

TABLE 3-6. (continued)

	CWS fuel (μg/s)	Boiler outlet (μg/s)	Mass balance (out/in)
Thorium	2,050	700	0.34
Tin	256	134	0.523
Titanium	205,000	191,000	0.93
Uranium	1,020	447	0.436
Vanadium	4,100	5,050	1.23
Yttrium	2,050	1,600	0.778
Zinc	3,070	4,840	1.57
Zirconium	3,070	1,870	0.61

100° to 300°C (212° to 572°F), and greater than 300°C (572°F) boiling point ranges, respectively. Infrared (IR) spectra of the GRAV residues of the extracts were also obtained. In addition the SASS train extract samples were analyzed for the 58 semivolatile organic priority pollutants (a category which contains several polynuclear aromatic hydrocarbon (PAH) species) by gas chromatography/mass spectrometry (GC/MS) in accordance with EPA Method 625 (Ref. 3-4). Table 3-7 lists the compounds sought in this analysis and their method detection limits. The volatile organic sampling train (VOST) sorbent traps taken during the tests were analyzed per VOST protocol (Ref. 3-5) for the volatile organic priority pollutants by GC/MS in accordance with EPA Method 624.

Results of all these analyses are discussed in the following subsections.

3.3.1 TCO, GRAV, GC/MS, and IR Analyses of Sample Total Extracts

Table 3-8 summarizes the total organic emission results. As indicated in the table, vapor-phase hydrocarbon (C_1 to C_6) emissions averaged

TABLE 3-7. COMPOUNDS SOUGHT IN THE GC/MS ANALYSIS AND THEIR DETECTION LIMITS (ng/μl INJECTED)

Acid compounds			
2,4,6-trichlorophenol	5	2-nitrophenol	5
p-chloro-m-cresol	5	4-nitrophenol	20
2-chlorophenol	5	2,4-dinitrophenol	20
2,4-dichlorophenol	5	4,6-dinitro-o-cresol	20
2,4-dimethylphenol	5	pentachlorophenol	5
		phenol	1

Base neutral compounds			
1,2,4-trichlorobenzene	1	benzo(c)phenanthrene	40
1,2-dichlorobenzene	1	bis(2-chloroethoxy)methane	1
1,2-diphenylhydrazine (as azobenzene)	1	bis(2-chloroethyl)ether	1
		bis(2-chloroisopropyl)ether	1
1,3-dichlorobenzene	1	bis(2-ethylhexyl)phthalate	1
1,4-dichlorobenzene	1	butyl benzyl phthalate	1
2,4-dinitrotoluene	1	chrysene	1
2,6-dinitrotoluene	1	di-n-butyl phthalate	1
2-chloronaphthalene	1	di-n-octyl phthalate	1
3,3'-dichlorobenzidine	5	dibenzo(a,h)anthracene	5
3-methyl cholanthrene	40	dibenzo(c,g)carbazole	40
4-bromophenyl phenyl ether	1	diethyl phthalate	1
4-chlorophenyl phenyl ether	1	dimethyl phthalate	1
7,12-dimethyl benzo(a)anthracene	40	fluoranthene	1
N-nitrosodi-n-propylamine	5	fluorene	1
N-nitrosodimethylamine	NA	hexachlorobenzene	1
N-nitrosodiphenylamine	1	hexachlorobutadiene	1
acenaphthene	1	hexachlorocyclopentadiene	1
acenaphthylene	1	hexachloroethane	1
anthracene	1	indeno(1,2,3-cd)pyrene	5
benzo(ghi)perylene	5	isophorone	1
benzidine	20	naphthalene	1
benzo(b)fluoranthene	1	nitrobenzene	1
benzo(k)fluoranthene	1	perylene	40
benzo(a)anthracene	1	phenanthrene	1
benzo(a)pyrene	1	pyrene	1

TABLE 3-8. SUMMARY OF TOTAL ORGANIC EMISSIONS

Organic Emissions	(mg/dscm)
Total volatile organics analyzed in the field by gas chromatography:	
C_1	0.0
C_2	3.9
C_3	7.9
C_4	2.7
C_5	0.0
C_6	0.6
Total C_1-C_6	15.1
Total semivolatile organics analyzed by TCO:	
Sorbent module extract	0.05
Total C_7-C_{16}	0.05
Total nonvolatile organics analyzed by GRAV:	
Filter + 1 μm particulate	<0.3
3 μm + 10 μm particulate	<1.0
XAD-2 + organic module condensate	0.3
Total C_{16+}	0.3 to 1.6
Total organics	15.5 to 16.8

15.1 mg/dscm. These were somewhat evenly divided among the C_2, C_3, and C_4 boiling point ranges. The C_1 to C_6 fraction accounted for over 90 percent of the total organic emissions. Flue gas levels of semivolatile and nonvolatile organics (TCO + GRAV) were quite low.

Table 3-9 presents a summary of the IR spectra of the GRAV residue of each extract sample analyzed. As noted, the <3 μm particulate (1 μm + filter) extract spectrum were too weak to interpret. The spectrum of the >3 μm particulate (10 + 3 μm particulate) extract suggests only the presence of aliphatic hydrocarbons. The sorbent module extract (XAD-2 + OMC) spectrum suggests these plus some oxygenated compounds such as aldehydes and/or ketones.

Table 3-10 summarizes the results of the GC/MS analysis of the SASS train extracts. Only naphthalene was detected and only in the sorbent module extract. The noted naphthalene emission rate at less than 5 μg/dscm is quite low, in keeping with the overall low total organic content of the SASS samples.

Since no extract sample contained more than 15 mg of total organic, further Level 1 analyses, specifically liquid column (CC) chromatography separation, were not performed.

3.3.2 Volatile Organic Compound Emissions

Table 3-11 summarizes analysis results for the VOST train samples collected during the tests. As noted in the table, several chlorinated C_1 and C_2 aliphatics, chlorobenzene, benzene, and ethylbenzene were detected at levels up to about 25 μg/dscm. The levels of the aromatic hydrocarbons (benzene and ethylbenzene) noted are typical of what has been seen in recent

TABLE 3-9. SUMMARY OF IR SPECTRA OF SASS SAMPLE TOTAL EXTRACTS

SASS component	Wave number (cm^{-1})	Intensity[a]	Assignment	Possible compound categories present
1 μm + filter particulate extract	--		No peaks	
10 μm + 3 μm particulate extract	2930 2840	S M	CH alkyl CH alkyl	Aliphatic hydrocarbons
Sorbent module extract	2960 2920 2840 1740 1450 1280	M S M W W W	CH alkyl CH alkyl CH alkyl C=O stretch C-H bend C-O stretch	Aliphatic hydrocarbons, oxygenated hydrocarbons such as aldehydes and ketones

[a]S -- strong
M -- moderate
W -- weak

TABLE 3-10. SEMIVOLATILE ORGANIC PRIORITY POLLUTANT EMISSIONS (μg/dscm)

Compound	Sample			
	XAD-2 extract	Filter + 1 μm particulate extract	10 + 3 μm particulate extract	Total
Naphthalene	1.7	<0.7	<2.7	1.7 to 5.1
All other semivolatile organic priority pollutants	<0.3	<0.7	<2.7	<2.7

TABLE 3-11. STACK GAS VOLATILE ORGANIC COMPOUND CONCENTRATIONS

	Stack gas concentration[b,c] (μg/dscm)						
	Trap set 1			Trap set 3			
Compound[a]	Tenax trap	Tenax/ charcoal trap	Total	Tenax trap	Tenax/ charcoal trap	Total	Average total
Chloromethane	0.4	27.6	28	<0.3	12.8	13	21
Vinyl chloride	<0.3	5.2	5.2	<0.3	8.3	8.3	6.8
Chloroethane	<0.3	8.2	8.2	<0.3	12.9	12.9	11
1,2-dichloroethane	0.4	<0.3	0.4	<0.3	<0.3	<0.3	0.4
Benzene	20.9	<0.3	21	25.4	<0.3	25	23
Chlorobenzene	<0.3	<0.3	<0.3	1.5	<0.3	1.5	0.9
Ethylbenzene	<0.3	2.4	2.4	<0.3	1.1	1.1	1.8

[a]Bromomethane, chloroethane, methylene chloride, 1,1-dichloroethylene, 1,1-dichloroethane, t-1,2-dichloroethylene, chloroform, 1,1,1-trichloroethane, carbon tetrachloride, dichlorobromomethane, 1,2-dichloropropane, t-1,3-dichloropropene, trichloroethylene, 2-chloroethyl vinyl ether, bromoform, tetrachloroethylene, 1,1,2,2-tetrachloroethane, toluene, allyl chloride, ethylene oxide, propylene oxide, and 2-nitropropane were also analyzed for and not detected above a detection limit of 0.3 μg/dscm

[b]Field blank corrected

[c]Triplicate sets of traps samples; trap set 2 not analyzed

VOST test of combustion sources (Refs. 3-6, 3-7, and 3-8). The source of the chlorinated hydrocarbons is not clearly understood, although these compounds certainly arise whenever chlorine containing fuels are burned. Although the fuel composition cited in Table 2-2 did not note a chlorine level, other additional analysis reported by DuPont (Ref. 3-2) indicate the chlorine content of the fuel as 0.11 percent (dry basis). This level is more than sufficient to account for the levels of the chlorinated compounds noted in Table 3-11.

REFERENCES FOR SECTION 3

3-1. Waterland, L. R., et al., "Environmental Assessment of Industrial Boilers Firing Coal-Liquid Mixtures and Wood," in Proceedings of the 1982 Joint Symposium on Stationary Combustion NO_x Control Volume II, EPA-600/9-85-022b, July 1985.

3-2. Perkins, R. P., "Coal/Water Slurry Test in an Industrial Boiler," Final Report to the Electric Power Research Institute, EPRI Project RP-1895-7, November 1984.

3-3. Lentzen, D. E., et al., "IERL-RTP Procedures Manual: Level 1 Environmental Assessment (Second Edition)", EPA 600/7-78-201, NTIS PB293795, October 1978.

3-4. 44 CFR 69532, December 3, 1979.

3-5. Hansen, E. M., "Protocol for the Collection and Analysis of Volatile POHC's Using VOST," EPA-600/8-84-007, NTIS PB84-170042, March 1984.

3-6. Castaldini, C., S. Unnasch, and H. B. Mason, "Engineering Assessment of Hazardous Waste Cofiring in Industrial Boilers," Acurex Draft Report TR-84-159/EED, May 1984.

3-7. Castaldini, C., et al., "Environmental Assessment of an Enhanced Oil Recovery Steam Generator Equipped with the EPA Low NO_x Burner," Acurex Draft Report TR-85-174/EED, January 1985.

3-8. DeRosier, R., et al., "Environmental Assessment of a Commercial Boiler Fired with a Coal/Waste Plastic Mixture," Acurex Draft Report TR-85-175/EE, February 1985.

SECTION 4

ENVIRONMENTAL ASSESSMENT

This section discusses the potential environmental impact of the boiler tested and discusses the results of the bioassay testing of flue gas samples collected. As a means of ranking pollutants discharged for possible further consideration, flue gas stream pollutant concentrations are compared to occupational exposure guidelines. Biosassay analyses were conducted as a more direct measure of the potential health effects of the emission stream. Both of these analyses are aimed at identifying potential problem areas and providing the basis for ranking pollutant species and discharge streams for further consideration.

4.1 DISCHARGE ASSESSMENT

To obtain a measure of the potential significance of the discharge stream analyzed in this test program, discharge concentrations were compared to an available set of health-effects-related indices. For the flue gas discharge the indices used for comparison were occupational exposure guidelines. Two sources of such guidelines were used: the time-weighted-average threshold limit values (TLV's) defined by the American Conference of Governmental Industrial Hygienists (ACGIH) (Ref. 4-1) and 8-hour time-weighted-average exposure limits established by the Occupational Safety and Health Administration (OSHA) (Ref. 4-2).

The comparisons of the discharge stream concentrations to these indices should only be used for ranking pollutant discharge levels for further testing and analyses.

Table 4-1 lists those pollutants emitted in the flue gas at levels greater than 10 percent of their occupational exposure guideline. As noted in the table, particulate emissions were at levels over 400 times the nuisance particulate TLV. Of course the unit had no particulate control device during the demonstration burn tested, so particulate emissions were high. The other criteria pollutants, NO_x and SO_2, were emitted at levels between 130 and 190 times their respective TLV's. CO and SO_3 emissions were at levels between five and seven times their TLV's.

Table 4-1 also notes that two elements were emitted at levels over 100 times their TLV's and another eight were emitted at levels over 10 times their TLV's. However, again, these elements are associated with the flue gas particulate, emissions of which were not controlled. In fact, five of the first eight elements noted (silicon, aluminum, iron, sodium, and potassium) are major components of the coal ash (Ref. 4-3).

4.2 BIOASSAY RESULTS

Health effects bioassay tests were performed on the SASS organic sorbent (XAD-2) extract and the flue gas particulate. The bioassay tests performed (Ref. 4-3) were the Ames assay, based on the property of Salmonella typhinurium mutants to revert due to exposure to various classes of mutagens, and a cytotoxicity assay (CHO) with mammaliam cells in culture to measure cellular metabolic impairment and death resulting from exposure to soluble toxicants.

TABLE 4-1. FLUE GAS POLLUTANTS EMITTED AT LEVELS EXCEEDING 10 PERCENT OF THEIR OCCUPATIONAL EXPOSURE GUIDELINE

Pollutant	Flue gas concentration (mg/dscm)	Occupational exposure guideline[a] (mg/m^3)
Major constituents		
Particulate	4,310	10[b]
SO_2	930	5.0
SO_3	6.7	1.0
NO_x (as NO_2)	760	6.0
CO	260	55
Trace Elements		
Beryllium	0.43	0.002
Aluminum	270	2.0
Iron	80	1.0
Chromium	2.3	0.050
Silicon	385	10[b]
Sodium	48	2.0[c]
Phosphorous	1.9	0.10
Potassium	28	2.0[c]
Nickel	1.2	0.10
Lithium	0.26	0.025
Vanadium	0.44	0.050
Calcium	13	2.0
Arsenic	0.056	0.010[d]
Lead	0.17	0.050[d]
Copper	0.33	0.10[d]
Barium	1.3	0.50
Titanium	0.17	10[b]
Cobalt	0.12	0.10
Magnesium	7.7	10
Zinc	0.43	1.0
Silver	0.0041	0.010
Selenium	0.031	0.20
Bromine	0.11	0.70
Yttrium	0.14	1.0

[a]Time-weighted-averge TLV (Ref. 4-1) unless noted
[b]For nuisance particle
[c]Ceiling limit
[d]8-hr time-weighted-average OSHA exposure limit (Ref. 4-2)

Table 4-2 summarizes the results of these tests. The results suggest that the XAD-2 extract was of moderate mutagenicity and toxicity and both SASS particulate size fraction were of nondetectable mutagenicity and low toxicity. The positive responses for the sorbent module extract in the assays performed are typical of the SASS tests of combustion source flue gas. Current studies sponsored by EPA's Air and Energy Engineering Research Laboratory/Research Triangle Park are investigating whether such responses are due to artifact compounds formed when combustion gas containing NO_x is passed over XAD-2 resin.

4.3 SUMMARY

A comprehensive emissions testing program was performed on a CWS-fired industrial boiler. The slurry fired was an Altlantic Research Corporation formulation (ARC-Coal) containing about 70 percent beneficiated coal and 30 percent water.

TABLE 4-2. BIOASSAY RESULTS

Sample	Bioassay	
	Ames[a]	CHO[b]
XAD-2 extract:	M	M
<3 μm particulate (1 μm + filter)	ND	L
>3 μm particulate (3 μm + 10 μm)	ND	L

[a]Mutagenicity test
[b]Toxicity test
M: Moderate, L: Low,
ND: Nondetectable

NO_x, SO_2, SO_3, CO, and TUHC emissions over the one day test period averaged 510, 450, 2.6, 285, and 1 ppm (corrected to 3 percent O_2) respectively. The SO_x (SO_2 and SO_3) emissions measured are consistent with expectations from a source burning about 1 percent sulfur fuel. The test site's reported fuel ultimate analysis indicated that the CWS sulfur content was 0.61 percent (dry basis), though additional analyses presented in Reference 3-2 suggest that is would have been about 1 percent.

N_2O emissions were measured at 70 ppm (corrected to 3 percent O_2). The ratio of this level to the NO_x (NO and NO_2) emission level was about 15 percent. Other recent tests suggest that this ratio is generally in the 20 to 25 percent range from external combustion sources.

Particulate emissions, at 4.3 g/dscm, were quite high, the direct result of the absence of a particulate control device on the test unit for the demonstration burn. Emitted particle size distribution was heavily weighted to coarse particulate; over half the particulate mass had size greater than 10 μm, over 90 percent was greater than 3 μm. Combustibles losses in the flue gas particulate were quite high; composite particulate had carbon content of about 40 percent.

The elements aluminum, calcium, iron, magnesium, potassium, silicon, sodium, and titanium were emitted from the boiler at the highest rates (emissions greater than 0.1 g/s). This is, again, the result of the absence of a particulate control device on the unit. Most of these elements were major components of the ash fraction of the CWS fuel. Mass balance closure within a factor of two to three existed for most of the elements determined.

Total organic emissions from the boiler were 15 to 17 mg/dscm, with 90 percent of these in the volatile C_2, C_3, and C_4 boiling point range.

Correspondingly, flue gas levels of total semivolatile and nonvolatile organics were relatively low, less than 1.6 mg/dscm.

Of the semivolatile organic priority pollutants, only naphthalene was emitted in the flue gas at detectable levels. Emissions, at less than 5 μg/dscm, were low, which is consistent with the relatively low flue gas total organic emissions.

Of the volatile organic priority pollutants, emissions of several C_1 and C_2 chlorinated aliphatic hydrocarbons, chlorobenzene, benzene, and ethylbenzene were detected in the flue gas at levels in the 1 to 20 μg/dscm range. The aromatic hydrocarbons (benzene and ethylbenzene) are commonly present at these levels in combustion source flue gas. The chlorinated compounds noted arise when chlorine-containing fuels are burned. The chlorine content of the CWS was reported in the 0.1 percent (dry basis) range.

Results of bioassay testing of SASS train samples showed that the sorbent module extract was of moderate mutagenicity and toxicity. Such positive responses for the sorbent module extract in the assays performed are common for SASS tests of combustion sources. Both particulate size fractions (>3 μm and <3 μm) were of nondetectable mutagenicity and low toxicity.

REFERENCES FOR SECTION 4

4-1. "Threshold Limit Values for Chemical Substances and Physical Agents in the Work Environment with Intended Changes for 1983-84," American Conference of Governmental Industrial Hygienists, Cincinnati, Ohio, 1983.

4-2. OSHA Safety and Health Standards, 29 CFR 1910, Subpart Z.

4-3. Brusick, D. J., and R. R. Young, "IERL-RTP Procedures Manual: Level 1 Environmental Assessment, Biological Tests," EPA-600/8-81-024, NTIS PB 81-228966, October 1981.

SECTION 5

TEST QUALITY ASSURANCE ACTIVITIES

Quality assurance (QA) activities implemented for this test included:

- Performing replicate standards and sample injections in the onsite determination of C_1 to C_6 hydrocarbons
- Performing a duplicate injections of the SASS sorbent module extract for TCO analyses

5.1 C_1 TO C_6 HYDROCARBON ANALYSIS PRECISION

Replicate gas chromotograph injections were perfomred for the C_1 to C_6 hydrocarbon analysis. The calibration standard used was a mixture of normal C_1 to C_6 hydrocarbons at about 15 ppm each.

Area counts and the corresponding percent relative standard deviation of replicate injections are summarized in Table 5-1. As noted in the table, of 19 measurements (a measurement being one boiling point range, e.g., C_1, for one sample), 13 had precision within the project QA objective of 15 percent (Ref. 5-1). This yields imply a percent completeness of 68 percent, which fails the project objective of 90 percent.

Of the six measurements failing the precision goal of 15 percent, two were for a C_1 measurement. These failures have no effect on project conclusions since no C_1 was reported detectable in the stack gas sampled (sample measurements were not significantly different from blank values).

TABLE 5-1. AREA COUNTS AND RELATIVE STANDARD DEVIATIONS FOR C_1 TO C_6 ANALYSES

	Injection 1	Injection 2	Injection 3	Injection 4	Injection 5	Relative standard deviation (%)
			Calibration standards			
C_1	37,696	39,376	35,199	24,262	24,923	22.3
C_2	10,250	10,600	12,602	11,251	10,927	8.1
C_3	11,741	11,982	14,730	14,232	13,713	10.1
C_4	15,356	15,354	19,045	17,735	17,228	9.4
C_5	19,637	20,154	24,736	22,270	21,973	9.3
C_6	24,715	22,598	26,915	23,932	23,733	6.6
			Sample at 10:55			
C_1	22,411	20,250	20,009	--	--	6.3
C_2	5,472	--	--	--	--	--
C_3	2,035	2,019	1,957	--	--	2.1
C_4	982	924	--	--	--	4.3
C_5	--	--	--	--	--	--
C_6	--	--	--	--	--	--
			Sample at 14:35			
C_1	16,122	16,219	16,669	--	--	1.8
C_2	3,561	3,880	3,738	--	--	4.3
C_3	1,610	2,751	7,296	--	--	77.4
C_4	--		--	--	--	--
C_5	--		--	--	--	--
C_6	--		--	--	--	--

(continued)

TABLE 5-1. (continued)

	Injection 1	Injection 2	Injection 3	Injection 4	Injection 5	Relative standard deviation (%)
			Sample at 15:55			
C_1	15,409	16,034	--	--	--	2.8
C_2	3,603	3,685	--	--	--	1.6
C_3	2,503	1,766	--	--	--	24.4
C_4	--	--	--	--	--	--
C_5	--	--	--	--	--	--
C_6	--	3,121	--	--	--	--
			Sample at 17:20			
C_1	8,125	7,738	8,043	--	--	2.6
C_2	773	1,511	941	--	--	36.0
C_3	9,171	3,544	1,463	--	--	84.4
C_4	1,445	--	--	--	--	--
C_5	--	--	--	--	--	--
C_6	--	--	--	--	--	--
			Bomb blank			
C_1	13,422	19,395	--	--	--	25.7
C_2	--	--	--	--	--	--
C_3	--	--	--	--	--	--
C_4	--	--	--	--	--	--
C_5	--	--	--	--	--	--
C_6	--	--	--	--	--	--

Three of the remaining four failures of the QA precision objectives were for the C_3 boiling range measurement. The final failure was for the C_2 boiling range measurement. Project conclusions were that the bulk of the organic emissions (over 50 percent) were of volatile organics (C_1 to C_6 hydrocarbons) and that over half of these were of C_3 boiling range commponents. The poor precision of this measurement suggests that the actual C_3 emission level may have been as much as a factor of 2 different from the reported value. Such a difference would not alter the conclusion that most of the organic emitted form the boiler was in the volatile boiling point range, although conclusions regarding the distribution of emissions within this range might change.

5.2 TOTAL CHROMOTOGRAPHABLE ORGANIC (TCO) ANALYSIS PRECISION

Replicate injections were made of the concentrated sorbent module extract from the SASS train. The first injection yielded an analysis result of 1.6 mg/train of TCO, while the second injection yielded 1.5 mg/train. This corresponds to a RSD of 4.6 percent, which is within the QA objective for this measurement of 10 percent (Ref. 5-1).

REFERENCES FOR SECTION 5

5-1. "Quality Assurance Plan for the Combustion Modification Environmental Assessment," prepared under EPA Contract No. 68-02-3188, September 10, 1982.

APPENDIX A

SAMPLING AND ANALYSIS METHODS

Emissions test equipment was provided by Acurex Corporation. Onsite equipment included a continuous monitoring system for emissions measurements of O_2, CO_2, CO, NO_x, and total unburned hydrocarbon (TUHC); a combined EPA Method 5/8 train for particulate, SO_2, and SO_3 emissions; the SASS train for particulate mass and size distribution, trace element, and semivolatile and nonvolatile organic emissions; a VOST train for volatile organic emissions; gas grab sampling equipment for determing C_1 to C_6 hydrocarbons by onsite gas chromatography/flame ionization detector (GC/FID); and gas grab sampling equipment for determining N_2O emissions by laboratory GC/electron capture detector (ECD). The following sections summarize the sampling and analysis equipment and methods used in the field and laboratory.

A.1 CONTINUOUS MONITORING SYSTEM

Rack-mounted monitors and recorders located in a mobile emission laboratory were used for continuous measurement of O_2, CO_2, NO_x, CO, and TUHC. Figure A-1 illustrates the continuous flue gas extractive sampling system and monitors arrangement. Flue gas was drawn through an in-stack filter and a heated stainless steel probe to a gas conditioning and refrigeration system designed to remove water. An unheated line was then used to bring the conditioned gas to the monitors. Calibration gases were used to monitor and correct the drift in the instruments. The calibration

1. In situ filter 0.6μ 99.999 percent efficient
2. Exhaust duct
3. 316 stainless steel probe
4. Four pass conditioner-dryer, 316 stainless steel internals
5. 3/8-inch unheated Teflon
6. Teflon-lined sample pump
7. 3/8-inch heated teflon
8. Rotameter
9. 1/4-inch Teflon tubing
10. Calibration gas manifold
11. Calibration gas selector valve
12. Calibration gas cylinders
13. Backpressure regulator

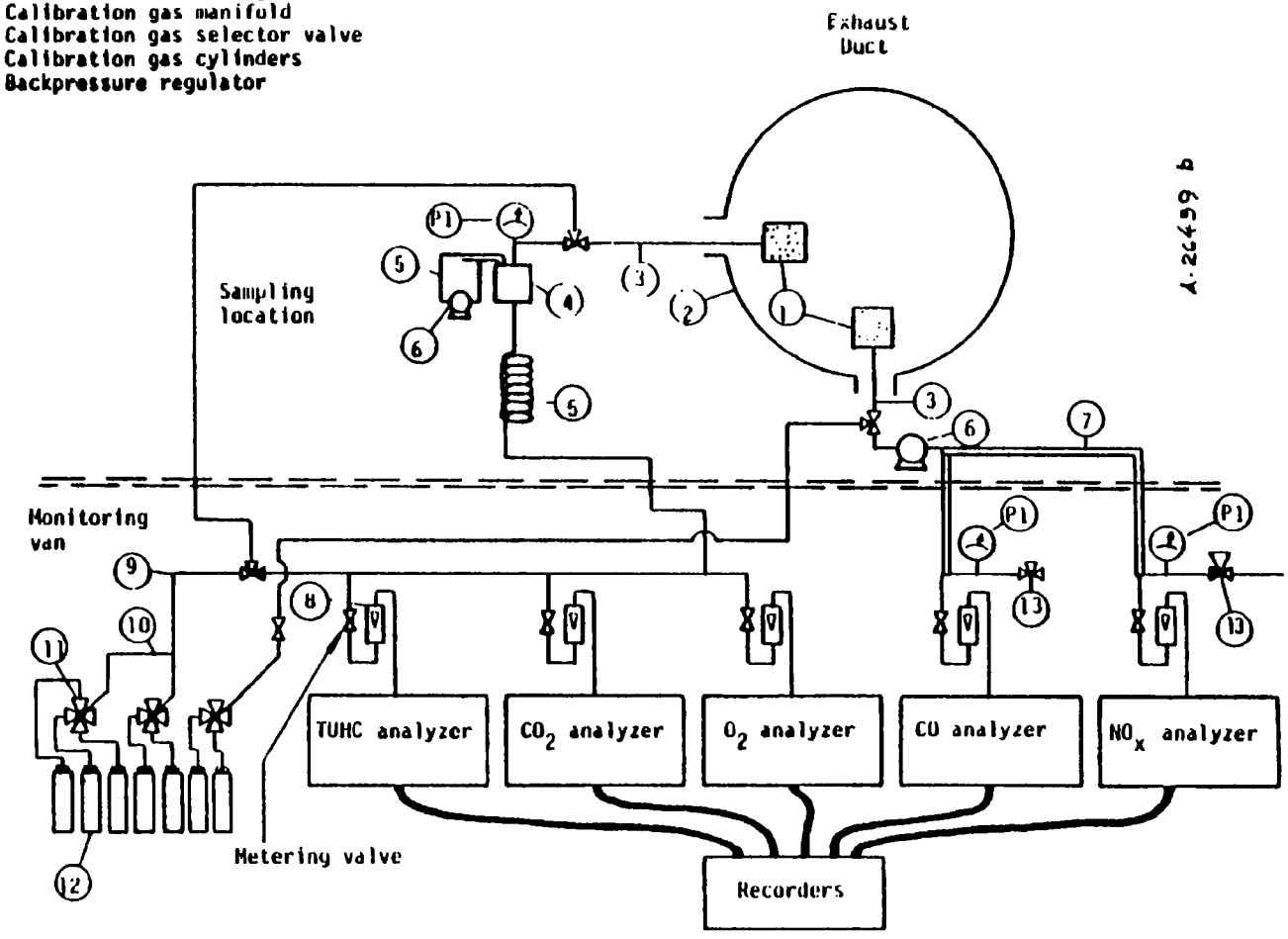

Figure A-1. Continuous monitoring system.

gases follow the same path as the flue gas being monitored in that both are conditioned at the stack prior to analysis. Table A-1 lists the instrumentation constituting the continuous monitoring and flue gas extractive sampling system used in this test program.

A.2 PARTICULATE AND SULFUR OXIDE EMISSIONS

Particulate mass emissions were measured in accordance with EPA Reference Method 5, and SO_2 and SO_3 emissions were measured in accordance with EPA Reference Method 8. A combined Method 5/8 train employing the Acurex High Volume Stack Sampler (HVSS), illustrated schematically in Figure A-2, was used in this program. A glass-lined stainless-steel probe was used to isokinetically extract the gas sample from the stack. Particulate was removed by a heated 142 mm (5.6 in.) diameter glass fiber filter. Both the filter and the sampling probes were maintained at 120°C (250°F) as specified by Method 5.

The impinger train consisted of four glass impingers with a fritted glass filter placed between the first and second impingers as specified by Method 8. The first impinger contained 100 ml of 80 percent isopropanol (20 percent water); the second and third impingers contained 100 ml of 3 percent H_2O_2 in water; and the fourth impinger contained 200g of silica gel.

Solid particulate emissions were determined by gravimetric analysis of the probe wash and the heated glass fiber filter.

SO_2 and SO_3 emissions were measured by titration of the impinger solutions per EPA Method 8. Sulfuric acid mist and any vapor phase SO_3 is trapped in the isopropanol impinger with the backup filter trapping any carryover mist. SO_2 is absorbed in the H_2O_2 impingers. After completion of

TABLE A-1. CONTINUOUS MONITORING EQUIPMENT IN THE MOBILE LABORATORY

Instrument	Principle of operation	Manufacturer	Instrument model	Range
NO NO_x	Chemiluminescence	Thermo Electron	10 AR	0-100 ppm 0-500 ppm 0-1,000 ppm 0-5,000 ppm
CO	Nondispersive infrared (NDIR)	ANARAD	500R	0-1,000 ppm
TUHC	Flame ionization detector	Beckman	400	0-10 ppm 0-100 ppm 0-1000 ppm
CO_2	Nondispersive infrared (NDIR)	ANARAD	AR500	0-20 percent
O_2	Fuel cell	Teledyne		0-5 percent 0-25 percent
Sample gas conditioner	Refrigerant dryer-condenser	Hankinson	E-4G-SS	10 scfm
Strip chart recorder	Dual pen analog	Linear	400	0-10 mV 0-100 mV 0-1V 0-10V

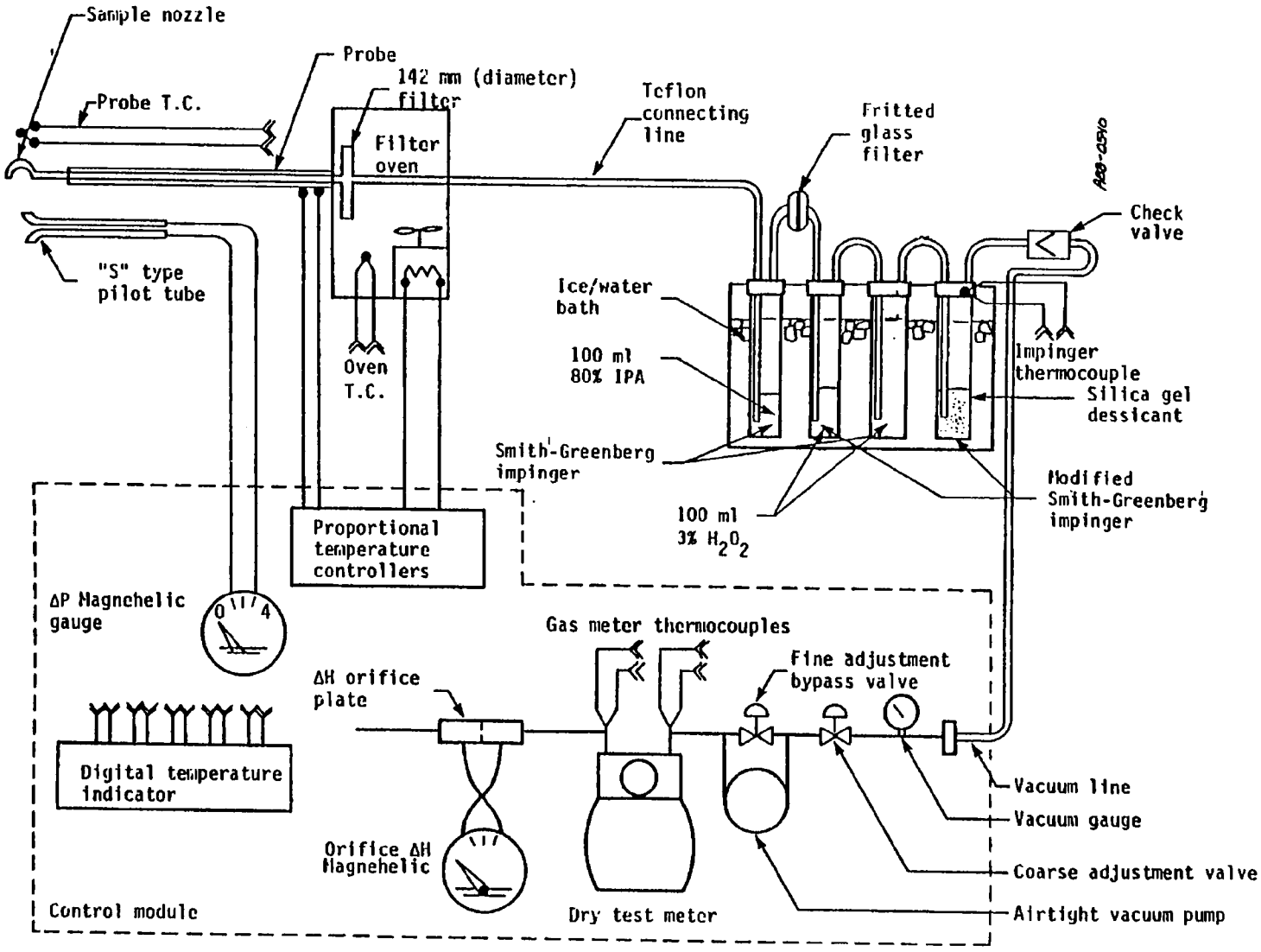

Figure A-2. Schematic of particulate and SO_x sampling train (EPA Method 5 and 8).

a test, the filter was rinsed with isopropanol and the rinse solution added to the isopropanol impinger solution. Absorbed SO_3 in the isopropanol and SO_2 in the H_2O_2 were determined separately by barium-thorin titration.

A.3 TRACE ELEMENT AND ORGANIC EMISSIONS

Emissions of inorganic trace elements and organic compounds were sampled with the source assessment sampling system (SASS). Designed for Level 1 environmental assessment (Reference A-1), the SASS collects large quantities of gas and solid samples required for subsequent analyses of inorganic and organic emissions as well as particle size measurement.

The SASS, illustrated in Figure A-3, is generally similar to the system utilized for total particulate mass emission tests (HVSS) with the exception of:

- Particulate cyclones heated in the oven with the filter to 230°C (450°F)
- The addition of a gas cooler and organic sampling module
- The addition of necessary vacuum pumps

Schematics outlining the sampling and analytical procedures using the SASS equipment are presented in Figures A-4 and A-5. The following paragraphs briefly describe analytical procedures used in measuring stack outlet trace elements and organic emissions.

Inorganic analyses of solid and liquid samples from the SASS train were performed with spark source mass spectroscopy (SSMS) for most of the trace elements. Atomic absorption spectrometry (AAS) was used for analyses of volatile mercury (Hg), antimony (Sb), and arsenic (As) and for backup analyses for those elements identified as major components by SSMS. Other major component backup methods used were specific ion electrode for fluorine,

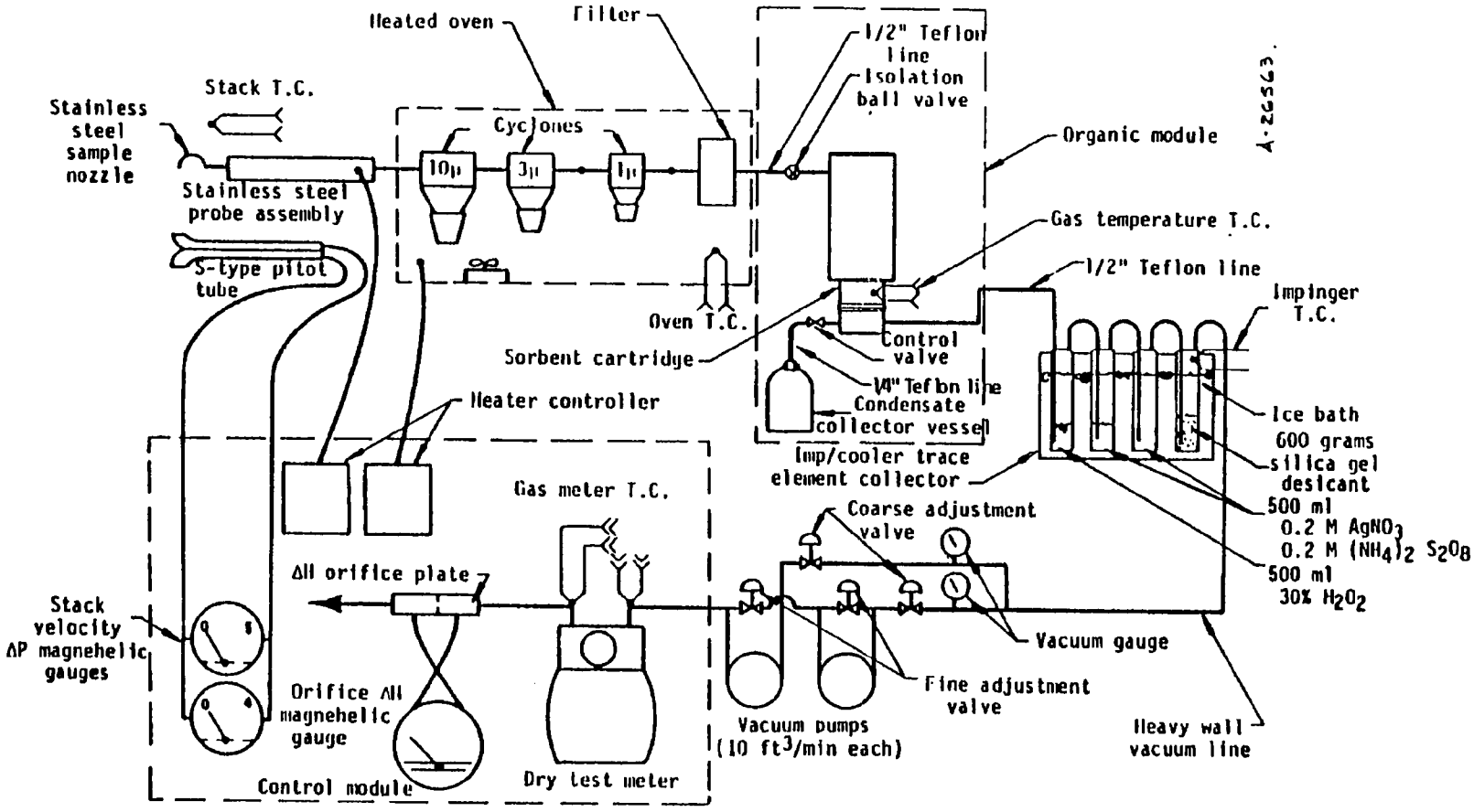

Figure A-3. SASS train schematic.

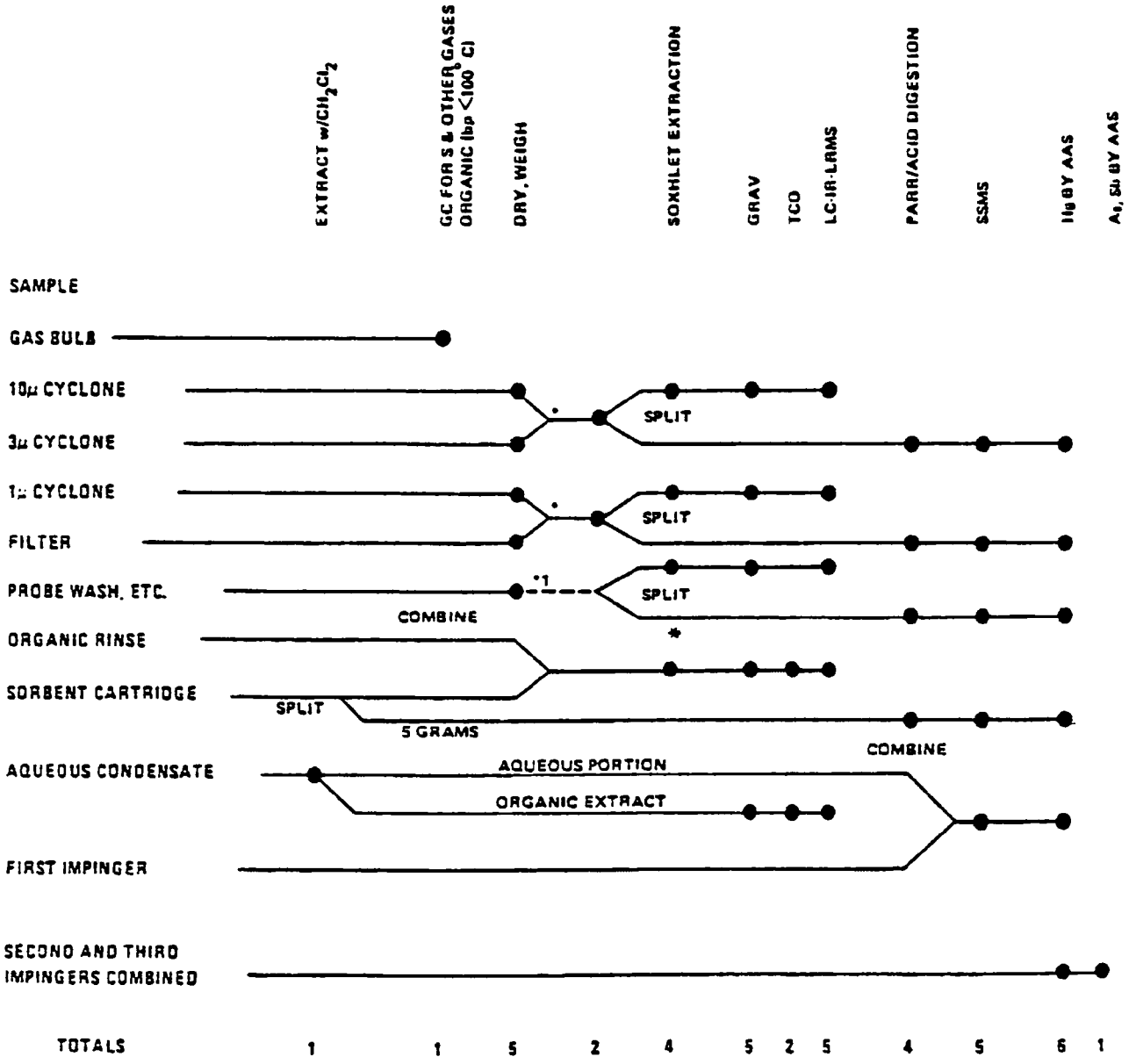

* If required, sample should be set aside for biological analysis at this point.

[1] This step is required to define the total mass of particulate catch. If the sample exceeds 10% of the total cyclone and filter sample weight proceed to analysis. If the sample is less than 10% of the catch, hold in reserve.

Figure A-4. Flue gas analysis protocol for SASS samples.

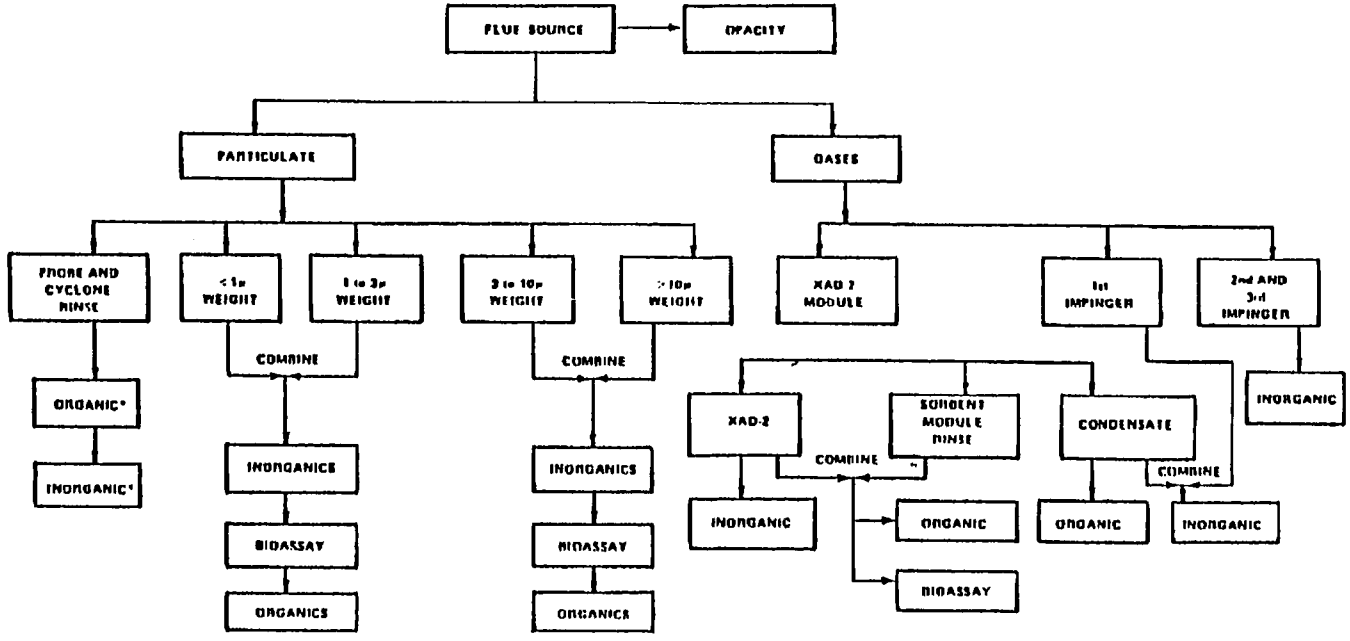

Figure A-5. Flue gas analysis protocol.

colorimetric for phosphorus, and either turbidimetric or x-ray fluorescence spectrometry for sulfur.

Quantitative information on total organic emissions was obtained by gas chromatography for total chromatographable organics (TCO) and by gravimetry (GRAV) of particulate, sorbent module (XAD-2), and condensate trap organic extracts. Infrared spectroscopy (IR) of extract sample GRAV residues was used for identification or organic functional groups. Gas chromatography/mass spectrometry (GC/MS) was used to quantitate the semivolatile organic priority pollutant species in extract samples. This class contains several of the polynuclear aromatic hydrocarbon (PAH) compounds of interest from combustion sources. Figure A-6 illustrates the organic analysis methodology followed.

Specifics of the Level 1 methodology followed (with extension) are detailed in Ref. A-1.

A.4 C_1 TO C_6 HYDROCARBON SAMPLING AND ANALYSIS

Samples of flue gas were collected for C_1 to C_6 hydrocarbon analysis using a grab sampling procedure. The samples were collected using the apparatus illustrated in Figure A-7. The equipment consisted of a heated, 0.64-cm (1/4-in.) OD pyrex-lined, stainless-steel probe fitted with a 0.7-μm sintered stainless steel filter at the probe inlet. The outlet of the probe was directly attached to a diaphragm vacuum pump which was in turn attached to a 500 ml heated stainless steel sampling cylinder. The sampling cylinder was insulated with heat tape powered by a varying voltage controller. The heated jacket kept the sample gas above the dew point to minimize sample loss due to water condensation.

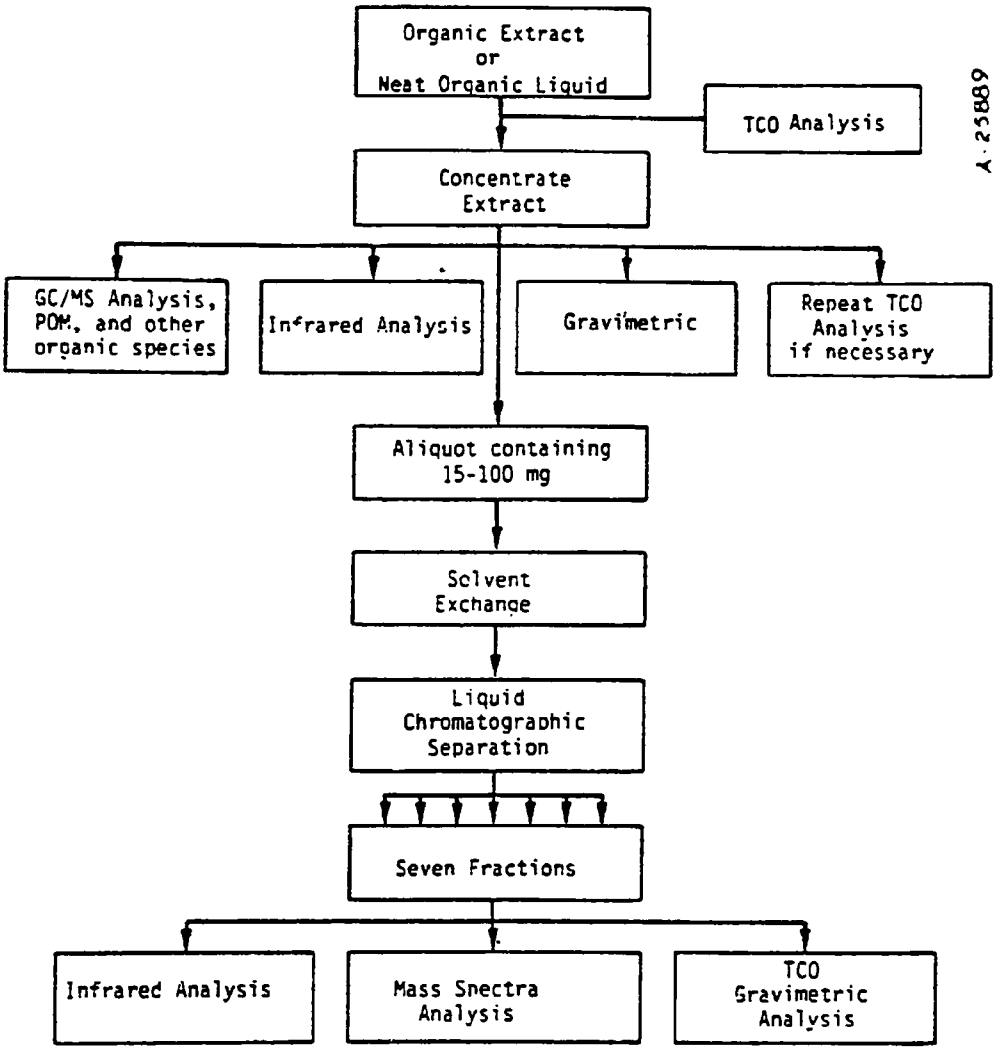

Figure A-6. Organic analysis methodology.

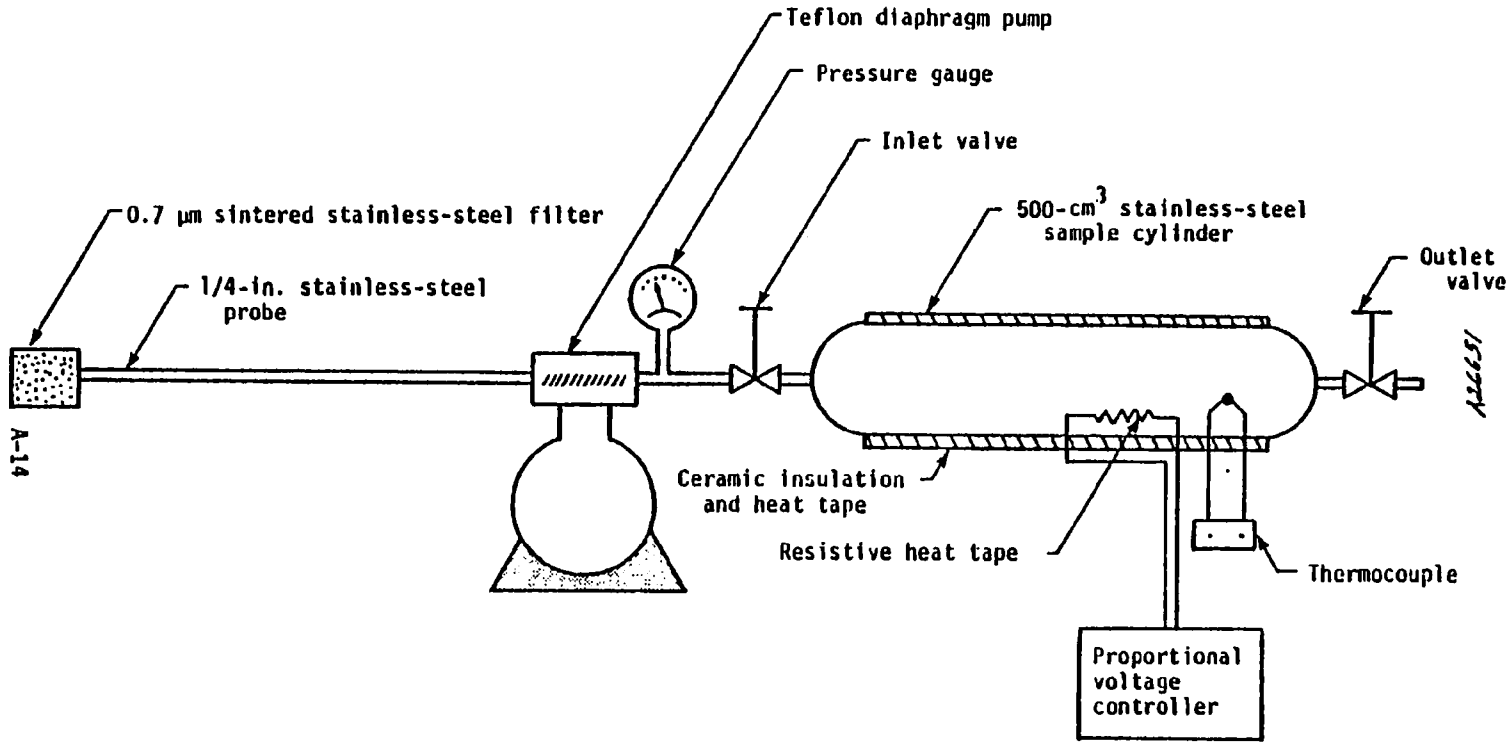

Figure A-7. N_2O sampling system.

Prior to sampling, the gas cylinder was purged with stack gas for 3 min and then sealed. The trapped flue gas was then analyzed onsite with a Varian Model 940 gas chromatograph (GC) equipped with a flame ionization detector. A 3.05m (10-ft) long, 0.32-cm (1/8-in.) diameter stainless-steel column packed with Porapak R was used to separate the hydrocarbons into their respective components (C_1 to C_6). The GC was calibrated with repeated injections of a standard gas containing C_1 to C_6 hydrocarbons (each having a concentration of about 15 ppm). The chromatographic responses for the standards and the samples were recorded on a Hewlett-Packard Model 3390A reporting integrator.

A.5 N_2O EMISSIONS

Stack gas grab samples were extracted into stainless steel cylinders, similar to those used for C_1 to C_6 hydrocarbon sampling, for laboratory analysis for N_2O.

For analysis, each sample cylinder was externally heated to 120°C (250°F), then a 1-ml sample was withdrawn with a gas-tight syringe for injection into a gas chromatograph. The analytical equipment consisted of a gas chromatograph equipped with a ^{63}Ni electron capture detector and a 5.5m (18-ft) stainless-steel column packed for 3.7m (12-ft) with Poropak R 80/100 mesh and 1.8m (6-ft) with Poropak Super Q. The injector temperature was kept at 120°C, the detector at 350°C, and the column temperature at 39°C. Elution time for N_2O was approximately 7.5 min.

A.6 VOLATILE ORGANIC EMISSIONS

A volatile organic sampling train (VOST), shown schematically in Figure A-8, was used to measure the low molecular weight volatile organic compounds (boiling points $\leq$110°C) in the flue gas according to the EPA

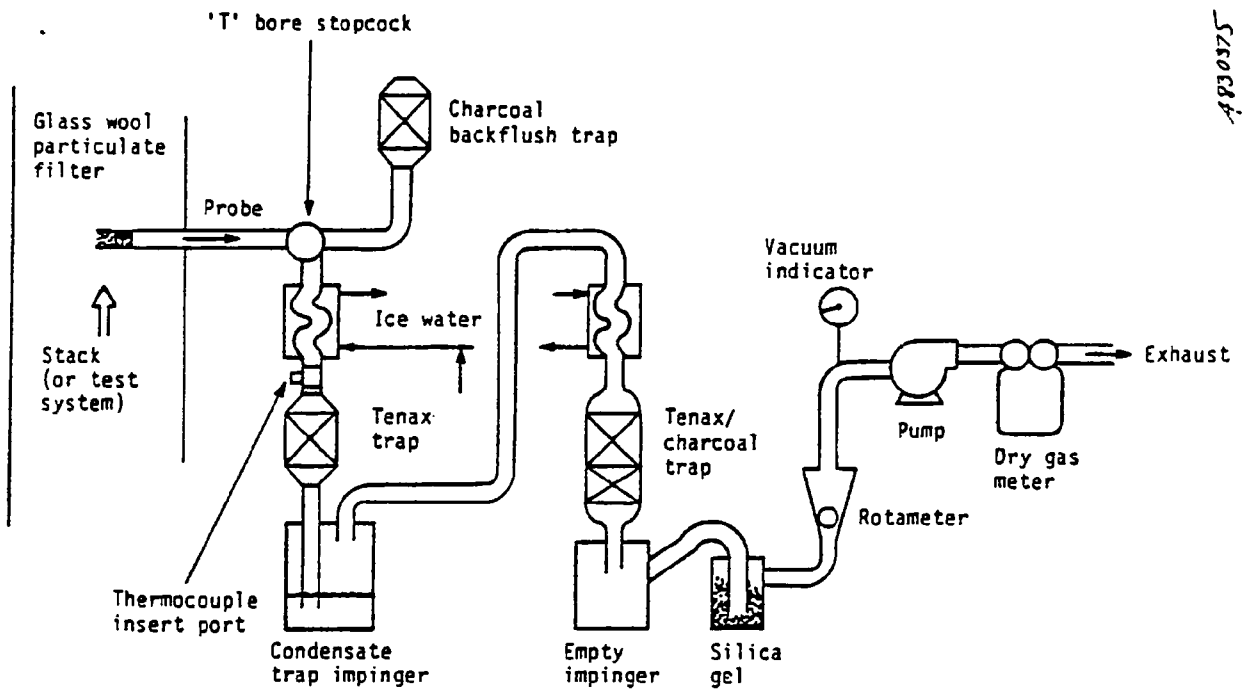

Figure A-8. Schematic of volatile organic sampling train (VOST).

protocol (Ref. A-2). The train consists of two organic sorbent traps connected in series. The first trap contained ~1.6g of the porous polymer Tenax-GC; 35/60 mesh. The second trap contained ~1.0g each of Tenax-GC and petroleum-based charcoal. Prior to their use in the field, each trap was conditioned to remove organic compounds. Conditioning consisted of baking each trap at 190°C with a N_2 purge for an 8-hour period. The traps were then desorbed at 190°C directly into a GC/FID. If a trap showed no contaminant peaks greater than 20 ng as benzene or toluene, it was sealed at each end with compression fittings, and considered ready for sampling.

Before the field testing, the entire system was leak-checked at ~15 to 20-in. of vacuum. A leakage rate of 0.05 liter/min was considered acceptable. Ambient air was drawn through a charcoal-filled tube to prevent organic contamination while bringing the system back to ambient pressure.

Three pairs of sample traps, a field blank pair, and a trip blank pair were obtained for the test program. For each sample pair, a total sample volume of 20 liters was taken over a 40-min period (0.5 l/min). Upon completion of the test, the sample traps were removed from the train, and sealed. All traps were analyzed by GC/MS according to the EPA VOST protocol (Ref. A-2). Each trap in a pair was thermally desorbed and analyzed for the EPA Method 624 (volatile) priority pollutants. Only two pairs of sample traps and the field blank pair were analyzed.

REFERENCES FOR APPENDIX A

A-1. Lentzen, D. E., et al., "IERL-RTP Procedures Manual: Level 1 Environmental Assessment (Second Edition)," EPA-600/7-78-201, NTIS PB293795, October 1978.

A-2. Hansen, E. M., "Protocol for the Collection and Analysis of Volatile POHC's Using VOST," EPA-600/8-84-007, NTIS PB84-170042 March 1984.

APPENDIX B

TRACE ELEMENT CONCENTRATIONS

The following tables present sample trace element analysis results and trace element discharge stream concentrations. The tables labeled "input data" give element analysis results (μg/g or μg/ml) for each sample analyzed. The composition of the fuel, and all SASS train samples (10 + 3 μm particulate, filter + 1 μm particulate, XAD-2 resin, first impinger, and second and third impingers) are noted.

The tables labeled "concentration" give the calculated flue gas concentrations (μg/dscm) of each element corresponding to each SASS train sample, and the SASS train sum (labeled "stack gas").

The tables labeled "mass/heat input" give element flowrates in ng/J heat input. The tables labeled "mass flow" give corresponding flowrates in μg/s. Element flowrates in the fuel input and each component of the flue gas SASS train sample are noted.

The final table, labeled "boiler mass balance," summarizes the total input and output for each element and notes the ratio of the two as a measure of mass balance closure.

Symbols appearing in the tables include:

DSCM	Dry standard cubic meter at 1 atm and 20°C
MCG	Microgram
PPM	Part per million by weight

<	Less than
>	Greater than
N	Element not analyzed

Trace elements having concentrations less than the detectable limit or having a blank value greater than the sample value were given an arbitrary concentration of zero. Values in the form A < x < B were determined by letting elements reported as less than some concentration be represented by a concentration of zero for the low value and the reported (less than) concentration as the high value.

Detectability limits for the various SASS, liquid, and solid stream samples were the following:

- 10 + 3 μm particulate -- 0.1 μg/g
- Filter + 1 μm paticulate -- 0.2 μg/g
- XAD-2 -- 0.05 μg/g
- Impinger solutions -- 0.001 μg/ml
- Fuel -- 0.2 μg/g

The data inputs to the computer code for calculation of trace element flowrates were the following:

- CWS flowrate 512.5 g/s, dry basis
- Heating value of CWS = 34.374 MJ/kg, dry basis
- Natural gas fuel flowrate = 3.16 scm/min
- Heating value of natural gas = 36.9 MJ/scm
- Gas volume sampled by SASS = 29.245 dscm
- Calculated flue gas flowrate = 11.40 dscm/s
- SASS 10 + 3 μm cyclone catch = 82.5768g
- SASS 1 μm cyclone + filter catch = 7.5784g

- XAD-2 weight = 130g
- SASS impinger 1 final volume = 1,635 ml
- SASS impingers 2 + 3 final volume 1,870 ml

At standard conditions (20°C (68°F) and 1 atm), one gram molecular weight of an ideal gas occupies 24.04 liters.

INPUT DATA

CWS FIRED
INDUSTRIAL BOILER

ELEMENT	COAL-WATER SLURRY PPM
ALUMINUM	.700E+04
ANTIMONY	.200E+01
ARSENIC	.100E+01
BARIUM	.230E+02
BERYLLIUM	.900E+01
BISMUTH	.000E+00
BORON	.800E+01
BROMINE	.800E+01
CADMIUM	.000E+00
CALCIUM	.270E+03
CERIUM	.400E+01
CESIUM	.000E+00
CHLORINE	.610E+03
CHROMIUM	.310E+02
COBALT	.300E+01
COPPER	.800E+01
DYSPROSIUM	.000E+00
ERBIUM	.000E+00
EUROPIUM	.300E+00
FLUORINE	.340E+02
GADOLINIUM	.000E+00
GALLIUM	.300E+01
GERMANIUM	.600E+00
GOLD	.000E+00
HAFNIUM	.000E+00
HOLMIUM	.000E+00
IODINE	.500E+01
IRON	.170E+04
LANTHANUM	.600E+01
LEAD	.300E+01
LITHIUM	.500E+02
LUTETIUM	.000E+00
MAGNESIUM	.200E+03
MANGANESE	.600E+01
MERCURY	.200E-01
MOLYBDENUM	.200E+01
NEODYMIUM	.200E+01
NICKEL	.300E+01
NIOBIUM	.100E+01
PHOSPHORUS	.460E+03
POTASSIUM	.800E+02
PRASEODYMIUM	.900E+00
RUBIDIUM	.200E+01
SAMARIUM	.200E+01
SCANDIUM	.300E+01

CWS FIRED
INDUSTRIAL BOILER

INPUT DATA

ELEMENT	PPM COAL-WATER SLURRY
SELENIUM	.800E+01
SILICON	.128E+05
SILVER	.000E+00
SODIUM	.700E+02
STRONTIUM	.170E+02
SULFUR	.897E+04
TANTALUM	.000E+00
TELLURIUM	<.700E+00
TERBIUM	.000E+00
THALLIUM	.000E+00
THORIUM	.400E+01
THULIUM	.000E+00
TIN	.500E+00
TITANIUM	.400E+03
TUNGSTEN	.000E+00
URANIUM	.200E+01
VANADIUM	.800E+01
YTTERBIUM	.000E+00
YTTRIUM	.400E+01
ZINC	.600E+01
ZIRCONIUM	.600E+01

INPUT DATA

CWS FIRED
INDUSTRIAL BOILER
PPM

ELEMENT	3 MICRON + 10 MICRON FILTER	+ 1 MICRON	XAD	FIRST IMPINGER	2ND & 3RD IMPINGERS
ALUMINUM	.919E+05	.429E+05	.000E+00	.240E-01	N.000E+00
ANTIMONY	.500E+01	.420E+02	.100E+00	.300E-02	.000E+00
ARSENIC	.140E+02	.590E+02	.150E+00	.200E-02	.000E+00
BARIUM	.330E+03	.130E+04	.600E+00	.260E-01	N.000E+00
BERYLLIUM	.870E+02	.710E+03	.000E+00	.000E+00	N.000E+00
BISMUTH	.000E+00	.160E+02	.000E+00	.000E+00	N.000E+00
BORON	.200E+02	.890E+02	.000E+00	.100E-02	N.000E+00
BROMINE	.300E+02	.820E+02	.300E+00	.250E-01	N.000E+00
CADMIUM	<.100E+01	.300E+01	.500E-01	.100E-02	N.000E+00
CALCIUM	.410E+04	.520E+04	.000E+00	.320E+00	N.000E+00
CERIUM	.260E+02	.120E+03	.000E+00	<.100E-02	N.000E+00
CESIUM	.200E+01	.700E+01	.000E+00	<.100E-02	N.000E+00
CHLORINE	.590E+03	.400E+03	.000E+00	.700E+00	N.000E+00
CHROMIUM	.180E+03	.490E+03	.000E+00	.290E+02	N.000E+00
COBALT	.300E+02	.130E+03	.000E+00	.300E-01	N.000E+00
COPPER	.840E+02	.140E+03	.000E+00	.999E+00	N.000E+00
DYSPROSIUM	.700E+01	.160E+02	.000E+00	.000E+00	N.000E+00
ERBIUM	.300E+01	.800E+01	.000E+00	.000E+00	N.000E+00
EUROPIUM	.100E+01	.400E+01	.000E+00	.000E+00	N.000E+00
FLUORINE	<.100E+03	.300E+03	.350E+02	.186E+02	N.000E+00
GADOLINIUM	.400E+01	.130E+02	.000E+00	.000E+00	N.000E+00
GALLIUM	.410E+02	.180E+03	.100E+00	.400E-02	N.000E+00
GERMANIUM	.500E+01	.380E+02	<.500E-01	<.100E-02	N.000E+00
GOLD	.000E+00	.000E+00	<.500E-01	.000E+00	N.000E+00
HAFNIUM	.800E+00	.500E+01	.000E+00	.000E+00	N.000E+00
HOLMIUM	.400E+01	.100E+02	.000E+00	<.900E-02	N.000E+00
IODINE	.700E+01	.400E+01	.150E+00	.900E-02	N.000E+00
IRON	.225E+05	.307E+05	.000E+00	.150E+03	N.000E+00
LANTHANUM	.320E+02	.180E+03	.000E+00	.000E+00	N.000E+00
LEAD	.280E+02	.310E+03	.200E+00	.100E+00	N.000E+00
LITHIUM	.870E+02	.440E+02	.000E+00	.150E-01	N.000E+00
LUTETIUM	.200E+00	.100E+01	.000E+00	.000E+00	N.000E+00
MAGNESIUM	.250E+04	.230E+04	.000E+00	.300E+00	N.000E+00
MANGANESE	.200E+02	.430E+02	.000E+00	.400E+00	N.000E+00
MERCURY	.800E-01	.500E-01	.300E-01	.000E+00	.000E+00
MOLYBDENUM	.120E+02	.120E+02	.160E+01	.000E+00	N.000E+00
NEODYMIUM	.120E+02	.320E+02	.000E+00	<.100E-02	N.000E+00
NICKEL	.320E+03	.770E+03	.000E+00	.993E+00	N.000E+00
NIOBIUM	.180E+02	.270E+02	<.500E-01	.400E-02	N.000E+00
PHOSPHORUS	.600E+03	.600E+03	.000E+00	.600E-01	N.000E+00
POTASSIUM	.900E+04	.990E+04	.000E+00	.160E+00	N.000E+00
PRASEODYMIUM	.800E+01	.250E+02	.000E+00	.000E+00	N.000E+00
RUBIDIUM	.180E+02	.460E+02	.250E+00	<.100E-02	N.000E+00
SAMARIUM	.700E+01	.220E+02	.000E+00	.000E+00	N.000E+00
SCANDIUM	.200E+02	.820E+02	.000E+00	<.100E-02	N.000E+00

INPUT DATA

CWS FIRED
INDUSTRIAL BOILER
PPM

ELEMENT	3 MICRON + 10 MICRON FILTER	+ 1 MICRON	XAD	FIRST IMPINGER	2ND & 3RD IMPINGERS
SELENIUM	.800E+01	.170E+02	.200E+00	.550E-01	N.000E+00
SILICON	.132E+06	.513E+05	.000E+00	.100E+01	N.000E+00
SILVER	.100E+01	.400E+01	.000E+00	.400E-02	N.000E+00
SODIUM	.880E+04	.540E+04	.000E+00	.380E+03	N.000E+00
STRONTIUM	.250E+03	.680E+03	.150E+00	.200E-02	N.000E+00
SULFUR	.640E+03	.300E+04	.000E+00	.470E+04	N.000E+00
TANTALUM	.200E+01	.100E+01	.000E+00	<.100E-02	N.000E+00
TELLURIUM	.000E+00	.100E+01	.000E+00	<.200E-02	N.000E+00
TERBIUM	.900E+00	.400E+01	.000E+00	.000E+00	N.000E+00
THALLIUM	.400E+00	.100E+02	.000E+00	.000E+00	N.000E+00
THORIUM	.130E+02	.910E+02	<.400E+00	.000E+00	N.000E+00
THULIUM	.500E+00	.100E+01	.000E+00	.000E+00	N.000E+00
TIN	.200E+01	.150E+02	.500E+00	.000E+00	N.000E+00
TITANIUM	.540E+04	.570E+04	.100E+01	<.800E-02	N.000E+00
TUNGSTEN	.900E+00	.900E+01	.000E+00	.400E-02	N.000E+00
URANIUM	.700E+01	.750E+02	.000E+00	.000E+00	N.000E+00
VANADIUM	.120E+03	.400E+03	.000E+00	.100E-01	N.000E+00
YTTERBIUM	.100E+01	.110E+02	.000E+00	.000E+00	N.000E+00
YTTRIUM	.410E+02	.930E+02	.000E+00	<.100E-02	N.000E+00
ZINC	.100E+03	.400E+03	.000E+00	.690E+00	N.000E+00
ZIRCONIUM	.450E+02	.140E+03	.250E+00	.000E+00	N.000E+00

CONCENTRATION — CWS FIRED INDUSTRIAL BOILER — MCG/DSCM

ELEMENT	3 MICRON + 10 MICRON FILTER	1 MICRON	XAD	FIRST IMPINGER	2ND & 3RD IMPINGERS
ALUMINUM	.259E+06	.111E+05	.000E+00	.134E+01	N .000E+00
ANTIMONY	.141E+02	.109E+02	.445E+00	.168E+00	.000E+00
ARSENIC	.395E+02	.153E+02	.667E+00	.112E+00	.000E+00
BARIUM	.932E+03	.337E+03	.267E+01	.145E+01	N .000E+00
BERYLLIUM	.246E+03	.184E+03	.000E+00	.000E+00	N .000E+00
BISMUTH	.000E+00	.415E+01	.000E+00	.000E+00	N .000E+00
BORON	.565E+02	.231E+02	.000E+00	.559E-01	N .000E+00
BROMINE	.847E+02	.212E+02	.133E+01	.140E+01	N .000E+00
CADMIUM	< .282E+01	.777E+00	.222E+00	.559E-01	N .000E+00
CALCIUM	.116E+05	.135E+04	.000E+00	.179E+02	N .000E+00
CERIUM	.734E+02	.311E+02	.000E+00	< .559E-01	N .000E+00
CESIUM	.565E+01	.181E+01	.000E+00	< .559E-01	N .000E+00
CHLORINE	.167E+04	.104E+03	.000E+00	.391E+02	N .000E+00
CHROMIUM	.508E+03	.127E+03	.000E+00	.162E+04	N .000E+00
COBALT	.847E+02	.337E+02	.000E+00	.168E+01	N .000E+00
COPPER	.237E+03	.363E+02	.000E+00	.559E+02	N .000E+00
DYSPROSIUM	.198E+02	.415E+01	.000E+00	.000E+00	N .000E+00
ERBIUM	.847E+01	.207E+01	.000E+00	.000E+00	N .000E+00
EUROPIUM	.282E+01	.104E+01	.000E+00	.000E+00	N .000E+00
FLUORINE	< .282E+03	.777E+02	.156E+03	.104E+04	N .000E+00
GADOLINIUM	.113E+02	.337E+01	.000E+00	.000E+00	N .000E+00
GALLIUM	.116E+03	.466E+02	.445E+00	.224E+00	N .000E+00
GERMANIUM	.141E+02	.985E+01	< .222E+00	< .559E-01	N .000E+00
GOLD	.000E+00	.000E+00	< .222E+00	.000E+00	N .000E+00
HAFNIUM	.226E+01	.130E+01	.000E+00	.000E+00	N .000E+00
HOLMIUM	.113E+02	.259E+01	.000E+00	< .503E+00	N .000E+00
IODINE	.198E+02	.104E+01	.667E+00	.503E+00	N .000E+00
IRON	.635E+05	.796E+04	.000E+00	.838E+04	N .000E+00
LANTHANUM	.904E+02	.466E+02	.000E+00	.000E+00	N .000E+00
LEAD	.791E+02	.803E+02	.889E+00	.559E+01	N .000E+00
LITHIUM	.246E+03	.114E+02	.000E+00	.839E+00	N .000E+00
LUTETIUM	.565E+00	.259E+00	.000E+00	.000E+00	N .000E+00
MAGNESIUM	.706E+04	.596E+03	.000E+00	.168E+02	N .000E+00
MANGANESE	.565E+02	.111E+02	.000E+00	.224E+02	N .000E+00
MERCURY	.226E+00	.130E-01	.133E+00	.000E+00	.000E+00
MOLYBDENUM	.339E+02	.311E+01	.711E+01	.000E+00	N .000E+00
NEODYMIUM	.339E+02	.829E+01	.000E+00	< .559E-01	N .000E+00
NICKEL	.904E+03	.200E+03	.000E+00	.555E+02	N .000E+00
NIOBIUM	.508E+02	.700E+01	< .222E+00	.224E+00	N .000E+00
PHOSPHORUS	.169E+04	.155E+03	.000E+00	.335E+01	N .000E+00
POTASSIUM	.254E+05	.257E+04	.000E+00	.895E+01	N .000E+00
PRASEODYMIUM	.226E+02	.648E+01	.000E+00	.000E+00	N .000E+00
RUBIDIUM	.508E+02	.119E+02	.111E+01	< .559E-01	N .000E+00
SAMARIUM	.198E+02	.570E+01	.000E+00	.000E+00	N .000E+00
SCANDIUM	.565E+02	.212E+02	.000E+00	< .559E-01	N .000E+00

CWS FIRED
INDUSTRIAL BOILER

CONCENTRATION MCG/DSCM

ELEMENT	3 MICRON + 10 MICRON FILTER	1 MICRON	XAD	FIRST IMPINGER	2ND & 3RD IMPINGERS
SELENIUM	.226E+02	.441E+01	.889E+00	.307E+01	N .000E+00
SILICON	.372E+06	.133E+05	.000E+00	.559E+02	N .000E+00
SILVER	.282E+01	.104E+01	.000E+00	.224E+00	N .000E+00
SODIUM	.248E+05	.140E+04	.000E+00	.212E+05	N .000E+00
STRONTIUM	.706E+03	.176E+03	.667E+00	.112E+00	N .000E+00
SULFUR	.181E+04	.777E+03	.000E+00	.263E+06	N .000E+00
TANTALUM	.565E+01	.259E+00	.000E+00	< .559E-01	N .000E+00
TELLURIUM	.000E+00	.259E+00	.000E+00	< .112E+00	N .000E+00
TERBIUM	.254E+01	.104E+01	.000E+00	.000E+00	N .000E+00
THALLIUM	.113E+01	.259E+01	.000E+00	.000E+00	N .000E+00
THORIUM	.367E+02	.236E+02	< .178E+01	.000E+00	N .000E+00
THULIUM	.141E+01	.259E+00	.000E+00	.000E+00	N .000E+00
TIN	.565E+01	.389E+01	.222E+01	.000E+00	N .000E+00
TITANIUM	.152E+05	.148E+04	.445E+01	< .447E+00	N .000E+00
TUNGSTEN	.254E+01	.233E+01	.000E+00	.224E+00	N .000E+00
URANIUM	.198E+02	.194E+02	.000E+00	.000E+00	N .000E+00
VANADIUM	.339E+03	.104E+03	.000E+00	.559E+00	N .000E+00
YTTERBIUM	.282E+01	.285E+01	.000E+00	.000E+00	N .000E+00
YTTRIUM	.116E+03	.241E+02	.000E+00	< .559E-01	N .000E+00
ZINC	.282E+03	.104E+03	.000E+00	.386E+02	N .000E+00
ZIRCONIUM	.127E+03	.363E+02	.111E+01	.000E+00	N .000E+00

CONCENTRATION	CWS FIRED INDUSTRIAL BOILER MCG/DSCM
ELEMENT	STACK GAS
ALUMINUM	.271E+06
ANTIMONY	.256E+02
ARSENIC	.556E+02
BARIUM	.127E+04
BERYLLIUM	.430E+03
BISMUTH	.415E+01
BORON	.796E+02
BROMINE	.109E+03
CADMIUM	.106E+01<X<.388E+01
CALCIUM	.129E+05
CERIUM	.105E+03
CESIUM	.752E+01
CHLORINE	.181E+04
CHROMIUM	.226E+04
COBALT	.120E+03
COPPER	.329E+03
DYSPROSIUM	.239E+02
ERBIUM	.105E+02
EUROPIUM	.386E+01
FLUORINE	.127E+04<X<.155E+04
GADOLINIUM	.147E+02
GALLIUM	.163E+03
GERMANIUM	.240E+02<X<.242E+02
GOLD	< .222E+00
HAFNIUM	.355E+01
HOLMIUM	.139E+02<X<.144E+02
IODINE	.220E+02
IRON	.799E+05
LANTHANUM	.137E+03
LEAD	.166E+03
LITHIUM	.258E+03
LUTETIUM	.824E+00
MAGNESIUM	.767E+04
MANGANESE	.900E+02
MERCURY	.372E+00
MOLYBDENUM	.441E+02
NEODYMIUM	.422E+02
NICKEL	.116E+04
NIOBIUM	.583E+02
PHOSPHORUS	.185E+04
POTASSIUM	.280E+05
PRASEODYMIUM	.291E+02
RUBIDIUM	.639E+02
SAMARIUM	.255E+02
SCANDIUM	.778E+02

CONCENTRATION	CWS FIRED INDUSTRIAL BOILER MCG/DSCM
ELEMENT	STACK GAS
SELENIUM	.310E+02
SILICON	.385E+06
SILVER	.408E+01
SODIUM	.475E+05
STRONTIUM	.883E+03
SULFUR	.265E+06
TANTALUM	.596E+01
TELLURIUM	.259E+00<X<.371E+00
TERBIUM	.358E+01
THALLIUM	.372E+01
THORIUM	.603E+02<X<.621E+02
THULIUM	.167E+01
TIN	.118E+02
TITANIUM	.167E+05
TUNGSTEN	.510E+01
URANIUM	.392E+02
VANADIUM	.443E+03
YTTERBIUM	.567E+01
YTTRIUM	.140E+03
ZINC	.425E+03
ZIRCONIUM	.164E+03

CWS FIRED
INDUSTRIAL BOILER

MASS/HEAT INPUT NG/J

ELEMENT	3 MICRON + 10 MICRON FILTER	1 MICRON	XAD	FIRST IMPINGER	2ND & 3RD IMPINGERS
ALUMINUM	.151E+03	.648E+01	.000E+00	.782E-03	N .000E+00
ANTIMONY	.823E-02	.634E-02	.259E-03	.978E-04	.000E+00
ARSENIC	.230E-01	.891E-02	.389E-03	.652E-04	.000E+00
BARIUM	.543E+00	.196E+00	.155E-02	.847E-03	N .000E+00
BERYLLIUM	.143E+00	.107E+00	.000E+00	.000E+00	N .000E+00
BISMUTH	.000E+00	.242E-02	.000E+00	.000E+00	N .000E+00
BORON	.329E-01	.134E-01	.000E+00	.326E-04	N .000E+00
BROMINE	.494E-01	.124E-01	.777E-03	.815E-03	N .000E+00
CADMIUM	< .165E-02	.453E-03	.130E-03	.326E-04	N .000E+00
CALCIUM	.675E+01	.785E+00	.000E+00	.104E-01	N .000E+00
CERIUM	.428E-01	.181E-01	.000E+00	< .326E-04	N .000E+00
CESIUM	.329E-02	.106E-02	.000E+00	< .326E-04	N .000E+00
CHLORINE	.971E+00	.604E-01	.000E+00	.228E-01	N .000E+00
CHROMIUM	.296E+00	.740E-01	.000E+00	.945E+00	N .000E+00
COBALT	.494E-01	.196E-01	.000E+00	.978E-03	N .000E+00
COPPER	.138E+00	.211E-01	.000E+00	.326E-01	N .000E+00
DYSPROSIUM	.115E-01	.242E-02	.000E+00	.000E+00	N .000E+00
ERBIUM	.494E-02	.121E-02	.000E+00	.000E+00	N .000E+00
EUROPIUM	.165E-02	.604E-03	.000E+00	.000E+00	N .000E+00
FLUORINE	< .165E+00	.453E-01	.907E-01	.605E+00	N .000E+00
GADOLINIUM	.658E-02	.196E-02	.000E+00	.000E+00	N .000E+00
GALLIUM	.675E-01	.272E-01	.259E-03	.130E-03	N .000E+00
GERMANIUM	.823E-02	.574E-02	< .130E-03	< .326E-04	N .000E+00
GOLD	.000E+00	.000E+00	< .130E-03	.000E+00	N .000E+00
HAFNIUM	.132E-02	.755E-03	.000E+00	.000E+00	N .000E+00
HOLMIUM	.658E-02	.151E-02	.000E+00	< .293E-03	N .000E+00
IODINE	.115E-01	.604E-03	.389E-03	.293E-03	N .000E+00
IRON	.370E+02	.464E+01	.000E+00	.489E+01	N .000E+00
LANTHANUM	.527E-01	.272E-01	.000E+00	.000E+00	N .000E+00
LEAD	.461E-01	.468E-01	.518E-03	.326E-02	N .000E+00
LITHIUM	.143E+00	.665E-02	.000E+00	.489E-03	N .000E+00
LUTETIUM	.329E-03	.151E-03	.000E+00	.000E+00	N .000E+00
MAGNESIUM	.411E+01	.347E+00	.000E+00	.978E-02	N .000E+00
MANGANESE	.329E-01	.650E-02	.000E+00	.130E-01	N .000E+00
MERCURY	.132E-03	.755E-05	.777E-04	.000E+00	.000E+00
MOLYBDENUM	.198E-01	.181E-02	.415E-02	.000E+00	N .000E+00
NEODYMIUM	.198E-01	.483E-02	.000E+00	< .326E-04	N .000E+00
NICKEL	.527E+00	.116E+00	.000E+00	.324E-01	N .000E+00
NIOBIUM	.296E-01	.408E-02	< .130E-03	.130E-03	N .000E+00
PHOSPHORUS	.988E+00	.906E-01	.000E+00	.196E-02	N .000E+00
POTASSIUM	.148E+02	.150E+01	.000E+00	.521E-02	N .000E+00
PRASEODYMIUM	.132E-01	.378E-02	.000E+00	.000E+00	N .000E+00
RUBIDIUM	.296E-01	.695E-02	.648E-03	< .326E-04	N .000E+00
SAMARIUM	.115E-01	.332E-02	.000E+00	.000E+00	N .000E+00
SCANDIUM	.329E-01	.124E-01	.000E+00	< .326E-04	N .000E+00

MASS/HEAT INPUT

CWS FIRED
INDUSTRIAL BOILER
NG/J

ELEMENT	3 MICRON + 10 MICRON FILTER	1 MICRON	XAD	FIRST IMPINGER	2ND & 3RD IMPINGERS
SELENIUM	.132E-01	.257E-02	.518E-03	.179E-02	N .000E+00
SILICON	.217E+03	.775E+01	.000E+00	.326E-01	N .000E+00
SILVER	.165E-02	.604E-03	.000E+00	.130E-03	N .000E+00
SODIUM	.145E+02	.816E+00	.000E+00	.124E+02	N .000E+00
STRONTIUM	.411E+00	.103E+00	.389E-03	.652E-04	N .000E+00
SULFUR	.105E+01	.453E+00	.000E+00	.153E+03	N .000E+00
TANTALUM	.329E-02	.151E-03	.000E+00	< .326E-04	N .000E+00
TELLURIUM	.000E+00	.151E-03	.000E+00	< .652E-04	N .000E+00
TERBIUM	.148E-02	.604E-03	.000E+00	.000E+00	N .000E+00
THALLIUM	.658E-03	.151E-02	.000E+00	.000E+00	N .000E+00
THORIUM	.214E-01	.137E-01	< .104E-02	.000E+00	N .000E+00
THULIUM	.823E-03	.151E-03	.000E+00	.000E+00	N .000E+00
TIN	.329E-02	.227E-02	.130E-02	.000E+00	N .000E+00
TITANIUM	.889E+01	.861E+00	.259E-02	< .261E-03	N .000E+00
TUNGSTEN	.148E-02	.136E-02	.000E+00	.130E-03	N .000E+00
URANIUM	.115E-01	.113E-01	.000E+00	.000E+00	N .000E+00
VANADIUM	.198E+00	.604E-01	.000E+00	.326E-03	N .000E+00
YTTERBIUM	.165E-02	.166E-02	.000E+00	.000E+00	N .000E+00
YTTRIUM	.675E-01	.140E-01	.000E+00	< .326E-04	N .000E+00
ZINC	.165E+00	.604E-01	.000E+00	.225E-01	N .000E+00
ZIRCONIUM	.741E-01	.211E-01	.648E-03	.000E+00	N .000E+00

MASS/HEAT INPUT — CWS FIRED INDUSTRIAL BOILER

NG/J

ELEMENT	COAL-WATER SLURRY	STACK GAS
ALUMINUM	.204E+03	.158E+03
ANTIMONY	.582E-01	.149E-01
ARSENIC	.291E-01	.324E-01
BARIUM	.669E+00	.742E+00
BERYLLIUM	.262E+00	.250E+00
BISMUTH	.000E+00	.242E-02
BORON	.233E+00	.464E-01
BROMINE	.233E+00	.634E-01
CADMIUM	.000E+00	.615E-03<X<.226E-02
CALCIUM	.785E+01	.754E+01
CERIUM	.116E+00	.610E-01
CESIUM	.000E+00	.438E-02
CHLORINE	.177E+02	.105E+01
CHROMIUM	.902E+00	.132E+01
COBALT	.873E-01	.700E-01
COPPER	.233E+00	.192E+00
DYSPROSIUM	.000E+00	.139E-01
ERBIUM	.000E+00	.615E-02
EUROPIUM	.873E-02	.225E-02
FLUORINE	.989E+00	.741E+00<X<.906E+00
GADOLINIUM	.000E+00	.855E-02
GALLIUM	.873E-01	.951E-01
GERMANIUM	.175E-01	.140E-01<X<.141E-01
GOLD	.000E+00	< .130E-03
HAFNIUM	.000E+00	.207E-02
HOLMIUM	.000E+00	.809E-02<X<.839E-02
IODINE	.145E+00	.128E-01
IRON	.495E+02	.466E+02
LANTHANUM	.175E+00	.799E-01
LEAD	.873E-01	.967E-01
LITHIUM	.145E+01	.150E+00
LUTETIUM	.000E+00	.480E-03
MAGNESIUM	.582E+01	.447E+01
MANGANESE	.175E+00	.524E-01
MERCURY	.582E-03	.217E-03
MOLYBDENUM	.582E-01	.257E-01
NEODYMIUM	.582E-01	.246E-01
NICKEL	.873E-01	.675E+00
NIOBIUM	.291E-01	.340E-01
PHOSPHORUS	.134E+02	.108E+01
POTASSIUM	.233E+01	.163E+02
PRASEODYMIUM	.262E-01	.169E-01
RUBIDIUM	.582E-01	.373E-01
SAMARIUM	.582E-01	.148E-01
SCANDIUM	.873E-01	.453E-01

MASS/HEAT INPUT	CWS FIRED INDUSTRIAL BOILER NG/J	
ELEMENT	COAL-WATER SLURRY	STACK GAS
SELENIUM	.233E+00	.180E-01
SILICON	.372E+03	.225E+03
SILVER	.000E+00	.238E-02
SODIUM	.204E+01	.277E+02
STRONTIUM	.495E+00	.515E+00
SULFUR	.261E+03	.155E+03
TANTALUM	.000E+00	.348E-02
TELLURIUM	< .204E-01	.151E-03<X<.216E-03
TERBIUM	.000E+00	.209E-02
THALLIUM	.000E+00	.217E-02
THORIUM	.116E+00	.351E-01<X<.362E-01
THULIUM	.000E+00	.974E-03
TIN	.145E-01	.685E-02
TITANIUM	.116E+02	.975E+01
TUNGSTEN	.000E+00	.297E-02
URANIUM	.582E-01	.229E-01
VANADIUM	.233E+00	.258E+00
YTTERBIUM	.000E+00	.331E-02
YTTRIUM	.116E+00	.816E-01
ZINC	.175E+00	.247E+00
ZIRCONIUM	.175E+00	.959E-01

CWS FIRED
INDUSTRIAL BOILER

MASS FLOW MCG/SEC

ELEMENT	3 MICRON + 10 MICRON	FILTER + 1 MICRON	XAD	FIRST IMPINGER	2ND & 3RD IMPINGERS
ALUMINUM	.296E+07	.127E+06	.000E+00	.153E+02	N .000E+00
ANTIMONY	.161E+03	.124E+03	.507E+01	.191E+01	.000E+00
ARSENIC	.451E+03	.174E+03	.760E+01	.127E+01	.000E+00
BARIUM	.106E+05	.384E+04	.304E+02	.166E+02	N .000E+00
BERYLLIUM	.280E+04	.210E+04	.000E+00	.000E+00	N .000E+00
BISMUTH	.000E+00	.473E+02	.000E+00	.000E+00	N .000E+00
BORON	.644E+03	.263E+03	.000E+00	.637E+00	N .000E+00
BROMINE	.966E+03	.242E+03	.152E+02	.159E+02	N .000E+00
CADMIUM	< .322E+02	.886E+01	.253E+01	.637E+00	N .000E+00
CALCIUM	.132E+06	.154E+05	.000E+00	.204E+03	N .000E+00
CERIUM	.837E+03	.355E+03	.000E+00	< .637E+00	N .000E+00
CESIUM	.644E+02	.207E+02	.000E+00	< .637E+00	N .000E+00
CHLORINE	.190E+05	.118E+04	.000E+00	.446E+03	N .000E+00
CHROMIUM	.579E+04	.145E+04	.000E+00	.185E+05	N .000E+00
COBALT	.966E+03	.384E+03	.000E+00	.191E+02	N .000E+00
COPPER	.270E+04	.414E+03	.000E+00	.637E+03	N .000E+00
DYSPROSIUM	.225E+03	.473E+02	.000E+00	.000E+00	N .000E+00
ERBIUM	.966E+02	.236E+02	.000E+00	.000E+00	N .000E+00
EUROPIUM	.322E+02	.118E+02	.000E+00	.000E+00	N .000E+00
FLUORINE	< .322E+04	.886E+03	.177E+04	.118E+05	N .000E+00
GADOLINIUM	.129E+03	.384E+02	.000E+00	.000E+00	N .000E+00
GALLIUM	.132E+04	.532E+03	.507E+01	.255E+01	N .000E+00
GERMANIUM	.161E+03	.112E+03	< .253E+01	< .637E+00	N .000E+00
GOLD	.000E+00	.000E+00	< .253E+01	.000E+00	N .000E+00
HAFNIUM	.258E+02	.148E+02	.000E+00	.000E+00	N .000E+00
HOLMIUM	.129E+03	.295E+02	.000E+00	< .574E+01	N .000E+00
IODINE	.225E+03	.118E+02	.760E+01	.574E+01	N .000E+00
IRON	.724E+06	.907E+05	.000E+00	.956E+05	N .000E+00
LANTHANUM	.103E+04	.532E+03	.000E+00	.000E+00	N .000E+00
LEAD	.901E+03	.916E+03	.101E+02	.637E+02	N .000E+00
LITHIUM	.280E+04	.130E+03	.000E+00	.956E+01	N .000E+00
LUTETIUM	.644E+01	.295E+01	.000E+00	.000E+00	N .000E+00
MAGNESIUM	.805E+05	.680E+04	.000E+00	.191E+03	N .000E+00
MANGANESE	.644E+03	.127E+03	.000E+00	.255E+03	N .000E+00
MERCURY	.258E+01	.148E+00	.152E+01	.000E+00	.000E+00
MOLYBDENUM	.386E+03	.355E+02	.811E+02	.000E+00	N .000E+00
NEODYMIUM	.386E+03	.945E+02	.000E+00	< .637E+00	N .000E+00
NICKEL	.103E+05	.227E+04	.000E+00	.633E+03	N .000E+00
NIOBIUM	.579E+03	.798E+02	< .253E+01	.255E+01	N .000E+00
PHOSPHORUS	.193E+05	.177E+04	.000E+00	.382E+02	N .000E+00
POTASSIUM	.290E+06	.292E+05	.000E+00	.102E+03	N .000E+00
PRASEODYMIUM	.258E+03	.739E+02	.000E+00	.000E+00	N .000E+00
RUBIDIUM	.579E+03	.136E+03	.127E+02	< .637E+00	N .000E+00
SAMARIUM	.225E+03	.650E+02	.000E+00	.000E+00	N .000E+00
SCANDIUM	.644E+03	.242E+03	.000E+00	< .637E+00	N .000E+00

CWS FIRED
INDUSTRIAL BOILER

MASS FLOW MCG/SEC

ELEMENT	3 MICRON + 10 MICRON	FILTER + 1 MICRON	XAD	FIRST IMPINGER	2ND & 3RD IMPINGERS
SELENIUM	.258E+03	.502E+02	.101E+02	.351E+02	N .000E+00
SILICON	.424E+07	.152E+06	.000E+00	.637E+03	N .000E+00
SILVER	.322E+02	.118E+02	.000E+00	.255E+01	N .000E+00
SODIUM	.283E+06	.160E+05	.000E+00	.242E+06	N .000E+00
STRONTIUM	.805E+04	.201E+04	.760E+01	.127E+01	N .000E+00
SULFUR	.206E+05	.886E+04	.000E+00	.300E+07	N .000E+00
TANTALUM	.644E+02	.295E+01	.000E+00	< .637E+00	N .000E+00
TELLURIUM	.000E+00	.295E+01	.000E+00	< .127E+01	N .000E+00
TERBIUM	.290E+02	.118E+02	.000E+00	.000E+00	N .000E+00
THALLIUM	.129E+02	.295E+02	.000E+00	.000E+00	N .000E+00
THORIUM	.419E+03	.269E+03	< .203E+02	.000E+00	N .000E+00
THULIUM	.161E+02	.295E+01	.000E+00	.000E+00	N .000E+00
TIN	.644E+02	.443E+02	.253E+02	.000E+00	N .000E+00
TITANIUM	.174E+06	.168E+05	.507E+02	< .510E+01	N .000E+00
TUNGSTEN	.290E+02	.266E+02	.000E+00	.255E+01	N .000E+00
URANIUM	.225E+03	.222E+03	.000E+00	.000E+00	N .000E+00
VANADIUM	.386E+04	.118E+04	.000E+00	.637E+01	N .000E+00
YTTERBIUM	.322E+02	.325E+02	.000E+00	.000E+00	N .000E+00
YTTRIUM	.132E+04	.275E+03	.000E+00	< .637E+00	N .000E+00
ZINC	.322E+04	.118E+04	.000E+00	.440E+03	N .000E+00
ZIRCONIUM	.145E+04	.414E+03	.127E+02	.000E+00	N .000E+00

CWS FIRED
INDUSTRIAL BOILER

MASS FLOW MCG/SEC

ELEMENT	COAL-WATER SLURRY	STACK GAS
ALUMINUM	.359E+07	.309E+07
ANTIMONY	.102E+04	.292E+03
ARSENIC	.512E+03	.634E+03
BARIUM	.118E+05	.145E+05
BERYLLIUM	.461E+04	.490E+04
BISMUTH	.000E+00	.473E+02
BORON	.410E+04	.907E+03
BROMINE	.410E+04	.124E+04
CADMIUM	.000E+00	.120E+02<X<.442E+02
CALCIUM	.138E+06	.148E+06
CERIUM	.205E+04	.119E+04
CESIUM	.000E+00	.857E+02
CHLORINE	.313E+06	.206E+05
CHROMIUM	.159E+05	.257E+05
COBALT	.154E+04	.137E+04
COPPER	.410E+04	.375E+04
DYSPROSIUM	.000E+00	.273E+03
ERBIUM	.000E+00	.120E+03
EUROPIUM	.154E+03	.440E+02
FLUORINE	.174E+05	.145E+05<X<.177E+05
GADOLINIUM	.000E+00	.167E+03
GALLIUM	.154E+04	.186E+04
GERMANIUM	.307E+03	.273E+03<X<.276E+03
GOLD	.000E+00	< .253E+01
HAFNIUM	.000E+00	.405E+02
HOLMIUM	.000E+00	.158E+03<X<.164E+03
IODINE	.256E+04	.251E+03
IRON	.871E+06	.911E+06
LANTHANUM	.307E+04	.156E+04
LEAD	.154E+04	.189E+04
LITHIUM	.256E+05	.294E+04
LUTETIUM	.000E+00	.939E+01
MAGNESIUM	.102E+06	.875E+05
MANGANESE	.307E+04	.103E+04
MERCURY	.102E+02	.424E+01
MOLYBDENUM	.102E+04	.503E+03
NEODYMIUM	.102E+04	.481E+03
NICKEL	.154E+04	.132E+05
NIOBIUM	.512E+03	.664E+03
PHOSPHORUS	.236E+06	.211E+05
POTASSIUM	.410E+05	.319E+06
PRASEODYMIUM	.461E+03	.331E+03
RUBIDIUM	.102E+04	.729E+03
SAMARIUM	.102E+04	.290E+03
SCANDIUM	.154E+04	.887E+03

CWS FIRED
INDUSTRIAL BOILER

MASS FLOW MCG/SEC

ELEMENT	COAL-WATER SLURRY	STACK GAS
SELENIUM	.410E+04	.353E+03
SILICON	.656E+07	.439E+07
SILVER	.000E+00	.466E+02
SODIUM	.359E+05	.541E+06
STRONTIUM	.871E+04	.101E+05
SULFUR	.460E+07	.303E+07
TANTALUM	.000E+00	.680E+02
TELLURIUM	< .359E+03	.295E+01<X<.423E+01
TERBIUM	.000E+00	408E+02
THALLIUM	.000E+00	.424E+02
THORIUM	.205E+04	.687E+03<X<.708E+03
THULIUM	.000E+00	.191E+02
TIN	.256E+03	.134E+03
TITANIUM	.205E+06	.191E+06
TUNGSTEN	.000E+00	.581E+02
URANIUM	.102E+04	.447E+03
VANADIUM	.410E+04	.505E+04
YTTERBIUM	.000E+00	.647E+02
YTTRIUM	.205E+04	.160E+04
ZINC	.307E+04	.484E+04
ZIRCONIUM	.307E+04	.187E+04

CWS FIRED
INDUSTRIAL BOILER

BOILER MASS BALANCE

INPUT = FUEL(CWS + NATURAL GAS) OUTPUT = STACK GAS

ELEMENT	TOTAL IN	TOTAL OUT	MASS BALANCE (OUT/IN)
ALUMINUM	.359E+07	.309E+07	.860E+00
ANTIMONY	.102E+04	.292E+03	.285E+00
ARSENIC	.512E+03	.634E+03	.124E+01
BARIUM	.118E+05	.145E+05	.123E+01
BERYLLIUM	.461E+04	.490E+04	.106E+01
BISMUTH		.473E+02	*
BORON	.410E+04	.907E+03	.221E+00
BROMINE	.410E+04	.124E+04	.302E+00
CADMIUM		.120E+02<X<.442E+02	*
CALCIUM	.138E+06	.148E+06	.107E+01
CERIUM	.205E+04	.119E+04	.582E+00
CESIUM		.857E+02	*
CHLORINE	.313E+06	.206E+05	.660E-01
CHROMIUM	.159E+05	.257E+05	.162E+01
COBALT	.154E+04	.137E+04	.890E+00
COPPER	.410E+04	.375E+04	.916E+00
DYSPROSIUM		.273E+03	*
ERBIUM		.120E+03	*
EUROPIUM	.154E+03	.440E+02	.286E+00
FLUORINE	.174E+05	.145E+05<X<.177E+05	.832E+00<X<.102E+01
GADOLINIUM		.167E+03	*
GALLIUM	.154E+04	.186E+04	.121E+01
GERMANIUM	.307E+03	.273E+03<X<.276E+03	.889E+00<X<.899E+00
GOLD		X<.253E+01	*
HAFNIUM		.405E+02	*
HOLMIUM		.158E+03<X<.164E+03	*
IODINE	.256E+04	.251E+03	.978E-01
IRON	.871E+06	.911E+06	.105E+01
LANTHANUM	.307E+04	.156E+04	.508E+00
LEAD	.154E+04	.189E+04	.123E+01
LITHIUM	.256E+05	.294E+04	.115E+00
LUTETIUM		.939E+01	*
MAGNESIUM	.102E+06	.875E+05	.853E+00
MANGANESE	.307E+04	.103E+04	.334E+00
MERCURY	.102E+02	.424E+01	.414E+00
MOLYBDENUM	.102E+04	.503E+03	.491E+00
NEODYMIUM	.102E+04	.481E+03	.470E+00
NICKEL	.154E+04	.132E+05	.859E+01
NIOBIUM	.512E+03	.664E+03	.130E+01
PHOSPHORUS	.236E+06	.211E+05	.896E-01
POTASSIUM	.410E+05	.319E+06	.778E+01
PRASEODYMIUM	.461E+03	.331E+03	.718E+00
RUBIDIUM	.102E+04	.729E+03	.711E+00
SAMARIUM	.102E+04	.290E+03	.283E+00
SCANDIUM	.154E+04	.887E+03	.577E+00

CWS FIRED
INDUSTRIAL BOILER

BOILER MASS BALANCE

INPUT = FUEL(CWS + NATURAL GAS) OUTPUT = STACK GAS

ELEMENT	TOTAL IN	TOTAL OUT	MASS BALANCE (OUT/IN)
SELENIUM	410E+04	.353E+03	.861E-01
SILICON	.656E+07	.439E+07	.670E+00
SILVER		.466E+02	*
SODIUM	.359E+05	.541E+06	.151E+02
STRONTIUM	.871E+04	.101E+05	.116E+01
SULFUR	.460E+07	.303E+07	.658E+00
TANTALUM		.680E+02	*
TELLURIUM	X<.359E+03	.295E+01<X<.423E+01	.824E-02 <X
TERBIUM		.408E+02	*
THALLIUM		.424E+02	*
THORIUM	.205E+04	.687E+03<X<.708E+03	.335E+00<X<.345E+00
THULIUM		.191E+02	*
TIN	.256E+03	.134E+03	.523E+00
TITANIUM	.205E+06	.191E+06	.930E+00
TUNGSTEN		.581E+02	*
URANIUM	.102E+04	.447E+03	.436E+00
VANADIUM	.410E+04	.505E+04	.123E+01
YTTERBIUM		.647E+02	*
YTTRIUM	.205E+04	.160E+04	.778E+00
ZINC	.307E+04	.484E+04	.157E+01
ZIRCONIUM	.307E+04	.187E+04	.610E+00

TECHNICAL REPORT DATA
(Please read Instructions on the reverse before completing)

1. REPORT NO. EPA-600/7-86-012a	2.	3. RECIPIENT'S ACCESSION NO.
4. TITLE AND SUBTITLE Environmental Assessment of a Coal/Water Slurry Fired Industrial Boiler; Volume I. Technical Results		5. REPORT DATE April 1986
		6. PERFORMING ORGANIZATION CODE
7. AUTHOR(S) D. Van Buren and L.R. Waterland		8. PERFORMING ORGANIZATION REPORT NO.
9. PERFORMING ORGANIZATION NAME AND ADDRESS Acurex Corporation, Energy and Environmental Division, P.O. Box 7555, Mountain View, California 94039		10. PROGRAM ELEMENT NO.
		11. CONTRACT/GRANT NO. 68-02-3188
12. SPONSORING AGENCY NAME AND ADDRESS EPA, Office of Research and Development, Air and Energy Engineering Research Laboratory, Research Triangle Park, NC 27711		13. TYPE OF REPORT AND PERIOD COVERED Final; 7/83 - 4/85
		14. SPONSORING AGENCY CODE EPA/600/13

15. SUPPLEMENTARY NOTES AEERL project officer is Joseph A. McSorley, Mail Drop 65, 919/541-2920. Volume II is a data supplement.

16. ABSTRACT The report gives results of comprehensive emission measurements and analyses for a 7.6 kg/s (60,000 lb/hr) watertube industrial boiler firing a coal/water slurry. Measurements included continuous monitoring of flue gas; quantitation of semivolatile organics and 73 trace elements; volatile organic sampling train (VOST) quantitation of volatile organic priority pollutants; EPA Method 5/8 for particulate and SOx; controlled condensation for SOx; Andersen impactors for particle size distribution; and grab samples for N2O. Emissions of NOx, SO2, CO, and hydrocarbons averaged 510, 450, 285, and 1 ppm, corrected to 3% oxygen. Particulate emissions were 4.3 g/dscm, and particle size was biased to larger size fractions with over half of particulate mass at 10 micrometers or greater. Over 90% were 3 micrometers or greater. Combustible losses were high with over 40% carbon content in particulate. Total organic emissions were 15 to 17 mg/dscm with half in the C1 to C6 range. Naphthalene was the only semivolatile detected.

17. KEY WORDS AND DOCUMENT ANALYSIS

a. DESCRIPTORS		b. IDENTIFIERS/OPEN ENDED TERMS	c. COSATI Field/Group	
Pollution	Water Tube Boilers	Polluation Control	13B	13A
Assessments		Stationary Sources	14B	
Slurries		Environmental Assessment	11G	
Coal			21D	
Water			07B	
Combustion			21B	

18. DISTRIBUTION STATEMENT Release to Public	19. SECURITY CLASS (This Report) Unclassified	21. NO. OF PAGES 85
	20. SECURITY CLASS (This page) Unclassified	22. PRICE

EPA Form 2220-1 (9-73)