PB81-203804

Evaluation of Procedures for Identification of Hazardous Wastes. Part 1. Sampling Extraction, and Inorganic Analytical Procedures

(U.S.) Environmental Monitoring and Support Lab.
Las Vegas, NV

Apr 81

U.S. DEPARTMENT OF COMMERCE
National Technical Information Service
NTIS®

PB81-203804

EPA-600/4-81-027
April 1981

EVALUATION OF THE PROCEDURES FOR IDENTIFICATION OF HAZARDOUS WASTES
Part 1 - Sampling, Extraction, and Inorganic Analytical Procedures

by

L. R. Williams, E. P. Meier, T. A. Hinners,
E. A. Yfantis, and W. F. Beckert
Quality Assurance Division
Environmental Monitoring Systems Laboratory-Las Vegas

and

T. E. Gran
Northrop Services, Inc.
Las Vegas, Nevada

ENVIRONMENTAL MONITORING SYSTEMS LABORATORY
OFFICE OF RESEARCH AND DEVELOPMENT
U.S. ENVIRONMENTAL PROTECTION AGENCY
LAS VEGAS, NEVADA 89114

NOTICE

THIS DOCUMENT HAS BEEN REPRODUCED FROM THE BEST COPY FURNISHED US BY THE SPONSORING AGENCY. ALTHOUGH IT IS RECOGNIZED THAT CERTAIN PORTIONS ARE ILLEGIBLE, IT IS BEING RELEASED IN THE INTEREST OF MAKING AVAILABLE AS MUCH INFORMATION AS POSSIBLE.

TECHNICAL REPORT DATA
(Please read Instructions on the reverse before completing)

1. REPORT NO. EPA-600/4-81-027	2.	3. RECIPIENT'S ACCESSION NO.
4. TITLE AND SUBTITLE EVALUATION OF THE PROCEDURES FOR IDENTIFICATION OF HAZARDOUS WASTES: Part I - Sampling, Extraction, and Inorganic Analytical Procedures		5. REPORT DATE April 1981
		6. PERFORMING ORGANIZATION CODE
7. AUTHOR(S) L. R. Williams, E. P. Meier, T. A. Hinners, E. A. Yfantis, W. F. Beckert, and T. E. Gran		8. PERFORMING ORGANIZATION REPORT NO.
9. PERFORMING ORGANIZATION NAME AND ADDRESS Environmental Monitoring Systems Laboratory U.S. Environmental Protection Agency P.O. Box 15027 Las Vegas, Nevada 89114		10. PROGRAM ELEMENT NO. A8FD1D/C8FD1D; A74D2B/874D2B
		11. CONTRACT/GRANT NO.
12. SPONSORING AGENCY NAME AND ADDRESS U.S. Environmental Protection Agency--Las Vegas, NV Office of Research and Development Environmental Monitoring Systems Laboratory Las Vegas, Nevada 89114		13. TYPE OF REPORT AND PERIOD COVERED 5/79 - 7/80
		14. SPONSORING AGENCY CODE EPA/600/07
15. SUPPLEMENTARY NOTES		

16. ABSTRACT

A study was performed to evaluate the sampling, extraction, and analytical procedures (inorganic) proposed in the RCRA regulations for identifying wastes as hazardous by the toxicity characteristic. Twenty-seven different wastes were sampled and analyzed in accordance with the RCRA regulations. The high degree of heterogeneity found in many wastes underscores the need for a carefully designed sampling protocol to reproducibly obtain representative samples from each waste source. A protocol was developed and tested for obtaining composite samples from waste ponds or lagoons. Samplers tested, the pond sampler and the COLIWASA (composite liquid waste sampler), were found to acceptable for sampling hazardous waste, when used in a well-designed sampling protocol. Reliability and reproducibility of the EP were evaluated (RSD <15%). The blade-type rotary extractor (as cited in the proposed regulations), a tumbling-type extractor, and a wrist-arm-type shaker were compared. These three types yielded similar EP extracts. The supporting analytical methods (atomic absorption spectrometry) were found to be highly reproducible for Cr and Pb, and somewhat less for the Ba (RSDs <3.1%; 4.6%; and 16.4%, respectively). Independent analyses of the same waste extracts by two laboratories were highly reproducible, i.e., the variance from analyses was negligible. However, differences in the EP extracts produced by the two laboratories show the need for a detailed and concise protocol for conducting the EP. Problems with sample contamination from the blade-type extractor (chromium) and the filtration apparatus (barium) were identified.

17. KEY WORDS AND DOCUMENT ANALYSIS

a. DESCRIPTORS	b. IDENTIFIERS/OPEN ENDED TERMS	c. COSATI Field/Group

18. DISTRIBUTION STATEMENT RELEASE TO PUBLIC	19. SECURITY CLASS (This Report) UNCLASSIFIED	21. NO. OF PAGES
	20. SECURITY CLASS (This page) UNCLASSIFIED	22. PRICE

EPA Form 2220-1 (Rev. 4-77) PREVIOUS EDITION IS OBSOLETE

DISCLAIMER

This report has been reviewed by the Environmental Monitoring Systems Laboratory, U.S. Environmental Protection Agency, and approved for publication. Mention of trade names or commercial products does not constitute endorsement or recommendation for use.

CONTENTS

	Page
Figures	iv
Tables	v
Acknowledgements	viii
Introduction	1
Background	1
Conclusions and Recommendations	3
Methods	5
Selection of Wastes	5
Collection of Samples	6
Shipment and Storage of Samples	10
Sampling Procedure Evaluation	10
Extraction Procedure (EP) Evaluation	15
Analytical Procedures Evaluation	23
Results and Discussion	25
Sampling Procedures Evaluation	25
Extraction Procedure Evaluation	35
Analytical Procedures Evaluation	61
References	72
Appendix 1. Use of the Pond Sampler and the COLIWASA	73
Appendix 2. Protocol for Conducting Extraction Procedure to Identify Hazardous Waste	77
Appendix 3. Williams/Beckert Drum and Tank (DAT) Sampler	81

FIGURES

Number		Page
1	Sampling grid showing site selection using the random two-digit number scheme for field composited samples.	14
2	Flow chart of the extraction procedure (EP) for the identification of a waste as hazardous by the toxicity characteristic.	17
3	Diagram of NBS tumbling-type extractor.	21
4	Levels of chromium contamination found in extraction blanks of distilled water and 0.1N acetic acid which followed hazardous waste samples.	56
5	Evaluation of apparatus contamination - Comparison of filtered and unfiltered aliquots (splits) of sequential acidified blanks	57
A-1	Pond sampler.	74
A-2	Composite liquid waste sampler (COLIWASA)	75
A-3	Williams/Beckert Drum and Tank (DAT) Sampler in drum sampling configuration	82

TABLES

Number		Page
1	Sites Sampled During FY 79: Identification of Sites, Facility Functions, Waste Streams Sampled, and Sampling Method	7
2	Wastes Sampled Using the Pond Sampler and COLIWASA.	13
3	Conditions of the Apparatus Abrasion/Contamination Study.	23
4	Municipal Sewage Sludge Samples Tested.	24
5	Evaluation of Pond Sampler: Results of pH and Percent Solids Analyses of Duplicate Aliquots, from Duplicate Samples of Wastes Taken at Five Locations on Pond 0, Site A	26
6	Pond Sampler: Means and Standard Deviations of Duplicate Analyses for pH and Percent Solids in Waste Samples from Pond 0, Site A.	26
7	Pond Sampler: Means and Standard Deviations of Data that Reflect Differences Between Two Waste Samples Taken at Each of Five Locations on Pond 0, Site A	27
8	Evaluation of Pond Sampler: Results of pH and Percent Solids Analyses of Triplicate Aliquots, from Duplicate Samples of Waste Taken at Five Locations on Pond 13, Site A.	27
9	Evaluation of Pond Sampler: Means and Standard Deviations of Triplicate Analyses for pH and Percent Solids in Waste Samples Taken at Five Locations on Pond 13, Site A.	28
10	Pond Sampler: Means and Standard Deviations of Data that Reflect Differences Between Two Waste Samples Taken at Each of Five Locations on Pond 13, Site A	28
11	Reproducibility of Pond Sampler: Mathematical Composite of First and Second Samples from each Location	31
12	Average Relative Standard Deviations (RSD's) for Various Levels of Sampling.	31
13	Evaluation of the Reproducibility of Composite Samples Obtained with a Pond Sampler - Non-Filterable Solids (%)	32

TABLES (Continued)

Number		Page
14	Evaluation of COLIWASA Sampling Method with Drummed API Separator Waste	33
15	Evaluation of the Reproducibility of Biphasic (Oil/Water) Liquid Samples Collected with a COLIWASA from Waste Drums	34
16	ICP Screening Analysis of EP Extracts: Approximate Elemental Composition of Extracts from Selected Waste Samples	36
17	Evaluation of Extraction Procedure (EP): Means and Standard Deviations for AA Analyses of EP Extracts for Barium, Chromium and Lead	37
18a	Evaluation of Extraction Procedure (EP): Average Means and Standard Deviations for AA Analyses of EP Extracts of Wastes from Ponds O and P, Site A.	39
18b	Relative Standard Deviations (RSD) of Extractions and Analyses for Selected Metals.	39
19	Extractor Comparison - Mean and Standard Deviation of Concentrations of Metals Extracted with Three Extractor Types.	41
20	Extractor Comparison - Variability Attributable to Sampling and Analytical Procedures	42
21	Extractor Comparison - "F Values" Calculated from Analyses of Variance.	43
22	Extractor Comparison - Difference Between Techniques, by Waste Type	44
23	Extractor Comparison - Results of Multiple Comparison Test to Rank Extraction Techniques.	45
24	Levels of Dissolved Metals (mg/l) in Acidified Blank Samples - Average of Triplicate Determinations.	47
25	Levels of Dissolved Metals Found in EP Extracts of Selected Waste Samples - Average of Triplicate Extractions	48
26	Levels of Dissolved Metals (Total) Found in Digests of Selected Waste Samples - Average of Triplicate Digests	49
27	Evaluation of Extraction Procedure (EP): Comparison of Mercury Concentrations (Cold Vapor AA) in Waste Sample Digests with those Estimated from EP Extracts	50

TABLES (Continued)

Number		Page
28	Evaluation of Background Concentrations of Elements from EP Extractors. Means and Standard Deviations of Triplicate Atomic Absorption Analyses of Acidified Blank Samples	52
29	Evaluation of Background Concentrations of Elements from Filtration Apparatus: Mean and Standard Deviations of Triplicate Atomic Absorption Analyses of Deionized Water Blank Samples	53
30	Evaluation of Background Concentrations of Elements from EP Equipment: Means and Standard Deviations of Atomic Absorption Analyses of Filtered and Extracted Acidified Blank Samples. . .	55
31	Sand Abrasion/Contamination Study - Concentrations of Chromium, Iron, and Barium Detected in Filtered and Unfiltered Reagent Blanks and Extracts of Acid-Washed Sand	58
32	Frequency and Magnitude of Contamination of Blanks (0.1N Acetic Acid) from Extraction and Filtration Apparatus Observed During Extractor Comparison Study.	60
33	Slope of Standards in Acetate Buffer and in Hazardous Waste Extracts Relative to Slope of Standards in Nitric Acid.	62
34	Quality Control Data: Comparison of Barium Spike Recovery. . . .	64
35	Quality Control Data: Comparison of Chromium Spike Recovery. . .	65
36	Quality Control Data: Comparison of Lead Spike Recovery.	66
37	Quality Control Data: Comparison of Mercury Spike Recovery . . .	67
38	Quality Control Data: Comparison of Silver Spike Recovery. . . .	67
39	Quality Control Data: Comparison of Arsenic Spike Recovery . . .	68
40	Quality Control Data: Comparison of Cadmium Spike Recovery . . .	68
41	Quality Control Data: Comparison of Selenium Spike Recovery. . .	69
42	Suppression of Atomic Absorption Pb Response by Undiluted EP Extracts of Pond O Samples Collected November 1979.	70

ACKNOWLEDGEMENTS

We wish to acknowledge the efforts of D. C. Hemphill, L. E. Holboke, and R. G. Seals in the early phases of this study. A special thanks to G. L. Bratten, for his extra efforts in providing much of the analytical data upon which this report is based, and to the Northrop Services Staff for their collection and extraction of waste samples.

INTRODUCTION

BACKGROUND

The rapid technological advances over the past several decades have significantly improved the American economy and lifestyle. However, improper disposal of hazardous wastes generated by industry as a result of these advances has created a hazard to both human health and the environment. Congress recognized this problem, and in October 1976 enacted legislation - the Solid Waste Disposal Act as amended by the Resource Conservation and Recovery Act (RCRA) of 1976 (and its amendments) - to control the transportation and management of hazardous waste. Under the authority of this legislation the U.S. Environmental Protection Agency (EPA) issued proposed regulations for the identification, transportation, and treatment, storage and disposal of hazardous waste (Federal Register, Vol. 43, No. 243, Dec. 18, 1978, pp. 58946-59028).

The regulations proposed (and subsequently published, FR 1980) under Section 3001 of the RCRA provide specific procedures for sampling, extraction, and analysis of wastes to identify those wastes which are hazardous due to the presence of leachable toxic components. Previous studies (in some cases with wastes of unknown history) have demonstrated the utility and validity of these methods. However, the EPA felt that additional studies with wastes from known industrial sources were warranted to better define the reliability and reproducibility of the proposed procedures. The EPA also recognized that a strong quality assurance program was required to assure, through standardization and quality control, that valid and defensible data are produced in response to the requirements in the regulations. This study was initiated in April 1979 to support these EPA requirements for the promulgation and enforcement of the hazardous waste regulations.

The objectives of this study were to:

- Evaluate the sampling, extraction, and analytical procedures described in the proposed regulations and determine their reproducibility and, in the case of the analytical procedures, their accuracy when used for identification of hazardous waste.

- Evaluate the application of the proposed extraction procedure to municipal sewage sludge and evaluate candidate extractor types for use with the proposed extraction procedure.

Efforts during FY 79 and early FY 80 were concentrated in two major task areas.

- Task 1. Evaluation of the Proposed Sampling Procedures. This effort was designed to evaluate the safety, reliability and reproducibility of the sampling procedures in the proposed Section 3001 regulations. The COLIWASA and pond sampler methodologies identified in the EPA report "Samplers and Sampling Procedures for Hazardous Waste Streams" (de Vera et al., 1980) were used to collect waste samples at typical waste sites. Any problems encountered were noted for later review and analysis. The waste samples were analyzed by physical and chemical methods to determine the reproducibility of the sampling procedures. The procedures to be evaluated and wastes to be sampled were determined jointly by the Office of Solid Waste (OSW) and the Environmental Monitoring Systems Laboratory-Las Vegas (EMSL/LV). In some cases modifications to the sampling procedures were developed and evaluated.

- Task 2. Evaluation of the Proposed Extraction Procedure (EP) and Analytical Methods. This effort was designed to evaluate the reliability and reproducibility of the Extraction Procedure (EP) described in the proposed Section 3001 regulations (Section 250.13(d)). It was also designed to determine the accuracy and precision of the analytical methods that were proposed for use with the EP using a variety of wastes. The wastes used in the evaluations were determined jointly by the OSW and the EMSL/LV. As an outgrowth of this work modifications to the EP and analytical methods have been recommended to the OSW and are reflected in the methods published in "Test Methods for Evaluating Solid Waste - Physical/Chemical Methods" (EPA-SW-846, 1980).

CONCLUSIONS AND RECOMMENDATIONS

The following conclusions and recommendations are based upon data presented and observations made during the study period:

- The method developed and standardized for sampling ponded wastes provided representative composite samples of the ponded wastes tested. "Pre-sampling" is recommended to estimate the heterogeneity of the waste and determine the number of samples or composites that should be taken.

- The Composite Liquid Waste Sampler (COLIWASA) provided reproducible samples from drums of the liquid wastes tested. Present design of the COLIWASA prevents adequate sampling of the bottom-most layer in drums or tanks. Here again, pre-sampling is recommended where practical. The alternative sampler design proposed (DAT Sampler) should be evaluated with liquid wastes in drums, tanks, or vacuum trucks.

- In intralaboratory studies, the proposed Extraction Procedure was found to be reproducible (RSD < ± 15% for the waste types sampled). However, interlaboratory studies indicate that clear, detailed, step-by-step protocols are needed to eliminate the possibility of misinterpretation or substitution of non-equivalant procedural elements. The EP should be evaluated to determine its applicability to oily or solvent-containing waste samples.

- A problem with contamination of acidified extracts by barium leached from glass-fiber prefilters was identified. Until prefilters are identified which do not contribute barium to the filtrate, it is recommended that a 100-ml portion of 0.1N acetic acid precede each waste sample through the prefilter and be stored for possible future use in determining blank correction for the sample. It is anticipated that such blank correction would only be used in the event that the barium levels in the samples exceed the criteria level for hazardous waste identification by the EP Toxicity Characteristic.

- Intra- and interlaboratory studies indicate that atomic absorption spectroscopy is an accurate and highly reproducible method for analysis of most inorganic components of waste extracts.

- Some problems in the analyses of Ba and Hg remain to be resolved. The method of additions is recommended to provide interference correction. Extracts very high in dissolved solids concentrations

may cause build-ups of material which alter the flame characteristic characteristics of the atomic absorption spectrometer. Such samples should be diluted prior to analysis.

- The three extractor types compared, i.e., the blade-type, NBS tumbler-type, and the wrist-arm shaker, provide comparable waste extracts when used in the Extraction Procedure (EP).

- When possible, EP extracts should be analyzed immediately, as some waste extracts are not stable over a period of hours or days.

- Applicability of the EP toxicity criterion for mercury should be reevaluated, as low EP recoveries may be misleading with respect to the toxicity hazard presented by wastes containing high levels of Hg in temporarily insoluble forms. Inadequate oxidation of mercury-containing EP extracts should be investigated to explain low mercury recoveries.

METHODS

SELECTION OF WASTES

The wastes and sites used in this study were selected with the active assistance of industrial and government facilities that generate a variety of both hazardous and non-hazardous wastes. The criteria for selecting a waste were initially determined by the ultimate use of the waste sample. For evaluating the sampling protocols it was determined that ideally the samples should have the following characteristics:

1. be heterogeneous,
2. be fluid (pourable at room temperature, 20°C),
3. be accessible to sampling using a liquid core sampler less than 10 feet long,
4. be available in sufficient quantity to allow at least 20 one-liter samples to be withdrawn without appreciably decreasing the amount of waste remaining (i.e., at least 800 liters), and
5. contain one or more components which can be used as indicators of whether or not a series of aliquots of these samples are equivalent.

For evaluating the EP, it was determined that ideally the samples should have the following characteristics:

1. be divisible into subsamples of 100-g size without introducing significant variability due to the subsampling procedure,
2. contain one or more components which can be used as indicators to determine whether a series of repetitive extractions, each one performed on a new subsample of the test material, gives equivalent indicator concentrations in the extracts,
3. contain approximately 25% w/w solids (i.e., separable by filtration and/or centrifugation), and
4. be available in a quantity sufficient to yield at least 5 kg of solids.

For evaluating the analytical procedures it was determined that the samples should have the following characteristics:

1. be from typical waste streams that are complex in nature,

2. contain one or more of the materials listed in 250.13(d)(1) (43 FR 58956),

3. be divisible into subsamples of 100 g size without introducing significant variability due to the subsampling procedures, and be available in quantities of at least 5 kg.

In many cases it was difficult to meet these criteria, either because the necessary information on the wastes was not available or no wastes with the desired characteristics were available from the facilities visited. Due to their concerns about the proprietary nature of the industrial processes that produced the wastes, many of the facility operators were hesitant to provide more than minimal information about the waste streams sampled. The wastes used in the study were selected to represent the most difficult materials for testing the sampling procedures, the EP, and the analytical procedures (i.e., they represented worst-case conditions for each procedure).

COLLECTION OF SAMPLES

During this phase of the study, eleven manufacturing and waste disposal sites were visited and 27 different wastes were sampled (Table 1). Brief descriptions of each site and waste follow:

Site A. This waste disposal facility segregates its wastes by type of industry. The liquid wastes are placed in open ponds where waste volume is reduced by natural evaporation. On rare occasions, there may be exchange of waste materials between adjacent ponds. Four ponds were sampled with the pond sampler at this site. Two of the ponds contained a liquid that the site operator identified as titanium dioxide process waste. The samples from these ponds were acidic (pH <1) and contained approximately 1% solids. The samples were brownish-green and could be separated into layers of an oily aqueous liquid and a dark-grey fine solid. The third pond was identified by the operator as an alkaline waste; however, the pH of the samples collected from different locations on the pond ranged from 2.3 to 7.7. These samples could be separated into layers of a greenish-yellow aqueous liquid and a light brown solid (approximately 6% solids). The fourth pond contained a waste identified by the operator as sulfonation tars. The samples collected could not be filtered by the proposed filtration procedure; however, they could be separated by the proposed centrifugation procedure into four layers (a thin dark-brown oil layer, a non-aqueous liquid layer, an aqueous layer and a very thin layer of solids). The fifth pond was another alkaline waste (pH > 10 for all composite samples) with a tea-colored aqueous phase, a brown-orange solid phase, and a brownish-black tarry layer that appeared in some of the samples.

TABLE 1. SITES SAMPLED DURING FY 79: IDENTIFICATION OF SITES, FACILITY FUNCTIONS, WASTE STREAMS SAMPLED, AND SAMPLING METHOD

Site	Function of Facility	Waste Stream Sampled	Sampler
A	Waste disposal	Ponds of TiO_2 process waste	Pond sampler
		Ponds of alkaline waste	Pond sampler
		Pond of sulfonation tars	Pond sampler
B	Paint manufacture	Drum of paint sludge	COLIWASA
C	Chemical manufacture	Drum of laboratory wastewater	COLIWASA
		Bags of pesticide waste	N.A.
D	Chemical manufacture	Inlet, grit chamber, and pond of an API oil separator	Pond sampler
		Dumpster of chromate oxidation paste	Pond sampler
E	Steel manufacture	Waste dust pile from electric furnace baghouse	Shovel
		Filter cake waste from blast furnace scrubber	Gloved hand
		Waste roll-mill scale pile from water treatment plant	Plastic bottle
		Tank truck of lime sludge from ammonia still	Shovel
F	Chemical manufacture	Alkyl chloride storage pit	Pond sampler
		Epichlorohydrin waste sump	Pond sampler
		Polymerized epichlorohydrin waste pits	Pond sampler
G	Chemical manufacture	Filter cake from chlorine/mercury process stream	Trowel

(continued)

TABLE 1. (Continued)

Site	Function of Facility	Waste Stream Sampled	Sampler
		Dumpster of asbestos waste, clean-up from chlorine process	Trowel
		Dry waste solids from chlorine/ mercury process	Trowel
H	Petrochemical manufacture	CPI* decant pit	Pond sampler
		Activated biosludge	Plastic bottle
I	Chlorine manufacture	Waste chlorine sludge pile	Trowel
J	Chemical manufacture	Industrial sewage filter cake from a truck	Trowel
		Tank of chromate reduction clarifier underflow	Bottle
		Drum of catalyst fines	Glass jar
K	Paint removal/ electroplating	Drums of plating waste identified as tin-lead solution	COLIWASA
		Drums of alkaline rust remover (red)	COLIWASA
		Drums of oil/water organic solvent mixture	COLIWASA

* CPI = Chemical Production Industries

Site B. Waste sludge from the solvent recovery operation was sampled at this paint production facility. A COLIWASA was used to obtain the samples from a 55 gallon drum. The samples were multicolored and viscous, had an odor typical of oil-based paint solvents.

Site C. Two wastes were sampled at this chemical manufacturing facility. One was an acidic (pH $\simeq$ 1) laboratory waste resulting from COD and other wastewater analyses performed in the facility's laboratory. The waste sample, collected from a 55 gallon drum with a COLIWASA, had a brown organic layer and

a dark-orange-brown aqueous layer. The second waste was a solid material (composite of excess quality control samples contained in plastic bags) from the production of a urea herbicide.

Site D. Samples were collected with a pond sampler from an API oil/water separator. The pond sampler was also used to scoop out samples of chromate oxidation paste from a dumpster at this chemical manufacturing facility. The samples collected from the API separator contained oily dark-brown solids mixed with water (pH = 8). The samples of chromate oxidation paste contained both a clear liquid layer (pH $\simeq$ 7.5) and a layer of brown solids (approximately 10% solids).

Site E. Four wastes were sampled at this steel manufacturing facility. (1) A waste-dust pile from an electric furnace baghouse was sampled with a shovel. The sample was a dark-brown mixture of fine and coarse solid material that had a light fluffy texture. (2) Filter-cake waste from a blast furnace scrubber was sampled with a gloved hand. The sample was a black paste that appeared to contain a small amount of water. (3) A pile of waste roll-mill scale, from one of the facility's water treatment plants; samples were scooped directly from the surface of the pile with a wide-mouth plastic bottle. The sample was a mixture of crystalline solids (large and small pieces) that had a disagreeable odor. (4) Lime sludge from an ammonia still was the final waste sampled at this site. This sample, taken with a shovel, was a light-brown mixture of solids in an alkaline liquid (pH = 11.6).

Site F. Three wastes were sampled with a pond sampler at this organic chemical manufacturing facility. (1) The first sample, collected from an alkyl chloride storage pit, was a rust-brown liquid (pH = 7) containing suspended solids. (2) The second sample, collected from an epichlorohydrin waste sump, contained two layers, a liquid (pH = 9.7) and a gray solid. According to the plant operator, this waste was a mixture of caustic solids, phenols, and epichlorohydrin. (3) The remaining samples were taken from each of two pits of polymerized epichlorohydrin (epoxy resin). These samples contained sandy white solids in an alkaline aqueous liquid (pH $\simeq$ 12).

Site G. Three samples were collected from a chlorine manufacturing plant which employs the mercury cell process. These samples were obtained using a small trowel. The filter cake cell sample consisted of two phases, water (pH = 5.6) and a light-brown solid. The second waste contained asbestos solids in an alkaline aqueous liquid (pH = 9.8). Chlorine-mercury process-stream waste (dry) was sampled on a subsequent visit. This sample consisted of chunks of dry waste with three distinct layers (thin white and tan layers; bulk was gray in color).

Site H. An activated biosludge and a waste from a CPI (Chemical Production Industries) decant pit were sampled at this petrochemical facility. The biosludge sample (taken from a faucet in the pipeline from the settling tank) was a brown liquid (pH = 6.4) that contained a high concentration of suspended solids. The decant pit waste was from an adjacent oil refinery process stream. It was sampled with a pond sampler and yielded a black, oily liquid sample that had a disagreeable odor. The high concentration of organics in this sample prevented measurement of its pH.

Site I. A waste pile of chlorine process sludge was sampled with a small trowel at this chlorine manufacturing facility. The waste was a dark gray, paste-like solid.

Site J. Three wastes were sampled at this chemical manufacturing facility. (1) A sample of an industrial sewage filter cake was obtained from an open truck with a small trowel. (2) A sample (pH = 8.7) of liquid waste from a chromate reduction clarifier underflow was obtained from a faucet in the pipeline leading from the settling tank to a treatment plant. (3) The third waste sample was obtained (with a glass jar used as a scoop) from a drum of catalyst fines used in a proprietary chemical process.

Site K. Three wastes from a paint stripping and electroplating operation were sampled at this facility. The wastes were stored in drums and were awaiting disposal by a commercial disposal company. The samples were obtained with the COLIWASA. (1) A plating waste identified as a tin-lead solution, yielded greenish-yellow acidic (pH <1) aqueous samples that contined some suspended solids. (2) An alkaline rust remover waste, identified as "red" because of its color, yielded dark red alkaline (pH $\simeq$ 12) samples. (3) The samples obtained from an oil/water/solvent waste had three phases - an oily surface layer, a tea-colored aqueous layer (pH $\simeq$ 6.5) and a solid layer.

The considerable time and effort expended in locating facilities having suitable wastes and in obtaining approval from those companies to obtain samples delayed initiation of the laboratory experimental efforts. In several cases the industrial operators were concerned about the proprietary nature of their process and required a confidentiality agreement from the EPA contractor who was actually collecting the samples. Corporate approval of such agreements resulted in considerable delay and disrupted the sampling schedule.

SHIPMENT AND STORAGE OF SAMPLES

The samples collected in the field were sealed in glass jars (caps had Teflon inserts). The jars were then sealed in individual plastic bags which in turn were packed in a specially constructed shipping container. In the shipping container, the jars were separated by dividers and cushioned with vermiculite packing material. The containers were locked and shipped (under chain-of-custody) via either Federal Air Express or truck to the laboratory in Las Vegas, NV. The samples were stored at room temperature (21° -27°C) until use. No steps were taken to preserve the samples.

SAMPLING PROCEDURE EVALUATION

Rationale

In designing the sampling procedure evaluations, three basic guidelines were followed:

1. The purpose of the study is to evaluate the methods and tools that were specifically developed for this regulatory program (i.e., the pond sampler and COLIWASA).

2. The wastes to be used should be among those that are the most difficult to sample (e.g., a worst-case situation such as a multiphase waste that contains immiscible liquids and solids of differing density and particle size).

3. The samples should be obtained by personnel who are not knowledgeable about the variability or detailed physical or chemical characteristics of the specific wastes in order to simulate non-expert use of the sampling methodology.

The sampling methods in Appendix I of the proposed regulations included both ASTM methods and protocols from the EPA report "Samplers and Sampling Procedures for Hazardous Waste Streams" (deVera et al., 1980). It was decided not to evaluate the ASTM procedures because the Agency has confidence that those standard procedures have undergone sufficient evaluation through general use with materials of the type indicated in Appendix I of the proposed regulations. However, neither the protocols described in the report nor the pond sampler and COLIWASA had been evaluated for sampling wastes under field conditions. They were therefore selected for evaluation in this study. The samplers were used in accordance with the protocols described in the aforementioned EPA report and are described in Appendix 1 of this report. This study was designed to determine the ability of these procedures to obtain representative samples from waste sources. It should be emphasized that the procedures were not being tested for use in sampling a waste over a period of time (i.e., to determine if the waste source changes with time).

In developing a method for sampling wastes from pits, ponds, or lagoons, a number of factors must be considered:

- The method should provide as representative a sample of the waste as practical, assuming the fact that the waste may be extremely heterogeneous, present in great volume, or largely inaccessible to the sampling personnel.

- The method should be simple to use, reproducible in its application, and statistically sound.

- The method should have broad application in its basic form, but also be sufficiently flexible to allow for modification when, in the judgment of the on-site sampling personnel, a waste is particularly heterogeneous, the distribution of visible waste components is non-random, or the morphology of the waste site is complex.

- The method should be so ordered as to ultimately provide the data analyst with a logical data set readily amenable to analysis by accepted statistical techniques.

As part of this study, a method was developed for collecting representative samples of ponded wastes. This method combines a systematic sampling program with the use of the pond sampler. In order to evaluate the ability of this method to provide samples which are representative of the waste, the reproducibility of the method was determined using two different ponded wastes. Since it is impossible to analyze a whole pond so as to obtain a "true" value for the pond composition, the approach selected used the concept that if replicate composite samples collected from a pond are the same then the individual composite samples could be considered to be representative of the whole.

Experimental Design

The experimental design for the sampler evaluations was developed with the recognition that it is very difficult to obtain representative samples from a heterogeneous waste source, especially in the case of large disposal ponds or pits. A statistical approach must be taken to obtain and analyze the minimum number of samples that are required to assure, with a stated degree of confidence, that the sample data are representative of the waste source.

The initial experimental design was based on a one-sided parametric test that assumed a 4% significant deviation. This design required 39 samples from the source (i.e., 39 samples/pond) to yield data with 95% confidence of avoiding Type I and Type II errors. (Type I errors, i.e., rejecting the hypothesis of no difference between means of sample populations when, in fact, no difference exists, are minimized by setting the critical probability level for chance differences very low, e.g., 5% or even 1%. Type II errors, i.e., accepting the hypothesis of no difference between means of sample populations when, in fact, a real difference exists are minimized by increasing the sample size and hence the discrimination of the test.) This approach was later modified to provide the appropriate number of samples required for a hierarchical (nested) analysis of variance (ANOVA) and to define the sources of variability present in the sequence of sampling and analysis.

Table 2 identifies the waste and regimen selected for evaluation of the pond sampler and the COLIWASA. The pond sampler was used to sample five different waste sources at two sites, and the COLIWASA was used to sample five different waste sources at three sites. The overall strategy of this effort was to determine the ability of the sampling procedures to collect reproducible samples from a given waste source. No attempt was made to determine the changes that occur if a waste is sampled over a given period of time (e.g. comparisons of samples from a single source sampled on different dates).

Percent non-filterable solids, pH, and aqueous:non-aqueous composition were initially selected for testing the reproducibility of the sampling procedures because these parameters are easy to determine and represent sample characteristics that affect the properties of the waste. For example, while the elemental concentration in each phase may not change with location, the concentration observed with the EP will change if the relative quantity of each phase in the sample changes. Non-filterable solids content was considered a particularly important measurement parameter for determining the reproducibility of samples obtained with the pond sampler, because

TABLE 2. WASTES SAMPLED USING THE POND SAMPLER AND COLIWASA

Location	Waste	Sampling Regimen
	POND SAMPLER	
Site A	TiO_2 process waste	2 ponds, 10 samples/pond 1 pond (revisited), 12 composite samples
	Alkaline waste	1 pond, 10 samples 1 pond, 12 composite samples
	Sulfonation tars	1 pond, 10 samples
Site F	Polymerized epichlorohydrin waste	2 pits, 20 samples/pit
	COLIWASA	
Site C	Laboratory wastewater	4 drums, 3 samples/drum
Site D	API separator waste	15 drums, 3 samples/drum
Site K	Plating waste, tin/lead	3 drums, 3 samples/drum
	Alkaline rust remover	3 drums, 3 samples/drum
	*Oil/water/solvent waste	3 drums, 3 samples/drum

*This waste not analyzed during Phase I.

considerable operator judgement is required to obtain uniform samples from the sediment-water interface. However, wet-weight measurements of solids - routinely used in the EP to determine whether a minimum percent solids level is exceeded - were not considered precise enough to use in determining sample uniformity.

The pH of the aqueous phase of each liquid sample was measured with a laboratory pH meter. The pH meter was calibrated with standard buffers at pH 4, 7, and 10 just prior to the measurements and rechecked after the measurements were completed. Percent non-filterable solids were determined in accordance with the "Non-filterable Residue Method 160.2," Methods for Chemical Analysis of Water and Wastes (EPA 1979). Duplicate or triplicate (when sufficient sample volume was available) aliquots of each sample were analyzed to determine the relative magnitude of variability that can be attributed to the laboratory analytical procedures.

Pond Sampler--

A sampling plan was developed -- for evaluating reproducibility of the "pond sampler" -- based upon selecting random sampling locations (within reach from accessible shoreline areas of the waste pond sampled) and combining samples from five such random locations to form field-composite samples. Twelve such composite samples from each of two ponds, identified as Pond 0 and Pond 12 (i.e., a total of 60 sample locations in each pond), were obtained by the following procedures:

- The accessible shoreline of the pond to be sampled was divided into six equal stretches (i.e., the shoreline of 300 meters was divided into six stretches of 50 meters each) and marked with stakes.

- Each of the stretches was marked off into three equal segments (the resulting segments in our study were 16-2/3 meters in length) (Figure 1.)

- Three "zones" were established within each segment (nine zones per stretch -- shoreline to 1 meter; 1 meter to 2 meters; and 2 meters to 3 meters from shore).

- To determine sampling locations, a random series of five two-digit numbers was assigned for each field-composited sample. Each number denoted the stretch (first digit = 0 to 5) and zone (second digit = 1 to 9) from which a 600 ml "pond sample" was dipped (see Figure 1). The five 600-ml subsamples were composited in a clean 1-gallon jar and sealed with a Teflon-lined screw cap.

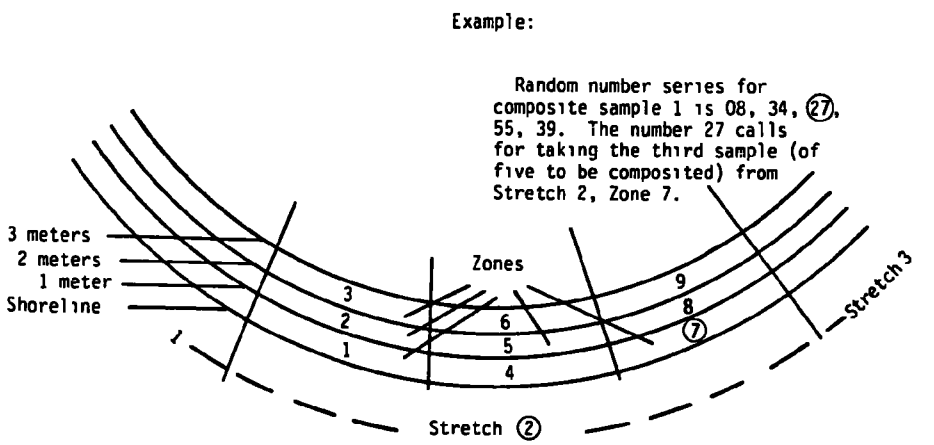

Figure 1. Sampling grid show ing site selection using the random two-digit number scheme for field composited samples.

- A total of 60 subsamples was collected to produce the 12 composite samples.

- Using the sampling "by-the-numbers" method, a case of four 1-gallon jars was filled during each of three circuits around the pond.

The sampling regime could be readily followed by relatively inexperienced sampling personnel.

COLIWASA--

Reproducibility of sampling from drums with the COLIWASA was evaluated using two different types of waste. The first waste consisted of 15 drums of a liquid material collected from an API separator. Three samples were taken from each of the 15 drums. The percent non-filterable solid content of each sample was the average obtained by analyzing three aliquots from each sample. Sample-to-sample variability was used to estimate the reproducibility of the sampling procedure. The second waste was a biphasic oil/water mixture with no non-filterable solids. Three samples were taken from each of three drums, and the oil:water ratio determined on three aliquots from each sample. The average heights of the oil and water phases were determined and an oil:water ratio calculated for each aliquot. The average of the three aliquots was used in the reproducibility determination. The reproducibility of the sampling was thereby determined by analyzing the sample-to-sample variability of the oil:water ratio.

EXTRACTION PROCEDURE (EP) EVALUATION

Rationale

The Extraction Procedure (EP) is a key parameter in the screening mechanism designed to identify those wastes that require special management because of their potential to cause harm to human health. It must be emphasized that the EP is not intended to identify the total concentration of any toxic contaminant in the waste, but rather the concentration of the toxicant that could occur in groundwater below the disposal site as a consequence of mismanagement. The approach taken to evaluate the EP was designed to:

1. determine the reproducibility of the EP described in the proposed regulations (43 FR 58956),

2. determine if the procedure, as written in the proposed regulations, is explicit enough for use by non-experienced personnel to produce valid data,

3. determine the equivalency of a variety of extractors that could be used with the EP,

4. determine if the filtration and centrifugation methods are suitable alternatives for liquid-solid separation,

5. gain additional experience with the methods as background for preparation of guidelines manuals to assist those who will use the EP.

Experimental Design

The Extraction Procedure was used in essential accordance with the description given in the proposed regulations (see Appendix 2). A flow chart of the sample treatment followed for the EP is shown in Figure 2. As shown, triplicate aliquots (minimum of 100 g each) are obtained from a stirred waste sample and are separated into solid and liquid phases by either filtration or centrifugation. The liquid phase is stored under refrigeration until the solid phase has been extracted. The solid phase is then weighed without drying, placed in a suitable extraction apparatus along with a volume of deionized water equal to 16 times the weight of the wet solid phase and agitated. For slurries with an initial pH > 5, the pH of the slurry is continuously adjusted to 5.0 ± 0.2 with 0.5 N acetic acid during agitation. However, the maximum amount of acid that is added during the EP is 4 ml per gram of solid phase, even if the pH of the solution does not reach 5.0 ± 0.2. For samples with an initial slurry pH of <5, extraction proceeds without addition of acid. Agitation is continued for 24 hours. The slurry is then filtered and any solid material is discarded. The filtrate is adjusted with deionized water to a volume equal to 20 times that occupied by water at 4°C equal in weight to the solid phase added to the extractor. Note that the procedure described in the proposed regulations calls for this volume adjustment prior to filtration. Differences in the resulting volume are negligible by the two methods (maximum worst-case volume difference is 5%). This solution is then added to the original liquid phase to produce the extract. The EP extract is split into two samples; one is acidified to preserve it for elemental analysis and the other is stored under refrigeration for organic analysis.

The EP was evaluated with wastes collected from three different ponds. Each waste was extracted at least once and screened using atomic emission spectroscopy to identify the major extractable inorganic components that might be used for evaluation of the EP. Additional wastes were extracted in a study comparing extractor types (see under Special Studies).

Triplicate aliquots of each sample were extracted as described in Appendix 2. The extracts were analyzed by standard atomic absorption spectroscopy methods described in the latest edition of Methods for Chemical Analysis of Water and Wastes, EPA-600/4-79-020 (this edition supersedes the 1974 edition referenced in the proposed regulations). The results were averaged to determine a mean and the standard deviation for the triplicate analyses. The relative standard deviation of the average was then used as a measure of the reproducibility of the EP.

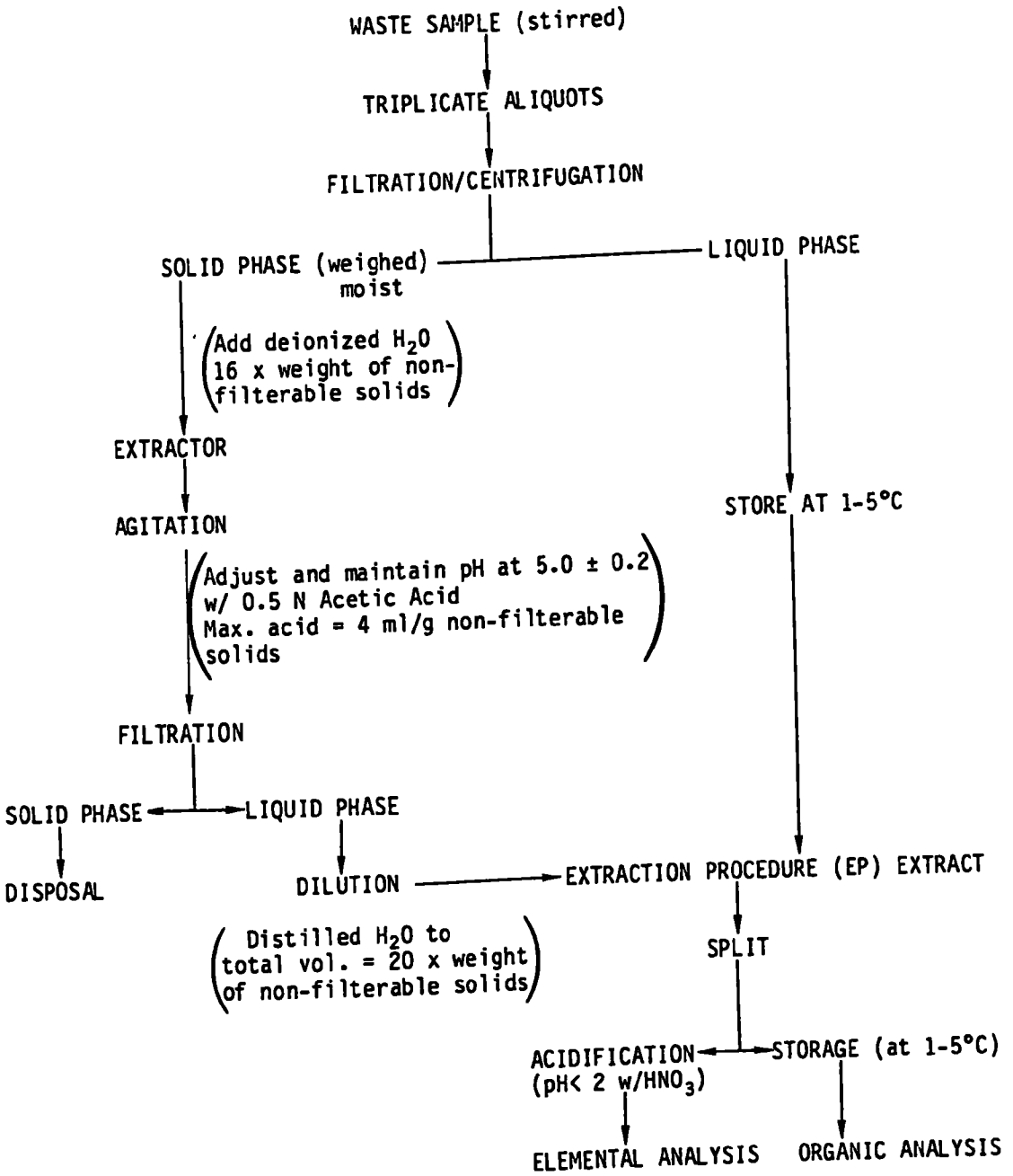

Figure 2. Flow chart of the extraction procedure (EP) for the identification of a waste as hazardous by the toxicity characteristic.

Special Study - Comparison of Three Extractor Types

Rationale--

The rotary stirrer extractor was compared with two other extraction apparatus to evaluate the variability of these methods with respect to various waste types. It was anticipated that not all waste types would be adequately extracted using the proposed blade-type extractor. Tumbling-type extractors -- provided to us by the National Bureau of Standards -- and wrist-arm shakers were compared with the blade-type extractions in this special study.

Experimental Design--

Three sample types were extracted with each extraction method. The samples averaged 100 percent solids, 8.7 percent solids, and 2.5 percent solids. Twelve composite samples of each waste type were tested. Nine equal aliquots were taken from each sample; three aliquots were then extracted with each type of extractor. Thus, 108 separate extractions per waste were completed. The quantitative analysis of metals was done in duplicate on these extracts. The statistical program then compared the significance of the variability among the samples, the extractors, and the analytical concentrations of the various metals.

The model associated with this experiment is:

$$Y_{ijkl} = \mu + S_i + t_{j/i} + a_{k/i/j} + \Sigma_{ijkl}$$

Where: μ represents a general mean

S_i i=1,2,3,....12, represents the effect of "samples". This factor is a <u>random effect</u> factor. (Instead of having 12 samples, we could have 10, or whatever.)

$t_{j/i}$ j=1,2,3, represents the effect of "techniques". This factor is of <u>fixed effect</u> because we are specifically interested in these three (3) techniques.

$a_{k/i/j}$ k=1,2,3, represents the effect of "aliquots". This factor is of <u>random effect</u>.

Σ_{ijkl} l=1,2, represents the variation of the analytical measurements.

The above design for sample and data collection is a hierarchical or "nested" design. In this design the effect of each one of the factors can be tested through the F-Test of the ANOVA table. One of the most important factors to be tested is the techniques. When, from the ANOVA table, a significant difference between techniques was found, i.e., there was a nonzero effect of the factor called "techniques," the Student-Newman-Keuls (SNK) multiple comparison was used to decide which technique was the best and second best. The SNK procedure is as follows:

1. First, order the averages from each technique from smaller to larger. Here $\bar{x}_{T_1}$ is the average for the first technique, and $\bar{x}_{T_2}$, $\bar{x}_{T_3}$ are the averages for the second and third techniques, respectively. To work through an example, sample data are ordered from smaller to larger:

$$\bar{x}_{T_3} = 0.1661;\ \bar{x}_{T_2} = 0.2331;\ \bar{x}_{T_1} = 0.3132$$

2. Then compare $\bar{x}_{T_3}$ with $\bar{x}_{T_1}$ (smallest with largest) using:

$$q\alpha,3,12 = \frac{\bar{x}_{T_1} - \bar{x}_{T_3}}{\sqrt{\frac{MS}{12}}}$$

Where: MS = mean square (from analysis of variance) for aliquots <u>within</u> techniques <u>within</u> samples (use value of 0.0107 for the MS in this sample exercise).

q* = the q statistic, with Studentized range distribution.

*For additional information on the q statistic and use of the SNK procedure, see Myers 1972.

α = confidence level selected. (Use 0.025 level for this example to determine whether the probability -- that differences noted in technique means can be ascribed to chance alone -- is greater or less than 2.5 percent.

3,72 = degrees of freedom for the MS

therefore:

$$q = \frac{0.3132 - 0.1661}{\sqrt{\frac{0.0107}{12}}}$$

$$q = \frac{0.1471}{0.0299} = 4.92$$

3. For testing the hypothesis:
H_o: $\mu_{T_1} = \mu_{T_3}$ versus H_a: $\mu_{T_1} > \mu_{T_3}$

take from the Studentized range tables the value of $q_{.025,3,72} = 3.79$

4. Comparing the two values, the calculated q (4.92) is larger than the table value (3.79) inferring that $\mu_{T_1} > \mu_{T_3}$. We can therefore

reject the null hypothesis (H_0) that there is no difference between technique means and conclude that one of the techniques is better than the other.

5. Continuing, H_0: $\mu_{T_1} = \mu_{T_2}$ versus H_a: $\mu_{T_1}, > \mu_{T_2}$

$$q = \frac{0.0801}{0.0299} = 2.678$$

$$q_{.025,\ 3,72} = 3.620$$

6. Since the calculated q (2.678) is less than the table value (3.620), the H_0 hypothesis cannot be rejected at the level 0.025. This means that there is not enough evidence to say one technique is better than the other.

7. If the null hypothesis can be accepted for the extreme values of the ordered means, no additional comparisons need be made.

The handling and treating of samples for this comparison study were carried out as in our previous extraction studies, with the following exceptions:

1. The aliquots for the wrist-arm shaker had to be further divided due to the small flask volume. Larger flasks were found to be impractical since they tended to break during shaking when filled to capacity. The addition of acetic acid and monitoring of pH was more difficult since the aliquot fractions in the small flasks did not necessarily require equal volumes of acid to maintain the acceptable pH range.

2. When extracting solids from samples with low solid (e.g., <2%) contents, the amount of liquid added to the solids from a 100-g sample was frequently so small as to be adsorbed on the filter paper or evaporated during the 24-hour extraction time. Therefore, for several aliquots there was no extraction filtrate to add back to the original sample filtrate. This evaporation effect was most pronounced with the blade-type extractor. If final volume adjustment had been made prior to the final filtration step (per proposed method) this problem might have been avoided.

3. The combined volume of 100-gram subsample of biosolids -- from high-bulk solid samples -- and the required extractant exceeded the 1/2-gallon capacity of the NBS extractor bottles. Eighty-gram subsamples proved to be the working maximum with waste of this type and were therefore adopted for extraction of the remaining eleven samples with the NBS extractor.

The EMSL/LV Hazardous Waste Laboratory has two NBS tumbling-type extractors. Each bottle holds four 1.9 liter (1/2 gallon) round plastic Nalgene bottles. These bottles are held in an aluminum frame by a collar which is tightened with Allen screws. A low-speed, high-torque motor rotates the frame through 360 degrees at the rate of 30 revolutions per minute (Figure 3).

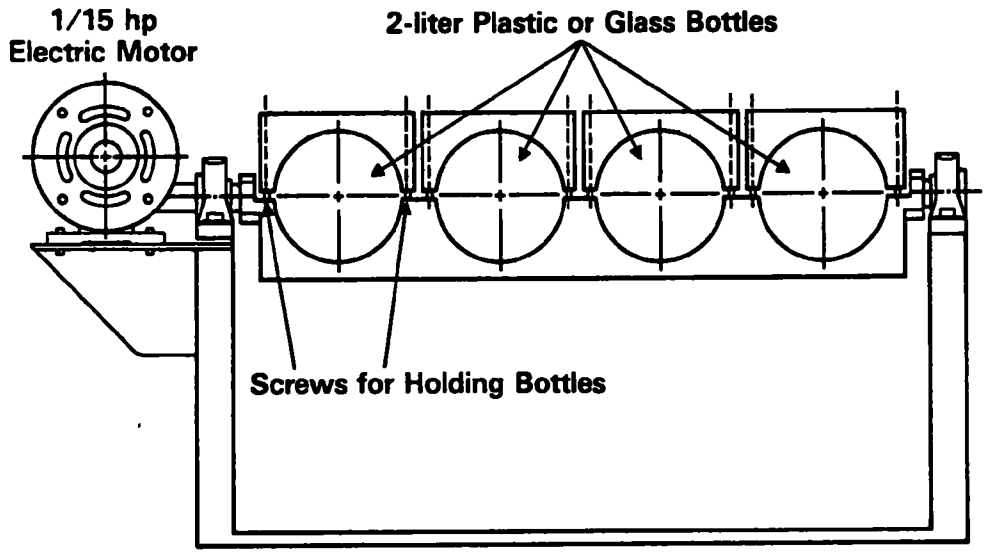

Figure 3. Diagram of NBS tumbling-type extractor.

Three standard laboratory wrist-arm shakers -- clamped to the lab bench and holding up to 12 flasks each -- were utilized in this study. The mechanical action simulates human wrist action; it oscillates through an arc of approximately 40° (20° to each side of vertical) during each cycle. The rate of agitation was 312 cycles per minute.

Special Study - Background Interferences

Additional experiments were performed to identify any background interferences that might result from the equipment used in the EP. The filtration equipment and the extraction apparatus used are made from Type 304 and Type 316 stainless steel, respectively. Since the samples and extracts are in contact with stainless steel surfaces, there is some concern that use of such construction materials might result in high background concentrations of certain metals (especially chromium) in the EP extract. Two groups of blank samples, one consisting of deionized water and the other of 0.1 N acetic acid (400 ml of 0.5 N acetic acid to 1600 ml of deionized water), were put through the EP and analyzed by ICP or AA spectrometry to determine what metals (and at what levels) might be added to the extracts from the equipment.

Apparatus Abrasion/Contamination Study--

A second series of blanks were run to determine potential contributions of metals from the extractors under worst case conditions. Conditions for this study (Table 3) deviated from the standard Extraction Procedure in order to provide "worst case" conditions. Samples (50 g) of fine, acid-washed

"Ottawa Sand" were placed in each of four blade-type stainless steel extractors and two polyethylene tumbling-type extractors. The polyethylene extractors served as a blank for the sand since their non-metallic nature would preclude their contributing measurable metal to the extract.

Fine sand was employed since initial attempts to extract coarse (2-3 mm) aquarium sand in the blade-type extractors used in our laboratory were unsuccessful. The extractor blades bound up and could not handle the heavy load. Even at reduced sample sizes, the blades would catch larger sand grains and seize. The ability of a particular extractor to handle the specific materials present in wastes being tested should thus be considered by the operator when selecting the type of extractor to use.

The fine sand was extracted with dilute nitric acid (pH = 2.5) in two of the blade-type extractors and one NBS extractor; the sand in two other blade-type extractors and one other NBS extractor was extracted with a dilute solution of acetic acid (pH = 5.0). The resulting extracts were split; one-half of each was filtered, while the other half was not filtered following the extractions.

The blade-type extractors -- at the specified speed of 40 rpm -- were unable to suspend the fine sand. Therefore, the blade speed was increased to 80 rpm and the extraction period shortened to 3 hours. The combination of sand and acidic extractant represented a rigorous test of the ability of the apparatus to withstand abrasion and dissolution of metallic components.

Special Study - Sewage Sludge Extraction and Analysis

Rationale--

This study was undertaken to evaluate, on sewage sludge samples, the performance of the toxicity extraction procedure (EP) described in the Federal Register (Dec. 18, 1978) and the analytical procedures for the determination of arsenic, barium, cadmium, lead, chromium, and selenium. Samples of the sludges investigated (Table 4) were sent from the sludge-producing facilities to both the EMSL/LV and the Municipal Environmental Research Laboratory, Cincinnati (MERL/Cin) for extraction and analysis. The results of the two laboratory efforts were then compared to evaluate the interlaboratory reproducibility of the proposed procedures with sewage sludges. One set of aliquots of the seven sludge samples was extracted using the EP, and another set of aliquots was digested. Both the extracts and the digests were analyzed for the elements of interest.

Experimental Design--

Triplicate aliquots from the seven samples were extracted by the EP. Another set of triplicate aliquots per sludge was digested with nitric acid following EPA procedure 4.1.3 in "Methods for Chemical Analysis of Water and Wastes," EPA-600/4-79-020, March 1979 (EPA 1979).

TABLE 3. CONDITIONS OF THE APPARATUS ABRASION/CONTAMINATION STUDY

Material Extracted	- Fine "Ottawa" laboratory sand, acid-washed
Extractor Used	- Blade-type, stainless steel
	- NBS tumbling-type, polyethylene
Extraction Reagents	- Nitric acid solution, pH = 2.5
	- Acetic acid solution, pH = 5.0
Filtration Apparatus	- Nuclepore 142-mm diameter, stainless steel pressure filtration unit
Extractor Conditions	- 3-hour duration at 80 rpm (Blade-type), or
	- 3-hour duration at 30 rpm (NBS tumbler)
Extract "splits"	- one-half of extract filtered
	- one-half of extract unfiltered
Blanks	- Extraction reagents, filtered and unfiltered
Analyses	- Atomic Absorption Spectrometry, for Ba, Cr and Fe

ANALYTICAL PROCEDURES EVALUATION

Rationale

The analytical procedures proposed for analysis of the EP extracts are standard methods for analysis of water, wastewater, or industrial effluents in use by the Agency. Since publication of the proposed regulations in December 1978, the Agency has updated these procedures to take into account the latest improvements in methodology. While these improved methods have been used for the analysis of aqueous effluents and liquid wastes, they have not been extensively tested with samples of industrial "solid waste" or EP extracts of such waste. DeWalle et al. have reported intra- and interlaboratory data for several of the methods applied to leachates collected from waste sites.

This phase of the study was therefore designed to determine the accuracy and reproducibility of these updated methods when used to analyze "solid wastes" -- which can include aqueous solutions, slurries, sludges, multiphasic waste materials, etc. -- and EP extracts.

TABLE 4. MUNICIPAL SEWAGE SLUDGE SAMPLES TESTED

Sample Number	Sample Type	Physical Description
1	Combined sludge	Homogeneous liquid sludge, dark grey
2	Sludge	Moist solid, dark brown
3	Sewage sludge	Moist plastic solid, black
4	Primary sludge	Heterogeneous sludge, solid and liquid phases, light grey
5	Digested sludge	Homogeneous liquid, black
6	Heat-dried fertilizer	Fine granules, dark brown
7	Landfill sludge	Solid, large and small lumps, dark brown

Experimental Design

For the analysis of aqueous wastes and EP extracts, the atomic absorption (AA) methods (EPA 1979) for arsenic, barium, cadmium, chromium, lead, mercury, selenium and silver were used. These methods were evaluated -- with standard solutions and with EP extracts from various wastes containing one or more of the elements of interest -- to determine their accuracy and precision.

Triplicate aliquots of the EP extracts were first analyzed. Aliquots were then spiked with known concentrations of the elements of interest and re-analyzed. The mean and standard deviation of the triplicate results obtained for each spiked sample were used to evaluate the accuracy and reproducibility of the analytical method. Spike recovery is calculated by dividing the mean analytical result (less the concentration of that element in the unspiked sample) by the spike concentration, and multiplying by 100 to obtain percent recovery. The relative standard deviation is determined by dividing the standard deviation by the mean; the resulting value is muliplied by 100 to express as a percentage. Acceptable analytical methods should accurately and reproducibly indicate the increase in concentrations of the elements in the spiked samples. Spike recoveries were determined for each element in a number of sample matrices.

RESULTS AND DISCUSSION

SAMPLING PROCEDURES EVALUATION

Pond Sampler

For initial evaluation of the Pond Sampler, four ponds were sampled at site A (two samples from each of five locations on each pond). Samples from two of the ponds, Pond 0 and Pond 13, were analyzed for pH and percent solids.

Four factors contribute to the overall reproducibility observed in the analytical data obtained with the pond sampler. They are:

1. the homogeneity of the waste in the pond sampled;
2. the effect of the collection of the first sample on subsequent samples collected at the same location;
3. the reproducibility of the sampling procedure;
4. the precision of the analytical procedure used to determine the parameter of interest in each sample.

The data obtained with the pond samples (Tables 5 and 8) can be analyzed to estimate the contribution of these four factors to the overall reproducibility of the pond sampler. Factor 1, the homogeneity of the waste in the pond, is reflected in the differences between samples from different locations on the pond (i.e. differences between the first sample taken at each location - Tables 6 and 9),. The differences between two samples taken at the same location (Tables 7 and 10) reflect Factor 3, the reproducibility of the sampling procedure, and Factor 2, the effect (if any) the collection of the first sample has on the second sample. The precision of the analytical procedure, Factor 4, can be estimated by comparing the results from replicate analyses of the same sample (Tables 6 and 9).

The data for the titanium dioxide process waste from Pond 0 are shown in Table 5. The procedure for pH required insertion of a pH electrode into the aqueous phase, whereas the procedure for percent solids required collection of aliquots from the sample and analysis of those aliquots. Because of the limited sample volumes, only duplicate aliquots were analyzed for each sample. The pH of the Pond 0 samples was very low (pH <1), thus the measurements with the pH meter were not considered reliable enough to identify differences between locations on the pond. However, the percent solids data can be used for this purpose. Differences between aliquots from the same sample (Table 5) reflect the reproducibility of the laboratory analytical procedure for

TABLE 5. EVALUATION OF POND SAMPLER: RESULTS OF pH AND PERCENT SOLIDS ANALYSES OF DUPLICATE ALIQUOTS, FROM DUPLICATE SAMPLES OF WASTES TAKEN AT FIVE LOCATIONS ON POND O, SITE A

Sample*	pH	Percent Solids	Sample	pH	Percent Solids
1A	0.23	1.24	3B	0.40	0.92
	0.23	1.26		0.46	1.83
1B	0.34	1.09	4A	0.51	1.54
	0.31	1.28		0.44	1.61
2A	--**	0.82	4B	0.37	--**
	--**	1.28		0.38	1.19
2B	0.22	2.09	5A	0.43	1.74
	0.17	1.28		0.43	1.84
3A	0.30	--**	5B	--**	1.55
	0.19	--**		--**	1.80

* Number = location on pond; A B = 1st and 2nd sample at that location.
** Data not reported - known discrepancies in analytical procedure.

TABLE 6. POND SAMPLER: MEANS AND STANDARD DEVIATIONS OF DUPLICATE ANALYSES FOR pH AND PERCENT SOLIDS IN WASTE SAMPLES FROM POND O, SITE A

	pH				Percent Solids			
	First sample		Second sample		First Sample		Second Sample	
Location	$\bar{x}$	s(n = 2)	$\bar{x}$	s(n = 2)	$\bar{x}$	s(n = 2)	$\bar{x}$	s(n = 2)
1	0.23	0.00	0.33	0.02	1.25	0.01	1.19	0.13
2	--	--*	0.20	0.04	1.05	0.33	1.69	0.57
3	0.25	0.08	0.43	0.04	--	--*	1.38	0.64
4	0.48	0.05	0.38	0.01	1.58	0.06	--	--*
5	0.43	0.00	--	--*	1.79	0.07	1.68	0.18
Average	0.35		0.34		1.42		1.48	

* Data not reported - known discrepancies in analytical procedure.

TABLE 7. POND SAMPLER: MEANS AND STANDARD DEVIATIONS OF DATA THAT REFLECT DIFFERENCES BETWEEN TWO WASTE SAMPLES TAKEN AT EACH OF FIVE LOCATIONS ON POND O, SITE A

	pH		Percent Solids	
Location	$\bar{x}$	s(n = 2)	$\bar{x}$	s(n = 2)
1	0.28	0.07	1.22	0.04
2	--*	--	1.37	0.45
3	0.34	0.13	--*	--
4	0.43	0.07	--*	--
5	--*	--	1.74	0.08
Average	0.35		1.44	

* Data not reported - known discrepancies in analytical procedure.

TABLE 8. EVALUATION OF POND SAMPLER: RESULTS OF pH AND PERCENT SOLIDS ANALYSES OF TRIPLICATE ALIQUOTS, FROM DUPLICATE SAMPLES OF WASTE TAKEN AT FIVE LOCATIONS ON POND 13, SITE A

Sample*	pH	Solids (%)	Sample	pH	Solids (%)
	6.96	4.06		5.22	5.07
1A	7.03	4.02	3B	5.20	4.82
	6.99	4.31		5.76	5.03
1B	7.55	5.80		6.95	3.50
	7.66	5.16	4A	7.05	3.67
	7.57	5.98		7.04	3.20
2A	2.43	3.13		6.70	3.48
	2.43	3.35	4B	6.75	3.99
	2.43	3.26		6.70	3.79
2B	2.33	5.66		5.33	6.13
	2.33	5.81	5A	5.03	5.60
	2.34	5.77		5.40	5.76
3A	4.89	5.91		4.70	1.93
	4.90	6.02	5B	4.74	2.08
	4.91	6.05		4.67	1.75

* Number = location on pond; A and B = 1st and 2nd sample at that location.

TABLE 9. EVALUATION OF POND SAMPLER: MEANS AND STANDARD DEVIATIONS OF TRIPLICATE ANALYSES FOR pH AND PERCENT SOLIDS IN WASTE SAMPLES TAKEN AT FIVE LOCATIONS ON POND 13, SITE A

	pH				Percent Solids			
	First sample		Second sample		First Sample		Second Sample	
Location	$\bar{x}$	s(n = 3)	$\bar{x}$	s(n = 3)	$\bar{x}$	s(n = 3)	$\bar{x}$	s(n = 3)
1	6.99	0.04	7.59	0.06	4.13	0.16	5.65	0.43
2	2.43	0.00	2.33	0.01	3.25	0.11	5.75	0.08
3	4.90	0.01	5.23	0.03	5.99	0.07	4.97	0.13
4	7.01	0.06	6.72	0.03	3.46	0.24	3.75	0.26
5	5.25	0.20	4.70	0.04	5.83	0.27	1.92	0.17
Average	5.32	0.06	5.31	0.03	4.53	0.17	4.41	0.21

TABLE 10. POND SAMPLER: MEANS AND STANDARD DEVIATIONS OF DATA THAT REFLECT DIFFERENCES BETWEEN TWO WASTE SAMPLES TAKEN AT EACH OF FIVE LOCATIONS ON POND 13, SITE A

	pH		Percent Solids	
Location	$\bar{x}$	s(n = 2)	$\bar{x}$	s(n = 2)
1	7.29	0.42	4.89	1.07
2	2.38	0.07	4.50	1.77
3	5.07	0.23	5.48	0.72
4	6.87	0.21	3.61	0.21
5	4.98	0.39	3.88	2.76
Average	5.32	0.26	4.47	1.31

determining pH or percent solids. If the standard deviations of the mean for each location (Table 7) are compared to the standard deviations for the analyses (Table 6), it appears that the laboratory analytical procedure for percent solids is largely responsible for the variation in the results. A hierarchical analysis of variance revealed that the differences between samples taken at the same location were significant at the 5% level ($F_{10,5}$ = 6.89). However, the analysis of variance performed on the percent solids data for Pond 0 indicates no significant differences between locations ($F_{5,4}$ = 0.95). If the mean value for each field sample (Table 6) is considered as a single result, the average percent solids for Pond 0 is 1.45 ± 0.27 (n = 8). Thus, the percent solids results for Pond 0 indicate that the pond sampler can reproduce samples with a relative standard deviation of ±19%, and that a large part of the variation in the results is due to the laboratory procedure for determining percent solids. It is difficult to obtain uniform weights among waste samples dried under similar conditions, and small weight differences contributed heavily to the variability among low-solids samples.

The data for the alkaline waste, Pond 13, are shown in Table 8. In this case, pH and percent solids measurements could both be used to evaluate the reproducibility of the sampling procedure. Triplicate aliquots of each sample (two samples from each of five locations on the pond) were analyzed. The pH measurements were very reproducible for aliquots from the same sample (Table 8) with a relative standard deviation of less than ±4%. The standard deviation for percent solids analyses (Table 9) was similar to that observed for Pond 0; however, the results are more consistent because of the higher concentration of solids (relative standard deviation of less than ±8%). When the standard deviations of the mean for each location (Table 10) are compared to the standard deviations for the analyses (Table 9), it is evident that the variation due to analytical procedures is not significant when compared to variations between two samples taken at the same location. When the mean value for each field sample (Table 9) is considered as a single result, the average percent solids for Pond 13 is 4.47 ± 1.38 (n = 10) and the average pH is 5.31 ± 1.85 (n = 10). The data in Table 10 and the standard deviations for the average of all Pond 13 samples (relative standard deviations of 31% and 34% for percent solids and pH, respectively) indicate significant differences between locations on the pond. The differences in pH are especially noteworthy since they indicate extreme heterogeneity within the pond and also show that there is little mixing of the aqueous phase of the waste. Data for percent non-filterable solids (Table 8) also indicate that for this measurement there were significant differences between samples taken at the same location. This might be expected with a liquid sample that has a significant solids concentration since the agitation created in taking the first sample could change the solids concentration observed in the second sample with little effect on the pH of the aqueous phase.

The results for the samples collected at site A indicate that even with a very heterogeneous waste the pond sampler has a reproducibility for pH and percent solids of better than ±35%. The data generally indicate that the reproducibility of the laboratory procedures for obtaining and analyzing aliquots from field samples is better than ±8%. However, for samples with low solids (i.e. < 2%) the reproducibility of the laboratory procedure was not as good. The standard deviation does not change; however, the <u>relative</u> standard deviation (standard deviation x 100 ÷ sample mean) changes considerably

because of the lower value for percent solids. As expected, the laboratory analytical procedure for pH was very reproducible (better than ±2%). Additionally, the data for percent solids indicate that there are differences between two consecutive samples taken at the same location on each pond. These differences, especially significant for Pond 13, indicate that for properties related to the solid/liquid phase composition, the composition of the second sample can be affected by the collection of the first sample at the same location. The largest overall source of variability appears to be between locations on the ponds. Surprisingly, the pH and percent solids data for Pond 13 showed similar differences between locations on the pond, even though they had different variabilities between samples taken at the same location. These results emphasize the fact that waste from sources such as disposal ponds may be very heterogeneous, and that a number of samples from different locations on the pond are required to properly represent a waste for identification (analysis) as hazardous or non-hazardous.

If the two samples collected at each location are treated as independent samples, two duplicate sets of data can be identified for each pond (i.e. set of first samples vs. set of second samples). The average value for each set of data then provides a mathematical composite of the samples for that set. Comparison of the average (mathematical composite, Table 11) for each set of samples demonstrates a high degree of overall reproducibility for the pond sampler. These results indicate that a composite of five samples from different locations on a pond should provide a more reproducible indication of the pond's composition.

In theory, if replicate composite samples collected from a pond are the same, then the individual composite samples could be considered to be representative of the whole.

To determine how well actual composite samples represent the waste in a pond, the field-composite sampling plan was used to collect 12 composite samples from each of two ponds, Pond O and Pond 12. Pond O was selected because discreet samples from that source had shown large sample-to-sample variability (Table 12). Pond 12 had not been previously sampled, but was quite similar to the adjacent Pond P (described previously) in appearance and function. In fact, it reportedly received periodic overflow from Pond P as one of its input sources.

Reproducibility

The results of the percent solids determinations (Table 13) for the 216 aliquots (9 aliquots from each of 12 one-gallon samples, from each of 2 ponds) indicate that sample-to-sample variability remains the greatest source of error in waste analysis. While the cumulative RSD for Pond 12 composite samples (20.3 %) is lower than we noted with previous discreet pond sample comparisons, composite samples from the highly heterogeneous Pond O still showed considerable variability (RSD = 53.3 percent). It should be noted that direct comparisons of sampling variability between Pond O discreet samples (based upon June 1979 sampling) and the composite samples (obtained from the same pond in November 1979) are misleading. The chemistries of the wastes

TABLE 11. REPRODUCIBILITY OF POND SAMPLER: MATHEMATICAL COMPOSITE OF FIRST AND SECOND SAMPLES FROM EACH LOCATION

Data	Pond 0 Sample 1 Composite	Pond 0 Sample 1 Composite	Pond 13 Sample 1 Composite	Pond 13 Sample 2 Composite
Mean pH	0.35	0.34	5.32	5.31
s of mean	0.007		0.007	
RSD of mean	2.02		0.13	
Mean % solids	1.42	1.48	4.53	4.41
s of mean	0.04		0.08	
RSD of mean	2.76		1.90	

Average RSD = 1.7

TABLE 12. AVERAGE RELATIVE STANDARD DEVIATIONS (RSD'S) FOR VARIOUS LEVELS OF SAMPLING

Sampling	RSD (%) pH Pond 0	pH Pond 13	pH Avg.	Non-filterable Solids (%) Pond 0	Non-filterable Solids (%) Pond 13	Non-filterable Solids (%) Avg.
Differences between aliquots of the same sample	10.1	0.9	5.5	17.6	4.7	11.2
Differences between duplicate samples taken at each location	26.5	4.8	15.4	13.6	30.3	22.0
Differences between locations on pond	21.5	36.5	29.0	19.9	16.9	18.4

TABLE 13. EVALUATION OF THE REPRODUCIBILITY OF COMPOSITE SAMPLES OBTAINED WITH A POND SAMPLER - NON-FILTERABLE SOLIDS (%)

Sample Number	Pond 12	Pond 0
1	9.8	2.0
2	9.0	2.7
3	7.4	2.0
4	7.3	3.7
5	11.6	0.7
6	10.3	2.6
7	10.2	2.8
8	6.7	4.3
9	5.7	0.5
10	8.3	3.3
11	7.3	1.0
12	9.5	1.5
Avg. Percent Solids -	8.59	2.26
Standard Deviation -	1.75	1.20
Relative Standard Deviation -	20.3%	53.3%

collected on the two dates (discussed in later sections) indicate that indeed the wastes were different on the two sampling dates. As the waste source is a disposal facility (rather than, for example, a process effluent sump), it is not surprising that the wastes cannot be directly compared after an interval of approximately 5 months. Also, the low average percent solids in the Pond 0 samples result in high RSD's with small actual differences between samples. In general, sampling precision (RSD's based on percent solids) is better with samples containing higher solids concentrations (>5%).

COLIWASA

Sample-to-sample reproducibility of the COLIWASA with two different liquid waste types is presented in Tables 14 and 15. The percent total solids values presented in Table 14 are averages of three aliquots from each sample. The reproducibility of the samples within drums (RSDs = 0.53%-5.43%) is of the same high order as that of the aliquots drawn from individual samples. The homogeneity of this API separator waste is evident from drum-to-drum comparisons (virtually no detectable differences).

A better test of the COLIWASA's ability to handle complex waste mixtures was provided by the oil/water biphasic waste (Table 15). Significant drum-to-drum differences were evident in the oil:water ratios determined for the waste samples, but the reproducibility of samples within drums was very good (range of RSDs = 8.3%-19.4%).

TABLE 14. EVALUATION OF COLIWASA SAMPLING METHOD WITH DRUMMED API SEPARATOR WASTE

Drum Number	Non-filterable Solids (%)	S (n = 3)	RSD (as %)
1	1.097	0.012	1.05
2	1.110	0.026	2.38
3	1.090	0.010	0.92
4	1.120	0.061	5.43
5	1.077	0.006	0.54
6	1.077	0.006	0.54
7	1.050	0.010	0.95
8	1.083	0.015	1.41
9	1.077	0.006	0.54
10	1.073	0.006	0.54
11	1.083	0.006	0.53
12	1.077	0.006	0.54
13	1.077	0.006	0.54
14	1.083	0.006	0.53
15	1.067	0.005	0.54

A caution is appropriate relative to sampling multiphasic materials with the COLIWASA. The bias introduced by the inability of the COLIWASA to sample clear to the bottom of a drum or tank becomes more significant the lower the level of waste -- particularly bottommost layers -- in the container. The disporportionality in resulting samples will be further exaggerated with repeated sampling. Care should be exercised to lower the COLIWASA no more rapidly than the liquid levels in the sampler and drum can equilibrate. This is especially important with viscous liquids. Otherwise, the potential exists for biasing the resulting samples with materials from the lower portions of the tank or drum.

Proposed Drum and Tank Sampler Design

To accommodate the need for a drum or tank sampler that can reach to within 1 cm of the bottom of the containing vessel, a sampler which is convenient to use (length adjustable for different sampling requirements) and economical (disposable collection tubes) was designed at EMSL/LV. The sampler is designated as the Williams/Beckert Drum and Tank (DAT) sampler. The DAT sampler consists of a support frame of stainless steel tubing. The support frame, as designed for drum sampling, is 4 feet long. Extension tubes 6 feet in length give the options of 4-, 6-, or 10-foot sampler lengths as needed.

TABLE 15. EVALUATION OF THE REPRODUCIBILITY OF BIPHASIC (OIL/WATER) LIQUID SAMPLES COLLECTED WITH A COLIWASA FROM WASTE DRUMS

	Height of Oil (mm)	Height of H_2O (mm)	Oil:Water Ratio
Drum #1			
Sample 1	15	122	0.12
Sample 2	17	129	0.13
Sample 3	14	124	0.11
Drum Avg.	15.3	125.0	0.12
Drum #2			
Sample 1	19	59	0.32
Sample 2	20	63	0.32
Sample 3	22	60	0.37
Drum Avg.	20.3	60.7	0.34
Drum #3			
Sample 1	54	122	0.44
Sample 2	45	137	0.33
Sample 3	43	135	0.32
Drum Avg.	47.3	131.3	0.36

	Mean Ratio	Std. Dev.	RSD (as %)
Drum 1	0.12	0.01	8.3
Drum 2	0.34	0.03	8.8
Drum 3	0.36	0.07	19.4
Avg.	0.273		

The frame receives and supports standard "3/4-inch Class 125" thin-wall PVC irrigation pipe -- readily available in 10' lengths at very low cost from garden supply stores -- which serves as the disposable collection tube. Collection tubes of other materials (e.g., glass or stainless steel tubing) can be substituted for PVC when there is reason to suspect the liquid waste contains solvents which attack PVC. Ten-foot lengths of the PVC pipe are easily cut with knife or hacksaw to the lengths desired (generally 4-, 6- and uncut 10-foot lengths). The DAT sampler and its use are described in more detail in Appendix 3.

EXTRACTION PROCEDURE EVALUATION

Reproducibility

The extraction procedure (EP) was evaluated to determine its reproducibility when used for the identification of hazardous waste. The EP extracts were first screened for several elements including arsenic, barium, cadmium, chromium, and lead by inductively coupled plasma emission spectroscopy (ICP). The screening analyses were for qualitative identification and were restricted to those toxic elements (listed in the regulation) that can be analyzed by the ICP system at the EMSL-LV. The extracts were then analyzed for each element of interest by atomic absorption (AA) spectroscopy in accordance with the proposed regulations.

Table 16 presents the ICP data collected in the initial phase of this study. These data indicate very high concentrations of the toxic elements of interest in several of the EP extracts from samples taken at Site A. Samples from Pond O, Site A had to be diluted since the concentrations of As, Cr, and Pb exceeded the linear range of the analytical method. The EP extracts of samples from Pond 10, Site A, the pesticide waste from Site C, and the filter cake from Site G had low or insignificant concentrations of the metals that could be identified by the screening analysis.

Table 17 gives the atomic absorption (AA) data obtained in the initial phase of this study. The results confirm the ICP findings and provide quantitative values for the concentrations of barium, chromium and lead in the EP extracts. These three elements were selected for AA analysis in the initial phase because of their relatively high concentrations observed in the ICP screening analyses.

The samples from Pond O and Pond P (Site A) also contained relatively high concentrations of barium, chromium and/or lead. Triplicate aliquots from each of two samples from each pond were analyzed using the EP for two reasons: (1) to obtain additional data on the reproducibility of the EP; and (2) to point out differences between two pond wastes that, according to the site operator, came from the same source. The standard deviations presented in Table 18a reflect the reproducibility of the analytical procedures performed on wastes from Ponds O and P.

Data in Tables 18a and b indicate the level of extraction reproducibility observed with the two wastes. High reproducibility was obtained with

TABLE 16. ICP SCREENING ANALYSIS OF EP EXTRACTS: APPROXIMATE ELEMENTAL COMPOSITION OF EXTRACTS FROM SELECTED WASTE SAMPLES

Sample (No. of Extracts Analyzed)	Approximate Concentration* (mg/l)				
	As	Ba	Cd	Cr	Pb
	λ = 1937.7	4554.0	2265.0	2835.6	2203.5
Site A, Pond 13, Location 1 (1)	1.3	0.2	0.5	1.8	0.5
Site A, Pond O, Location 2 (15)	168	10.8	4.2	1400	168
Site A, Pond P, Location 2 (7)	0.6	24.2	<0.2	124	1.2
Site A, Pond 10, Sulfonation Tars (2)	<0.4	0.08	<0.02	<0.02	<0.25
Site B, Paint Sludge, Sampled 4-19-79 (3)	0.8	1.13	0.06	7.1	1.2
(3)**	<0.4	0.57	0.05	0.09	<0.25
Site B, Paint Sludge, Sampled 6-13-79 (1)	0.6	18	0.02	4.1	0.25
Site C, Pesticide Waste (2)	<0.4	0.26	<0.02	<0.02	<0.25
Site D, Chromate Oxidation Paste	0.8	0.6	0.6	4.5	0.4
Site D, API Oil-Water Separator (3)	<0.4	<0.002	<0.02	3.6	<0.25
Site E, Electric Furnace Baghouse Dust (1)	1.6	0.8	<0.5	3.5	0.5
Site E, Blast Furnace Scrubber Filter Cake (1)	0.6	1.3	<0.02	0.4	7
Site E, Lime Sludge from Ammonia Still (1)	1.6	<0.002	<0.02	2.3	0.4
Site E, Mill Scale from Water Treatment Plant (1)	<0.4	<0.002	<0.02	3.1	<0.25
Site G, Filter Cake, Cl/Hg Process Stream (1)	<0.4	<0.002	<0.02	<0.02	<0.25
Site I, Chlorine Process Sludge (1)	1.8	0.07	--	0.3	0.9

* Chemical, physical and spectral interferences were not minimized. Results are corrected for dilution. Data for Ponds O and P, Site A represent averages from analyses of extracts from replicate samples; in some cases, extracts had to be diluted to bring values within the linear range of the instrument. Emission wavelength (λ, in nanometers) is indicated for each element.

** By ASTM procedure with distilled water.

TABLE 17. EVALUATION OF EXTRACTION PROCEDURE (EP): MEANS AND STANDARD DEVIATIONS FOR AA ANALYSES* OF EP EXTRACTS FOR BARIUM, CHROMIUM AND LEAD

Waste Extracted	Barium (mg/l)		Chromium (mg/l)		Lead (mg/l)	
	$\bar{x}$	s	$\bar{x}$	s	$\bar{x}$	s
Sulfonation Tars (Site A, Pond 10)	<0.9	--	<0.02	--	0.3	0.1
	<0.9	--	<0.02	--	0.3	0.1
Paint Sludge, Site B (Collected 4-19-79)	9.8	1.5	4.1	0.1	0.1	0.1
Paint Sludge, Site B (Collected 6-13-79)	5.15	0.32	1.02	0.13	0.08	0.1
	21.1	2.7	1.90	0.17	<0.08	--
Pesticide Waste, Site C	0.9	0.1	<0.02	--	<0.08	--
API Oil Separator Inlet, Site D	<0.9	--	9.1	0.1	0.1	0.1
	<0.9	--	1.2	0.0	0.1	0.1
	<0.9	--	1.0	0.0	0.1	0.2
Chromate Oxidation Paste, Site D	<0.9	--	7.9	0.2	<0.8	--
	<0.9	--	1.4	0.1	<0.8	--
Electric Furnace Baghouse Dust, Site E	0.80	0.06	<0.32	--	0.13	0.04
	1.04	0.11	<0.32	--	0.13	0.03
	0.85	0.19	<0.32	--	0.13	0.04
Blast Furnace Scrubber Filter Cake, Site E	1.06	0.08	<0.32	--	15.3	0.7
	0.64	0.14	<0.32	--	14.4	0.7
	0.90	0.03	<0.32	--	11.6	0.7

(continued)

* Flame Atomic Absorption analyses performed in triplicate.

TABLE 17. (Continued)

Waste Extracted	Barium (mg/l) $\bar{x}$	Barium (mg/l) s	Chromium (mg/l) $\bar{x}$	Chromium (mg/l) s	Lead (mg/l) $\bar{x}$	Lead (mg/l) s
Mill Scale, Water Treatment Plant, Site E	0.20	0.03	<0.32	--	<0.08	--
	0.19	0.03	<0.32	--	<0.08	--
	0.52	0.04	<0.32	--	<0.08	--
	(1) 0.28	0.01	<0.32	--	<0.08	--
	(1) 0.24	0.02	<0.32	--	<0.08	--
	(1) 0.22	0.03	<0.32	--	<0.08	--
Lime Sludge, Ammonia Still, Site E	(2) 2.7	1.6	<0.02	--	0.3	0.1
Filter Cake, Chlorine/Hg Process Stream, Site G	0.25	0.03	<0.32	--	0.10	0.06
	0.14	0.05	<0.32	--	<0.08	--
	0.15	0.07	<0.32	--	<0.08	--
	(2) 0.9	--	<0.02	--	<0.08	--
Chlorine Process Sludge, Site I	0.48	0.16	<0.32	--	0.45	0.04
	0.40	0.46	<0.32	--	0.45	0.04
	0.98	0.49	<0.32	--	0.48	0.04
	(2) 3.5	1.0	0.1	0.0	0.4	0.1

(1) Results obtained with wrist-arm shaker.
(2) Preliminary and test data.

replicate extractions of the same waste samples when chromium and lead were used as indicators. The reproducibility of replicate chromium and lead analyses on a given EP extract was also found to be high. While the reproducibility of the barium analyses was not as precise as for lead and chromium, the data suggest that extraction reproducibility for Ba is reasonable with the wastes tested. Problems with barium contamination resulting from the filtration apparatus (pre-filter) and problems in barium analysis are discussed later.

The EP was not evaluated with waste samples containing appreciable fractions of oil or organic solvents. The applicability of the EP to these kinds of samples should be evaluated, as a large number of waste types can be expected to contain such materials.

TABLE 18a. EVALUATION OF EXTRACTION PROCEDURE (EP): AVERAGE MEANS (n=3) AND STANDARD DEVIATIONS FOR AA ANALYSES* OF EP EXTRACTS OF WASTES FROM PONDS O AND P, SITE A

Sample Extracted		Barium (mg/l)			Chromium (mg/l)			Lead (mg/l)		
		$\bar{x}(1)$	s	RSD (%)	$\bar{x}(1)$	s	RSD (%)	$\bar{x}(1)$	s	RSD (%)
Pond O	2A	1.65	0.17	10.3	1040	17	1.6	45.7	0.5	1.1
	2B	1.34	0.05	3.7	943	21	2.2	43.5	2.0	4.6
Pond P	2A	29.9	4.9	16.4	77.6	2.4	3.1	--	--	--
	2B	27.8	3.7	13.3	82.5	2.0	2.4	--	--	--

* Flame Atomic Absorption analyses performed in triplicate on each of three aliquots of sample extracts.

RSD = Relative Standard Deviation

Table 18b. RELATIVE STANDARD DEVIATIONS (RSD) OF EXTRACTIONS AND ANALYSES FOR SELECTED METALS

Analysis (Sample source: Ponds O and P, Site A)	RSD (%)		
	Barium	Chromium	Lead
Differences between replicate determinations on a given EP extract	14.9	1.3	2.0
Differences between replicate extractions on a given sample of waste	11.0	1.8	3.0

Comparison of Three Extractor Types

Data from preliminary studies (Table 11) had suggested good agreement between a wrist-arm type shaker and the blade-type extractor described in the proposed regulation. A study was then undertaken to compare the blade-type extractor with the NBS tumbling-action extractor and the wrist-arm shaker for three waste types (Ponds 0 and 12 and biosolids).

Three metals were analyzed for this comparison study. The average concentrations and standard deviations for each metal by extraction technique are shown in Table 19. The blade-type extractor tended to yield lower extract concentrations of the metals extracted than the other two types, especially from samples with low solids (Pond 0). Of the three extractor types, the blade-type agitates the samples the least and appears most sensitive to sample size.

In Table 20, the relative percent contribution to total variance is shown by sample, technique, aliquot, and analysis. The ranking from highest to lowest, using the average relative variance, is sample, 63 percent; aliquot, 20 percent; extraction technique, 10 percent; and analysis, 7 percent.

The data in Table 21 are the statistical parameters used to evaluate the equivalency of the three techniques. These were used in Table 22 to indicate the significance of differences between samples, techniques, or aliquots. The Student-Newman-Keuls multiple comparison test (Table 23) was used to show whether one extraction technique was "better" than another. Only in two cases did the statistics support one technique over the others. This was for chromium in the biosolids samples and barium in Pond 0 samples.

The overall performance of the three extractors is perhaps best summarized by comparing the average RSD for each extractor (average overall RSD including the variability components associated with sampling, aliquoting and analysis).

Extractor	Overall RSD (as percent)		
	Pond 0	Pond 12	Biosolids
Blade-type (rotary)	10.8	226.4	12.8
NBS tumbling-type	10.0	129.7	10.8
Wrist-arm shaker	12.3	143.9	10.5

The variability associated with sampling, aliquoting, extracting, and analyzing the Pond 0 samples for chromium and lead was determined in this study. Those components contributing to the overall variability associated with the chromium determination were:

Analyses	0.3%	Extraction Techniques	0.1%
Aliquots	5.6%	Sampling	94.1%

TABLE 19. EXTRACTOR COMPARISON - MEAN AND STANDARD DEVIATION OF CONCENTRATIONS OF METALS EXTRACTED WITH THREE EXTRACTOR TYPES

	Ba			Cr			Pb		
	W	N	R	W	N	R	W	N	R
Pond 0	$\bar{x}$=6.21	$\bar{x}$=5.40	$\bar{x}$=3.72	$\bar{x}$=917	$\bar{x}$=948	$\bar{x}$=907	$\bar{x}$=36.70	$\bar{x}$=36.95	$\bar{x}$=36.50
	s=1.25	s=0.72	s=0.84	s=113	s=94.6	s=94.6	s=3.96	s=4.37	s=4.56
Pond 12	NO ANALYSES PERFORMED			$\bar{x}$=0.66	$\bar{x}$=0.37	$\bar{x}$=0.53	$\bar{x}$=0.58	$\bar{x}$=0.48	$\bar{x}$=0.67
				s=0.95	s=0.48	s=1.20	s=0.51	s=0.34	s=0.84
Biosolids	$\bar{x}$=1.56	$\bar{x}$=1.38	$\bar{x}$=1.22	$\bar{x}$=0.31	$\bar{x}$=0.23	$\bar{x}$=0.17	$\bar{x}$=0.38	$\bar{x}$=0.37	$\bar{x}$=0.39
	s=0.48	s=0.41	s=0.50	s=0.13	s=0.06	s=0.06	s=0.04	s=0.04	s=0.05

W = Wrist-Arm Shaker
N = NBS Tumbling-Type Extractor
R = Blade-Type Extractor

TABLE 20. EXTRACTOR COMPARISON - VARIABILITY ATTRIBUTABLE TO SAMPLING AND ANALYTICAL PROCEDURES

		Relative Sources of Variation (Percent)				
Waste Type	Metal	$\sigma^2_{Samples}$ +	$\sigma^2_{Techniques}$ +	$\sigma^2_{Aliquots}$ +	$\sigma^2_{Analyses}$ =	σ^2_{Total}
Pond 0	Ba	0	61.9	18.2	19.9	100.0
Pond 0	Cr	94.0	0.1	5.6	0.3	100.0
Pond 0	Pb	94.6	0.0	4.3	1.1	100.0
Pond 12	Ba	NO ANALYSES PERFORMED				
Pond 12	Cr	50.2	0	47.2	2.6	100.0
Pond 12	Pb	59.5	13.0	27.2	0.3	100.0
Biosolids	Ba	0	49.4	0	50.6	100.0
Biosolids	Cr	10.6	45.2	43.6	0.6	100.0
Biosolids	Pb	60.0	0	0	40.0	100.0

TABLE 21. EXTRACTOR COMPARISON - "F VALUES" CALCULATED FROM ANALYSES OF VARIANCE

		ANOVA Statistical Significance Criteria Levels (A=0.05)					
		Samples		Techniques		Aliquots	
Waste Type	Metal	$F_{(calc)}$	$F_{\nu 1,\nu 2,\alpha}$	$F_{(calc)}$	$F_{\nu 1,\nu 2,\alpha}$	$F_{(calc)}$	$F_{\nu 1,\nu 2,\alpha}$
Pond 0	Ba	0.27	4.07	9.33	2.36	2.77	1.86
Pond 0	Cr	37.05	4.07	1.58	2.36	11.46	1.83
Pond 0	Pb	206	4.07	1.40	2.36	2.27	1.83
Pond 12	Ba	NO ANALYSES PERFORMED					
Pond 12	Cr	10.30	2.21	0.90	1.68	37.11	1.43
Pond 12	Pb	8.87	2.26	2.42	1.69	186	1.45
Biosolids	Ba	0.55	2.21	1.98	1.68	0.65	1.43
Biosolids	Cr	1.54	2.21	4.08	1.68	158	1.43
Biosolids	Pb	2.36	2.21	1.55	1.68	0.45	1.43

TABLE 22. EXTRACTOR COMPARISON - DIFFERENCES BETWEEN TECHNIQUES, BY WASTE TYPE

Waste Type	Metal	Average Concentration (mg/liter)	Total Number AA Analyses	Significant Difference (α=0.05) Between			Relative Standard Deviation Between Techniques (%)
				Samples	Techniques	Aliquots	
Pond 0	Ba	5.14	69	No	Yes	Yes	22.1
Pond 0	Cr	924	72	Yes	No	Yes	0.7
Pond 0	Pb	36.7	72	Yes	No	Yes	<0.1
Pond 12	Ba			NO ANALYSES PERFORMED			
Pond 12	Cr	0.514	216	Yes	No	Yes	<0.1
Pond 12	Pb	0.562	209	Yes	Yes	Yes	38.2
Biosolids	Ba	1.39	215	No	Yes	No	32.1
Biosolids	Cr	0.234	216	No	Yes	Yes	31.7
Biosolids	Pb	0.380	215	Yes	No	No	<0.1

TABLE 23. EXTRACTOR COMPARISON - RESULTS OF MULTIPLE COMPARISON TEST TO RANK EXTRACTION TECHNIQUES

Waste Type	Metal	Order of Techniques Sample Means*	Results of Student-Newman-Keuls Test: Order of Technique Population Means	Significant Difference Between Techniques (α = 0.05)
Pond 0	Ba	$x_R = 3.72 < x_N = 5.40 < x_W = 6.21$	$\mu_R < \mu_N = \mu_W$	Yes
Pond 0	Cr	$x_R = 907 < x_W = 917 < x_N = 948$	$\mu_R = \mu_W = \mu_N$	No
Pond 0	Pb	$x_R = 36.50 < x_W = 36.70 < x_N = 36.95$	$\mu_R = \mu_W = \mu_N$	No
Pond 12	Ba	NO ANALYSES PERFORMED		
Pond 12	Cr	$x_N = 0.37 < x_R = 0.53 < x_W = 0.66$	$\mu_N = \mu_R = \mu_W$	No
Pond 12	Pb	$x_N = 0.48 < x_W = 0.58 < x_R = 0.67$	$\mu_N = \mu_W = \mu_R$	No
Biosolids	Ba	$x_R = 1.22 < x_N = 1.38 < x_W = 1.56$	$\mu_R = \mu_N = \mu_W$	No
Biosolids	Cr	$x_R = 0.17 < x_N = 0.23 < x_W = 0.31$	$\mu_R = \mu_N < \mu_W$	Yes
Biosolids	Pb	$x_N = 0.37 < x_W = 0.38 < x_R = 0.39$	$\mu_N = \mu_W = \mu_R$	No

* Subscripts: R refers to blade-type extractor; N refers to NBS tumbling-type extractor; W refers to wrist-arm shaker.

As determined from the analysis of lead data the variability components were:

Analyses	1.1%	Extraction Techniques	0.0%
Aliquots	4.3%	Sampling	94.6%

The above data clearly identify sample-to-sample variability as the greatest component of variability found in analyses of the Pond O waste samples. Unless sampling personnel have good evidence that a particular waste or waste stream is physically and chemically homogeneous, it is a recommended practice to pre-sample the waste. With preliminary sampling, an estimate of the true sample population mean and variance can be determined. The number of samples needed to determine the confidence level for estimates of sample population precision can then be calculated (Cochran, 1963). Even when a waste is so heterogeneous that it is impractical to obtain enough samples to achieve high confidence in the precision estimate, some level of confidence can still be determined.

Sewage Sludge Extraction and Analysis

During a sewage sludge study, performed in conjunction with the Municipal Environmental Research Labortory (MERL/Cin), we found significant levels of chromium in reagent blanks run through blade-type extractors 1 and 4. The dissolved metals analyses on the acetic acid blanks are given in Table 24. These levels did not impact the classification of the sludge samples tested, as none exceeded the criterion level for chromium.

The levels of metals found in the EP extract of the sludges tested are shown in Table 25. Although the precision was not high (RSD, 33% - 43%) for chromium levels approaching the lower detection limit, results of chromium determinations for triplicate sample aliquots extracted in various extractors were found to be comparable. The highest levels of cadmium were found in extracts of sludge #2 (0.601 mg/l), sludge #6 (0.116 mg/l), and sludge #7 (0.275 mg/l). These levels would not have resulted in the classification of these wastes as hazardous. Levels of total metals in the digested sludges are listed in Table 26.

Although some values agreed between the two performing laboratories, EMSL/LV and MERL/Cin, a sufficient number of values were different enough to raise concern. When the measurement units were adjusted to allow direct comparison, extracted metal concentrations found by MERL/Cin ranged, with few exceptions, from about 25 percent to 70 percent of the values recorded by EMSL/LV. The differences appeared to be systematic and suggested that procedural differences might exist. Discussions did reveal differences in the procedures followed (e.g., different extractors; use of nitric acid vs. perchloric acid/nitric acid as digestion medium; and metal values based upon dried sludge weight vs. sample volume) which may have influenced the comparative results.

It is evident from the interlaboratory exercise that procedures to be followed must be precisely spelled out, step-by-step, so that the

TABLE 24. LEVELS OF DISSOLVED METALS (mg/l) IN ACIDIFIED BLANK SAMPLES - AVERAGE OF TRIPLICATE DETERMINATIONS

Source of Sample	As	Ba	Cd	Cr	Pb	Se
Filtration Apparatus	<0.02	<0.45	<0.02	<0.04	<0.07	<0.02
Extractor No. 1	<0.02	<0.45	<0.02	0.120 ± .050	<0.07	<0.02
Extractor No. 2	<0.02	<0.45	<0.02	<0.04	<0.07	<0.02
Extractor No. 3	<0.02	<0.45	<0.02	<0.04	<0.07	<0.02
Extractor No. 4	<0.02	<0.45	<0.02	0.048 ± .008	<0.07	<0.02

possibilities of misinterpretations or substitution of non-equivalent alternate procedural elements are completely eliminated.

Triplicate extracts of sludge #2 were provided to MERL/Cin as a further check on the analytical reproducibility between the laboratories. The agreement between average cadmium values -- the greatest concentration differences recorded in the initial intercomparison were with cadmium -- was excellent:

	EMSL/LV	MERL/Cin
Extract A	0.28 μg/l Cd	0.28 μg/l Cd
Extract B	1.07 μg/l Cd	1.05 μg/l Cd
Extract C	0.45 μg/l Cd	0.44 μg/l Cd

Extractability of Mercury

Only two extracts have been analyzed for mercury (Table 27). Although these samples were expected to contain high mercury concentrations, analysis of the EP extracts yielded values of less than 4 μg/l. When aliquots of the waste samples were digested with aqua regia and the digested samples analyzed for mercury, the results (Table 27) confirmed that the waste samples did indeed contain high concentrations of mercury (approximately 1-2 mg Hg per gram of waste). However, the EP extracted only a very small fraction of the mercury present. The mercury may be in the form of organo-mercury compounds, it may be tightly bound to the solids in the matrix or it may be present in a highly insoluable form, e.g., as HgS. If so, the results simply suggest that

TABLE 25. LEVELS OF DISSOLVED METALS FOUND IN EP EXTRACTS OF SELECTED WASTE SAMPLES - AVERAGE OF TRIPLICATE EXTRACTIONS

Sample Designation	As		Ba		Cd		Cr		Pb		Se	
	mg/l	S.D.	mg/l	S.D.	mg/l	S.D.	mg/l	S.D.	mg/l	S.D.	mg/l	S.D.
Tulsa, OK combined sludge	<0.02	--	<0.45	--	<0.02	--	<0.04	--	<0.07	--	<0.02	--
Fountain Valley, CA sludge	0.034	0.013	<0.45	--	0.601	0.414	0.07	0.03	<0.07	--	0.02	0.01
Cincinnati, OH sewage sludge	0.031	0.00	0.53	0.18	0.018*	0.002	0.05	0.02	0.08	0.03	0.02	0.01
Dallas, TX primary sludge	<0.02	--	0.50	0.16	0.007*	0.003	0.06	0.02	<0.07	--	0.03	0.02
Chicago, IL digested sludge	0.031	0.006	<0.45	--	<0.02	--	<0.04	--	<0.07	--	<0.02	--
Chicago, IL fertilizer	0.030	0.012	<0.45	--	0.116	0.019	0.123	0.010	<0.07	--	<0.02	--
Chicago, IL landfill sludge	<0.02	--	<0.45	--	0.275	0.093	<0.04	--	<0.07	--	0.037	0.001

* Single outlier value not included in mean
S.D. = Standard deviation

TABLE 26. LEVELS OF DISSOLVED METALS (TOTAL) FOUND IN DIGESTS OF SELECTED WASTE SAMPLES - AVERAGE OF TRIPLICATE DIGESTS

Sample Designation	As		Ba		Cd		Cr		Pb		Se	
	mg/l	S.D.	mg/l	S.D.	mg/l	S.D.	mg/l	S.D.	mg/l	S.D.	mg/l	S.D.
Tulsa, OK combined sludge	0.055	0.002	1.27	0.02	0.317	0.004	0.86	0.04	0.756	0.053	0.040	0.002
Fountain Valley, CA sludge	0.692	0.040	0.722	0.210	2.71	0.12	12.2	1.01	8.97	0.17	0.312	0.034
Cincinnati, OH sewage sludge	2.72	0.52	4.32	0.64	0.814	0.041	20.7	2.0	31.6	2.2	1.21	0.16
Dallas, TX primary sludge	<0.02	--	0.48	0.16	0.034	0.006	0.35	0.02	0.260	0.008	0.018	0.002
Chicago, IL digested sludge	0.097	0.001	1.09	0.07	0.310	0.007	3.89	0.44	1.13	0.06	0.10	0.01
Chicago, IL fertilizer	0.466	0.044	3.55	0.77	2.87	0.53	23.5	4.9	3.27	0.51	0.30	0.07
Chicago, IL landfill sludge	1.08	0.14	2.46	0.14	7.41	0.76	43.0	8.2	17.8	5.6	0.97	0.08

S.D. = Standard deviation

TABLE 27. EVALUATION OF EXTRACTION PROCEDURE (EP): COMPARISON OF MERCURY CONCENTRATIONS (COLD VAPOR AA) IN WASTE SAMPLE DIGESTS WITH THOSE ESTIMATED FROM EP EXTRACTS

Waste Sample	EP Extract (μg/l)		Reconstructed* Sample (μg/g)		Digested Sample (μg/g)	
	$\bar{x}$	s	$\bar{x}$	s	$\bar{x}$	s
Filter Cake, Site G	<0.2	--	<0.0004	--	1970	110
Chlorine Process Sludge, Site I	3.7	0.2	0.074	0.004	840	130

* Calculated from extract concentration and dry weight of solids in the waste sample extracted.

the mercury would not leach out from the waste under acidic (pH = 5.0) conditions. For most elements the fact that only a small fraction of the total amount present in the waste can be leached out using the EP is of minor concern. The reason is that non-leachable materials are not considered to pose a significant toxicity hazard in a properly managed waste. However, in the case of mercury the situation is difficult. Mercury compounds are known to undergo -- in soils and in aquatic environments --changes that affect the solubility of the mercury species (e.g., $HgS \rightarrow HgSO_4$; $Hg^{2+} \rightarrow Hg^0$; $Hg^{2+} \rightarrow RHg^+ \rightarrow R_2Hg$). Therefore, any waste that contains high levels of mercury or mercury compounds -- even though the EP extractable part is small -- should be regarded as a potential time bomb. This indicates that the extraction procedure or analytical method may be inadequate for identifying mercury hazards. More work is required to identify the form of mercury present in these samples and to clarify the questions concerning the use of the Extraction Procedure for identification of leachable mercury in waste samples.

Extract Stability

A problem has been experienced with the stability of some EP extracts. Some of the extracts, especially those with high concentrations of inorganic and organic materials, formed precipitates over a period of several days. This problem was observed early in the study and was addressed by adding a step to the procedure. In this step the EP extract is split into two samples as it is prepared. One sample is stored in a refrigerator at 4°C until it can be analyzed for organics; the other sample is acidified to pH < 2 with nitric acid to preserve the sample for elemental analysis. However, even with this step, some of the more concentrated samples produced a precipitate within a few days after preservation. This problem will be investigated in more detail in future studies.

Background Interferences

Given the low but varying levels of contamination found in the blanks (Tables 28-30), a question arose as to whether the contamination was caused by the metallic components of the apparatus, or by improper cleaning between runs. To answer this question, the levels of chromium in the blanks were compared to the levels in the extracts generated in the corresponding blade-type extractor immediately prior to the blank. Figure 4 is a graphical presentation of this data. The data do not represent a special study to answer this question, but they do suggest that contamination of the equipment is occurring, and that this is resulting in contamination of the succeeding extracts. The lack of any correlation between chromium concentration in the distilled water blank and that in the sample preceeding the blank further suggests that using distilled water blanks to determine equipment cleanliness is not adequate. The chromium level in the acidic blanks (0.1N acetic acid) generally parallels the levels of chromium in the preceding sample.

To further explore this relationship, a number of sequential acidic blanks were run and data derived from analyzing splits of these "extracts" were evaluated. These blank extracts were divided into two portions, one of which was filtered, before analysis. Figure 5 compares the concentration of barium in the filtered and unfiltered portions. While the barium concentrations in the unfiltered portions remain below the instrumental detection limits, the filtered portions consistently contain readily detectable amounts. This finding, and a direct comparison of barium levels from extracted (Table 28) and filtered/extracted acidified blanks (Table 30), suggested to us that some component of the filtration apparatus was contributing barium to the blanks. It is interesting to note that the data in Figure 5 correspond to the period in which a transition was made from routine use of distilled water blanks (or very slightly acidified blanks) to use of blanks containing the maximum level of acetic acid (0.1N) employed in the Extraction Procedure. To further define the source of the Ba contribution, the Nuclepore® prefilter and polycarbonate filter pads were soaked for 50 minutes in 50-ml volumes of dilute nitric acid (pH 2.5) and acetic acid (0.1N). These extracts were then analyzed for Ba. Only the glass fiber prefilter pad soaked in dilute nitric acid leached measurable amounts of Ba. The levels of Ba (approximately 1 mg/l) leached from the prefilter by the nitric acid reagent are comparable (considering the dilution factor) to those observed (Table 30) from acidified blanks filtered using the filtration apparatus. The prefilter used in this test was a Nuclepore® P40 Prefilter (stock number 211703).

Experiments were then conducted in order to determine whether the barium could be readily removed by soaking the filter pads in dilute nitric acid. Three Nuclepore® P40 prefilters were soaked for 40 minutes in 50-ml volumes of 2N nitric acid. The solutions were then decanted, analyzed, and found to contain 4.1 mg/l of Ba (S=0.71). After rinsing three times with distilled water, they were again soaked in 50 ml volumes of acid, this time for 60 minutes. These solutions average 1.1 mg/l of Ba (S=0.09). Again the filters were rinsed three times with distilled water, and extracted with 50 ml of acid, this time for 75 minutes. The barium concentration in this final extract was 0.60 mg/l (S=0.12). The leachable barium is not fully removed from the prefilters. A single 100-minute soak in 2N nitric acid was performed

TABLE 28. EVALUATION OF BACKGROUND CONCENTRATIONS OF ELEMENTS FROM EP EXTRACTORS. MEANS AND STANDARD DEVIATIONS OF TRIPLICATE ATOMIC ABSORPTION ANALYSES OF ACIDIFIED BLANK SAMPLES

		Ba (mg/l)		Cr (mg/l)		Pb (mg/l)	
Extractor #	Matrix	$\bar{x}$	s	$\bar{x}$	s	$\bar{x}$	s
1	(*)	<0.1	-	<0.31	-	<0.12	-
2	(*)	<0.1	-	<0.31	-	<0.12	-
3	(*)	<0.1	-	<0.31	-	<0.12	-
4	(*)	<0.1	-	<0.31	-	<0.12	-
4	(*) Rerun	<0.1	-	<0.31	-	<0.12	-
5	(*)	<0.1	-	<0.31	-	<0.12	-
7	(*)	<0.1	-	<0.31	-	<0.12	-
1	(**)	<0.1	-	0.20	0.03	<0.2	-
1	(**)	<0.03	-	0.22	0.00	<0.09	-
2	(**)	<0.1	-	0.26	0.02	<0.2	-
2	(**)	<0.03	-	<0.04	-	<0.09	-
3	(**)	<0.1	-	<0.04	-	0.07	0.03
3	(**)	0.1	0.0	0.06	0.01	<0.09	-
4	(**)	<0.1	-	0.12	0.01	0.04	0.02
4	(**)	<0.03	-	0.06	0.01	<0.09	-
5	(**)	<0.1	-	<0.04	-	0.02	0.01
5	(**)	<0.03	-	0.04	0.00	<0.09	-
6	(**)	<0.1	-	<0.04	-	<0.02	-
7	(**)	<0.1	-	<0.04	-	0.02	0.01
7	(**)	<0.1	-	0.28	0.01	<0.02	-
7	(**)	<0.03	-	<0.04	-	<0.09	-

* Deionized water adjusted to pH 5.0 ± 0.2 with 1.0 M acetic acid. (Total volume of extract = 2000 ml.)

** Deionized water to which 400 ml acetic acid was added (maximum amount allowable in the EP). (Total volume of extract = 2000 ml).

TABLE 29. EVALUATION OF BACKGROUND CONCENTRATIONS OF ELEMENTS FROM FILTRATION APPARATUS: MEAN AND STANDARD DEVIATIONS OF TRIPLICATE ATOMIC ABSORPTION ANALYSES OF DEIONIZED WATER BLANK SAMPLES

Filtration Apparatus #	Ba (mg/l)		Cr (mg/l)			Pb (mg/l)	
	$\bar{x}$	s	$\bar{x}$	s	Rerun $\bar{x}$*	$\bar{x}$	s
2	<0.9	-	<0.02	-	-	<0.08	-
1	<0.9	-	<0.02	-	-	<0.08	-
3	0.10	0.02	<0.32	-	0.05	<0.08	-
3	0.12	0.03	<0.32	-	0.06	<0.08	-
2	<0.06	-	<0.32	-	0.11	<0.08	-
2	<0.06	-	<0.32	-	0.04	<0.08	-
3	0.11	0.02	<0.32	-	0.29	<0.08	-
3	0.16	0.03	<0.32	-	0.02	<0.08	-
2	0.11	0.03	<0.32	-	0.04	<0.08	-
2	0.09	0.01	<0.32	-	0.03	<0.08	-
2	<0.06	-	<0.32	-	<0.02	<0.08	-
2	<0.06	-	<0.32	-	<0.02	<0.08	-
2	<0.1	-	0.15	0.01	0.16	<0.2	-
2	<0.1	-	0.42	0.01	0.42	<0.2	-
2	0.1	0.1	0.20	0.01	0.17	<0.2	-
2	<0.1	-	<0.31	-	0.12	<0.12	-
2	<0.1	-	<0.31	-	<0.02	<0.12	-
2	<0.1	-	<0.31	-	<0.02	<0.12	-
2	<0.1	-	<0.31	-	0.09	<0.12	-
3	<0.1	-	0.38	0.02	0.34	<0.02	-
3	<0.1	-	<0.04	-	-	<0.02	-
3	<0.1	-	<0.04	-	-	<0.02	-
2	<0.1	-	<0.04	-	-	<0.02	-
2	<0.1	-	<0.04	-	-	<0.02	-
2	<0.1	-	<0.04	-	-	<0.02	-
2	<0.1	-	<0.04	-	-	<0.02	-

(continued)

TABLE 29. (Continued)

Filtration Apparatus #	Ba (mg/l)		Cr (mg/l)			Pb (mg/l)	
	$\bar{x}$	s	$\bar{x}$	s	Rerun $\bar{x}$*	$\bar{x}$	s
3	<0.1	-	<0.04	-	-	<0.02	-
3	<0.1	-	0.04	-	-	<0.02	-
3	<0.03	-	<0.04	-	-	<0.09	-
3	<0.03	-	<0.04	-	-	<0.09	-
3	0.03	0.01	<0.04	-	-	<0.09	-
3	0.06	0.01	<0.04	-	-	<0.09	-
3	0.03	0.02	<0.04	-	-	0.20	0.05
3	0.06	0.00	<0.04	-	-	<0.09	-
3	0.07	0.00	<0.04	-	-	<0.09	-
3	0.12	0.00	<0.04	-	-	<0.09	-

* Blanks rerun on AA at lower (0.02) detection limit for Cr.

on each of two Millipore® Type AP 15124 prefilters as a comparison to see if this contamination is to be expected using other brands of prefilters. The resulting Ba concentration in the nitric acid solution was 1.8 mg/l (S=0.24). Barium in the glass matrix of the prefilters tested is considered to be the source of the barium found in the acid extractants.

While the volume of acid used to extract the prefilters (50 ml) is relatively small compared to the possible volume of extract in the Extraction Procedure when applied to actual wastes, it should be noted that wastes with relatively low solids content (e.g. <20% by weight of waste sample) and which are already acidic (pH <5.0) would be more affected by the barium contributions from the prefilter. Until the problem can be resolved, the prefilters cited here should be used only with caution and full awareness of the nature and level of potential contamination. It is recommended that an acidic blank (0.1N acetic acid) precede filtrations and be stored for future barium analysis (and sample value correction). Such analysis would only be performed in the event that the corresponding sample extract exceeded the criterion level for barium.

While the problem of barium contamination was being studied, work was conducted to determine if the stainless steel extractors or filter apparatus contributed to the contamination of the extracts. This was of special concern since close examination of the Nuclepore filtration apparatus suggested a possible source of metal contamination. Specifically, the underdrain support appeared to have been attacked by the materials passing through the equipment. Areas of apparent breakdown at the resistive welds were visible and exposed ends of the stainless steel rods which compose the underdrain support showed

TABLE 30. EVALUATION OF BACKGROUND CONCENTRATIONS OF ELEMENTS FROM EP EQUIPMENT: MEANS AND STANDARD DEVIATIONS OF ATOMIC ABSORPTION ANALYSES OF FILTERED AND EXTRACTED ACIDIFIED* BLANK SAMPLES

	Ba (mg/l)		Cr (mg/l)		Pb (mg/l)	
Extractor No.**	$\bar{x}$	s	$\bar{x}$	s	$\bar{x}$	s
1	1.0	0.2	0.21	0.02	0.13	0.03
1	0.24	0.01	0.18	0.01	0.10	0.04
2	1.0	0.2	0.21	0.01	0.13	0.03
2	1.12	0.02	0.04	0.01	<0.09	-
2 (Filter No. 2)	1.2	0.1	0.13	0.01	<0.02	-
3	1.2	0.2	0.10	0.01	0.14	0.03
4	2.6	0.3	0.20	0.01	0.14	0.03
4	0.6	0.3	0.05	0.00	<0.02	-
4	0.78	0.00	0.06	0.01	<0.09	-
5	1.2	0.3	0.11	0.01	0.05	0.03
5	0.8	0.3	0.08	0.00	0.03	0.03
5	0.82	0.06	0.04	0.00	<0.09	-
6	1.2	0.2	0.10	0.01	<0.02	-
7	0.5	0.4	0.20	0.01	<0.02	-
7	1.04	0.12	<0.04	-	<0.09	-

* Blank prepared by adding 400 ml of 1.0 M acetic acid (maximum amount allowable in the EP) to 1600 ml of distilled water.

** Aliquots for extraction were filtered through filtration apparatus No. 3 (Filter No. 3), unless otherwise indicated.

evidence of active corrosion. These areas offer potential for carryover of prior sample material -- the roughened, pitted surface and weld cracks are not readily cleaned -- and for direct contribution of metal contamination through corrosive breakdown and dissolution.

The Nuclepore filtration apparatus used in our studies is made of Type 304 stainless steel. A "sanitary" version is available with Type 316 stainless steel for all sample-contacting surfaces, but this version has not been tested in our laboratory.

Several distilled water blanks showed levels of chromium above 0.06 mg/l. About 75 percent of these were filtration blanks -- distilled water run through the filtration apparatus and analyzed -- while the remainder went through both the extraction and filtration apparatus. The distilled water filtration blank which showed the highest level of chromium (0.38 mg/l) immediately followed the running of a sample containing 33 mg/l chromium. In this case, a "memory effect" is likely, i.e., the washing procedure we employed for the filtration apparatus was inadequate.

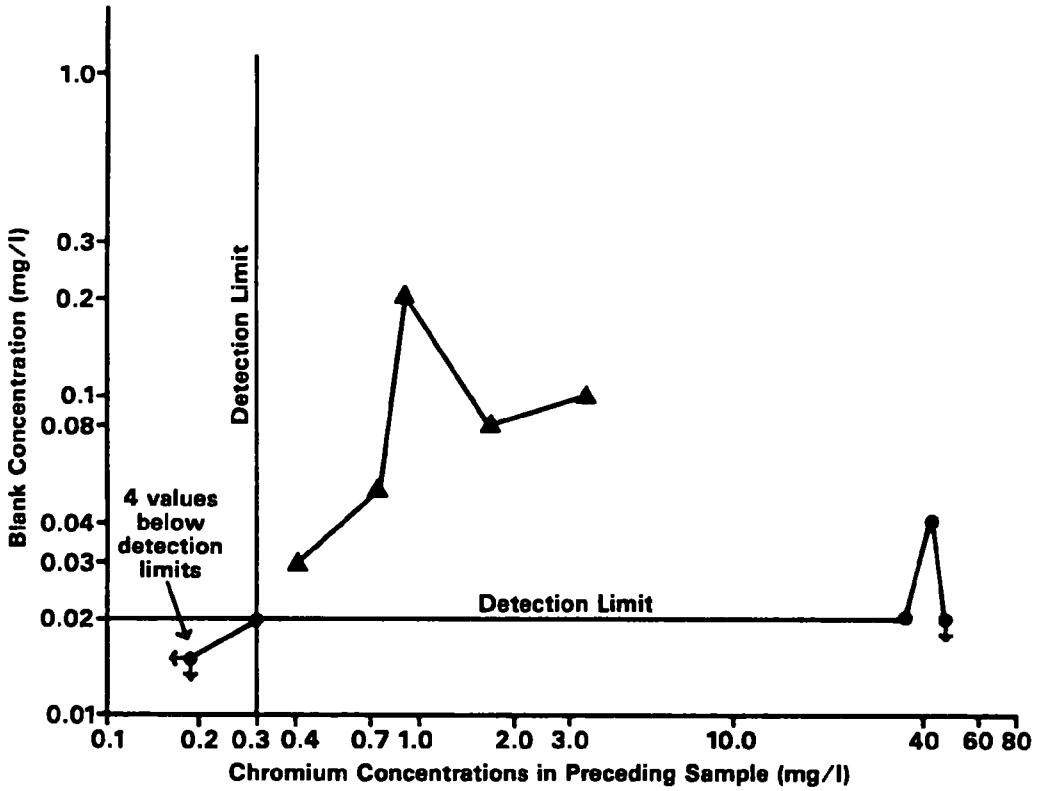

Figure 4. Levels of chromium contamination found in extraction blanks of distilled water (●) and 0.1N acetic acid (▲) which followed hazardous waste samples.

Nearly 70 percent of the acidified apparatus blanks -- run immediately after waste samples were extracted and routine cleaning performed -- showed levels of 0.05 mg/l or more of chromium. However, no consistent trends could be determined from the data to suggest that any one of the blade-type extractors or filtration apparatus was contributing to the contamination more than others.

Apparatus Abrasion/Contamination Study--

To assess the potential problem, a worst-case situation was devised to measure the maximum level of contamination that might be anticipated to occur using a stainless steel blade-type extractor. Specifically, we extracted samples of sand, a highly abrasive material, with both strongly acidic (pH 2.5) and mildly acidic (pH 5) solutions, using nitric and acetic acids, respectively. To insure that non-extractor sources would not be affecting the results, parallel extractions of the sand were conducted in polyethylene tumbler-type extractors designed by researchers at the National Bureau of Standards.

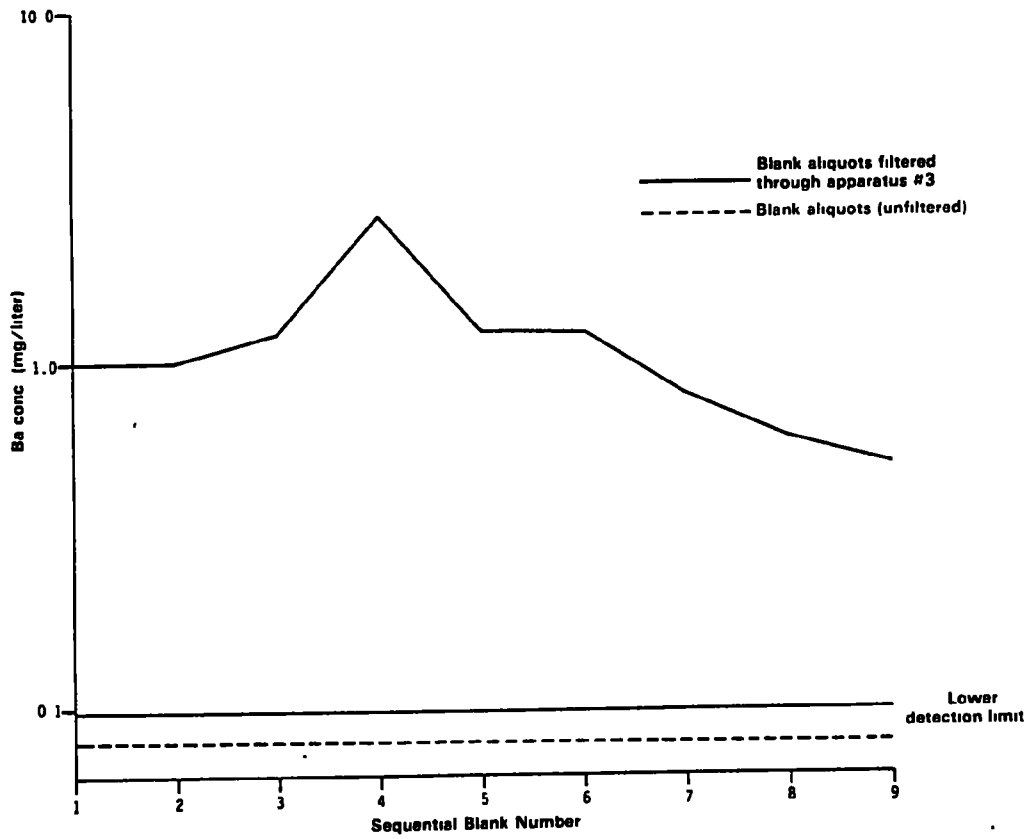

Figure 5. Evaluation of apparatus contamination - Comparison of filtered and unfiltered aliquots (splits) of sequential acidified blanks.

The results of the sand abrasion contamination study are presented in Table 31. No detectable chromium was leached from the acid-washed sand in the NBS type tumbler, nor were detectable levels found in either filtered or unfiltered reagent blanks. However, chromium levels up to 0.18 mg/l were found in the unfiltered nitric acid extracts from the blade-type extractors. The levels of chromium in the corresponding filtered samples were approximately one-half that in the unfiltered samples. Only one of the two unfiltered acetic acid extracts from blade-type extractors showed any detectable levels of chromium. After filtration, the chromium concentration dropped to below the level of detection (0.01 mg/l). These data suggest that the use of stainless steel extractors for testing strongly acidic, abrasive wastes may result in contamination of the extracts, and should be avoided. Similar findings with stainless steel extractors and abrasive wastes were recently reported (Brown et al. In press).

The data for iron also indicate that stainless steel components might abrade and contribute metals to highly acidic extracts. While detectable iron

TABLE 31. SAND ABRASION/CONTAMINATION STUDY - CONCENTRATIONS OF CHROMIUM, IRON, AND BARIUM DETECTED IN FILTERED AND UNFILTERED REAGENT BLANKS AND EXTRACTS OF ACID-WASHED SAND

Reagent/Extract Analyzed		Chromium (mg/l)		Iron (mg/l)		Barium (mg/l)	
		$\bar{x}$	s	$\bar{x}$	s	$\bar{x}$	s
Reagent Blank, pH 2.5							
Unfiltered		<0.01	--	<0.06	--	<0.07	--
Filtered	Apparatus 2	<0.01	--	0.12	0.01	0.50	0.04
	Apparatus 3	<0.01	--	0.09	0.04	0.44	0.01
Reagent Blank, pH 5.0							
Unfiltered		<0.01	--	<0.06	--	<0.07	--
Filtered	Apparatus 2	<0.01	--	<0.06	--	<0.07	--
	Apparatus 3	<0.01	--	<0.06	--	<0.07	--
Extract from NBS Extractor, pH 2.5							
Unfiltered		<0.01	--	<0.06	--	<0.07	--
Filtered	(Apparatus 3)	<0.01	--	<0.06	--	0.47	0.04
Extract from NBS Extractor, pH 5.0							
Unfiltered		<0.01	--	<0.06	--	<0.07	--
Filtered	(Apparatus 2)	<0.01	--	<0.06	--	<0.07	--
Extract from Blade Extractor 1, pH 2.5							
Unfiltered		0.18	0.00	3.46	0.03	<0.07	--
Filtered	(Apparatus 3)	0.09	0.00	3.53	0.02	0.47	0.04
Extract from Blade Extractor 2, pH 2.5							
Unfiltered		0.15	0.01	1.99	0.02	<0.07	--
Filtered	(Apparatus 3)	0.08	0.01	1.94	0.02	0.41	0.02
Extract from Blade Extractor 4, pH 5.0							
Unfiltered		0.06	0.00	0.54	0.01	<0.07	--
Filtered	(Apparatus 2)	<0.01	--	0.09	0.00	0.09	0.04
Extract from Blade Extractor 5, pH 5.0							
Unfiltered		0.01	0.01	0.70	0.01	<0.07	--
Filtered	(Apparatus 2)	<0.01	--	0.44	0.01	0.12	0.04

levels were noted in the dilute acetic acid extracts, levels in the nitric acid extracts were approximately five times as high. Filtration of the nitric acid extracts did not reduce the iron levels below those of their unfiltered analogs. However, filtered acetic acid extracts did show substantially lower iron values than their unfiltered counterparts. One possible mechanism to explain this phenomenon is that the nitric acid is much better at actually dissolving the stainless steel fragments abraded from the extractor walls, and, as soluble iron, none is being lost to filtration.

Detectable levels of iron were also contributed to nitric acid extracts by both of the filtration apparatus tested. This finding is consistent with the premise that corrosion and dissolution of the stainless steel filter apparatus occurs under the more acidic conditions.

Barium was detected only in those extracts (both nitric and acetic) which passed through the filtration apparatus. This finding is similar to that cited previously with acetic acid blank splits in which Ba was only detectable in the extract split which was filtered.

The frequency and magnitude of blank contamination attributable to extraction or filtration apparatus (either through sample carryover or direct contribution, e.g. erosion and dissolution) was determined during the conduct of the extractor comparison study (Table 32). The large numbers of samples and blanks run in this study provided a good opportunity to examine the relative background contributions of barium, chromium, and lead. The data in Table 32 are for the blanks that accompanied the filtration and extraction of Pond 12, Pond 0, and biosolids samples.

All of the acidic blanks that were exposed to extraction and filtration apparatus showed levels of barium which exceeded detection limit concentrations. None of the unfiltered blanks contained detectable barium levels. These data clearly demonstrate the problem of barium contamination from the filtration apparatus (prefilter) discussed previously. Note the high average concentration of barium in blanks associated with the Pond 0 sample runs. Unfortunately, neither "filtered-only" nor "extracted-only" data were available for the Pond 0 samples to determine if contributions other than those from the filtration apparatus are reflected in the high blank values recorded.

All of the blanks that showed detectable chromium levels had been run through blade-type rotary extractors. No chromium was detected in blanks from either the tumbling-type extractor or wrist-arm shaker. There is some evidence -- from the lower frequency of extraction blanks with chromium detectable after filtering -- which suggests that filtration does remove a portion of the chromium released from the stainless steel blade-type extractor.

Although nearly 40 percent of the blanks run in association with Pond 12 samples showed detectable levels of lead, these levels only slightly exceeded the detection limit and would be unlikely to represent a significant factor in misclassification of a waste. No lead was detected in blanks associated with either the biosolids or Pond 0 samples.

TABLE 32. FREQUENCY AND MAGNITUDE OF CONTAMINATION OF BLANKS (0.1N ACETIC ACID) FROM EXTRACTION AND FILTRATION APPARATUS OBSERVED DURING EXTRACTOR COMPARISON STUDY

Type of Process Blank*	Corresponding Waste Run	Metal	Detection Limit (mg/l)	Blanks Exceeding Detection Limit Concentrations: Average Conc. (mg/l)	Standard Deviation (mg/l)	Frequency of Occurrence Number/Number Possible
E	P12	Ba	0.177	0.544	0.320	0/26
E	P12	Cr	0.080	0.122	0.060	3/26
E	P12	Pb	0.091	0.104	0.014	4/26
EF	P12	Ba	0.177	0.635	0.169	26/26
EF	P12	Cr	0.080	0.141	NA	1/26
EF	P12	Pb	0.091	0.110	0.010	15/26
E	BIO	Ba	0.099	NA	NA	0/67
E	BIO	Cr	0.016	0.064	0.035	11/67
E	BIO	Pb	0.034	NA	NA	0/67
EF	BIO	Ba	0.099	0.672	0.102	67/67
EF	BIO	Cr	0.016	0.050	0.024	11/67
EF	BIO	Pb	0.034	NA	NA	0/67
EF	PO	Ba	0.295	1.61	0.29	40/40
EF	PO	Cr	0.036	2.39	1.12	8/40
EF	PO	Pb	0.049	NA	NA	0/40

* E = Extraction only; EF = Extraction plus filtration
† Blanks accompanied processing of PO (Pond O), P12 (Pond 12), and BIO (Biosolids) samples.

ANALYTICAL PROCEDURES EVALUATION

Reproducibility

The proposed regulations require that atomic absorption methods be used for analysis of the EP extracts for arsenic, barium, cadmium, chromium, lead, mercury, selenium and silver. As described in the approach, these methods were evaluated to determine their accuracy and reproducibility for analysis of the EP extracts. Precision of the atomic absorption analyses of EP extracts for barium, chromium, and lead is shown in Tables 17, 18a-b, and 21. The highest relative standard deviations for the extract analyses are 3.1 percent for chromium, 4.6 percent for lead and 16.4 percent for barium (Tables 17, 18a).

The large variability observed in data from the analysis for barium in EP extracts is associated with the use of the nitrous oxide-acetylene flame. This flame is more susceptible to performance variations than the air-acetylene flame. Solids accumulating on the burner slit (observed when some extracts were analyzed) caused the variability to be higher in the barium analyses than in the chromium or lead analyses. Low recoveries for barium spikes added to some extracts indicate an interference. A method of additions calibration that incorporates a dilution step should effectively compensate for a range of interference (such as suppression), although, as mentioned elsewhere, precision can suffer if the dilution reduces the concentration of analyte close to its detection limit.

Detection Limit/Sensitivity

Detection limit is used in this report to indicate the minimum distinguishable concentration of an analyte. While the term sensitivity can have the same interpretation, confusion can arise since sensitivity in atomic absorption spectrophotometry refers to a concentration that produces 1 percent absorption. In addition, the IUPAC defines sensitivity as the slope of the calibration curve and not as the minimum detectable level.

For both flame atomic absorption and inductively coupled plasma emission, the conventional procedure involves zeroing the instrument response on some solution. Typically, the dilute acid used to stabilize the standard solutions is employed to set the instrument zero level. The instrumental detection limit for an analysis session is determined from repeated measurements on the solution used to zero the instrument. Therefore measurement precision affects the detection limit estimates. A conservative estimate of the detection limit is obtained by multiplying the standard deviation obtained for the calibration blank measurements by three, which requires a measurement to exceed the 99 percent confidence level before it is considered detectable. By interspersing the measurements on the calibration blank solution among measurements on samples, a more realistic estimate of the instrumental detection limit for an analysis session is produced than by consecutive measurements.

The instrumental detection limit described above provides an estimate that can vary depending upon the sample matrices. Samples with high dissolved solids can produce fluctuations in the flame and plasma behavior that can persist during measurements on the calibration blank solution.

Accuracy

For accurate analyses, the instrumental response to elements in the calibrating solutions must be the same as for the elements in the sample solutions. The comparability of standards prepared with 0.5 percent (v/v) nitric acid (the calibrating matrix), with acetate buffer (pH 5.0, 0.2M), and with selected waste extracts was evaluated by linear regression analysis. Standard solutions of the three matrices -- at three concentration levels that included the proposed toxic waste criteria levels (Federal Register, December 18, 1978) -- were prepared and analyzed for arsenic, barium, cadmium, chromium, mercury, lead, selenium and silver using atomic absorption spectrophotometry. Measurements made four times on each of the standard solutions and on the appropriate spiked extracts provided data for linear regression calculations. The values obtained were regressed against those of the nitric acid standards to compute the regression slopes indicated in Table 33 and a statistical difference was indicated when the 99 percent confidence intervals for the slopes did not include the value 1.0.

TABLE 33. SLOPE OF STANDARDS IN ACETATE BUFFER AND IN HAZARDOUS WASTE EXTRACTS RELATIVE TO SLOPE OF STANDARDS IN NITRIC ACID

	Standards in Acetate Buffer			Standards in HW Extracts		
Element	Slope ±	99% C.I.	Difference*	Slope ±	99% C.I.	Difference*
Arsenic	0.918	±0.46	-8%	0.896	±0.049	-10%
Barium	1.041	±0.023	+4%	1.014	±0.021	No
Cadmium	0.975	±0.009	-3%	1.023	±0.045	No
Chromium	0.986	±0.015	No	1.011	±0.017	No
Mercury	1.003	±0.146	No	0.976	±0.149	No
Lead	0.873	±0.028	-13%	1.055	±0.023	+6%
Selenium	1.019	±0.168	No	0.898	±0.126	No
Silver	1.016	±0.022	No	1.016	±0.039	No

*Statistical difference in slope relative to standards in nitric acid.

For acetate buffer solutions, the slope values were within 8 percent of 1.00 except for Pb which was 13 percent low. Since other investigators have reported the loss of Pb to container surfaces from solutions with pH >2, the low slope for Pb in the acetate buffer (pH 5) is not unexpected.

None of the slope values obtained with waste extracts differed more than 10 percent from 1.00 when all data values were included in the regression. However, quantification of Hg in EP extracts, by the method of standard additions, could provide more accurate values than quantifications based on standards prepared in either nitric acid or an acetate buffer. The Hg responses in the waste extracts appeared to be suppressed at the lower concentrations (slope was 15 percent low when highest Hg solution was excluded). Such suppression would not be apparent at high spike concentrations if the suppressant were "consumed" by mercury at lower levels. The agreement observed between the Hg in acetate buffer and nitric acid suggests suppression of instrumental response, rather than loss from the solution.

Recovery of analyte added to sample extracts can provide an indication of accuracy. Tables 34-41 show recoveries near 100 percent for many waste samples, but low recovery for barium and lead has been found with undiluted Pond O extracts. Recovery near 100 percent provides an indication (but no guarantee) of accuracy. For example, the spike may be added in a form different from the endogenous form, and consequently it may not reflect the behavior of the endogenous analyte. Also, a suppressant may be consumed by the endogenous analyte so that added analyte is not suppressed. Recovery data will not indicate whether background absorption is contributing inaccuracy. Use of a background corrector or a non-absorbing wavelength can compensate for this type of interference. Digestion of EP extracts that contain organic components might remove the suppression observed with the undiluted Pond O extracts. Digestion of EP extracts could also eliminate or minimize the accumulation of solids on the burner head which can affect data quality and even force interruption of the analysis (so the burner can be cleaned).

Accuracy will suffer if measurement interference is not detected and corrected. Undiluted Pond O extracts (from second collection) exhibited about a 2-fold suppression of the lead concentration. Where spike volumes did not exceed 1 percent of sample volume, lead recovery was only 52 ± 4 percent. However, dilution by the addition of 10 percent or more volume of spiking solution obscured this suppression and recoveries approached 100 percent. Calibration by the method of additions should be used to provide more accurate data when spiked extract values differ significantly (±20%) from full recovery. Enhancement as well as suppression of the spike may occur. Evidence for response enhancement was found for chromium and selenium (Tables 35, 41). The suppression or enhancement of atomic absorption responses can arise from components in the sample matrix that alter the fluid uptake rate, nebulization efficiency and/or the atomization efficiency. High dissolved solids can affect these characteristics; the dissolved solids content for an undiluted Pond O extract was measured at 21.7 ± 0.3 percent (weight/weight).

While addition of lanthanum to samples has been found to minimize suppression of the barium atomic absorption response for sediment extracts

TABLE 34. QUALITY CONTROL DATA: COMPARISON OF BARIUM SPIKE RECOVERY

Sample	Sample Conc. (mg/l)	Spike (mg/l)	Spiked Conc. (mg/l)	Spike Recovery (%)	RSD* (Analysis) (%)
Site A, Pond O	1.55	2.00	2.21	33	5
Site A, Pond P	3.10	2.00	4.96	93	11
Site B, Paint Sludge	1.96	2.00	3.98	101	33
Site D, Chromate Oxidation Paste	0.44	2.00	1.6	60	43
Site D, API Oil Separator	<0.6	2.00	2.11	105	31
Site D, Separator Sludge	0.80	5.0	5.96	98	1
Site E, Filter Cake	0.80	10.0	10.8	100	1
Site G, Filter Cake	<0.6	2.00	1.84	92	7
Site G, Asbestos Cleanup Stream	0.4	2.00	2.67	114	4
Site H, CPI Decant Pit	2.03	2.00	4.42	120	3
Site I, Chlorine Process Sludge	0.39	2.00	2.28	94	23
Site J, Catalyst Fines	<0.6	2.00	1.72	86	13
Site K, Alkali Rust Remover	2.43	2.00	4.35	96	2
Site K, Tin-Lead Waste	1.02	2.00	3.05	101	2
Blanks, Filtration Apparatus, Water (2)	0.10	2.00	2.06	103	2
Blank, Extraction Apparatus, Water	0.10	2.00	2.10	100	1
Blanks, Extraction Apparatus, Acetic Acid (2)	<0.08	2.00	2.09	104	3
Blank, Extraction Apparatus, Filtered, Acetic Acid	0.74	2.00	2.85	106	2
Blank, Sample Container, Water	<0.10	2.00	2.10	105	5

* Relative Standard Deviation

TABLE 35. QUALITY CONTROL DATA: COMPARISON OF CHROMIUM SPIKE RECOVERY

Sample	Sample Conc. (mg/l)	Spike (mg/l)	Spiked Conc. (mg/l)	Spike Recovery (%)	RSD* (Analysis) (%)
Site A, Pond 0	7.83	2.00	9.64	90	10
Site A, Pond 0	10.5	2.20	12.6	95	8
Site B, Paint Sludge	1.02	2.00	2.15	108	6
Site D, Chromate Oxidation Paste	0.80	2.00	2.91	106	3
Site D, API Oils Separator	9.12	2.00	11.39	113	9
Site E, Blast Furnace Filter Cake	<0.3	2.00	1.85	93	8
Site E, Mill Scale	<0.3	2.00	2.03	102	8
Site G, Asbestos Cleanup Stream	<0.3	2.00	1.83	92	0
Site G, Asbestos Cleanup Stream	<0.3	2.00	2.76	138	3
Site H, CPI Decant Pit	4.53	2.00	1.83	92	0
Site J, Industrial Sewage Filter Cake	<0.3	2.00	2.41	120	4
Site J, Industrial Sewage Filter Cake	4.25	2.00	7.14	144	3
Site K, Alkali Rust Remover	4.38	2.50	6.99	104	0
Site K, Tin-Lead Waste	7.92	2.50	10.1	89	1
Blanks, Filtration Apparatus, Water (2)	<0.3	2.00	1.98	99	0
Blank, Extraction Apparatus, Filtered, Acetic Acid	0.6	2.00	2.85	112	1
Blank, Extraction Apparatus, Acetic Acid	<0.3	2.00	2.02	101	1
Blank, Extraction Apparatus, Acetic Acid	<0.3	2.00	2.03	101	6

* Relative Standard Deviation

TABLE 36. QUALITY CONTROL DATA: COMPARISON OF LEAD SPIKE RECOVERY

Sample	Sample Conc. (mg/l)	Spike (mg/l)	Spiked Conc. (mg/l)	Spike Recovery (%)	RSD* (Analysis) (%)
Site A, Pond 0	4.5	2.00	6.69	110	6
Site A, Pond 0	0.83	2.00	2.94	106	3
Site B, Paint Sludge	0.05	0.50	0.62	114	1
Site B, Paint Sludge	0.12	1.00	1.10	98	2
Site B, Paint Sludge	0.05	1.00	1.25	120	7
Site B, Paint Sludge	0	2.00	2.33	117	3
Site D, Chromate Oxidation Paste	<0.02	1.00	1.14	114	2
Site D, API Oil Separator	0.14	1.00	1.28	114	5
Site E, Mill Scale	<0.08	2.00	2.05	102	2
Site G, Asbestos Cleanup Stream	0.05	2.00	2.37	116	1
Site G, Asbestos Cleanup Stream	0.11	0.50	0.43	64	1
Site H, CPI Decant Pit	0.21	2.00	2.47	113	8
Site J, Catalyst Fines	0.02	2.00	2.23	110	1
Site J, Industrial Sewage Filter Cake	0.28	2.00	2.59	116	3
Site J, Industrial Sewage Filter Cake	<0.12	2.00	2.13	106	1
Blank, Extraction Apparatus, Water	<0.09	2.00	2.11	106	2
Blank, Extraction Apparatus, Acetic Acid	<0.09	2.50	2.54	102	1
Blank, Sample Container, Water	<0.02	2.00	2.00	100	1

* Relative Standard Deviation

TABLE 37. QUALITY CONTROL DATA: COMPARISON OF MERCURY SPIKE RECOVERY

Sample	Sample Conc. (µg/l)	Spike (µg/l)	Spiked Conc. (µg/l)	Spike Recovery (%)	RSD* (Analysis) (%)
Site B, Paint Sludge	1.31	10.00	9.10	78	1
Site B, Paint Sludge	1.31	20.00	18.4	86	0
Site B, Paint Sludge	1.31	50.00	49.9	97	0

* Relative Standard Deviation

TABLE 38. QUALITY CONTROL DATA: COMPARISON OF SILVER SPIKE RECOVERY

Sample	Sample Conc. (mg/l)	Spike (mg/l)	Spiked Conc. (mg/l)	Spike Recovery (%)	RSD* (Analysis) (%)
Site B, Paint Sludge	<0.01	0.25	0.24	96	0
Site B, Paint Sludge	<0.01	0.50	0.47	94	0
Site B, Paint Sludge	<0.01	1.00	0.98	98	0

* Relative Standard Deviation

TABLE 39. QUALITY CONTROL DATA: COMPARISON OF ARSENIC SPIKE RECOVERY

Sample	Sample Conc. (mg/l)	Spike (mg/l)	Spiked Conc. (mg/l)	Spike Recovery (%)	RSD* (Analysis) (%)
Site B, Paint Sludge	0.02	0.20	0.26	115	1
Site B, Paint Sludge	0.02	0.50	0.55	106	1
Site B, Paint Sludge	0.02	1.00	1.04	102	5
Site E, Mill Scale	0.00	0.50	0.52	104	7
Site G, Asbestos Cleanup Stream	0.02	0.50	0.57	110	0
Site I, Chlorine Process Sludge	0.18	0.50	0.79	122	3
Site J, Catalyst Fines	0.15	0.50	0.69	108	4

* Relative Standard Deviation

TABLE 40. QUALITY CONTROL DATA: COMPARISON OF CADMIUM SPIKE RECOVERY

Sample	Sample Conc. (mg/l)	Spike (mg/l)	Spiked Conc. (mg/l)	Spike Recovery (%)	RSD* (Analysis) (%)
Site B, Paint Sludge	0.02	0.10	0.12	100	2
Site B, Paint Sludge	0.02	0.50	0.54	104	1
Site G, Mill Scale	<0.0	2.00	1.99	100	1
Site J, Industrial Sewage Filter Cake	0.07	2.00	2.02	98	1
Site J, Industrial Sewage Filter Cake	0.06	2.00	1.96	95	1
Blank, Extraction Apparatus	0.00	2.00	1.94	97	1
Blank, Extraction Apparatus	0.00	2.00	1.99	100	1

* Relative Standard Deviation

TABLE 41. QUALITY CONTROL DATA: COMPARISON OF SELENIUM SPIKE RECOVERY

Sample	Sample Conc. (mg/l)	Spike (mg/l)	Spiked Conc. (mg/l)	Spike Recovery (%)	RSD* (Analysis) (%)
Site B, Paint Sludge	<0.05	0.05	0.8	160	1
Site B, Paint Sludge	<0.05	0.10	0.14	140	2
Site B, Paint Sludge	<0.05	0.20	0.24	120	1
Site E, Mill Scale	<0.08	0.50	0.68	136	7
Site G, Asbestos Cleanup Stream	0.11	0.50	0.43	64	1
Site I, Chlorine Process Sludge	0.32	0.50	0.76	78	12
Site J, Catalyst Fines	0.13	0.50	0.32	38	10

* Relative Standard Deviation

(McKown et al., 1978), use of lanthanum with undiluted Pond O extracts did not show a change in the suppression. All barium analyses were conducted with 1000 mg/l potassium added for ionization control in the flame.

Dilution of EP extracts can minimize interference suppression and the need for calibration by the method of additions. Pond O extracts (second set) diluted 10-fold before flame AAS analysis showed spike recovery at 97 ± 1 percent. Recovery for lead was also near 100 percent for diluted extracts of Pond O (first set) samples (Table 36). Table 42 shows suppressed and unsuppressed lead data. Dilution of extracts can also reduce clogging problems with the analytical instruments. The dilution technique is limited by the criteria level and the instrument sensitivity.

Contamination can also arise from inadequate cleaning procedures for equipment. Extractor blanks following some high-chromium wastes revealed some cross-over contamination (as noted previously). Filters can contribute contamination as observed for barium.

Accuracy can be jeopardized without the sample itself being contaminated. When cleanout of the atomic absorption nebulizer and burner system between solutions is not adequate, falsely high values can be obtained. This effect is referred to as "memory" because cross-over contamination of the solutions

TABLE 42. SUPPRESSION OF ATOMIC ABSORPTION Pb RESPONSE BY UNDILUTED EP EXTRACTS OF POND O SAMPLES COLLECTED NOVEMBER 1979

Sample ID	Pb (mg/l)	
	Undiluted Extracts	Diluted Extracts*
10 mg/l std	9.97	10.13
30 mg/l std	30.09	30.07
163689W	19.92	40.90 ± 0.53
163702N	18.99	39.80 ± 0.89
163706R	19.38	35.35 ± 0.45
163709W	19.81	39.50 ± 1.42
163719N	18.84	29.85 ± 0.80
163724R	18.34	29.70 ± 0.71
10 mg/l std	9.94	10.20
30 mg/l std	29.51	30.52

* Corrected for 10-fold dilution.

per se is not involved. Waste extracts analyzed (using a Perkin-Elmer Auto Sampler 200) for lead immediately after high-lead extracts, exhibited the "memory" effect --near 1 mg/l -- that would have resulted in falsely classifying the wastes as hazardous (using the proposed (FR 1978) extract lead criterion level of 0.5 mg/l). When lead at 5 mg/l in acetate buffer was analyzed, the succeeding measurements exhibited "memory" that exceeded the proposed 0.5 mg/l criterion level (0.63 and 0.58 mg/l). No such effect was found when the 5 mg/l lead was dissolved in nitric acid or an EP extract for analysis. Although a memory effect of 0.15 mg/l was observed after 10 mg/l chromium (in 0.5 percent nitric acid) --with an air-acetylene flame --"memory" was not observed following an extract containing 39 mg/l chromium during the same analytical session. Instrumental interference from sample "memory" can be eliminated by appropriately scheduled rinses or by prolonging the solution uptake before the response is measured.

Problems

Extracts that are high in dissolved solids can clog the atomic absorption burner and prevent analyses (the 3-slot air-acetylene burner is more resistant to clogging than the single slot burner). Even when insufficient to prevent measurements, burner clogging can cause data quality to suffer. Dilution of extracts (with 0.5 percent nitric acid) can reduce clogging behavior, but may also reduce the concentration below the detection limit. Use of the furnace atomic absorption technique would be required for such cases. Digestion of organic-containing extracts could reduce clogging problems. Chelate-extraction may prove necessary for extracts with high inorganic salt contents.

Suppression interference has been observed for barium and lead in some extracts. Use of the method of additions is indicated for such cases. Dilution can offer an alternative to the method of additions in some cases. For example, ten-fold dilution of Pond O extracts with 0.5 percent nitric acid essentially eliminated interference suppression for lead but not for barium. Of course, dilution does require more sample preparation. Mercury analysis was not a problem, except for evidence that the method of additions may be required for some extracts. However, low extraction of mercury could be considered a problem as previously discussed.

Background (or non-analyte) absorption is a potential problem. Soil digests analyzed for cadmium -- without deuterium lamp background correction -- have exhibited values more than six-fold higher then the corrected values.

REFERENCES

Brown, D. K., M. P. Maskarinec, and F. W. Larimer. (Unpublished EPA report). Comparison of EP Extracts and Landfill Leachates. Submitted by Oak Ridge National Laboratory, Oak Ridge, Tennessee under EPA-IAG-78-D-X0372. Municipal Environmental Research Laboratory, Cincinnati, Ohio.

Cochran, W. G. 1963. Sampling Techniques, 2nd Edition, John Wiley and Sons, New York.

deVera, E. R., B. P. Simmons, R. D. Stephens and D. L. Storm. 1980. Samplers and Sampling Procedures for Hazardous Waste Streams. EPA-600/2-80-018. Municipal Environmental Research Laboratory, Cincinnati, Ohio.

DeWalle, F. B., T. Zeisig, J. F. C. Sung, D. M. Norman, J. B. Hatlen, E. S. K. Chian, M. G. Bissel, K. Hayes, and D. Sanning. (In press). Analytical Methods Evaluation for Applicability in Leachate Analysis, Municipal Environmental Research Laboratory, Cincinnati, Ohio.

Environmental Protection Agency. 1979. Methods for Chemical Analysis of Water and Wastes. EPA-600/4-79-020. Environmental Monitoring and Support Laboratory, Cincinnati, Ohio.

Environmental Protection Agency. 1980. Test Methods for Evaluating Solid Waste: Physical/Chemical Methods. SW-646. Office of Water and Waste Management, Washington, D.C.

Federal Register. 1978. Hazardous Waste Guidelines and Regulations. Volume 43:243 - Monday, December 18, 1978.

Federal Register. 1980. Hazardous Waste and Consolidated Permit Regulations. Volume 45:98 - Monday, May 19, 1980.

McKown, M. M., C. R. Tschrin and P. P. F. Lee. 1978. Investigation of Matrix Interferences for AAS Trace Metal Analyses of Sediments. EPA-600/7-78-085. Environmental Monitoring and Support Laboratory, Cincinnati, Ohio.

APPENDIX 1.

USE OF THE POND SAMPLER AND THE COLIWASA

POND SAMPLER

The pond sampler is a glass beaker (usually of 250- to 800-ml capacity) affixed with a clamp to the end of an aluminum handle that is adjustable from 8 to 15 feet in length (Figure A-1). It is used to collect liquids and semisolids from ponds, pits, and lagoons. Two persons are required for sampling; both must wear appropriate personal safety equipment. Samples can be taken at or below the surface. The stepwise procedure for use of the pond sampler is presented below.

- Make sure the beaker is acid washed (and acetone rinsed) and the sampler is assembled properly. (Nuts and bolts must be tight to secure the beaker, pole, and clamp.)

- Sample at that depth and distance prescribed in the sampling plan. To collect a sample, lower the beaker into the pond in an inverted position. At the prescribed depth, turn the handle to upright the beaker. Raise the sampler clear of the pond surface and swing it carefully back over the shore avoiding spillage.

- Pour the sample into the sample container slowly to avoid splashing sampling personnel or losing sampler contents.

- Clean the sampler after each sample. When subsamples for composites are being taken from the same pond, cleaning can usually be accomplished by rinsing the beaker in the pond close to (but not disturbing) the succeeding sampling site. Between locations containing different wastes, disassemble the sampler, wipe off oily or clinging solvent material, flush the handle and clamp with freshwater and replace the beaker with a fresh acid-washed, acetone-rinsed beaker or perform the wash and rinse on site.

- Close the container in which the sample is to be shipped, record all information in the logbook and on appropriate forms after each sample, and attach the proper labels and seals to the sample container.

- Clean sampler thoroughly on site if possible, and pack away. If sampler must be returned to the laboratory for cleaning, dismantle sampler and pack parts in plastic bags to avoid contamination of personnel, vehicles, or other equipment.

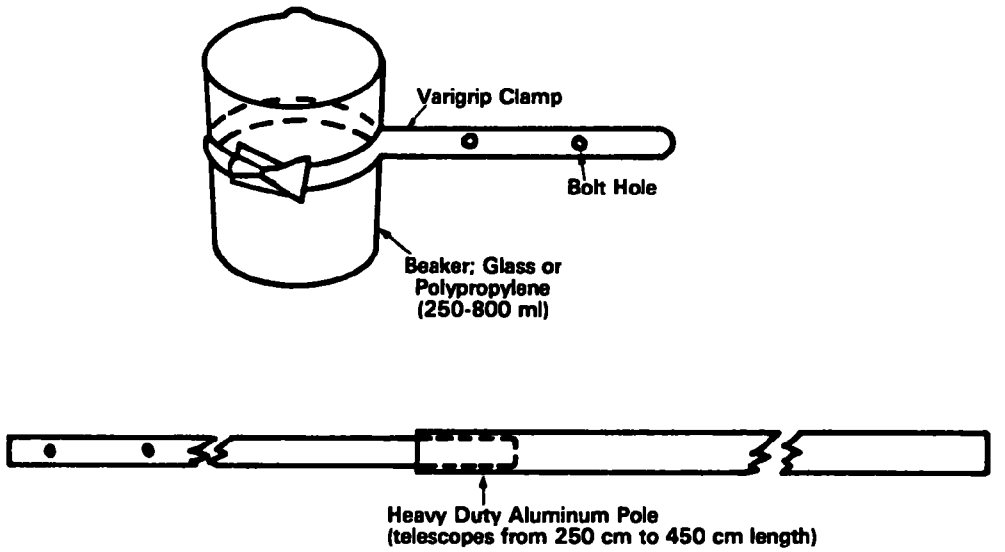

Figure A-1. Pond sampler.

Modified from de Vera et al., 1980. Samplers and sampling procedures for hazardous waste streams. EPA-600/2-80-018, Municipal Environmental Research Laboratory, Cincinnati, Ohio.

COLIWASA

The COLIWASA (COmposite LIquid WAste SAmpler) is a tube-type sampler, 5 feet long and between 1-3/8 and 1-5/8 inches in diameter (ID) (Figure A-2). It can be fabricated from various materials to sample almost any kind of liquid waste from drums, barrels, or vacuum trucks. A stepwise procedure for use of the COLIWASA is presented below.

- The operator must make sure the COLIWASA is clean, functioning properly, and the stopper fits tightly. Adjust the stopper rod length if necessary.

- Two persons are required for sampling; both must wear appropriate personal safety equipment. Company personnel must have already opened the waste storage vessel.

- Open the T-handle and push it down so it lies on the locking block forming a T between the handle and sample tube.

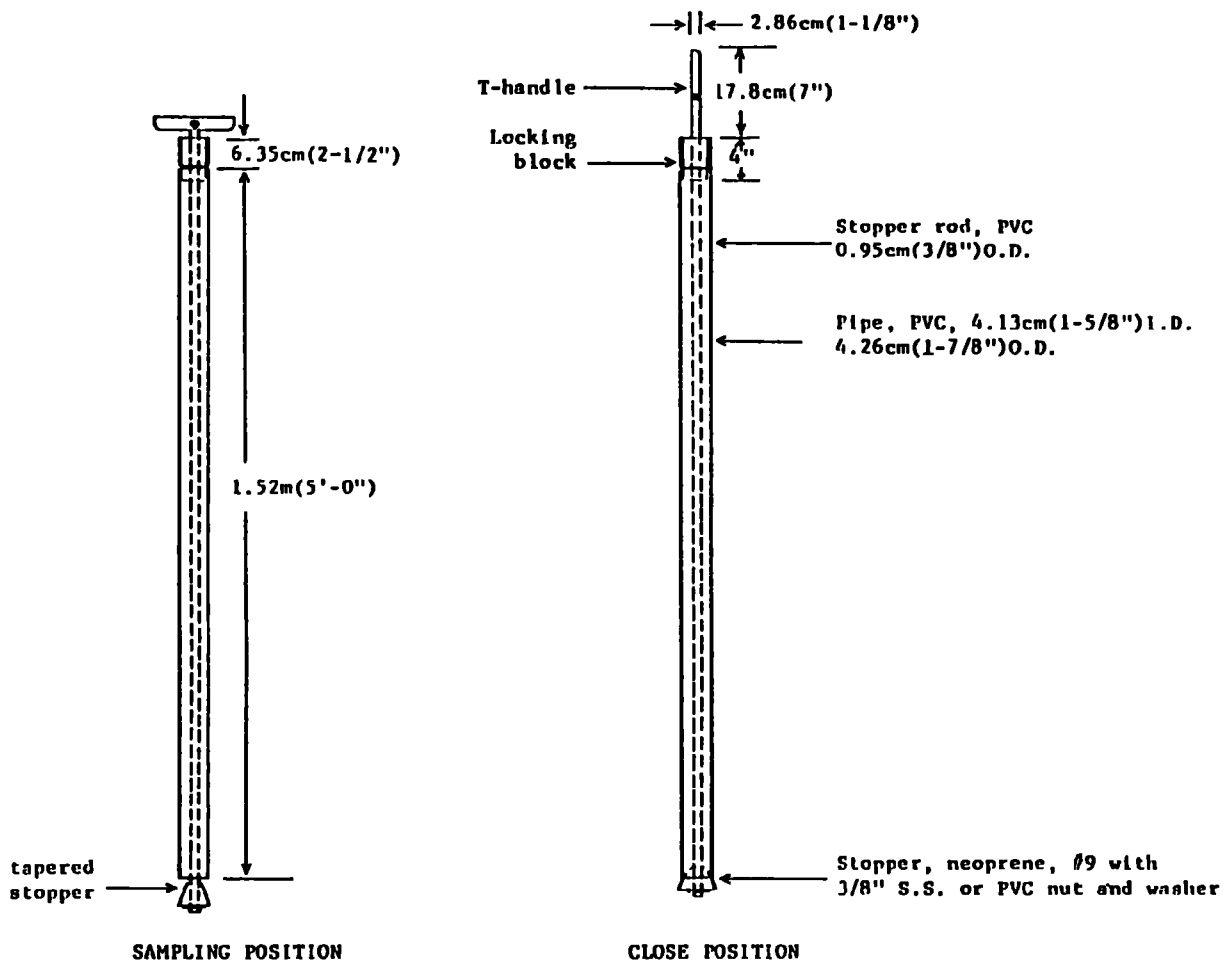

Figure A-2. Composite liquid waste sampler (COLIWASA).
(Modified from deVera, et al., 1980)

- Introduce the sampler carefully into the waste storage vessel, maintaining the sampler in a vertical attitude. Lower the sampler slowly to allow liquid levels within and outside the sampling tube to equilibrate as the sampler approaches the greatest depth of sampling. This is necessary to allow the taking of representative samples, especially with more viscous liquids.

- When the sampler contacts the bottom of the waste storage vessel, or when all but 6 inches of the sampler is immersed, pull upward on the handle and turn it until one end rests firmly on the locking block.

- Withdraw the sampler with one hand and carefully wipe the outside of the tube with a reinforced fiber paper towel in the other hand; the second person may have to do this.

- Place the sampler directly above the sample container and slowly open the T-handle to release the sample through the bottom and into the sample container.

- Close the sample container, record all information in the logbook and on appropriate forms, and attach the proper labels and seals to the sample container.

- Immediately clean the sampler. Recommended cleaning precedures include use of a large, long-handled "bottle brush" which snugly fits the inside of the COLIWASA tube. In turn, the sampler is washed with an organic solvent, e.g., hexane, and detergent solution, and flushed with water. Any oily sample residues should be wiped off (e.g., with fiber reinforced paper towels) <u>before</u> initiating the wash/rinse sequence.

APPENDIX 2

PROTOCOL FOR CONDUCTING EXTRACTION PROCEDURE TO IDENTIFY HAZARDOUS WASTE

This is a summary of the protocol followed in the evaluation of the extraction procedure for identification of hazardous waste. A flow chart for this protocol is given in Figure 1 in the text.

Safety Note

Laboratory personnel are required to wear safety glasses, rubber or vinyl gloves, a lab coat or coveralls and safety shoes or rubber boots when handling hazardous waste samples. Respirators are to be worn when there is a possible hazard due to toxic gases or vapors from the sample. All contaminated dry waste materials (excess samples of dry waste, paper towels, disposable beakers, etc.) are to be sealed in plastic bags and placed in cardboard boxes for proper disposal. Used solvents and other contaminated liquid wastes are to be sealed in metal, glass, or plastic containers, as appropriate, and stored in a closed hood or sealed drum (in a restricted area) until disposal. All waste containers are to be labeled "Hazardous Waste" and must include the type of waste, the date, and the worker's initials on the label. All hazardous wastes are to be disposed of by a commercial contractor at a disposal facility approved for such wastes.

Treatment Prior to Extraction

Triplicate aliquots (100 grams each) of each waste sample are separated into solid and liquid phases by filtration. If the sample is a liquid but cannot be filtered through a 0.45 micron filter, it is centrifuged to obtain phase separation. If neither filtration nor centrifugation will separate the material into solid and liquid phases, the sample is treated as a solid.

Weight Determinations

The filters to be used for the filtration step are not removed from their packaging until they are weighed to determine their tare. They are then stored on clean watch glasses or in petri dishes until they are used for filtration of the sample. The analytical balances used to weigh the filters are calibrated monthly with standard weights and are checked with a standard 100-mg weight just before each weighing. The date and results of the calibration are recorded in the balance logbook. An annual calibration with

standard weights traceable to the National Bureau of Standards is performed when the balances are cleaned and serviced. The EPA property number of the balance is recorded in the laboratory notebook with the data obtained with that balance.

Filtration Method

All filtrations are performed in a fume hood to protect the operator from any toxic vapors that may emanate from the sample. A Nuclepore filter holder (Nuclepore Corp., Pleasanton, CA 94566) equipped with a 1.5 liter reservoir is used for the filtration in the following steps:

1. Place a weighed glass fiber pre-filter (124 mm diameter, Millipore AP 25124, Nuclepore P040, or equivalent) and a weighed 0.45 micron filter membrane (Millipore type HAWP 142, Nuclepore type 112007, or equivalent) in the filter holder with the pre-filter on top (upstream).

2. Add the sample (known weight) to the reservoir. Seal the reservoir and pressurize it with argon to a maximum of 75 psi. Continue the filtration until less than 5 ml of liquid is released during a 30 minute period. The sample may not require the maximum pressure for filtration; however, for some dense samples the reservoir must be held at 75 psi before the sample is identified as non-filterable.

3. After liquid flow stops, depressurize and open the top of the reservoir. Remove the filters and solid sample and place in a petri dish or other suitable container. Repeat steps 2 and 3 if the sample size exceeds the capacity of the reservoir.

4. Store the liquid fraction at 1-5°C for later addition to the extract.

5. Weigh the filtered solid sample (filters included) to determine the weight of the solid material collected (i.e. subtract tare weights of filters from total sample weight). Extract the filtered sample (solid material a filters) by the extraction procedure.

6. If the sample does not filter, use the centrifugation method to separate the solid and liquid phases.

Centrifugation Method

An International Centrifuge, size 2, model K (International Equipment Company, Boston, Mass.) is used for the centrifugation in the following steps:

1. Centrifuge the sample for 30 minutes at 2300 rpm under controlled temperature (20 to 40°C).

2. Measure the size of the liquid and solid layers to the nearest mm (0.04 inch) and calculate the liquid-to-solid ratio.

3. Repeat steps 1 and 2 until the liquid-to-solid ratios for two consecutive 30-minute centrifugations agree within 3 percent.

4. Decant or siphon off the liquid layers and extract the solid by the extraction procedure. Store the liquid fraction at 1-5°C for use in the extraction procedure.

Extraction Procedure (EP)

The solid material, obtained by the filtration or centrifugation method from liquid samples or as an aliquot from solid samples, must be able to pass through a 9.5 mm (3/8") standard sieve. If the sample will not pass through a 9.5 mm sieve it must be ground to size or must be subjected to the structural integrity procedure (Federal Register, Vol. 43, No. 243, Dec. 18, 1978).

The extraction procedure is performed in the following steps:

1. Weigh the solid material obtained from the waste sample and place it in an extractor as identified in the proposed regulation. A suitable extractor will keep the solids in suspension in the extracting solution so that sample surfaces are continuously brought into contact with well-mixed extracting solution. With the exception of special studies, either the blade or tumbling type extractor was used for this program.

2. Add to the extractor a weight of deionized water equal to 16 times the weight of solid material added to the extractor.

3. Agitate the sample at 40 rpm and adjust the pH of the solution to 5.0 ± 0.2 with 0.5N acetic acid. Maintain the pH at 5.0 ± 0.2 and continue agitation for 24 hours. Do not add more than 4 ml of acid for each gram of solid. If the solution pH is less than 5, do not add any acid during the extraction. Maintain the temperature of the solution at 20-40°C during the extraction. Follow the procedure for manual pH adjustment in the proposed regulations.

4. Measure and record the pH at the end of the 24-hour extraction period.

5. At the end of the 24-hour extraction period separate the liquid and solid fractions of the extraction material by the filtration method described above. Adjust the volume of the resulting liquid phase with deionized water so that its volume is 20 times that occupied by a quantity of water at 4°C equal in weight to the initial quantity of solid material placed in the extractor.*

* Note - Beginning with the municipal sludge sample study -- the last study addressed in this report -- the filtered solid samples (filter cakes) are no longer dried to constant weight prior to extraction. A separate aliquot is now used to determine percent filtrable solids content of the waste. The aliquots to be extracted are simply filtered until all excess moisture is removed and then either extracted immediately or stored in petri dishes to maintain their moist condition until extraction.

6. Combine this solution with the original liquid phase obtained in the filtration or centrifugation step. Mix thoroughly and split the combined solution into two equal samples. Store one sample in glass under refrigeration at 1-5°C for organic analysis. Preserve the second sample for elemental analysis by addition of Ultrex nitric acid to reduce the sample pH to less than 2.

Analysis

The samples obtained by the extraction procedure are analyzed in accordance with the methods given in the proposed regulations. All samples should be analyzed as soon as possible after extraction.

APPENDIX 3.

WILLIAMS/BECKERT DRUM AND TANK (DAT) SAMPLER

DRUM AND TANK (DAT) SAMPLER

Use of DAT Sampler

The following steps describe the use of the DAT Sampler:

1. Support frame (Figure A-3) is inserted into the drum or tank to be sampled and slowly lowered to the desired depth (usually the bottom).

2. After a short delay -- 10 to 30 seconds, depending on the viscosity of the material being sampled -- the collection tube is inserted into the support frame and pushed down slowly until it slips over the O-ring in the frame base. The sample thus trapped is representative of the full liquid column (surface to bottom or base of sampler) sampled.

3. The support frame, collection tube and sample are removed as a unit from the drum or tank. Wipe with rag.

4. The bottom of the sampler is next inserted into the mouth of a wide-mouth collection jar. The contents are then released into the jar from the bottom of the sampler by carefully lifting the collection tube free of the O-ring in the support frame base.

5. Discard disposable collection tube; remove O-ring; wash base (still assembled) with detergent solution and rinse with acetone, then distilled water. Either replace O-ring with new one, or wash and rinse (detergent solution, then acetone, distilled water) old O-ring and replace on base.

Assembly of DAT Sampler Support Frame

For the 4-foot drum-sampling configuration (Figure A-3) each of the three 4-foot support tubes are threaded securely onto studs in the sampler base. The "male" end of each tube is inserted through one of three 1/4-inch holes in the top flange. A stainless cap nut is threaded onto the end of each of the tubes to secure them to the top flange.

To obtain the 6-foot sampler configuration, directly replace the 4-foot support tubes with their 6-foot counterparts.

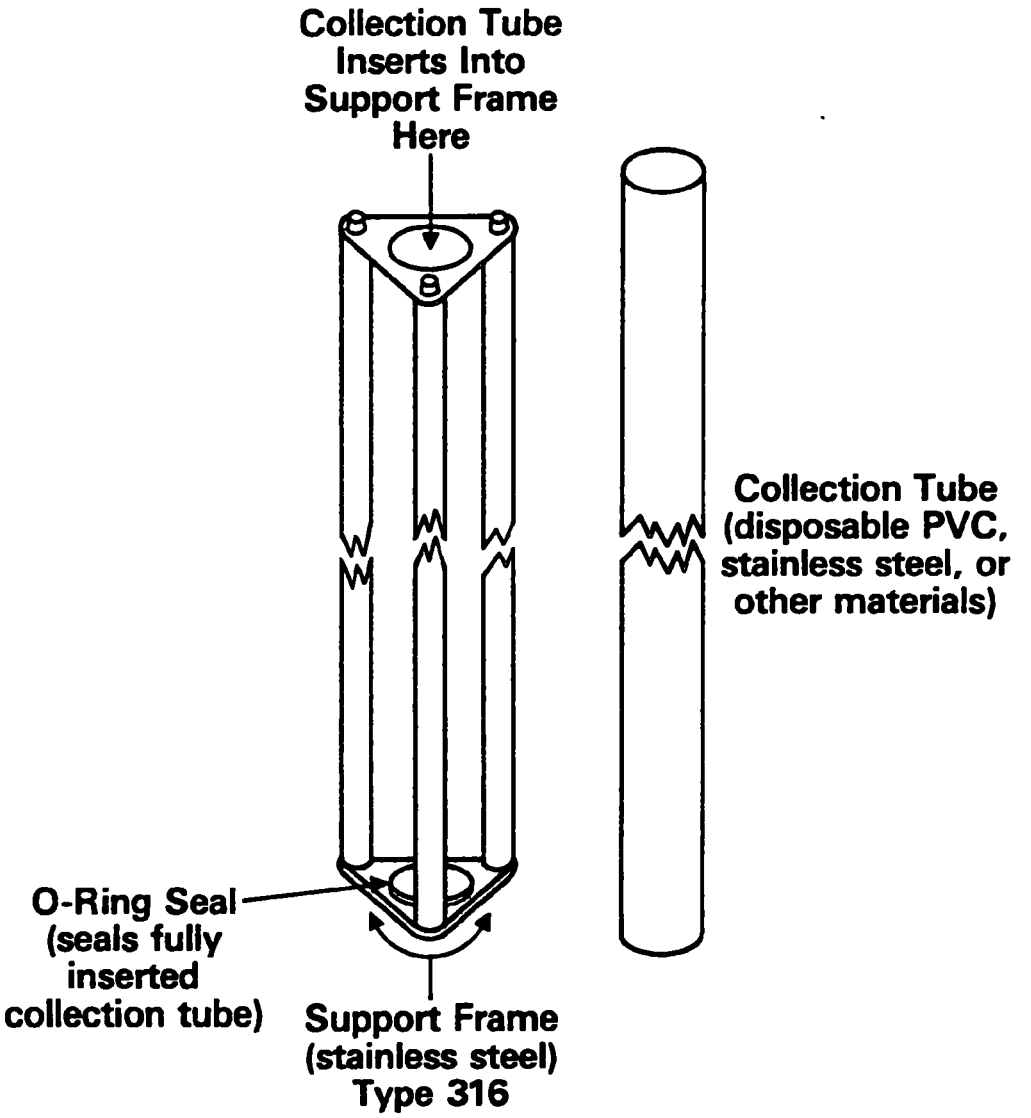

Figure A-3. Williams/Beckert Drum and Tank (DAT) Sampler in drum sampling configuration.

To assemble a frame that will support uncut 10-foot PVC collection tubes, remove the cap nuts from top of the 4-foot support frame (but leave the existing top flange) and, in place of the cap nuts, thread on the 6-foot extension tubes. Add a new top flange over the male ends of the extension tubes and secure with the cap nuts removed earlier. If the original top flange is deleted in assembling the 10-foot configuration, the resulting support frame will not have adequate strength.

Advantages of the DAT Sampler

The design of the DAT Sampler offers the following advantages:

- Support frame is constructed entirely of corrosion resistant materials (Type 316 stainless steel).
- Choice of sampling tube materials includes inexpensive, disposable PVC pipe readily obtainable from local sources, and reuseable stainless steel or other tubing for specific sampling requirements.
- Samples to within approximately 1 cm of the bottom of a waste container to yield a sample representative of the full liquid column (top to bottom).
- Extension tubes for support frame -- when used with collection tubes of various lengths -- give flexibility for sampling from shallow (drum) and deeper (tanks, vacuum trucks) waste containers.
- Lightweight, take-down design of support frame stores compactly, cleans and transports easily.
- Accurate, positive closure is obtained with O-ring seal and collection tube guidance system.
- Sample size is convenient for compositing representative samples from multiple waste containers.
- The combination of low cost, disposable collection tube and O-ring design eliminates cross-contamination of samples and minimizes on-site cleaning requirements.
- Virtually any liquid waste that can be safely exposed can be sampled with some combination of collection tube length and material.
- Triangular support frame configuration is more easily passed through out-of-round or damaged drum openings.
- Support frame can be grounded to steel drums or tanks where accumulation of explosive vapors is suspected.
- Sampler is simple in design and should be easy to operate even when suited in full protective clothing.

- The lightweight, thin-walled collection tubes are smooth, unobstructed, and easy to control and therefore cause minimum disruption of sample stratification when inserted.