EPA-600/2-77-023b
February 1977

Environmental Protection Technology Series

INDUSTRIAL PROCESS PROFILES FOR ENVIRONMENTAL USE: Chapter 2. Oil and Gas Production Industry

Industrial Environmental Research Laboratory
Office of Research and Development
U.S. Environmental Protection Agency
Cincinnati, Ohio 45268

RESEARCH REPORTING SERIES

Research reports of the Office of Research and Development, U.S. Environmental Protection Agency, have been grouped into five series. These five broad categories were established to facilitate further development and application of environmental technology. Elimination of traditional grouping was consciously planned to foster technology transfer and a maximum interface in related fields. The five series are:

1. Environmental Health Effects Research
2. Environmental Protection Technology
3. Ecological Research
4. Environmental Monitoring
5. Socioeconomic Environmental Studies

This report has been assigned to the ENVIRONMENTAL PROTECTION TECHNOLOGY series. This series describes research performed to develop and demonstrate instrumentation, equipment, and methodology to repair or prevent environmental degradation from point and non-point sources of pollution. This work provides the new or improved technology required for the control and treatment of pollution sources to meet environmental quality standards.

This document is available to the public through the National Technical Information Service, Springfield, Virginia 22161.

EPA-600/2-77-023b
February 1977

INDUSTRIAL PROCESS PROFILES FOR ENVIRONMENTAL USE

CHAPTER 2

OIL AND GAS PRODUCTION INDUSTRY

by

Glynda E. Wilkins
Radian Corporation
Austin, Texas 78766

Contract NO. 68-02-1319

Project Officer

Alfred B. Craig
Metals and Inorganic Chemicals Branch
Industrial Environmental Research Laboratory
Cincinnati, Ohio 45268

INDUSTRIAL ENVIRONMENTAL RESEARCH LABORATORY
OFFICE OF RESEARCH AND DEVELOPMENT
U.S. ENVIRONMENTAL PROTECTION AGENCY
CINCINNATI, OHIO 45268

DISCLAIMER

This report has been reviewed by the Industrial Environmental Research Laboratory - Cincinnati, U.S. Environmental Protection Agency, and approved for publication. Approval does not signify that the contents necessarily reflect the views and policies of the U.S. Environmental Protection Agency, nor does mention of trade names or commercial products constitute endorsement or recommendation for use.

ACKNOWLEDGEMENTS

This chapter was prepared for EPA by Radian Corporation under Contract No. 68-02-1319, Task 42. Glynda E. Wilkins was the author. Significant contributions were also made by Tommy D. Raye, Larry D. Short, and Teresa Sipes. Program administration was directed by Eugene C. Cavanaugh.

Helpful review comments from James H. Gary were received and incorporated into this chapter.

TABLE OF CONTENTS

CHAPTER 2

	Page
INDUSTRY DESCRIPTION	1
Products	3
Companies	3
Environmental Impact	4
Bibliography	5
INDUSTRY ANALYSIS	6
Exploration and Site Preparation	7
Process No. 1. Exploration	8
Process No. 2. Site Preparation	10
Well Drilling and Completion	12
Process No. 3. Drilling	13
Process No. 4. Mud Circulation	16
Process No. 5. Format Evaluation	19
Process No. 6. Well Completion	21
Crude Processing	24
Process No. 7. Water Removal	25
Process No. 8. Gas-Oil Separation	28
Process No. 9. Crude Storage	30
Natural Gas Processing	32
Process No. 10. Liquid Hydrocarbon Recovery	34
Process No. 11. Acid Gas Removal	37
Process No. 12. Sulfur Recovery	39
Process No. 13. Dehydration	41
Process No. 14. Production Separation	43
Process No. 15. LPG Storage	46
Process No. 16. Gasoline Storage	48

TABLE OF CONTENTS (Cont.)

Page

Secondary and Tertiary Recovery Techniques. 50

Process No. 17. Displacement 51

Process No. 18. Fracturing 53

Process No. 19. Acid Treatment 55

Process No. 20. Thermal Treatment. 57

Appendix A - Characteristics of U. S. Crude Oils. 59

Appendix B - Geographical Location of Oil and Gas Production Activities. 79

Appendix C - Partial Listing of Domestic Producers. 99

Appendix D - Materials for Drilling Fluid Systems 115

LIST OF FIGURES

CHAPTER 2

Figure		Page
1	The Oil and Gas Production Industry.	2
2	Crude Processing	24
3	Natural Gas Processing	33

LIST OF TABLES

CHAPTER 2

Table		Page
1	Yearly Volumes of Acids Used for Well Treatment.	22
2	Disposition of Waste Brine	26
3	Hydrocarbon Emission Factors for Crude Storage	30
4	Hydrocarbon Emission Factors for Gasoline Storage.	48
A-1	Properties of United States Crude Oils	60
A-2	Trace Element Content of United States Crude Oils.	67
A-3	Sulfur and Nitrogen Content of the Giant U. S. Oil Fields. .	72
B-1	Production of Crude Oil and Lease Condensate by States, 1973	80
B-2	Production of Natural Gas by States, 1973.	82
B-3	Location of Large Domestic Oilfields	84
B-4	Natural Gas Processing Plants in the United States, January, 1972.	90
B-5	Wells Drilled in the U. S.	97
C-1	Partial Listing of Domestic Producers.	100
D-1	Materials for Drilling Fluid Systems	116

OIL AND GAS PRODUCTION INDUSTRY

INDUSTRY DESCRIPTION

The oil and gas production industry is involved in locating and retrieving oil and gas from underground formations and preparing the well streams for use by consumers or refiners. Production activities begin with exploration and end with storage or sales.

The industry has been divided into five segments for consideration.

(1) Exploration and Site Preparation - This segment includes those operations necessary for selection and preparation of a drilling site.

(2) Drilling - The drilling segment is comprised of all operations involved in digging a well and preparing it for production.

(3) Crude Processing - Several process modules are described for preparing crude for refinery use.

(4) Natural Gas Processing - This segment includes widely used processes for preparing natural gas for sales.

(5) Secondary or Tertiary Recovery - Methods for stimulating well production are included in this segment.

Figure 1 is a schematic representation of the industry segments and their interrelationships.

Process descriptions have been prepared for all necessary operations involved in each segment, but flowsheets were deemed appropriate in only two segments: Crude Processing and Natural Gas Processing.

The petroleum production industry is very large and diverse. On December 31, 1973, there were 497,378 producing oil wells and 124,168 producing gas wells in the U.S. Industry figures indicated that 1,460,000 cubic meters (9,209,000 barrels) of crude and lease condensate and 1,867 million cubic meters (65,940 million cubic feet) of natural gas were produced daily. The drilling segment of the industry completed 33,373 oil wells, gas wells, dry holes, and service wells in 1974. The entire industry employed 291,900 people in 1974.

Crude oil and natural gas are produced in 32 states of the U.S., but Louisiana, Texas, California, and Oklahoma accounted for 79 percent of the domestic crude production in 1973. Of the domestic gas production for 1973, Louisiana and Texas accounted for 74 percent. Drilling activities in 1974 were centered in California, Louisiana, Kansas, Oklahoma, and Texas with 64 percent of the total wells drilled in those states. Appendix B contains several correlations of production data with geographical location. Included are tables of production by state; gas plants, locations and throughput; locations of the largest oil fields in the U.S.; and drilling data presented by state.

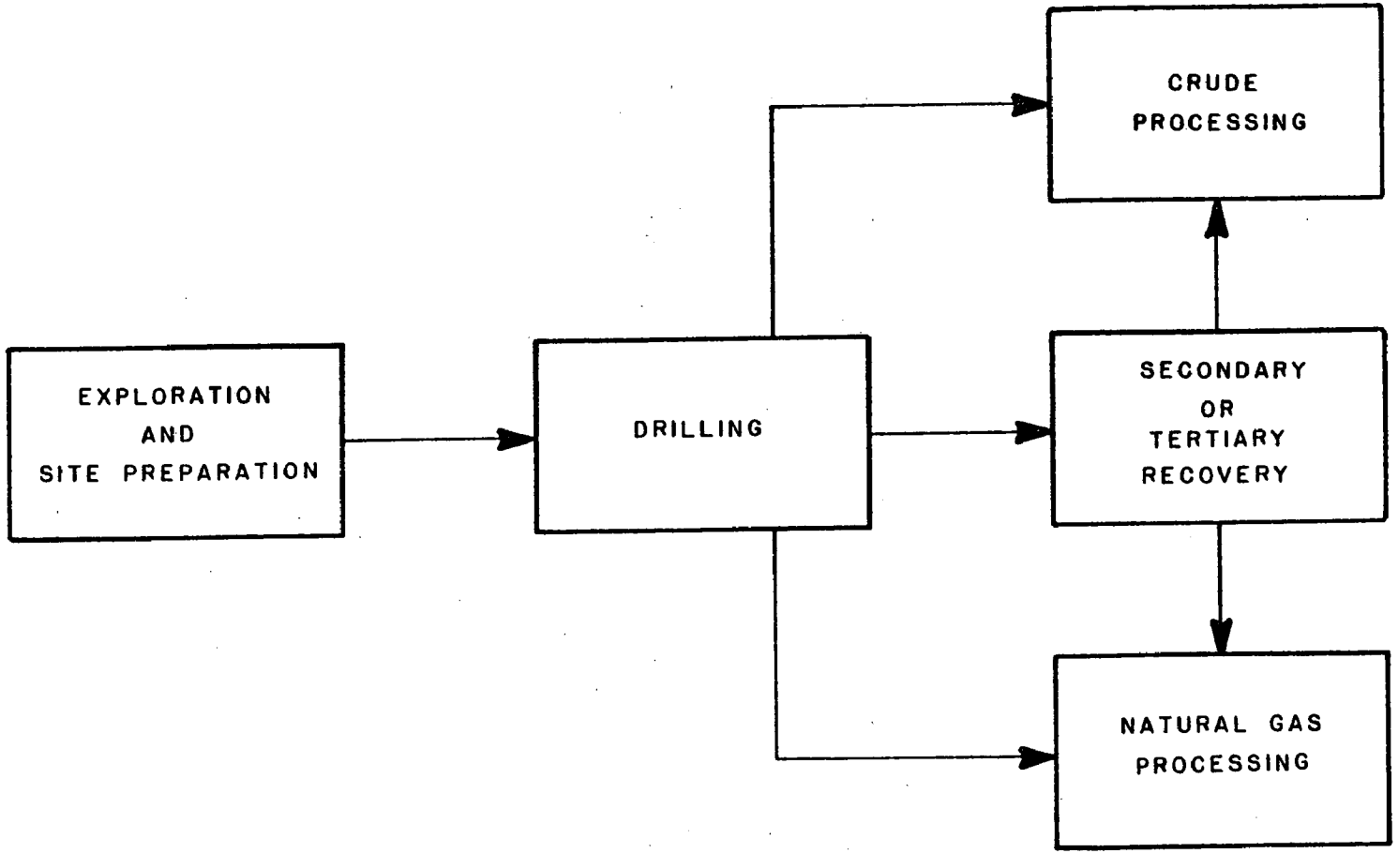
EXPLORATION
AND
SITE PREPARATION
DRILLING
CRUDE
PROCESSING
SECONDARY
OR
TERTIARY
RECOVERY
NATURAL GAS
PROCESSING

The high growth trends established by the petroleum industry in the late 1960's and early 1970's have been interrupted and are still fluctuating. Although predicting the future at this time is a difficult task, it appears that for the near future U. S. crude production will be declining 2 to 3% yearly while domestic petroleum demands and refining capacity will be increasing 2 to 3%. Natural gas production became almost constant in the 1970's, and the trend in gas processing has been toward fewer processing facilities with larger capacities. Despite staggering costs involved in drilling wells, drilling operations have seen a sharp increase since 1971. The limiting factor in drilling activities in the next few years is expected to be the availability of rotary rigs.

Products

Crude oil is composed chiefly of hydrocarbons (paraffins, naphthenes, and aromatics) in a typical carbon to hydrogen ratio between 6 and 8 together with small amounts of trace elements and organic compounds containing sulfur, nitrogen, and oxygen. The appearance and consistency of crude is determined by the molecular types and sizes of hydrocarbon present. Common colors are green, brown, black, and occasionally light yellow. Specific gravities are usually 0.80 to 0.95; viscosities of most crudes range from 0.023 to 0.23 stokes at 38°C. Appendix A contains chemical analyses and physical properties of some domestic crude productions. A typical domestic crude contains 83-85% carbon, 11-14% hydrogen, 0.05-2% sulfur, 0.1-2% nitrogen and 0.2% oxygen.

Natural gas is about 95% saturated hydrocarbons. The principal hydrocarbon is methane. Also present, in decreasing proportions, are ethane, propane, butanes, pentanes, hexanes, and heptanes. The remaining 5% is usually nitrogen, carbon dioxide, and sometimes hydrogen sulfide and helium. After being processed to remove the natural gas liquids, the natural gas becomes dry natural gas and consists chiefly of methane. The heavier hydrocarbons are separated and/or liquefied to become ethane, propane (LPG), butanes, and natural gasoline.

Companies

Some of the companies involved in oil production engage in only one facet of the industry and are known as nonintegrated companies. Those companies that are involved in all phases of the petroleum industry are called integrated companies. In between are the semi-integrated companies that engage in two or more types of operation.

Another often used classification system is division into two classes: majors and independents. The differentiation is rather vague, so that a strict definition is impossible. Most independents are of modest resources and are nonintegrated. There are some integrated companies with large international holdings that consider themselves independents, however.

The independents are extremely important to oil and gas production, as they are responsible for drilling nearly 80 percent of the producing, domestic wells.

A list of oil and gas producers proved unavailable and impractical, as there are over 9,000 crude oil producers alone. To add to the problem, the production industry is very fluid; companies appear and disappear rapidly due to mergers and acquisitions. Appendix C contains a listing of integrated companies and some of the large independents in the U. S. with production data (when available) and office locations.

Environmental Impact

The major waste streams encountered in the oil and gas production industry contain hydrocarbons, oily brine, sulfides and other sulfur compounds, and glycols.

Blowouts during drilling operations may cause hydrocarbon emissions to air, land, and water. Offshore operations also contend with the danger of storms and shipping accidents causing uncontrolled flow from producing wells. Technology is constantly improving the situation, however, and is decreasing the potential threat of uncontrolled flow or blowouts.

Gaseous hydrocarbon emissions are significant environmental problems in the industry. Storage tank breathing and filling losses; fugitive leaks in valves, vents, pumps, pipes, and vessels; and vented natural gas in remote locations contribute to the emission problem. However, the increased prices of hydrocarbons are making prevention of their loss more economically attractive, and this pollution problem should be decreasing in the near future.

Atmospheric emissions of gases other than hydrocarbon gases are also encountered in oil and gas production. In producing sour crudes or gases hydrogen sulfide emissions may occur from fugitive sources, and other sulfur compounds may be emitted in the tail gas from sulfur recovery units or from flaring sulfide gases. The quantities of sulfur emitted as sulfides or as oxides of sulfur are not well defined at this time. The problem is addressed in Reference 12, but the variability of sulfur concentrations in the well productions and the inconsistencies in reporting procedures seem to have prevented any reliable estimates of nationwide emissions. Large steam or waste water streams contaminated with glycols are also encountered in the natural gas processing segments.

A huge waste water stream is a by-product of oil and gas production. Disposal of large quantities of brines produced with oil and gas presents a problem of great magnitude. The brine presents a threat to fresh water supplies, and the associated oil presents a threat to water, land, and air. References 7 and 8 are EPA funded documents which treat the problem of brine disposal in the oil industry in depth.

Another source of environmental concern is the contamination of aquifer zones by drilling fluids, brines, or hydrocarbons in secondary recovery and drilling operations.

Bibliography

(1) Annual Statistical Review, Petroleum Industry Statistics, 1965-1974, Washington, D. C., American Petroleum Institute, 1975.

(2) "Forecast/Review, An Oil and Gas Journal Special Report", Oil and Gas Journ. 73 (4), 103-118 (1975).

(3) Chilingar, George V. and Carrol M. Beeson, eds., Surface Operations in Petroleum Production, New York, American Elsevier Publishing Co., Inc., 1969.

(4) An Appraisal of the Petroleum Industry of the United States, PB188865, Washington, D. C., United States Department of the Interior, 1965.

(5) Environmental Conservation, Vol. II, Washington, D. C., The National Petroleum Council, 1972.

(6) Radian Corporation, Study on Control of Hydrocarbon Emissions from Petroleum Liquids, EPA Contract No. 68-02-1319, Task 12, Austin, Texas, 1975.

(7) Reid, George W., et al., Brine Disposal Treatment Practices Relating to the Oil Production Industry, EPA 660/2-74-037, Norman, Oklahoma, 1974.

(8) Reid, George W. and Leale E. Streebin, Evaluation of Waste Waters from Petroleum and Coal Processing, EPA R2-72-001, Ada, Oklahoma, 1972.

(9) "Independents Widen Lead in U. S. Oil and Gas Search", Oil and Gas Journal, 72 (26), 11-15 (1974).

(10) Kantor, Richard H., Trace Pollutants from Petroleum and Natural Gas Processing, EPA Contract No. 68-02-1308, Task 8, Houston, Texas, 1974.

(11) Bland, William F. and Robert L. Davidson, eds., Petroleum Processing Handbook, New York, McGraw-Hill, 1967.

(12) Ecology Audits, Inc., Sulfur Compound Emissions of the Petroleum Production Industry, EPA Publication No. 650/2-75-030, Dallas, Texas, 1974.

INDUSTRY ANALYSIS

The oil and gas production industry is discussed in five segments: (1) Exploration and Site Preparation, (2) Drilling, (3) Crude Processing, (4) Natural Gas Processing, and (5) Secondary and Tertiary Recovery. The discussion of the above five segments includes process descriptions of the various processing steps used in producing and preparing crude, natural gas liquids, and natural gas for use by consumers or refineries.

An attempt was made to present the process steps in sequence. The problem encountered in the Crude Processing and Natural Gas Processing segments was the diversity of the operations involved. The sequences of processing steps are not at all the same from place to place; moreover, some processes may be absent and additional processes present to deal with the local conditions and composition of the production. This catalog entry cannot be considered an all-encompassing survey, but only a summary of some of the most commonly used methods in domestic production.

Within each process description data have been presented on operating parameters, utility requirements, input materials, and waste streams when they were applicable and available. Input materials were confined to chemical substances added; items such as drill bits and drill pipes were disregarded. Operating parameters include process variables and do not include such things as downhole temperatures. Waste streams have been indicated even when no quantitative data were found. Information and data were taken from authoritative sources and are considered reliable and accurate. Process flowsheets have been provided for Crude Processing and Natural Gas Processing, but were considered inappropriate for the other segments.

EXPLORATION AND SITE PREPARATION

Process descriptions for the two modules (1) Exploration and (2) Site Preparation are presented in this segment. A large portion of the total oil and gas production budget goes into these acitivites which are becoming increasingly necessary and more expensive each year as the industry is forced to produce oil from more remote or inaccessible formations.

Exploration

1. Function - The objective of oil exploration procedures is defining and describing geological structures which are often associated with oil accumulation in the earth's crust.

   Geological surveys of the surface are made using aerial photographs, satellite photographs, and mappings of surface outcrops. Offshore geological surveys include mapping of the bottom using acoustic sounding methods and bottom sampling. Core sampling is performed in both onshore and offshore operations.

   Subsurface geological surveys are made by geophysical methods. Seismic methods, the most widely used of the geophysical methods, yield information about the times required for shock waves to travel through rock formations. These data help characterize the subsurface strata with respect to the depth and nature of the formations. The monitored shock waves are generated by explosive charges set at or near the surface or by dropping a 2700 kg (6000 lb.) steel slab 3 meters (nine feet) to the ground (thumping).

   Offshore seismic operations generate shock waves to penetrate the earth's crust in a variety of ways. The traditional source was dynamite, but today electric discharges, encapsulated explosives, gas guns, and electromechanical and mechanical transducers are used. In marine geophysical surveys the sources and receivers are operated over the side of or close behind a ship.

   Gravimetric methods depend on the measurements of slight variations in the force of gravity on the surface of the earth or ocean floor. Magnetic methods measure local variations in the intensity of the earth's magnetic field. These measurements may give indications of the depth and nature of subsurface rock formations.

2. Input Materials - Not applicable

3. Operating Parameters - Not applicable

4. Utilities - Very small energy usage

5. Waste Streams - There is a minimal danger of pollution due to a blowout during core drilling operations when a shallow pocket of gas or oil is encountered.

Uncased seismic shot holes can cause pollution of shallow freshwater streams. Strong shock waves generated offshore by explosives have resulted in killing fish.

On the whole, this part of the industry has little chance for pollution.

6. EPA Source Classification Code - None exists

7. References -

(1) Environmental Conservation. The Oil and Gas Industries, Vol. II, Washington, D. C., The National Petroleum Council, 1972.

(2) The Petroleum Handbook, London, Shell International Petroleum Company Limited, 1966.

(3) Petroleum Extension Service Industrial and Business Training Bureau, A Primer of Oil Well Drilling, 3rd. ed., Austin, Texas, 1970.

Site Preparation

1. Function - Site preparation activites include those operations necessary to prepare the drilling site and "rig-up" the equipment. The operations are necessarily different for onshore and offshore locations and will be dictated somewhat by local conditions.

   For land operations earth-moving machinery clears, grades, and levels the site. Earthen pits are dug for circulating fluid and for waste, and access roads are built and surfaced with a variety of materials including caliche, oyster shells, or wooden timbers. Water must be furnished to the site by digging water wells or installing pumps and water lines. The drilling rig may be transported overland on skids almost completely assembled, or if the distance is great and/or the terrain is rough, the rig must be dismantled and hauled to the site on heavy trucks. Remote drilling locations may require transport of rig pieces by air freight or by helicopter. The derrick is usually of the cantilevered type and is raised into position after being assembled horizontally using power from the drawworks. Connections are made for the pumps, mud tanks, and pipe lines and the crown block, hoisting line, and travelling block are installed. Auxiliary equipment is installed and the mouse and rat holes are dug before drilling can begin.

   Preparations for drilling offshore differ widely because of the many types of rigs available. The drilling rigs may be floating or fixed in place on the ocean floor. They may be self-contained, or they may require barge tenders which contain the auxiliary components necessary to the drilling derrick. In all cases the pumps, pipelines, and machinery must be connected, and in the case of submersible rigs the platform must be settled firmly on the bottom. For disassembled rigs "rigging-up" may require large barges with hoisting capacities of 450 metric tons (500 tons) to raise the derrick and to prepare the rig for drilling.

2. Input Materials - Not applicable

3. Operating Parameters - Not applicable

4. Utilities - Fuel required for earth-moving and transportation equipment

5. Waste Streams - Top soil may be eroded from land operations where earth-moving machinery has removed vegetation.

6. EPA Source Classification Code - None exists

7. References -

(1) Petroleum Extension Service Industrial and Business Training Bureau, A Primer of Oil Well Drilling, 3rd. ed., Austin, Texas, 1970.

(2) Environmental Conservation. The Oil and Gas Industries, Vol. II, Washington, D. C., The National Petroleum Council, 1972.

(3) The Petroleum Handbook, London, Shell International Petroleum Company Limited, 1966.

WELL DRILLING AND COMPLETION

The segment of the oil industry concerned with drilling and completing an oil well includes all of those operations necessary to digging the hole and readying it for production.

There are four main processes involved in this segment. Drilling is the process of actually cutting through the earth's crust to form a hole. Mud circulation is a facilitative process which aids in drilling and provides a safety measure against blowouts. Formation evaluation concerns gathering data about the formations being penetrated and assessing their commercial value. Well completion includes those steps necessary to prepare the drilled hole for production.

Drilling

1. Function - Drilling is the process of actually cutting through the earth's crust to form a well and is accomplished by rotating and hoisting operations performed at the derrick. The cutting and grinding through the earth's surface is accomplished by rotating the drilling string with the required weight on the drill bit affixed to the end of the drill string. Additional lengths of drill pipe are attached as the drilling proceeds. When a worn drill bit has to be replaced, the entire string of pipe must be hoisted. The pipe lengths are removed as the string is slowly raised until the drill bit is brought to the surface and changed out. The new bit and the drill string are slowly lowered, and the lengths of pipe are replaced until the bottom is reached, at which time rotation begins again.

   The rotation equipment consists of a swivel which sustains the weight of the drilling string, permits rotation, and affords a passageway for circulation of drilling fluid; the kelly which transmits torque from the rotary to the drilling string, permits vertical movement of the string, and transmits drilling fluid down the string; the rotary table which drives the kelly bushing and accommodates tapered slips for holding pipe when making or breaking connections. The drill bit is on the end of the rotating string and is designed to break, dislodge, or fragment formation material. Different bits are available for different applications; they may be steel, carbide-tipped, or diamond tipped.

   Hoisting equipment consists of the drawworks, a crown block fixed at the top of the derrick, and a travelling block to which is attached a hook. The drawworks is a power hoist provided with a series of clutches, gearing systems, and braking systems to hoist and lower as much as 450 metric tons (500 tons) of weight in a controlled manner.

2. Input Materials - Not applicable

3. Operating Parameters - Not applicable

4. Utilities - Heavy duty rigs for deep wells require about 2200 kW (3000 hp) for rotation, hoisting, and circulation. The power is routinely supplied by diesel or gas engines.

5. Waste Streams -

- Cuttings - 168 m^3 (1059 barrels) of cuttings are generated in drilling a 4600 m (15,000 foot) hole 22 cm (8½ in.) in diameter. On land the cuttings are separated from the mud and discharged in waste pits. Offshore the cuttings may be dumped into the ocean if they are mixed with water-based muds. Those cuttings contaminated with oil-based muds or hydrocarbons from a formation may be treated to separate the oil before disposal in the sea, or the cuttings may be pumped into a barge for transport to shore when the waste is treated and discarded.

- Drilling fluid - Excess or contaminated mud is pumped into waste pits, into the ocean (when water-based mud is used), or into barges for transport to shore. Earthen mud pits are subject to a certain amount of leaching which may threaten fresh water zones. Mud may also escape into porous formations and into fresh water aquifers during drilling operations. Modern drilling operations employ techniques to protect fresh water aquifers; oil-based muds are not used while drilling these formations, and often casing will be set in that zone.

- Hydrocarbons - Oil brought to the surface with drilling mud is separated and disposed of in open pits or pumped into barges for onshore disposal. Excess oil-based muds are treated in the same manner. At any point that the oil is open to the air, atmospheric emissions result. Hydrocarbon gas brought to the surface with drilling fluid is separated from the mud and may be vented or flared at a safe distance from the drilling operation.

  Blowouts are considered a very serious hydrocarbon waste stream which may affect air, land, and water. Blowouts occurred in 106 of 273,000 wells drilled from 1960 through 1970 in eight states. Of 9000 wells drilled on the outer continental shelf, blowouts in 25 wells occurred. Along with the hydrocarbon emission to the land, air, and sea, there are dangers of a blowout establishing communication between the producing formation and a fresh water aquifer. Blowout prevention measures are practiced routinely throughout the industry. Drilling rigs are equipped with blowout preventers which can close a well in 15 seconds. Downhole pressures and mud circulation volumes are constantly monitored during drilling operations for indications of well fluid entering the hole. Drilling muds are weighted to keep the downhole pressure under control.

6. EPA Source Classification Code - None

(7) References -

(1) Environmental Conservation. The Oil and Gas Industries, Vol. II, Washington, D. C., The National Petroleum Council, 1972.

(2) The Petroleum Handbook, London, Shell International Petroleum Company Limited, 1966.

(3) Petroleum Extension Service Industrial and Business Training Bureau, A Primer of Oil Well Drillings, 3rd. ed., Austin, Texas, 1970.

(4) Rogers, Walter F., Composition and Properties of Oil Well Drilling Fluids, Houston, Texas, Gulf Publishing Company, 1963.

(5) Collins, Gene, "Oil and Gas Wells-Potential Polluters of the Environment?", J. of WPCF 43 (12), 2383-93 (1971).

Mud Circulation

1. Function - Drilling fluid is pumped through the drill pipe and drill bit to the bottom of the hole and returned to the surface through the annulus outside the drill bit during drilling operations. The purposes of the fluid are to remove cuttings made by the bit, to cool and lubricate the bit and drill string, to control formation pressure, to support and protect the wall of the hole, and to facilitate formation evaluation procedures.

   The drilling fluid is pumped under high pressure from a suction tank or pit, up a standpipe, through the rotary hose and swivel to the hollow kelly and drilling string. After leaving the drill bit, the fluid, carrying drilling cuttings, ascends through the space between the drill string and wall of the borehole. At the surface the fluid passes through shale shakers, desanders, desilters, and degassers to remove impurities. The mud then returns to the suction tank for recycling unless it is contaminated. Contaminated mud is jetted into reserve pits or barges along with cuttings, excess mud made by the hole, and other waste streams from the drilling site. In addition to the basic circulation equipment mentioned there are agitators for the tanks, mud weight and pit level indicating and recording devices, chemical testing and treating apparatus, and mud storage and handling facilities.

   The actual composition of the drilling fluid will vary with the formation being drilled and the activity on the drilling rig. Drilling fluids include gases, liquids, and solids suspended in liquids. The solids suspended in liquids type, the most widely used, consists of a colloidal suspension of clay in water, usually bentonite for fresh water and attapulgite for salt water. Suspensions of solids in oil and oil emulsions are also used, especially in drilling through formations that swell and slough in the presence of water. Chemicals of various types are used to further control the physical and chemical properties of the drilling fluid. The viscosity is adjusted with quebracho and tannin; the density is controlled with weighting agents, usually barite. When drilling through highly permeable formations, fibrous, flaky, or granular material may be added to stop mud circulation losses. A partial list of the substances used in drilling fluids includes lignosulfonates, calcium, chromium compounds, acrylonitriles, sodium salts of phosphoric acids, natural gums, dehydrated phosphates, subbituminous products, protocatechuic acid, lignins, sugar cane fibers, lime, ground nutshells, cotton seed hulls, cellophane flakes, corn starch, salt water, carboxymethyl-cellulose, crude oil, surfactants, soaps, lecithin, and asbestos. A list of some drilling fluids and their descriptions is included in Appendix D.

2. Input Materials - A well 2600 to 3500 m (8500 to 11,500 feet) deep will require 190 to 400 m^3 (1200 to 2500 barrels) of mud to circulate and fill the hole. This does not allow for volumes of chemical additions made as drilling progresses or for mud lost to porous formations. Chemical additions generally range from 20 to 140 kg (50 to 300 lb.) per day, but may go as high as 900 kg (2000 lb.) per day.

3. Operating Parameters - The minimum critical velocity is usually 37 to 55 meters per minute (120 to 180 feet per minute).

4. Utilities - A typical 41 cm (16 in.) mud pump for a heavy duty rig is driven by 750 kW (1000 hp). With an efficiency of 0.36 the pump requires 0.025 m^3 (6.50 gallons) of diesel per hour. Additional power is required for various smaller motors, pumps, and agitators involved in the mud circulation system.

5. Waste Streams -

   - Drilling fluid - Excess or contaminated mud is pumped into waste pits, into the ocean (when water-based mud is used), or into barges for transport to shore. Drilling mud may threaten fresh water zones by leaching from earthen pits and by escaping into porous formations during drilling operations. Modern drilling operations include practices to protect fresh water zones. Oil-based muds are not used while drilling these formations, and often casing will be set in that zone.

   - Hydrocarbons - Oil brought to the surface with drilling mud is separated and disposed of in open pits or pumped into barges for disposal onshore. Excess oil-based muds are treated in the same manner. At any point that the oil is open to the air, atmospheric emissions result.

     Hydrocarbon gas brought to the surface with drilling fluid is separated from the mud and may be vented or flared at a safe distance from the drilling operations.

6. EPA Source Classification Code - None

7. References -

(1) Petroleum Handbook, London, Shell International Petroleum Company Limited, 1966.

(2) Petroleum Extension Service Industrial and Business Training Bureau, A Primer of Oil Well Drilling, 3rd. ed., Austin, Texas, 1970.

(3) Environmental Conservation. The Oil and Gas Industries, Vol. II, Washington, D. C., The National Petroleum Council, 1972.

(4) Lynch, Edward J., Formation Evaluation, New York, Harper and Row, 1962.

(5) Rogers, Walter F., Composition and Properties of Oil Well Drilling Fluids, Houston, Texas, Gulf Publishing Company, 1963.

(6) Collins, Gene, "Oil and Gas Wells-Potential Polluters of the Environment?", J. of WPCF 43 (12), 2383-93 (1971).

Formation Evaluation

1. Function - Formation evaluation involves the use of tools and methods that are capable of locating producing formations and evaluating their commercial significance. There are two broad categories of formation evaluation methods: those used while drilling is in progress and those used after drilling or a portion of the drilling is completed. Core analysis and evaluation of drilling fluid and drill cuttings are in the first group, while wireline logging methods such as electric logging, radioactivity logging, and acoustic velocity logging are in the second category. Drill stem testing may be used in either classification.

   In coring the drill bit is replaced by a core barrel and a core head by means of which a cylinder of the formation being penetrated passes through the core head and into the core barrel where it is retained and brought to the surface. Sidewall coring is accomplished by shooting several hollow cylinders into the walls of the uncased hole. The cylinders are then pulled to the surface by steel wires attached to the carrier. The core samples are analyzed for porosity, permeability, and the saturation of oil, water, and gas.

   Evaluation of the drill cuttings and the drilling fluid involves continuous monitoring of these streams for traces of oil, gas, or saltwater.

   Wireline logging methods require that various special tools run into the well on multi-conductor wireline are placed in the well to study and evaluate the formation. These special devices may measure the electrical, magnetic, radioactive, or acoustic properties of the formations. The measured information is displayed continuously as a function of depth on a strip chart.

   If a formation looks promising, a drill stem test is made. Drill stem testing seeks to reproduce conditions existent in a producing well. A simplified description of the process is that a producing formation is sealed off with packers, and the formation is opened to the surface. Formation fluid then enters the drill pipe and is brought to the surface for evaluation.

   The data gathered from the formation evaluation processes will determine whether the casing is set and the well completed or plugged.

2. Input Materials - Not applicable

3. Operating Parameters - Not applicable

4. Utilities - The amount of power required is small compared to the power required for other drilling operations.

5. Waste Streams - None

6. EPA Source Classification Code - None exists

7. References -

(1) Lynch, Edward J., Formation Evaluation, New York, Harper and Row, 1962.

(2) Petroleum Extension Service Industrial and Business Training Bureau, A Primer of Oil Well Drilling, 3rd. ed., Austin, Texas, 1970.

(3) Environmental Conservation. The Oil and Gas Industries, Vol. II, Washington, D. C., The National Petroleum Council, 1972.

(4) The Petroleum Handbook, London, Shell International Petroleum Company Limited, 1966.

Well Completion

1. Function - Well completion encompasses all of those activities required in preparing the drilled hole for production.

According to the nature of the producing formation, different completion methods are used, but a string of casing is always run into the hole and cemented, at least as far as the top of the producing layer. When the producing formation is firm, the casing may be cemented immediately above it, leaving the producing zone unsupported. If the producing formation is judged to be in danger of caving or sloughing, it must be supported. The most common way of completing a well with a structurally weak production zone is by perforating (comprising 95% of well completions). Casing is run through the producing layer to the bottom and cemented, after which holes are shot through the casing and cement in the producing layer with a perforator. Perforators either contain charges which fire steel bullets, or they employ small shaped charges that blow holes through the casing and cement. An alternative to perforating is the practice of hanging a small perforated pipe (liner) from the bottom of the set casing. The presence of sand formations may necessitate the use of a mesh liner or fine gravel to prevent abrasive particles from entering the production fluid.

After the cement has hardened, a relatively small diameter production tubing is installed inside the casing. Multiple production zones require multiple strings of production tubing to produce several zones simultaneously but separately.

There are various things that may be done to encourage the fluid from the formation to enter the production tubing and travel to the surface. If the producing formation is carbonate rock and has low permeability, acid is pumped under pressure down the tubing and into the formation to open it and allow production fluid to enter the tubing (see Process 19). If the producing formation is sandstone of low permeability, fracturing may be used to increase the permeability and to encourage production. Fracturing is accomplished by forcing a sand and fluid suspension into the formation and literally cracking it open (see Process 18). Additionally, the well may be swabbed by lowering a rubber-faced hollow cylinder into the hole and withdrawing it, creating a vacuum and pulling oil to the surface.

The last step of completing a well is the installation of a Christmas tree (a series of valves) for freely flowing wells or a pump to bring the production to the surface.

2. Input Materials - See Processes 18 and 19.

3. Operating Parameters - See Processes 18 and 19.

4. Utilities - Power is required for (1) the draw works and (2) pumping solutions and cement into the hole.

5. Waste Streams -

. Acid - Treating formations with acid results in salt-enriched acid solutions which present a disposal problem because of their low pH and high solids content. The amount of acid used for well treatment procedures is summarized in Table 1.

Table 1. YEARLY VOLUMES OF ACIDS USED FOR WELL TREATMENT

Acid	Volume Gal/Yr.	Volume m^3/Yr.
Hydrochloric	8.7×10^7	3.3×10^5
Formic	2.0×10^5	7.6×10^2
Acetic	1.0×10^5	3.8×10^2

An additional possibility for pollution exists in the corrosive nature of the acid solutions toward pipe in the well. When corrosion causes pipe failure, adjacent strata (which may be aquifers) are contaminated.

6. EPA Source Classification Code - None exists

7. References -

(1) Petroleum Extension Service Industrial and Business Training Bureau, A Primer of Oil Well Drilling, 3rd. ed., Austin, Texas, 1970.

(2) Environmental Conservation. The Oil and Gas Industries, Vol. II, Washington, D. C., The National Petroleum Council, 1972.

(3) The Petroleum Handbook, London, Shell International Petroleum Company Limited, 1966.

(4) Lynch, Edward J., Formation Evaluation, New York, Harper and Row, 1962.

(5) Rogers, Walter F., Composition and Properties of Oil Well Drilling Fluids, Houston, Texas, Gulf Publishing Company, 1963.

(6) Collins, Gene, "Oil and Gas Wells - Potential Polluters of the Environment?", J. of WPCF 43 (12), 2383-93 (1971).

CRUDE PROCESSING

The distinction between oil wells and gas wells is rather arbitrary. There are very few wells producing oil or gas alone; most produce both. In addition most wells produce a certain amount of water or brine. The well is often called an oil well when crude is the major volume of production or when crude is the production of interest such as in locations very distantly located from a gas plant or refinery.

This segment of the industry is concerned with the operations necessary in preparing the crude oil for refinery use. Figure 2 is a representative flowsheet for crude processing which includes water removal by "knock-out" and emulsion breaking, gas removal by two or three phase separation, and storage. These process descriptions are presented sequentially, but the oil production industry is very diverse, and the process steps may be altered to suit specific location and production needs. Most of the crude processing steps take place in the field, at the well head, or at a central gathering station. In offshore operations, the entire production (gas, oil, water) may be shipped ashore by barge or pipeline for processing. Alternatively, a centralized processing platform may serve several wells in the same area.

A major liquid waste stream in this segment is production water or oily brine. There are also hydrocarbon and acid gas emissions from gases entrained in the crude which may escape upon exposure to air. If sour gases from separators are flared, an emission of SO_x also results.

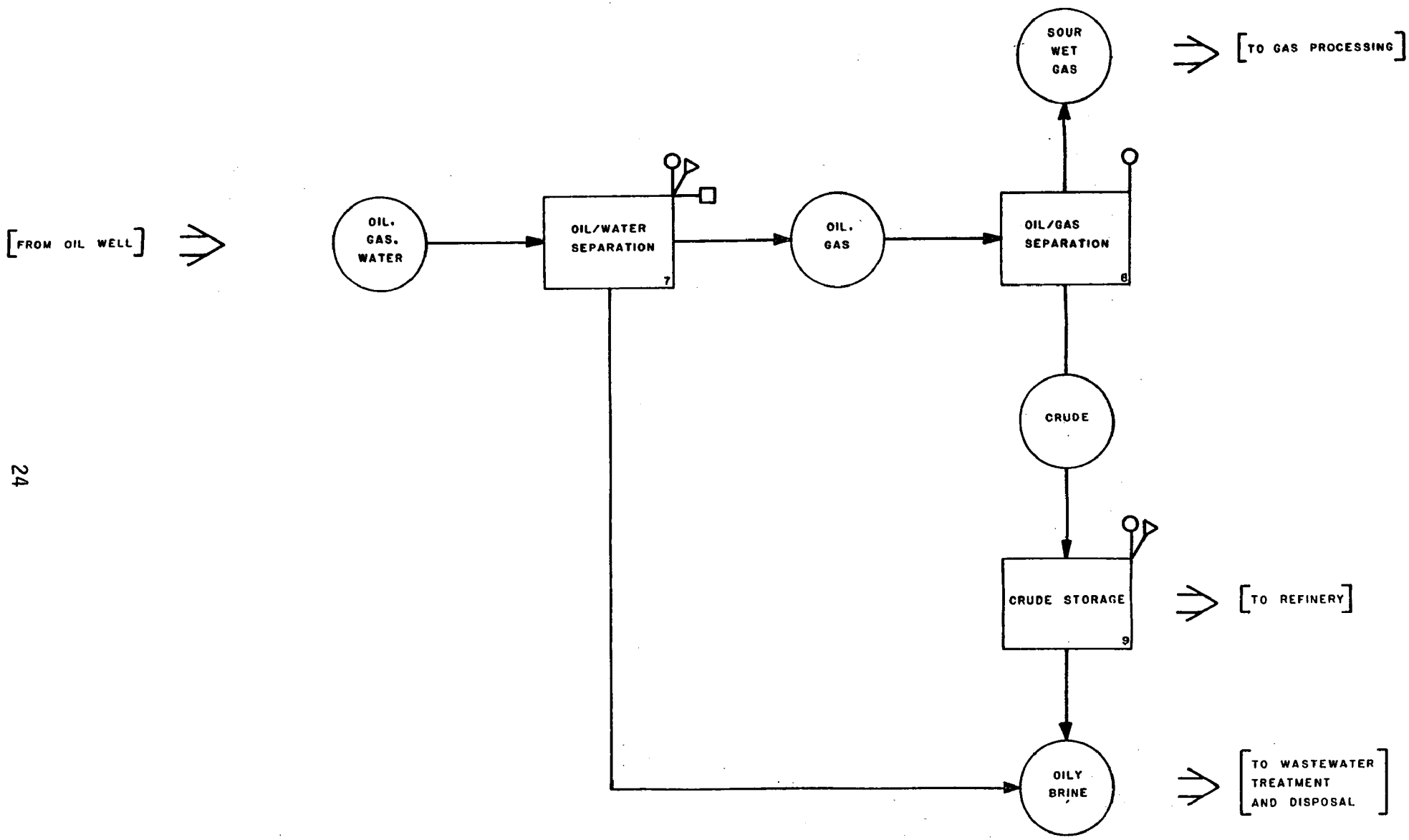

FIGURE 2. CRUDE PROCESSING

Water Removal

1. Function - The purpose of crude separation is to remove the oily brine from crude oil. Water is always pumped with oil, and most of it must be removed before the oil is shipped to the refinery. The two major separation processes used are free water knock-out and emulsion breaking.

   Free water knock-out is the settling out of the free water in a large tank equipped with baffles to minimize the amount of turbulence and mixing.

   Emulsions are formed when water and oil systems are violently mixed in the presence of impurities which impede the settling out of the water. This water can be removed by one of several means (1) heat, (2) chemical destabilization, (3) electrical coalescence, and (4) gravitational settling.

   Heat alone is not used as much today as it once was, but it is used in conjunction with other methods. Chemical destabilization causes the emulsion to break up by removing the effects of the impurities that stabilize it. In electrical coalescence, an electrical field is passed through the emulsion. When the polar molecules holding the emulsion stable turn to follow the lines of the electric field, the droplets combine and fall out by the force of gravity. If an emulsion is not too strong, it may settle out if allowed to sit for some time; this process is gravitational settling.

   The required water disposal may be difficult, especially offshore. If water cleaning facilities are available, offshore production water is cleaned before it is pumped into the sea. Otherwise the oily waste is pumped into tankers or pipelines for treatment onshore.

2. Input Material - Production from an oil well

3. Operating Parameters - Electric dehydrators are 2-4 meters (6-12 ft.) in diameter and 4-24 meters (12-80 ft.) long. Capacities are 160 to 16,000 cu m per day (1000-100,000 bpd). Operating voltages are 440v at the switchboard and 16,500v at the electrode. Residence time is about 20 minutes.

   Heater treaters are normally operated at 99°C (210°F).

4. Utilities - Utilities required include fuel for heaters, power to run equipment to inject chemicals for chemical treatment, and power for

electrical treaters. For electric treaters, electric power consumption varies with the conductivity of the crude oil. The least conductive crudes, ordinarily of the high API gravity, require about 0.5 kW for each 160 cu m (1000 barrels) per day capacity, while heavy crudes may require 1.5 kW per 160 cu m (1000 barrels) per day capacity.

Heater treaters are powered by fuel gas. They require 5 to 70 normal cu m of gas per cubic meter of crude processed (3 to 40 x 10^4 SCF per 1000 barrels) depending on the amount of water present in the production.

5. Waste Streams -

. Brine - On the average, two to three cubic meters of water are produced per cubic meter of oil. This amounts to up to 4.0 million cubic meters (25 million barrels) of oily salt water produced daily in the U.S. This waste contains an average concentration of solids seven times that of sea water. The disposition of waste brine is shown in Table 2.

Table 2. DISPOSITION OF WASTE BRINE

Amount	Disposal Site
72%	Underground formations or injection for secondary recovery.
12%	Non-potable water sites, approved disposal sites, or used in irrigation or for livestock.
12%	Unlined pits
4%	Rivers

. Hydrocarbons - Oil carried along with the brine is a source of emissions to the air and to water supplies. Current disposal practices allow the possibility of evaporative emissions as well as the possibility of water and land contamination.

In isolated locations dregs from the heater treaters may be dumped into open pits and burned. This practice causes air emissions from combustion.

Waste water separators are in themselves sources of hydrocarbon emissions. An estimated 33 metric tons (36 short tons) of hydrocarbons are emitted daily from these operations.

6. EPA Source Classification Code - None exists

7. References -

(1) Bansback, P. L., "The How and Why of Emulsions", Oil and Gas Journal, 68 (36) 87-93 (1970).

(2) Waterman, L. C. and R. L. Pettefer, "Oil Field Emulsions and Their Electrical Resolution", Surface Operations in Petroleum Production, George V. Chilingar and Carrol M. Beeson, eds., New York, American Elsevier Publishing Company, Inc., 1969, pp. 29-45.

(3) Radian Corp., Study on Control of Hydrocarbon Emissions from Petroleum Liquids, EPA Contract No. 68-02-1319, Task 12, Austin, Tx., 1975.

(4) Environmental Conservation. The Oil and Gas Industries, Vol. II, Washington, D. C., The National Petroleum Council, 1972.

(5) MSA Research Corp., Hydrocarbon Pollutant Systems Study, Vol. I, APTD-1499, PB 218073, Evans City, Pa., 1972.

(6) Processes Research, Inc., Screening Report, Crude Oil and Natural Gas Production Processes, EPA Contract No. 68-02-0242, Cincinnati, Ohio, 1972.

(7) Booz-Allen Applied Research, Inc., A Study of Hazardous Waste Materials, Hazardous Effects and Disposal Methods, Vol. III, PB-221467, Bethesda, Md., 1973.

(8) Cavanaugh, E. C., et al., Atmospheric Environmental Problem Definition of Facilities for Extraction, On-Site Processing, and Transportation of Fuel Resources, EPA Contract No. 68-02-1319, Task 19, Austin, Tx., 1975.

(9) Reid, George W. and Leale E. Streebin, Evaluation of Waste Waters from Petroleum and Coal Processing, EPA-R2-72-001, Washington, D. C., 1972.

Gas-Oil Separation

1. Function - The purpose of this process is to separate entrained gases from crude oil.

   There are two types of separators: two-phase for separating gas and oil and three-phase for separating gas, oil, and water. Non-solution gases can be separated by settling, agitation, baffling, heat, or chemicals. Most separators of vertical, spherical, or horizontal configuration employ a series of baffles to separate the gases from the crude. The horizontal separator is usually used when the gas oil ratio is large, the vertical separator is used when the gas oil ratio is low, and the spherical separator is used when the gas oil ratio is in an intermediate range.

   A stage separation procedure may be used in which a series of separators are operated to perform two or more flash vaporizations at sequentially reduced pressures. This is particularly useful when well-head pressure is high.

   The gas produced is sent to a gas processing plant and the separated crude is ready for storage.

2. Input Materials - Oil containing light hydrocarbon gases

3. Operating Parameters - The operating temperatures and pressures will generally begin with the well-head temperature and pressure and drop step-wise to ambient conditions. Separator retention times of 1 to 3 minutes are generally adequate, but 5 to 20 minutes may be required for difficult separations.

4. Utilities - The well-head pressure does most of the work.

5. Waste Streams -

   - Hydrocarbons - At remote locations where there is no need for recovered gases to maintain formation pressure or when there is no economical way to transport them to a processing plant, the hydrocarbon gases may be vented or flared. An estimated 1.34 billion cu m/yr (50 billion cu ft/yr) of natural gas is lost to the atmosphere from venting, flaring, and fugitive losses.

   - Sulfur Compounds - If sour gas from the separator must be disposed of, it must be flared to change the highly toxic H_2S to SO_x which

is emitted to the atmosphere with combustion wastes. Assuming an average concentration of 0.5 mole percent sulfur in domestic natural gas, 7.08 million cu m/yr (250 million cu ft/yr) of gaseous sulfur compounds (SO_x or H_2S) are emitted to the atmosphere from flares and fugitive losses.

- Brine - From three phase separators there is an oily brine waste as discussed in Process 7.

6. EPA Source Classification Code - None exists

7. References -

(1) Chilingar, George V. and Carrol M. Beeson, "Separation of Gas and Oil", Surface Operations in Petroleum Production, George V. Chilingar and Carrol M. Beeson, eds., New York, American Elsevier Publishing Company, Inc., 1969, pp. 15-28.

(2) Frick, Thomas C., ed., Petroleum Production Handbook, Vol. I, New York, McGraw-Hill, 1962.

(3) Processes Research, Inc., Screening Report Crude Oil and Natural Gas Production Processes, EPA Contract No. 68-02-0242, Cincinnati, Ohio, 1972.

Crude Storage

1. Function - Crude is stored in tanks to await shipment to the refinery. The tanks are fixed or floating-roof types with capacities up to 40,000 cubic meters (250,000 barrels). Newer technology provides for vapor recovery systems to capture the lighter hydrocarbons evaporating from the crude in the tanks.

   Storage tanks also serve the purpose of a settling tank, as they allow additional production water to separate.

2. Input Materials - Crude oil

3. Operating Parameters - Atmospheric conditions

4. Utilities - Those required in pumping the crude

5. Waste Streams -

   . Brine - 12 liters per cubic meter stored crude

   . Hydrocarbons - Emissions from storage tanks are of two types: working losses from loading operations and breathing losses resulting from expansion and contraction of the vapor space due to temperature cycles. Emission factors are given below.

Table 3. HYDROCARBON EMISSION FACTORS FOR CRUDE STORAGE

Type of Tank	Emission Factor
Fixed Roof	
Breathing Loss	40 g/day-10^3ℓ capacity (0.3 lb/day-10^3 gal capacity)
Working loss	1000 g/day-10^3ℓ throughput (8.0 lb/day-10^3 gal throughput)
Floating Roof	
Breathing loss	14,000-73,000 g/day-tank (30-160 lb/day-tank)
Working loss	Negligible

6. EPA Source Classification Code - None exists

7. References -

(1) Nack, H., et al., Development of an Approach to Identification of Emerging Technology and Demonstration Opportunities, EPA 650/2-74-048, Columbus, Ohio, Battelle-Columbus Labs., 1974.

(2) Radian Corporation, A Program to Investigate Various Factors in Refinery Siting, Final Report, Contract No. EQC 319, Austin, Tx., 1974.

(3) Environmental Protection Agency, Compilation of Air Pollutant Emission Factors, 2nd ed., AP-42, Research Triangle Park, N. C., 1973.

NATURAL GAS PROCESSING

Natural gas is composed of methane with decreasing amounts of ethane, propane, butane, and heavier hydrocarbons. It is normally saturated with water vapor and may contain nitrogen, helium, carbon dioxide, hydrogen sulfide, and mercaptans. The purpose of natural gas processing is to produce a natural gas for pipeline sales and to recover heavier hydrocarbons for refinery, petrochemical, or fuel use. Common sales specifications for natural gas include a gross heating value of not less than 8,900 kcal per cu m (1,000 Btu per cu ft.), a maximum of 0.6 g H_2S per 100 normal cu m (0.25 grains of H_2S per 100 SCF), with a maximum of 1.3 grams (20 grains) total sulfur, and a water content low enough so that line freeze-ups will not occur.

The processes used to meet these sales requirements are presented in this segment. Although the process steps are presented sequentially in Figure 3, they are by no means intended to be in a prescribed order. Variations in sequences, operating conditions, and physical locations occur throughout the industry with local production conditions and geographical locations dictating the particular processing methods.

Hydrocarbon liquids are separated from raw gas from wells and oil-gas separators. The gas is then sweetened in an acid gas removal process, dehydrated, and separated into its hydrocarbon components in the product separation process. Recovered hydrocarbon liquids are also processed in the product separation module. The acid gas stream when processed by the sulfur recovery unit provides by-product sulfur. These processing steps may be accomplished in the field, at a gas processing plant, or in a refinery depending on the location of the production with respect to processing facilities.

Hydrocarbon losses encountered in natural gas processing are mainly in the form of fugitive emissions. At any point that the system is open to the atmosphere, hydrocarbon emissions occur. These losses were estimated at 3 kg per 10^3 normal cu m (190 lbs per 10^6 SCF) of natural gas processed or about 6,280 metric tons (6,920 short tons) per day in 1973. Emissions of H_2S, SO_2, elemental sulfur, and glycols are also encountered.

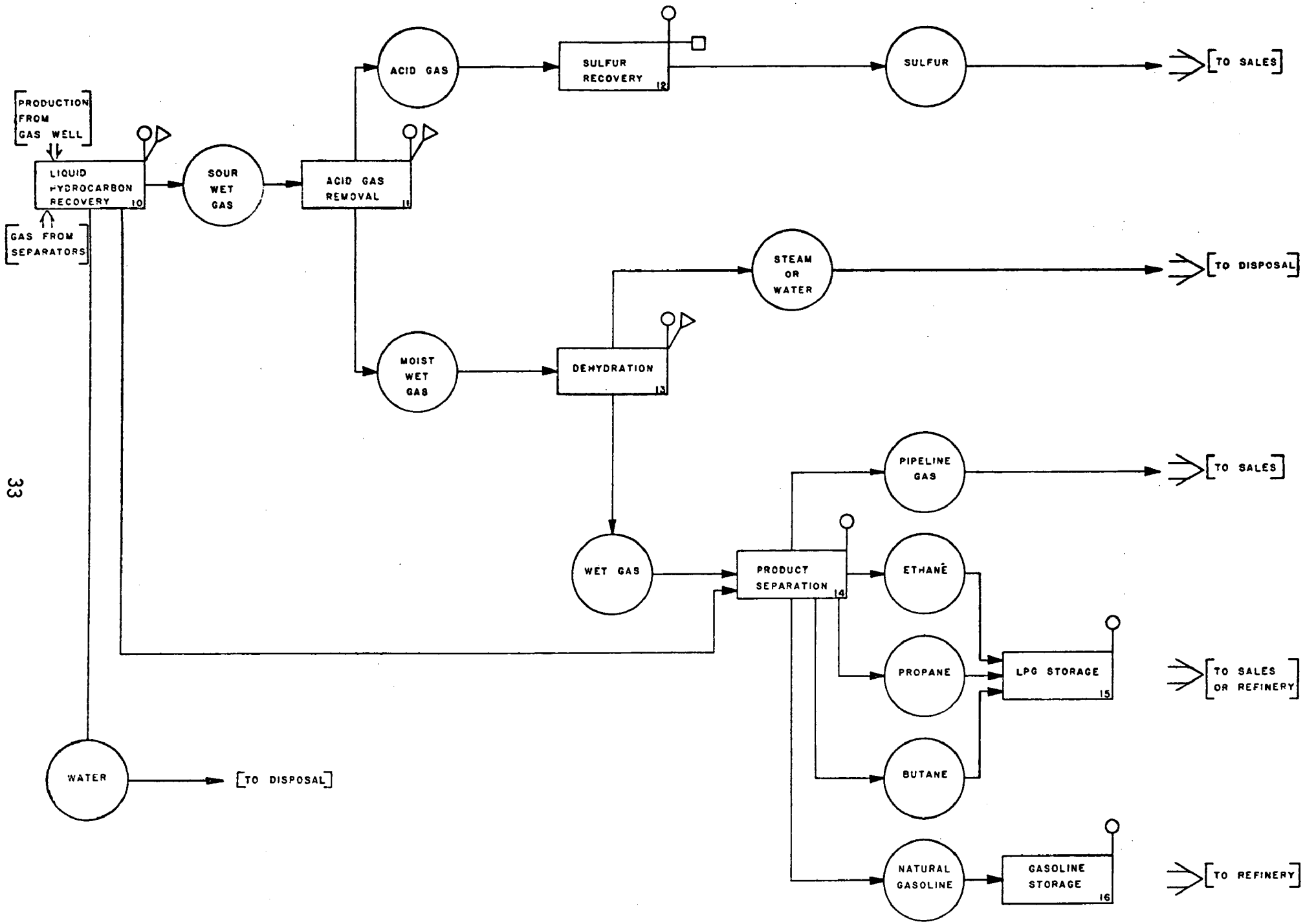

FIGURE 3. NATURAL GAS PROCESSING

Liquid Hydrocarbon Recovery

1. Function - The purpose of liquid hydrocarbon recovery is the separation of condensable hydrocarbons from the natural gas stream. This first liquid separation step often takes place in the field to facilitate pipeline transport to a processing center. The process usually involves a water knockout step to remove any liquid water formed in transporting the gas from the well, and there may be a further dehydration dictated by the requirements of the particular recovery process. The recovery is generally accomplished by changing conditions of the gas so that the equilibrium between the various components is upset causing the heavier hydrocarbons to condense. The equilibrium change may be caused by change in temperature, change in pressure, introducing a new material, or a combination of these. Fairly wet or very dry gas may be produced, depending on the efficiency of the recovery process. This process description deals with the case of the fairly wet gas which must be further separated in the product separation process before it is sold to pipeline companies. There are three major types of liquid recovery processes used singly or in combination to effect the necessary separation.

Adsorption is accomplished in towers filled with activated alumina or charcoal which adsorbs the heavier hydrocarbons. After the adsorbing material has been saturated, heated gas or steam is passed through the bed to desorb the hydrocarbons which are condensed and ultimately fractionated.

In the absorption process the gas is passed through an absorber unit where absorber oil removes propane and heavier components. The methane and ethane are allowed to pass up through the absorber tower in the gaseous phase, while the enriched absorber oil is sent to a stripper.

Refrigeration processes involve decreasing the temperature of the gas to promote condensation of the heavier hydrocarbons. Of the combinations of processes the most often used is a combination refrigeration/absorption process.

One of the newer technologies involves the use of a turboexpander in which the natural gas is expanded through a turbine compressor from which it exhausts at extremely low temperatures; most of the gas except methane is condensed.

The wet sour gas produced is sent to the acid gas removal process and the recovered liquids are sent to the product separation step.

2. Input Streams - Production gas and gas from oil separators.

3. Operating Parameters - Liquid recovery processes vary significantly in their operating requirements. Temperatures as low as minus 40°C (-40°F) and pressures as high as 3×10^5 kg/square meter (400 psi) are encountered.

   In the oil absorption process stripping is generally done at low pressure. The stripped crude is then pumped up to high pressure to act as an absorbent, and the enriched crude is then reduced to atmospheric pressure. The absorption factor increases as the temperature decreases; low pressures are conducive to good stripping, but high pressure aids condensation of the light ends. The molecular weight of the lean oil used in the absorber depends on the average tower temperature. Near minus 18°C (0°F), oil with a molecular weight of 120-140 is commonly used; near 38°C (100°F), molecular weights of 180-200 are used.

   Turboexpanders operate with feed gas pressures from 8×10^4 to 2×10^6 kg/square meter (100 to 3000 psig) with capacities of 8×10^5 to 42×10^6 cu m per day (30 to 1500 MMscfd). Outlet temperatures may be as low as minus 250°C (-420°F).

4. Utilities - In general about 3.2% of the gas produced is used in compression procedures.

   Turboexpanders require 0.1 to 2.0% of the feed gas depending upon compression requirements.

   Refrigerated absorption units consume about 0.75% of the produced gas energy.

5. Waste Streams - Fugitive emissions only

   - Hydrocarbons - Emissions result from leaks in pumps, valves, compressors, and other equipment.

   - Hydrogen Sulfide - If the gas is a sour gas, the above mentioned sources will provide hydrogen sulfide emissions.

6. EPA Source Classification Code - None exists

7. References -

   (1) Campbell, John M., "Absorption and Fractionation Fundamentals", Gas Conditioning and Processing, John M. Campbell, Norman, Oklahoma, 1970.

   (2) Cotterlaz-Rennaz, "New French Gas Cooler Recovers 120 BPD Gasoline", World Oil 177 (2), 57-59 (1973).

(3) Eckerson, B. A., A. L. Johnson, "Natural Gas and Natural Gas Liquids", Surface Operations in Petroleum Production, George V. Chilingar and Carrol M. Beeson, eds., New York, American Elsevier Publishing Company, Inc., 1969.

(4) "NG/LNG/SNG Handbook", Hydrocarbon Processing, April 1973.

(5) Processes Research, Inc., Screening Report, Crude Oil and Natural Gas Production Processes, PB-222718, Cincinnati, Ohio, 1972.

(6) Petroleum Extension Service, Field Handling of Natural Gas, 3rd. ed., Austin, Texas, The University of Texas at Austin, 1972.

(7) Houghton, J. and J. D. McLay, "Turboexpanders Aid Condensate Recovery", Oil and Gas Journal, 76-79 (March 5, 1973).

Acid Gas Removal

1. Function - The acid gas removal unit is designed to remove hydrogen sulfide from hydrocarbon gases by absorption in some aqueous, regenerative sorbent. A number of gas treatment processes are available, and they are distinguished primarily by the regenerative sorbent employed. Amine-based sorbents, however, are most commonly used.

   The feed to the unit is contacted with the sorbent, such as diethanolamine, in an absorption column to selectively absorb H_2S from the hydrocarbon gases. Hydrogen sulfide is then removed from the sorbent in a regeneration step. The products are a sweet hydrocarbon gas and a concentrated hydrogen sulfide stream. The sweet gas may either be further processed in light end recovery processes or may be charged as a raw material to petrochemical processes. The hydrogen sulfide stream is normally routed to a sulfur plant for recovery of its sulfur content. If there is no sulfur recovery plant available, the sulfide gas must be flared to produce the less toxic sulfur oxides.

2. Input Materials - The sour wet gas from the liquids recovery process.

   The sorbent used to remove hydrogen sulfide is also a feed to this unit. It is usually regenerable, and make-up rates are generally quite low. Also required,

   1.2 kg of $5 \times 10^4 \frac{kg}{sq\ m}$ steam per kg of acid gas removed.

3. Operating Parameters - The following conditions are typical of absorber operations:

   Pressure : 10.5 kg/sq cm

   Temperature: 38°C

4. Utilities -

   Electricity: .022 kWh/kg removed gas

   Cooling Water: 45-82 liters/kg removed gas

5. Waste Streams -

   - Sulfur Compounds - No atmospheric emissions, other than fugitive losses, are produced from this unit if it is used in conjunction with a sulfur recovery unit. If the acid gas is flared, there are

atmospheric emissions of sulfur oxides. Current information necessary for estimating the amount of sulfur oxides and other sulfur compounds emitted to the atmosphere from acid gas removal processes proved unavailable.

- Amine Solutions - Liquid effluents are produced as spent amine solutions which must be replaced; about 4 liters per 159 m^3 (1 gal/1000 bbl) for diethanolamine. The impact on the water treating system may be severe, however, since 40,000 to 80,000 liters may be drained at once. The amount of waste is proportional to the amount of hydrogen sulfide removed from the gas.

6. EPA Source Classification Code - None exists

7. References -

(1) Nack, H., et al., Development of an Approach to Identification of Emerging Technology and Demonstration Opportunities, EPA 650/2-74-048, Columbus, Ohio, Battelle-Columbus Labs., 1974.

(2) Radian Corporation, A Program to Investigate Various Factors in Refinery Siting, Final Report, Contract No. EQC 319, Austin, Tx., 1974.

(3) "Hydrocarbon Processing Refining Processes Handbook", Hydrocarbon Proc. 53 (9), (1974).

(4) Processes Research, Inc., Screening Report, Crude Oil and Natural Gas Production Processes, PB-222718, Cincinnati, Ohio, 1972.

(5) Ecology Audits, Inc., Sulfur Compound Emissions of the Petroleum Production Industry, EPA Publication No. 650/2-75-030, Dallas, Texas, 1974.

Sulfur Recovery

1. Function - A sulfur recovery plant converts hydrogen sulfide to elemental sulfur by controlled combustion and reactions occurring in a series of catalytic beds. The feed is first combusted with substoichiometric amounts of air to form sulfur and water. The off gas is cooled, and sulfur is condensed as a liquid. About 60 to 70 percent conversion occurs in the furnace.

   The remaining gases are reheated and passed through catalytic reactors. Each reactor has an effluent condenser where the elemental sulfur is recovered. Reheat of reactor effluent is necessary for sulfur recovery in subsequent reactors. The number of reactors varies with the conversion desired and with the acid gas concentration. Normally, two to four reactors are used as only fifty to sixty percent of the remaining sulfur is converted in each reactor stage.

   The unconverted acid gas leaves the process in a tail gas stream and is either further processed or incinerated to remove the last traces of reduced sulfur compounds. The sulfur recovered by this process is sold as a by-product.

2. Input Streams - Acid gases from the acid gas removal plant are the feed to the sulfur plant.

3. Operating Parameters - The following conditions are typical of those found in the reactors:

   Temperature: 245°C

   Pressure: 1-2 Atm

   A bauxite catalyst is most commonly employed for this process.

4. Utilities:

   Heater: 2220 kcal/kg sulfur

   Steam: 4 kg/kg sulfur - generated in a waste heat boiler

5. Waste Streams - The tail gas from this unit represents the major sulfur emissions in a gas processing plant. Possible sulfur emissions are SO_2, H_2S, COS, CS_2, and mercaptans. After reaction, most of the sulfur emissions are in the form of SO_2; sulfur dioxide concentration in the effluent tail gas is approximately 15,000 ppm. Tail gas clean-up processes are commercially available to reduce sulfur emissions.

   Disposal of the spent bauxite catalyst creates a solid waste problem. The magnitude of this problem depends upon the design conversion and operating capacity of the sulfur plant.

6. EPA Source Classification Code - None exists

7. References -

(1) Radian Corporation, A Program to Investigate Various Factors in Refinery Siting, Final Report, Contract No. EQC 319, Austin, Tx., 1974.

(2) Nack, H., et al., Development of an Approach to Identification of Emerging Technology and Demonstration Opportunities, EPA 650/2-74-048, Columbus, Ohio, Battelle-Columbus Labs., 1974.

Dehydration

1. Function - Dehydration removes water from the gas after the acid gas removal process. The required water content is specified as the dew point, the temperature at which the water begins to condense. The excess water is removed by refrigeration, absorption, or adsorption. Refrigeration processes decrease the temperature below the required dew point; the condensed moisture is collected for disposal. Absorption processes allow the moist gas to flow over hygroscopic materials, usually di- or tri-ethylene glycol. The use of a solid dessicant to remove the water is called adsorption. Sometimes higher molecular weight hydrocarbons are removed in adsorption as well.

2. Input Materials - Moist wet gas from the acid gas removal process.

   Two to five kilograms of glycol are circulated per kilogram of water to be removed in absorption processes.

3. Operating Parameters - For condensation processes, temperature and pressure are interdependent. For example, if the required dew point is 10°C (50°F) at 105,500 kg/sq m (135 psig), and the best available cooling is 27°C (80°F), pressures of 33,400 kg/sq m (460 psig) will give the desired water content.

   For absorption processes using di- or triethylene glycol absorption temperatures must be kept below the temperature at which the glycol decomposes (164°C for DEG, 207°C for TEG). Dew point depressions of 22-28°C (40-50°F) can be obtained using DEG at atmospheric pressure and reboiler temperatures of 143-160°C (290-320°F); depressions of 33-42°C (60-75°F) can be obtained with TEG at reboiler temperatures of 177-191°C (350-375°F). Temperatures in the regenerator, which separates the absorbed water from the glycol, usually range from 190-204°C (375-400°F). The pH is controlled at 6.0 to 7.5, as low pH accelerates decomposition of the glycol.

   Regeneration temperatures for solid dessicants are 249 to 260°C (480-500°F).

4. Utilities - A glycol absorption process requires about 0.1% of the fuel produced.

5. Waste Streams -

   - Glycol - An estimated 0.01 m^3 of triethylene glycol per 10^6 normal m^3 of gas processed (0.1 gal per 10^6 cu ft.) is emitted by the glycol absorption process in vented water vapor.

. Water - Water contaminated with glycol may be vented as steam or it may be disposed of as a liquid.

6. EPA Source Classification Code - None exists

7. References -

(1) Campbell, John M., "Absorption and Fractionation Fundamentals", Gas Conditioning and Processing, John M. Campbell, Norman, Oklahoma (1970).

(2) Cotterlaz-Rennaz, "New French Gas Cooler Recovers 120 BPD Gasoline", World Oil 177 (2), 57-59 (1973).

(3) Eckerson, B. A., A. L. Johnson, "Natural Gas and Natural Gas Liquids", Surface Operations in Petroleum Production, George V. Chilingar and Carrol M. Beeson, eds., New York, American Elsevier Publishing Co., Inc., 1969.

(4) "Gas Dehydration", from "Dehydration and Treating", Engineering Data Book, Natural Gas Producers Suppliers Association (1972).

(5) Hammerschmidt, E. G., K. R. Knapp, and C. L. Perskin "Gas Hydrates and Gas Dehydration", Gas Engineers Handbook, New York, Industrial Press, 1969.

(6) Patterson, E. O. Jr., "Get Low Dewpoints with Solid Dessicants", Oil and Gas Journal 67 (9), (108-109) 1969.

(7) "NG/LNG/SNG Handbook", Hydrocarbon Processing, April 1973.

(8) Processes Research, Inc., Screening Report, Crude Oil and Natural Gas Production Processes, PB-222718, Cincinnati, Ohio, 1972.

Product Separation

1. Function - The purpose of this process step is the separation of the hydrocarbon components of the dehydrated gas and the hydrocarbon liquids from the liquid recovery process.

   Methane is piped to sales; ethane, propane, and butane are stored under pressure until they are shipped to the refinery as LPG; the remainder of the hydrocarbons, known as natural gasoline, are stored at atmospheric pressure to await shipment to the refinery for processing.

   There are several different methods used in accomplishing this separation. Commonly used processes involve absorption, refrigerated absorption, refrigeration, compression, and adsorption.

   In an absorption process the wet field gas is contacted with an absorber oil in a packed or bubble tray column. Propane and heavier hydrocarbons are absorbed by the oil while most of the ethane and methane pass through the absorber. The enriched absorber oil is then taken to a stripper where the absorbed propane and heavier compounds are stripped from the oil.

   The natural gas feed to a refrigerated absorption process must be dehydrated to a minus 40°C dew point prior to entering the unit. All hydrocarbons except methane are absorbed by absorber oil operating at this temperature. These absorbed hydrocarbons and the oil are passed through a series of fractionation columns from which ethane, propane, and heavier hydrocarbons are removed as product streams.

   In refrigeration, a cryogenic process, the natural gas must be dried to a dew point of minus 101°C or lower using molecular sieve beds. The dry gas is then passed through a heat exchanger where it is cooled to minus 37°C. Condensed hydrocarbons are removed in a gas-liquid separator. The gas from the separator is cooled to minus 93°C and passed through a second separator where more condensed liquids drop out. The liquids from two separators are fed to a series of distillation columns where methane, ethane, propane, butanes, natural gasoline, and other products are recovered.

   A compression process uses two stages of compression, each followed by cooling and gas-liquid separation, to produce a wet natural gas product and natural gasoline. This is not a widely used process.

The adsorption processes consist of two or more beds of activated carbon. The beds are used alternatively, with one or more beds on stream while the others are being regenerated. The activated carbon adsorbs all hydrocarbons except methane. The bed is regenerated by means of heat and steam, which remove the adsorbed hydrocarbons as a vapor. This vapor is then condensed permitting the water to be separated from the liquid hydrocarbons. The resulting hydrocarbon product is fed to a fractionation process where the various components are separated.

2. Input Material - Liquid hydrocarbons from the liquids recovery process and wet gas from the dehydrator.

3. Operating Parameters - Inlet gas and oil temperatures for absorbers and refrigerated absorbers:

   Water cooled: 32-38°C

   Propane cooled: minus 40° - minus 18°C

   Pressures in the absorbers may be as high as 2.8×10^5 kg/sq m (400 psi), but are usually lower.

   The temperatures, pressures, and molecular weights of absorber oils are generally controlled to give maximum recovery.

   The refrigeration process temperature is minus 37°C to minus 93°C.

4. Utilities - 2-3% of the methane produced.

5. Waste Streams - Fugitive emissions only from leaking pumps and valves.

6. EPA Source Classification Code - None exists

7. References -

(1) Houghton, J. and J. D. McLay, "Turboexpanders Aid Condensate Recovery", Oil and Gas Journal 71 (10), 76-79 (1973).

(2) Eckerson, B. A. and A. L. Johnson, "Natural Gas and Natural Gas Liquids", Surface Operations in Petroleum Production, George V. Chilingar and Carroll M. Beeson, eds., New York, American Elsevier Publishing Company, Inc., 1969.

(3) "NG/LNG/SNG Handbook", Hydrocarbon Processing, April, 1973.

(4) Petroleum Extension Service, Plant Processing of Natural Gas, Austin, Texas, The University of Texas at Austin, 1974.

(5) Cavanaugh, E. C. et al., Atmospheric Environmental Problem Definition of Facilities for Extraction, On-Site Processing, and Transportation of Fuel Resources, EPA Contract No. 68-02-1319, Task 19, Austin, Texas, 1975.

LPG Storage

1. Function - The purpose of LPG storage is to store the liquified petroleum gas (LPG) before it is shipped to the refinery or to sales. Because the vapor pressure of LPG is high enough that it could vaporize at atmospheric pressures, it must be held in pressure vessels. The ethane, propane, and butane from the separation process may be stored together or separately. LPG is generally propane, but it may contain some ethane and butane.

   An alternative to storing LPG under pressure is handling it at reduced temperatures. Refrigerated LPG may be stored in insulated pits or in underground formations.

2. Input Materials - The ethane, propanes, and butanes from the gas separation process

3. Operating Parameters -

   Pressure vessels:

   Temperature: ambient

   Pressure: 1.0×10^5 kg/sq m (250 psig)

4. Utilities - Those required to pump the LPG.

5. Waste Streams - Loading and unloading losses encountered

6. EPA Source Classification Code - None exists

7. References -

(1) Eckerson, B. A. and A. L. Johnson, "Natural Gas and Natural Gas Liquids", Surface Operations in Petroleum Production, George V. Chilingar and Carrol M. Beeson, eds., New York, American Elsevier Publishing Company, Inc., 1969.

(2) Nack H., et al., Development of an Approach to Identification of Emerging Technology and Demonstration Opportunities, EPA 650/2-74-048, Columbus, Ohio, Battelle-Columbus Labs., 1974.

(3) Environmental Protection Agency, Compilation of Air Pollutant Emission Factors, 2nd. ed., AP-42, Research Triangle Park, N. C., 1973.

(4) Radian Corporation, Study on Control of Hydrocarbon Emissions from Petroleum Liquids, EPA Contract No. 38-02-1319, Task 12, Austin, Texas, 1975.

Gasoline Storage

1. Function - The purpose of gasoline storage is to store the natural gasoline from the product separation process before it is shipped to sales or to the refinery. The capacity of the storage tanks used varies with the size of lease concerned. The tanks may be fixed roof, floating roof, or variable vapor space types.

2. Input Materials - Natural gasoline from gas separation

3. Operating Parameters - Temperature and pressure are usually ambient.

4. Utilities - Those required to pump the gasoline.

5. Waste Streams - Gasoline storage emission factors are given in Table 4.

Table 4. HYDROCARBON EMISSION FACTORS FOR GASOLINE STORAGE

Type of Tank	Emission Factor
Floating Roof	
Standing losses	10.5 g/day-10^3ℓ (0.088 lbs/day-10^3 gal)
Fixed Roof	
Breathing losses	30 g/day-10^3 (0.25 lbs/day-10^3 gal)
Filling losses	1.1 g/ℓ (9.0 lb/10^3 gal)
Variable Vapor Space	
Filling losses	1.2 g/ℓ (10.2 lb/10^3 gal)

Vapor recovery systems are available for compressing and recycling gaseous emissions from tanks.

6. EPA Source Classification Code - None exists

7. References -

(1) Eckerson, B. A. and A. L. Johnson, "Natural Gas and Natural Gas Liquids", Surface Operations in Petroleum Production, George V. Chilingar and Carrol M. Beeson, eds., New York, American Elsevier Publishing Co., Inc., 1969.

(2) Nack, H. et al., Development of an Approach to Identification of Emerging Technology and Demonstration Opportunities, EPA 650-2-74-048, Columbus, Ohio, Battelle-Columbus Labs., 1974.

(3) Environmental Protection Agency, Compilation of Air Pollutant Emission Factors, 2nd. ed., AP-42, Research Triangle Park, N. C., 1973.

SECONDARY AND TERTIARY RECOVERY TECHNIQUES

When a producing well decreases its production it is either plugged and its production stopped, or stimulated so that production will be increased. The problems causing loss of production fall into three major areas. One major problem, loss of formation pressure, is solved by displacement processes. A second problem, low permeability of the formation, occurs when the formation is packed so tightly that the oil cannot flow through it. This is corrected by an acid treatment or by fracturing to increase the permeability. The third major problem occurs when the oil is too thick, or viscous, to flow easily. The viscosity of oil depends strongly on temperature, however, and when the oil is heated, the viscosity drops so that the oil can flow easily. These four methods of treatment, displacement, fracturing, acid treatment, and thermal treatment, are discussed in this section.

Displacement

1. Function - After reservoir pressures have dropped, the displacement method is used to increase production by injecting water or gas into the formation under pressure. In 1968, an estimated 33% of the oil production in the United States was by water flooding, and it has been further projected that by 1980 this figure will rise to 50%.

   In water flooding, water is injected into the formation under pressure via an injection well. Production water may be used, but it must first be treated to prevent corrosion and chemical deposits from occurring in pipes or machinery.

   In gas injection, gas is injected under high pressure via the injection wells to displace the crude out into the production well. The gas supply is often production gas.

2. Input Materials - Not applicable

3. Operating Parameters -

   . Pressure - often about 1.8×10^4 kg/m^2 (25 psi) + formation pressure, but variable.

   Phillips Petroleum Co., at their North Sea Ekofisk field complex, injects up to 1.4×10^7 m^3 (5×10^8 cu ft.) per day of gas at 6.5×10^6 kg/m^2 (9200 psi), but this is an unusually high pressure.

   Shell Co., at their Ventura field waterflood program, uses a four plant system with a 3.5×10^4 cu m/day (220,000 b/d) capacity at injection pressures of $1.4 - 3.5 \times 10^6$ kg/m^2 (2000-5000 psi).

4. Utilities - At Ekofisk, Phillips Petroleum uses for compression equipment six units, totalling 82,000 kW (110,000 hp), driven by gas turbines. At the separation plant are two multi-stage compressors, each connected to 7600 kW (10,200 hp) General Electric frame 3, two shaft gas turbines. At the injection platform are four compressors, each driven by a geared GE frame 5 gas turbine rated at 16,000 kW (22,000 hp) each. Main and spare seal oil pumps each require a 186 kW (250 hp) motor.

   At the Shell Co. Ventura field Waterflood Plant 4 (WP-4), two 3400 kW (4500 hp) electric motor driven double cased diffuser centrifugal pumps are used to give a designed capacity of 9500 cu m/day (60,000 b/d) at 3.5×10^6 kg/sq m (5000 psi). At WP-2, eight 447 kW (600 hp) vertical quintuplex plunger pumps give a designed capacity of 9500 cu m/day (60,000 b/d) at 2.8×10^6 kg/sq m (4000 psi).

5. Waste Streams - None

6. EPA Source Classification Code - None exists

7. References -

(1) "Pioneering Ekofisk System to Inject Gas at 9200 psi", Petroleum Engineer International, Vol. 46, No. 2, February, 1974, pp. 32-34, 36.

(2) Blanton, M. L. "Shell Extends Ventura Flood to 5000 psi", Petroleum Engineer International, Vol. 46, No. 9, August, 1974, pp. 24-26.

(3) Petroleum Extension Service Industrial and Business Training Bureau, A Primer of Oil Well Drilling, Austin, Texas (1975).

Fracturing

1. Function - The fracturing technique is used to increase production of oil from sandstone by increasing the permeability of the formation. This is done by forcing a sand and fluid suspension into the formation under high pressure, literally cracking it open. After the formation has been opened, the fluid is pumped out, leaving the sand to hold the cracks open. This process increases the permeability of the formation, enabling oil and gas to flow into the well.

2. Input Material - Usually a sand and fluid suspension. In three wells in West Texas, for example, the following input materials were used.

   Well A, Crocket County, Texas: 9.5 cu m (2500 gal) LPG-CO_2 as pad volume, then 130 cu m (34,000 gal) 1:1:1 Gas Frac fluid containing 11,000 kg (24,000 lb) of 20-40 mesh sand, then flushed with 9.5 cu m (2500 gal) 1:1:1 Gas Frac fluid with no sand.

   Well B, Sutton County, Texas: 7.6 cu m (2000 gal) LPG-CO_2 pad volume, 85 cu m (22,500 gal) 1:1:1 Gas Frac fluid containing 900 kg (2000 lbs) 40-60 mesh sand and 10,000 kg (22,800 lbs) 20-40 mesh sand, then flushed with LPG-CO_2 mixture.

   Well C, McCullough County, Texas: 17 cu m (4500 gal) LPG-CO_2 mixture pad volume, 53 cu m (14,000 gal) 1:1:1 Gas Frac fluid containing 7000 kg (15,000 lbs) 20-40 mesh sand, flushed with 17 cu m (4500 gal) LPG-CO_2 mixture.

3. Operating Parameters -

   . Pressure - variable

   For example, in three West Texas wells mentioned above the following pressures were used:

   Well A - Average injection rate 3 cu m/min (19 bbl/min) at 3.5×10^6 kg/sq m

   Well B - Average injection rate 2 cu m/min (12.5 bbl/min) at 2.1×10^6 kg/sq m

   Well C - Average injection rate 1.9 cu m/min (12 bbl/min) at 8.4×10^5 kg/sq m

4. Utilities - Power for compressors

5. Waste Streams - The danger of groundwater contamination exists if the casing fractures, or if the formation forms a communication with a water bearing formation.

6. EPA Source Classification Code - None exists

7. References -

(1) Hurst, Robert E., "Designing Successful Gas Frac Treatments", Petroleum Engineer International, Vol. 45, No. 7, July, 1972, pp. 67 ff.

(2) Petroleum Extension Service Industrial and Business Training Bureau, A Primer of Oil Well Drilling, Austin, Texas (1975).

Acid Treatment

1. Function - Acid treatment is used to increase production by increasing the porosity of carbonate rock formations. In the process, quantities of acid ranging from fifty to thousands of gallons are pumped into the well under pressure. The acid then travels out into the formation, dissolving the rock to allow the oil to travel into the well more easily.

2. Input Materials - HCl and sometimes other acids. An example of a mixture might be 12% HCl with 3% HF. Proposed acid volume: if 28% HCl is used, 1.5 times the volume contained within the fracture between the well bore and maximum acid penetration distance; if 15% HCl is used, three times the fracture volume. Increasing acid concentration from 15-28% HCl increases penetration distance. At 93°C (200°F), dolomite formation distance can be increased from 38 to 54 m (127 to 178 ft.) by using 28% HCl instead of 15%.

3. Operating Parameters - Pressure is approximately 1.8×10^4 kg/sq m (25 psi) + formation pressure. The temperature at which the acid reaction occurs affects the depth of acid penetration. For example, an increase in temperature 38 to 140°C (100 to 220°F) could decrease penetration for 15% HCl from 37 to 25 m (120 to 82 ft.) in limestone and from 87 to 37 m (285 to 120 ft.) in dolomite. Similarly, a pad that would reduce the reaction temperature of 28% HCl in a dolomite treatment from 140 to 66°C (220 to 150°F) would increase the penetration distance from 54 to 67 m (177 to 220 ft.).

   Increased injection rate increases acid penetration, but at rates greater than approximately 0.5 cu m/min/m (1.0 bbl/min/ft.), penetration distance approaches a maximum.

4. Utilities - Power for compressors

5. Waste Streams - The corrosive nature of the fluid used causes an increased possibility that casings may fracture and allow groundwaters to become contaminated.

6. EPA Source Classification Code - None exists

7. References

(1) Petroleum Extension Service Industrial and Business Training Bureau, A Primer of Oil Well Drilling, Austin, Texas (1975).

(2) Williams, B. B., and D. E. Nierode, "Design of Acid Fracturing Treatments", Journal of Petroleum Technology, Vol. 24, July, 1972, pp. 849-859.

Thermal Treatment

1. Function - Thermal treatment increases production by heating the oil through processes such as steam injection, hot water injection, and in situ combustion. The heat reduces the viscosity of the oil so that it can flow more easily.

   Hot water and steam injection heat the oil by direct contact and also displace the oil, causing higher flow rates.

   In situ combustion is accomplished by pumping air down the hole and then setting fire to the oil. This process burns 5-10% of the oil, causing temperatures as high as 1,500°C and increasing production from 10% to more than four times primary production levels.

2. Input Materials -

   For hot water injection - heated water

   For steam injection - steam from on site boiler, about 0.8-0.95 quality

   For in situ combustion - air

3. Operating Parameters - For steam or hot water injection, the temperature used depends on the properties of the oil in the formation. The pressure used also varies, but will generally be 1.8 - 2.1 kg/m^2 (25-30 psi) greater than the formation pressure for all the thermal processes. For example, CIA Shell de Venezuela uses average well-head steam injection pressures of 6.7 - 7.0 x 10^5 kg/m^2 (950-1000 psi) from their high-pressure plant and 5 - 6 x 10^5 kg/m^2 (700-800 psi) from their low pressure plant, at a temperature of 260°C (500°F), while Amoco Production in Winkleman Dome, Fremont County, Wyoming, uses a normal injection pressure of 8.1 x 10^5 kg/sq m (1150 psi).

4. Utilities - For in situ combustion, compressors for injecting air are needed. For steam and hot water injection, power for compressors and boilers is required; for example, for their steam project at Lombardi, Mobil uses approximately 79 cu m of fuel oil, or crude, for each 1000 cu m of steam generated (80 bbl/1000 bbl steam). For a rate of 3000 cu m (20,000 bbl) steam/day, fuel consumption is around 254 cu m/day (1600 b/d).

Amoco Production at Winkleman Dome uses one steam generator rated at 9000 kg/hr (20,000 lb/hr) and two at 10,000 kg/hr (22,000 lb/hr), for a total capacity equivalent to 664 cu m water/day (4180 bw/d).

5. Waste Streams - Fugitive emissions from boilers and compressors.

6. EPA Source Classification Code - None exists

7. References -

(1) Bleakly, W. B., "Mobile Eyes Steaming Success at San Ardo", Oil and Gas Journal, Vol. 71, No. 52, December 24, 1973, pp. 40-43.

(2) Giusti, Luis E., "CSV Makes Steam Soak Work in Venezuela Field", Oil and Gas Journal, Vol. 72, No. 44, November 4, 1974, pp. 88-93.

(3) "Winkleman Dome Steam-Drive Project Expands", Oil and Gas Journal, Vol. 72, No. 42, October 21, 1974, pp. 114-120.

(4) Smith, C. R., Secondary Oil Recovery, Reinhold Publishing Co., New York (1966).

(5) Petroleum Extension Service Industrial and Business Training Bureau, A Primer of Oil Well Drilling, Austin, Texas (1975).

APPENDIX A

CHARACTERISTICS OF U. S. CRUDE OILS

Table A-1. PROPERTIES OF UNITED STATES CRUDE OILS

State Field	Gravity, °API	Sulfur, wt. per cent	Viscosity, SUS at 100°F
Alabama			
Citronelle (Rodessa, L. Cre.)	43.6	0.38	40
Alaska			
Swanson River (Hemlock, Eoc.)	29.7	0.16	61
Arkansas			
Magnolia (Reynolds-Smackover, Jur.)	38.4	0.90	38
Midway (Smackover, Jur.)	36.6	1.36	42
Schuler (Jones & Cotton Valley, Jur.)	32.8	1.55	52
Smackover (U. Cre.)	22.5	2.10	220
California			
Belgian Anticline (Oceanic, Olig.)	35.0	0.59	40
Belridge, South (Tulare, Plio.-Pleist.)	15.0	0.23	2,440
Brea Olinda (Mio.)	24.0	0.75	135
Buena Vista (27-B Basal Etchegoin, Plio.)	30.6	0.59	46
Castaic Junction (Zone 10, Mohnian, Mio.)	19.0	3.40	1,230
Cat Canyon, West (Los Flores, Mio.)	17.5	5.07	3,000
Coalinga, East (Main Gatchell, Eoc.)	28.8	0.31	67
Coalinga Nose (Gatchell, Eoc.)	31.5	0.25	48
Coalinga, West (Temblor, Mio.)	20.2	0.55	195
Coles Levee, North (Mio.)	34.0	0.39	43
Coyote, West (Emery, Repetto, Plio.)	32.3	0.82	50
Cuyama, South (Dibblee, Mio.)	32.5	0.42	49
Cymric (McKittrick Group, Tulare, Plio.-Pleist.)	12.7	1.16	6,000
Dominguez (Plio.-Mio.)	29.9	0.40	60
Edison (Chanac. Jur.)	25.2	0.20	115
Elk Hills (Shallow, U. Plio.)	22.8	0.68	135
Fruitvale (Chanac, Plio.-Mio.)	17.5	0.93	1,750
Gosford, East (Middle & Lower-Stevens, Mio.)	34.0	0.57	51
Greeley (Rio Bravo-Vedder, Mio.)	37.2	0.31	41
Guijarral Hills (Leda, Olig.)	36.8	0.63	40
Honor Rancho (Wayside, U. Mio.)	37.6	0.40	37
Huntington Beach (S. Main area, Mio.)	22.6	1.57	210
Inglewood (Vickers, L. Mio.)	18.1	2.50	680
Kern Front (Chanac, Plio.-Mio.)	14.8	0.85	5,100
Kern River (Kern River, Plio.-Pleist.)	12.6	1.19	6,000
Kettleman North Dome (Temblor, Mio.)	34.0	0.40	44
Long Beach (Alamitos, Repetto, Plio.)	22.6	1.29	208
Midway-Sunset (Plio.-Pleist.)	21.6	0.89	210
Montalvo, West (Colonia, Sespe, Olig.)	17.3	4.10	7,648
Mount Poso (Vedders, L. Mio.)	16.0	0.68	1,900
Newhall-Potrero (Modelo, Mio.)	32.7	0.56	46
Oxnard (McInnes, Sespe, Olig.)	25.7	1.72	95
Richfield (Kraemer, Mio.)	22.6	1.86	230
Rincon (Plio.)	28.2	1.40	80
Rio Bravo (Rio Bravo, Mio.)	38.6	0.35	38
Russell Ranch (Dibblee, Vaqueros, Mio.)	35.2	0.35	43
San Ardo (Lombardi, Mio.)	11.1	2.25	6,000
San Emidio Nose (Reef Ridge, Mio.)	29.7	0.83	59
Sansinena (Mio.)	28.6	0.87	63
Santa Fe Springs (Buckbee, Plio.)	32.8	0.33	47
Santa Maria Valley (Monterey, Mio.)	14.7	4.99	6,000
Seal Beach (McGrath, Mio.)	31.7	0.55	52
South Mountain (Sespe, Olig.)	23.3	2.79	220
Tejon, North (Zemorrian, 1-R, Mio.)	40.0	0.16	35
Torrance (Del Amo, Mio.)	23.8	1.84	160
Ventura (Pico-Repetto, Plio.)	31.3	0.94	56
Wheeler Ridge (Eoc.)	37.0	0.29	38
Wilmington (Harbor area, Terminal, Mio.)	22.3	1.33	210
Colorado			
Adena (Dakota "J", Cre.)	44.7	<0.10	36
Rangely (Weber, Penn.)	34.8	0.56	48
Wilson Creek (Morrison, Jur.)	48.1	0.12	33

Source: From Petroleum Processing Handbook edited by W. F. Bland and R. L. Davidson, Copyright © 1967 by McGraw-Hill, Inc. Used by permission of McGraw-Hill Book Company.

Table A-1 (Continued). PROPERTIES OF UNITED STATES CRUDE OILS

State Field	Gravity, °API	Sulfur, wt. per cent	Viscosity, SUS at 100°F
Illinois			
Clay City (Miss.)	38.6	0.19	43
Dale (Aux Vases, Miss.)	36.4	0.15	49
Lawrence (Bridgeport, Penn.)	35.6	0.21	46
Loudon (Bethel, Miss.)	36.2	0.22	45
New Harmony (McClosky, Miss.)	36.0	0.23	45
Robinson-Stoy (Robinson, Penn.)	37.4	0.20	44
Salem (Aux Vases, Miss.)	37.2	0.17	43
Indiana			
Griffin (Cypress, Miss.)	35.2	0.20	47
Kansas			
Bemis-Shutts (U. Arbuckle, Ord.)	34.6	0.57	52
Chase-Silica (Kansas City, Penn.)	38.8	0.44	42
El Dorado (Admire, Perm.)	36.8	0.18	43
Hall-Gurney (Kansas City, Penn.)	39.4	0.34	43
Kraft-Prusa (Pre-Cambrian)	43.0	0.27	38
Seely-Wick (Bartlesville, Penn.)	41.1	0.23	38
Spivy-Grabs (Miss.)	23.5	0.93	84
Trapp (Arbuckle, Ord.)	39.2	0.41	41
Louisiana			
Avery Island (U. Mio.)	34.4	0.12	46
Bateman Lake (9900′, U. Mio.)	38.2	0.15	41
Bay de Chene (Mio.)	33.6	0.27	52
Bay Marchand (3900′ Mio.)	20.2	0.46	270
Bay St. Elaine (U. Mio.)	33.6	0.39	49
Bayou Sale (Morin, Mio.)	36.2	0.16	44
Black Bay, West (7300′, Mio.)	30.0	0.27	57
Black Bay, West (8050′, Mio.)	23.0	0.36	140
Black Bay, West (8300′, Mio.)	30.6	0.26	58
Black Bay, West (8650′, Mio.)	34.4	0.18	45
Black Bay, West (9100′, Mio.)	35.2	0.17	43
Black Bay, West (9200′, Mio.)	34.4	0.19	46
Caddo (Annona Chalk, U. Cre.)	36.8	0.37	44
Caillou Island (No. 70, Mio.)	35.4	0.23	45
Cameron, West (Block 45, U. Mio.)	39.2	<0.10	41
Cote Blanche Bay, West (U. Mio.)	33.6	0.16	49
Cotton Valley (Bodcaw, Jur.)	40.6	<0.10	46
Cox Bay (Mio.)	31.9	0.38	56
Delhi (Tuscaloosa, U. Cre.)	41.7	<0.10	39
Delta Farms (Mio.)	35.6	0.26	44
Duck Lake (U. Mio.)	36.4	0.14	44
Erath (Mio.)	31.0	0.20	54
Eugene Island (Block 32, 7500′, Mio.)	39.2	<0.10	39
Eugene Island (Block 126, Mio.)	36.2	0.19	52
Eugene Island (Block 188, 9080′, Mio.)	27.1	0.35	91
Garden Island Bay (Mio.)	34.8	0.22	49
Golden Meadow (Mio.)	37.6	0.18	44
Grand Bay (Mio.)	35.0	0.31	48
Grand Isle (Block 16, B-1, Seg. E, Plio.)	36.4	0.18	40
Grand Isle (Block 18, B-2, Plio.)	34.6	0.22	46
Grand Isle (Block 47, Plio.-Mio.)	33.6	0.23	56
Hackberry, West (U. Mio.)	31.3	0.29	45
Krotz Springs (Frio, Olig.)	54.9	<0.10	34
Lafitte (Mio.)	36.2	0.30	45
Lake Barre (R-1, Mio.)	40.4	0.14	39
Lake Pelto (U. Mio.)	34.6	0.21	45
Lake Salvador (Mio.)	35.4	0.14	47
Lake Washington (Mio.)	28.2	0.37	82
Leeville (U. Mio.)	35.4	0.20	45
Little Lake (Eggerella 2, Mio.)	32.1	0.27	58
Little Lake (Eggerella 4, Mio.)	32.5	0.28	61
Little Lake (Textularia Panamensis 1, Mio.)	31.7	0.27	59
Little Lake (Textularia Panamensis 2, Mio.)	36.2	0.15	46
Little Lake (Textularia Panamensis 6, Mio.)	46.3	<0.10	34

Table A-1 (Continued). PROPERTIES OF UNITED STATES CRUDE OILS

State Field	Gravity, °API	Sulfur, wt. per cent	Viscosity, SUS at 100°F
Little Lake, South (Textularia Panamensis 1 "D", Mio.)	34.8	0.26	49
Main Pass (Block 69, Mio.)	30.6	0.25	61
Paradis (Paradis, Mio.)	36.0	0.23	41
Quarantine Bay (Mio.)	31.9	0.27	52
Romere Pass (Mio.)	37.4	0.30	44
Ship Shoal (Block 154, Mio.)	29.1	0.36	78
South Pass (Block 24, Mio.)	32.3	0.26	51
Timbalier Bay (Mio.)	34.4	0.33	43
Venice (Mio.)	37.6	0.24	41
Weeks Island (Mio.)	33.2	0.19	51
West Bay (Mio.)	32.1	0.27	54
West Delta (Block 30, Mio.)	27.0	0.33	92
West Delta (Block 53, KE, U. Mio.)	32.3	0.43	66
West Delta (Block 83, KE, U. Mio.)	35.0	0.37	48
Michigan			
Albion (Trenton-Black River, Ord.)	41.9	0.10	44
Mississippi			
Baxterville (L. Tuscaloosa, U. Cre.)	17.1	2.71	1,480
Brookhaven (L. Tuscaloosa, L. Cre.)	35.0	0.43	50
Bryan (Rodessa, L. Cre.)	37.2	1.47	47
Heidelberg (U. Tuscaloosa, U. Cre.)	23.3	3.75	370
Little Creek (L. Tuscaloosa, U. Cre.)	38.0	0.16	43
Raleigh (Hosston, L. Cre.)	45.8	0.43	58
Soso (11,701 Bailey, Rodessa, L. Cre.)	41.1	0.89	41
Tinsley (Selma, U. Cre.)	30.4	1.02	79
Montana			
Cabin Creek (Mission Canyon, Miss.)	33.4	0.60	47
Cut Bank (Cut Bank, L. Cre.)	39.0	0.85	38
Pine (Dev.)	33.8	0.36	55
Poplar East (Madison, Miss.)	39.6	0.32	38
Sumatra (Amsden, Penn.)	29.5	0.65	72
New Mexico			
Bisti (Gallup, Cre.)	37.6	0.18	40
Caprock, East (Wolfcamp, Perm.)	43.2	0.17	35
Denton (Dev.)	46.0	0.17	35
Eunice-Monument (Grayburg, Perm.)	28.8	0.97	54
Gladiola (Wolfcamp, Perm.)	42.1	0.10	35
Hobbs (San Andres, Perm.)	37.4	1.41	41
Jalmat (Yates, Perm.)	36.2	1.22	47
Kemnitz (Wolfcamp, Perm.)	36.4	0.12	35
Langlie-Mattix (Queen, Perm.)	28.9	1.65	64
Lovington (Abo, Perm.)	39.4	0.36	36
Maljamar (Perm.)	38.6	0.70	37
Saunders (Wolfcamp, Perm.)	41.7	0.11	34
Vacuum (San Andres, Perm.)	35.0	0.95	42
Verde-Gallup (Mancos, Cre.)	39.6	0.12	39
North Dakota			
Antelope (Miss.)	42.8	<0.10	32
Beaver Lodge-Tioga (Mission-Canyon, Ord.)	46.0	0.23	34
Blue Butte (Madison, Miss.)	41.1	0.52	34
Tioga (Madison, Miss.)	41.3	0.31	35
Oklahoma			
Bradley (Springer, Penn. & Cunningham, Miss.)	35.0	0.22	56
Burbank (Layton, Penn.)	39.6	0.24	43
Cement (U. Melton, Penn.)	33.2	0.47	56
Cushing (Bartlesville, Penn.)	42.1	0.22	38
Eola-Robberson (Bromide, M. Ord.)	39.8	0.35	41
Eola-Robberson (Oil Creek, L. Ord.)	38.0	0.27	42
Glenpool (Glenn, Penn.)	37.4	0.31	42
Golden Trend			
Antioch, Southwest (Gibson, Miss.)	42.1	0.11	39

Table A-1 (Continued): PROPERTIES OF UNITED STATES CRUDE OILS

State Field	Gravity, °API	Sulfur, wt. per cent	Viscosity, SUS at 100°F
Elmore, Northeast (Gibson, Miss.)	42.1	0.14	38
New Hope, Southeast (Gibson, Miss.)	41.1	0.19	41
Panther Creek (Penn.)	46.5	0.14	37
Healdton (Healdton, Penn.)	28.9	0.92	110
Hewitt (Lone Grove, Pre-Cam.)	37.0	0.65	49
Joiner City (Bois D'Arc, Sil.-Dev.)	40.4	0.47	40
Knox (Dornick Hills, Penn.)	43.0	<0.10	37
Naval Reserve (Burbank, Penn.)	39.8	0.25	42
Oklahoma City (Wilcox, Ord.)	37.6	0.16	45
Sho-Vel-Tum District			
Camp (Springer, Penn.)	28.0	1.41	115
Fox-Graham (Springer, Penn.)	36.0	0.57	49
Milroy (Deese, Penn.)	30.0	1.73	100
Sholem Alechem (Springer, Penn.)	26.8	1.44	150
Tatums (Deese, Penn.)	21.0	1.68	550
Velma (L. Dornick Hills, Springer, Penn.)	29.1	1.36	87
Pennsylvania			
Bradford (U. Dev.)	41.1	0.11	44
Texas			
Anahuac (Marg. No. 1, Olig.)	33.2	0.23	48
Andector (Ellen, Cam.-Ord.)	43.2	0.22	38
Andrews (Penn.)	39.0	0.11	41
Andrews (Wolfcamp, Perm.)	36.8	0.78	40
Andrews, North (Dev.)	44.3	0.30	37
Andrews, North (Ellen, Cam.-Ord.)	45.2	0.11	37
Andrews, South (Dev.)	44.7	<0.10	36
Andrews, South (Wolfcamp, Perm.)	36.8	0.10	49
Bakke (Dev.)	44.7	0.16	37
Bakke (Ellen, Cam.-Ord.)	45.6	0.21	<32
Bakke (Penn.)	39.4	<0.10	40
Bakke (Wolfcamp, Perm.)	37.4	0.41	40
Bethany (4300' Glen Rose, L. Cre.)	41.5	0.23	41
Block 31 (Dev.)	44.5	0.18	35
Borregos (F-5, Frio, Olig.)	42.1	<0.10	35
Borregos (L-5, Frio, Olig.)	40.6	<0.10	36
Borregos (N-21, Frio, Olig.)	42.3	<0.10	35
Borregos (R-13, Vicksburg, Olig.)	38.2	<0.10	37
Borregos, South (R-5, Frio, Olig.)	39.0	<0.10	35
Cogdell area (Canyon Reef, Penn.)	41.7	0.38	37
Conroe (Cockfield, Eoc.)	37.0	<0.10	36
Cowden, North (Grayburg, Perm.)	30.4	1.89	51
Cowden Deep (San Andres, Perm.)	36.6	0.96	42
Cowden, South (Grayburg, Perm.)	34.6	1.77	44
Darst Creek (Buda, L. Cre.)	36.6	0.76	49
Darst Creek (Edwards, L. Cre.)	36.8	0.78	46
Diamond "M" (Canyon Reef, Perm.)	45.4	0.20	35
Dollarhide (Clear Fork, Perm.)	37.4	0.42	43
Dollarhide (Dev.)	38.2	0.57	41
Dollarhide (Ellen., Cam.-Ord.)	41.5	0.23	40
Dollarhide (Sil.)	41.3	0.36	39
Dollarhide, East (Ellen., Cambro-Ord.)	42.3	0.10	40
Dune (Grayburg, Perm.)	29.7	3.11	57
East Texas (Woodbine, U. Cre.)	37.4	0.25	42
Emma (Dev.)	45.6	<0.10	36
Emma (Ellen., Cam.-Ord.)	49.2	<0.10	35
Emma (Grayburg-San Andres, Perm.)	49.0	<0.10	35
Emperor, Deep (Seven Rivers, Queen, Perm.)	35.6	1.11	45
Fairway (James, L. Cre.)	45.6	0.24	33
Fort Chadbourne (Odem, Penn.)	44.1	0.24	37
Foster (Grayburg, Perm.)	34.2	1.53	44
Fuhrman-Mascho (Grayburg, Perm.)	31.3	2.06	47
Fullerton (Clear Fork, Perm.)	39.6	0.47	40
Fullerton (Dev.)	41.5	0.32	38
Fullerton, South (Wolfcamp, Perm.)	43.4	0.17	36

Table A-1 (Continued). PROPERTIES OF UNITED STATES CRUDE OILS

State Field	Gravity, °API	Sulfur, wt. per cent	Viscosity, SUS at 100°F
Gillock (Hudgings, Frio, Olig.)	45.2	<0.10	34
Gillock, South (Frio, Olig.)	38.0	0.11	38
Goldsmith (5600′, U. Clear Fork, Perm.)	38.0	0.52	46
Goldsmith (Clear Fork-Tubb, Perm.)	38.0	0.57	44
Goldsmith (Dev.)	40.9	0.16	40
Goldsmith (San Andres, Perm.)	38.4	1.16	40
Goldsmith, East (Holt, Perm.)	36.4	0.15	59
Goldsmith, North (Ellen, Cam.-Ord.)	37.0	0.58	44
Goldsmith, West (U. Clear Fork, Perm.)	37.4	0.53	44
Goldsmith, West (Ellen., Cam.-Ord.)	42.6	0.32	39
Goldsmith, West (Fusselman, Sil.)	37.4	0.96	43
Goldsmith, West (San Andres, Perm.)	34.4	1.38	43
Goose Creek (Frio, Olig.)	35.0	0.13	42
Hastings (Marginulina, Olig.)	31.5	0.15	48
Hastings, East (Frio, Olig.)	31.0	0.15	55
Hastings, West (Frio, Olig.)	30.2	0.17	58
Hawkins (Eagle Ford, U. Cre.)	26.8	2.19	135
Headlee (Dev.)	47.4	<0.10	37
Headlee (Ellen., Cam.-Ord.)	51.1	<0.10	35
High Island (Mio.)	27.3	0.26	79
Howard-Glasscock (Yates, Perm.)	30.6	1.18	61
Hull (Caprock, Mio.)	31.1	0.35	41
Jameson (Strawn, Penn.)	40.9	<0.10	34
Jameson (Strawn Reef, Penn.)	44.3	<0.10	36
Jo-Mill (Spraberry, Perm.)	37.4	0.11	43
Jordan (Ellen., Cam.-Ord.)	43.1	0.28	38
Jordan (San Andres, Perm.)	33.2	1.48	46
Kelly-Snyder (Canyon Reef, Penn.)	39.8	0.22	37
Kelsey (Frio, Olig.)	40.6	0.13	35
Kelsey, South (18-A, Frio, Olig.)	43.4	<0.10	34
Kermit (Ellen., Cam.-Ord.)	41.9	0.19	39
Kermit (Yates and Seven Rivers, Perm.)	36.6	0.94	42
Kermit, South (Dev.)	32.3	0.79	81
Keystone-Colby (Queen, Perm.)	34.2	0.95	48
Keystone-Devonian (Dev.)	32.7	0.69	68
Keystone-Ellenburger (Ellen., Cam.-Ord.)	42.1	0.13	40
Keystone-Holt (San Angelo, Perm.)	37.8	0.63	43
Keystone-Silurian (Sil.)	35.4	0.49	51
KMA (Strawn, Penn.)	40.0	0.31	39
Lake Pasture (FT-569, Frio-Sinton, Olig.)	37.2	0.13	35
Lake Pasture (H-440, Greta, Olig.)	23.7	0.20	60
Levelland (San Andres, Perm.)	31.1	2.12	48
Liberty, South (EY, Olig.)	36.4	0.14	40
Luling-Branyon (Edwards, L. Cre.)	28.6	0.86	90
Magutex (Dev.)	40.2	0.30	38
Magutex (Ellen., Cam.-Ord.)	46.9	0.12	39
McElroy (Grayburg, Perm.)	31.5	2.37	53
Means (Grayburg, Perm.)	30.0	2.40	54
Means (Queen, Perm.)	35.6	1.11	46
Means, East (Strawn, Penn.)	43.0	0.10	35
Midland Farms (Ellen., Cam.-Ord.)	50.6	<0.10	34
Midland Farms (Grayburg, Perm.)	31.7	2.04	46
Midland Farms (Wolfcamp, Perm.)	39.6	0.13	40
Midland Farms, North (Grayburg, Perm.)	30.0	2.37	53
Midland Farms, Northeast (Ellen., Cam.-Ord.)	49.2	<0.10	38
Old Ocean (Armstrong, Frio, Olig.)	36.8	0.14	43
Old Ocean (Chenault, Frio, Olig.)	25.4	0.21	71
Panhandle (Moore County, Perm.)	40.4	0.55	47
Pegasus (Ellen., Cam.-Ord.)	53.0	<0.10	33
Pegasus (Penn.)	45.4	<0.10	36
Pegasus (Spraberry, Perm.)	35.6	0.17	48
Penwell (Ellen., Cam.-Ord.)	41.7	0.24	40
Penwell (San Andres, Perm.)	33.2	1.69	45
Pierce Junction (Frio, Olig.)	37.2	0.12	39
Plymouth (6100′, Frio, Olig.)	42.3	0.12	34
Plymouth (Frio, Olig.)	40.6	0.13	37

Table A-1 (Continued). PROPERTIES OF UNITED STATES CRUDE OILS

State Field	Gravity, °API	Sulfur, wt. per cent	Viscosity, SUS at 100°F
Plymouth (Greta, Frio, Olig.)	23.5	0.19	55
Plymouth (Main Greta, Frio, Olig.)	28.8	0.15	44
Portilla (7100′, Frio, Olig.)	40.4	<0.10	34
Portilla (7300′, Frio, Olig.)	39.8	<0.10	36
Portilla (7400′, Frio, Olig.)	39.6	0.14	35
Portilla (8100′, Frio, Olig.)	39.0	0.12	35
Prentice (6700′, Clear Fork, Perm.)	25.9	2.60	54
Prentice (Glorieta, Perm.)	28.6	2.68	47
Quitman (Eagle Ford, U. Cre.)	26.3	2.06	145
Quitman (Sub-Clarksville, U. Cre.)	16.2	3.64	3,700
Quitman (Trinity, L. Cre.)	43.8	0.92	39
Robertson (L. Clear Fork, Perm.)	34.0	1.31	44
Robertson (San Angelo-Clear Fork, Perm.)	29.9	1.95	49
Robertson, North (7100′, Clear Fork, Perm.)	34.8	0.79	44
Russell (6100′ Glorieta, Perm.)	32.7	1.20	40
Ryssell (7000′ Clear Fork, Perm.)	34.6	1.23	39
Russell, North (Dev.)	40.2	0.31	37
Salt Creek (Canyon, Penn.)	36.8	0.63	41
Sand Hills (Ellen., Cam.-Ord.)	37.0	0.73	45
Sand Hills (McKnight, San Andres, Perm.)	31.7	3.33	45
Sand Hills (Tubb, Perm.)	36.8	0.92	42
Scarborough (Yates, Perm.)	34.0	1.00	47
Seeligson (Zone 14-B, Frio, Olig.)	41.5	<0.10	34
Seeligson (Zone 19-B, Frio, Olig.)	41.3	<0.10	35
Seeligson (Zone 19-C, Frio, Olig.)	41.9	<0.10	34
Seeligson (Zone 20, Frio, Olig.)	40.2	<0.10	34
Seeligson (Zone 21-D, Frio, Olig.)	41.5	0.12	36
Seminole (San Andres, Perm.)	33.6	1.86	43
Seminole, West (San Andres, Perm.)	31.7	2.27	45
Shafter Lake (Dev.)	38.6	0.77	40
Shafter Lake (San Andres, Perm.)	37.4	0.25	46
Sharon Ridge (1700′ San Andres, Perm.)	27.1	2.04	58
Sharon Ridge (2400′ San Angelo, Perm.)	28.2	1.71	49
Sharon Ridge (Clear Fork, Perm.)	29.1	1.67	49
Shipley (Queen, Perm.)	36.0	1.34	41
Slaughter (San Andres, Perm.)	31.1	2.04	48
Spraberry Trend area (Spraberry, Perm.)	35.0	0.18	48
Taft (Frio, Olig.)	21.6	0.21	85
Talco (Trinity, L. Cre.)	20.5	3.00	520
Thompson (3600′, Mio.)	23.8	0.25	140
Thompson, North (Vicksburg, Olig.)	36.4	0.11	46
Thompson, South (Mio.)	25.7	0.20	64
Tijerina-Canales-Blucher (Frio, Olig.)	40.5	<0.10	35
Tom O'Connor (Frio, Olig.)	34.8	0.17	39
TXL (Dev.)	38.6	0.50	41
TXL (Ellen., Cam.-Ord.)	42.3	0.21	39
TXL (San Andres, Perm.)	30.8	1.93	49
TXL (Tubb, Perm.)	36.4	0.54	47
University-Block 9 (Dev.)	44.7	<0.10	36
University-Block 9 (Penn.)	36.4	0.12	45
University-Block 9 (Wolfcamp, Perm.)	37.0	0.57	39
Van (Woodbine-Dexter, U. Cre.)	35.4	0.82	51
Waddell (Grayburg, Perm.)	33.6	1.69	46
Walnut Bend (Hudspeth, Strawn, Penn.)	46.0	0.23	38
Walnut Bend (U. Strawn, Penn.)	44.1	0.17	38
Walnut Bend (Winger, L. Strawn, Penn.)	31.0	0.86	77
Ward-Estes, North (Yates, Perm.)	34.0	1.17	45
Ward, South, (Yates, Perm.)	35.8	1.12	42
Wasson (San Andres, Perm.)	32.8	1.76	43
Wasson 66 (Clear Fork, Perm.)	31.9	1.40	44
Wasson 72 (Clear Fork, Perm.)	33.2	1.01	42
Webster (Marginulina, Frio, Olig.)	29.3	0.21	64
Welch (San Andres, Perm.)	32.3	2.14	45
West Columbia ("Z," Frio, Olig.)	28.0	0.23	65
West Columbia New (Frio, Olig.)	28.6	0.19	63
West Ranch (41-A, Frio, Olig.)	31.5	0.17	41

Table A-1 (Continued). PROPERTIES OF UNITED STATES CRUDE OIL

State Field	Gravity, °API	Sulfur, wt. per cent	Viscosity, SUS at 100°F
West Ranch (98-A, Frio, Olig.)	39.8	0.11	35
West Ranch (Glassock, Frio, Olig.)	31.0	0.13	41
West Ranch (Greta, Olig.)	24.9	0.16	57
West Ranch (Ward, Frio, Olig.)	30.8	0.15	40
White Point, East (5900' Greta, Olig.)	27.3	0.13	44
White Point, East (5600' Brigham, Frio, Olig.)	38.4	0.13	35
Yates (San Andres, Perm.)	30.2	1.54	59
Utah			
Aneth (Hermosa, Penn.)	40.4	0.20	38
McElmo Creek (Paradox, Penn.)	40.0	<0.10	37
Ratherford (Paradox, Penn.)	41.3	<0.10	37
White Mesa (Paradox, Penn.)	41.1	0.10	36
Wyoming			
Beaver Creek (Steele, U. Cre.)	33.8	0.20	48
Big Muddy (Frontier, U. Cre.)	35.8	0.12	47
Big Sand Draw (Tensleep, Penn.)	34.2	1.35	43
Bonanza (Thermopolis, U. Cre.)	35.8	1.87	37
Byron (Tensleep, Penn.)	24.3	2.50	140
Cottonwood (Phosphoria, Perm.)	28.6	2.52	63
Coyote Creek (Minnelusa, Penn.)	40.9	<0.10	36
Donkey Creek (Dakota, L. Cre.)	39.4	0.12	37
Elk Basin (Frontier, U. Cre.)	43.2	<0.10	35
Four Bear (Madison, Miss.)	13.8	3.58	6,000
Frannie (Tensleep, Penn.)	27.5	2.43	66
Garland (Amsden, Penn.)	22.0	2.88	180
Glenrock (Dakota, L. Cre.)	34.4	0.16	35
Grass Creek (Frontier, U. Cre.)	44.5	<0.10	35
Grieve (L. Cre.)	38.2	<0.10	42
Hamilton Dome (Tensleep, Penn.)	22.6	2.98	230
Little Buffalo Basin (Phosphoria, Perm.)	20.7	3.31	340
Lost Soldier (Cam.)	35.2	1.23	41
Meadow Creek (Sussex, U. Cre.)	38.8	0.12	39
Murphy Dome (Tensleep, Penn.)	34.0	1.70	43
Oregon Basin (Embar-Tensleep-Madison, Perm.-Penn.-Miss.)	20.5	3.25	360
Salt Creek (Wall Creek, U. Cre.)	36.6	0.12	43
Steamboat Butte (Tensleep, Penn.)	28.2	2.18	66
Sussex (Lakota, L. Cre.)	39.0	0.37	38
Werts (Tensleep, Penn.)	33.6	1.32	43
Winkleman Dome (Phosphoria, Perm.)	25.7	2.59	93

[1]Geologic age names are abbreviated as follows: Cambrian, Cam.; Cambro-Ordovician, Cam.-Ord.; Cretaceous, Cre.; Lower Cretaceous, L. Cre.; Upper Cretaceous, U. Cre.; Devonian, Dev.; Upper Devonian, U. Dev.; Eocene, Eoc.; Jurassic, Jr.; Miocene, Mio.; Lower Miocene, L. Mio.; Upper Miocene, U. Mio; Mississippian, Miss.; Oligocene, Olig.; Ordovician, Ord.; Lower Ordovician, L. Ord.; Middle Ordovician, M. Ord.; Pennsylvania, Penn.; Permian, Perm.; Pliocene, Plio.; Pliocene-Miocene, Plio.-Mio.; Pliocene-Pleistocene, Plio.-Pleist.; Upper Pliocene, U. Plio.; Silurian, Sil.; Pre-Cambrian, Pre-Cam.

Table A-2. TRACE ELEMENT CONTENT OF UNITED STATES CRUDE OILS

State and Field	Trace Element, ppm V	Ni	Fe	Ba	Cr	Mn	Mo	Sn	Hg	Analytical Method	Year
ALABAMA											
Toxey	9	14								Emission spectroscopy	1971
Toxey	10	16								Emission spectroscopy	1971
ALASKA											
Kuparuk, Prudhoe Bay	32	13								Emission spectroscopy	1971
Kuparuk, Prudhoe Bay	28	12								Emission spectroscopy	1971
McArthur River, Cook Inlet	nd	nd								Emission spectroscopy	1971
Prudhoe Bay	31	11								Emission spectroscopy	1971
Put River, Prudhoe Bay	16	6								Emission spectroscopy	1971
Redoubt Shoal, Cook Inlet	nd	4								Emission spectroscopy	1971
Trading Bay, Cook Inlet	nd	nd								Emission spectroscopy	1971
ARKANSAS											
Brister, Columbia	nd	nd								Emission spectroscopy	1971
El Dorado, East	12	11								Emission spectroscopy	1971
Schuler	15.2	10.3	1.2	<1	<1	<1	nd	nd		Emission spectroscopy	1961
Smackover	nd	4								Emission spectroscopy	1971
Stephens-Smart	18.5	22.7	6.3	<1	<1	<1	nd	<1		Emission spectroscopy	1961
Tubal, Union	nd	nd								Emission spectroscopy	1971
West Atlanta	<1	<1	<1	<1	<1	<1	nd	nd		Emission spectroscopy	1961
CALIFORNIA											
Ant Hill	14.3	66.5	28.5	<1	<1	nd	nd	nd		Emission spectroscopy	1961
Arwin	9.0	28.0								Emission spectroscopy	1956
Bradley Sands	134.5	--								(1)	1958
Cat Canyon	128	75								Emission spectroscopy	1971
Cat Canyon	209	102								Emission spectroscopy	1971
Coalinger	5.1	21.9	5.1	<1	<1	<1	<1	nd		Emission spectroscopy	1961
Coal Oil Canyon	6.0	20.0								Emission spectroscopy	1956
Coles Levee	11.0	31.0								Emission spectroscopy	1956
Coles Levee	2.2	21.6	2.2	<1	<1	nd	<1	nd		Emission spectroscopy	1961
Cuyama	10.0	32.0								Emission spectroscopy	1956
Cymric	30.0	43.0								Emission spectroscopy	1956
Cymric	0.8	2.3	2.0							Emission spectroscopy	1961
Cymric									2.6 2.4 1.9	Emission spectroscopy	1961
Cymric	0.6	1.1	2.0							Emission spectroscopy	1961
Cymric									21.0 14.0 2.9	Emission spectroscopy	1961
Cymric	1.0	2.0	2.0							Emission spectroscopy	1961
Edison	6.0	11.0								Emission spectroscopy	1956
Elk Hills	8.3	38.5	38.5	<1	<1	<1	<1	nd		Emission spectroscopy	1961
Elwood South	nd	11								Emission spectroscopy	1971
Gibson	37	125								X-ray fluorescence	1969
Gots Ridge	188	80								Emission spectroscopy	1971
Helm	14.0	27.0								Emission spectroscopy	1956
Helm	2.5	10.5	2.5	<1	<1	nd	nd	<1		Emission spectroscopy	1961
Huntington Beach	29	104								Emission spectroscopy	1971
Inglewood	125.7	125.7	125.7	<1	1.3	nd	<1	nd		Emission spectroscopy	1961
Kettleman	34.0	35.0	24.0							Colorimetric	1952
Kettleman Hills	11.0	24.0								(1)	1958
Las Flores	106.5	--								(1)	1958
Lompoc	37.6	--								(1)	1958
Lompoc	199	90								Emission spectroscopy	1971
Lost Hills	39.0	8.0								Emission spectroscopy	1956
Midway	82.6	82.6	82.6	1.8	1.8	<1	<1	nd		Emission spectroscopy	1961
Nicolai	246.5	--								(1)	1958
North Belridge	--	107								X-ray fluorescence (inter. std)	1959
North Belridge	--	80								Colorimetric	1959
North Belridge	--	83								Emission spectroscopy	1959
North Belridge	23	83								X-ray fluoresc. (ext. std.)	1960
Orcutt	162.5	--								(1)	1958
Oxnard	403.5	--								(1)	1958
Purisma	218.5	--								(1)	1958
Raisin City	8.0	21.0								Emission spectroscopy	1956

Table A-2 (Continued). TRACE ELEMENT CONTENT OF UNITED STATES CRUDE OILS

State and Field	Trace Element, ppm V	Ni	Fe	Ba	Cr	Mn	Mo	Sn	As	Analytical Method	Year
Rio Bravo	--	2.2								X-ray fluorescence (int. std.)	1962
Rio Bravo	--	--	2.6							X-ray fluorescence (int. std.)	1960
Rio Bravo	--	--	2.5							Emission spectroscopy	1960
Russell Ranch	12.0	26.0								Emission spectroscopy	1956
San Joaquin	44.8	--								(1)	1958
Santa Maria	223	97	17							Colorimetric	1952
Santa Maria	202	--								(1)	1958
Santa Maria	180	106								Emission spectroscopy	1956
Santa Maria	280	130								Emission spectroscopy	1960
Santa Maria Valley	207	97								Emission spectroscopy	1971
Santa Maria Valley	240	--								X-ray fluorescence (int. std.)	1960
Santa Maria Valley	280	--								X-ray fluorescence (int. std.)	1960
Santa Maria Valley	174	174	1.7	<1	1.7	<1	4.0	nd		Emission spectroscopy	1961
Signal Hill	28	--								(1)	1958
Signal Hill	25	57								Emission spectroscopy	1956
Tejon Hills	64	44								Emission spectroscopy	1956
Ventura	42	51								Emission spectroscopy	1956
Ventura	49	33	31							Colorimetric	1952
Ventura Avenue	25.2	--								(1)	1958
Wheeler Ridge	7	1.9								Emission spectroscopy	1956
Wilmington	43	61								Emission spectroscopy	1956
Wilmington	41	46	28							Colorimetric	1952
Wilmington	53	51								Emission spectroscopy	1971
Wilmington	--	53								X-ray fluorescence (int. std.)	1959
Wilmington	--	60								X-ray fluorescence (int. std.)	1959
Wilmington	46	60								Emission spectroscopy	1960
Wilmington	36.0	84	36	3.6	<1	nd	1	nd		Emission spectroscopy	1961
COLORADO											
Badger Creek	<1	<1	<1	<1	<1	<1	<1	<1		Emission spectroscopy	1961
Badger Creek	<1	<1	<1	<1	nd	<1	<1	<1		Emission spectroscopy	1961
Gramps	<1	<1	<1	<1	<1	<1	<1	<1		Emission spectroscopy	1961
Gramp	<1	<1	<1	<1	<1	<1	<1	<1		Emission spectroscopy	1961
Hiawatha	<1	<1	<1	<1	<1	<1	nd	<1		Emission spectroscopy	1961
Moffat Dome	<1	<1	<1	<1	<1	<1	<1	<1		Emission spectroscopy	1961
Rangely	2.7	<1	<1	<1	<1	<1	nd	<1		Emission spectroscopy	1961
Rangely	<1	<1	6.6	<1	<1	<1	<1	<1		Emission spectroscopy	1961
Rangely	<1	<1	2.7	<1	<1	<1	<1	<1		Emission spectroscopy	1961
Seep	0.24	4.70								Emission spectroscopy	1956
White River Area	<1	<1	96.0	<1	<1	2.2	nd	2.2		Emission spectroscopy	1961
FLORIDA											
Jay	nd	1								Emission spectroscopy	1971
ILLINOIS											
Loudon	1.22	0.62	0.57							Emission spectroscopy	1952
Loudon	0.56	--								(1)	1958
KANSAS											
Brewster	2.1	1.3	<1	<1	<1	nd	nd	nd		Emission spectroscopy	1961
Brewster	<1	3.9	<1	<1	<1	<1	nd	nd		Emission spectroscopy	1961
Brock	1	2.4	10.2	<1	<1	<1	<1	nd		Emission spectroscopy	1961
Coffeyville	3.8	1.2	7.2	<1	<1	<1	<1	<1		Emission spectroscopy	1961
Cunningham	44.2	9.9	<1	<1	<1	<1	nd	nd		Emission spectroscopy	1961
Cunningham	24.0	24.0	<1	<1	<1	<1	nd	nd		Emission spectroscopy	1961
Iola	15.6	9.0	3.9	2	<1	<1	nd	nd		Emission spectroscopy	1961
Iola	4.5	4.5	<1	<1	<1	<1	nd	nd		Emission spectroscopy	1961
"Kansas-1"	--	>5							<.021	Emission spectroscopy	1966
"Kansas-2"	--	>21							<.08	Emission spectroscopy	1966
McLouth	<1	6.3	<1	<1	<1	<1	<1	nd		Emission spectroscopy	1961
Otis Albert	21.3	6.0	<1	<1	<1	<1	<1	nd		Emission spectroscopy	1961
Otis Albert	39.0	9.1	9.1	<1	<1	<1	<1	<1		Emission spectroscopy	1961
Pawnee Rock	12.3	3.4	<1	<1	<1	<1	nd	nd		Emission spectroscopy	1961
Rhodes	145	--								X-ray fluorescence (int. std.)	1960
Rhodes	165	--								Emission spectroscopy	1960
Rhodes	133	--								X-ray fluorescence (int. std.)	1960
Rhodes	--	36								X-ray fluorescence (int. std.)	1960
Rhodes	--	38								Emission spectroscopy	1960
Rhodes	--	32								X-ray fluorescence (int. std.)	1959
Solomon	30	7	<1	<1	<1	<1	nd	nd		Emission spectroscopy	1961

Table A-2 (Continued). TRACE ELEMENT CONTENT OF UNITED STATES CRUDE OILS

State and Field	Trace Element, ppm V	Ni	Fe	Ba	Cr	Mn	Mo	Sn	As	Analytical Method	Year
LOUISIANA											
Bay Marchard	nd	2								Emission spectroscopy	1971
Colquitt, Clairborne	nd	nd								Emission spectroscopy	1971
Colquitt, Clairborne	nd	nd								Emission spectroscopy	1971
Colquitt, Clairborne (Smackover B)	nd	nd								Emission spectroscopy	1971
Delta (West) Offshore, Block 117	nd	2								Emission spectroscopy	1971
Delta (West) Block 27	nd	2								Emission spectroscopy	1971
Delta (West) Block 41	nd	2								Emission spectroscopy	1971
Eugene Island, Offshore, Block 276	4	nd								Emission spectroscopy	1971
Eugene Island, Offshore, Block 238	nd	nd								Emission spectroscopy	1971
Lake Washington	nd	4								Emission spectroscopy	1971
Main Pass, Block 6	nd	3								Emission spectroscopy	1971
Main Pass, Block 41	nd	1								Emission spectroscopy	1971
Olla	<1	5.56	0.07							Emission spectroscopy	1952
Ship Shoal, Offshore, Block 176	nd	nd								Emission spectroscopy	1971
Ship Shoal, Offshore, Block 176	nd	nd								Emission spectroscopy	1971
Ship Shoal, Block 208	nd	2								Emission spectroscopy	1971
Shongaloo, N. Red Rock	nd	nd								Emission spectroscopy	1971
South Pass, Offshore, Block 62	nd	4								Emission spectroscopy	1971
Timbalier, S., Offshore, Block 54	nd	nd								Emission spectroscopy	1971
MICHIGAN											
Trent	—	0.23								Emission spectroscopy	1956
MISSISSIPPI											
Baxterville, Lamar and Marion	40	15								Emission spectroscopy	1971
Heidelberg	15.35	6.02	1.78							Emission spectroscopy	1952
Mississippi	--	.7							<.003	Emission spectroscopy	1966
Tallhalla Creek, Smith	nd	nd								Emission spectroscopy	1971
Tallhalla Creek, Smith	nd	nd								Emission spectroscopy	1971
Tallhalla Creek, Smith (Smackover)	nd	nd								Emission spectroscopy	1971
Tingley, Yazoo	7	5								Emission spectroscopy	1971
MONTANA											
Bell Creek	nd	2								Emission spectroscopy	1971
Big Wall	24	13.2		<1	<1	<1	<1	nd		Emission spectroscopy	1961
Soap Creek	132	13.2		<1	<1	<1	<1	nd		Emission spectroscopy	1961
NEW MEXICO											
Rattlesnake	<1	<1	<1	<1	<1	<1	<1	nd		Emission spectroscopy	1961
Rattlesnake	<1	<1	<1	<1	<1	<1	<1	nd		Emission spectroscopy	1961
Table Mesa	<1	<1	9.9	<1	<1	<1	<1	<1		Emission spectroscopy	1961
OKLAHOMA											
Allurve (Novata)	<1	<1	1.4	6.0	<1	<1	<1	<1		Emission spectroscopy	1961
Allurve (Novata)	1.1	1.2	51.0	11.9	<1	<1	nd	<1		Emission spectroscopy	1961
Allurve (Novata)	<1	6.0	1.4	6.0	<1	<1	<1	<1		Emission spectroscopy	1961
Bethel	—	0.21								Emission spectroscopy	1956
Burbank	nd	nd								Emission spectroscopy	1971
Cary	0.15	0.65								Emission spectroscopy	1956
Chelsea (Novata)	1.4	1.4	27.0	6.3	<1	<1	nd	nd		Emission Spectroscopy	1961
Chelsea (Novata)	<1	<1	6.0	<1	<1	<1	<1	<1		Emission Spectroscopy	1961
Chelsea (Novata)	<1	<1	<1	3.0	<1	<1	nd	<1		Emission Spectroscopy	1961
Cheyarha	0.32	0.70								Emission spectroscopy	1956
Cheyarha	0.34	0.95								Emission spectroscopy	1956
Cheyarha	0.21	0.36								Emission spectroscopy	1956
Cheyarha	0.36	4.10								Emission spectroscopy	1956
Cromwell	0.23	0.80								Emission spectroscopy	1956
Cromwell	0.11	0.23								Emission spectroscopy	1956
Cromwell	0.10	0.23								Emission spectroscopy	1956
Cromwell	--	0.27								Emission spectroscopy	1956
Cromwell	0.10	0.42								Emission spectroscopy	1956
Cromwell	--	0.23								Emission spectroscopy	1956
Dill	0.23	2.10								Emission spectroscopy	1956
Dover, Southeast	nd	nd								Emission spectroscopy	1971
Dustin	—	0.36								Emission spectroscopy	1956
E. Lindsay	--	0.10								Emission spectroscopy	1956
E. Seminole	0.23	0.46								Emission spectroscopy	1956
E. Yeager	--	0.12								Emission spectroscopy	1956
Fish	--	0.23								Emission spectroscopy	1956
Glen Pool	--	--	5.0							X-ray fluorescence (int. std.)	1960

Table A-2 (Continued). TRACE ELEMENT CONTENT OF UNITED STATES CRUDE OILS

State and Field	Trace Element, ppm V	Ni	Fe	Ba	Cr	Mn	Mo	Sn	Analytical Method	Year
Grief Creek	0.10	0.42							Emission spectroscopy	1956
Hawkins	2.10	8.50							Emission spectroscopy	1956
Hawkins	0.72	3.50							Emission spectroscopy	1956
Horns Corner	--	0.70							Emission spectroscopy	1956
Katie	0.17	0.52							Emission spectroscopy	1956
Katie	0.48	1.60							Emission spectroscopy	1956
Katie	0.29	1.00							Emission spectroscopy	1956
Katie	0.24	1.00							Emission spectroscopy	1956
Kendrick	<1	<1	<1	<1	<1	<1	nd	nd	Emission spectroscopy	1961
Konawa	0.10	0.65							Emission spectroscopy	1956
Laffoon	44.0	20.2	1.5	<1	<1	<1	nd	nd	Emission spectroscopy	1961
Little River	0.17	1.10							Emission spectroscopy	1956
Middle Gilliland	<1	<1	<1	<1	<1	<1	nd	nd	Emission spectroscopy	1961
Naval Reserve	<1	<1	<1	<1	<1	<1	nd	nd	Emission spectroscopy	1961
New England	<1	<1	<1	nd	<1	<1	nd	nd	Emission spectroscopy	1961
N. Dill	0.13	1.45							Emission spectroscopy	1956
N. E. Castle Ext.	0.29	1.50							Emission spectroscopy	1956
N. E. Elmore	0.15	0.60							Emission spectroscopy	1956
N. E. Elmore	0.17	0.70							Emission spectroscopy	1956
N. Okemah	0.11	0.70							Emission spectroscopy	1956
N. W. Horns Corner	—	0.10							Emission spectroscopy	1956
Olympia	0.88	2.40							Emission spectroscopy	1956
Osage City	2.9	1.6	6.9	nd	<1	<1	nd	nd	Emission spectroscopy	1961
S. W. Maysville	1.36	2.10							Emission spectroscopy	1956
S. W. Maysville	0.25	1.10							Emission spectroscopy	1956
Tatums	—	57							X-ray fluorescence	1959
Tatums	--	56							Emission spectroscopy	1959
Tatums	148	71							X-ray fluorescence (ext. std.)	1960
Weleetka	--	0.10							Emission spectroscopy	1956
W. Holdenville	0.13	0.46							Emission spectroscopy	1956
W. Wewoka	0.14	0.42							Emission spectroscopy	1956
Wewoka	--	0.15							Emission spectroscopy	1956
Wewoka Lake	0.33	0.95							Emission spectroscopy	1956
Wewoka Lake	0.15	0.30							Emission spectroscopy	1956
Wewoka Lake	0.18	0.27							Emission spectroscopy	1956
Wildhorse	2.6	1	<1	nd	nd	<1	nd	nd	Emission spectroscopy	1961
Wynona	<1	<1	1.8	<1	<1	<1	nd	<1	Emission spectroscopy	1961
Wynona	<1	<1	<1	<1	nd	<1	nd	<1	Emission spectroscopy	1961
TEXAS										
Anahuac	0.2	1.1	—						Emission spectroscopy	1958
Brantley-Jackson, Hopkins	nd	nd	--						Emission spectroscopy	1971
Brantley-Jackson, Smackover	nd	nd	—						Emission spectroscopy	1971
Conroe	0.008	<1	0.81						Chemical (V); emission (Ni)	1952
East Texas	4	3	--						Emission spectroscopy	1971
East Texas	1.2	0.88	0.51						Emission spectroscopy	1952
East Texas	1.05	1.69	—						Colorimetric	1952
East Texas	1.2	1.7	3.2						Colorimetric	1952
Edgewood, Van Zandt	nd	nd	--						Emission spectroscopy	1971
Finley	2.6	2	5.7	<1	<1	<1	<1	<1	Emission spectroscopy	1961
Jackson	0.9	1.8	4.4						Colorimetric	1952
Lake Trammel, Nolan			—						Emission spectroscopy	1971
Mirando	1.4	1.9	7.6						Colorimetric	1952
Panhandle, Carson	8	3	--						Emission spectroscopy	1971
Panhandle, Hutchinson	6	5	--						Emission spectroscopy	1971
Panhandle, West Texas	8.4	—	--						(1)	1952
Refugio	0.68	0.70	0.34						Chemical	1952
Refugio, Light	0.56	—	—						(1)	1958
Salt Flat	8.3	1.43	1.71						Chemical	1952
Scurry County	0.8	1.0	3.4						Colorimetric	1952
Sweden	0.8	0.6	--						Emission spectroscopy	1958
Talco	8.8	2.57	2.06						Chemical	1952
Talco	6.16	--	--						(1)	1958
Wasson	15	nd	--						Emission spectroscopy	1971
West Texas	23	5	--						X-ray fluoresc. spectro. (ext. std.) or emission spectroscopy	1960
West Texas	6.7	--	--						(1)	1952
West Texas	6.3	--	--						Emission spectroscopy	1956
West Texas	11.8,	3.8	--						Emission spectroscopy	1958
West Texas	8.5	4.2							Emission spectroscopy	1958
West Texas	8.96	--	--						(1)	1958
West Texas	7.9	4.8	5.1						Colorimetric	1952
West Texas (Imogene)	8.5	1.73	0.88						Chemical	1952
Yates-Pecos	7.8	2.6	0.11						Chemical	1952

Table A-2 (Continued). TRACE ELEMENT CONTENT OF UNITED STATES CRUDE OILS

State and Field	Trace Element, ppm								Analytical Method	Year
	V	Ni	Fe	Ba	Cr	Mn	Mo	Sn		
UTAH										
Duchesne	<1	<1	3.9	3.9	<1	<1	<1	<1	Emission spectroscopy	1961
Duchesne	<1	<1	1.4	<1	<1	<1	<1	<1	Emission spectroscopy	1961
Duchesne County	<1	12.3	12.3	2.9	<1	<1	nd	nd	Emission spectroscopy	1961
Red Wash	nd	nd	--						Emission spectroscopy	1971
Red Wash	nd	nd	--						Emission spectroscopy	1971
Roosevelt	<1	3.2	<1	<1	<1	<1	<1	<1	Emission spectroscopy	1961
Roosevelt	<1	5.4	<1	<1	<1	<1	<1	nd	Emission spectroscopy	1961
Virgin	14.4	14.4	3.4	<1	<1	<1	nd	<1	Emission spectroscopy	1961
Virgin	8.1	8.1	1.9	<1	<1	<1	nd	<1	Emission spectroscopy	1961
West Pleasant Valley	11.4	57	1140.0	26.6	1.1	11.4	2.7		Emission spectroscopy	1961
Wildcat	0.14	7.5							Emission spectroscopy	1956
WYOMING										
Beaver Creek	nd	nd							Emission spectroscopy	1971
Big Horn Mix	15.97	3.6	0.8						Emission spectroscopy	1952
Bison Basin	1.1	2.7	<1	<1	<1	<1	<1	<1	Emission spectroscopy	1961
Circle Ridge	48	11.2	<1	<1	<1	<1	<1	nd	Emission spectroscopy	1961
Corral Creek	59	11	--						Emission spectroscopy	1971
Crooks Gap	2.1	2.2	1.0	<1	<1	<1	<1	<1	Emission spectroscopy	1961
Dallas	66	15.4	<1	<1	<1	<1	<1	nd	Emission spectroscopy	1961
Dallas	66	66	1.5	<1	<1	<1	<1	nd	Emission spectroscopy	1961
Derby	39	39	<1	<1	<1	<1	<1	nd	Emission spectroscopy	1961
Elk Basin	38	9.2	<1	<1	<1	<1	<1	nd	Emission spectroscopy	1961
Elk Basin	8.4	2	<1	<1	<1	<1	<1	nd	Emission spectroscopy	1961
Garland	36	24	3.6	<1	<1	<1	<1	nd	Emission spectroscopy	1961
Grass Creek	106.4	28.9	1.1	<1	<1	<1	<1	nd	Emission spectroscopy	1951
Half Moon	98.6	27.8	1.7	<1	<1	<1	<1	nd	Emission spectroscopy	1961
Half Moon	50.6	<1	<1	<1	<1	<1	<1	nd	Emission spectroscopy	1961
Hamilton Dome	106.4	26.6	<1	<1	<1	<1	<1	nd	Emission spectroscopy	1961
Hamilton Dome	55.2	8.6	<1	<1	<1	<1	<1	nd	Emission spectroscopy	1961
Hamilton Dome	106.4	24.3	2.7	<1	<1	<1	<1	nd	Emission spectroscopy	1961
Little Mo	83	16	--						Emission spectroscopy	1971
Lost Soldier	<1	<1	<1	<1	<1	<1	<1	<1	Emission spectroscopy	1961
Lost Soldier	<1	<1	<1	<1	<1	<1	<1	<1	Emission spectroscopy	1961
Lost Soldier	<1	<1	<1	<1	<1	<1	<1	<1	Emission spectroscopy	1961
Mitchell Creek	72.0	72.0	7.2	<1	<1	<1	<1	nd	Emission spectroscopy	1961
North Oregon Basin	77.0	22.4	1.0	<1	<1	<1	<1	nd	Emission spectroscopy	1961
North Oregon Basin	72.0	14.8	<1	<1	<1	<1	<1	nd	Emission spectroscopy	1961
North Oregon Basin	60.0	11.5	<1	<1	<1	<1	<1	nd	Emission spectroscopy	1961
Oil Mountain	144.0	33.6	<1	<1	<1	<1	<1	nd	Emission spectroscopy	1961
Pilot Butte	45.0	10.5	<1	<1	<1	<1	<1	nd	Emission spectroscopy	1961
Pilot Butte	24.0	5.6	<1	<1	<1	<1	nd	nd	Emission spectroscopy	1961
Pine Ridge	nd	nd	--						Emission spectroscopy	1971
Prescott No. 3	21.0	7.1	--						(1)	1959
Recluse	nd	nd	--						Emission spectroscopy	1971
Roelis	88	15	--						Emission spectroscopy	1971
Salt Creek	84.0	8.4	<1	<1	<1	<1	nd	nd	Emission spectroscopy	1961
Salt Creek	1.4	1.4	<1	<1	<1	<1	nd	nd	Emission spectroscopy	1961
Salt Creek	<1	<1	23.4	<1	<1	<1	nd	nd	Emission spectroscopy	1961
Salt Creek	<1	3.9	3.9	<1	<1	<1	nd	nd	Emission spectroscopy	1961
Skull Creek	--	0.42							Emission spectroscopy	1956
South Casper Creek	12.9	3.0	<1	<1	<1	<1	<1	nd	Emission spectroscopy	1961
South Fork	21.9	21.9	<1	<1	<1	<1	<1	nd	Emission spectroscopy	1961
South Spring Creek	102.0	102.0	<1	<1	<1	<1	<1	nd	Emission spectroscopy	1961
South Spring Creek	117.0	27.3	<1	<1	<1	<1	<1	nd	Emission spectroscopy	1961
Steamboat Butte	29.1	6.79	<1	<1	<1	<1	<1	nd	Emission spectroscopy	1961
Washakie	74.0	25.0	--						(1)	1934
Winkleman Dome	48.0	11.2	1	<1	<1	<1	<1	nd	Emission spectroscopy	1961

(1) Not specified

nd Sought but not detected.

Source: Magee, E.M., H. J. Hall, and G. M. Varga, Jr., Potential Pollutants in Fossil Fuels, PB 225 039, EPA-R2-73-249, Contract No. 68-02-0629, Linden, J.N., Esso Research and Engineering Co., 1973.

Table A-3. SULFUR AND NITROGEN CONTENT OF THE GIANT U.S. OIL FIELDS

State/Region and Field	Sulfur, Weight Percent	Nitrogen, Weight Percent
ALABAMA		
Citronelle	0.38	0.02
ALASKA		
Granite Point	0.02	0.039
McArthur River	0.16	0.160
Middle Ground Shoal	0.05	0.119
Prudhoe Bay (North Slope)	1.07	0.23
Swanson River	0.16	0.203
APPALACHIAN		
Allegany	0.12	0.028
Bradford	0.11	0.010
ARKANSAS		
Magnolia	0.90	0.02
Schuler and East	1.55	0.112
Smackover	2.10	0.08
CALIFORNIA		
SAN JOAQUIN VALLEY		
Belridge South	0.23	0.773
Buena Vista	0.59	--
Coalinga	0.43	0.303
Coalinga Nose	0.25	0.194
Coles Levee North	0.39	0.309
Cuyama South	0.42	0.337
Cymric	1.16	0.63
Edison	0.20	0.446
Elk Hills	0.68	0.472
Fruitvale	0.93	0.527
Greeley	0.31	0.266
Kern Front	0.85	0.676
Kern River	1.19	0.604
Kettleman North Dome	0.40	0.212
Lost Hills	0.33	0.094
McKittrick - Main Area	0.96	0.67
Midway Sunset	0.94	0.42
Mount Poso	0.68	0.475
Rio Bravo	0.35	0.158
COASTAL AREA		
Carpenteria Offshore	--	--
Cat Canyon West	5.07	0.54
Dos Cuadras	--	--
Elwood	--	--

Table A-3 (Continued). SULFUR AND NITROGEN CONTENT OF THE GIANT U.S. OIL FIELDS

State/Region and Field	Sulfur, Weight Percent	Nitrogen, Weight Percent
Orcutt	2.48	0.525
Rincon	0.40	0.48
San Ardo	2.25	0.913
Santa Ynez***	--	--
Santa Maria Valley	4.99	0.56
South Mountain	2.79	--
Ventura	0.94	0.413
LOS ANGELES BASIN		
Beverly Hills	2.45	0.612
Brea Olinda	0.75	0.525
Coyote East	0.95	0.336
Coyote West	0.82	0.347
Dominguez	0.40	0.360
Huntington Beach	1.57	0.648
Inglewood	2.50	0.640
Long Beach	1.29	0.55
Montebello	0.68	0.316
Richfield	1.86	0.575
Santa Fe Springs	0.33	0.271
Seal Beach	0.55	0.394
Torrance	1.84	0.555
Wilmington	1.44	0.65
COLORADO		
Rangely	0.56	0.073
FLORIDA		
Jay	0.32	0.002
ILLINOIS		
Clay City	0.19	0.082
Dale	0.15	0.080
Loudon	0.27	0.097
New Harmony	0.23	0.158
Salem	0.17	0.102
KANSAS		
Bemis-Shutts	0.57	0.162
Chase-Silica	0.44	0.13
Eldorado	0.18	0.085
Hall-Curney	0.34	0.108
Kraft-Prusa	0.27	0.171
Trapp	0.41	0.076
LOUISIANA		
NORTH		
Black Lake	--	--
Caddo-Pine Island	0.37	0.026
Delhi	0.82	0.053
Haynesville (Ark.-La.)	0.66	0.022
Homer	0.83	0.081
Lake St. John	0.17	--
Rodessa (La.-Tex.)	0.46	0.032

Table A-3 (Continued). SULFUR AND NITROGEN CONTENT OF THE GIANT U.S. OIL FIELDS

State/Region and Field	Sulfur, Weight Percent	Nitrogen, Weight Percent
OFFSHORE		
Bay Marchand Block 2 (Incl. onshore)	0.46	0.11
Eugene Island Block 126	0.15	0.030
Grand Isle Block 16	0.18	0.04
Grand Isle Block 43	--	--
Grand Isle Block 47	0.23	0.04
Main Pass Block 35	0.19	0.071
Main Pass Block 41	0.16	0.025
Main Pass Block 69	0.25	0.098
Ship Shoal Block 208	0.38	0.02
South Pass Block 24 (Incl. onshore)	0.26	0.068
South Pass Block 27	0.18	0.049
Timbalier S. Block 135	0.66	0.088
Timbalier Bay (Incl. onshore)	-- 0.33	-- 0.081
West Delta Block 30	0.33	0.09
West Delta Block 73	--	--
SOUTH, ONSHORE		
Avery Island	0.12	--
Bay De Chene	0.27	0.060
Bay St. Elaine	0.39	0.04
Bayou Sale	0.16	--
Black Bay West	0.19	0.04
Caillou Island (Incl. offshore)	0.23	0.04
Cote Blanche Bay West	0.16	0.033
Cote Blanche Island	0.10	0.01
Delta Farms	0.26	0.055
Garden Island Bay	0.22	0.06
Golden Meadow	0.18	--
Grand Bay	0.31	--
Hackberry East	0.30	0.054
Hackberry West	0.29	--
Iowa	0.20	0.039
Jennings	0.26	--
Lafitte	0.30	--
Lake Barre	0.14	0.02
Lake Pelto	0.21	0.035
Lake Salvador	0.14	0.02
Lake Washington (Incl. offshore)	0.37	0.146
Leeville	0.20	0.019
Paradis	0.23	--
Quarantine Bay	0.27	0.061
Romere Pass	0.30	--
Venice	0.24	--
Vinton	0.34	0.044
Weeks Island	0.19	--
West Bay	0.27	0.071

Table A-3 (Continued). SULFUR AND NITROGEN CONTENT OF THE GIANT U.S. OIL FIELDS

State/Region and Field	Sulfur, Weight Percent	Nitrogen, Weight Percent
MISSISSIPPI		
Baxterville	2.71	0.111
Heidelberg	3.75	0.112
Tinsley	1.02	0.08
MONTANA		
Bell Creek	0.24	0.13
Cut Bank	0.80	0.055
NEW MEXICO		
Caprock and East	0.17	0.034
Denton	0.17	0.014
Empire Abo	0.27	0.014
Eunice	1.14	0.071
Hobbs	1.41	0.08
Maljamar	0.55	0.062
Monument	1.14	0.071
Vacuum	0.95	0.075
NORTH DAKOTA		
Beaver Lodge	0.24	0.019
Tioga	0.31	0.016
OKLAHOMA		
Allen	0.70	0.21
Avant	0.18	--
Bowlegs	0.24	0.140
Burbank	0.24	0.051
Cement	0.47	0.152
Cushing	0.22	0.08
Earlsboro	0.47	--
Edmond West	0.21	0.045
Eola-Robberson	0.35	0.115
Fitts	0.27	--
Glenn Pool	0.31	0.096
Golden Trend	0.15	0.15
Healdton	0.92	0.15
Hewitt	0.65	0.148
Little River	0.28	0.065
Oklahoma City	0.16	0.079
Seminole, Greater	0.30	0.016
Sho-Vel-Tum	1.18	0.27
Sooner Trend	--	--
St. Louis	0.11	0.04
Tonkawa	0.16	0.033

Table A-3 (Continued). SULFUR AND NITROGEN CONTENT OF THE GIANT U.S. OIL FIELDS

State/Region and Field	Sulfur, Weight Percent	Nitrogen, Weight Percent
TEXAS		
DISTRICT 1		
Big Wells	--	--
Darst Creek	0.78	0.075
Luling-Branyon	0.86	0.110
DISTRICT 2		
Greta	0.17	0.038
Refugio	0.11	0.027
Tom O'Connor	0.17	0.038
West Ranch	0.14	0.029
DISTRICT 3		
Anahuac	0.23	0.041
Barbers Hill	0.27	0.06
Conroe	0.15	0.022
Dickison-Gillock	0.82	0.014
Goose Creek and East	0.13	0.028
Hastings E&W	0.20	0.03
High Island	0.26	0.048
Hull-Merchant	0.35	0.081
Humble	0.46	0.097
Liberty South	0.14	0.044
Magnet Withers	0.19	0.033
Old Ocean	0.14	0.029
Raccoon Bend	0.19	0.048
Sour Lake	0.14	0.016
Spindletop	0.15	0.03
Thompson	0.25	0.029
Webster	0.21	0.046
West Columbia	0.21	0.055
DISTRICT 4		
Agua Duke-Stratton	<.1	0.015
Alazan North	0.04	0.014
Borregas	<.1	0.029
Government Wells N.	0.22	0.043
Kelsey	0.13	0.008
La Gloria and South	<.1	0.008
Plymouth	0.15	0.049
Seeligson	<.1	0.015
Tijerina-Canales-Blucher	<.1	0.010
White Point East	0.13	0.02
DISTRICT 5		
Mexia	0.20	0.048
Powell	0.31	0.054
Van and Van Shallow	0.8	0.039

Table A-3 (Continued). SULFUR AND NITROGEN CONTENT OF THE GIANT U.S. OIL FIELDS

State/Region and Field	Sulfur, Weight Percent	Nitrogen, Weight Percent
DISTRICT 6		
East Texas	0.32	0.066
Fairway	0.24	--
Hawkins	2.19	0.076
Neches	0.13	0.083
New Hope	0.46	0.007
Quitman	0.92	0.036
Talco	2.98	--
DISTRICT 7-C		
Big Lake	0.26	0.071
Jameson	<.1	0.034
McCamey	2.26	0.139
Pegasus	0.73	0.200
DISTRICT 8		
Andector	0.22	0.033
Block 31	0.11	0.032
Cowden North	1.89	0.095
Cowden South, Foster, Johnson	1.77	0.127
Dollarhide	0.39	0.074
Dora Roberts	<.1	0.023
Dune	3.11	0.111
Emma and Triple N	<.1	0.025
Fuhrman-Mascho	2.06	0.085
Fullerton	0.37	0.041
Goldsmith	1.12	0.079
Headlee and North	<.1	0.083
Hendrick	1.73	0.094
Howard Glasscock	1.92	0.096
Iatan East	1.47	0.120
Jordan	1.48	0.10
Kermit	0.94	0.092
Keystone	0.57	0.042
McElroy	2.37	0.080
Means	1.75	0.205
Midland Farms	0.13	0.080
Penwell	1.75	0.205
Sand Hills	2.06	0.085
Shafter Lake	0.25	0.041
TXL	0.36	0.067
Waddell	1.69	0.098
Ward South	1.12	0.08
Ward Estes North	1.17	0.107
Yates	1.54	0.150

Table A-3 (Continued). SULFUR AND NITROGEN CONTENT OF THE GIANT U.S. OIL FIELDS

State/Region and Field	Sulfur, Weight Percent	Nitrogen, Weight Percent
DISTRICT 8-A		
Cogdell Area	0.38	0.063
Diamond M	0.20	0.131
Kelly-Snyder	0.29	0.066
Levelland	2.12	0.136
Prentice	2.64	0.117
Robertson	1.37	0.100
Russell	0.77	0.078
Salt Creek	0.57	0.094
Seminole	1.98	0.106
Slaughter	2.09	--
Spraberry Trend	0.18	0.173
Wasson	1.14	0.065
DISTRICT 9		
KMA	0.31	0.068
Walnut Bend	0.17	0.05
DISTRICT 10		
Panhandle	0.55	0.067
UTAH		
Greater Aneth	0.20	0.059
Greater Redwash	0.11	0.255
WYOMING		
Elk Basin (Mont.-Wyo.)	1.78	0.185
Garland	2.99	0.290
Grass Creek	2.63	0.311
Hamilton Dome	3.04	0.343
Hilight	--	--
Lance Creek	0.10	0.055
Lost Soldier	1.21	0.076
Oregon Basin	3.44	0.356
Salt Creek	0.23	0.109

Source: Magee, E.M., H. J. Hall, and G. M. Varga, Jr. Potential Pollutants in Fossil Fuels, PB 225 039, EPA-R2-249, Contract No. 68-02-0629, Linden, N.J., Esso Research and Engineering Co., 1973.

APPENDIX B

GEOGRAPHICAL LOCATION OF OIL AND GAS PRODUCTION ACTIVITIES

Table B-1. PRODUCTION OF CRUDE OIL AND LEASE CONDENSATE BY STATES, 1973

States and Districts	Volume Produced, 1000 bbl[1]
Florida	90
New York	2
Pennsylvania	9
West Virginia	7
DISTRICT I	108
Illinois	84
Indiana	15
Kansas	181
Kentucky	24
Michigan	40
Nebraska	20
North Dakota	55
Ohio	24
Oklahoma	524
South Dakota	1
Tennessee	1
DISTRICT II	969
Alabama	32
Arkansas	49
Louisiana	2278
Mississippi	154
New Mexico	277
Texas	3547
DISTRICT III	6337
Colorado	100
Montana	95
Utah	90
Wyoming	389
DISTRICT IV	674

Table B-1 (Continued). PRODUCTION OF CRUDE OIL AND LEASE CONDENSATE BY STATES, 1973

States and Districts	Volume Produced, 1000 bbl[1]
Alaska	198
Arizona	2
California	921
Nevada	-
DISTRICT V	1121
Total U.S.	9209

[1] Volumes in thousands of 42 gallon barrels.
1 gallon = 3.785 liters.

Source: Annual Statistical Review, Petroleum Industry Statistics, 1965-1974. Washington, D.C., American Petroleum Institute, 1975.

Table B-2. PRODUCTION OF NATURAL GAS BY STATES, 1973.

State	Total Production, Million SCF[1]
Alabama	36
Alaska	612
Arizona	1
Arkansas	437
California	1,407
Colorado	387
Florida	93
Illinois	4
Indiana	1
Kansas	2,458
Kentucky	171
Louisiana	23,264
Maryland	1
Michigan	125
Mississippi	323
Missouri	--
Montana	167
Nebraska	13
New Mexico	3,352
New York	12
North Dakota	138
Ohio	256
Oklahoma	5,177
Pennsylvania	215
South Dakota	--

Table B-2 (Continued). PRODUCTION OF NATURAL GAS BY STATES, 1973.

State	Total Production, Million SCF[1]
Tennessee	1
Texas	25,452
Utah	215
Virginia	14
West Virginia	572
Wyoming	1,033
TOTAL U. S.	65,937

[1]Volumes in millions of standard cubic feet.
1scf = 0.0267 normal cubic meters

Source: Annual Statistical Review, Petroleum Industry Statistics, 1965-1974. Washington, D. C., American Petroleum Institute, 1975.

Table B-3. LOCATION OF LARGE DOMESTIC OILFIELDS

State & Field	1974 Prod.[1] 10000 bbl	Cum. Prod.[1] 1000 bbl	Est. Reserves[1] 1000 bbl	Est. No Wells
ALABAMA				
Citronelle	4,866	112,122	37,877	416
ALASKA				
Granite Point	4,233	56,131	34,321	25
McArthur River	39,191	253,387	136,748	52
Middle Ground Shoal	9,033	87,695	97,000	33
Prudhoe Bay	2,181	6,674	10-20 million	3
Swanson River	9,741	154,297	51,197	42
APPALACHIAN				
Allegany	400	166,400	1,415	2,100
Bradford	2,600	658,695	19,774	17,300
ARKANSAS				
Magnolia	446	152,870	7,130	56
Schuler and East	613	105,736	4,264	108
Smackover	2,860	508,507	21,493	2,611
CALIFORNIA				
SAN JOAQUIN VALLEY				
Belridge South	8,544	194,803	77,900	2,667
Buena Vista	4,003	617,240	32,427	1,137
Coalinga	6,483	632,959	65,887	2,219
Coalinga Nose	3,504	432,473	30,959	74
Coles Levee North	1,218	140,848	12,766	116
Cuyama South	1,471	208,617	11,002	135
Cymric	2,919	131,500	24,405	746
Edison	1,206	113,339	12,500	527
Elk Hills	789	283,788	1,031,000	93
Fruitvale	1,016	101,817	11,400	349
Greeley	677	107,973	3,100	47
Kern Front	3,235	134,691	30,300	952
Kern River	26,765	635,757	850,000	4,531
Kettleman North Dome	643	452,104	3,756	129
Lost Hills	2,165	119,092	21,700	1,149
McKittrick	6,538	206,314	43,022	952
Midway Sunset	4,920	1,197,423	420,191	6,027
Mount Poso	2,527	168,357	20,620	498
Rio Bravo	170	113,139	1,731	48
COASTAL AREA				
Cat Canyon East and West	6,064	174,126	48,100	590
Dos Cuadras	14,990	102,488	73,247	123
Elwood	40	103,266	479	12
Orcutt	1,776	148,789	13,035	176
Rincon	3,319	123,549	20,209	312
San Ardo	12,877	274,160	103,800	913
Santa Ynez*		- 1-3 million -		
Santa Maria Valley	3,558	159,363	26,612	214
South Mountain	1,640	130,617	16,142	441
Ventura	11,393	793,393	88,500	809
LOS ANGELES BASIN				
Beverly Hills	4,656	78,834	31,384	128
Brea Olinda	3,388	343,585	24,212	721
Coyote East	674	98,135	5,300	67
Coyote West	2,143	232,141	18,361	161
Dominguez	1,110	258,272	10,162	131
Huntington Beach	19,035	923,820	118,800	1,118
Inglewood	3,588	296,656	25,100	432
Long Beach	2,598	878,213	20,605	733
Montebello	558	184,500	5,120	178
Richfield	1,476	164,852	16,372	304

Table B-3 (Continued). LOCATION OF LARGE DOMESTIC OILFIELDS

State & Field	1974 Prod.[1] 10000 bbl	Cum. Prod.[1] 1000 bbl	Est. Reserves[1] 1000 bbl	Est. No Wells
Santa Fe Springs	753	600,697	11,218	242
Seal Beach	1,236	187,989	11,900	176
Torrance	2,747	182,332	17,591	364
Wilmington	65,382	1,681,810	697,935	2,335
COLORADO				
Rangely	20,284	513,615	158,379	369
FLORIDA				
Jay	33,166	75,383	237,617	85
ILLINOIS				
Clay City	2,713	307,937	17,063	2,138
Dale	389	100,403	4,597	495
Lawrence	812	362,201	4,600	2,631
Loudon	2,693	363,553	21,447	1,234
Main	870	223,974	2,100	3,101
New Harmony	1,380	155,355	14,645	980
Salem	2,783	355,773	14,227	1,228
KANSAS				
Bemis-Shutts	1,933	218,408	16,592	925
Chase-Silica	1,185	250,429	9,571	1,033
Eldorado	1,085	279,932	10,068	760
Hall-Gurney	1,821	127,244	12,756	1,175
Kraft-Prusa	866	117,824	7,176	590
Trapp	1,332	207,023	12,977	919
LOUISIANA, ONSHORE				
Avery Island	1,252	78,808	31,192	38
Bay DeChene	5,464	74,815	52,165	80
Bay St. Elaine	4,804	143,406	56,494	95
Bayou Sale	2,793	145,141	29,859	91
Black Bay West	7,068	91,538	58,462	145
Calliou Island	18,023	516,898	183,102	361
Cote Blanche Island	6,982	78,996	51,004	58
Delta Farms	916	110,053	9,947	41
Garden Island Bay	8,403	174,829	81,508	249
Golden Meadow	2,256	115,299	19,701	207
Grand Bay	3,934	152,533	52,467	161
Hackberry East	1,753	93,492	16,508	85
Hackberry West	2,944	117,896	22,104	158
Iowa	1,250	92,363	7,637	37
Jennings	280	111,689	3,311	84
Lafitte	5,727	212,532	45,463	244
Lake Barre	4,613	170,632	49,368	119
Lake Pelto	3,110	100,747	34,253	66
Lake Salvador	1,662	75,472	34,528	50
Lake Washington	6,488	198,674	76,326	144
Leeville	2,419	125,226	24,774	92
Paradis	4,057	103,213	26,131	75
Quarantine Bay	3,523	149,648	35,352	122
Romere Pass	2,218	80,347	24,653	37
Timbalier Bay	7,985	234,619	192,126	355
Venice	4,400	158,185	46,815	115
Vinton	2,994	122,886	17,114	177
Weeks Island	6,446	200,175	89,825	82
West Bay	6,679	176,543	63,457	198
W. Cote Blanche Bay	7,880	147,316	102,684	322

Table B-3 (Continued). LOCATION OF LARGE DOMESTIC OILFIELDS

State & Field	1974 Prod.[1] 10000 bbl	Cum. Prod.[1] 1000 bbl	Est. Reserves[1] 1000 bbl	Est. No Wells
LOUISIANA, NORTH				
Caddo-Pine Island	3,348	313,014	26,986	7,370
Delhi	6,583	165,956	44,044	105
Haynesville (Ark., La.)	1,644	171,874	13,126	190
Homer	318	92,227	8,005	153
Rodessa, (La., Tex.)	351	175,474	4,526	145
LOUISIANA, OFFSHORE				
Bay Marchand Blk. 2 (Incl. onshore)	32,632	429,534	220,466	293
Eugene Island Blk. 126	4,429	89,207	35,803	53
Eugene Island Blk. 175	8,059	37,300	82,700	76
Eugene Island Blk. 276	4,687	46,769	118,231	60
Eugene Island Blk. 330	19,747	40,488	190,754	120
Grand Isle Blk. 16	13,156	211,052	138,948	92
Grand Isle Blk. 43	20,999	163,669	206,403	230
Grand Isle Blk. 47	3,972	65,069	34,931	71
Main Pass Blk. 35	2,155	79,768	20,232	77
Main Pass Blk. 41	10,396	144,519	135,481	100
Main Pass Blk. 69	7,973	191,010	68,990	132
Main Pass Blk. 306	5,573	31,942	118,058	134
Ship Shoal Blk. 204	5,732	27,140	77,860	58
Ship Shoal Blk. 207	6,223	44,419	130,581	53
Ship Shoal Blk. 208	10,559	92,506	132,494	86
South Marsh Island Blk. 73	5,020	40,848	64,152	37
South Pass Blk. 24 (Incl. onshore)	15,223	371,476	118,524	436
South Pass Blk. 27	11,568	258,926	126,074	342
South Pass Blk. 62	6,446	48,402	141,598	64
South Pass Blk. 65	10,105	46,193	143,807	62
Timbalier Bay Blk. 21	9,449	159,698	100,111	221
West Delta Blk. 30	22,586	312,462	137,538	216
West Delta Blk. 58	10,035	38,091	111,909	81
West Delta Blk. 73	7,654	128,219	146,781	96
MISSISSIPPI				
Baxterville	6,853	167,013	67,987	198
Heidelberg	5,039	115,229	34,771	263
Tinsley	2,543	196,017	23,983	184
MONTANA				
Bell Creek	9,345	68,819	47,126	228
Cut Bank	3,189	138,439	58,718	839
Pine	2,904	78,601	21,416	112
NEW MEXICO				
Caprock and East	484	92,810	7,190	614
Denton	1,561	124,675	15,325	188
Empire Abo	12,267	111,171	88,829	251
Eunice	4,079	126,215	31,776	806
Hobbs	4,722	221,451	33,232	412
Maljamar	5,854	104,105	60,895	819
Monument	387	210,412	29,588	114
Vacuum	13,152	274,986	125,014	972
NORTH DAKOTA				
Beaver Lodge	3,117	78,510	21,506	138
Tioga	953	56,253	29,480	215
OKLAHOMA				
Allen	2,540	126,921	13,079	1,500
Avant	360	106,602	2,398	645

Table B-3 (Continued). LOCATION OF LARGE DOMESTIC OILFIELDS

State & Field	1974 Prod.[1] 10000 bbl	Cum. Prod.[1] 1000 bbl	Est. Reserves[1] 1000 bbl	Est. No Wells
Bowlegs	1,665	158,492	6,508	175
Burbank	3,685	504,039	36,961	1,070
Cement	1,280	140,236	14,764	1,465
Cushing	2,965	463,182	21,818	1,700
Earlsboro	620	216,424	3,576	200
Edmond West	625	155,147	4,853	450
Eola-Robberson	3,720	107,977	32,023	485
Fitts	2,565	150,873	12,127	635
Glenn Pool	1,980	309,421	10,579	1,035
Golden Trend	8,135	402,011	97,989	1,200
Healdton	7,575	294,240	25,760	1,460
Hewitt	6,595	218,986	31,014	1,180
Little River	330	159,901	5,099	165
Oklahoma City	2,000	733,896	16,104	265
Postle	6,780	70,560	60,102	285
Seminole Greater	1,010	199,456	10,544	255
Sho-Vel-Tum	34,250	1,002,456	247,544	8,040
Sooner Trend	9,810	199,414	50,586	2,975
St. Louis	1,100	216,145	8,855	610
Tonkawa	275	135,212	1,788	205
TEXAS				
District 1				
Darst Creek	1,731	141,384	18,616	864
Luling-Branyon	1,345	147,162	12,838	1,403
District 2				
Greta All	4,476	116,951	43,049	191
Lake Pasture	4,439	65,537	44,112	212
Refugio All	314	95,160	4,840	67
Tom O'Connor	25,667	496,410	203,590	830
West Ranch	14,560	76,469	298,531	624
District 3				
Anahuac	8,949	248,759	106,241	234
Barbers Hill	497	124,529	10,471	100
Conroe	21,737	540,659	134,341	588
Dickinson-Gillock	1,839	107,953	42,047	70
Goose Creek & East	760	130,749	9,251	221
Hastings E&W	27,912	502,991	172,009	439
High Island all	1,204	130,859	19,141	98
Hull-Merchant	1,521	193,909	11,091	385
Humble all	1,473	161,839	28,161	413
Magnet Withers all	3,025	80,931	44,069	286
Old Ocean	577	121,307	8,693	37
Oyster Bayou	5,520	94,837	51,667	35
Raccoon Bend	2,002	91,721	33,279	135
Sour Lake	925	117,386	7,614	334
Spindletop	171	153,741	3,259	72
Thompson all	16,319	370,071	129,929	305
Tomball	2,932	103,647	32,217	216
Webster	24,762	412,958	162,042	148
West Columbia	1,018	157,514	12,486	193
District 4				
Aqua Dulce-Stratton	2,122	138,000	32,000	393
Borregas all	2,072	108,293	26,707	502
Kelsey all	2,125	107,518	42,482	344
Plymouth	802	116,718	8,282	103
Seeligson all	2,453	263,203	61,797	433
Tijerina-Canales-Blucher	3,867	100,528	64,472	182
White Point East	909	99,681	10,319	154
District 5				
Mexia	129	107,353	2,647	97
Powell	92	130,063	937	37
Van and Van Shallow	16,264	419,384	130,616	427

Table B-3 (Continued). LOCATION OF LARGE DOMESTIC OILFIELDS

State & Field	1974 Prod.[1] 10000 bbl	Cum. Prod.[1] 1000 bbl	Est. Reserves[1] 1000 bbl	Est. No Wells
District 6				
East Texas	72,312	4,241,715	1,758,285	13,360
Fairway	13,741	123,703	76,234	97
Hawkins	39,630	535,697	289,303	464
Neches	4,819	60,132	39,868	166
Quitman all	3,360	80,205	29,469	246
Talco	3,773	237,534	32,466	608
District 7-B				
Eastland County	241	120,482	12,410	294
Stephens County	1,877	169,155	18,002	558
District 7-C				
Big Lake	500	124,664	10,336	101
McCamey	794	124,089	5,911	884
Pegasus	2,568	113,008	26,992	181
District 8				
Andector	6,538	128,037	56,963	93
Block 31	6,267	143,861	46,139	120
Cowden North	14,954	276,820	48,180	1,042
Cowden South, Foster Johnson	16,714	299,613	100,387	1,310
Dollarhide	5,843	150,205	59,795	147
Dune	7,448	126,476	73,524	899
Emma & Triple N	1,993	96,694	18,306	259
Fullerton all	6,756	238,417	61,583	579
Goldsmith all	17,431	578,658	96,342	2,761
Hendrick	654	252,215	2,785	196
Howard Glasscock	6,902	310,153	64,847	1,892
Tatan East	4,197	86,412	38,588	873
Jordan	3,426	102,424	27,576	336
Kermit	934	112,374	17,626	469
Keystone	5,101	272,902	47,098	792
McElroy	11,820	309,518	50,482	1,970
Means all	6,644	146,249	63,751	376
Midland Farms all	6,396	176,039	48,961	337
Penwell	1,485	84,967	15,033	472
Sand Hills	5,092	189,105	55,895	1,069
Shafter Lake	2,325	72,033	27,967	436
TLX all	3,656	236,342	28,658	730
Waddell	2,788	81,605	28,395	425
Ward South	546	96,643	3,357	472
Ward Estes North	6,170	310,174	64,826	1,966
Yates	18,192	605,446	994,556	584
District 8-A				
Anton	7,443	78,354	31,646	177
Anton Irish	4,800	73,727	41,112	146
Cogdell Area	10,237	187,918	132,082	386
Diamond M	6,864	197,028	77,972	461
Kelly-Snyder	76,433	616,472	491,640	680
Levelland	12,391	232,508	92,492	1,617
Prentice	5,932	93,846	46,154	308
Russell all	2,697	112,041	22,959	224
Salt Creek	13,093	126,663	103,337	119
Seminole all	20,102	219,347	95,653	375
Slaughter	47,033	595,465	194,535	2,526
Spraberry Trend	18,190	379,633	130,367	3,669
Wasson all	86,784	703,095	629,453	2,117
Welch	6,160	88,531	61,469	391
District 9				
Archer County	2,640	238,970	20,411	4,119
Cooke County	2,106	94,713	18,642	1,981
KMA	2,051	167,376	17,624	899
Walnut Bend	4,711	101,145	38,855	278
Wichita County	4,787	504,852	41,675	6,875
Wilbarger County	1,976	159,717	21,112	1,782
Young County	1,563	142,237	19,666	2,483
District 10				
Panhandle	12,347	1,283,585	131,415	10,268

Table B-3 (Continued). LOCATION OF LARGE DOMESTIC OILFIELDS

State & Field	1974 Prod.[1] 10000 bbl	Cum. Prod.[1] 1000 bbl	Est. Reserves[1] 1000 bbl	Est. No Wells
UTAH				
Greater Altamont	21,898	46,197	228,435	223
Greater Aneth	7,927	259,554	55,558	403
Greater Red Wash	3,364	90,433	46,541	215
WYOMING				
Elk Basin (Wyo.-Mont.)	8,887	448,442	69,759	255
Garland	3,441	112,260	25,863	207
Grass Creek	2,764	140,295	24,605	248
Hamilton Dome	4,454	218,253	35,527	246
Hilight	7,358	48,299	85,552	165
Lance Creek	348	104,632	2,359	44
Lost Soldier	3,425	141,618	23,659	62
Oregon Basin	11,354	240,315	79,651	321
Salt Creek	13,284	542,518	82,113	1,329

[1] Volumes in thousands of 42 gallon barrels. 1 gallon = 3.785 liters.

Source: "Here are the Big U. S. Reserves", Oil and Gas Journ. 73, 116-118 (1975).

Table B-4. NATURAL GAS PROCESSING PLANTS IN THE UNITED STATES, JANUARY, 1972

State County	Total Number of Plants	Total Gas Capacity[1], MMSCFD	Total Gas Throughput[1], MMSCFD
Alabama			
Mobile	1	2.0	1.3
Alaska			
Kenai Burdugh	2	45.0	34.2
Arizona			
Apache	1	2.5	--
Arkansas			
Columbia	1	75.0	40.0
LaFayette	2	71.0	--
California			
Fresno	1	46.0	53.0
Kern	16	833.5	368.7
Kings and Fresno	1	100.0	44.0
Los Angeles	17	404.0	225.9
Orange	5	140.0	73.9
Santa Barbara	7	250.0	115.0
Ventura	6	180.0	60.6
Colorado			
Arapahoe	1	8.0	7.6
LaPlatta	1	300.0	206.4
Logan	1	10.0	6.0
Mesa	1	20.0	14.3
Morgan	3	39.0	16.1
Rio Blanca	4	60.5	34.7
Florida			
Bradford	1	900.0	680.0
Illinois			
Douglas	1	560.0	545.0
Kansas			
Barber	1	30.0	--
Ellsworth	2	1426.0	1360.0
Finney	1	200.0	195.0
Ford	1	25.0	--
Grant	5	1325.0	1246.4
Harper	1	85.0	44.0
Harvey	1	3.0	0.9
Kearney	1	215.0	96.0
Kingman	2	125.0	126.5
Morton	4	217.5	--
Pratt	1	12.0	--
Reno	1	--	--
Rush	1	24.0	24.0
Scott	1	200.0	173.0
Sedgewick	1	130.0	116.0
Seward	4	1350.0	1237.0
Stanton	1	7.0	5.1

Table B-4 (Continued). NATURAL GAS PROCESSING PLANTS IN THE UNITED STATES, JANUARY, 1972

State County	Total Number of Plants	Total Gas Capacity[1], MMSCFD	Total Gas Throughput[1], MMSCFD
Kentucky			
Floyd	1	50.0	50.2
Green	1	925.0	--
Greenup	1	--	--
Louisiana			
Acadia	7	626.0	438.5
Allen	1	24.0	12.6
Ascension	2	--	--
Assumption	3	--	--
Avoyelles	1	7.0	--
Beauregard	3	21.0	17.9
Bossier	5	450.0	90.1
Caddo	1	25.0	--
Calcasieu	6	--	--
Cameron	13	2269.5	--
Claiborne	3	--	76.7
Concordia	1	7.0	3.3
East Baton Rouge	1	8.0	5.0
Evangeline	2	140.0	118.0
Iberia	3	165.0	92.0
Iberville	1	71.0	69.0
Jefferson	1	100.0	76.0
Jefferson Davis	4	425.0	--
Lafayette	1	32.0	33.3
Lafourche	4	211.0	135.0
Lincoln	3	330.0	90.0
Morehouse	1	500.0	500.0
Natchitoches	1	150.0	154.0
Quachita	2	140.0	41.0
Plaquemines	7	2620.0	--
Pointe Coupee	3	130.0	--
Richland	1	15.0	17.4
St. Bernard	4	3165.0	2904.0
St. Charles	2	--	--
St. James	4	75.5	32.8
St. Landry	5	312.0	297.0
St. Martin	6	--	--
St. Mary	8	3436.0	--
Tensas	1	120.0	60.0
Terrebonne	14	2615.5	--
Vermilion	6	2200.0	--
Webster	5	333.5	189.4
North Big Island Field	1	1.5	0.8

Table B-4 (Continued). NATURAL GAS PROCESSING PLANTS IN THE UNITED STATES, JANUARY, 1972

State County	Total Number of Plants	Total Gas Capacity[1], MMSCFD	Total Gas Throughput[1], MMSCFD
Michigan			
Crawford	1	1.5	1.0
Hillsdale	1	38.0	30.5
Osceola	1	54.0	52.0
St. Clair	1	35.0	29.0
Washtenau	1	600.0	600.0
Mississippi			
Adams	1	4.0	0.7
Clarke	2	40.0	26.0
Forrest	1	60.0	11.8
Jasper	1	10.0	--
Marion	2	29.0	10.5
Pike	1	20.0	7.2
Smith	1	15.0	8.0
Montana			
Fallon	1	5.8	5.0
Glacier	1	30.0	20.0
Musselshell	1	4.0	1.0
Powder River	1	25.0	9.5
Richland	1	6.0	4.0
Roosevelt	1	2.5	0.8
Nebraska			
Cheyenne	1	12.5	7.0
Kimball	1	12.0	6.1
New Mexico			
Eddy	5	330.0	--
Lea	23	--	--
McKinley	1	--	--
Rio Arriba	1	95.0	68.4
Roosevelt	1	56.5	36.7
San Juan	5	1368.0	1271.2
North Dakota			
Burke	2	32.0	--
Williams	1	105.0	76.2
Oklahoma			
Alfalfa	1	45.0	33.1
Beaver	7	310.0	264.7
Beckham	1	225.0	95.0
Blaine	2	70.0	47.5
Caddo	1	7.0	--
Canadian	1	125.0	105.8
Carter	2	80.0	72.4
Cimarron	1	50.0	42.0
Cleveland	2	--	--

Table B-4 (Continued). NATURAL GAS PROCESSING PLANTS IN THE UNITED STATES, JANUARY, 1972

State County	Total Number of Plants	Total Gas Capacity[1], MMSCFD	Total Gas Throughput[1], MMSCFD
Creek	2	26.0	--
Custer	2	58.0	50.0
Dewey	6	195.0	152.0
Ellis	1	50.0	10.0
Garfield	5	203.0	152.9
Garvin	4	--	--
Grady	2	--	72.0
Grant	3	50.0	39.2
Harper	1	225.0	206.5
Hughes	1	25.0	--
Kay	4	388.7	338.7
Kingfisher	4	248.0	201.4
Lincoln	3	37.0	--
Logan	1	35.0	14.4
Love	2	73.0	--
Major	3	162.0	--
Marshall	1	27.0	19.7
McLean	4	65.0	54.4
Noble	1	3.0	2.0
Okfuskee	1	1.0	0.6
Oklahoma	4	186.0	--
Pontotoc	2	6.5	5.6
Seminole	3	60.0	15.5
Stephens	5	--	--
Texas	6	369.0	315.4
Woodward	3	321.0	--
Pennsylvania			
Elk	1	4.0	2.5
Venango	1	4.0	0.8
South Dakota			
Butte	1	38.0	30.0
Texas			
Anderson	1	15.0	6.0
Andrews	8	422.0	176.2
Aransas	1	75.0	64.0
Atacosa	4	--	160.1
Bee	3	207.0	134.0
Bexar	1	150.0	105.0
Brazoria	10	2509.7	1661.9
Brooks	7	714.0	558.9
Calhoun	4	273.0	173.2
Callahan	1	5.0	3.0
Carson	1	10.0	7.0
Cass	2	85.0	55.0
Chambers	4	--	--

Table B-4 (Continued). NATURAL GAS PROCESSING PLANTS IN THE UNITED STATES, JANUARY, 1972

State County	Total Number of Plants	Total Gas Capacity[1], MMSCFD	Total Gas Throughput[1], MMSCFD
Cherokee	1	30.0	15.1
Cochran	1	25.0	20.0
Colorado	4	595.0	391.7
Comanche	1	5.0	0.7
Concho	1	14.0	10.7
Cooke	2	33.0	21.6
Crane	6	--	--
Crockett	6	183.0	155.9
Dawson	2	8.0	--
Dewitt	1	150.0	130.0
Dimmitt	1	15.0	18.0
Duval	2	105.0	62.6
Eastland	4	23.3	18.6
Ector	8	811.0	--
Erath	1	25.0	6.0
Fisher	2	30.0	29.6
Fort Bend	3	132.0	108.6
Franklin	1	50.0	41.0
Frio	1	20.0	9.0
Gaines	3	113.0	52.5
Galveston	4	93.0	53.7
Gray	6	245.0	--
Grayson	3	75.0	--
Gregg	5	--	61.1
Hale	1	16.0	16.0
Hansford	2	510.0	--
Hardeman	1	15.0	6.0
Hardin	3	139.0	81.2
Harris	5	--	--
Harrison	4	360.0	116.6
Henderson	3	235.0	170.4
Hidalgo	11	639.0	311.3
Hockley	3	122.0	99.7
Hopkins	1	--	13.0
Houston	1	40.0	30.0
Howard	1	55.0	--
Hutchinson	9	1093.0	--
Irion	2	30.6	26.5
Jack	3	19.0	14.6
Jackson	5	--	--
Jefferson	7	--	233.8
Jim Hogg	2	108.0	74.7
Jim Wells	5	826.0	--
Karnes	1	60.0	49.0
Kenedy	1	210.0	203.6

Table B-4 (Continued). NATURAL GAS PROCESSING PLANTS IN THE UNITED STATES, JANUARY, 1972

State / County	Total Number of Plants	Total Gas Capacity[1], MMSCFD	Total Gas Throughput[1], MMSCFD
Kent	1	16.0	12.0
Kleberg	2	1759.0	1760.5
Lavaca	3	275.0	132.5
Leon	1	10.0	1.7
Liberty	4	152.0	76.2
Live Oak	5	267.0	137.2
McClennan	1	60.0	46.4
McMullen	2	47.0	26.0
Madison	1	20.0	19.7
Marion	1	3.2	2.5
Martin	2	23.0	19.0
Matagorda	9	1001.0	--
Maverick	1	5.0	2.2
Midland	7	--	--
Montague	1	25.0	6.8
Montgomery	5	160.0	105.6
Moore	7	1590.0	666.0
Navarro	1	12.0	11.0
Nolan	3	36.0	24.9
Nueces	10	938.0	776.6
Ochiltree	2	250.0	--
Palo Pinto	3	120.0	85.0
Panola	6	--	--
Parker	2	135.0	106.7
Pecos	9	--	--
Potter	2	230.0	129.1
Reagan	3	198.0	106.6
Reeves	2	38.0	--
Refugio	5	386.5	179.1
Runnels	1	1.1	0.2
Rusk	4	58.5	--
San Patricio	8	--	247.7
Schleicher	1	56.0	50.4
Scurry	4	303.0	--
Shackleford	2	25.0	17.0
Smith	2	13.0	4.6
Starr	7	252.0	246.0
Stephens	6	--	--
Stonewall	1	16.0	9.8
Taylor	1	8.0	2.5
Terry	1	5.0	4.7
Tom Green	2	7.0	3.9
Upton	6	--	--
Van Zandt	3	105.0	57.1
Victoria	3	149.0	89.5

Table B-4 (Continued). NATURAL GAS PROCESSING PLANTS IN THE UNITED STATES, JANUARY, 1972

State County	Total Number of Plants	Total Gas Capacity[1], MMSCFD	Total Gas Throughput[1], MMSCFD
Waller	1	1260.0	1076.0
Ward	4	--	--
Webb	1	190.0	130.0
Wharton	2	130.0	67.5
Wheeler	2	--	21.0
Wilbarger	1	1.4	0.7
Willacy	2	119.0	49.9
Winkler	7	--	--
Wise	2	--	239.4
Wood	5	--	--
Yoakum	2	237.0	226.5
Young	3	23.0	15.6
West Panhandle Field	1	90.0	45.0
Utah			
San Juan	2	180.0	103.8
Uintah	1	38.0	17.6
West Virginia			
Kanawha	1	35.0	29.0
Wayne	1	170.0	104.0
Wetzel	1	80.0	82.5
Wyoming			
Campbell	9	151.6	129.8
Carbon	2	222.5	195.1
Converse	2	108.0	--
Crook	2	17.0	9.0
Fremont	2	94.6	77.4
Johnson	1	15.0	4.7
Lincoln	1	250.0	190.6
Natrona	1	80.0	60.0
Park	2	22.7	18.7
Sublette	1	20.0	12.4
Sweetwater	2	40.0	36.5
Uinta	1	100.0	28.5
Washakie	1	50.0	31.5

[1] Volumes in million standard cubic feet per day.
1 SCF = 0.0267 normal cubic meters.

Source: Process Research, Inc., Screening Report, Crude Oil and Natural Gas Production Processes, PB-222718, Cincinnati, Ohio, 1972.

Table B-5. WELLS DRILLED IN THE U. S.

State	Total Wells Drilled 1974	1975 Forecast
Alabama	95	124
Alaska	32	119
Arizona	11	8
Arkansas	300	306
California	1,993	2,199
Colorado	823	901
Florida	48	96
Georgia	5	0
Idaho	2	0
Illinois	740	773
Indiana	403	407
Iowa	2	0
Kansas	3,066	3,117
Kentucky	734	766
Louisiana	3,001	3,387
Maryland	2	0
Michigan	390	526
Mississippi	463	534
Missouri	55	24
Montana	648	691
Nebraska	228	262
Nevada	2	4
New Mexico	1,138	1,237
New York	311	327
North Carolina	10	0
North Dakota	134	198
Ohio	1,785	1,765
Oklahoma	3,063	3,147

Table B-5 (continued). WELLS DRILLED IN THE U. S.

State	TOTAL WELLS DRILLED 1974	1975 Forecast
Pennsylvania	1,327	1,281
South Dakota	10	17
Tennessee	110	112
Texas	10,309	10,952
Utah	187	212
Virginia	52	48
West Virginia	822	816
Wyoming	1,072	1,147
TOTAL U. S.	33,373	35,503

Source: "Drillers Sank More Wells than Considered in Early-Year Planning", Oil and Gas Journal 73(4), 110-111 (1975).

APPENDIX C

PARTIAL LISTING OF DOMESTIC PRODUCERS

Table C-1. PARTIAL LISTING OF DOMESTIC PRODUCERS

Company	Production	Office Location
Integrated Oil Companies		
Amerada Hess Corp.	229,000 bpd crude	New York, New York
American Petrofina, Inc.	19,000 bpd crude and condensate and 55 MMscfd natural gas in USA and Venezuela	Dallas, Texas
Ashland Oil, Inc.	23,000 bpd crude and 32 MMscfd natural gas - mid 1973	Ashland, Kentucky
Atlantic Richfield Co.	Worldwide figures for 1972 - 651,900 bpd crude and 2 billion scfd natural gas	Los Angeles, California
Champlin Petroleum Co.		Fort Worth, Texas
Cities Service Co.		New York, New York
Colorado Interstate Corp.		Colorado Springs, Colorado
Continental Oil Co.		Houston, Texas
Crown Central Petroleum Corp.		Baltimore, Maryland
Diamond Shamrock Oil and Gas Co.	1972 - 4,400 bpd crude and 16,600 bpd natural gas liquids	Amarillo, Texas
El Paso Natural Gas Co.	1972 - 1.85 trillion cubic feet delivered to sales	El Paso, Texas
Exxon Corp.	1972 U. S. Production - 1,073,000 bpd crude and natural gas liquids	New York, New York
Getty Oil Co.	1973 Worldwide Production - 420,000 bpd crude and natural gas liquids	Los Angeles, California
Gulf Oil Corp.	1971 Worldwide Production - 3,282,200 bpd crude and natural gas liquids	Pittsburgh, Pennsylvania
Hunt Oil Co.		Dallas, Texas
Husky Oil, LTD.	1972 - 39,272 bpd crude and natural gas liquids and 81,462 Mcfd natural gas	Calgary, Alta, Canada
Kerr-McGee Corp.	1971 Net Production - 15.2 million barrels of crude and natural gas liquids	Oklahoma City, Oklahoma
Marathon Oil Co.	1972 domestic production - 189,600 bpd crude and natural gas liquids and 442.9 million cfd natural gas	Findlay, Ohio
Mobil Oil Corp.	1972 - 2 million bpd crude and natural gas	New York, New York
Murphy Oil Corp.	1971 - 49,000 bpd crude and natural gas liquids and 66,000 Mcfd natural gas	El Dorado, Ark.
National Cooperative Refinery Association	1973 - 8,500 bpd crude	McPherson, Kansas
Pennzoil Co.		Houston, Texas
Phillips Petroleum Co.	1972 - 363,100 bpd crude and natural gas liquids	Bartlesville, Oklahoma
Quaker State Oil Refining Corp.	1971 - 2,710 bpd crude	Oil City, Pennsylvania
Shell Oil Co.	1972 - 629,000 bpd crude and natural gas liquids	Houston, Texas
The Signal Companies, Inc.		Beverly Hills, California
Skelly Oil Co.		Tulsa, Oklahoma
Standard Oil Co. of California	1972 Worldwide Production - 3,324,000 bpd crude and natural gas liquids	San Francisco, California
Standard Oil Co. (Indiana)		Chicago, Illinois
The Standard Oil Co. (Ohio)	1972 - 50,055 bpd crude and natural gas liquids	Cleveland, Ohio
Sun Oil Co.	72 - 369,007 bpd crude and 49,598 bpd tural gas liquids	St. Davids, Pennsylvania

Table C-1 (Continued). PARTIAL LISTING OF DOMESTIC PRODUCERS

Company	Production	Office Location
Integrated Oil Companies (Cont.)		
Tenneco Inc.	1972 - 81,778 bpd crude and natural gas liquids and 938 MMcfd natural gas	Houston, Texas
Texaco, Inc.	1972 - 4,021,000 bpd crude and natural gas liquids	New York, New York
Texas Eastern Transmission Corp.		Houston, Texas
Union Oil Company of California	1971 - 326,800 bpd crude and 1.6 billion scfd natural gas	Los Angeles, California
Large Independents		
A. L. Abercrombi		Wichita, Kansas
J. S. Abercrombi Mineral Co., Inc.		Houston, Texas
Ada Oil Co.		Houston, Texas
Adobe Corp.		Midland, Texas
J. W. Akin		Wichita Falls, Texas
Aladdin Petroleum Corp.		Wichita, Kansas
Alpar Resources, Inc.	Monthly Production - 37,000 bbl crude, 500 MMcf natural gas	Perryton, Texas
Allen and Shumate, Inc.		Alice, Texas
Altex Oil Corp.		Vernal, Utah
Aluminum Company of America		Pittsburgh, Pennsylvania
Amarex, Inc.		Oklahoma City, Oklahoma
Amax Petroleum Corp.		Houston, Texas
American Independent Oil Co.		New York, New York
American Natural Gas Production Co.		Detroit, Michigan
American Pacific International, Inc.		Los Angeles, California
American Trading and Production Corp.		Baltimore, Maryland
Ames Oil and Gas		Houston, Texas
Anchor Production, Co.		Tulsa, Oklahoma
Ancora-Verde Corp.		San Francisco, California
James K. Anderson		Midland, Texas
Richard S. Anderson, Inc.		Midland, Texas
A&N Producing Services, Inc.		Jackson, Mississippi
Anschutz, Corp.		Denver, Colorado
An-Son Corp.		Oklahoma City, Oklahoma
Antelope Gas Products Co.		Midland, Texas
Morris R. Antweil		Hobbs, New Mexico
Apache Corp.	Proven Reserves Dec., 1972 - 99,790,450 Mcf natural gas; 7,826,000 barrels crude	Minneapolis, Minnesota
Apco Oil Corp.		Houston, Texas
Apexco, Inc.		Minneapolis, Minnesota
Appleton Oil Co.		Oklahoma City, Oklahoma
Aquitaine Oil Corp.		Houston, Texas
Aracca Petroleum Corp.		New York, New York
Ard Drilling Co.		Midland, Texas
Argo Petroleum Corp.		Los Angeles, California
Armer Oil Co.		Fort Worth, Texas

Table C-1 (Continued). PARTIAL LISTING OF DOMESTIC PRODUCERS

Company	Production	Office Location
Large Independents (Cont.)		
Armour Properties		Wichita Falls, Texas
Atlantic International Oil Corp.		Columbus, Ohio
Atlantic Oil Co.		Los Angeles, California
Austral Oil Co., Inc.		Houston, Texas
Aztec Oil and Gas Co.	Daily Production - 3,000 bbl crude; 103 MMcf natural gas	Dallas, Texas
Bailey Gas Systems, Inc.		Tulsa, Oklahoma
Barber Oil Exploration, Inc.		Houston, Texas
Barber Oil Inc.		Carlesbad, New Mexico
J. C. Barnes Oil Co.		Midland, Texas
Barnwell Drilling Co., Inc.		Shreveport, Louisiana
Basin Oil Co.		Big Springs, Texas
Basin Petroleum Corp.		Oklahoma City, Oklahoma
H. W. Bass and Sons, Inc.		Dallas, Texas
Perry R. Bass		Fort Worth, Texas
Murphy H. Baxter		Houston, Texas
Bay Rock, Corp.		San Antonio, Texas
Beard Oil Co.		Oklahoma City, Oklahoma
Beaver Mesa Exploration Co.		Denver, Colorado
Belco Petroleum Corp.	1970 - 90.1 MMcfd natural gas; 33,762 bpd crude and condensate	New York, New York
Belden and Blake Oil Production		Canton, Ohio
Bell Brothers		Robinson, Illinois
J. Ainslic Bell		Los Angeles, California
Kelly Bell		Midland, Texas
Bell Petroleum Co.		Encino, California
Belridge Oil Co.		Los Angeles, California
Benedum-Trees Oil Co.		Pittsburgh, Pennsylvania
Bengal Producing Co.		Dallas, Texas
Bennett, Mills, Estate		Houston, Texas
Bennett Production Corp.		Bowie, Texas
Beren Corp.		Denver, Colorado
Berry and Ewing		Taft, California
Thomas N. Berry and Co.		Stillwater, Oklahoma
Bertman Gas and Oil Corp.		Houston, Texas
Big 6 Drilling Co.		Houston, Texas
Big Four Petroleum Co.		Cushing, Oklahoma
Blackrock Oil Co.		Midland, Texas
Blackwood and Nichols Co.		Oklahoma City, Oklahoma
Blaik Oil Co.		Oklahoma City, Okla.
B. B. Blair		Tulsa, Oklahoma
BMG, Inc.		Independence, Kansas
Bock and Bacon		Houston, Texas
Bolin Oil Co., A Partnership		Wichita Falls, Texas
Bond Operating Co.		Dallas, Texas
Bonray Oil Co.		Oklahoma City, Oklahoma

Table C-1 (Continued). PARTIAL LISTING OF DOMESTIC PRODUCERS

Company	Production	Office Location
Bounty Production Co.		San Antonio, Texas
BP Alaska Inc.		New York, New York
BP North America, Inc.		New York, New York
Bracken Oil Co.		Tyler, Texas
Bradco Oil and Gas Co.		Houston, Texas
The Bradley Producing Corp.		Wellsville, New York
Brea Canon Oil Co.		Brea, California
T. S. Bridges Oil Operating Co.		Fort Worth, Texas
Bridwell Oil Co.		Wichita Falls, Texas
Bright and Schiff Oil and Gas Producers		Dallas, Texas
Brooks Hall Oil Corp.		Oklahoma City, Oklahoma
H. L. Brown, Jr.		Midland, Texas
Maurice L. Brown Trust		Kansas City, Missouri
BTA Oil Producers		Midland, Texas
George L. Buckles Company		Monahans, Texas
Burk Royalty Company		Wichita Falls, Texas
Burlington Northern Inc.		Billings, Montana
Burmah Oil Development, Inc.	4,000 bpd crude; 24 MMscfd natural gas	New Orleans, Louisiana
R. L. Burns Corp.		San Bernardino, California
Buttes Gas and Oil Co.		Oakland, California
W. K. Byrom		Hobbs, New Mexico
Cabeen Exploration Corp.		North Hollywood, California
Cabot Corp.		Boston, Massachusetts
Cactus Operating Co.		Wichita Falls, Texas
Caddo Oil Co., Inc.		Shreveport, Louisiana
Callery Properties, Inc.		Houston, Texas
Cal-Mon Oil Co.		
Calvert Funds, Inc.		Tulsa, Oklahoma
Capataz Corp.		Midland, Texas
Cardinal Petroleum Co.		Billings, Montana
Carlsberg Petroleum Corp.		Los Angeles, California
F. William Carr		Corpus Christi, Texas
Carter and Mandel Co.		Lubbock, Texas
Caulkins Oil Co.		Denver, Colorado
Cayman Corp.		Palos Verdes Peninsula, California
Cenard Oil and Gas Co.		Dallas, Texas
Cenex (Farmers Union Central Exchange, Inc.)		St. Paul, Minnesota
Century Petroleum, LTD.		Fort Worth, Texas
Chambers Mauren		Coalinga, California
Champlin Exploration, Inc.		Enid, Oklahoma
Chandler and Associates, Inc.		Denver, Colorado
Chanslor-Western Oil and Development Co.		Chicago, Illinois
Charter Oil Co.		Jacksonville, Florida

Table C-1 (Continued). PARTIAL LISTING OF DOMESTIC PRODUCERS

Company	Production	Office Location
Chartiers LTD.		Midland, Texas
Chase Production Co.		Oxnard, California
D. C. Cheesman and Son		Houston, Texas
Cheyenne Petroleum Co.		Oklahoma City, Oklahoma
Chorney Oil Co.		Denver, Colorado
Citronelle Unite		Citronelle, Alabama
City of Long Beach		Long Beach, California
C&K Petroleum, Inc.		Houston, Texas
Clarcan Petroleum Corp.		Denver, Colorado
Cleverock Energy Corp.		Denver, Colorado
Clinton Oil Co.		Wichita, Kansas
Coal Oil and Gas Co.		Ardmore, Oklahoma
Estate of George H. Coates		San Antonio, Texas
Collier Diamond C Oils, Inc.		Fort Worth, Texas
C. G. Collins Petroleum Corp.		Campbellsville, Kentucky
Columbia Drilling Co.		Houston, Texas
Columbia Oil Corp.		San Angelo, Texas
Condor Operating Co.		Odessa, Texas
Connally Oil Co., Inc.		Abilene, Texas
Consolidated Oil and Gas, Inc.		Denver, Colorado
Cooper and Brain, Inc.		Wilmington, California
Cordele Operating Co.		Corsicana, Texas
Cornell, Drew, Inc.		Lafayette, Louisiana
Cornell Oil Co.		Dallas, Texas
Coronado Oil Co.		Denver, Colorado
Edwin L. Cox		Dallas, Texas
Creslenn Oil Co.		Dallas, Texas
Crestmont Oil Co.		San Marino, California
Houston Petroleum Co.		Houston, Texas
Crystal Oil Co.		Shreveport, Louisiana
Cummins and Walker Oil Co., Inc.		Corpus Christi, Texas
Da Mac Drilling Co., Inc.		Great Bend, Kansas
Damson Oil Corp.		New York, New York
Danoil, Inc.		Fort Worth, Texas
The Daube Co.		Ardmore, Oklahoma
Davis Investment Co.		Long Beach, California
Davis Oil Co.		Denver, Colorado
Dearing Inc.		Dallas, Texas
Deck Oil Co.		Tulsa, Oklahoma
Depco Inc.		Denver, Colorado
Delhi International Oil Corp.		Dallas, Texas
Delta Drilling Co.		Tyler, Texas
Diamond M. Drilling Co.		Houston, Texas
Ray J. Diekemper, Jr.		Lubbock, Texas
Dorchester Exploration, Inc.		Midland, Texas
D. L. Dorland		Midland, Texas

Table C-1 (Continued). PARTIAL LISTING OF DOMESTIC PRODUCERS

Company	Production	Office Location
The Dow Chemical Co.		Houston, Texas
Drilling and Production Co.		Torrance, California
Dugan Production Corp.		Farmington, New Mexico
Walter Duncan Oil Properties		La Salle, Illinois
Eason Oil. Co.		Oklahoma City, Oklahoma
Edinger Inc.		Oklahoma City, Oklahoma
Eldorado Oil and Gas, Inc.		Dallas, Texas
Elf Petroleum Corp. - U.S.A.		New York, New York
Elk Oil Co.		Roswell, New Mexico
Engineered Operating Company		Wichita Falls, Texas
Equity Oil Co.		Salt Lake City, Utah
Exchange Oil and Gas Corp.		New Orleans, Louisiana
Expando Production Co.		Wichita Falls, Texas
Fair Oil Co.		Tyler, Texas
Falcon Petroleum Co.		Coalinga, California
Falcon Seaboard, Inc.		Houston, Texas
Olen F. Featherstone		Roswell, New Mexico
Felmont Oil Corp.		New York, New York
Bob Ferguson		Los Angeles, California
Ferguson and Bosworth		Bakersfield, California
Bert G. Fields		Dallas, Texas
Fikes, Leland, Estate		Dallas, Texas
Five Resources, Inc.		Houston, Texas
Flag-Redfern		Midland, Texas
Florida Gas Exploration Co.		Jackson, Mississippi
Fora Co.		Borger, Texas
Forest Oil Corp.		Bradford, Pennsylvania
Formax Oil Co.		Irvine, California
Fortune Drilling Corp.		San Angelo, Texas
Fortune Production Co.		Fort Worth, Texas
Francis Oil and Gas, Inc.		Tulsa, Oklahoma
Freeport Oil Co.		New Orleans, Louisiana
Frost Oil Co.		San Antonio, Texas
Galaxy Oil Co.		Wichita Falls, Texas
Samuel Gary, Oil Producer		Denver, Colorado
General American Oil Co. of Texas	1971 - 30,000 bpd crude and condensate; 183,000 Mcfpd natural gas	Dallas, Texas
General Crude Oil Co.		Houston, Texas
General Exploration Co.		Los Angeles, California
The GHK Co.		Oklahoma City, Oklahoma
Gilliland Oil and Land Co.		Santa Maria, California
Warren Ginther and Co.		Houston, Texas
Goldking Production Co.		Houston, Texas
Goldston Oil Corp.		Houston, Texas
Grace Petroleum Corp.		New York, New York
Graham - Michaelis Corp.		Wichita, Kansas

Table C-1 (Continued). PARTIAL LISTING OF DOMESTIC PRODUCERS

Company	Production	Office Location
Graner Oil Co.		Long Beach, California
Gray Operating Co., Inc.		Ardmore, Oklahoma
Great Basins Petroleum Co.		Los Angeles, California
Great Expectations Oil Corp.		Fort Worth, Texas
Great Plains Land Co.		Dallas, Texas
Great Western Drilling Co.		Midland, Texas
Great Yellowstone Corp.		Tulsa, Oklahoma
Green & Michaelson Producing Co.		Midland, Texas
H. J. Gruy and Associates, Inc.		Dallas, Texas
Gulf Interstate Overseas Ltd.		Houston, Texas
Henry H. Gungoll & Associates		Enid, Oklahoma
Hadson Ohio Oil Co.		Oklahoma City, Oklahoma
Michel T. Halbouty		Houston, Texas
Halliburton Oil Producing Co.		Oklahoma City, Oklahoma
Claude B. Hanill, Independent Producer		Houston, Texas
Hamilton Bros. Oil Co.		Denver, Colorado
Jake L. Hamon		Dallas, Texas
Hanagan Petroleum Corp.		Roswell, New Mexico
Roger C. Hanks		Midland, Texas
Hanover Planning Co. Inc.		New York, New York
Hanson Oil Corp.		Roswell, New Mexico
Harding Oil Co.		Dallas, Texas
Har-Ken Oil Co.		Owensboro, Kentucky
Harkins & Co.		Alice, Texas
Wayne Harper		Dallas, Texas
Dan J. Harrison, Jr.		Houston, Texas
Sam G. Harrison		Houston, Texas
Hathaway Co.		Santa Fe Springs, California
Estate of William G. Helis		New Orleans, Louisiana
Helmerich & Payne, Inc.		Tulsa, Oklahoma
Herley Kelly Co.		Long Beach, California
Herman Geo. Kaiser, Oil Producer		Tulsa, Oklahoma
Herndon Drilling Co.		Tulsa, Oklahoma
A. E. Hermann Corp.		Amarillo, Texas
Hewit & Dougherty		Beeville, Texas
Estill S. Heyser, Jr.		Dallas, Texas
Highland Resources, Inc.		Houston, Texas
A. G. Hill		Dallas, Texas
Hilliard Oil & Gas, Inc.		Menlo Park, California
W. B. Hinton Drilling Co., Inc.		Mt. Pleasant, Texas
Hissom Drilling Co.		Midland, Texas
HNG Oil Co.		Midland, Texas
Holder Petroleum Corp.		Lovington, New Mexico
Holloway Dynamics, Inc.		Austin, Texas
W. W. Holmes, Operator		Merced, California

Table C-1 (Continued). PARTIAL LISTING OF DOMESTIC PRODUCERS

Company	Production	Office Location
Home Stake Production Co.		Tulsa, Oklahoma
Houston Oil and Minerals Corp.		Houston, Texas
Houston Production Co.		Houston, Texas
Howell Drilling, Inc.		San Antonio, Texas
H & S Oil Co.		Artesia, New Mexico
J. M. Huber Corp.		Houston, Texas
William A. & Edward R. Hudson		Fort Worth, Texas
Roy M. Huffington, Inc.		Houston, Texas
Hughes & Hughes Oil & Gas		Beeville, Texas
Hughes & New Oil Co., Inc.		Natchez, Mississippi
Thomas D. Humphrey, Oil Properties Ltd.		Dallas, Texas
Indiana Farm Bureau Cooperative Associates Inc.		Indianapolis, Indiana
Industrial Development Associates		Sante Fe Springs, California
Inexco Oil Co.		New York, New York
Tom L. Ingram		Roswell, New Mexico
Inlet Oil Corp.		Dallas, Texas
Intercontinental Energy Corporation		New York, New York
International Energy Co.		Dallas, Texas
Invent, Inc.		Houston, Texas
The Iron Mountain Oil Co.		Forth Worth, Texas
L. B. Jackson Co.		Tulsa, Oklahoma
T. L. James & Co., Inc.		Ruston, Louisiana
Jefferson Lake Sulphur Co.		Houston, Texas
Jenkins Drilling & Supply Co.		Oklahoma City, Oklahoma
Jenney Oil Co., Inc.		Chestnut Hill, Massachusetts
Jernigan Oil Company		Oklahoma City, Oklahoma
F. T. Johnson, Jr.		Wichita Falls, Texas
A. V. Jones & Sons		Albany, Texas
Jones - B'Brien, Inc.		Shreveport, Louisiana
Josey Oil Co.		Houston, Texas
J - W Operating Co.		Dallas, Texas
G. E. Kodane & Sons		Wichita Falls, Texas
Kaiser - Francis Oil Company		Tulsa, Oklahoma
Kathol Petroleum, Inc.		Wichita, Kansas
Katz Oil Co.		San Antonio, Texas
Kentucky Drilling and Operating Corp.		Lexington, Kentucky
Kewanee Oil Co.		Bryn Mawr, Pennsylvania
S. H. Killingsworth		Longview, Texas
Kilmarnock Oil Co.		New Orleans, Louisiana
Kilroy Co. of Texas, Inc.		Houston, Texas
Kimball Production Co.		Houston, Texas
Kimbell Oil Company		Fort Worth, Texas
Kingery Drilling Co., Inc.		Ardmore, Oklahoma
King Oil Co.	500 bpd oil & gas production	Tulsa, Oklahoma

Table C-1 (Continued). PARTIAL LISTING OF DOMESTIC PRODUCERS

Company	Production	Office Location
King Resources Co.		Denver, Colorado
Kirby Petroleum Co.		Houston, Texas
Kissinger Petroleum Corp.		Denver, Colorado
KKA Corp.		Houston, Texas
K & K Oil Co.		Los Angeles, California
Knight & Miller Oil Corp.		Denver, Colorado
Knox Industries, Inc.		Midland, Texas
Koch Industries, Inc.		Wichita, Kansas
KRM Petroleum Corp.		Denver, Colorado
Krumme Oil Co.		Bristow, Oklahoma
Laco Oil Co.		Abilene, Texas
Ladd Petroleum Corp.		Denver, Colorado
Lake Ronel Oil Co.		Tyler, Texas
Lamb Oil & Gas		Portland, Texas
Lano Oil & Gas Co.		Wichita, Kansas
Forrest C. Lattner		San Antonio, Texas
Laymac Corp.		Bakersfield, California
Lear Petroleum Corp.		Dallas, Texas
Lloyd Corp. LTD.		Beverly Hills, California
Lofton Oil Co.		Wichita Falls, Texas
Logue & Patterson, Inc.		Dallas, Texas
Lohman - Johnson Drilling Co. Inc.		Evansville, Indiana
Lone Star Gas Co.	1971 total production - 119 MMcf natural gas; 3,882,589 bbl crude; 205.4 million gallons natural gas liquids	Dallas, Texas
Nipak, Inc.		Dallas, Texas
Long Beach Oil Development Co.		Long Beach, California
Longhorn Production Co.		Dallas, Texas
Longstreet Oil Corp.		McAllen, Texas
Louisiana Land & Exploration Co.		New Orleans, Louisiana
Louisiana - Pacific Resources, Inc.		Palo Alto, California
Ralph Lowe Estate		Midland, Texas
Lubell Oil Co.		Tulsa, Oklahoma
Luling Oil & Gas Co., Inc.		San Antonio, Texas
LVO Corp.		Tulsa, Oklahoma
Lyons Petroleum Corp.		Shreveport, Louisiana
Mabee Petroleum Corp.		Tulsa, Oklahoma
MacDonald Oil Corp.		Dallas, Texas
MacKellar, Inc.		Oklahoma City, Oklahoma
Mack Oil Co.		Duncan, Oklahoma
MACPET		St. Paul, Minnesota
Madison Oil Co.		Wichita Falls, Texas
Magellan Petroleum Corp.		Hartford, Connecticut
Magness Petroleum Co.		Oklahoma City, Oklahoma
Maguire Oil Co.		Dallas, Texas
Mallard Exploration, Inc.		Midland, Texas

Table C-1 (Continued). PARTIAL LISTING OF DOMESTIC PRODUCERS

Company	Production	Office Location
Manziel Interests		Tyler, Texas
Marrion Corp.		Mobile, Alabama
Mark Production Co.		Tyler, Texas
The Mayflower Co.		Oklahoma City, Oklahoma
Maynard Oil Co.		Dallas, Texas
The Mayronne Co.		Harvey, Louisiana
McAlester Fuel Co.		McAlester, Oklahoma
W. C. McBride, Inc.		St Louis, Missouri
McClellan Oil Corp.		Roswell, New Mexico
McCormick Oil & Gas Corp.		Houston, Texas
McCulloch Oil Corp.	1968 total production - 1,412,028 bbl crude; 1,371,117 Mcf natural gas	Los Angeles, California
McMahon - Bullington Drilling Co.		Wichita Falls, Texas
McMoran Exploration Co.		Dallas, Texas
McRae Oil Corp.		Houston, Texas
Meadco Properties		Midland, Texas
John W. Mecom		Houston, Texas
Medders Petroleum Corp.		Wichita Falls, Texas
Mesa Petroleum Corp.		Amarillo, Texas
Miami Oil Producers, Inc.		Abilene, Texas
Michigan Oil Co.		Alma, Michigan
Midwest Oil Corp.		Denver, Colorado
Minerals Management, Inc.		Casper, Wyoming
George Mitchell & Associates, Inc.	200 Mcfd gas; 15,000 bpd oil, distillates, plant products	Houston, Texas
M. J. Mitchell		Dallas, Texas
Mohoma Petroleum Corp.		Fort Lauderdale, Florida
Moncrief Oil Interests		Fort Worth, Texas
Monsanto Co.		St Louis, Missouri
Moranco		Hobbs, New Mexico
E. F. Moran, Inc.		Evansville, Indiana
Morgan Brothers		Wichita Falls, Texas
Mormac Oil & Gas Co.		Corpus Christi, Texas
Robert Mossbacher		Houston, Texas
Moss Petroleum Co.		Dallas, Texas
MWJ Producing Co.		Midland, Texas
National Oil Co.		Los Angeles, California
Natol Petroleum Corp.		Oklahoma City, Oklahoma
Natomas Co.		San Francisco, California
Natural Resources Corp.		Denver, Colorado
Newmont Oil Co.		Houston, Texas
North American Resources Corp.		Houston, Texas
North American Royalties, Inc.		Chattanooga, Tennessee
Northern Pump Co.		Minneapolis, Minnesota
Northwest Oil Co.		Dallas, Texas
Northwest Production Corp.		El Paso, Texas
Nueve Operating Co. of Texas		Abilene, Texas

Table C-1 (Continued). PARTIAL LISTING OF DOMESTIC PRODUCERS

Company	Production	Office Location
Oakland Corp.		Shreveport, Louisiana
Occidental Petroleum Corp.		Los Angeles, California
Ocean Drilling & Exploration Co.		New Orleans, Louisiana
Oceanic Exploration Co.		Denver, Colorado
Estate of Gladys O'Donnell		Wilmington, California
Offshore Exploration Oil Co.		Newport Beach, California
Oilfield Consultants, Inc.		Houma, Louisiana
Oil, Gas and Minerals Corp.		Woodland Hills, California
Oil & Gas Futures, Inc.		New Orleans, Louisiana
Oil Management Corp.		Dallas, Texas
Oil Ventures International Inc.		New York, New York
Oleum, Inc.		Longview, Texas
Charles W. Oliphant		Tulsa, Oklahoma
Joseph I O'Neill Properties		Midland, Texas
Onyx Oil Co.		Abilene, Texas
W. B. Osborn, Operator		San Antonio, Texas
Pacific Lighting Exploration Co.		Los Angeles, California
Pacific Oil & Gas Co.		Oklahoma City, Oklahoma
Pan Ocean Oil Corp.		New York, New York
Pantepec International, Inc.		Hartford, Connecticut
Pardue Oil		Breckenridge, Texas
Patoil Corp.		San Antonio, Texas
Pauley Petroleum Inc.		Los Angeles, California
Payne - Johnston		Tyler, Texas
Pearson - Sibert Oil Co. of Texas		Beverly Hills, California
Peet Oil Co.		San Antonio, Texas
Pel-Tex. Inc.		Houston, Texas
Perkins & Cullum		Wichita Falls, Texas
Perkins Production Co.		Wichita Falls, Texas
Perkins Production Co.		Duncan, Oklahoma
Perkins - Prothro Co.		Wichita Falls, Texas
Perryman Operating Co., Inc.		Athens, Texas
Petro Grande, Inc.		Dallas, Texas
Petroleum Corporation of Texas		Breckenridge, Texas
Petroleum, Inc.		Wichita, Kansas
Petroleum International, Inc.		Tulsa, Oklahoma
Petroleum Management, Inc.		Laurel, Mississippi
Petroleum Research Corp.		Littleton, Colorado
Petroleum Resources Co.		Cushing, Oklahoma
Petrox Development Corp.		Great Nick, New York
Pexamin, Inc.		Houston, Texas
B. R. Phillips, Jr.		Dallas, Texas
The Pickens Co., Inc.		Dallas, Texas
D. W. Pickett		Corpus Christi, Texas
Daniel J. Pickrell		Burlingame, California
Pip Petroleum Corp.		Bloomfield Hills, Michigan

Table C-1 (Continued). PARTIAL LISTING OF DOMESTIC PRODUCERS

Company	Production	Office Location
Pitcock, Inc.		Graham, Texas
Polaris Production Corp.		Midland, Texas
Prewitt Oil Corp.		Abilene, Texas
Prochemcho Exploration Co.		Houston, Texas
Prudhoe Production, Inc.		McAllen, Texas
Publishers Petroleum		Oklahoma City, Oklahoma
Pyramid Oil Co.		Santa Fe, California
Quintana Petroleum Corp.		Houston, Texas
Rancho Oil Co.		Dallas, Texas
Ray Resources Corp.		Charleston, West Virginia
Reading & Bates Oil & Gas Co.		Tulsa, Oklahoma
Relco Exploration Co., Inc.		Monroe, Louisiana
Reserve Oil and Gas Co.	1973 - 10,306 bpd crude & condensate; 35,302 Mcfd natural gas	Los Angeles, California
Riddle & Gotlieb		San Antonio, Texas
Roark & Hooker		Abilene, Texas
Robbins Petroleum Corp.		Longview, Texas
Rocket Oil Co.		Duncan, Oklahoma
Royal International Petroleum Corp.		New Orleans, Louisiana
Royal Oil & Gas Corp.		Indiana, Pennsylvania
James E. Russell Petroleum, Inc.		Abilene, Texas
Rutherford Oil Corp.		Houston, Texas
Ryder Scott Management Co.		Wichita Falls, Texas
Sabine Royalty Corp.		Dallas, Texas
Sage Oil Co. Inc.		Los Angeles, California
Samedan Oil Corp.		Ardmore, Oklahoma
Samson Resources Co.		Tulsa, Oklahoma
Corey and Josey Schneider, Inc.		Dallas, Texas
Scoggins Petroleum Corp.		Dallas, Texas
Scope Industries		Los Angeles, California
Seitz & Comegys Oil Co.		Wichita Falls, Texas
Serio Exploration Co.		Natchez, Mississippi
Shaheen Natural Resources Co., Inc.		New York, New York
Sheldon Petroleum Co.		Lubbock, Texas
Shenandoah Oil Corp.		Fort Worth, Texas
Fred W. Shield		San Antonio, Texas
S. & J. Operating Co.		Wichita Falls, Texas
Sklar & Phillips & Associated Co.		Shreveport, Louisiana
R. E. Smith		Houston, Texas
Southern Hydrocarbons Production Co., Inc.		New Orleans, Louisiana
Southern States Oil Company		Jackson, Mississippi
Southland Royalty Co.		Fort Worth, Texas
South Louisiana Production Co., Inc.		Alexandria, Louisiana
Ralph Spence		Tyler, Texas
SRG Oil Corp.		Abilene, Texas
Staley Oil Co.		Wichita Falls, Texas

Table C-1 (Continued). PARTIAL LISTING OF DOMESTIC PRODUCERS

Company	Production	Office Location
C. R. Starnes, Et Al		Gladewater, Texas
Albert Stevenson, Estate		Los Angeles, California
J. B. Stoddard, Estate		Dallas, Texas
Stroube Development Co.		Corsicana, Texas
Suburban Propane Gas Corp.		San Antonio, Texas
Sullivan and Co.		Tulsa, Oklahoma
Summitt Energy, Inc.		Dallas, Texas
Sundance Oil Co.		Denver, Colorado
Sunrise Oil, Inc.		Fort Lauderdale, Florida
The Superior Oil Co.		Los Angeles, California
Sylvan Oil Operating Co.		Tulsa, Oklahoma
Tamarack Petroleum Co., Inc.		Milwaukee, Wisconsin
Tonnehill Oil Co.		Monterey, California
Teal Petroleum Co.		Houston, Texas
Paul C. Teas		Dallas, Texas
The Termo Co.		Long Beach, California
Tesoro Petroleum Corp.		San Antonio, Texas
Texas American Oil Corp.		Midland, Texas
Texas Crude Oil Inc.		Fort Worth, Texas
Texas International Co.		Oklahoma City, Oklahoma
Texas Oil & Gas Corp.		Dallas, Texas
Texas Pacific Oil Co., Inc.		Dallas, Texas
Texfel Petroleum Corp.		Los Angeles, California
J. Cleo Thompson		Dallas, Texas
Thums Long Beach Co.		Long Beach, California
Tipperary Corp.		Midland, Texas
J. D. Tompkins		Abilene, Texas
Traders Oil Company of Houston		Houston, Texas
Transocean Oil, Inc.		Houston, Texas
Trend Exploration Ltd.		Denver, Colorado
Triad Oil and Gas Co., Inc.		Jackson, Mississippi
Trico Industries, Inc.		Gardena, California
Trinidad Petroleum Corp.		Birmingham, Alabama
Triton Oil & Gas Corp.		Dallas, Texas
Allen K. Trobaugh		Midland, Texas
True Oil Co.		Casper, Wyoming
Trumpter Petroleum Corp.		Fort Worth, Texas
Tucker Drilling Co., Inc.		San Angelo, Texas
Twin Montana, Inc.		Graham, Texas
Union Texas Petroleum Division		Houston, Texas
United Oil Corp.		Oklahoma City, Oklahoma
Universal Resources Corp.		Dallas, Texas
Upham Oil & Gas Co.		Mineral Wells, Texas
U. S. Natural Resources, Inc.		Menlo Park, California
U - Tex Oil Co.		Salt Lake City, Utah
UV Industries Inc.		Salt Lake City, Utah

Table C-1 (Continued). PARTIAL LISTING OF DOMESTIC PRODUCERS

Company	Production	Office Location
Vanderbilt Resources Corp.		Dallas, Texas
Van Dyke Oil Co.		Houston, Texas
Varn Petroleum Co.		Wichita, Kansas
Vaughey & Vaughey		Jackson, Mississippi
Vaughn Petroleum, Inc.		Dallas, Texas
Venus Oil Co.		San Antonio, Texas
W. D. Vestal Oil Co.		Iowa Park, Texas
Victory Oil Co.		Long Beach, California
Viersen & Cochran		Okmulgee, Oklahoma
Vincent & Welch, Inc.		Lake Charles, Louisiana
Ralph H. Viney & Associates		Midland, Texas
A. J. Vogel, Inc.		Midland, Texas
Wadsworth Oil Co.		Houston, Texas
W. T. Waggoner Estate		Vernon, Texas
Keith F. Walker		Ardmore, Oklahoma
Walsh & Watts, Inc.		Fort Worth, Texas
O. F. Warren & Co., Inc.		Tulsa, Oklahoma
Warrior Oil Co.		Denver, Colorado
Watson Oil Co.		Shreveport, Louisiana
Webb Resources		Denver, Colorado
R. P. Webb		Vernon, Texas
Weco Development Corp.		Denver, Colorado
Weeks Natural Resources, Inc.		Westport, Connecticut
Wellaw Corp.	250 MMscf per month gas	Midland, Texas
Westates Petroleum Co.		Los Angeles, California
West Coast Oil Co.		Oildale, California
Western Oil Shale Corp.		Midland, Texas
Western States Producing Co.		San Antonio, Texas
Westheimer - Neustadt Corp.		Ardmore, Oklahoma
Westland Oil Development Corp.		Houston, Texas
W. Ridley Wheel Estate		Fort Worth, Texas
White Shield Oil & Gas Corp.		Tulsa, Oklahoma
Whitestone Corp.		Greenwich, Connecticut
M. H. Whittier Corp.		Los Angeles, California
Whittington Operating Co.		Houston, Texas
Wise Operating, Inc.		Tyler, Texas
The Wiser Oil Co.		Sisterville, West Virginia
Witco Chemical Corp.		New York, New York
Wollfson Oil Co.		Dallas, Texas
Woodbine Production Corp.		Kilgore, Texas
Woods Petroleum Corp.		Oklahoma City, Oklahoma
Yates Petroleum Corp.		Artesia, New Mexico
J. Lee Youngblood		Dallas, Texas

Table C-1 (Continued). PARTIAL LISTING OF DOMESTIC PRODUCERS

Company	Production	Office Location
Marshall R. Young Oil Co.		Fort Worth, Texas
Yucca Petroleum Co.		Amarillo, Texas
Zephyr Oil Co.		Tyler, Texas

Source: U.S.A. Oil Industry Directory. 13th Ed. Tulsa, Oklahoma, The Petroleum Publishing Company, 1974.

APPENDIX D

MATERIALS FOR DRILLING FLUID SYSTEMS

Table D-1. MATERIALS FOR DRILLING FLUID SYSTEMS

Fresh Water Muds

Product Trade Name	Description	Maker or Distributor
Ala-Clay	Blended sodium montmorillinite and calcium mont.	Alamo Lumber Co.
Al-Gel	Sodium montmorillinite	Alamo Lumber Co.
Ala-Lig	Caustic lignin	Alamo Lumber Co.
Ala-Phos	Sodium tetraphosphate	Alamo Lumber Co.
Ala-Tan	Caustic tannin	Alamo Lumber Co.
Ala-Thin	Mined lignite	Alamo Lumber Co.
Alamo CMC	Sodium carboxymethyl-cellulose	Alamo Lumber Co.
Alamo Quebracho	Quebracho extract	Alamo Lumber Co.
A. C. Quebracho	Quebracho-lignite compound	Alamo Lumber Co.
Anhydrox	Barium carbonate	Alamo Lumber Co.
Alclay	Sub-bentonite	Baroid Div. National Lead Co.
Altan	Quebracho mixture	Alpine Mud Service
Altan Pure	Pure quebracho	Alpine Mud Service
Alpine Lignite	Mined lignite	Alpine Mud Service
Alpine Graphite	Graphite	Alpine Mud Service
AP-25, AP-44	Caustic tannin	Alpine Mud Service
Alkatan	Caustic quebracho	Alpine Mud Service
Aquagel	Wyoming bentonite	Magcobar
Atlas Gel	Wyoming bentonite	Baroid Div. National Lead Co.
Atlas Lig	Lignitic compound	Atlas Mud Company
Barafos	Sodium tetraphosphate	Atlas Mud Company
Barium Carbonate	Barium carbonate	Baroid Div. National Lead Co.
Barium Carbonate	Barium carbonate	Magcobar
Barium Carbonate	Barium carbonate	Milwhite Mud Sales Company
Baroco	Sub-bentonite	Mud Control Laboratories
Benex	Sodium polyacrylate	Baroid Div. National Lead Co.
Bicarb. of Soda	Bicarbonate of soda	]
Caustic Soda	Sodium hydroxide	]
Carbonox	Organic thinner	]
Controlgel	Bentonite	Baroid Div. National Lead Co.
Caso	Potassium stearate	Mud Control Laboratories
Control M-D	Drilling detergent	Mud Control Laboratories
Controltan	Lignite	Mud Control Laboratories
Controlcal	Calcium lignosulfonate	Mud Control Laboratories
Cellex	Sodium carboxymethyl-cellulose	Mud Control Laboratories
Controloid	Pregelatinized starch	Baroid Div. National Lead Co.
Controlsol	Nonionic surfactant	Mud Control Laboratories
C-M-C	Sodium carboxymethyl-cellulose	Mud Control Laboratories
Cronox 211	Fresh water corrosion inhibitor	]
Cypan	Sodium polyacrylate	United Engineering Corp.
Caltrol	Calcium chloride	]
Calcium Chloride	Calcium chloride	Milwhite Mud Sales Co.
Dowcide G	Bactericide	]
Driscose (Sev. Grades)	Sodium carboxymethyl-cellulose	]
Dakolite	Processed lignite	]
Emulsifier SMB	Inorganic emulsifier	]
Emulsite	Caustic lignite	Baroid Div. National Lead Co.
E P Mudlube	Extreme pressure lubricant	Magcobar
Floxit	Polyelectrolyte	Baroid Div. National Lead Co.
Graphite	Graphite lubricant	Magcobar
Green Band	Sub-bentonite	]
Gypsum	Gypsum	Milwhite Mud Sales Corp.
High Yield	Sub-bentonite	]
Hydrogel	Bentonite	Magcobar
Hexaphos	Phosphate	Brown Mud Co.
Hydropel	Emulsified asphalt	]
Hydrocarb	Caustic carbonox	]
Hydrotan	Caustic tannin	Baroid Div. National Lead Co.
H.Q.M. Starch	Grain-based starch	Baroid Div. National Lead Co.
Impermex	Pregelatinized starch	]
Impermex Preservative	Formaldehyde compound	Baroid Div. National Lead Co.
Kero-X	Defoaming agent	Baroid Div. National Lead Co.
Kwik-Thik	Extra high-yield bentonite	Baroid Div. National Lead Co.
Kemical	Quick lime	Magcobar
Kembreak	Calcium lignosulfonate	]
Kylo	Sodium polyacrylate	Marathon Chemical Corp.
		]

Table D-1 (Continued). MATERIALS FOR DRILLING FLUID SYSTEMS

Fresh Water Muds (Cont.)

Product Trade Name	Description	Maker or Distributor
Ligco	Mineral lignite	Milwhite Mud Sales Co.
Lime	Calcium hydroxide	1
Lube-Flo	Ground gilsonite	1
Lubri-Film	Extreme pressure lubricant	Milwhite Mud Sales Co.
Lignox	Calcium lignosulfonate	Baroid Div. National Lead Co.
Lig-No-Sol	Modified lignosulfates	Alpine Mud Service
Maccogel	Wyoming bentonite	Macco Corp.
Magcogel	Wyoming bentonite	Magcobar
Magcophos	Sodium tetraphosphate	Magcobar
Mc Quebracho	Quebracho	Magcobar
May Gel	Wyoming bentonite	May Brothers, Inc.
May Clay	Sub-bentonite	May Brothers, Inc.
Maylig	Mineral lignite	May Brothers, Inc.
Maystarch	Pregelatinized starch	May Brothers, Inc.
Maycol	Calcium chloride	May Brothers, Inc.
Maco-Hex, Maccoflos	Complex phosphates	Macco Corp.
Macco-Lig	Mineral lignite	Macco Corp.
Mikol Starch	Pregelatinized starch	1
Milgel	Wyoming bentonite	Milwhite Mud Sales Co.
Mil Graphite	Graphite	Milwhite Mud Sales Co.
Milstarch	Pregelatinized starch	Milwhite Mud Sales Co.
Mil Flo	Modified polyflavinoid Comp.	Milwhite Mud Sales Co.
Mud-Bac	TrisNitro (bactericide)	1
Mud Floc	Flocculant	Mud Control Laboratories
Mil-Natan 1-2	Caustic quebracho	Milwhite Mud Sales Co.
Mil Quebracho	Quebracho (pure)	Milwhite Mud Sales Co.
My-Lo-Jel	Pregelatinized starch	Magcobar
Palcotan	Lignosulfonate	1
Palcotan 905	Redwood bark extract	1
Peltex	Modified lignosulfonate	Alamo Lumber Co.
P-95	California clay	Macco Corp.
Polytone	Treated lignite	1
Pyro, Anhydrous	Pyrophosphate	1
Paraformaldehyde Preservative	Paraformaldehyde	1
Phosphate	Complex phosphates	1
QBT	Quebracho-based thinner	Mud Control Laboratories
Q-Broxin	Ferrochrome lignosulfonate	Baroid Div. National Lead Co.
Q-X Quebracho	Quebracho compound	Magcobar
Quebracho	Quebracho	1
Qualex	Sodium carboxymethyl-cellulose	1
Quick-Gel	Extra high yield bentonite	Baroid Div. National Lead Co.
Ray Flo	Hemlock extract	1
RD 111	Processes lignosulfonate	1
Ranger Pure Quebracho	Pure Quebracho	May Brothers, Inc.
Sapp	Sodium acid pyrophosphate	1
Spersene	Chrome lignosulfonate	Magcobar
Shale-Ban	Shale control compound	Baroid Div. National Lead Co.
Soda Ash	Soda ash	1
Sodium Bichromate	Sodium bichromate	1
Soltex	Mud lubricant	1
Super-Col	Extra high yield bentonite	Milwhite Mud Sales Co.
Superligco	Caustic lignite	Milwhite Mud Sales Co.
Shale-Rez	High pressure lubricant	Brown Mud Co.
Sodaphos	Phosphate	1
Superben	Wyoming bentonite	Superbar Sales
Superyield	Sub-bentonite	Superbar Sales
Super Quebracho	Quebracho mixture	Superbar Sales
Super Thin	Mineral lignite	Superbar Sales
Super Starch	Pregelatinized starch	Superbar Sales
Smentox	Cement contamination treating agent	Baroid Div. National Lead Co.
Tannex	Quebracho compound	Baroid Div. National Lead Co.
Tanco	Quebracho compound	Milwhite Mud Sales Co.
Tannathin	Lignite	Magcobar
Tower-Gel	Wyoming bentonite	Black Hills Bentonite
Treat	Causticized lignite	Atlas Mud Co.
TSPP	Tetra sodium pyrophosphate	1
T-8	Shale control mud	Magcobar
Uni-Cal	Modified alkyl aryl sulfonate	Milwhite Mud Sales Co.
Uni-Gel	Wyoming bentonite	United Engineering Corp.

Table D-1 (Continued). MATERIALS FOR DRILLING FLUID SYSTEMS

Product Trade Name	Description	Maker or Distributor
Fresh Water Muds (Cont.)		
Viz-Thin	Lignite pitch	1
Workover Clay	Low yield workover clay	Milwhite Mud Sales Co.
Wyo-Jel 200	Bentonite	Archer-Daniels-Midland
X-Cor	Corrosion inhibitor	Baroid Div. National Lead Co.
XP-20	Chrome lignite	Magcobar
Salt Water Muds		
Ala-Sol	Attapulgite clay	Alamo Lumber Co.
Alpine Gel	Attapulgite clay	Alpine Mud Service
Atlas Salt Gel	Attapulgite clay	Atlas Mud Co.
Atlosol S	Anionic-nonionic surfactant	Atlas Chemical Ind.
Attapulgus 150	Attapulgite clay	Min. & Chem. Philipp
Ceox	Emulsifier	Mud Control Laboratories
Controlfoam	Defoamer	Mud Control Laboratories
Cronox 609	Corrosion inhibitor	United Engineering Corp.
Defoamer No. 23	Mud defoamer	Baroid Div. National Lead Co.
Emulsifier S	Nonionic emulsifier	1
F-S Clay	Attapulgite clay	United Engineering Corp.
Florigel	Attapulgite clay	Floridin Co.
Florigel H-Y	Attapulgite clay	Floridin Co.
Heviwater	Mud dispersant	Dowell Div., Dow Chem.
Maysal Clay	Attapulgite clay	May Brothers, Inc.
Salt	Sodium chloride	1
Salt Gel	Attapulgite clay	Magcobar
Salt-Drill	Hemlock bark extract	1
Salt Water Gel	Attapulgite clay	Milwhite Mud Sales Co.
Super Sal	Attapulgite clay	Superbar Sales
Air/Gas Drilling Materials		
Afrox	Foaming agent	1
Atlas Corrosion Inhibitor 100	Polar organic	Atlas Mud Co.
Atlas Hi-Foam	Nonionic surfactant	Atlas Mud Co.
AM-9	Chemical grout	1
G-2	Foaming agent	Dowell Div., Dow Chemical
Gafen Fa-1	Foaming agent, fresh to mod. salt	Antara Chemical
Gafen Fa-5	Foaming agent, saturated salt	Antara Chemical
Gafen Fa-7	Foaming agent, fresh and saline	Antara Chemical
Halliburton-Sorb	Water absorbing agent	Halliburton Co.
Howco-Suds	Surfactant, foaming agent	Halliburton Co.
Hydro-Lok	Water Shutoff plastic slurry	Halliburton Co.
Oilfos	Deflocculating agent	1
OK Liquid	Foaming agent	1
Synfoam	Foaming agent	Mud Control Laboratories
Tergitol NP-35	Nonyl phenyl polyethylene glycol ether	1
Tergitol NPX	Nonyl phenyl polyethylene glycol ether	1
Tergitol TMN	Trimethyl nonyl ether of polyethylene glycol	1
Well-Foam FS	Foaming agent	Well Completions, Inc.
Well-Foam 3	Foaming agent	Well Completions, Inc.
Well-Foam 917	Corrosion inhibitor	Well Completions, Inc.
Well-Parch	Dryin and anti-ballin agent	Well Completions, Inc.
Invert Emulsion and Oil Muds		
Atlas-Invert 400	Polyoxyethylene product	Atlas Mud Co.
Black Magic Supermix	Fluid for high temp. wells	Oil Base, Inc.
Black Magic Premix	Oil fluid, not high weight	Oil Base, Inc.
Chemical V	Additive to Black Magic, improve gel	Oil Base, Inc.
Chemical W	Treating agent for Black Magic	Oil Base, Inc.
Control Invert	Oil mud concentrate	Mud Control Laboratories

Table D-1 (Continued). MATERIALS FOR DRILLING FLUID SYSTEMS

Product Trade Name	Description	Maker or Distributor
Invert Emulsion and Oil Muds (Cont.)		
Control Emulsion Oil	Nonionic surfactant	Mud Control Laboratories
Driloil	Oil mud concentrate	Baroid Div. National Lead Co.
Driltreat	Oil mud stabilizer	Baroid Div. National Lead Co.
Duratone	Oil mud filtration control agent	Baroid Div. National Lead Co.
Economagic	Crude-oil based completion fluid	Oil Base, Inc.
E-Z Mul	Emulsifier for CaCl solutions in oil	Baroid Div. National Lead Co.
Geltone	Oil mud gelling agent	Baroid Div. National Lead Co.
Hot Lime	Varifat lime	1
Invermul	Oil mud emulsifier	Baroid Div. National Lead Co.
Invertin	Emulsifier	Dowell Div., Dow Chemical
Jel-Oil	Oil mud	Magcobar
Ken Oil	Oil mud	1
Ken-X Concentrate 1	Invert emulsifier	1
Ken-X Concentrate 2	Stabilizer (weight)	1
Ken-X Concentrate 3	Stabilizer (temperature)	1
OB Mixfix	Viscosity reducer	Oil Base, Inc.
OB Gel	To increase viscosity	Oil Base, Inc.
Petrotone	Oil mud suspending agent	Baroid Div. National Lead Co.
Peptomagic	Crude oil-based fluid	Oil Base, Inc.
Perm-Base	Oil mud concentrate	Macco Corp.
Perm-Wate	Calcium carbonate	Macco Corp.
Protectomagic	Oil dispersed asphalt	Oil Base, Inc.
Protecto-Mul	Concentrate for invert emulsion	Magcobar
No-Bloc	Invert emulsion fluid	Magcobar
Special Additive 47	To improve suspension properties	Oil Base, Inc.
Special Additive 58	To improve suspension, gel properties	Oil Base, Inc.
Therm-oil	Invert emulsion concentrate	Milwhite Mud Sales Co.
Low Solids Muds		
Alloid	Pregelatinized starch	Alpine Mud Service
Anti-Foam	Capryl alcohol	Milwhite Mud Sales Co.
Atlas Emulso 500	Non-ionic surfactant	Atlas Mud Co.
Atlas Drilling Surfactant	Anionic surfactant	Atlas Mud Co.
Atlasfloc	Flocculating gum	Atlas Mud Co.
Barafloc	Clay flocculant	Baroid Div. National Lead Co.
Drilltex	Guar gum	1
Driscose	Sodium carboxymethyl-cellulose	1
Loloss	Gum Guar	Baroid Div. National Lead Co.
Lube Flow	Shale control	1
Mac-O-Mul	Non-ionic surfactant, emulsifier	Macco Corp.
Mudfloc	Highly active flocculating agent	Mud Control Laboratories
Separan	Flocculating agent	Milwhite Mud Sales Co.
Surface Active Agents		
Aluminum Stearate	Aluminum stearate	1
Atlas Drilling Surfactant 100	Anionic surface active emulsifier	Atlas Mud Co.
Atlas Drilling Surfactant 200	Petroleum sulfonate	Atlas Mud Co.
Atlas Drilling Surfactant 300	Nonionic surfactant	Atlas Mud Co.
Atlas Emulso 500	Nonionic surfactant	Atlas Mud Co.
Atlosol	Mixed esters	1
Ceox	Soluble oil-type surfactant	Mud Control Laboratories
Con Det	Anionic detergent	Baroid Div. National Lead Co.
Control M-D	Low solids mud additive	Mud Control Laboratories
Control Emulsion Oil	Anionic surface active emulsifier	Mud Control Laboratories
Control Flow	Oil-soluble surfactant	Mud Control Laboratories
Controlsol	Nonionic surfactant and emulsifier	Mud Control Laboratories

Table D-1 (Continued). MATERIALS FOR DRILLING FLUID SYSTEMS

Product Trade Name	Description	Maker or Distributor
Surface Active Agents (Cont.)		
D-D	Mud detergent	Magcobar
Drilling Milk	O/W emulsifier	Magcobar
Drill Lube	Surfactant, EP lubricant	1
DME	For compounding surfactant muds	1
DMS	For compounding surfactant muds	1
Emulsifier F	Nonionic surfactant	1
Emulsifier S	Nonionic surfactant	1
Maco-Mul	Nonionic surfactant, emulsifier	Macco Corp.
Maco-Lube	Surfactant, EP lubricant	Macco Corp.
Magconate	Petroleum sulfonate	Magcobar
Milwhite M-D	Low-solids mud additive	Milwhite Mud Sales Co.
Mil-Olox	Vegetable oil soap	Milwhite Mud Sales Co.
Olox	Neutralized soap	1
Santomerse	Sodium alkyl aryl sulfonate	1
Seeco-Mul	Vegetable oil soap	1
Trimulso	Emulsifier	Baroid Div. National Lead Co.
White Magic	Non-fluorescing emulsifier	Oil Base, Inc.
Weighting Materials		
Ala-Bar	Barite (barium sulfate)	Alamo Lumber Co.
Albar	Barite	Alpine Mud Service
Atlas Bar	Barite	Atlas Mud Co.
Baroid	Barite	Baroid Div. National Lead Co.
Controlbar	Barite	Mud Control Laboratories
Dri-Job	Low gravity barite	Macco Corp.
Drilling Bar	Barite	Drilling Mud, Inc.
G-7 Super Weight	Iron-arsenic compound	Magcobar
Galena	Lead sulfide	Baroid Div. National Lead Co.
Invertin Wate	Acid-soluble material	Dowell Div., Dow Chemical
Maccowate	Barite	Macco Corp.
Magcobar	Barite	Magcobar
Maybar	Barite	May Brothers
Mil-Bar	Barite	Milwhite Mud Sales Co.
OB Hevywate	Barite	Oil Base, Inc.
OB Wate	Calcium carbonate	Oil Base, Inc.
Superbar	Barite	Superbar Sales
Uni-Bar	Barite	United Engineering Corp.
Yuba Barite	Barite	Yuba Milling Div.
Lost Circulation Additives		
Ala-Fiber	Fibrous material	Alamo Lumber Co.
Ala-Flake	Shredded cellophane flakes	Alamo Lumber Co.
Ala-Mica	Shredded mica	Alamo Lumber Co.
Ala-Plug	Graded walnut shells	Alamo Lumber Co.
Alseal	Cane, wood fiber blend	Alpine Mud Service
Atlas Fiber	Sugar cane bagasse	Atlas Mud Co.
Atlas Mica	Sized mica	Atlas Mud Co.
Ala-Shell	Pecan shells	Alamo Lumber Co.
Alflake	Shredded cellophate flakes	Alpine Mud Service
Alpine Mica	Graded mica	Alpind Mud Service
Aspen Fiber	Aspen fibers	1
Bark-Seal	Shredded tree bark	Alpine Mud Service
Beaver Dam	Ground gilsonite	Gibralter Minerals
Bristex	Hog bristles	1
Bristex-Seal	Hog bristles and cotton lint	1
Cel-Flakes	Ground cellophane	United Engineering Corp.
Cell-O-Phane	Shredded cellophane flakes	1
Cell-O-Seal	Shredded cellophane flakes	Magcobar
Cedar Seal	Cedar fibers	1
Cert-N-Ceal	Delayed action bentonite, gran. mat.	1
Chek-Loss	Sized neoprene rubber	Milwhite Mud Sales Co.
Chip-Seal	Shredded wood fiber	Magcobar
Control Fiber	Fibrous material	Mud Control Laboratories

Table D-1 (Continued). MATERIALS FOR DRILLING FLUID SYSTEMS

Lost Circulation Additives (Cont.)

Product Trade Name	Description	Maker or Distributor
Control Wool	Acid-soluble mineral wool	Mud Control Laboratories
Cottonseed Hulls	Cottonseed hulls	1
Chemical W	Agent to form gel pills	Oil Base, Inc.
Chrome Leather	Shredded leather	Alamo Lumber Co.
Dick's Mud Seal	Ground paper	1
Feather Stop	Feathers	Milwhite Mud Sales Co.
Fiber-Seal	Blended fibers	Magcobar
Fibertex	Cane fibers	Baroid Div. National Lead Co.
Formaplug	Clay-cement	Magcobar
Formaseal	Air blown asphalt	Oil Base, Inc.
Flaxseal	Ground flax shive	Archer-Daniels-Midland
Hy-Seal	Ground paper	Baroid Div. National Lead Co.
Jelflake	Cellophane flakes	1
Ko-Seal	Granulated corn cobs	Mud Control Laboratories
King Seal	Textile fibers	Alamo Lumber Co.
Krevice Klog	Drop bags of granular bentonite	Baroid Div. National Lead Co.
Leather Floc	Leather fibers	Magcobar
Leather Seal	Leather fibers	Baroid Div. National Lead Co.
Leath-O	Leather fibers	Milwhite Mud Sales Co.
Magco-Fiber	Shredded wood fiber	Magcobar
Magco-Mica	Graded mica	Magcobar
Masterbridge	Extra-course almond shells	Masterseal Sales Corp.
Masterplug	Shaped rubber	Masterseal Sales Corp.
Masterseal	Almond shells	Masterseal Sales Corp.
Mayfiber	Cane, wood fiber blend	May Brothers
Mayflakes	Shredded cellophane flakes	May Brothers
Maymica	Grade mica	May Brothers
Micatex	Mica	Baroid Div. National Lead Co.
Mil-Cedar Plug	Cedar wood fibers	Milwhite Mud Sales Co.
Mil-Fiber	Sugar cane bagasse	Milwhite Mud Sales Co.
Milflake	Shredded cellophane flakes	Milwhite Mud Sales Co.
Milmica	Graded mica	Milwhite Mud Sales Co.
Mil-Plug	Pulverized walnut shells	Milwhite Mud Sales Co.
Mil Seal	Wood chips	Milwhite Mud Sales Co.
Mil-Wool	Fibrous mineral wool	Milwhite Mud Sales Co.
Mud Fiber	Cane fibers	Magcobar
Mica	Sized mica	1
Nut Plug	Ground walnut shells	Magcobar
Oil Patch	Ground walnut shells	Mud Control Laboratories
Palco Seal	Processed redwood fibers	1
Pheno-Seal	Ground plastic	1
Polyflake	Oil soluble film	Baroid Div. National Lead Co.
Poly-Plug	Fibers and plastic	Cherokee Laboratories
Poz-Plug	Wood chips	1
Plug-Git	Wood fibers	Baroid Div. National Lead Co.
Plastic Seal	Ground formica	Alamo Lumber Co.
Rubber Seal	Ground rubber	Atlas Mud Co.
Sealflakes	Fragmented cellulose	Mud Control Laboratories
Silvacel	Fir and balsum fiber	1
Stop-It	Cedar wood fibers	1
Strata-Seal	Expanded perlite	1
Super Fiber	Cane, wood fibers	Superbar Sales
Super Seal	Shredded cellophane flakes	Superbar Sales
Super Mica	Graded mica	Superbar Sales
Superbridge	Expanded perlite	Mud Control Laboratories
Tuffernell	Walnut shells	Macco Corp.
Tuf-Plug	Ground walnut shells	1
Wall-Nut	Nutshells	Baroid Div. National Lead Co.
Walnut Plug	Walnut shells	1
Wool	Mineral wool	1

[1] Several distributing companies

Source: Rogers, Walter F., Composition and Properties of Oil Well Drilling Fluids Houston, Texas, Gulf Publishing Company, 1963.

TECHNICAL REPORT DATA
(Please read Instructions on the reverse before completing)

1. REPORT NO. EPA-600/2-77-023b	2.	3. RECIPIENT'S ACCESSION NO.
4. TITLE AND SUBTITLE Industrial Process Profiles for Environmental Use: Chapter 2. Oil and Gas Production Industry		5. REPORT DATE February 1977
		6. PERFORMING ORGANIZATION CODE
7. AUTHOR(S) Glynda E. Wilkins		8. PERFORMING ORGANIZATION REPORT NO.
9. PERFORMING ORGANIZATION NAME AND ADDRESS Radian Corporation, 8500 Shoal Creek Boulevard, P.O. Box 9948, Austin, Texas 78766		10. PROGRAM ELEMENT NO. 1AB015
		11. CONTRACT/GRANT NO. 68-02-1319, Task 34 and 42
12. SPONSORING AGENCY NAME AND ADDRESS Industrial Environmental Research Laboratory, Office of Research and Development, U.S ENVIRONMENTAL PROTECTION AGENCY, Cincinnati, Ohio 45268		13. TYPE OF REPORT AND PERIOD COVERED Initial:8/75-11/76
		14. SPONSORING AGENCY CODE EPA/600/12
15. SUPPLEMENTARY NOTES		

16. ABSTRACT

The catalog of Industrial Process Profiles for Environmental Use was developed as an aid in defining the environmental impacts of industrial activity in the United States. Entries for each industry are in consistent format and form separate chapters of the study. The oil and gas production industry is involved in locating and retrieving oil and gas from underground formations and preparing the well streams for use by consumers. The industry is discussed in five segments: (1) Exploration and Site Preparation, (2) Drilling, (3) Crude Processing, (4) Natural Gas Processing, and (5) Secondary and Tertiary Recovery. Two process flow sheets and twenty process descriptions have been prepared to characterize the industry. Within each process description available data have been presented on input materials, operating parameters, utility requirements and waste streams. Data related to the subject matter, including company and product data, are included as appendices.

17. KEY WORDS AND DOCUMENT ANALYSIS

a. DESCRIPTORS		b. IDENTIFIERS/OPEN ENDED TERMS	c. COSATI Field/Group
Pollution	Process Descriptions	Air Pollution Control	07C
Oil Production	Industry Characterization	Water Pollution Control	11H
Gas Production		Process Assessment	13B
Exploration		Solid Waste Control	21D
Oil Drilling		Environmental Impact	
Crude Oil Processing		Stationary Sources	
Natural Gas Processing		Petroleum Industry	
		Oil, Crude Oil	

18. DISTRIBUTION STATEMENT Release to the Public	19. SECURITY CLASS (This Report) Unclassified	21. NO. OF PAGES 130
	20. SECURITY CLASS (This page) Unclassified	22. PRICE

EPA Form 2220-1 (9-73)