EPA-600/2-77-188
September 1977

Environmental Protection Technology Series

PHTHALIC ANHYDRIDE PLANT AIR POLLUTION CONTROL

Industrial Environmental Research Laboratory
Office of Research and Development
U.S. Environmental Protection Agency
Research Triangle Park, North Carolina 27711

RESEARCH REPORTING SERIES

Research reports of the Office of Research and Development, U.S. Environmental Protection Agency, have been grouped into five series. These five broad categories were established to facilitate further development and application of environmental technology. Elimination of traditional grouping was consciously planned to foster technology transfer and a maximum interface in related fields. The five series are:

1. Environmental Health Effects Research
2. Environmental Protection Technology
3. Ecological Research
4. Environmental Monitoring
5. Socioeconomic Environmental Studies

This report has been assigned to the ENVIRONMENTAL PROTECTION TECHNOLOGY series. This series describes research performed to develop and demonstrate instrumentation, equipment, and methodology to repair or prevent environmental degradation from point and non-point sources of pollution. This work provides the new or improved technology required for the control and treatment of pollution sources to meet environmental quality standards.

EPA REVIEW NOTICE

This report has been reviewed by the U.S. Environmental Protection Agency, and approved for publication. Approval does not signify that the contents necessarily reflect the views and policy of the Agency, nor does mention of trade names or commercial products constitute endorsement or recommendation for use.

This document is available to the public through the National Technical Information Service, Springfield, Virginia 22161.

EPA-600/2-77-188
September 1977

PHTHALIC ANHYDRIDE PLANT AIR POLLUTION CONTROL

by

C.T. Chi and T.W. Hughes

Monsanto Research Corporation
Station B, Box 8
Dayton, Ohio 45407

Contract No. 68-02-1320
Task No. 25
ROAP No. 21AXM-011
Program Element No. 1AB015

Project Task Officer: E.J. Wooldridge

Industrial Environmental Research Laboratory
Office of Energy, Minerals, and Industry
Research Triangle Park, N.C. 27711

Prepared for

U.S. ENVIRONMENTAL PROTECTION AGENCY
Office of Research and Development
Washington, D.C. 20460

CONTENTS

Figures v
Tables vii

1. Introduction 1
2. Summary 3
3. Conclusions and Recommendations 5
   3.1 Thermal Incinerator/Steam Generation System 5
   3.2 Wet Scrubber/MAN Recovery System 6
   3.3 Carbon Adsorber/Waste Incineration System 6
   3.4 Additional Considerations 6
4. Source Description and Present Control Practices 8
   4.1 Phthalic Anhydride Processes 8
      4.1.1 o-Xylene Based Process 8
      4.1.2 Naphthalene Based Process 13
   4.2 Comparison of o-Xylene and Naphthalene Based Processes 19
   4.3 Waste Gas Characterization 22
   4.4 Present Control Practices 24
5. Alternative Control Methods and Their Technical Evaluation 27
   5.1 Thermal Incinerator/Heat Recovery 28
      5.1.1 System Description 28
      5.1.2 Technical Evaluation for the Incinerator 30
         5.1.2.1 Thermodynamic Considerations 30
         5.1.2.2 Kinetic Considerations 31
         5.1.2.3 NO_x Formation and CO Reduction 36
         5.1.2.4 Conclusion 36
      5.1.3 Heat Recovery 37
   5.2 Catalytic Incinerator/Feed Gas Preheating 38
      5.2.1 System Description 38
      5.2.2 Technical Evaluation for the Incinerator 40
   5.3 Wet Scrubber/Waste Disposal 41
      5.3.1 System Description 41
      5.3.2 Technical Evaluation for the Scrubber 43
         5.3.2.1 Theoretical Considerations 43
         5.3.2.2 Practical Considerations 46
         5.3.2.3 Conclusion 47
      5.3.3 Liquid Waste Incineration 47
      5.3.4 Maleic Anhydride Recovery 49
         5.3.4.1 Process Description 49
         5.3.4.2 Technical Evaluation 51
      5.3.5 Biological Wastewater Treatment 52
         5.3.5.1 Process Description 52
         5.3.5.2 Technical Evaluation 55

CONTENTS (continued)

5.4 Carbon Adsorber/Waste Incineration 56
5.4.1 System Description 56
5.4.2 Technical Evaluation 60
5.4.3 Conclusion 61
5.5 Condensation/Fiber Bed Filtration 61
5.6 CHAUNY Process (Process Modification) 62
5.6.1 Process Description 62
5.6.2 Technical Evaluation 64
5.7 Summary of the Technical Evaluation 65
6. Economic Evaluation and Energy Requirements 67
6.1 Economic Evaluation 69
6.2 Energy Requirements 70
7. Most Feasible Alternatives and Recommended Demonstration Programs 72
7.1 Selection of Most Feasible Systems 72
7.2 Recommended Demonstration Programs 77
7.2.1 Thermal Incinerator/Steam Generation 77
7.2.1.1 Increase of Operating Temperature 77
7.2.1.2 Development of Improved Incinerator 79
7.2.1.2.1 Measurement of Temperature Distribution 79
7.2.1.2.2 Selection of burner and Mixing Devices 79
7.2.1.2.3 Full-Scale Demonstration 79
7.2.2 Wet Scrubber/MAN Recovery 80
7.2.2.1 Pilot-Scale Testing of Improved Scrubber 80
7.2.2.2 Full-Scale Demonstration of Scrubber 80
7.2.3 Carbon Adsorber/Waste Incineration 80
7.2.3.1 Laboratory-Scale Testing of Carbon Process 80
7.2.3.2 Full-Scale Operation of the System 81

References 82
Appendices

A. Material Balance for Existing, Improved, and New Control Systems 85
B. Cost Model and Economic Assumptions 92
C. Detailed Estimates of Capital, Capitalized and Operating Costs 95

FIGURES

Number		Page
1	Breakdown of phthalic anhydride production in the continental United States	9
2	BASF process for manufacture of phthalic anhydride from o-xylene	10
3	Badger-Sherwin-Williams process for manufacture of phthalic anhydride from naphthalene	15
4	Thermal incinerator with waste heat boiler	28
5	Thermal incinerator with feed gas preheater	29
6	Steps required for successful incineration of dilute fumes	30
7	Coupled effects of temperature and time on rate of pollutant oxidation	33
8	Hydrocarbon oxidation rates in absence of flame	35
9	Rhone-Poulenc catalytic afterburner for phthalic anhydride off-gases	39
10	Wet scrubber/waste disposal system	41
11	Schematic diagram of scrubber for phthalic anhydride plant	42
12	Vapor pressure vs. temperature	44
13	Schematic diagram of thermal incinerator for scrubber purge liquor	48
14	Maleic anhydride recovery process	50
15	An activated-sludge-based biological wastewater treatment system for 1977 BPCTCA requirements	53
16	Dual-media filters and granular carbon columns to be added to the BPCTCA system to form a BATEA system	54

FIGURES (continued)

Number		Page
17	Schematic diagram of the carbon adsorption/ incineration system	57
18	Adsorption efficiency of a carbon bed for a single organic compound	58
19	Adsorption efficiency of a carbon bed for a three-component mixture	59
20	Schematic diagram for the condensation/ filtration system	61
21	CHAUNY process for PAN manufacture	63

TABLES

Number		Page
1	Steam Code for BASF Process Illustrated in Figure 2	11
2	Steam Code for Badger-Sherwin-Williams Process Illustrated in Figure 3	16
3	Overall Material Balance for a 5.9×10^4 Metric Tons/Yr o-Xylene Based Phthalic Anhydride Plant	20
4	Overall Material Balance for a 5.9×10^4 Metric Tons/Yr Naphthalene Based Phthalic Anhydride Plant	21
5	Comparison of o-Xylene and Naphthalene Based Phthalic Anhydride Processes (5.9×10^4 Metric Tons/Yr)	22
6	Switch Condenser Off-Gas from a Representative o-Xylene Based Plant	23
7	Switch Condenser Off-Gas from a Representative Naphthalene Based Plant	24
8	Control Systems Presently used by the PAN Industry in the U.S.	26
9	Composition of the Purge Liquor from Scrubbing of the Waste Gas from a Representative o-Xylene Based Plant	51
10	Analysis of a Waste Stream from Condenser Off-Gas Wet Scrubber	55
11	Typical Analysis of Condenser Off-Gas from the CHAUNY Process	65
12	Summary of Technical Evaluation of Control Alternatives	66
13	Summary of Results of Economic Evaluation and Energy Requirement Study	68
14	Technical, Economic, and Energy Considerations for Thermal Incinerator/Steam Generation	73

TABLES (continued)

Number		Page
15	Technical, Economic, and Energy Considerations for Wet Scrubber/Waste Incineration System	74
16	Technical, Economic, and Energy Considerations for Wet Sctubber/MAN Recovery System	75
17	Technical, Economic, and Energy Considerations for Carbon Adsorber/Waste Incineration System	76
18	Summary of Estimated Cost and Time Requirements for the Recommended Demonstration Programs	78
A-1	Overall Material Balance for a Typical Existing Thermal Incinerator/Steam Generation System	85
A-2	Overall Material Balance for a Typical Existing Thermal Incinerator/Feed Gas Preheating System	86
A-3	Overall Material Balance for a Typical Existing Wet Scrubber/Waste Incineration System	87
A-4	Overall Material Balance for an Improved Thermal Incinerator/Steam Generation System	88
A-5	Overall Material Balance for an Improved Wet Scrubber/Waste Incineration System	89
A-6	Overall Material Balance for a New Wet Scrubber/MAN Recovery System	90
A-7	Overall Material Balance for a Carbon Adsorber/ Waste Incineration System	91
C-1a	Capital Cost of a Typical Existing Thermal Incinerator/Steam Generation System	96
C-1b	Operating Cost of a Typical Existing Thermal Incineration/Steam Generation System	96
C-2a	Capital Cost of a Typical Existing Thermal Incinerator/Feed Gas Preheating System	97
C-2b	Operating Cost of a Typical Existing Thermal Incinerator/Feed Gas Preheating System	97
C-3a	Capital Cost of a Typical Existing Wet Scrubber/ Waste Incineration System	98

TABLES (continued)

Number		Page
C-3b	Operating Cost of a Typical Existing Wet Scrubber/ Waste Incineration System	98
C-4a	Capital Cost of an Improved Thermal Incinerator/ Steam Generation System	99
C-4b	Operating Cost of an Improved Thermal Incinerator/ Steam Generation System	99
C-5a	Capital Cost of an Improved Wet Scrubber/Waste Incineration System	100
C-5b	Operating Cost of an Improved Wet Scrubber/Waste Incineration System	100
C-6a	Capital Cost of a New Wet Scrubber/MAN Recovery System	101
C-6b	Operating Cost of a New Wet Scrubber/MAN Recovery System	101
C-7a	Capital Cost of a New Carbon Adsorber/Waste Incineration System	102
C-7b	Operating Cost of a New Carbon Adsorber/Waste Incineration System	102
C-8a	Capital Cost of a Typical Existing o-Xylene Based PAN Manufacturing Plant	103
C-8b	Operating Cost of a Typical Existing o-Xylene Based PAN Manufacturing Plant	103
C-9a	Capital Cost of the CHAUNY PAN Manufacturing Process	104
C-9b	Operating Cost of the CHAUNY PAN Manufacturing Process	104

SECTION 1

INTRODUCTION

The Industrial Environmental Research Laboratory (IERL) of EPA has the responsibility for insuring that air pollution control technology is available for stationary sources. If control technology is unavailable, inadequate, uneconomical, or socially unacceptable, then IERL financially supports the development of the needed control techniques. Approaches considered include: process modifications, feedstock modifications, add-on control devices, and complete process substitution.

The decision to develop additional control technology is based on information provided to EPA in the form of a source assessment. The information necessary to determine the need to develop control technology includes: 1) identification and quantification of the emissions of criteria pollutants, hazardous pollutants, and potentially toxic materials, and 2) the hazard potential of the materials emitted relative to permissible concentration levels of the materials.

A source assessment of phthalic anhydride manufacture indicated that this industry is a source of particulate, nitrogen oxides, sulfur oxides, carbon monoxide, and hydrocarbons from its *ortho*-xylene (herein designated as o-xylene) and naphthalene based processes. Through this source assessment IERL has determined that hydrocarbon emissions, particularly maleic anhydride (MAN) and phthalic anhydride (PAN) from the main process vent stream (from both o-xylene and naphthalene based processes) represent a potential air pollution problem.[1] This is true despite the fact that the emissions are being reduced by 96.5% using dual incineration. Therefore, EPA decided that control technology must be developed to reduce these emissions by 99% to eliminate the potential problems.

---

[1]Serth, R. W., and T. W. Hughes. Source Assessment: Phthalic Anhydride. Contract 68-02-1874, U.S. Environmental Protection Agency, Research Triangle Park, North Carolina, 1976. 144 pp.

Monsanto Research Corporation was contracted by EPA to evaluate the technical and economic feasibility of control system candidates for abating air emissions from phthalic anhydride manufacture. The objective of this study was to select the control system that shows the most promise for reducing, by 99%, maleic and phthalic anhydride emissions from the main process vent streams of the manufacturing processes.

This study involves: 1) characterization of the waste gas from manufacturing processes; 2) survey of the present control practices in the industry; 3) theoretical determination of the possibility of improving existing control technology to obtain the control efficiency desired; 4) identification of existing, improved, and emerging unit processes that can be used to construct alternative control systems; 5) technical evaluation of alternative control systems, including manufacturing process modification, to select technically feasible candidate systems; 6) economic evaluation and energy requirement study for existing and candidate add-on control systems, conventional PAN manufacturing process, and modified manufacturing process; 7) selection of most promising control alternatives; and 8) recommendation of demonstration programs for the most promising alternatives.

SECTION 2

SUMMARY

There are currently ten phthalic anhydride (PAN) plants in the U.S. One plant does not have control devices for air emissions from the condenser off-gas (main process vent gas). Five plants utilize direct thermal incineration, with either feed gas preheating or steam generation for waste heat recovery. These control systems have total organic removal efficiencies in the range of 80% to 96.5%. Two plants use wet scrubbers for the off-gas and incinerators for the scrubber purge liquor, with a reported overall organics removal of 96%. One of these two plants has recently installed a maleic anhydride (MAN) recovery process for treating part of the scrubber purge liquor. The ninth plant employs a wet scrubber and a biological waste treatment facility. The tenth plant uses a wet scrubber only. The control efficiencies for the last two plants are not available.

The efficiencies of the existing control systems are mainly determined by the design and performance of their corresponding direct thermal incinerators and wet scrubbers. Theoretical analysis was therefore performed for these two devices to determine whether they can be improved to achieve at least a 99% efficiency for control of PAN and MAN in the condenser off-gas.

The analysis for thermal incinerators utilized thermodynamics, reaction kinetics, and reported conversion at different operating conditions. This analysis revealed that 99% conversion can be obtained by increasing the mixed gas temperature of the best unit incinerator in the PAN industry to about 860°C. It was also concluded that the same improvement in control efficiency can be accomplished by increasing the residence time in the combustion chamber by 55%.

The analysis of wet scrubbers included considerations of equilibrium vapor pressure, solubility of PAN and MAN at different conditions, and removal of solid deposits in the scrubber. This analysis suggested that a three-stage scrubber, consisting of two fluid-bed stages and a packed-bed stage, would be able to remove both MAN and PAN at greater than 99% efficiency.

Eight add-on control systems and one modified manufacturing process (with its control device included) were identified for technical evaluation. These alternatives were derived so as to ensure that they will generate no secondary pollution problems

and will recover energy when applicable. The technical evaluation of these alternatives included their: 1) ability to reduce PAN and MAN emissions by 99%, 2) applicability to both the o-xylene and naphthalene based PAN processes, 3) design and operating parameters for achieving 99% control efficiency, 4) unique operating or maintenance requirements, and 5) other technical advantages and disadvantages.

As a result of the technical evaluations, four new add-on candidate control systems and a modified manufacturing process were identified as technically feasible alternatives; they were subjected to further economic evaluation and energy usage study. These alternatives are direct thermal incinerator/steam generation, wet scrubber/waste incineration, wet scrubber/MAN recovery, carbon adsorber/waste incineration, and the CHAUNY PAN manufacturing process. Economic evaluation included estimation of capital, capitalized and operating costs. The energy requirement study considered the following items, where appropriate: 1) fuel consumed in incinerator, 2) fuel needed for steam generation, 3) energy needed for generating electricity, and 4) energy contained in the steam recovered.

Among the add-on control systems, the thermal incinerator/steam generation is characterized by the highest operating cost and the highest energy consumption. The wet scrubber/MAN recovery system has the highest capital and capitalized cost, but at the same time it has a negative operating cost, meaning that there is a net profit from the system if the product is marketed. The carbon adsorber/waste incineration system has the lowest capital cost and energy consumption. The difference in capital and operating costs between the conventional manufacturing process and the CHAUNY process is negligible. However, the CHAUNY process is much less energy intensive, consuming only one-seventh of the energy required for the conventional process.

SECTION 3

CONCLUSIONS AND RECOMMENDATIONS

Ninety-nine percent reduction of maleic anhydride and phthalic anhydride emissions from phthalic anhydride plants appears to be both technically and economically feasible. Based on a comparison of the advantages and disadvantages found in the technical, economic and energy consumption evaluations, the most feasible add-on control systems for existing plants are the following: thermal incinerator/steam generation, wet scrubber/MAN recovery, and carbon absorber/waste incineration. The most feasible technology for new plants is the CHAUNY process although the current technologies in the U.S. could be used if the above add-on systems were also employed.

Because of the current energy crisis, it is important that, insofar as practicable, accomplishment of emissions control be accompanied by increased product yield and decreased energy consumption. Hence, long term solutions must be considered along with those providing immediate emissions reductions.

The recommended demonstration programs for the most feasible add-on systems are based on the development stage of the individual unit operations comprising the control systems and the technical evaluation of each system. They are summarized in the following subsections.

3.1 SHORT-TERM MEASURES

The short-term measures involve only the use of the thermal incinerator/steam generation add-on control system. For the two plants which currently use this system, 99% reduction of maleic anhydride and phthalic anhydride emissions could be achieved by increasing the operating temperature to about 860°C. The higher incineration temperatures are acceptable only as a temporary expedient since this mode of operation increases the plant's consumption of natural gas by 11%.

Better short term solutions may be available for plants which may use a thermal incinerator/steam generation system in the future. The first alternative appears to be to increase the

contact time of the flue gas in the incinerator. Theoretical calculations indicate that a 55% increase in the combustion volume may provide a 99% reduction in maleic anhydride and phthalic anhydride emissions. Another alternative appears to improve the burner design thereby increasing the turbulence in the combustion zone.

Use of the thermal incinerator/steam generation system results in two advantages which should not be overlooked. The system can be used to replace a portion of a phthalic anhydride plant's boilers. It will also control carbon monoxide emissions which may be required by state or local EPA agencies.

3.2 PERMANENT MEASURES

The permanent measures involve the use of add-on control devices which reduce emissions of maleic anhydride and phthalic anhydride without imposing an energy penalty on the plants. There are two alternatives which warrant further study. These are the wet scrubber/MAN recovery and carbon absorber/waste incineration.

Development of a wet scrubber along with maleic anhydride and phthalic anhydride recovery should be pursued. Wet scrubber data should be sought from industry which will permit the design of 99% efficient scrubbers. Concurrent with this, a process should be developed for recovering both maleic anhydride and phthalic anhydride from the scrubber liquid purge (blowdown). The demonstration program should include:

1. Pilot plant testing of the improved three-stage scrubber design recommended in the design study (Section 7.2.2.1).

2. Full-scale demonstration of the improved wet scrubber and waste product recovery processes (Section 7.2.2.2).

Development of a carbon absorber/waste incineration add-on control system should be pursued. High priority should be given to obtaining laboratory-scale and/or pilot-scale data on the use of activated carbon for emissions control. Specifically, the absorptive capacity and the regeneration efficiency of the activated carbon for maleic anhydride, phthalic anhydride and by-product organic materials need to be demonstrated. Applicability of a maleic anhydride and phthalic anhydride recovery process for the adsorbed materials should be determined. In the event that the recovery process is not feasible, then incineration of the recovered organics is needed. Initial development should be made at the laboratory scale. If the laboratory results are sufficiently promising, development work should follow at the pilot-scale level.

Use of either a scrubber or an activated carbon recovery system will not control carbon monoxide emissions. If this is required by a state or local EPA agency, an additional control device, probably an incinerator, will be needed.

SECTION 4

SOURCE DESCRIPTION AND PRESENT CONTROL PRACTICES

4.1 PHTHALIC ANHYDRIDE PROCESSES

Phthalic anhydride (PAN) is manufactured by the catalytic vapor-phase oxidation of either o-xylene of naphthalene. In 1975, 67% of the PAN produced in the continental United States was obtained from o-xylene and 33% from naphthalene as shown in Figure 1.

4.1.1 o-Xylene Based Process

Phthalic anhydride is presently produced in the United States from o-xylene by the von Heyden process, which is licensed in somewhat different forms by Chemiebau and Lurgi, and by the Badische Anilin und Soda-Fabrik (BASF) process, developed in the late 1960s. In 1975, 79% of the o-xylene based production in the continental United States involved use of the BASF process and 21% utilized the von Heyden process.[2,3] Figure 2 is a schematic flow diagram for the BASF process. The numbered streams in Figure 2 are identified in Table 1.

The vapor-phase oxidation of o-xylene to phthalic anhydride takes place on a vanadium pentoxide catalyst. The reaction can be represented by the following equation:

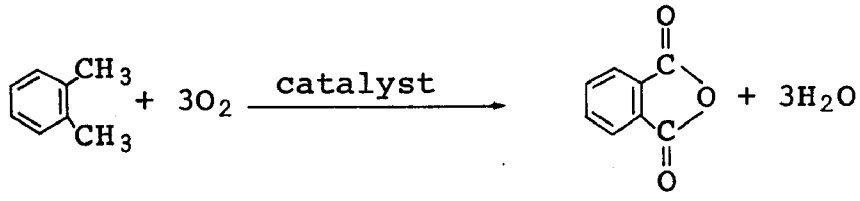

o-xylene oxygen phthalic anhydride water

The theoretical yield is 140 kg PAN/100 kg o-xylene.

---

[2]Anderson, E. V. Phthalic Anhydride Makers Foresee Shortage. Chemical and Engineering News, 53(26):10-11, 1975.

[3]Phthalic Anhydride. Chemical Marketing Reporter, 207(1):9, 1974.

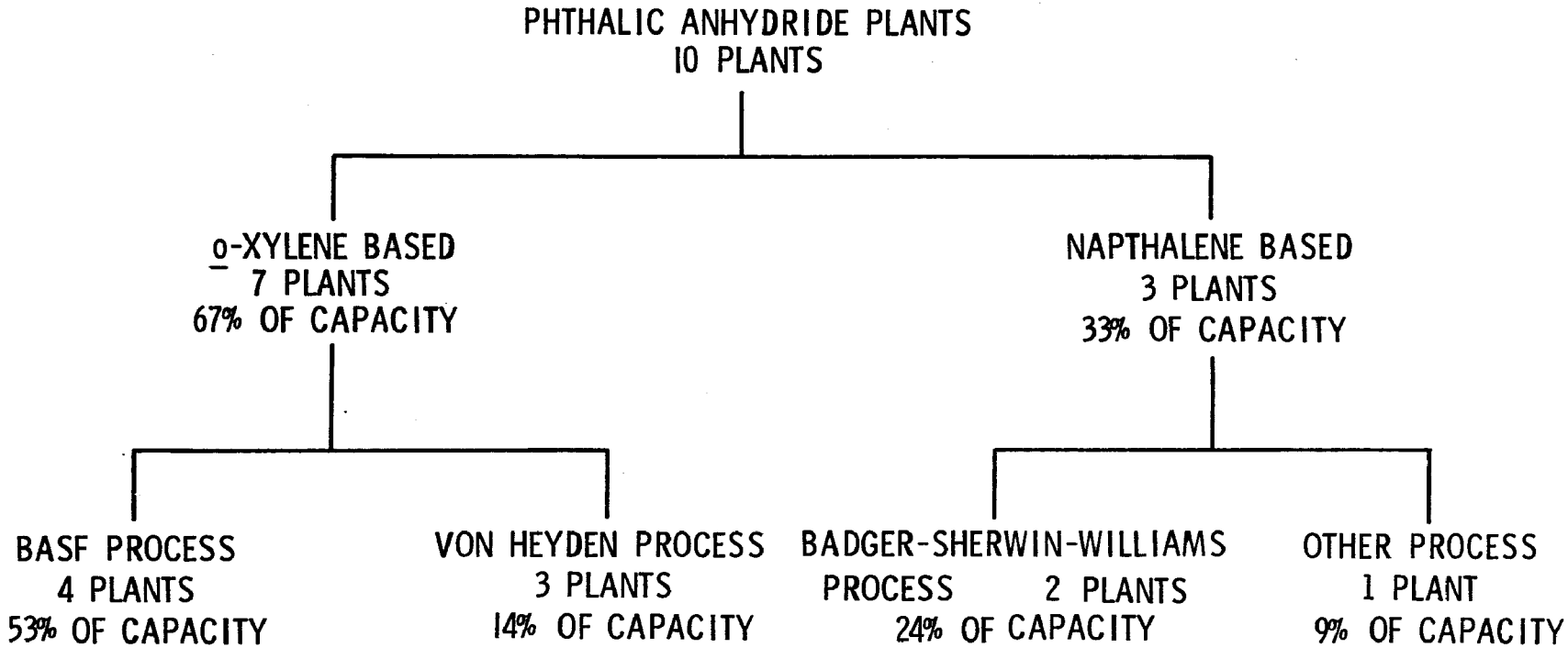

Figure 1. Breakdown of phthalic anhydride production in the continental United States.

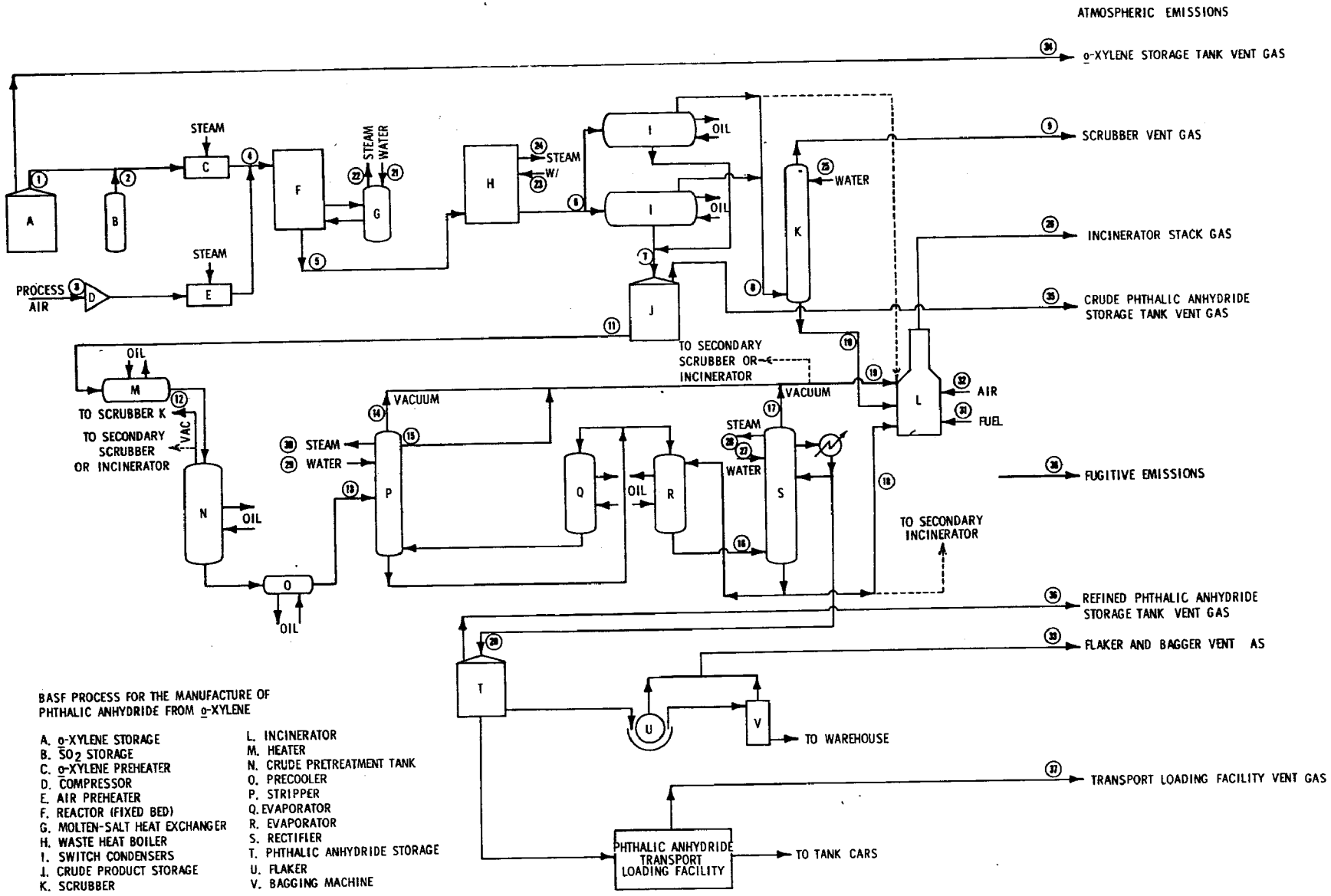

Figure 2. BASF process for manufacture of phthalic anhydride from o-xylene.

TABLE 1. STREAM CODE FOR BASF PROCESS ILLUSTRATED IN FIGURE 2

Stream	Identification	Stream	Identification
1	o-Xylene feed	20	Refined PAN
2	Sulfur dioxide	21	Water to steam generator
3	Filtered air	22	Generated steam
4	Reactor feed	23	Water to waste-heat boiler
5	Reactor product	24	Steam from waste-heat boiler
6	Boiler effluent	25	Scrubber makeup
7	Crude product	26	Incinerator stack gas
8	Condenser off-gas	27	Water to cooling coil
9	Scrubber vent	28	Steam from cooling coil
10	Scrubber liquid purge	29	Water to cooling coil
11	Crude PAN product	30	Steam from cooling coil
12	Pretreatment exhaust	31	Incinerator fuel
13	Pretreated crude	32	Combustion air
14	Stripping column exhaust	33	Flaker and bagger vent
15	Stripping column overhead	34	o-Xylene storage vent
16	Rectifying column feed	35	Crude product storage vent
17	Rectifying column vacuum exhaust	36	Refined PAN storage vent
18	Rectifying column bottom product	37	Loading facility vent
19	Distillation light ends	38	Fugitive emissions

The principal side reactions are the result of the further oxidation of phthalic anhydride to maleic anhydride, carbon oxides, and water. Based on the work of Bernardini and Ramacci,[4] the main sequence of reactions in the oxidation of o-xylene is as follows:

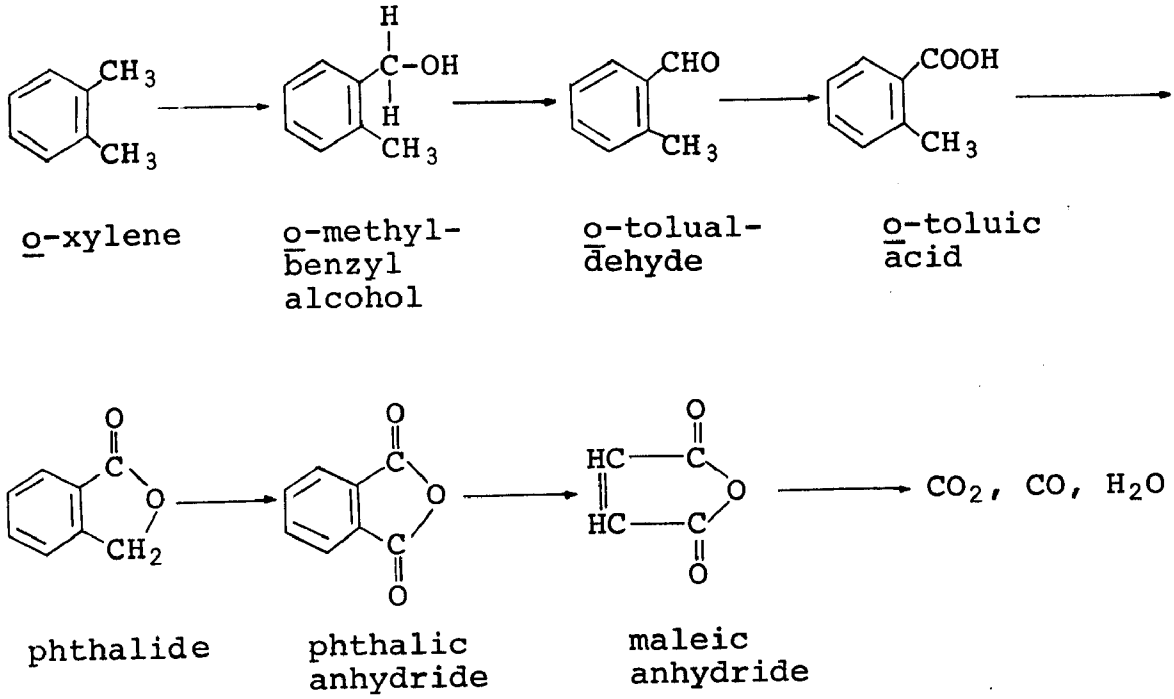

Filtered air (stream 3) is compressed to a gage pressure of 48.2 kPa to 55.2 kPa and preheated to 149°C using steam. The liquid xylene feed is also preheated and vaporized by injection into the hot air stream. A small amount (0.5% to 2.5% by weight) of sulfur dioxide (stream 2) is added to the feed stream in order to maintain catalyst activity. In the BASF process, the weight ratio of air to xylene in the feed stream (stream 4) to the reactor (unit F) is 25, which is equivalent to 1 mole percent xylene in the feed to the reactor. (Weight ratios as low as 20 and as high as 34 have been reported in the literature.[5]) Excess air is employed to ensure that the mixture is below the lower explosive limit of 1.5 mole percent o-xylene. After removal of unvaporized feed, the reactants are fed to the fixed-bed reactor, which operates at about 380°C within a range of 300°C to 390°C.

---

[4]Bernardini, F. and M. Ramacci. Oxidation Mechanism of o-xylene to Phthalic Anhydride. Chimica e l'Industria (Milan), 48(1):9-17, 1966.

[5]Spitz, P. H. Phthalic Anhydride Revisited. Hydrocarbon Processing, 47(11):162-168, 1968.

A molten salt (sodium-potassium nitrate-nitrite eutectic[6]) is circulated on the shell side of the reactor to remove the heat produced in the exothermic reaction. The molten salt passes through an external heat exchanger (unit G) where high pressure steam is produced. The gases leave the reactor at 375°C (stream 5) and pass through a waste heat boiler (unit H) for additional steam generation. The process vapors then pass from this waste heat boiler to the switch condenser where the crude PAN product is separated from the process air stream.

Due to the excess (567%) of air employed in the reactor, the partial pressure of the phthalic anhydride in the reactor effluent gas stream is such that the dew point is below the melting point (130.8°C) of phthalic anhydride. Hence, the product condenses as a solid. This operation is carried out in a parallel bank of tubular condensers (unit I) which are alternately heated and cooled by separate heat-transfer oil streams on an automatically controlled cycle. During the cooling portion of the cycle, phthalic anhydride crystallizes on the outer surfaces of the finned tubes. During the heating portion of the cycle, the solid phthalic anhydride is melted and then transferred to the crude product storage tank (unit J). It is the process gas leaving these condensers that offers the greatest potential for an air pollution problem. The control of emissions from this stream is the center of this study. For illustrative purposes, a wet scrubber and a liquid waste incinerator (units K and L) are shown in Figure 2 for control of this stream.

The crude product which contains 99% to 99.5% phthalic anhydride as phthalic acid is stored at 149°C under atmospheric pressure. The refining operation consists of two steps: a heat treatment step followed by a vacuum distillation. The crude product (stream 11) passes through a preheater (unit M) and then to the pretreatment tank (unit N), where it is held at an elevated temperature under vacuum for 8 to 12 hours. The purpose of the heat treatment is to decompose color-forming compounds and to convert them to higher molecular weight materials that can be separated from the main product by distillation. At the same time, dissolved phthalic acid is dehydrated to the anhydride, and the associated water and other low-boiling materials, such as maleic anhydride and benzoic acid, are partially evaporated and removed through the vacuum jet ejector exhaust stream (stream 12). This exhaust stream is sent to either the main control device (unit K) or a separate control device (which may be another scrubber or another incinerator). The pretreatment tank is discharged to a continuous distillation system consisting of a stripping column (unit P) and a rectifying column (unit S), both of which operate in the range of 2.67 kPa to

---

[6]Schwab, R. F., and W. H. Doyle. Hazards in Phthalic Anhydride Plants. Chemical Engineering Progress, 66(9):49-53, 1970.

26.7 kPa absolute pressure. The discharge stream passes through a precooler (unit O) and enters the stripping column at about 186°C. Maleic anhydride and benzoic acid are separated in the overhead stream (stream 15) which is sent to the main incinerator (unit L) or to a secondary control device (via stream 19) for disposal. The bottom stream from the stripping column passes to the evaporators (reboilers, units Q and R). Part of the stream is recycled to the stripping column, and the remainder (stream 16) enters the rectifying column (unit S).

The bottom stream (stream 18) from the rectifying column (the residue) is sent to the main incinerator or a secondary incinerator for disposal. Phthalic anhydride (99.99%) is taken overhead, condensed, and sent to the product storage tank (unit T) where it is stored at atmospheric pressure and 149°C.

The phthalic anhydride in the storage tanks can be pumped to tank cars for shipment as a liquid, or it can be sent to a flaking machine (unit U) for solidification. The flaked product is weighed and packaged in 36-kg bags by a bagging machine (unit V).

4.1.2 Naphthalene Based Process

All of the phthalic anhydride currently produced from naphthalene in the United States is made via the fluid-bed process. Two of the three plants now in operation, which account for 73% of the naphthalene based production, use the Badger-Sherwin-Williams process, first commercialized in the early 1960s. The Koppers Company plant in Bridgeville, Pennsylvania, uses a fluid-bed process developed by American Cyanamid, which built and operated the plant in the 1950s. This process was never licensed, and the plant was eventually taken over by Koppers when they acquired all of Cyanamid's facilities at the Bridgeville location.[5] Figure 3 is a schematic flow diagram for the Badger-Sherwin-Williams process, which is described below. Process streams numbered in Figure 3 are identified in Table 2.

The vapor-phase oxidation of naphthalene to phthalic anhydride on a vanadium oxide catalyst can be represented by the following equation:

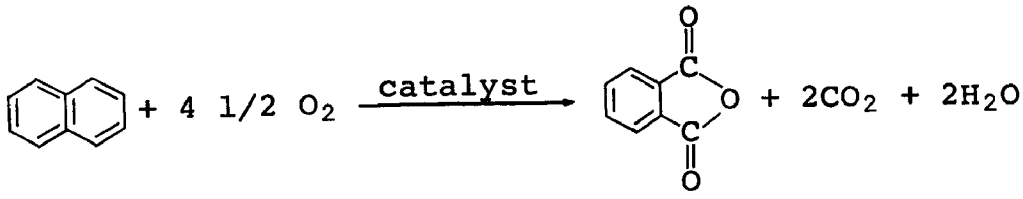

naphthalene oxygen phthalic anhydride carbon dioxide water

Theoretical yield is 116 kg PAN/100 kg naphthalene.

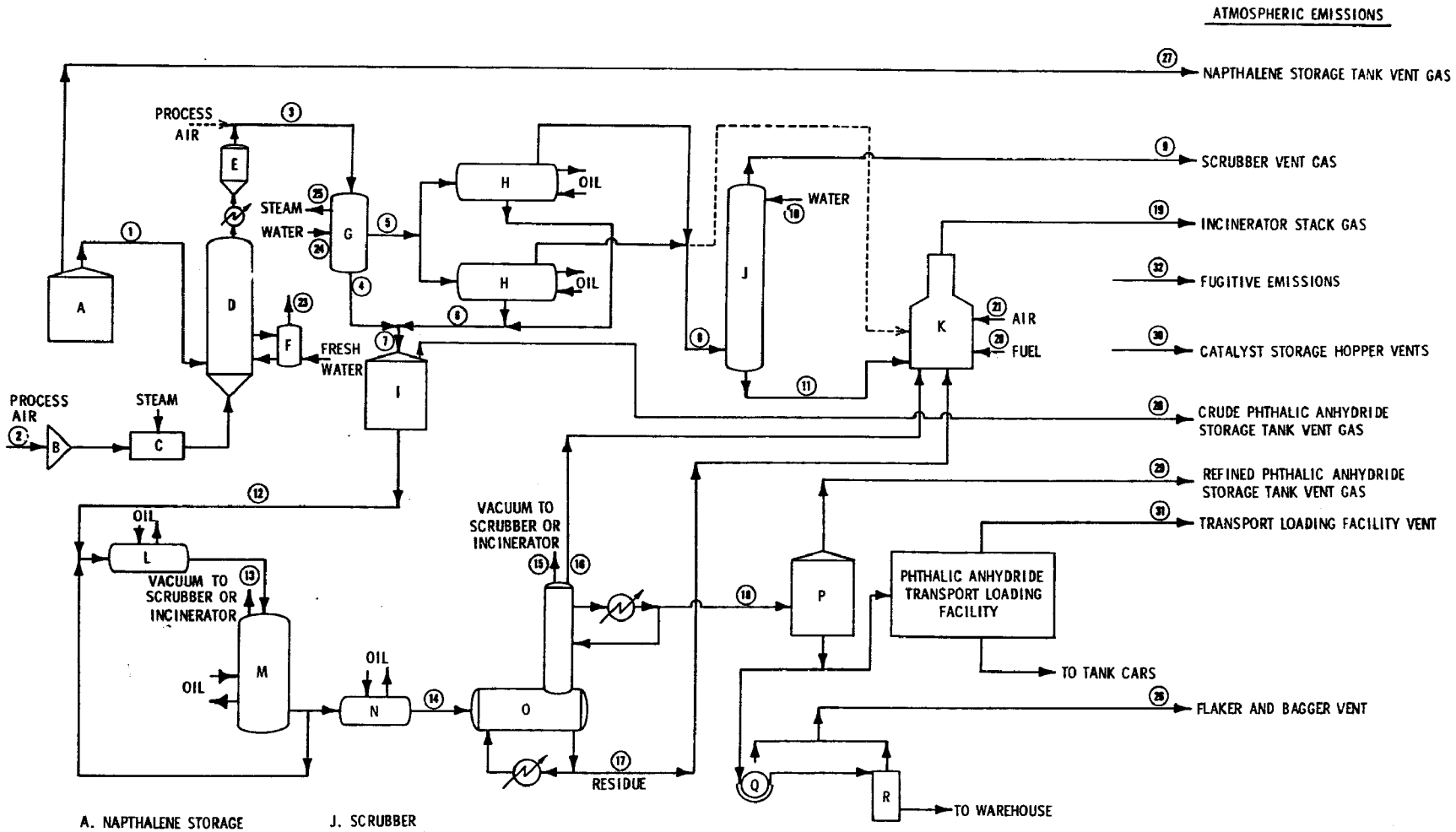

Figure 3. Badger-Sherwin-Williams process for manufacture of phthalic anhydride from naphthalene.

TABLE 2. STREAM CODE FOR BADGER-SHERWIN-WILLIAMS PROCESS ILLUSTRATED IN FIGURE 3

Stream	Identification	Stream	Identification
1	Naphthalene	17	Distillation column bottom product
2	Air	18	Refined PAN
3	Reactor product	19	Incinerator stack gas
4	Crude from partial condenser	20	Incinerator fuel
5	Partial condenser off-gas	21	Combustion air
6	Crude from switch condenser	22	Water to steam generator
7	Crude product	23	Generated steam
8	Switch-condenser off-gas	24	Cooling water
9	Scrubber vent	25	Steam
10	Scrubber makeup	26	Flaker and bagger vent
11	Scrubber liquid purge	27	Naphthalene storage vent
12	Crude PAN	28	Crude product storage vent
13	Pretreatment vacuum exhaust	29	PAN storage vent
14	Distillation column feed	30	Catalyst storage hopper vents
15	Distillation column vacuum exhaust	31	Loading facility vent
16	Distillation column light ends	32	Fugitive emissions

The side reactions are the consequence of the further oxidation of phthalic anhydride to maleic anhydride, carbon oxides, and water. Based on the work of Ioffe, et al.,[7] the main sequence of reactions in the oxidation of naphthalene is as follows:

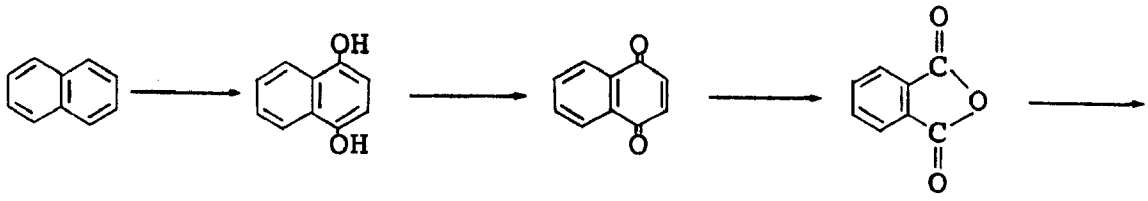

naphthalene 1,4-dihydroxy-naphthalene 1,4-naphtho-quinone phthalic anhydride

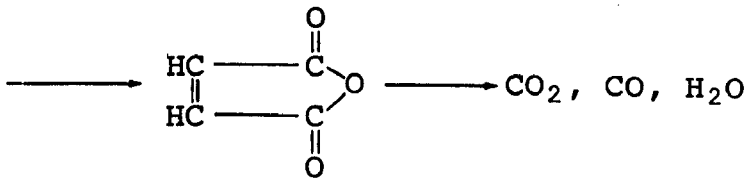

maleic anhydride

Feed materials used in the Badger-Sherwin-Williams process consist of naphthalene and air. Filtered air (stream 2 in Figure 3) is compressed and heated to]49°C. The hot air then enters the bottom of the reactor (unit D) and passes through an air distributor plate before entering the fluidized catalyst bed. Liquid naphthalene (stream 1), which is stored at 90°C to 102°C, is pumped from the storage tank (unit H) and injected directly into the fluidized bed above the air distributor plate. The naphthalene is immediately vaporized and dispersed throughout the bed upon contact with the hot catalyst and reaction air.

In the Badger-Sherwin-Williams process, the weight ratio of air to naphthalene fed to the reactor is 10:1 to 12:1, which places the mixture within the explosive limits.[8] This low air-to-naphthalene ratio is made possible by the inerting effect of the

---

[7]Ioffe, I. I., et al. Kinetics and Vapor Phase Oxidation Mechanism of Aromatic Hydrocarbons, VI. Zhurnal Fizicheskoi Khimii (Journal of Physical Chemistry), 29(4):692-698, 1955.

[8]Graham, J. J., P. F. Way, and S. Chase. Phthalic Anhydride by Fluid Bed Process. Chemical Engineering Progress, 58(1):96-100, 1962.

fine catalyst particles in the fluidized bed reactor.[8] Within the fluid bed, a uniform temperature is maintained (to ± 5°C) in the range of 340°C to 380°C.[9] Reactor pressure is set by the backpressure of equipment downstream.

Removal of the heat produced by the exothermic reaction is accomplished by means of cooling tubes located directly in the catalyst bed. Water is circulated in these tubes and steam is thereby generated directly without the need of a secondary heat-transfer fluid.

Effluent gases leaving the reactor are cooled to about 260°C before entering the catalyst filter unit (unit E) in order to prevent secondary reactions taking place on the filters. The entrained catalyst particles are separated from the gas stream by specially designed porous ceramic filter elements. Process air is used to periodically blow back the filters, and the catalyst particles are returned directly to the reactor bed.

Due to the low air-to-naphthalene ratio employed in the fluid-bed process, the crude phthalic anhydride is recovered both as a liquid and a solid. Between 40% and 60% of the product is obtained directly as a liquid in the partial condenser (unit G), and the remainder is condensed as a solid in the switch condensers (unit H). The latter operate in the same manner as those described for the BASF process. However, the partial condensation of product, plus the reduced air rate, greatly reduces the load on the switch condensers with a concomitant reduction in size and cost. The tail gases (stream 8) leave the switch condensers at 66°C and are sent either to a water scrubber (unit J) or directly to the incinerator (unit K) or other control devices. In Figure 3, a scrubber followed by an incinerator is shown for illustrative purposes.

The crude product is stored as a liquid at 149°C and atmospheric pressure (unit I). Crude phthalic anhydride (stream 12) from the crude product storage tank passes through a preheater (unit L) and then to the pretreatment tank (unit M) in much the same manner as in the BASF process. Treating chemicals consisting of maleic anhydride (1 g per kg PAN), and sodium hydroxide (0.05 g per kg PAN) are added to promote the pretreatment process. In the Badger-Sherwin-Williams process, the final product is obtained by means of a batch distillation column which operates at an absolute pressure of 2.66 kPa. The light ends (stream 16) are taken off at a reflux ratio of 40 and sent to the incinerator for disposal. The main cut is then taken at a reflux ratio of 1,

---

[9]Graham, J. J. The Fluidized Bed Phthalic Anhydride Process. Chemical Engineering Progress, 66(9):54-58, 1970.

condensed, and sent to the phthalic anhydride storage tank (unit P), where it is held at 149°C and atmospheric pressure. The residue, or bottoms product, is sent to the incinerator.

The refined phthalic anhydride (99.7% minimum) can be pumped to tank cars for shipment in liquid form, or it can be sent to flaking and bagging machines (units Q and R) for shipment as a solid.

4.2 COMPARISON OF O-XYLENE AND NAPHTHALENE BASED PROCESSES

The flow diagram for the BASF process for the manufacture of phthalic anhydride from o-xylene was given in Figure 2. Table 3 is an overall material balance for a typical 5.9 x 10^4 metric tons/yr plant.[1] The flow diagram for the Badger-Sherwin-Williams process for phthalic anhydride manufacture from naphthalene was given in Figure 3. Table 4 is an overall material balance for a typical 5.9 x 10^4 metric tons/yr plant.[1]

Table 5 presents a comparison of the o-xylene and naphthalene based phthalic anhydride processes derived from data presented in Tables 3 and 4. Based on the data shown in Table 5, the following conclusions about process yields and losses can be made:

1. The selection of o-xylene or naphthalene as a feedstock in the manufacture of phthalic anhydride is based on the cost of the feedstock since the yields on a kg PAN/kg FEED are essentially equal.

2. The naphthalene based process is a more selective process for PAN production since its yield on a moles PAN/moles FEED is higher than the o-xylene based process.

3. The naphthalene based process emits 24% more carbon from the switch-condenser off-gas than does the o-xylene based process as expected from its process chemistry (deliberate byproduct formation of carbon dioxide).

4. The o-xylene process emits 150% more organic material than does the naphthalene based process.

5. The o-xylene process also emits 200% more carbon monoxide than does the naphthalene based process.

6. The amount of total PAN and MAN losses are 483 kg/hr and 199 kg/hr for the o-xylene and naphthalene based processes, respectively. Hence, recovery of PAN and MAN could be very economically attractive. Recovery of both materials would essentially solve the most troublesome emission problems.

TABLE 3. OVERALL MATERIAL BALANCE FOR A 5.9 x 10^4 METRIC TONS/YR o-XYLENE BASED PHTHALIC ANHYDRIDE PLANT[1,a]

Stream number:[b]	1	8	18	20
Description:	o-Xylene	Switch-condenser off-gas	Rectifying column bottom product	Product PAN
Temperature, °C:	27	66		149
Gage pressure, kPa:[c]	0	26		20
Component	Flow rates, kg/hr[d]			
Sulfur dioxide		34.1		
Carbon monoxide		1,095.9		
Carbon dioxide		3,784.6		
Nitrogen		140,862.8		
Oxygen		32,819.1		
Phthalic anhydride		167.3	7.3	7,272.7
Maleic anhydride		315.4		14.6
Benzoic acid		20.4		
o-Xylene	7,098.6			
m- and p-Xylene	334.6			
Misc. organics			34.1	
Water		6,339.1		
TOTAL	7,433.2	185,438.7	41.4	7,287.3

[a]Original data developed by Houdry.

[b]Stream numbers are the same as those shown in Figure 2.

[c]Blanks indicate data not available.

[d]Blanks indicate no mass flow of component.

TABLE 4. OVERALL MATERIAL BALANCE FOR A 5.9 x 10^4 METRIC TONS/YR NAPHTHALENE BASED PHTHALIC ANHYDRIDE PLANT[1,a]

Stream number:[b]	1	8	17	18
Description:	Naphthalene	Switch-condenser off-gas	Distillation column bottom product	Product PAN
Temperature, °C:	93	66		149
Pressure, kPa:[c]	0			0
Component	Flow rates, kg/hr[d]			
Naphthalene	7,497.3			
Phthalic anhydride		148.2	48.2	7,272.7
Maleic anhydride		50.9		14.6
Naphthoquinone		5.0	48.2	
Misc. organics	37.7		37.7	
Oxygen		12,208.2		
Nitrogen		68,177.3		
Carbon dioxide		7,030.4		
Carbon monoxide		366.4		
Water		2,290.9		
TOTAL	7,535.0	90,277.3	134.1	7,287.3

[a]Original data developed by Houdry.

[b]Stream numbers are the same as those shown in Figure 3.

[c]Blanks indicate data not available.

[d]Blanks indicates no mass flow of component.

TABLE 5. COMPARISON OF o-XYLENE AND NAPHTHALENE BASED PHTHALIC ANHYDRIDE PROCESSES (5.9 x 10^4 METRIC TONS/YR PLANTS)[a]

Parameter	o-Xylene process	Naphthalene process
Yield		
kg PAN/kg FEED	0.98[b]	0.97[c]
Moles PAN/moles FEED	0.70[b]	0.84[c]
Losses[d]		
Total carbon, kg/hr	1,778	2,198
Phthalic anhydride, kg/hr	167.3	148.2
Maleic anhydride, kg/hr	315.4	50.9
Carbon monoxide, kg/hr	1,095.9	366.4
Carbon dioxide, kg/hr	3,784.6	7,030.4
Benzoic acid, kg/hr	20.4	-
Naphthoquinone, kg/hr	-	5.0

[a]Derived from data in Tables 3 and 4.

[b]FEED = 95% o-xylene; balance of FEED is not converted to PAN.

[c]FEED is 99.0 to 99.7% naphthalene.

[d]Losses correspond to materials in switch-condenser off-gas.

Future PAN plants may be based on naphthalene feedstock due to tight supplies of petroleum derived o-xylene. Naphthalene will be readily available from future coal conversion plants. Tight supplies of o-xylene will not prevent the PAN producers using the BASF process from operating since they can operate on naphthalene.[1] The impact of this changeover in feedstock on emissions is not known.

4.3 WASTE GAS CHARACTERIZATION

In order to evaluate the different control systems on the same basis for the switch condenser off-gas (main process vent gas), a representative plant was defined for each of the two types of manufacturing processes described above. The waste gases from the main process of these two representative plants were then characterized for the subsequent technical and economic evaluations.

A representative o-xylene based phthalic anhydride plant is defined to be one using the BASF process and having a production capacity of 5.9 x 10^4 metric tons/yr.[1] The BASF process is

specified because it is the newest and most widely used technology, accounting for 79% of the o-xylene based production in 1974.[2,3] The standard size BASF plant has two production trains of two reactors each, and a capacity of 5.9×10^4 metric tons/yr. The flow rate and composition of the switch condenser off-gas are shown in Table 6.

TABLE 6. SWITCH CONDENSER OFF-GAS FROM A REPRESENTATIVE o-XYLENE BASED PLANT

Component	Flow rate, kg/hr	Volume, %	Partial pressure, mm Hg
SO_2	34.1	0.01	0.08
CO	1,095.9	0.60	4.9
CO_2	3,784.6	1.32	10.7
N_2	140,862.8	76.94	624.8
O_2	32,819.1	15.69	127.4
PAN	167.3	0.0173	0.141
MAN	315.4	0.0491	0.399
Benzoic acid	20.4	0.003	0.02
Water	6,339.1	5.39	43.8
TOTAL	185,438.7	100.00	812.0

Volumetric flow rate = 2,665 m^3/min (94,150 scfm)

A representative naphthalene based phthalic anhydride plant is defined to be one using the Badger-Sherwin-Williams process and having a production capacity of 5.9×10^4 metric tons/yr.[1] The Badger-Sherwin-Williams process is the dominant fluid-bed technology and accounted for 73% of the naphthalene based production in 1974.[2,3] There is no standard size for the Badger-Sherwin-Williams fluid-bed reactors. Hence, the representative plant capacity was chosen to be the same as that for the o-xylene based plant. The flow rate and composition of the switch condenser off-gas are presented in Table 7.[1]

All of the maleic anhydride and most of the phthalic anhydride contained in the waste gas are in vapor phase. There is a short-term presence of PAN dust in the stream due to the opening and closing of the valves used to isolate the switch condensers. The waste gases from both of the representative plants can be characterized as large-volume, low-temperature, low-pressure, low-heat-value gases containing air, CO, CO_2, and hydrocarbons.

TABLE 7. SWITCH CONDENSER OFF-GAS FROM A REPRESENTATIVE NAPHTHALENE BASED PLANT

Component	Flow rate, kg/hr	Volume, %	Partial pressure, mm Hg
PAN	148.2	0.0321	0.261
MAN	50.9	0.0167	0.136
Naphthoquinone	5.0	0.001	0.01
O_2	12,208.2	12.24	99.4
N_2	68,177.3	78.09	634.1
CO_2	7,030.4	5.12	41.6
CO	366.4	0.42	3.4
H_2O	2,290.9	4.08	33.1
TOTAL	90,277.3	100.00	812.0

Volumetric flow rate = 1,270 m^3/min (44,880 scfm)

4.4 PRESENT CONTROL PRACTICES

There are four types of control systems currently being used by the phthalic anhydride industry for controlling the switch condenser off-gases:

- Direct thermal incinerator
- Wet scrubber and incineration of the scrubber waste liquor
- Wet scrubber and recovery of MAN from the scrubber waste liquor
- Wet scrubber and biological waste treatment facility

The type of control system and its control efficiency for each of the ten plants in the United States are given in Table 8.[10-16] Among these ten plants, one does not have devices for control of the off-gas.[10] Five plants utilize the method of direct thermal incineration, with total organics removal of 80% to 96.5%.[11-14] Two plants use wet scrubbers for the off-gas scrubbing and incinerators for the scrubber purge liquor, with a reported overall organics removal of 96%.[12] One of these two plants has recently installed a maleic anhydride recovery process for treating part of the scrubber purge liquor. The ninth plant employs a system containing a wet scrubber and a biological waste treatment facility. The tenth plant uses a wet scrubber only. Available data for the last two plants were not sufficient to develop an estimate of the control efficiency.

---

[10] Personal communication with L. B. Evans, U.S. Environmental Protection Agency, Research Triangle Park, North Carolina (data originally supplied by Stepan Chemical Company), 12 June 1975.

[11] Personal communication with A. B. Netzley, Air Pollution Control District, County of Los Angeles, 28 March 1975.

[12] Schwartz, W. A., et al. Engineering and Cost Study of Air Pollution Control for the Petrochemical Industry, Volume 7: Phthalic Anhydride Manufacture from Ortho-Xylene. EPA 450/3-73-006g, U.S. Environmental Protection Agency, Research Triangle Park, North Carolina, 1975. 108 pp.

[13] Personal communication with H. M. Lacy, Monsanto Company, Texas City, Texas, 7 April 1975.

[14] Personal communication with T. Brennan, Bay Area Air Pollution Control District, San Francisco, California, 23 June 1976.

[15] Personal communication with L. B. Evans, U.S. Environmental Protection AGency, Research Triangle Park, North Carolina (data originally supplied by Koppers Company), 12 June 1975.

[16] Personal communication with M. A. Pierle, Monsanto Company, St. Louis, Missouri, April 1976.

TABLE 8. CONTROL SYSTEMS PRESENTLY USED BY THE PAN INDUSTRY IN THE U.S.

Plant no.	Company	Location	Nominal capacity, 10^3 metric ton/yr	Raw material	Process	Type of control system	Control efficiency
1	Allied Chemical	El Segundo, Calif.	15.9	o-Xylene	Chemiebau (von Heydon)	Thermal incinerator	89% total organics[11]
2	BASF Wyandotte	S. Kearny, N.J.	59.0	o-Xylene	BASF	Wet scrubber for the waste gas and incinerator for the scrubber purge liquor.	96% total organics[12]
3	Exxon Corp.	Baton Rouge, La.	40.8	o-Xylene	BASF	Thermal incinerator	96.5% total organics[13]
4	Koppers Co.	Cicero, Ill.	79.4	o-Xylene	BASF	Wet scrubber for the waste gas and either incinerator or MA recovery process for the scrubber purge liquor.	96.5% total organics for the system using incinerator.[12] Unknown for the system with MAN recovery.
5	Monsanto Co.	Texas City, Texas	59.0	o-Xylene	BASF	Thermal incinerator	96.5% total organics[13]
6	Std. Oil Calif.	Richmond, Calif.	22.7	o-Xylene	Lurgi (von Heydon)	Thermal incinerator	23% reactive hydrocarbons[14]
7	Stepan Chemical Co.	Millsdale, Ill.	22.7	o-Xylene	Chemiebau (von Heydon)	None[10]	NA[a]
8	Koppers Co.	Bridgeville, Pa.	40.8	Desulfurized naphthalene	OWN (fluid bed)	Wet scrubber[15]	--[b]
9	Monsanto Co.	Bridgeport, N.J.	40.8	Petroleum naphthalene	Badger-Sherwin-Williams	Wet scrubber and biological treatment facility.[16]	NA
10	U.S. Steel	Neville Island, Pa.	68.0	Desulfurized naphthalene	Badger-Sherwin-Williams	Thermal incinerator	80% total organics[12]

[a] Not applicable.

[b] Insufficient data for accurate calculation.

SECTION 5

ALTERNATIVE CONTROL METHODS AND THEIR TECHNICAL EVALUATION

The alternative methods considered for controlling PAN and MAN emissions from the switch condenser off-gas include the following:

- Direct thermal incinceration with heat recovery
- Direct catalytic incineration with feed gas preheating
- Wet scrubbing with waste disposal
- Carbon adsorption and incineration
- Condensation and filtration
- Process modification

When direct thermal incineration or direct catalytic incineration is applied, the waste gas is directed to the stack after waste heat recovery without further treatment. In the case of wet scrubbing, the purge liquor presents a waste disposal problem. The treatment alternatives for this liquid stream include incineration, MAN recovery, and biodegradation in an activated sludge process. The carbon adsorption/incineration method consists of carbon adsorption and subsequent incineration of the concentrated organic stream. When condensation/filtration is applied, PAN and MAN vapors are condensed into solid particles by cooling and the water soluble particles are subsequently removed by a fiber bed. The process modification includes the use of a modified PAN manufacturing process (the CHAUNY process) developed by Rhone-Poulenc Industries in France.

The individual processes involved in the above-mentioned alternative control methods are further described in the following subsections. Also included is the technical evaluation of each control method in relation to (a) the ability to reduce MAN and PAN emissions by 99%; (b) the important process and operating parameters that will affect emissions from the control process; (c) the changes in process or operating parameters that will affect 99% removal efficiency; (d) the applicability of the control method to both o-xylene and naphthalene based PAN processes; (e) the unique operating or maintenance requirement of the processes involved; and (f) technical advantages and disadvantages.

5.1 THERMAL INCINERATOR/HEAT RECOVERY

5.1.1 System Description

Thermal incinerators are used to control the release of hydrocarbon fumes from industrial processes. Inside the incinerator the hydrocarbon pollutants are oxidized to form carbon dioxide and water in the presence of oxygen at a temperature above their ignition temperatures. The incinerator consists of a refractory-lined combustion chamber with a raw gas burner fired at one end to supply heat. Since a large amount of fuel is needed to heat the total volume of waste gas, and because the price of fuel is high, some form of heat recovery is practiced to make use of the heat energy contained in the flue gases discharged from the incinerator.

Schematic diagrams of two types of incinerator/heat recovery systems which are applicable to phthalic anhydride plants are shown in Figures 4 and 5. The heat recovery devices and the problems associated with them are discussed in Section 5.1.3.

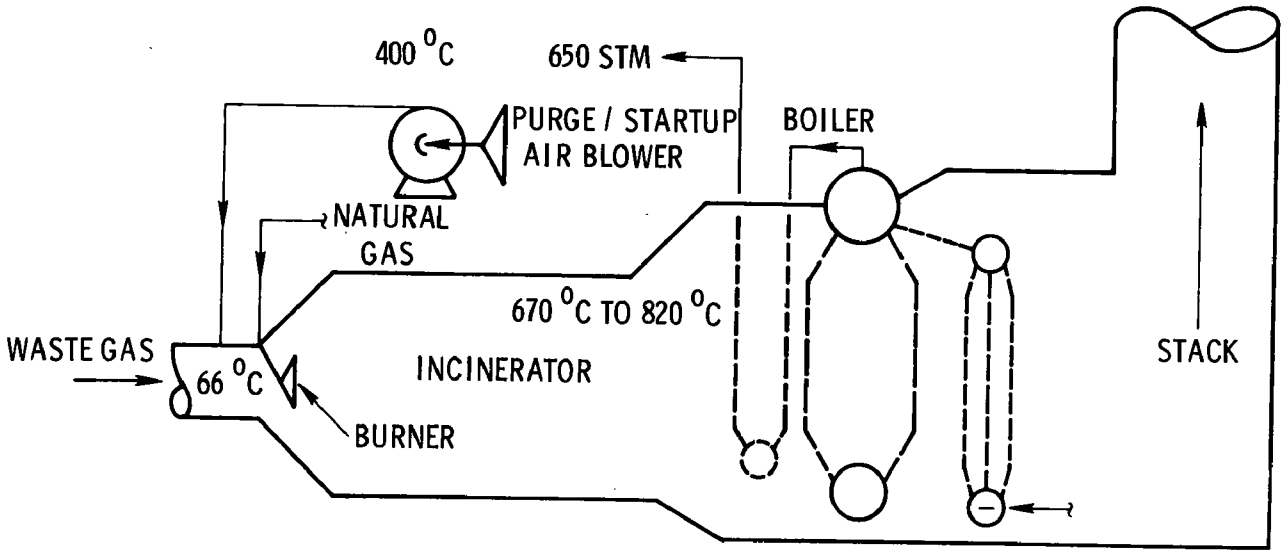

Figure 4. Thermal incinerator with waste heat boiler.

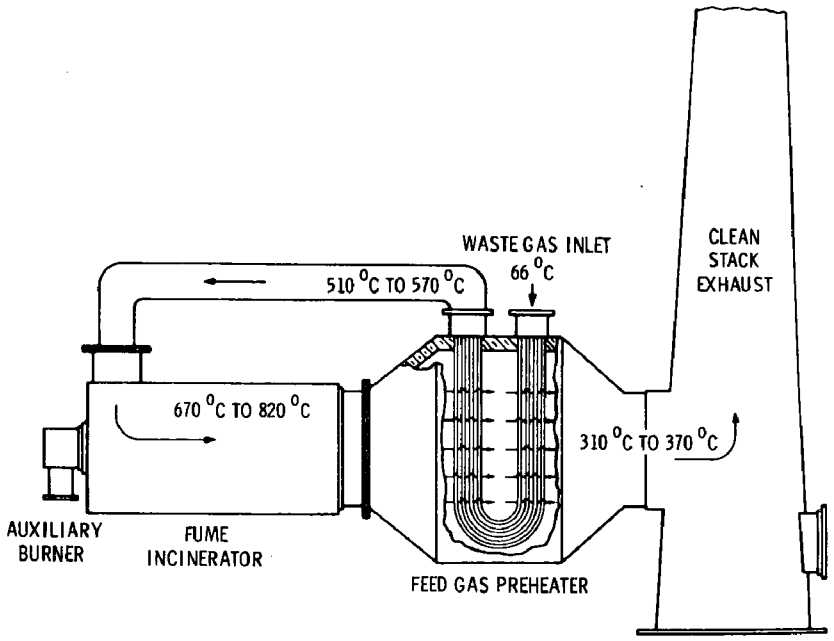

Figure 5. Thermal incinerator with feed gas preheater.[17]

Figure 6 shows the steps which must occur to provide the three Ts (temperature, turbulence, and time) for achieving satisfactory destruction of pollutants in a dilute stream. First, the supplemental fuel is burned by utilizing part of the oxygen contained in the dilute fume stream to produce high temperature combustion products (>1200°C). At the same time, the rest of the cold fume bypasses the flame and is mixed with the combustion products in the second step. The mixing gives a nearly uniform temperature to all fumes flowing through the incinerator. This is done as rapidly as possible without causing flame quenching so that sufficient residence time can be provided at the required temperature in the third step for the oxidation of pollutants contained in the bypassed fume. Residence time is governed by the size of the combustion chamber. Mixing (turbulence) is caused by baffles or by tangential entry of either the dilute fume or the combustion products from the incinerator burner.

[17]Ross, R. D. Pollution Abatement: Incineration of Solvent-Air Mixtures. Chemical Engineering Progress, 68(8):59-64, 1972.

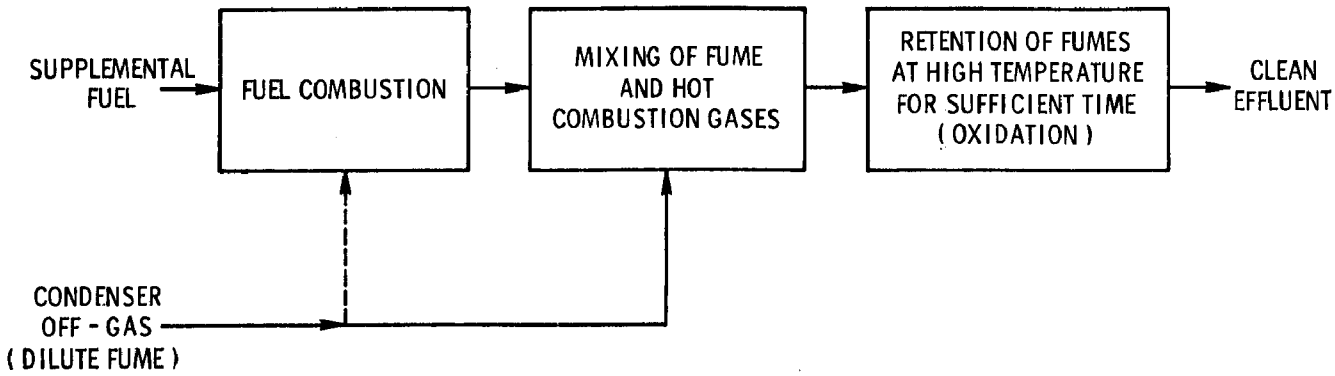

Figure 6. Steps required for successful incineration of dilute fumes.

5.1.2 Technical Evaluation for the Incinerator

5.1.2.1 Thermodynamic Considerations--
As can be seen from Table 8, the existing incinerators used by the phthalic anhydride industry for control of condenser off-gas have control efficiencies on organics (including PAN, MAN, benzoic acid and naphthoquinone) in the range of 80% to 96.5%. A 99% reduction of PAN and MAN was not reported. An attempt was therefore made to determine whether there is a thermodynamic limitation on the combustion efficiency of PAN and MAN for reaching the 99% reduction.

The oxidation of these two compounds to form the final combustion products of H_2O and CO_2 can be expressed as follows:

$$\underset{\text{PAN}}{C_8H_4O_3} + 7\tfrac{1}{2}O_2 \rightarrow 8CO_2 + 2H_2O$$

$$\underset{\text{MAN}}{C_4H_2O_3} + 3O_2 \rightarrow 4CO_2 + H_2O$$

The first step in determining the equilibrium conversion efficiency is to calculate the equilibrium constants for the above reactions according to the following equation:

$$K_p = e^{-\Delta F/RT} \qquad (1)$$

where $\Delta F = \sum_i \nu_i F_i$ products $- \sum_i \nu_i F_i$ reactants = change in free energy due to reaction
F_i = free energy of formation for component i
ν_i = stoichiometric coefficient of component i
K_p = equilibrium constant at constant pressure

To obtain the equilibrium constants as functions of temperature, the free energies of formation for H_2O, CO_2, PAN, and MAN in the temperature range of interest are needed (O_2 has a free energy of formation of zero).

The free energy data for CO_2 and H_2O are available for a wide range of temperatures. Unfortunately, similar data for PAN and MAN at incineration temperatures are not available to MRC. However, the available data for some hydrocarbons and oxygenated hydrocarbons indicate that the free energy of formation at temperatures around 1,000K ranges from -20 to 40 kcal/mole.[18] The data for H_2O and CO_2 at the same temperature are -46.0 and 94.6 kcal/mole, respectively.[18] For a worst case estimate, assume that the free energy of formation for PAN and MAN is -20 kcal/mole. The resulting K_p's, calculated from Equation 1 for both PAN and MAN, are infinity.

The above calculation shows that there is no theoretical limitation on the conversion efficiencies for PAN and MAN in the incinerator. One-hundred percent control efficiency for organic removal can be achieved under equilibrium conditions. The relatively low control efficiencies in the existing incinerators are therefore due to kinetic limitations.

5.1.2.2 Kinetic Considerations--
Oxidation involves bimolecular reactions between the combustible compound and the oxidizer. The rate at which oxidation proceeds, r, can be approximately represented by the overall expression:

$$r = k(C_{O_2})(C_{combustible}) \qquad (2)$$

where k is the rate constant and C is the concentration. The rate constant, k, is an exponential function of temperature in the following form:

$$k = A\ e^{-E/RT} \qquad (3)$$

with the activation energy, E, typically in the range of 10 to 60 kcal/mole for this overall rate constant.[19] For an activation energy of 30 kcal/mole, the reaction rate will double for an increase of temperature from 700°C to 750°C.

---

[18] JANAF Thermochemical Tables, Second Edition. NSRDS-NBS 37, U.S. Department of Commerce, National Bureau of Standards, Washington, D. C., June 1971. 1,141 pp.

[19] Rolke, R. W., et al. Afterburner Systems Study. EPA R2-72-062, U.S. Environmental Protection Agency, Research Triangle Park, North Carolina, 1972. 336 pp.

In the condenser off-gas, the concentrations of combustible materials (including PAN, MAN, benzoic acid, naphthoquinone, and CO) are very small as compared to that of O_2. Therefore, the concentration of O_2 in the post-flame area in the incinerator is almost constant despite the consumption due to the oxidation of pollutants. Equation 2 can thus be rewritten as:

$$r = C_{AO}\frac{dX_A}{dt} = k' \; C_{AO} \; (1 - X_A) \qquad (4)$$

where C_{AO} = the inlet concentration of pollutant A
X_A = the fractional conversion

Integration of Equation 4 over time, t, gives:

$$-\ln (1 - X_A) = k't = A'e^{-E/RT} \; t \qquad (5)$$

This equation shows the fractional conversion as a function of residence time, t, and temperature, T. It should be noted that in deriving Equation 5, it is assumed that perfect mixing (uniform temperature) in the combustion chamber is attained. Figure 7 schematically indicates the general effects of temperature and residence time on the fractional conversion of combustibles in an incinerator.

In actual incineration operation, the mixing time for the gas mixture is about the same order as, and sometimes even greater than, the reaction time, depending on the design. To estimate the temperature increase for obtaining the desired control efficiency, the activation energies for complete oxidation of PAN and MAN are needed. Also the effect of mixing on the overall performance of a particular incinerator has to be quantified. Unfortunately, none of the above information is available. Therefore the following approach was used to estimate the temperature increase for achieving 99% removal of organics. In this approach, the organic components in the off-gas were considered as a single substance. The mixing effect and oxidation reaction were then combined to obtain an "apparent" activation energy for later use in estimating the temperature effect of the conversion efficiency.

This approach utilizes the information obtained from three sources. An industry survey indicates that an incinerator (at plant 5 shown in Table 8), operating at 700°C, attains a conversion efficiency of 95%.[20] Two other information sources show that the same unit was originally designed to operate at 760°C at a different gas

[20]Personal communication with L. B. Evans, U.S. Environmental Protection Agency, Research Triangle Park, North Carolina (data originally supplied by Monsanto Company), 12 June 1975.

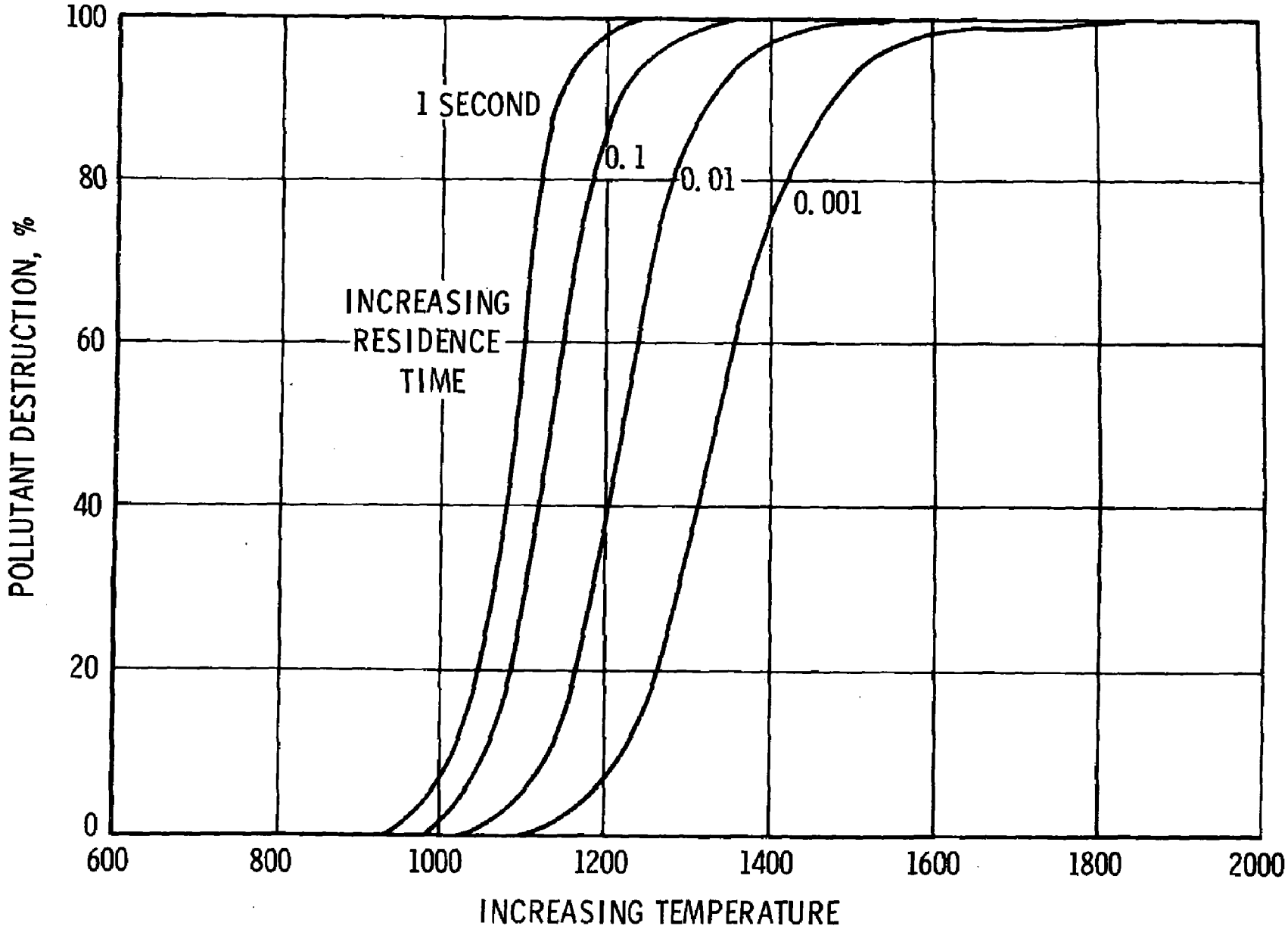

Figure 7. Coupled effects of temperature and time on rate of pollutant oxidation.

flow rate for a 96.5% conversion efficiency and that it is the best unit presently available.

Based on the above information on different conversion efficiencies at different temperatures, and considering the differences in residence time and in mixing efficiencies of the incinerator due to a change in flow rate, it was estimated (by using Equation 5) that the "apparent" activation energy for the oxidation of the mixture of organic material is 6 kcal/mole. With this apparent activation energy, the temperature at which 99% conversion can be obtained was calculated to be 860°C.

An increase in operating temperature from 700°C to 860°C will require more fuel, thus passing a larger volume of gas through the incinerator and therefore decreasing the residence time. However, it is determined that this decrease is less than 1% and is hence negligible.

The same efficiency improvement can also be obtained by increasing the mixed gas residence time without changing the operating temperature. This increase of residence time can be calculated by using Equation 5 and the conversion efficiency at 700°C (95%). From this calculation, it was estimated that a 55% extension in the length of the mixed gas combustion chamber will give enough residence time for 99% destruction of organic substances.

From past experiences in the incineration of other organic pollutants, it was reported that the destruction of most hydrocarbons occurs very rapidly at temperatures in excess of 590°C to 650°C.[19] Possible exceptions are methane, cellosolve, and benzene derivatives, like toluene, which are stable molecules and require a higher temperature (∿760°C) for complete oxidation to occur in a few tenths of a second.[19] Since both PAN and MAN are oxygenated hydrocarbons and are intermediates in the oxidation of hydrocarbons, it is expected that the destruction of these two compounds would not be more difficult than that of toluene.

Experimental data on the conversion efficiency of toluene and two other hydrocarbons are shown in Figure 8.[19] The curves show that the rate of hydrocarbon disappearance was first order with respect to hydrocarbon concentrations and that with mixed gas residence time of 0.21 sec a 99.9% destruction of toluene is possible at 766°C.

It is indicated in a systems study that temperatures of 760°C to 816°C are sufficient to obtain nearly complete conversion of most substances in 0.1 sec to 0.3 sec.[19] However, incinerators are usually designed to have total residence times of 0.3 to 1 sec. Even with so much excessive residence time, some of the units still have poor conversion efficiency because time is required for the mixing step and many designs fail to complete the mixing in the

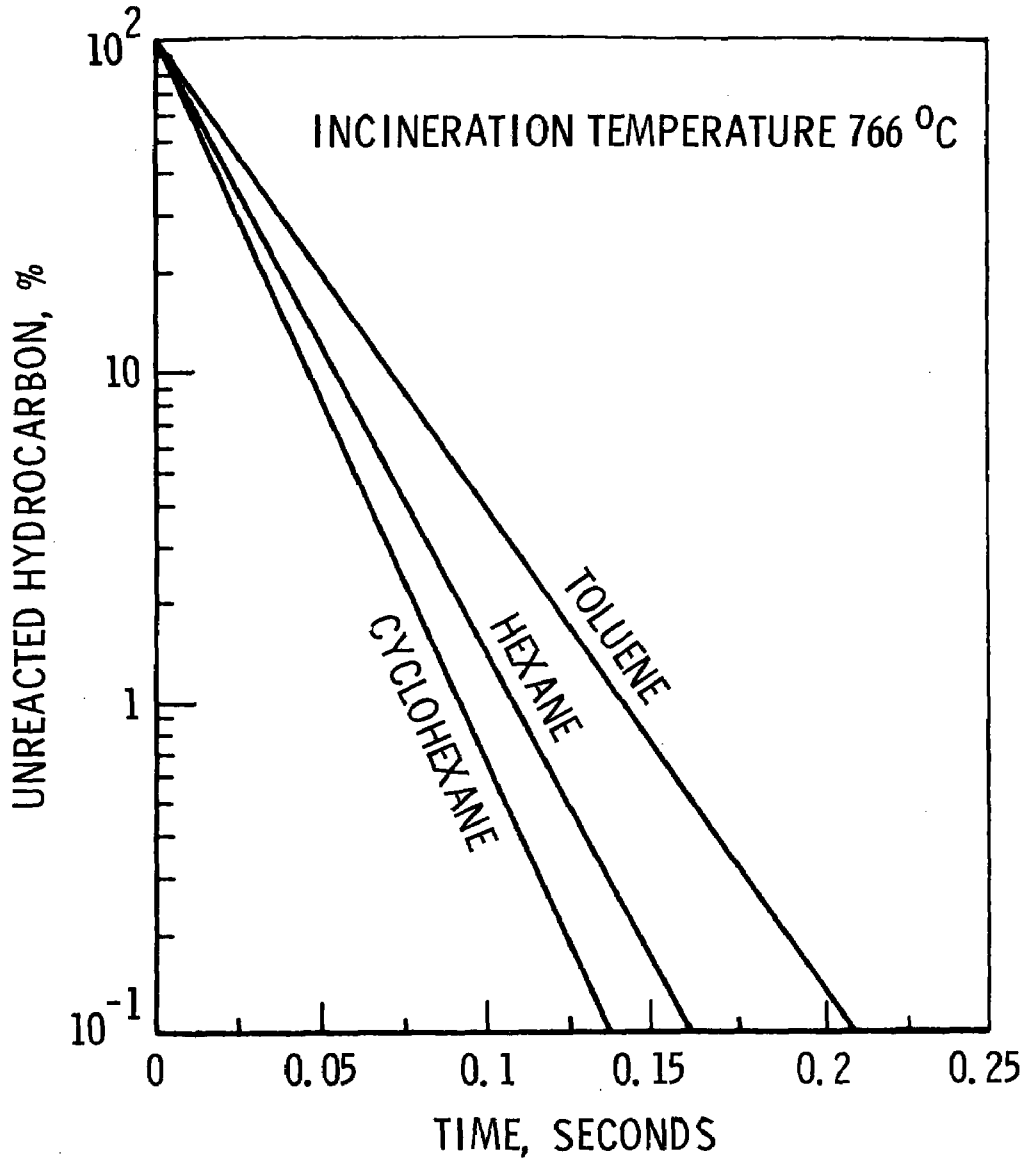

Figure 8. Hydrocarbon oxidation rates in absence of flame.[19]

distance (time) available. The greatest variation among different incinerator (afterburner) designs is in how well they achieve the goal of raising all of the fume to the required temperature for the required time.[19] Most cases of poor performance are due to nonuniform temperatures and flows which allow some of the combustible pollutants to escape without treatment.

5.1.2.3 NO_x Formation and CO Reduction--
There are no nitrogen-containing compounds in the condenser off-gas. The formation of NO_x in the incinerator results from the fixation of nitrogen and oxygen which are present in the waste gas. Substantially all of the NO_x is formed in the high temperature region (>1150°C) of the burner flame. At the temperature of the main combustion chamber (700°C to 900°C), the overall rate of reaction of nitrogen with oxygen is too slow for significant formation of NO_x.[19]

When the combustion chamber temperature is raised to achieve a better control efficiency, the increased supplemental fuel injection into the burner will result in a larger flame size and thus a longer residence time in the high temperature region to form NO_x. It has been estimated that an increase of the incinerator operating temperature from 650°C to 815°C will result in a gain of NO_x emissions from 18 ppm to 22 ppm.[19] Based on this information, a 160°C temperature rise as recommended in Section 5.1.2.2 for achieving 99% removal efficiency will increase the NO_x emissions by 20%. Since a relatively low source severity (S = 0.14) has been reported for NO_x emissions from the incinerator, this increase is considered as unimportant.[1]

On the other hand, incineration at the temperatures considered can reduce the CO contained in the waste gas by greater than 99.9%.[14] This is an advantage, especially for cases where CO emissions require control due to state or local regulations.

5.1.2.4 Conclusion--
From the technical evaluation of the incinerator, it is concluded that 99% removal efficiency can be obtained by operating the incinerator at a mixed gas temperature of 860°C (as compared to 95% conversion at 700°C). The desired efficiency can also be achieved by increasing the length of the main combustion chamber in either of the existing incinerators by 55%. If high conversion cannot be obtained by raising the operating temperature (which can be accomplished by increasing fuel consumption), the problem may be caused by poor mixing efficiency of the incinerator. In this case, an investigation is needed to define changes in design of the burning-mixing section for obtaining near-uniform temperature distribution of the mixture.

5.1.3 Heat Recovery

When an incinerator is used to control PAN, MAN, and other combustible materials from the condenser off-gas, large amounts of fuel are needed to heat the large volume of waste gas to the required temperature. Both the high cost and inadequate supply of fuel become problems in operating the incinerator. As a result, some form of heat recovery becomes necessary.

Two types of heat recovery equipment are considered in this study. One is the waste heat boiler and the other is the feed-effluent heat exchanger shown in Figures 4 and 5, respectively.

The thermal incinerator/waste heat boiler system has been used in one plant (plant 5 as shown in Table 8) for several years, and a similar unit was recently installed in another plant (plant 3). Satisfactory operations have been reported. In this system, the feed gas to the incinerator is not preheated. This permits maximum steam generation but substantially increases the fuel requirement. Since most of the required heat is supplied by supplemental fuel, it is relatively easy to sustain combustion. The major drawback of the system is that steam consumers must be found.

In the thermal incinerator/feed-effluent heat exchanger system, the condenser off-gas is preheated by the effluent gas from the incinerator; this reduces the fuel requirement for heating the feed gas to the incineration temperature. This system had been installed in one plant which, as originally designed, incorporated an extensive amount of feed-effluent heat exchange (plant 3). However, due to safety and other operational problems, this system was recently replaced by the incinerator/waste heat boiler system described above. Similar problems have also been encountered in the incineration system in plant 6.

The safety problem comes from the development of hot spots which exceed the autoignition temperature of PAN (approximately 455°C).[21] Due to the opening and closing of the valves used to isolate the switch condensers, short-term high concentrations of PAN dust may be present in the condenser off-gas. As PAN dust accumulates in the heat exchanger, it melts, enters the tubes, and is vaporized. If the tube has a hot spot which is above the autoignition temperature with sufficient PAN present, ignition will occur. Therefore, ignitions are probably common in this type of system, but due to the small quantity of combustible material and relatively high velocity, ignition is a transient condition. However, when an ignition and a sufficient puff of PAN dust occur simultaneously, an explosion occurs.[21] If the operating temperature of the

---

[21] Moores, C. W. Control PA Emissions. Hydrocarbon Processing, 54(10):100-103, 1975.

incinerator is raised to achieve a better control efficiency (99%), the possibility of explosion is even greater.

Another problem associated with this system is that preheating of the incinerator feed stream will reduce the amount of burner flame present and thus reduce the radicals generated by the flame for effective destruction of combustible pollutants. Because of the safety problem and the lower conversion efficiency mentioned above, the feed-effluent heat exchanger is not recommended for use in connection with an incinerator. Therefore, further economic evaluation was not made for this system.

5.2 CATALYTIC INCINERATOR/FEED GAS PREHEATING

5.2.1 System Description

A catalytic incinerator is an alternative to a thermal incinerator as a means of oxidizing gaseous hydrocarbons (including oxygenated hydrocarbons) to carbon dioxide and water. Contact of a waste stream with a catalyst bed allows the oxidation reaction to occur rapidly at a lower temperature than that required in a thermal incinerator. This lower temperature will result in savings in fuel consumption.

Five steps are involved in the solid-catalyzed vapor-phase reaction:

- Diffusion of the reactants through the stagnant fluid around the surface of the catalyst
- Adsorption of the reactants on the catalyst surface
- Reaction of the adsorbed reactants to form products
- Desorption of the products from the catalytic surface
- Diffusion of the products through the pores and surface film to the bulk vapor phase outside the catalyst.

The various noble metals such as platinum, palladium, rhodium, etc., in varying concentrations cause different reaction rates for each specific hydrocarbon. However, in air pollution control, it is not practical to undertake a research program to develop a specific catalyst for each problem. Therefore, commercial catalyst manufacturers have attempted to make available a universal catalyst which is effective in oxidizing the entire range of organic materials over an extended period of exposure time with minimum maintenance and replacement.

A catalytic incineration system, developed by a European phthalic anhydride manufacturer (Rhone-Poulenc Industries) for use in connection with its new manufacturing process (CHAUNY process), is shown in Figure 9. This system incorporates a feed gas preheating device and is said to be self-sufficient in energy balance.

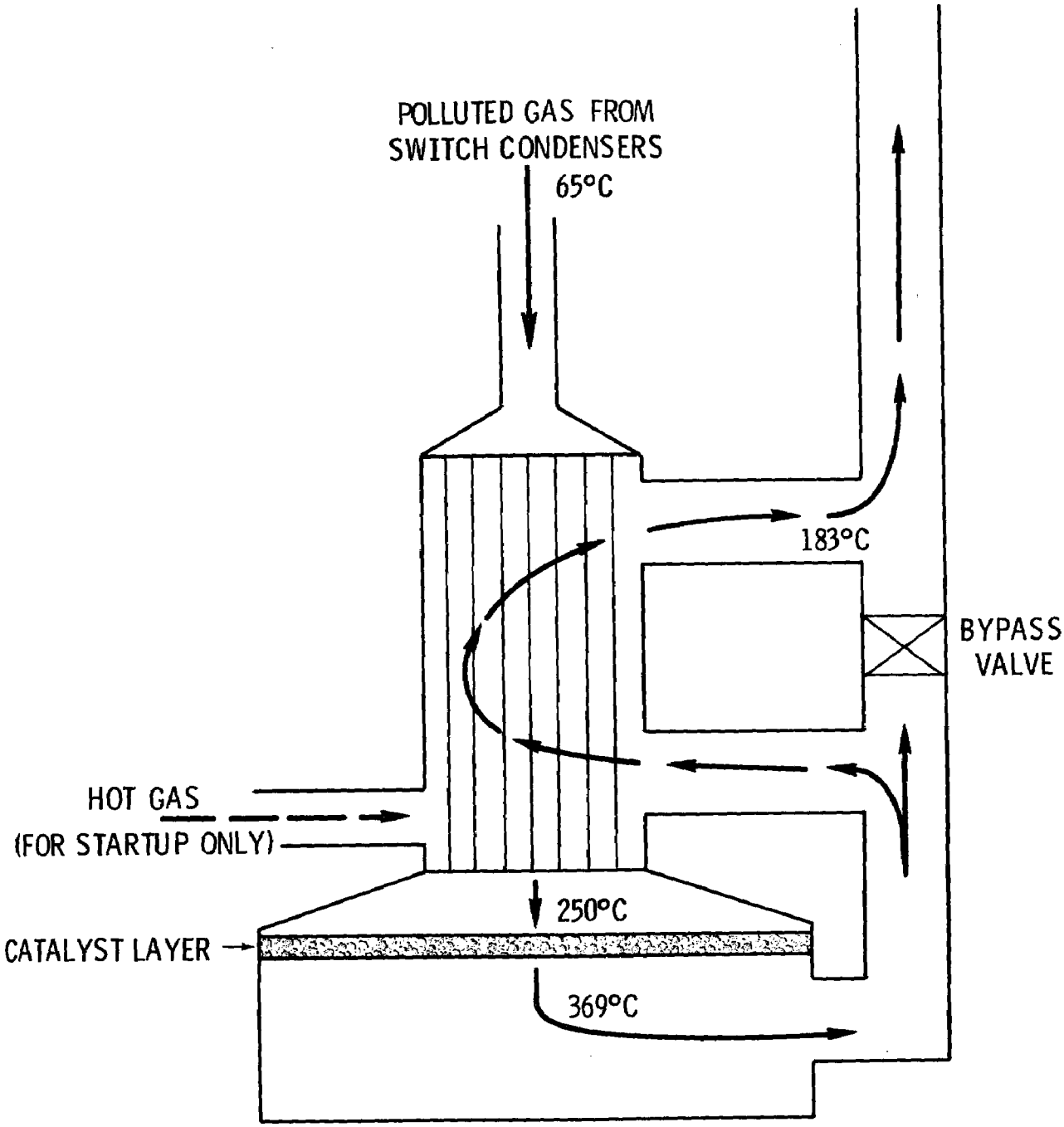

Figure 9. Rhone-Poulenc catalytic afterburner for phthalic anhydride off-gases.

The calories necessary to raise the gas temperature to the correct reaction level are provided by means of the gas-gas heat exchanger and by the exothermic oxidation itself. The catalyst was developed specifically to treat the off-gas from the new manufacturing process.

Although gas preheating is usually considered as a means for fuel savings, it becomes a necessity when treating the phthalic anhydride condenser off-gas. This is due to the occasional presence of the PAN dust which, without preheating to vaporize, will possibly cause burning or explosion in the catalytic incinerator. This becomes possible when hot spots are developed in the catalyst bed which have a temperature in excess of the autoignition temperature of PAN (455°C).

5.2.2 Technical Evaluation for the Incinerator

Catalytic incinerators were previously used in some naphthalene-based phthalic anhydride plants which are no longer in operation. Experience with these units was not satisfactory. Conversion efficiencies as low as 40% to 60% were reported.[22] One other problem was associated with this type of unit: moderate catalyst life with possible danger of catalyst fouling and poisoning. Possible polymerization of PAN and MAN on the catalyst surface can produce a polymer coating that covers the active sites of the catalyst.

Past experience in the use of catalytic units for other sources also indicates that while conversions up to 90% to 95% can be attained with reasonable catalyst volumes, the catalyst volume required for very high conversion (e.g., >98%) generally makes these units uneconomical, or the unit must be operated at temperatures close to that required for a thermal incinerator.[19]

As a result of this technical evaluation, catalytic incineration utilizing commercial catalysts is not recommended for use in treating the off-gas from conventional phthalic anhydride manufacturing processes. The use of the catalytic incineration unit developed by Rhone-Poulenc Industries (shown in Figure 9) in connection with the new and modified manufacturing process (CHAUNY process) is discussed in Section 5.6.

---

[22]Fawcett, R. L. Air Pollution Potential of Phthalic Anhydride Manufacture. Journal of the Air Pollution Control Association, 20(7):461-465, 1970.

5.3 WET SCRUBBER/WASTE DISPOSAL

5.3.1 System Description

Scrubbers can be used to remove the vapor-phase pollutants contained in the waste gas by absorption and to remove the PAN dust which may also be present in the waste gas by collision. Because the scrubber can operate at a temperature lower than that of the waste gas, condensation of part of the PAN and MAN into particles will occur in the scrubber. This will further enhance the removal efficiency of PAN and MAN.

A schematic diagram for the wet scrubber system is presented in Figure 10. Note that waste disposal is included in the system. This is necessary because wet scrubbing produces a secondary pollution problem caused by the discharge of the purge liquor. If this liquid discharge is not properly handled, an air pollution problem is just traded for a water pollution problem.

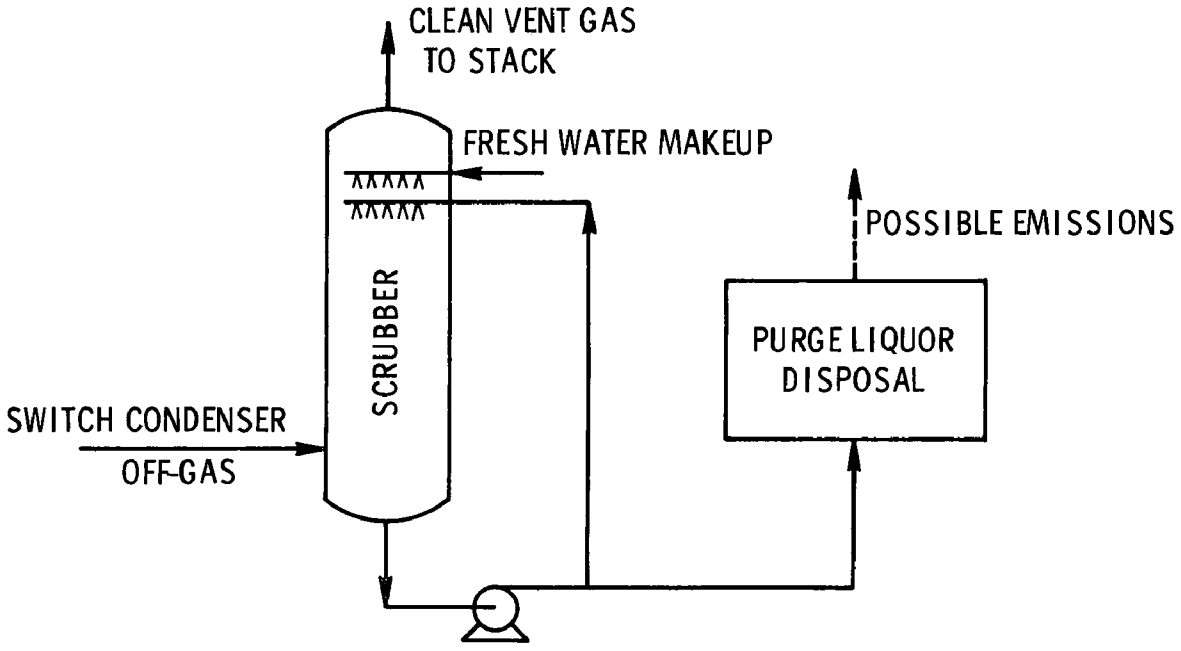

Figure 10. Wet scrubber/waste disposal system.

Phthalic and maleic anhydrides are hydrolyzed to the corresponding acids upon absorption into the scrubbing liquor. To concentrate the purge liquor for easier disposal (by minimizing the volume of the effluent stream), a certain degree of scrubbing liquor recycling is necessary. The means of purge liquor disposal considered in this study included incineration, MAN recovery, and biodegradation. These are described in the subsections following the technical evaluation of the wet scrubber.

A new wet scrubber design for treating the switch condenser off-gas is illustrated in Figure 11.[23] The unit consists of two stages, each of which contains a conventional fluid-bed packing on a supporting grid. The two stages are separated by a cone-shaped deflector plate and collection tray. The unit is designed to operate between 35°C and 40°C with an organic removal efficiency of 98% to 99%. This high efficiency is possible because most of the organics are solids at the scrubber operation conditions.

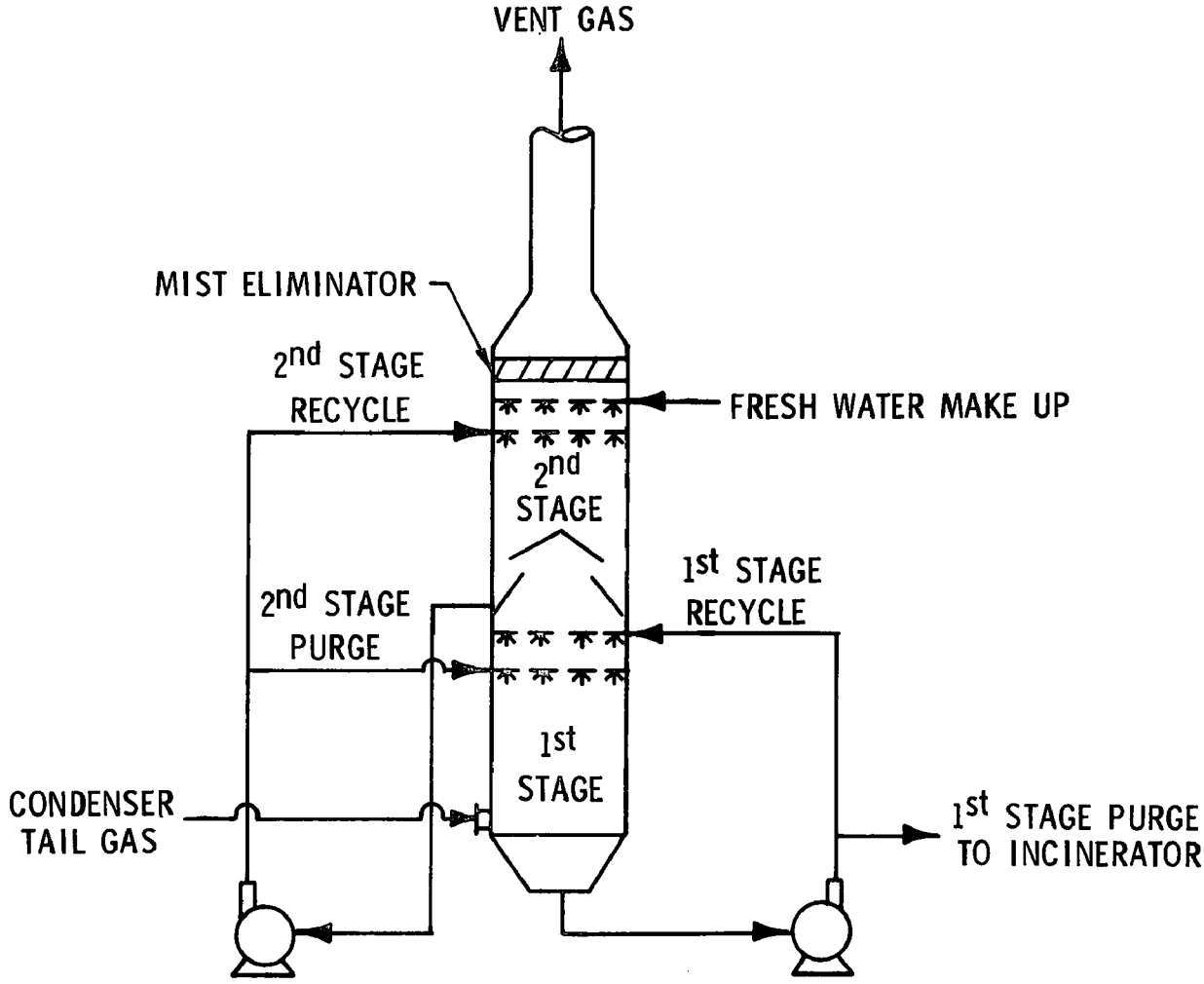

Figure 11. Schematic diagram of scrubber for phthalic anhydride plant.[23]

[23]Ferrari, D. C., and C. G. Bertram. Method and Apparatus for Removal of Organic from Chemical Waste Gases. U.S. Patent 3,624,984 (to the Badger Company), December 7, 1971.

The condenser tail gas enters the first stage at approximately 66°C. The scrubbing liquor for this stage consists of the purge from the second stage and the first stage recycle stream. The liquor is a slurry, containing 10% to 12% by weight of organic solids. The concentration of organic compounds, both dissolved and in the form of slurry solids, ranges from 10% to 50% by weight, depending on the composition of the gas being treated. A portion of the recycle stream is continuously purged and sent to a waste disposal process.

In the second stage, the gas is scrubbed with a dilute solution (0.5% to 3% by weight) of organic pollutants (chiefly maleic acid). Fresh water is added to the second stage at a rate sufficient to replace the water removed from the scrubber in the two exit streams. The makeup water combines with the second stage recycle stream to form the second stage scrubbing liquor. The scrubbed gas stream passes through a mist eliminator and is then vented to the atmosphere at 38°C.

5.3.2 Technical Evaluation for the Scrubber

5.3.2.1 Theoretical Considerations--

In order to obtain an overall removal efficiency of 99% for PAN and MAN, the wet scrubber should be able to remove these pollutants with an efficiency greater than 99% because of possible emissions from the waste disposal area which should be accounted for as emissions from the control system.

In this particular case, the removal of PAN and MAN in the scrubber is achieved by two distinct mechanisms. The first is condensation into solid particles and subsequent removal of the particles by scrubbing. The second is absorption of the vapors by the scrubbing liquid. Because the dew points of PAN and MAN in the waste gas are below the corresponding melting points, these two pollutants will be condensed into solid particles upon cooling in the scrubber.

The waste gas (switch condenser off-gas) is hot (66°C) and not saturated with water. Evaporation of water in the scrubbing liquor provides a cooling effect. This, together with the addition of sufficient cooling (e.g., room temperature), fresh makeup water, can maintain a temperature around 38°C in the scrubber. To evaluate the theoretical removal efficiency of the scrubber, it was necessary to consider the equilibrium vapor pressure of both PAN and MAN over their solid particles and over their aqueous solutions.

The equilibrium vapor pressures of pure PAN and MAN as functions of temperature are shown in Figure 12. At 38°C, the vapor pressure of PAN is 0.0027 mm Hg. When this is compared with the partial pressure of PAN in the waste gases from the o-xylene based and from the naphthalene-based plants (0.141 mm Hg and

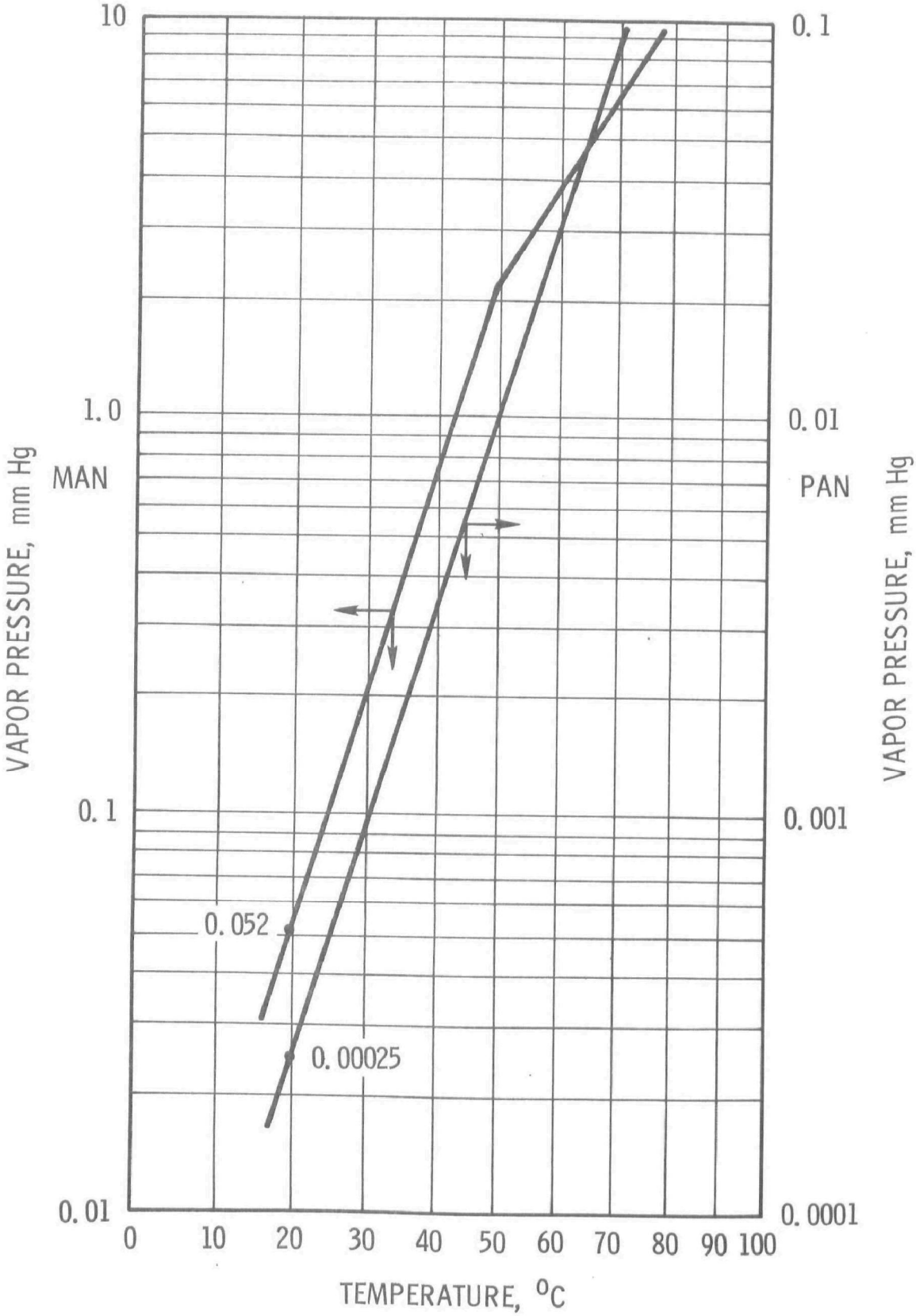

Figure 12. Vapor pressure vs. temperature.

0.261 mm Hg, respectively, as shown in Tables 6 and 7), one would expect that, given enough time, more than 98% of PAN will condense into solid particles at the scrubber temperature. From Figure 12 the equilibrium vapor pressure of MAN at the same temperature (38°C) is 0.6 mm Hg, which is higher than the partial pressures of MAN in both waste gas streams. Therefore, condensation of MAN will not occur in the scrubber.

From the above analysis, it is obvious that the removal of PAN will be achieved mainly by the first mechanism (particle collection) and that MAN removal will be achieved solely by the second mechanism (absorption). In reality, condensation and absorption of PAN will occur simultaneously. Therefore, the solubilities of both PAN and MAN in water are the next things to consider.

At the scrubbing temperature, MAN is soluble up to 40 weight percent of maleic acid.[23] PAN is only slightly soluble in water at this temperature (1 wt percent in terms of phthalic acid).[24] However, with increasing MAN concentration in the aqueous solution, the solubility of PAN can increase to 3 wt percent.[23] Therefore, in order to enhance the absorption of PAN, it would be desirable to have a scrubber design that provides high concentration of MAN in the first stage (when a multistage scrubber is used).

An example was given in the Badger patent[23] for the application of the two-stage wet scrubber for treating the switch condenser off-gas from a naphthalene based phthalic anhydride operation. From the material balance provided, the removal efficiency is 98.5% for MAN, and 98.4% for PAN.

Three PAN plants in the United States currently use wet scrubbers for treating the waste gases from the switch condensers (see Table 5). Plant 2 uses a proprietary cocurrent scrubber with a 19-m^3/min (5,000-gpm) recirculation of scrubbing liquid for cleaning about 3,400 m^3/min (120,000 scfm) of off-gas. Makeup water is sprayed into the scrubber system between the two demisters on the scrubber vent gas. In plant 4, a similar quantity of waste gas is processed in two parallel water scrubbers, each consisting of a venturi contactor (2.3-m^3/min water rate) followed by a packed column, countercurrent mist eliminator with a 7.6-m^3/min water recirculation rate. The scrubber purge liquors in both plants 2 and 4 are incinerated in liquid waste incinerators. At plant 4, a MAN recovery process is also used to treat part of the purge liquor.[23] Plant 8 utilizes two venturi scrubbers, a tangential cyclonic separator, and a multinozzle spray tower. Recirculation is practiced in the secondary scrubber (spray tower)

---

[24]Personal communication with R. A. Mount, Monsanto Company, St. Louis, Missouri, 3 June 1976.

at a 0.3-m^3/min water rate. The wastewaters from the scrubbers are collected for treatment (means unknown).

From the data obtained from a Russian article,[25] the Henry's law constant for MAN at the scrubber temperature was estimated to be 1.55×10^{-5}. This constant defines the vapor content of a particular component in a gas mixture which is in equilibrium with a dilute solution of the said component. This small value of Henry's law constant, together with the high solubility of MAN in water, indicates that even if the scrubbing liquid is recycled to provide concentrated purge liquor (and hence reduce the volume of the liquid effluent), the resulting MAN vapor in the gas phase is still very low.

Supposing the purge liquor has a concentration of 20% maleic acid, under equilibrium conditions, the concentration of MAN in the gas phase will be 6.99×10^{-5} volume percent. This concentration, when compared with the volume percent of MAN contained in the waste gases from o-xylene and naphthalene based plants, represents 99.9% and 99.2% reduction of MAN in the two gas streams, respectively. In the presence of phthalic acid and either benzoic acid or naphthoquinone in the solution, the vapor pressure of MAN will fall below the value mentioned, giving a higher theoretical removal efficiency in a one-stage fluid-bed scrubber.

5.3.2.2 Practical Considerations--
A maleic anhydride removal of "about 100%" from PAN plant waste gas in a one-tray foam scrubber with overflow baffle has been reported under pilot plant conditions.[25] In another test of water scrubber handling 835 m^3/min (29,500 scfm) switch condenser off-gas, it was also reported that the unit was capable of removing in excess of 99% of all organic acids.[22] However, in the latter case, the scrubber water discharge had a much lower acid concentration (1.7% to 2.5% total acidity as maleic acid).

In the two plants (2 and 4) where scrubbing liquid is recirculated for producing concentrated purge liquor for incineration or for MAN recovery, data on the scrubber feed composition are not available for an accurate calculation of the removal efficiency. Using the waste gas composition presented in Table 6 and the data on the emissions from scrubber vent gas, it was, however, possible to make a rough estimate. This estimate shows that the removal of PAN and MAN in these two units ranges from 97.5% to 99.5%.

---

[25] Yevzel'man, I. B., and G. D. Kharlampovish. Neutralization of Exhaust Gas from Phthalic Anhydride Production. Khimicheskaya Promyschlennost (Moscow), 49(6):379-380, 1973.

With the high actual removal efficiencies mentioned above, it is believed that with design modifications, the scrubber is able to remove both PAN and MAN by more than 99%.

5.3.2.3 Conclusion--
From the theoretical considerations of the scrubber operation, it is obvious that the following conditions should be met in designing a scrubber for high efficiency removal of PAN and MAN.

- Since a large quantity of PAN becomes solid particles after entering the scrubber (not before) and is removed as such, the scrubber bed should be able to provide good mixing and at the same time be able to remove the slurry without causing clogging in the bed.

- To enhance the absorption of the uncondensed PAN, it is necessary to operate a portion of the scrubber at high MAN concentration.

To meet the first condition, a fluid bed of packing as described for the design illustrated in Figure 11 is recommended. Venturi scrubbers such as those used in plants 4 and 8 are not particularly effective in achieving this. The packing can be made up of relatively large, but light, smooth-surfaced pieces such as spheres or rings.

To meet the second condition, a multistage operation would be necessary (refer to Figure 11). The first stage can remove most of the PAN by condensation and by absorption. Further absorption of PAN and MAN can be achieved in the second fluid-bed stage where the MAN concentration is well below that of the first stage (0.5% to 3%). To ensure a greater than 99% removal, a third stage of packed bed is recommended.

5.3.3 Liquid Waste Incineration

The liquid purge discharged from the multistage wet scrubber contains about 20 wt percent of maleic acid, 10% of phthalic acid, and 1% of benzoic acid (based on scrubbing of the waste gas from an o-xylene based plant). This concentrated liquid waste can be disposed of by using a thermal incinerator which is shown schematically in Figure 13.

The liquid purge stream is atomized immediately before entering the combustion area of the incinerator by either a steam or an air stream. Fuel gas (e.g., methane) and combustion air (25% in excess of the stoichiometric amount) are introduced into the incinerator in a conventional manner to provide an operating temperature of 760°C to 870°C. Heat recovery can be achieved by means of a coil which can be used either to preheat the combustion air (as shown in Figure 13) or to generate steam.

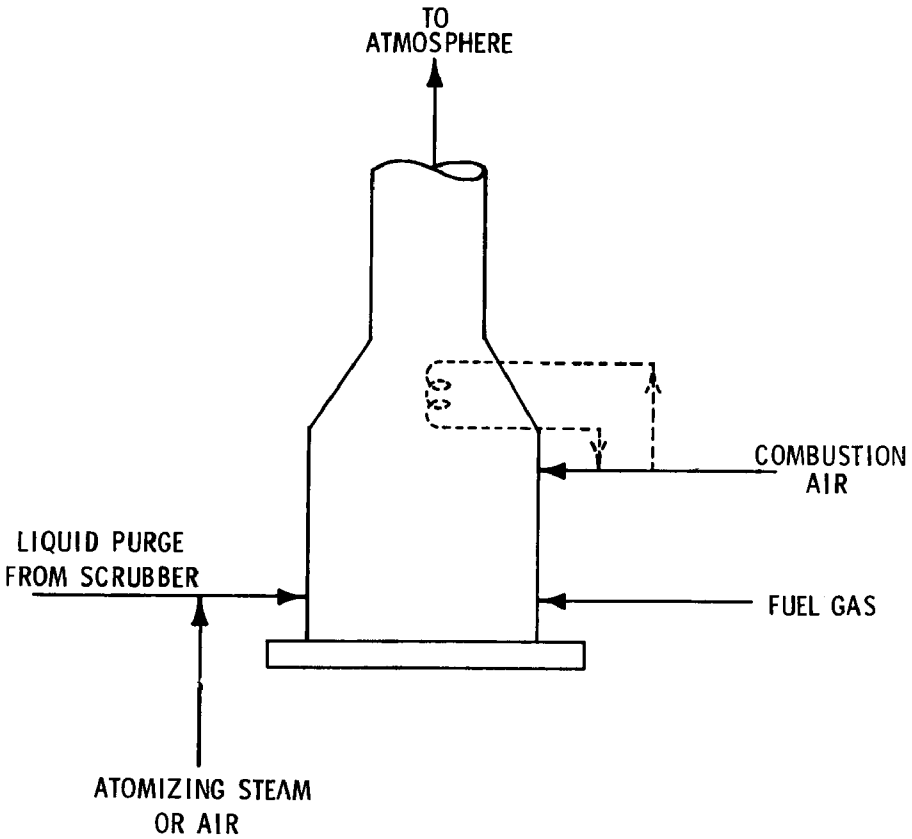

Figure 13. Schematic diagram of thermal incinerator for scrubber purge liquor.[23]

The incinerator reportedly attains an efficiency of 99.9% conversion of organic materials.[23] This high combustion efficiency becomes possible due to the smaller size of this incinerator (as compared with the direct thermal incinerator mentioned in Section 5.1) which permits better mixing in the combustion chamber. The liquid waste (which contains solid particles) is first evaporated and then burned in the main combustion chamber of the incinerator.

From the emission data available and the waste gas concentration shown in Table 6, the estimated combustion efficiency of the incinerator at plant 2 becomes 99.1% to 99.5%. In this incinerator (which is used to incinerate the scrubber purge liquor), the organic content in the feed stream is about one-third of that which can be obtained from the multistage scrubber mentioned before. With a higher organic content in the feed stream, a better conversion efficiency can be expected.

Supposing 99.9% conversion can be achieved in the incinerator (as reported in one literature source[23]), a removal efficiency of 99.1% in the wet scrubber will give an overall control efficiency of 99% for the control system.

5.3.4 Maleic Anhydride Recovery

5.3.4.1 Process Description--

The maleic anhydride recovery process is another alternative for disposal of the scrubber waste liquor resulting from wet scrubbing of the condenser off-gas. The technologies of recovering the maleic anhydride contained in the scrubber waste liquor have been developed by UCB (Brussels, Belgium) and BASF (Ludwigshafen, Germany) separately. As is shown schematically in Figure 14,[26] the recovery process basically consists of three sections: concentration, dehydration, and distillation.

In the first section, the organic compounds from the scrubber purge stream are separated from water in two steps. The first step evaporates water at a closely controlled temperature to avoid any crystallization of organics. In the second step, the remaining water is flashed off in an evaporator, leaving a bottom stream of liquid organics. The water removed in both stages, which contains some residual organic material, is condensed and recycled to the scrubber.

In the second section, the liquid organic stream is sent to a dehydration unit where the organic acids are thermally dehydrated to the anhydrides. The maleic anhydride and dehydration water are distilled and separated by a selective condensation process. The water is recycled to the scrubber, while the crude maleic anhydride is sent to the vacuum distillation column for purification in the third section.

According to one process developer, the maleic anhydride which is recovered by this process meets the norms of purity of the standard MAN obtained by catalytic oxidation of hydrocarbons.[26] Such a product can be substituted for standard MAN in all its outlets. Impurities present in the scrubber purge liquor are separated by the recovery process as anhydrous melt of phthalic anhydride, citraconic anhydride, benzoic acid, and a little maleic anhydride. It was indicated that this melt can be pumped and burned in the same way as a normal heavy fuel.[27]

---

[26]Weyens, E. Recover Maleic Anhydride. Hydrocarbon Processing, 53(11):132-134, 1974.

[27]Personal communication with A. David, UCB S.A., Brussels, Belgium, 21 May 1976.

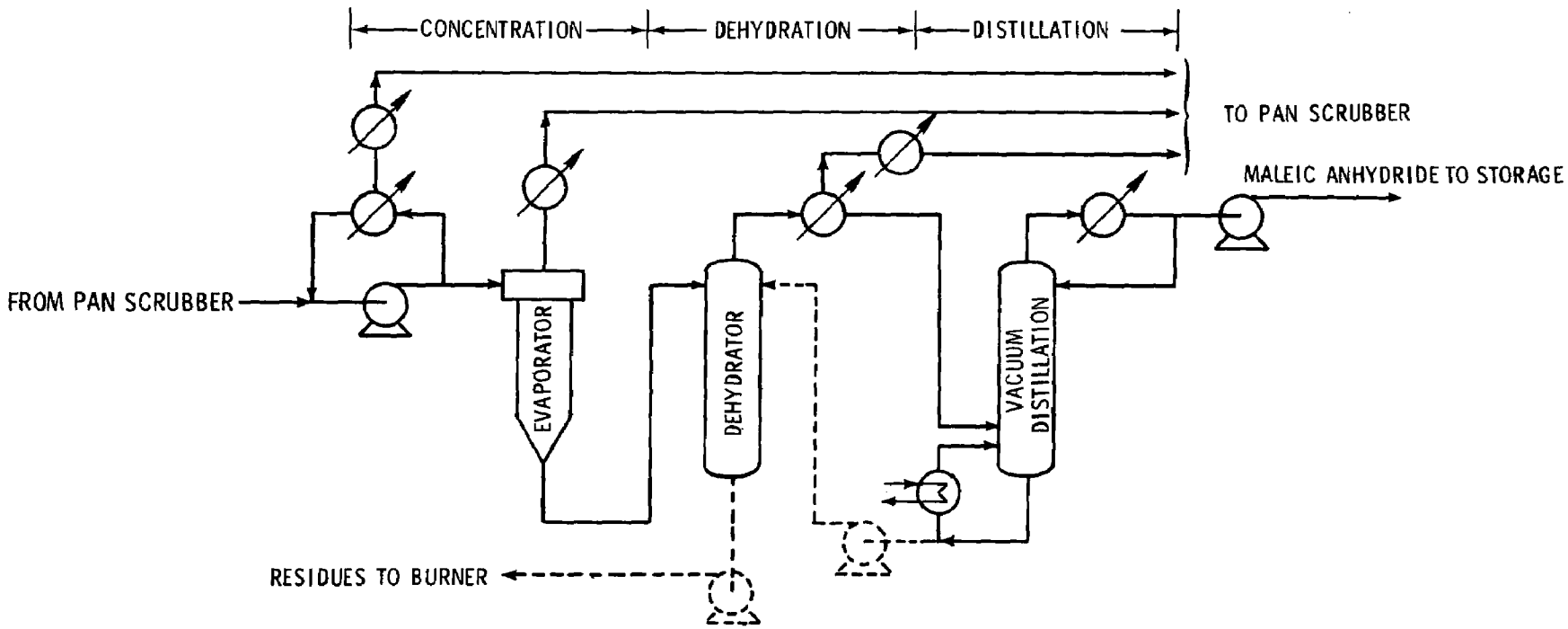

Figure 14. Maleic anhydride recovery process.[26]

When this recovery process is used, demineralized scrubbing water is needed because alkali metal ions act as polymerization catalysts for maleic anhydride and such polymerization may cause explosions.[28]

A commercial plant employing this MAN recovery process (annual capacity: 4,000 metric tons of MAN) has been in operation by BASF in Germany since 1971.[29] Another unit has been recently installed at plant 4 (see Table 8).[30]

5.3.4.2 Technical Evaluation--
When the MAN recovery process is utilized for disposing of the scrubber purge liquor, all the organic constituents in the liquid feed to the process should be dissolved in water. From the technical evaluation of the wet scrubber, it is obvious that deposits or crystals of phthalic acid will be present in the purge liquor if a ∿20% concentration of maleic acid is to be achieved in the scrubber. Therefore, some kind of solid-liquid separation device is necessary to remove the solids from the scrubber purge liquor. In addition to PAN particles, the purge liquor may contain a small percentage of benzoic acid particles due to the low solubility of benzoic acid. Table 9 shows an estimate of the flow rate and composition of the purge liquor from a multistage wet scrubber (described in Sections 5.3.1 and 5.3.2), when treating the waste gas from a representative o-xylene based plant.

TABLE 9. COMPOSITION OF THE PURGE LIQUOR FROM SCRUBBING OF THE WASTE GAS FROM A REPRESENTATIVE o-XYLENE BASED PLANT (kg/hr)

Component	In solution	In particulate form	Total
Phthalic acid	55.4	130.3	185.7
Maleic acid	369.7		369.7
Benzoic acid	1.2	19.0	20.2
Water	1,422.2		1,422.2
TOTAL	1,848.5	149.3	1,997.8

[28]Wirth, F. Recover MA from PA Scrubber Water. Hydrocarbon Processing, 54(8):107-108, 1975.

[29]Personal communication with I. V. Heese, BASF A.G., Ludwigshafen, Germany, 11 June 1976.

[30]Personal communication with R. T. Wedell, Koppers Company, Inc., Chicago, Illinois, 5 October 1976.

It was also estimated that a reciprocating conveyor centrifuge filter with a 10-in.-diameter basket will be able to remove the crystals and deposits from the purge liquor continuously. This device was included in the economic evaluation of the wet scrubber systems utilizing the recovery process.

From Tables 6 and 7, one can see that the MAN content in the waste gas from a naphthalene based plant is only 16% of that from an o-xylene based plant. It is therefore also recommended that the MAN recovery process not be applied to naphthalene based plants.

A disadvantage in use of the wet scrubber/MAN recovery system includes the generation of an anhydrous melt of organics from the recovery process and the solids separated from the purge liquor by filtration. The total waste product from these two sources amounts to about 180 kg/hr. It is suggested by a process developer that the anhydrous melt of organics, which contains phthalic anhydride, citraconic anhydride, benzoic acid, and a small amount of maleic anhydride, can be pumped and burned as a heavy fuel.[27] Presumably the solids separated from the purge liquor can also be burned in a conventional burner.

5.3.5 Biological Wastewater Treatment

5.3.5.1 Process Description--

Biological treatment systems are living systems which rely on biocultures to break down waste organics and remove them from solution. In order to apply biological methods to wastewater treatment, the organic wastes should be biodegradable. Figure 15 shows a system that contains an equalization tank, a neutralization and nutrient addition tank, an aeration tank, a settling tank, and a sludge treatment process. This system is designed to meet the 1977 "Best Practical Control Technology Currently Available" (BPCTCA) wastewater treatment requirements. To meet the 1983 "Best Available Technology Economically Achievable" (BATEA) treatment requirements, dual-media filters and granular carbon columns (shown in Figure 16[31]) should be added to the BPCTCA system.

---

[31] Development Document for Interim Final Effluent Limitations Guidelines and New Source Performance Standards for the Significant Organic Products Segment of the Organic Chemical Manufacturing Point Source Category. EPA-440/1-72/045, U.S. Environmental Protection Agency, Washington, D.C., 1975. 361 pp.

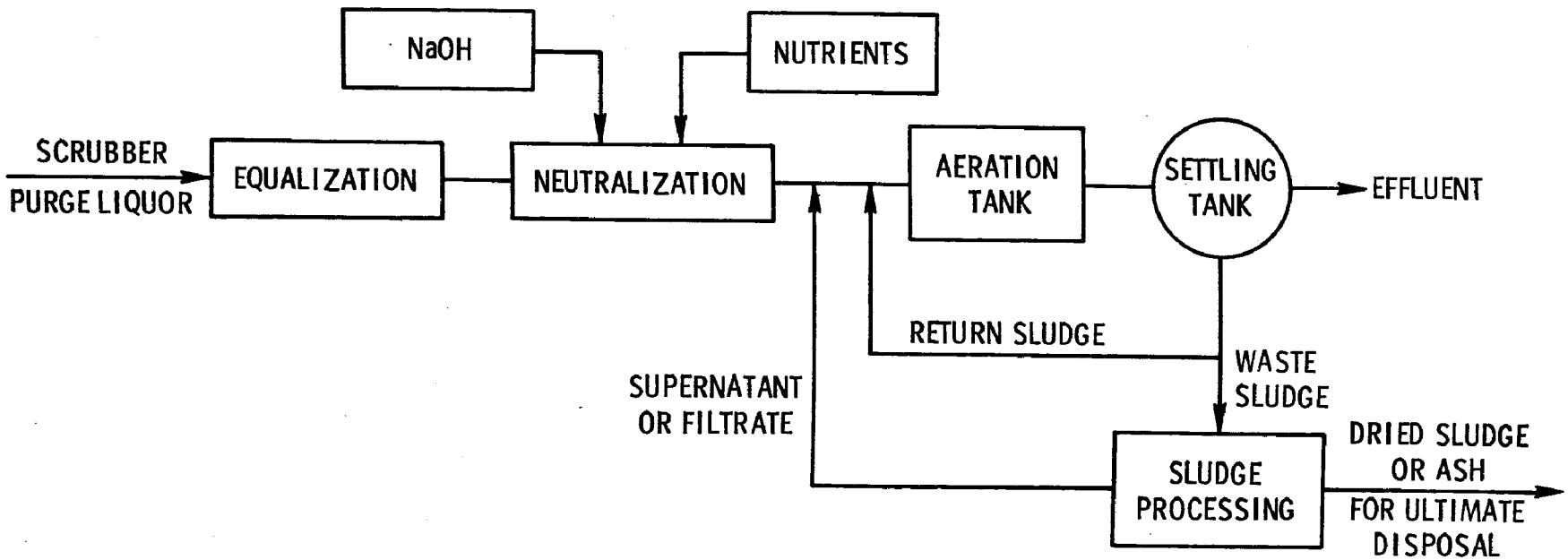

Figure 15. An activated-sludge-based biological wastewater treatment system for 1977 BPCTCA requirements.

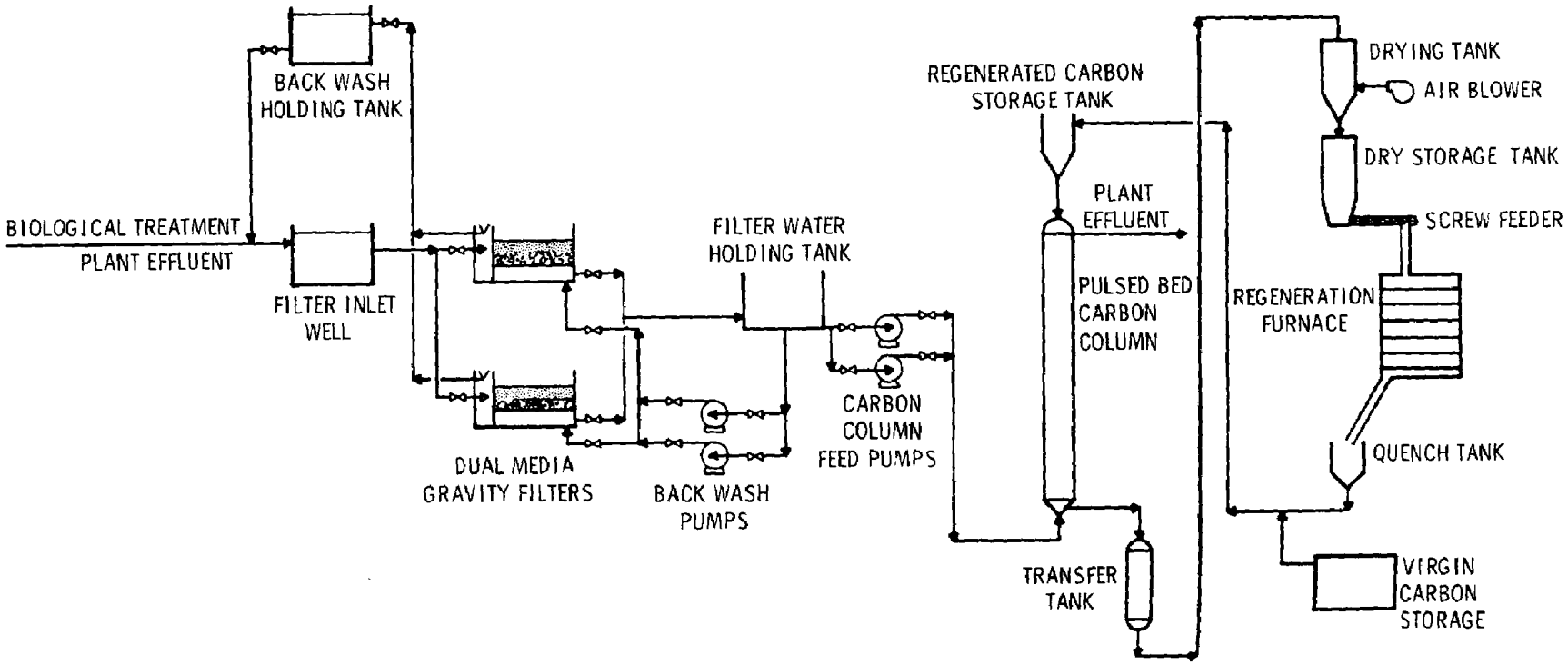

Figure 16. Dual-media filters and granular carbon columns to be added to the BPCTCA system to form a BATEA system.[31]

The removal of organic substances contained in the wastewater occurs in the activated sludge process which consists of an aeration tank and a settling tank. In this process, organic substances are removed by microorganisms either through oxidation to CO_2, H_2O and other derivatives, or through conversion into a settleable form that can be removed by sedimentation. The production of CO_2 and H_2O is called the respiration stage, while conversion of organic contaminants to new bacterial cells which can be settled out by gravity is referred to as synthesis.

Both respiration and synthesis occur in the aeration tank where oxygen is provided to oxidize the organic material and satisfy the biochemical oxygen demand (BOD) of the wastewater. The microbial cells formed in the aeration tank are then separated from the water in the settling tank. Part of the settled activated sludge is recirculated back to the aeration tank to provide sufficient microbial cells for effective destruction of organic wastes.

Although both phthalic and maleic acids contained in the scrubber purge liquor are readily biodegradable, neutralization of the acids is necessary to provide the proper environment (pH) for microbial growth. Furthermore, adequate amounts of nutrients such as nitrogen and phosphorus must be added to the water to maintain a ratio of BOD:N:P of 100:5:1 for the synthesis of bacterial cells.

5.3.5.2 Technical Evaluation--
Biological wastewater treatment systems such as the one described above can only be applied to waste streams containing dilute organic contaminants. An analysis of such a stream from a condenser off-gas wet scrubber has been given in an EPA report.[31] The 5-day Biochemical Oxygen Demand (BOD_5), Chemical Oxygen Demand (COD), and Total Organic Carbon (TOC) of that stream are shown in Table 10.

TABLE 10. ANALYSIS OF A WASTE STREAM FROM CONDENSER OFF-GAS WET SCRUBBER

	BOD_5	COD	TOC
Concentration, mg/l	215	1,080	34
Raw waste loadings, g/kg of PAN product	0.128	0.642	0.02

The maximum strength of the wastewater that can be properly handled by the biological treatment system is about 2,000 mg/liter of COD. To obtain this waste strength, enough water should be used in the wet scrubber to give a flow rate of 400,000 liters per hour for the scrubber purge liquor. This flow rate is equivalent to 1.1×10^4 m^3/d (2.5 million gallons per day). To treat this stream, a municipal size treatment plant is needed, and a large piece of land is required.

In this case, since concentrated scrubber purge liquor is not needed, the recirculation requirement of the wet scrubber is reduced. In addition, sodium hydroxide can be added to the scrubbing liquid for neutralizing phthalic and maleic acids, hence preventing the formation of phthalic acid solid deposits and subsequent clogging of the scrubber bed. Therefore, the scrubber of the special design described in Section 5.3.1 may not be needed.

The neutralization step is costly, however. Based on the mass balance of the system and assuming a cost of $150/ton of NaOH, the annual cost of chemicals for neurtalization alone is $422,000. This cost is equivalent to $7.7 per ton of phthalic anhydride produced and is comparable with the operating costs of other alternative control systems given later in Table 13. Also, the neutralization and subsequent biodegradion will add a large quantity of dissolved solids (inorganic salts) to the water discharge.

Because of the large volume of wastewater to be treated, the large land requirement for the facilities, the extremely high cost of neutralization, and addition of a large amount of dissolved solids in the water discharge, the biological treatment of scrubber purge liquor was not given further consideration.

5.4 CARBON ADSORBER/WASTE INCINERATION

5.4.1 System Description

Due to its nonpolar surface, activated carbon has the ability to adsorb organic and some inorganic materials in preference to water vapor. The amount of materials adsorbed is dependent upon the physical and chemical characteristics of the specific compounds. The equipment used for adsorption processes consists of vessels which hold a bed of the adsorbent and the auxiliary equipment for regeneration of the adsorbent and recovery or disposal of the adsorbate.

A schematic diagram for the carbon adsorption/incineration system is shown in Figure 17. This system can be separated into two areas: one for adsorption-regeneration and the other for disposal (i.e., incineration) of organics (adsorbate) which are desorbed upon regneration of the carbon bed. There are three vessels (carbon beds) in the adsorption-regeneration area, with two in operation while the third is being regenerated.

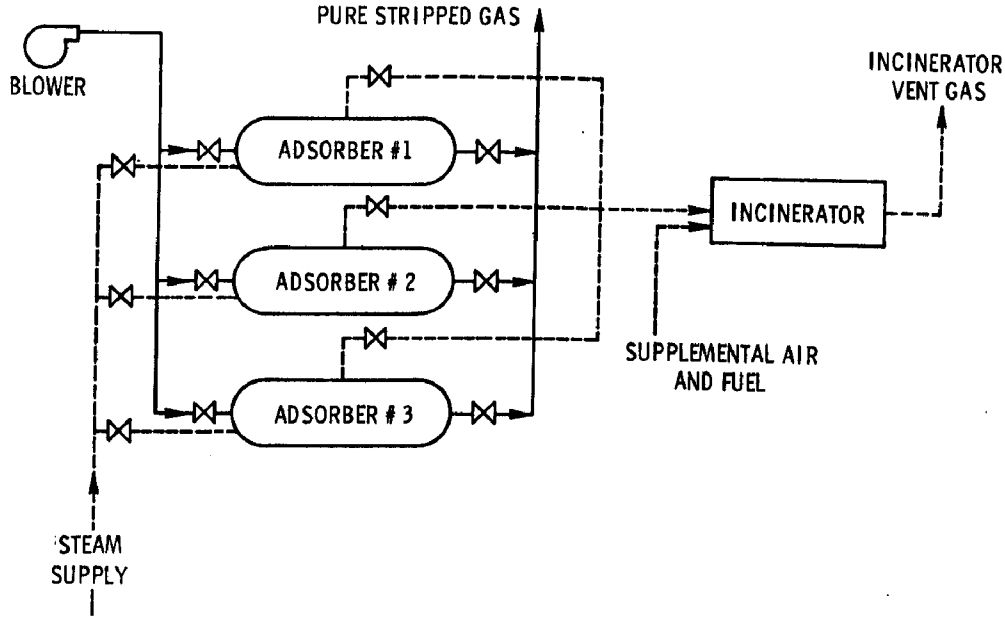

Figure 17. Schematic diagram of the carbon adsorption/incineration system.

When the condenser off-gas begins to pass over a newly regenerated carbon bed, adsorption is 100%. As the retentive capacity of the carbon bed is reached, traces of vapor will appear in the exit stream which is to be discharged into the stack. This retentive capacity represents the amount of adsorbate that the carbon bed, initially saturated, can retain when pure air is passed through the bed while temperature and pressure are constant. It indicates the weight of the particular organic compounds the carbon bed can completely retain.

When the retentive capacity is reached, the carbon bed has reached its breakpoint, beyond which the efficiency of removal decreases rapidly. Figure 18 illustrates this change in operating characteristics of the carbon bed when removing a single organic compound. As the flow of contaminated gas is continued, additional amounts of organic material are adsorbed, but the concentration of the organic compound in the outlet increases and eventually equals that in the inlet. At this stage, the carbon is saturated at the particular operating conditions.

In treating condenser off-gas, there are three organic compounds present in the carbon bed inlet gas. These components will be adsorbed in an approximately inverse relationship to their relative volatilities. At the beginning, all three components will be adsorbed equally; but as the amount of the highest boiling constituent (phthalic anhydride) retained in the bed increases, the lowest boiling component (maleic anhydride) revaporizes. After

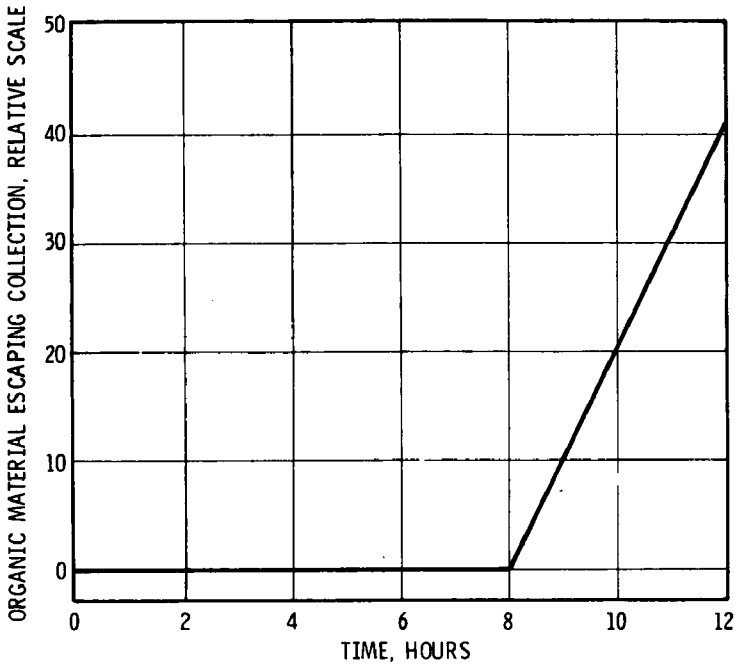

Figure 18. Adsorption efficiency of a carbon bed for a single organic compound.

the breakpoint is reached, the exit vapor consists largely of the more volatile material. This will continue until the second breakpoint is reached, after which benzoic acid will start to desorb from the carbon surface. This operating characteristic is shown in Figure 19. To obtain effective control efficiency in this case, the adsorption cycle should be stopped at the first breakpoint as determined by the detection of vapors in the discharge.

Regeneration is accomplished by passing low pressure steam through the carbon bed. Since the boiling points of the organic contaminants in the condenser off-gas range from 198°C to 295°C, the temperature of the steam should be greater than 300°C in order to drive off the organics from the carbon surface in the regeneration cycle.

The stream leaving the regenerating carbon bed has a high concentration of organics. This stream is directed to a thermal incinerator for destruction of organic contaminants, including PAN and MAN. The ability of the activated carbon to increase the concentration of combustible materials, so as to decrease the fuel requirement for operating the incinerator, permits significant energy consumption savings.

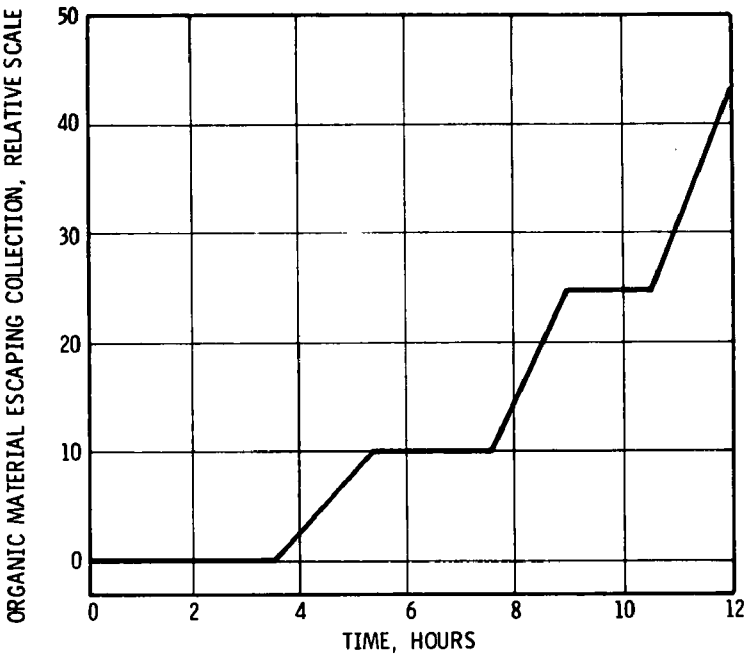

Figure 19. Adsorption efficiency of a carbon bed for a three-component mixture.

The incinerator vent gas is a heated gas stream with the potential of being used for carbon bed regeneration. This usage was not selected because the temperature of this gas stream is above the ignition temperature of the organic compounds that are to be desorbed. This high temperature, together with the presence of oxygen in the gas, imposes a risk of explosion of the carbon bed. Furthermore, the oxygen contained in the incinerator vent gas might undergo reaction with PAN and MAN in the presence of activated carbon under high temperature to form a polymer-type material that is difficult to remove from the carbon surface. Therefore, steam was chosen as the regenerating gas for reactivation of the carbon.

The service duration of a carbon bed between regenerations can be determined by the following relationship:[32]

$$t = \frac{6.43\ (10^6)\ SW}{eQMC} \qquad (6)$$

[32]Kohl, A. L., and F. C. Riesenfeld. Gas Purification. McGraw-Hill Book Company, Inc., New York, New York, 1960. Page 428.

where t = service life, hr
S = retentivity, fractional
W = weight of carbon, lb
e = adsorption efficiency, fractional
Q = quantity of air processed by adsorption equipment, cfm
M = average molecular weight of contaminants
C = concentration of contaminants, ppm

The above formula can also be used to calculate the weight of carbon needed (W) for a desired service life. The retentivity of the carbon varies with the organic materials to be removed and the type of carbon to be used. If the organic vapor or mixture has not been previously handled by the equipment manufacturer or the supplier of the activated carbon, laboratory tests of the material must be run before design conditions can be determined.

5.4.2 Technical Evaluation

From the mass balance of this control system, which is shown in Appendix A, the concentration of organics in the gas stream leaving the regenerating carbon bed is 23 times the concentration in the condenser off-gas. The volume of gas to be incinerated is reduced by 15 times as compared to direct thermal incineration. With the supplemental air to be added to the incinerator for supplying oxygen to facilitate thermal oxidation, the total volume to be heated to the incineration temperature becomes one-tenth that of the condenser off-gas. This reduction in the volume of gas to be incinerated and the high concentration of organics in the gas provide good conditions for effective destruction of pollutants in the incinerator unit.

Supposing this incinerator can achieve a 99.9% destruction of PAN and MAN, the removal efficiency of the carbon adsorption bed should be equal to or greater than 99.1% in order to have an overall control efficiency of 99% for the system. From the theory of carbon adsorption described in the process description, this process can achieve close to 100% removal of organics. With the retentivity of the carbon system unknown, it is difficult to determine whether a reasonable service life of the carbon bed can be obtained using reasonable amounts of activated carbon (refer to Equation 6 for their relationship).

Judging from the physical properties of PAN and MAN, it seems reasonable to believe that their retentivity on a carbon bed would be relatively high and would give favorable conditions for the carbon system. This speculation is based on the relatively high molecular weights and high boiling points of the organic components.

Since steam is to be used to regenerate the carbon bed, hydrolysis of PAN and MAN to corresponding acids and the high temperature needed will impose corrosion problems on the carbon handling

equipment. Stainless steel vessels, stainless pipes, and corrosion resistant valves are necessary in constructing the carbon system. Another problem is the existence of particulate PAN which appears occasionally in the condenser off-gas. Fortunately, these PAN solid particles, to be retained by the carbon bed, can be vaporized during the regeneration cycle, eliminating the clogging of the carbon bed that is usually encountered when treating gases containing particulate materials.

5.4.3 Conclusion

From the above discussion, an activated carbon/incineration system seems to be an attractive alternative for controlling the condenser off-gas. Since this type of waste gas has not been handled by any equipment manufacturer or carbon supplier, laboratory tests are recommended to confirm the operating parameters such as retentivity and steam rate that have been assumed and used in the technical evaluation (see Appendix A). The possibility of polymer-like material forming on the carbon surface when high temperature steam is used for carbon bed regeneration should also be investigated.

5.5 CONDENSATION/FIBER BED FILTRATION

After examining the equilibrium vapor pressure of PAN and MAN at different temperatures, it was found that a substantial amount of PAN and MAN can be condensed to form solid particles if the condenser off-gas is cooled (by refrigeration) to a lower temperature (e.g., the cooling of the off-gas from an o-xylene based process from 66°C to 20°C will result in 99.82% condensation of PAN). A control scheme was therefore considered which consists of cooling the off-gas and subsequently removing the water-soluble particles with a fiber filter bed. A schematic diagram of this control system is shown in Figure 20.

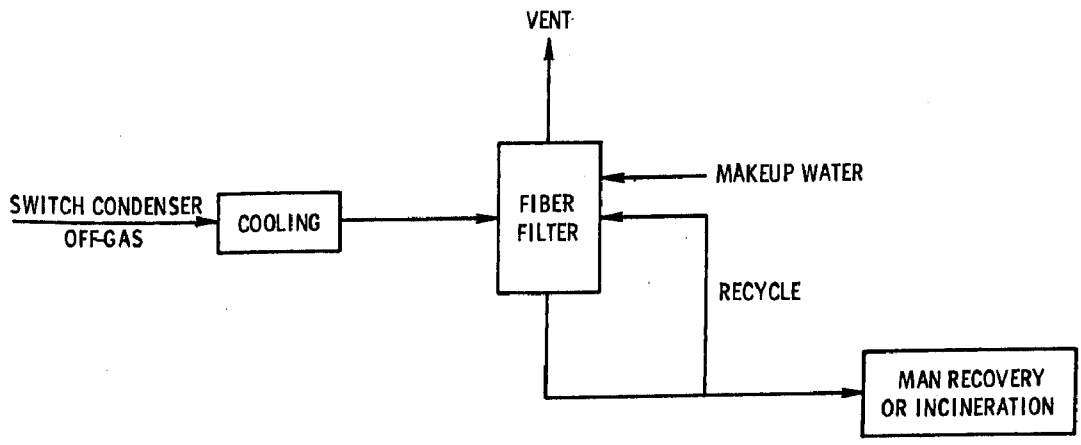

Figure 20. Schematic diagram for the condensation/filtration system.

A vendor of a fiber filter bed system was contacted to learn whether the system can remove PAN and MAN from off-gas. This fiber filter system has the advantage that it is almost an absolute filter for particles even in the submicron size range. The water-soluble particles collected can be washed off the filter bed by irrigating or spraying with water. The liquid stream can then be directed to the MAN recovery process or to a liquid waste incinerator.

The technical evaluation indicates that water condensates will be formed in the cooling section, causing the formation of slurry, in addition to the formation of condensed particles. Also, PAN and MAN will condense and build up on the surface of the heat exchanger. The surface condensation and slurry formation in the cooling section will decrease the cooling efficiency and block the flow path.

In addition, the cooling will probably not produce particles small enough to require a fiber filter bed.[33] Therefore, this control scheme was not given further consideration in this task effort.

Another alternative control scheme consists of cooling the waste gas to its water dew point (to prevent the formation of slurry), then scrubbing with a venturi scrubber to remove the particles and the uncondensed vapors. In this case, the formation of slurry can be prevented; however, the surface condensation of PAN and MAN still remains.

5.6 CHAUNY PROCESS (PROCESS MODIFICATION)

5.6.1 Process Description

A new process for the production of phthalic anhydride from o-xylene has been developed by Rhone-Poulenc Industries of France. The flow diagram for this new process (shown in Figure 21[34]) is very similar to that for the BASF process (Figure 2), with the following differences:[34,35]

- No sulfur or sulfur dioxide is required in the reactor feed to maintain catalyst activity. Hence, this source of pollution is eliminated.

---

[33] Personal communication with E. D. Kennedy, Monsanto Enviro-Chem, Inc., St. Louis, Missouri, 8 June 1976.

[34] Phthalic Anhydride Process, CHAUNY. Rhone-Poulenc S.A., Neuilly sur Seine, France, 1976. 17 pp.

[35] Personal communication with J. C. Zimmer, Rhone-Poulenc S.A., Neuilly sur Seine, France, 13 May 1976.

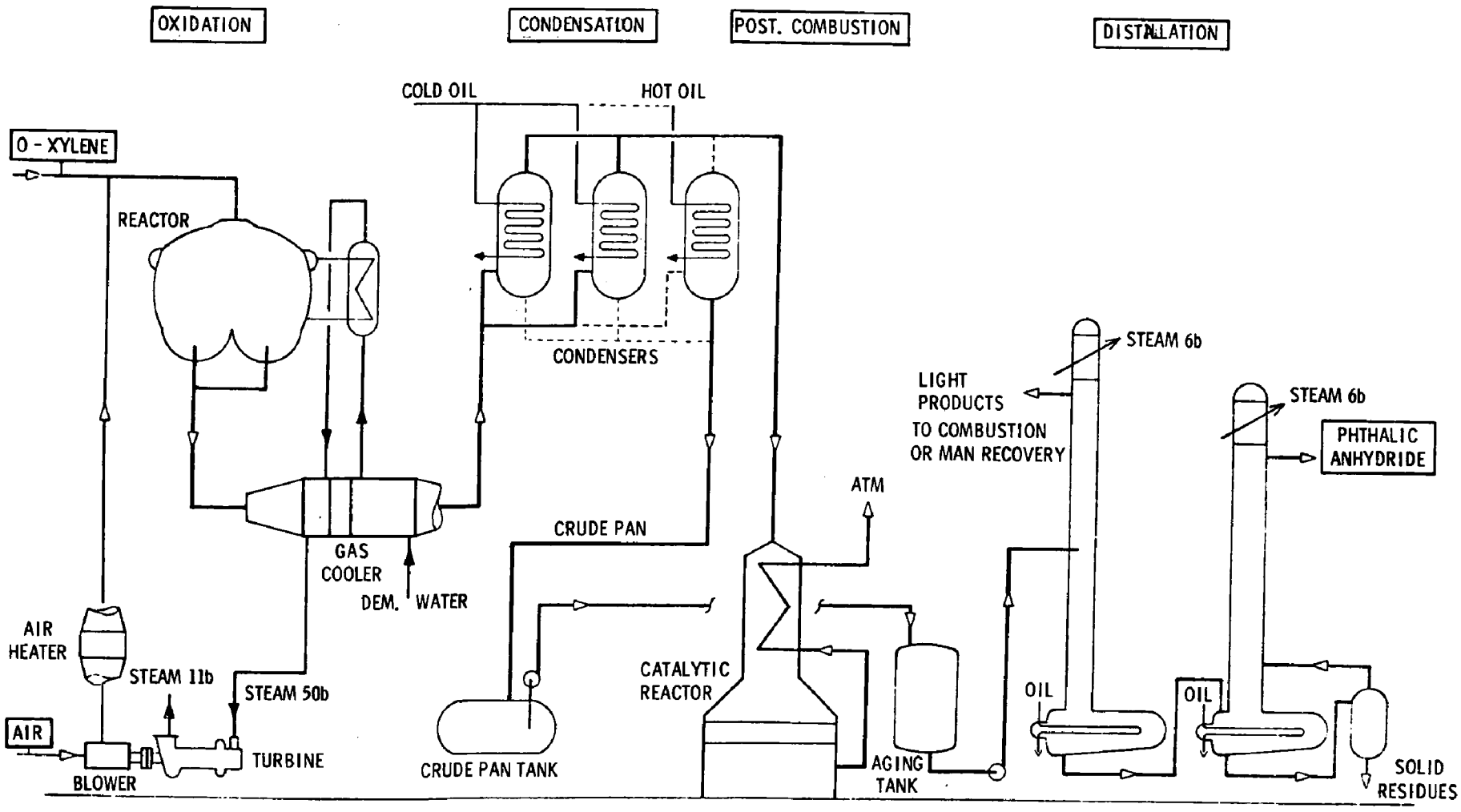

Figure 21. CHAUNY process for PAN manufacture.[34]

- The switch condenser off-gas is controlled by means of a catalytic incinerator which was developed for this particular use. The control system is energetically self-supported due to low temperature combustion and a lower air-to-o-xylene feed ratio as compared with the BASF process (22/1 versus 25/1).

- The 22/1 air-to-o-xylene ratio enables a high steam recovery efficiency and its conversion to mechanical energy for air compression by using steam turbine, instead of an electric motor.

- The liquid waste stream from the distillation section is further processed to produce solid pellets, which are disposed of by burning.

Using this process, a 15 x 10^3 metric tons/yr plant has been in operation since 1971 in Aisne, France. The process has also been licensed to Resins, Incorporated (Philippines) and to Reposa (Spain).

5.6.2 Technical Evaluation

It is claimed by the process developer that the catalytic incinerator incorporated in the process enables a complete oxidation into CO_2 and H_2O of all the polluting substances contained in the waste gas.[35,36] The information supplied by the developer indicates that in Europe, where there is no specific regulation on phthalic anhydride plant emissions, the adopted working conditions of the incinerator have given the following results in the CHAUNY process:[35]

Polluting substance	Percent conversion
CO	100
MAN	97
PAN	100
Miscellaneous	100

A typical analysis of the condenser off-gas from the CHAUNY process is shown in Table 11.[36] The mass flow rate of this off-gas was not available to MRC for determing whether the 97% reduction of MAN in the CHAUNY process can result in an emission of MAN which is equal to or smaller than that from a conventional process of the same capacity with 99% control efficiency. However, it was indicated that depending upon the target and the local regulations, it is possible to select the type and the quantity of catalyst that will provide practically a 100% conversion on all the polluting components.

---

[36]Personal communication with J. C. Zimmer, Rhone-Poulenc S.A., Neuilly sur Seine, France, 1 July 1976.

TABLE 11. TYPICAL ANALYSIS OF CONDENSER OFF-GAS FROM THE CHAUNY PROCESS[36]
(Percent by weight)

Phthalic anhydride	0.041
Maleic anhydride	0.243
Citraconic anhydride	0.015
Benzoic acid	0.031
Acetic acid	0.015
o-Toluic aldehyde	0.012
Miscellaneous organics	0.002
o-Xylene	0.09
H_2O	3.42
N_2	76.30
CO	0.40
CO_2	2.2
O_2	17.21

If this process is to be used for the purpose of controlling PAN and MAN emissions, a new PAN plant will have to be built. Thus, this control alternative is not applicable to existing PAN plants, and it should be considered only as a process for future new plants.

5.7 SUMMARY OF THE TECHNICAL EVALUATION

The results of the technical evaluation for the nine alternative control methods discussed above are summarized in Table 12. The last line in the table indicates whether a specific alternative was selected for economic and energy utilization evaluations.

TABLE 12. SUMMARY OF TECHNICAL EVALUATION OF CONTROL ALTERNATIVES

	Thermal incinerator/ steam generation	Thermal incinerator feed gas preheating	Catalytic incinerator/ feed gas preheating	Wet scrubber/liquid waste incineration	Wet scrubber/ MAN recovery	Wet scrubber/biological waste treatment	Carbon adsorber/ waste incineration	CHAUNY process (with control)	Condensation/fiber bed filtration
Is the control system currently being used by the PAN industry?	Yes	No	No	Yes	Yes	Yes	No	Yes	No
Can 99% control efficiency be reasonably expected?	Yes	Yes	No	Yes	Yes	Yes	Yes	Yes	No
Important parameters affecting control efficiency	Temperature Residence time Mixing	Temperature Residence time Mixing Degree of pretreating	Temperature Catalyst volume Catalyst activity	Solubilities of PAN and MAN in water Equilibrium vapor pressure	Solubilities of PAN and MAN in water Equilibrium vapor pressure	Solubilities of PAN and MAN in water Equilibrium vapor pressure	Carbon capacity Boiling points of organic pollutants	-	Equilibrium vapor pressure Cooling temperature
Applicability to PAN plants	Yes	No, due to possibilities of heat exchanger explosion	Yes, but subject to catalyst fouling and possible polymer coating	Yes	Yes, for o-xylene based plants only	No, due to large BOD loading	May be	Yes, but for future new plants only	No, due to blocking of gas passage in the cooler
Unique operating or maintenance requirements	No	No	Frequent replacement of catalyst	Corrosion-resistant materials needed	Corrosion-resistant materials needed	Corrosion-resistant material needed Have to modify the process to meet future water effluent standards	Corrosion-resistant material needed	No	Refrigeration of gas needed
Are secondary wastes generated?	No	No	No	No	Solid organic waste and anhydrous melt of organics (can be burned in conventional burners as fuel)	No	No	No	No
Other technical advantages	Easy to sustain combustion (good reliability) Can increase efficiency by simply increasing fuel consumption Low maintenance requirements Long operating life CO is converted to CO_2 No thermodynamic limitation on conversion efficiency	Fuel savings due to preheating CO is oxidized to CO_2	Fuel savings by operating at lower temperature CO is converted to CO_2	Dilute waste can be concentrated for effective incineration Low equilibrium PAN and MAN vapor pressures enable efficient removal With a change in design, the clogging problem in scrubber can be avoided Waste streams from the purification section can also be treated in the same system	Valuable chemical is recovered from waste Dilute waste can be concentrated for easy handling Low equilibrium vapor pressures of PAN and MAN With a change in design, the clogging problem in scrubber can be avoided	NaOH can be added to the scrubbing water and thus prevent clogging of the scrubber by solids buildup	Dilute waste can be concentrated for effective incineration High control efficiency can be obtained by using either more carbon or more frequent regeneration	No sulfur or sulfur dioxide is required in the reactor feed The associated catalytic incinerator is energetically self-supported The catalytic incinerator can achieve high conversion efficiency The liquid waste stream from distillation section is processed to form solid pellets for burning	The fiber filter is almost an absolute filter for particles
Other technical disadvantages	High fuel consumption Difficult to achieve good mixing when treating large volume of waste gas There should be a market for steam generated	Feed gas preheating reduces the size of flame and thus the combustion efficiency Sustained fires in the exchanger effluent gas side will damage the exchanger Safety and operations problems in existing plants	Subject to catalyst poisoning, fouling, and possible polymer coating Large volume of catalyst or high temperature needed for high conversion efficiency	CO emissions are not controlled The hardness of the water contained in the purge liquor is emitted in the incinerator effluent gas Excessive emissions can occur from scrubber when there is a recirculating water pump failure Low removal efficiency for aldehydes which may be present in the off-gas	CO emissions are not controlled Need disposal of by-product waste Demineralized water is needed for the scrubber Excessive emissions can occur from scrubber when there is a recirculating water pump failure Filtration needed to remove solids in purge liquor Low removal efficiency for aldehydes which may be present in the off-gas Not applicable to naphthalene-based plants	CO emissions are not controlled Large amount of NaOH needed for neutralization Large quantity of waste water to be treated Large quantity of dissolved solids in the water discharge	Never been applied to PAN industry Possible polymerization of PAN and MAN on carbon surface at high temperatures CO emissions are not controlled	Can be used only when building a new plant	Water condensates will be formed in the cooling section to form slurry PAN and MAN will build up on the surface of heat-exchanger Above phenomena will decrease cooling efficiency and will clog the heat-exchanger
Selected for economic and energy utilization evaluation?	Yes	No	No	Yes	Yes	No	Yes	Yes	No

SECTION 6

ECONOMIC EVALUATION AND ENERGY REQUIREMENTS

The economic and energy requirement evaluations were performed for the existing control systems and for the candidate control systems which can give a 99% removal of PAN and MAN. Evaluations were made for the control of switch condenser off-gas from a representative o-xylene based plant with flow rate and composition as described in Section 4.2.

Evaluations for the existing control systems were based on typical designs and typical operating conditions for control systems in the existing plants. Details of these systems including mass balances are presented in Appendix A. The existing control systems considered here include the following:

- Direct thermal incinerator with steam generation
- Direct thermal incinerator with feed gas preheating
- Wet scrubber with liquid waste incineration

The candidate control systems considered are those recommended alternatives identified in the technical evaluation summary (see Table 12). The candidate systems, derived either from modifications of existing control technologies or from use of emerging control technologies, are the following:

- Direct thermal incinerator with steam generation
- Wet scrubber with liquid waste incineration
- Wet scrubber with MAN recovery
- Carbon adsorber with waste incineration
- CHAUNY PAN manufacturing process

The first four candidates are add-on control systems. The last one is a modified PAN manufacturing process with its associated control equipment; it was described in detail in Section 5.6. The mass balance and operating conditions for each of the four add-on systems are given in Appendix A.

Cost and energy usage estimates for existing and candidate add-on control systems, for the conventional PAN manufacturing process, and for the CHAUNY process are summarized in Table 13 and discussed further below.

TABLE 13. SUMMARY OF RESULTS OF ECONOMIC EVALUATION AND ENERGY REQUIREMENT STUDY

Alternative	Capital, cost, 10^6\$	Capitalized cost, 10^6\$	Operating cost,[a] \$/metric ton PAN	Energy Usage: Natural gas,[b] 10^6 m^3/yr	Electricity, 10^5 kWH/yr	Recovery (credit) 10^{13} J	Net Total[c] 10^{13} J
1. Existing control systems							
Thermal incinerator/steam generation	2.34	4.16	13.15	34.9	-[d]	88	34
Thermal incineration/gas preheating	1.62	2.88	9.30	14.8	19.8	-	54
Wet scrubber/waste incineration	2.60	4.61	10.95	4.1	30.0	-	18
2. New or improved add-on control systems							
Thermal incinerator/steam generation	2.41	4.28	15.62	44.5	-	118	40
Wet scrubber/waste incineration	2.94	5.22	11.94	1.0	39.5	-	7
Wet scrubber/MAN recovery	5.22	9.27	-8.61	3.0	46.0	-	15
Carbon adsorber/waste incineration	1.59	2.82	6.66	2.7	7.8	-	9
3. Conventional and CHAUNY manufacturing processes							
Conventional process (without control)	15.58	27.68	218	-	590	-	57
CHAUNY process (with control)	16.77	48.93	202	-	88.5	-	9

[a]For comparison purpose, the sale price of PAN is \$510/ton as of November 22, 1976.[37]

[b]Also includes the natural gas needed for producing steam which is to be consumed by the control systems.

[c]Assume that the lower heating value of natural gas is 33,600 J/m^3 (950 Btu/ft^3) and that the efficiency in electric power generating is 37%.

[d]Not applicable.

[37]Chemical Marketing Reporter. 210(21):50, 1976.

6.1 ECONOMIC EVALUATION

Economic evaluation includes estimates of capital, capitalized, and operating costs for both existing and candidate control systems. Items included in the capital cost calculations are: equipment cost, installation cost, taxes and insurance, startup cost, interest on construction capital, and working capital. Capitalized cost is a fund large enough to permit the interest it earns to pay for the periodic replacement of the equipment for an indefinitely long period of time. Items covered in the operating cost calculations include: labor, raw materials, utilities, maintenance, overhead, taxes and insurance, depreciation, annual interest charge, and byproduct credit.

The cost model and economic assumptions utilized in the estimation of these costs are presented in Appendix B. The detailed estimates of these costs, which are summarized in Table 13, are contained in Appendix C. The cost figures for existing systems were based on the data reported in a previous study which was based on a plant survey and equipment manufacturer quotations.[13] The cost figures for new or modified control systems were derived from information supplied by process developers and from data in the previous study mentioned above. The time frame for cost estimates is July 1976.

Among the candidate control systems (which are either new or improved systems), the wet scrubbing with MAN recovery system has a negative operating cost, due to the MAN byproduct credit. This means that there will be a net return when this system is in operation and the byproduct is marketed. However, the system is also characterized by a high capital investment requirement and a high capitalized cost. The capital related costs of this system are about double the corresponding costs for other alternatives. It should be mentioned here that the costs for disposal of the anhydrous melt of organics from the recovery process and the solids separated from the purge liquor by filtration are not included. According to a process developer, disposal is not difficult because these organic substances can be pumped and burned as a heavy fuel.

Direct thermal incineration with steam generation has the highest operating cost because of the large amount of fuel needed to heat the condenser off-gas to a sufficiently high temperature for efficient destruction of organic pollutants. Without the waste heat boiler for generating byproduct steam, the operating cost will be even higher.

In the wet scrubber/waste incineration system, the organic pollutants contained in the off-gas are effectively concentrated in the purge liquor. This reduces to a great extent the

size of the waste incinerator and the cost of supplemental fuel needed, resulting in a lower operating cost than that of direct thermal incineration. In this case, a large portion (60%) of the operating cost is derived from depreciation and the interest charge on capital investment.

The carbon adsorption/incineration system is characterized by both low capital investment and low operating cost. It should be noted, however, that the cost figures were derived from a rough estimate of equipment cost obtained from a carbon and carbon-handling manufacturer. A representative of the manufacturer indicated that their preliminary laboratory evaluation was inconclusive because insufficient data were obtained to determine the design and operating conditions required to achieve a 99% removal of PAN and MAN from the condenser off-gas. Further engineering study is necessary to confirm that the activated carbon process can remove organic pollutants to the desired level, and that the capital and operating costs presented in Table 13 are realistic. It is therefore recommended that these cost figures be used only for order-of-magnitude comparison purposes.

Table 13 also shows the cost estimates for both conventional and CHAUNY manufacturing processes. There is no significant difference in capital cost between these two processes. There is, however, a large difference in capitalized cost, with that of the CHAUNY process being about 50% more than that of the conventional process with control systems included. This means that, while producing the same amount of PAN and achieving the same degree of air pollution control, the CHAUNY process will need more capital at the start to earn enough interest to pay for the periodic replacement of the process equipment. This is due to the relatively short useful life period (5 years) of the CHAUNY process equipment.[38] Since the interest on capital cost and depreciation based on a 5-year life are included in the operating cost, this high capitalized cost becomes less important.

6.2 ENERGY REQUIREMENTS

There are basically four items related to energy consumption in the operation of control systems: (1) fuel burned in the incinerator to raise the temperature of the mixed gas; (2) fuel needed to generate steam for use in evaporation (in MAN recovery) and carbon regeneration; (3) energy needed to generate the electricity required to drive the draft fan and pumps; and (4) energy contained in the steam recovered from the waste heat boiler.

---

[38]Zimmer, J. C. New Phthalic Anhydride Process. Hydrocarbon Processing, 53(2):111-112, 1974.

The energy requirements for the existing and candidate add-on control systems, the conventional manufacturing process, and the CHAUNY process are summarized in Table 13. In this table, items 1 and 2 mentioned above were combined and expressed as the amount of natural gas required. Item 4 was subtracted from the sum of the other three items to arrive at the net total energy usage shown in the last column of Table 13.

Among the add-on candidate systems, direct incineration/waste heat boiler has the highest energy requirement. The energy requirement of this system is 2.6 times that of the second highest energy-intensive control system (wet scrubber/MAN recovery) in the same category. This is due to the large volume of low-heating value dilute gas which is to be incinerated. The wet scrubber/MAN recovery system requires a large amount of steam for the MAN recovery process. This steam requirement constitutes 70% of the system's total energy usage.

Wet scrubbing/waste incineration and carbon adsorption/waste incineration both have low energy requirements because the dilute organic contents in the condenser off-gas are effectively concentrated by scrubbing and adsorption processes to produce high-heating-value waste streams for incineration. Without this concentration step, the direct incineration system requires fuel 25 times that of the incineration portion of these two systems. With the new design of scrubber, the energy consumption of the improved wet scrubber/waste incineration system is less than half of that of the corresponding existing system.

A difference in energy requirements between the conventional and the CHAUNY processes is also shown in Table 13. The conventional process without control consumes about seven times the energy required for the CHAUNY process with control. The CHAUNY process enables a high steam recovery efficiency (due to its low air/o-xylene ratio) and conversion of the steam into mechanical energy for air compression by using a steam turbine, instead of an electric motor. There is another reason for its low energy requirement: according to the process developer, the associated catalytic incinerator for air pollution control is energy self sufficient and does not need supplemental fuel.

SECTION 7

MOST FEASIBLE ALTERNATIVES AND RECOMMENDED DEMONSTRATION PROGRAMS

7.1 SELECTION OF MOST FEASIBLE SYSTEMS

The technical, economic, and energy considerations for the new and improved candidate add-on control systems that can achieve 99% control of PAN and MAN are summarized in Tables 14 through 17. In these tables, the advantages and disadvantages of each candidate under the above three areas of consideration are listed for comparison purposes. Based on these comparisons, and the rationales for selection of alternatives presented below, the following control systems were chosen as the most feasible:

1. Thermal incinerator/steam generation
2. Wet scrubber/MAN recovery
3. Carbon adsorber/waste incineration

Although thermal incinerator/steam generation has some drawbacks, such as high fuel consumption, high operating cost, and the need of a market for the steam generated, it has the highest operating reliability among the alternatives. This is because external fuel supply is used, and it is therefore easy to sustain combustion regardless of transient changes in the main process operation. Also, carbon monoxide, a pollutant which is present in the condenser off-gas, is oxidized to form CO_2. The control efficiency of the incinerator can be increased simply by increasing the fuel consumption, without having to replace the unit. In addition, it has low maintenance requirements and long operating life. Based on the above considerations, the direct incinerator/steam generation was chosen as the most favorable system.

Wet scrubbing/MAN recovery is the second choice, mainly because of its profitability resulting from the recovery of MAN. This economic advantage is based on the assumption that the MAN recovered can find a market. This system is also characterized by its high initial capital requirement, and its economic advantage is strongly influenced by the capacity of the PAN plant. With the future trend to larger PAN plants, the use of the MAN recovery process is even more attractive. On the other hand, owing to its inability to control CO emissions, this system cannot be applied to certain locations where state regulations limit the

TABLE 14. TECHNICAL, ECONOMIC, AND ENERGY CONSIDERATIONS FOR THERMAL INCINERATOR/STEAM GENERATION

	Advantages	Disadvantages
Technical considerations	• Easy to sustain combustion (good reliability) • Can increase efficiency by simply increasing fuel consumption • CO is converted to CO_2 • No thermodynamic limitations to conversion efficiency • Low maintenance requirements • Long operating life	• Difficult to achieve good mixing when treating large volume of waste gas • Fuel availability is a potential problem
Economic considerations	-----	• Highest operating cost among the alternatives • A market (or use) of steam generated is needed
Energy considerations	-----	• Highest energy consumption among the alternatives

TABLE 15. TECHNICAL, ECONOMIC, AND ENERGY CONSIDERATIONS FOR WET SCRUBBER/WASTE INCINERATION SYSTEM

	Advantages	Disadvantages
Technical considerations	• Low equilibrium PAN and MAN vapor pressures enable efficient removal • Dilute waste is concentrated for effective incineration • With a change in scrubber design as recommended, clogging problem can be avoided • Waste streams from the purification section can also be treated in the same system	• CO emissions are not controlled • Low removal efficiency for aldehydes which may be present in the off-gas • The hardness of the water contained in the purge liquor is emitted in the incinerator effluent gas
Economic considerations	-----	• Relatively high operating cost (next to incineration/heat recovery system)
Energy considerations	• Low energy consumption	-----

TABLE 16. TECHNICAL, ECONOMIC, AND ENERGY CONSIDERATIONS FOR WET SCRUBBER/MAN RECOVERY SYSTEM

	Advantages	Disadvantages
Technical considerations	• Low equilibrium vapor pressures of PAN and MAN • Dilute waste is concentrated for recovery of valuable chemical • With a change in design as recommended, clogging problem in scrubber can be avoided	• CO emissions cannot be controlled • Demineralized water is needed for the scrubber • Byproduct waste must be disposed of • Low removal efficiency of aldehydes which may be present in the off-gas • Not applicable to naphthalene based plants
Economic considerations	• Extremely low operating cost (net profit if product can be marketed)	• Highest capital cost among the alternatives
Energy considerations	-----	• Relatively high energy consumption (next to incineration/heat recovery)

TABLE 17. TECHNICAL, ECONOMIC, AND ENERGY CONSIDERATIONS FOR CARBON ADSORBER/WASTE INCINERATION SYSTEM

	Advantages	Disadvantages
Technical considerations	• Dilute waste is concentrated for effective incineration • High control efficiency can be obtained by using either more carbon or more frequent regeneration	• Has never been applied to PAN industry • CO emissions are not controlled • Possible polymerization of PAN and MAN on carbon surface at high temperatures
Economic considerations	• Lowest capital and operating costs among the alternatives	-----
Energy considerations	• Low energy consumption	-----

discharge of CO. Also, the scrubber has a poor absorption efficiency for aldehydes which might be present, in some cases, in the condenser off-gas.[22]

The wet scrubber/waste incineration system was not selected because the scrubber has the disadvantages mentioned above, and the system has a much higher operating cost.

For a new o-xylene based PAN manufacturing plant, use of the CHAUNY process, rather than the conventional process, appears to be a better choice. This is due to its much lower total energy consumption, efficient pollution control for both organics and carbon monoxide, and compactness of the process equipment. In addition, since no sulfur or sulfur dioxide is required in the reactor feed, there are no emissions of sulfur oxides from the CHAUNY process.

7.2 RECOMMENDED DEMONSTRATION PROGRAMS

Recommended demonstration programs for the control systems chosen as most feasible were developed based on the development stage of the individual unit processes comprising the control systems and the technical evaluation of each control system as mentioned in Section 5. The demonstration programs, including the time needed and costs involved, are described below for add-on control systems. They are also summarized in Table 18. (A demonstration program for the CHAUNY PAN manufacturing process was not recommended because the process has been in operation in France since 1971. It has also been licensed to manufacturers in the Philippines and Spain, and therefore is well demonstrated.)

7.2.1 Thermal Incinerator/Steam Generation

Systems similar to this type are in operation at two existing plants. These two incinerators are being operated at a temperature of 700°C, giving control efficiency of 95% (design control efficiency is 96.5% at 760°C at a different flow rate).[13,14,19] The demonstration program for this system includes testing at one of the two units to verify that the temperature increases or design changes described below can yield a 99% destruction of PAN and MAN.

7.2.1.1 Increase of Operating Temperature--

The operating temperature of the incinerator should be increased to about 860°C, and measurements should be made to determine whether this change will give 99% removal of combustible pollutants, particularly PAN and MAN. If the desired removal efficiency can be obtained at 860°C or any other reasonable temperature, this existing incinerator/waste heat boiler can be used for further demonstration purposes. This project would take about 6 months and cost about $20,000.

TABLE 18. SUMMARY OF ESTIMATED COST AND TIME REQUIREMENTS FOR THE RECOMMENDED DEMONSTRATION PROGRAMS

Demonstrated program	Time required, months	Estimated cost, $
1. DIRECT INCINERATION/WASTE HEAT BOILER		
A. Increase of operating temperature	6	20,000
B. Development of improved incinerator[a]		
1. Measurement of temp distribution	1	6,000
2. Selection of burner and mixing devices	6	20,000
3. Full-scale demonstration	12	100,000
2. WET SCRUBBING/MAN RECOVERY		
A. Pilot-scale testing of improved scrubber	18	120,000
B. Full-scale demonstration of scrubber	30	2,500,000
3. CARBON ADSORPTION/INCINERATION		
A. Laboratory testing of carbon process	6	25,000
B. Full-scale operation of the system	30	1,700,000

[a]If the desired removal efficiency can be obtained by increasing the operating temperature, this phase of the demonstration program is not needed.

7.2.1.2 Development of Improved Incinerator--
If an increase in operating temperature does not result in the desired removal efficiency, further steps should be taken to improve the performance of the incinerator, particularly the mixing efficiency in the burner-mixing section. The three steps involved in this phase are described below.

7.2.1.2.1 Measurement of temperature distribution--The purpose of this measurement is to determine whether a near-uniform cross-sectional temperature is obtained before the gas mixture gets into the retention chamber for effective destruction of combustible organics. Thermoelectric thermometry, resistance thermometry, radiation and optical pyrometry, or other techniques in flame research can be used in the on-site temperature measurement. This step would take 1 month and cost $6,000. If it is found that the cross-sectional temperature variation is great in the retention chamber, the next step should be taken.

7.2.1.2.2 Selection of burner and mixing devices--The purpose of this step is to select the combination of burner and mixing devices which will provide good mixing between flame and inlet gas to provide near-plug-flow conditions at the entrance to the retention section of the incinerator. Either a cold air or water model can be used to test these devices. Such a model can be set up in the laboratory for a small fraction of the cost of constructing a complete incinerator for testing. It can be built of sheet metal or wood, although plexiglas is much to be preferred, since it allows visual probing and observation with smoke tracers and dyes. Mixing effects can be studied while blending warm air or water into room temperature air or water.

Sensitive laboratory-type thermocouples and pitot tubes must be used with an air model to obtain satisfactory traverse readings of temperature and velocity distribution. In preserving the scale validity between an air model and a full-scale incinerator, corrections should be made to account for the difference in density of the model and the prototype. A method for this correction is mentioned in Reference 19, based on the relative momentum of the stream being considered.

It would take about 6 months to complete this project, at a cost of $20,000.

7.2.1.2.3 Full-scale demonstration--After identifying the best combination of burner and mixing devices, full-scale devices should be purchased (or fabricated) and used to replace the corresponding section in one of the existing incineration units. The new system, with the improved burning and mixing section should then be tested to determine which operating conditions will achieve 99% removal of PAN and MAN. The estimated cost and time involved are $100,000 and 12 months, respectively.

7.2.2 Wet Scrubber/MAN Recovery

There are essentially two processes included in this control system. The wet scrubber process actually removes pollutants from the condenser off-gas, whereas the MAN recovery process is used as a means of waste disposal to eliminate secondary pollution problems resulting from operation of the wet scrubber. Because a MAN recovery process has been in operation since 1971 and another new unit has been recently installed, a demonstration program for this process is not needed. The demonstration program for this system therefore involves pilot-scale testing and full-scale operation of the three-stage scrubber described in Section 5.3.2.

7.2.2.1 Pilot-Scale Testing of Improved Scrubber--
This includes design, construction, and testing of the three-stage, pilot-scale wet scrubber to determine the water recirculation rate for each stage and other operating conditions of the scrubber that would be required to obtain greater than 99% removal of PAN and MAN. This pilot-scale scrubber should be designed to operate at a gas flow rate of about 30 m^3/min (1,000 scfm). After the pilot unit has been tested, data will be taken for further scale up to full-scale units. The time needed for completing the project is estimated to be 18 months. The cost of the project would be about $120,000, including $85,000 of capital cost.

7.2.2.2 Full-Scale Demonstration of Scrubber--
This phase of the demonstration program includes the design of a full-scale unit by using pilot-scale test results, construction, and start up of the improved wet scrubber. Again, tests should be performed to verify that over 99% removal of PAN and MAN is achieved. The cost associated with this project would be about $2,500,000, including $2,000,000 for equipment and installation costs. It would need 30 months to complete.

7.2.3 Carbon Adsorber/Waste Incineration

Due to the lack of data on carbon adsorption of this type of waste gas, laboratory tests would be necessary to determine the conditions for achieving greater than 99.1% removal efficiency by an activated carbon process alone. Laboratory tests are also needed to determine the steam rate for regeneration and the gas flow that is to be incinerated. There are two steps involved in the demonstration program for this system.

7.2.3.1 Laboratory-Scale Testing of Carbon Process--
A laboratory-scale carbon bed should be used to handle a gas flow of about 15 m^3/min (500 scfm). Operating parameters such as retentivity and steam rate would be determined. Enough data should be taken to determine the thickness of the carbon bed, linear gas velocity, type and particle size of carbon, and other design

factors for a full-scale carbon adsorption process. The possibility of forming polymer-like material on the carbon surface should also be evaluated, especially when the carbon bed is subjected to high temperature treatment during the regeneration cycle. The time and cost of this step are estimated to be 6 months and $25,000.

7.2.3.2 Full-Scale Operation of the System--
Based on the lab-scale test results, a full-scale carbon adsorption/incineration system should be designed and constructed at one of the PAN manufacturing plants for full-scale testing and demonstration. Particular care should be given to the incinerator unit. Although high efficiency of incineration is expected due to the small gas flow to be treated, the burning-mixing combination and incinerator configuration should be carefully selected. Operating conditions should be adjusted to obtain 99% combined removal efficiency for PAN and MAN. The project would take about 30 months, with a cost of $1,700,000.

REFERENCES

1. Serth, R. W., and T. W. Hughes. Source Assessment: Phthalic Anhydride. Contract 68-02-1874, U.S. Environmental Protection Agency, Research Triangle Park, North Carolina, 1976. 144 pp.

2. Anderson, E. V. Phthalic Anhydride Makers Foresee Shortage. Chemical and Engineering News, 53(26):10-11, 1975.

3. Phthalic Anhydride. Chemical Marketing Reporter, 207(1):9, 1974.

4. Bernardini, F., and M. Ramacci. Oxidation Mechanism of o-Xylene to Phthalic Anhydride. Ceimica e l'Industria (Milan), 48(1):9-17, 1966.

5. Spitz, P. H. Phthalic Anhydride Revisited. Hydrocarbon Processing, 47(11):162-168, 1968.

6. Schwab, R. F., and W. H. Doyle. Hazards in Phthalic Anhydride Plants. Chemical Engineering Progress, 66(9):49-53, 1970.

7. Ioffe, I. I., et al. Kinetics and Vapor Phase Oxidation Mechanism of Aromatic Hydrocarbons, VI. Zhurnal Fizicheskoi Khimii (Journal of Physical Chemistry), 29(4):692-698, 1955.

8. Graham, J. J., P. F. Way, and S. Chase. Phthalic Anhydride by Fluid Bed Process. Chemical Engineering Progress, 58(1):96-100, 1962.

9. Graham, J. J. The Fluidized Bed Phthalic Anhydride Process. Chemical Engineering Progress, 66(9):54-58, 1970.

10. Personal communication with L. B. Evans, U.S. Environmental Protection Agency, Research Triangle Park, North Carolina (data originally supplied by Stepan Chemical Company), 12 June 1975.

11. Personal communication with A. B. Netzley, Air Pollution Control District, County of Los Angeles, 28 March 1975.

12. Schwartz, W. A., et al. Engineering and Cost Study of Air Pollution Control for the Petrochemical Industry, Volume 7: Phthalic Anhydride Manufacture from Ortho-Xylene. EPA-450/3-73-006g, U.S. Environmantal Protection Agency, Research Triangle Park, North Carolina, 1975. 108 pp.

13. Personal communication with H. M. Lacy, Monsanto Company, Texas City, Texas, 7 April 1975.

14. Personal communication with T. Brennan, Bay Area Air Pollution Control District, San Francisco, California, 23 June 1976.

15. Personal communication with L. B. Evans, U.S. Environmental Protection Agency, Research Triangle Park, North Carolina (data originally supplied by Koppers Company), 12 June 1975.

16. Personal communication with M. A. Pierle, Monsanto Company, St. Louis, Missouri, April 1976.

17. Ross, R. D. Pollution Abatement: Incineration of Solvent-Air Mixtures. Chemical Engineering Progress, 68(8):59-64, 1972.

18. JANAF Thermochemical Tables, Second Edition. NSRDS-NBS 37, U.S. Department of Commerce, National Bureau of Standards, Washington, D.C., June 1971. 1141 pp.

19. Rolke, R. W., et al. Afterburner Systems Study. EPA-R2-72-062, U.S. Environmental Protection Agency, Research Triangle Park, North Carolina, 1972. 336 pp.

20. Personal communication with L. B. Evans, U.S. Environmental Protection Agency, Research Triangle Park, North Carolina (data originally supplied by Monsanto Company), 12 June 1975.

21. Moores, C. W. Control PA Emissions. Hydrocarbon Processing, 54(10):100-103, 1975.

22. Fawcett, R. L. Air Pollution Potential of Phthalic Anhydride Manufacture. Journal of the Air Pollution Control Association, 20(7):46]-465, 1970.

23. Ferrari, D. C., and C. G. Bertram. Method and Apparatus for Removal of Organic from Chemical Waste Gases. U.S. Patent 3,624,984 (to the Badger Company), December 7, 1971.

24. Personal communication with R. A. Mount, Monsanto Company, St. Louis, Missouri, 3 June 1976.

25. Yevzel'man, I. B., and G. D. Kharlampovish. Neutralization of Exhaust Gas from Phthalic Anhydride Production. Khimicheskaya Promyshlennost (Moscow), 49(6):379-380, 1973.

26. Weyens, E. Recover Maleic Anhydride. Hydrocarbon Processing, 53(11):132-134, 1974.

27. Personal communication with A. David, UCB S.A., Brussells, Belgium, 21 May 1976.

28. Wirth, F. Recover MA from PA Scrubber Water. Hydrocarbon Processing, 54(8):107-108, 1975.

29. Personal communication with I. V. Heese, BASF A.G., Ludwigshafen, Germany, 11 June 1976.

30. Personal communication with R. T. Wedell, Koppers Company, Inc., Chicago, Illinois, 5 October 1976.

31. Development Document for Interim Final Effluent Limitations Guidelines and New Source Performance Standards for the Significant Organic Products Segment of the Organic Chemical Manufacturing Point Source Category. EPA-440/1-72/045, U.S. Environmental Protection Agency, Washington, D.C., 1975. 361 pp.

32. Kohl, A. L., and F. C. Riesenfeld. Gas Purification. McGraw-Hill Book Company, Inc., New York, New York, 1960. Page 428.

33. Personal communication with E. D. Kennedy, Monsanto Enviro-Chem Systems, Inc., St. Louis, Missouri, 8 June 1976.

34. Phthalic Anhydride Process, CHAUNY. Rhone-Poulenc S.A., Neuilly sur Seine, France, 1976. 17 pp.

35. Personal communication with J. C. Zimmer, Rhone-Poulenc S.A., Neuilly sur Seine, France, 13 May 1976.

36. Personal communication with J. C. Zimmer, Rhone-Poulenc S.A., Neuilly sur Seine, France, 1 July 1976.

37. Chemical Marketing Reporter. 210(21):50, 1976.

38. Zimmer, J. C. New Phthalic Anhydride Process. Hydrocarbon Processing, 53(2):111-112, 1974.

APPENDIX A

MATERIAL BALANCE FOR EXISTING, IMPROVED, AND NEW CONTROL SYSTEMS

TABLE A-1. OVERALL MATERIAL BALANCE FOR A TYPICAL EXISTING THERMAL INCINERATOR/STEAM GENERATION SYSTEM

(moles/hr)

Incineration temperature: 700°C
Stack gas temperature: 280°C

Component	Process vent gas	Natural gas	Stack gas
Sulfur oxides	533		533
Carbon monoxide	39,139		1,962
Carbon dioxide	86,014		265,084
Phthalic anhydride	1,130		57
Maleic anhydride	3,218		161
Benzoic acid	167		8
Water	352,172		694,032
Oxygen	1,025,597		571,607
Nitrogen	5,030,814		5,030,814
Methane		146,510	
Ethane		16,280	
Nitrogen oxides			197
Total	6,538,784	162,790	6,564,455

TABLE A-2. OVERALL MATERIAL BALANCE FOR A TYPICAL EXISTING THERMAL INCINERATOR/FEED GAS PREHEATING SYSTEM

(moles/hr)

Incineration temperature: 700°C
Preheated feed temperature: 480°C
Stack gas temperature: 370°C

Component	Process vent gas	Natural gas	Stack gas
Sulfur oxides	533		533
Carbon monoxide	39,139		1,957
Carbon dioxide	86,014		227,130
Phthalic anhydride	1,130		113
Maleic anhydride	3,218		322
Benzoic acid	167		17
Water	352,172		499,675
Oxygen	1,025,597		885,842
Nitrogen	5,030,814		5,030,814
Methane		66,480	
Ethane		7,825	
Nitrogen oxides			197
Total	6,538,784	74,305	6,646,600

TABLE A-3. OVERALL MATERIAL BALANCE FOR A TYPICAL EXISTING WET SCRUBBER/WASTE INCINERATION SYSTEM

(moles/hr)

Scrubber vent temperature: 38°C
Incinerator mixed gas temperature: 925°C

Component	Process vent gas	Scrubber vent	Scrubber purge liquor	Natural gas	Combustion air	Incinerator vent
Sulfur oxides	533	533	1,			
Carbon monoxide	39,139	39,139				
Carbon dioxide	86,014	86,014				62,630
Phthalic anhydride (or acid)	1,130	23	1,107			22
Maleic anhydride (or acid)	3,218	65	3,153			64
Benzoic acid	167	4	164			3
Water	352,172	536,000	214,400			276,850
Oxygen	1,025,597	1,025,597			91,000	12,340
Nitrogen	5,030,814	5,030,814			343,700	343,700
Methane				18,670		
Ethane				2,194		
Total	6,538,784	6,718,189	218,824	20,864	434,700	695,610

TABLE A-4. OVERALL MATERIAL BALANCE FOR AN IMPROVED THERMAL INCINERATOR/STEAM GENERATION SYSTEM (moles/hr)

Incineration temperature: 860°C
Stack gas temperature: 300°C

Component	Process vent gas	Natural gas	Stack gas
Sulfur oxides	533		533
Carbon monoxide	39,139		391
Carbon dioxide	86,014		314,252
Phthalic anhydride	1,130		11
Maleic anhydride	3,218		32
Benzoic acid	167		2
Water	352,172		787,900
Oxygen	1,025,597		579,496
Nitrogen	5,030,814		5,030,814
Methane		186,740	
Ethane		20,749	
Nitrogen oxides			225
Total	6,538,784	207,489	6,713,656

TABLE A-5. OVERALL MATERIAL BALANCE FOR AN IMPROVED WET SCRUBBER/WASTE INCINERATION SYSTEM

(moles/hr)

Number of scrubber stages: 3
Scrubber vent temperature: 38°C
Incinerator mixed gas temperature: 925°C

Component	Process vent gas	Scrubber vent	Scrubber purge liquor	Natural gas	Combustion air	Incinerator vent
Sulfur oxides	533	533				
Carbon monoxide	39,139	39,139				
Carbon dioxide	86,014	86,014				27,379
Phthalic anhydride (or acid)	1,130	10	1,120			1
Maleic anhydride (or acid)	3,218	28	3,190			3
Benzoic acid	167	1	166			
Water	352,172	536,000	79,011			97,863
Oxygen	1,025,597	1,025,597			33,633	5,606
Nitrogen	5,030,814	5,030,814			134,531	134,531
Methane				3,695		
Ethane				411		
TOTAL	6,538,784	6,718,136	83,487	4,106	168,164	265,383

TABLE A-6. OVERALL MATERIAL BALANCE FOR A NEW WET SCRUBBER/MAN RECOVERY SYSTEM

(moles/hr)

Number of scrubber stages: 3
Scrubber vent temperature: 38°C
MAN concentration in MAN recovery process feed: 20 wt%

Component	Process vent gas	Scrubber vent	Scrubber purge liquor	MAN product
Sulfur oxides	533	533		
Carbon monoxide	39,139	39,139		
Carbon dioxide	86,014	86,014		
Phthalic anhydride (or acid)	1,130	10	1,120	
Maleic anhydride (or acid)	3,218	28	3,190	3,028
Benzoic acid	167	1	166	
Water	352,172	536,000	79,011	
Oxygen	1,025,597	1,025,597		
Nitrogen	5,030,814	5,030,814		
Methane				
Ethane				
TOTAL	6,538,784	6,718,136	83,487	3,028

TABLE A-7. OVERALL MATERIAL BALANCE FOR A CARBON ADSORBER/WASTE INCINERATION SYSTEM

(moles/hr)

Steam rate: 15 lb steam/lb organics
Retentivity: 15%
Incinerator feed gas temperature: 315°C
Incinerator temperature: 925°C

Component	Process vent gas	Adsorber vent	Incinerator feed gas	Natural gas	Combustion air	Incinerator vent
Sulfur oxides	533	533				
Carbon monoxide	39,139	39,139				
Carbon dioxide	86,014	86,014				33,500
Phthalic anhydride	1,130	10	1,120			1
Maleic anhydride	3,219	28	3,190			3
Benzoic acid	167	1	166			
Water	352,172	352,172	415,083			441,313
Oxygen	1,025,597	1,025,597			43,830	7,305
Nitrogen	5,030,814	5,030,814			175,317	175,317
Methane				8,703		
Ethane				967		
TOTAL	6,538,784	6,718,136	419,599	9,670	219,147	657,439

APPENDIX B

COST MODEL AND ECONOMIC ASSUMPTIONS

Contained herein are the cost model and economic assumptions utilized in generating the detailed cost estimates presented in Apprendix C and summarized in Table 10.

1. COST MODEL

Items included in capital requirement calculations include: equipment cost, installation cost, taxes and insurance, start up cost, interest on construction capital, and working capital. Contingencies and land costs were excluded. Taxes and insurance were assumed to be 2% of installed equipment cost. Start up cost and working capital were each estimated to be 20% of annual operating cost. Interest on construction capital (11% total capital requirement) was calculated based on an annual 8% interest rate with the capital requirement split between engineering and design (10%) and plant investment (90%). Total construction time was assumed to be 3 years, with 1.5 years of engineering and design and 2.5 years of construction.

Calculation of capitalized cost assumed a 10% plant salvage value and an annual 8% interest rate. Plant lifetime was assumed to be 10 years for all options except the activated sludge process (20 years) and the Rhone-Poulenc manufacturing process (5 years). Items covered in the operating cost calculation include: labor, raw materials, utilities, maintenance, overhead, taxes and insurance, depreciation, annual interest charge, and byproduct credit. Labor cost was assumed to be $5/hr. Fuel cost was assumed to be $0.60/ 10^6 Btu. Electricity cost was assumed to be 2¢/kW hr. Maintenance charges ranged from 3% to 5% of installed equipment cost, with 4% assumed if not otherwise specified. Plant overhead was assumed to be 90% of operating labor cost. As in the capital cost estimate, taxes and insurance were assumed to be 2% of installed equipment cost. Depreciation was assumed to be 10% of installed equipment cost for all options except the activated sludge process (5%) and the Rhone-Poulenc manufacturing process (20%). The annual interest charge was calculated assuming 75% equity financing requiring 15% return on investment and 25% financing requiring 8% return on investment.

2. SPECIFIC PROCESS ASSUMPTIONS

Following is a list of the additional assumptions required for each specific process not listed above or in the text.

Specific Process Assumptions

- Incineration/Waste Heat Boiler
  - Maintenance, 4% installed equipment cost
  - Boiler feed water, 40¢/10^3 gal
  - Byproduct steam credit, 75¢/10^3 lb
  - Lifetime, 10 years
  - Depreciation, 10% installed equipment cost

- Incineration/Heat Exchanger
  - Maintenance, 5% installed equipment cost
  - Lifetime, 10 years
  - Depreciation, 10% installed equipment cost

- Wet Scrubber
  - Maintenance, 5% installed equipment cost
  - Process water, 10¢/10^3 gal
  - Lifetime, 10 years
  - Depreciation, 10% installed equipment cost

- Maelic Anhydride Recovery Process
  - Maintenance, 3% battery limits installed equipment cost
  - Battery limits, 71% total installed equipment cost
  - Cooling water, 2¢/10^3 gal
  - Deionized water, \$1.89/10^3 gal
  - Steam, 75¢/10^3 lb
  - Lifetime, 10 years
  - Depreciation, 10% installed equipment cost
  - Maleic anhydride byproduct credit \$0.30/lb

- Carbon Adsorption Process
  - Installation cost is 40% of equipment cost
  - Maintenance, 4% of installed equipment cost
  - Lifetime, 10 years
  - Depreciation, 10% installed equipment cost

- CHAUNY Manufacturing Process
  - Outside battery limits installed equipment cost assumed to be 1/3 battery limits installed equipment cost
  - Raw materials and catalysts, \$100/metric ton product
  - Byproduct steam credit, 75¢/10^3 lb
  - Maintenance, 3% battery limits installed equipment cost
  - Lifetime, 5 years
  - Depreciation, 20% installed equipment cost

- Conventional Phthalic Anhydride Manufacture
    - Only emission control cost included is for storage tanks
    - Maintenance, 5% installed equipment cost
    - Raw materials, o-xylene, SO_2 - 7.4¢/lb product
    - Utilities including catalyst, 0.4¢/lb product
    - Lifetime, 10 years
    - Depreciation, 10% installed equipment cost

APPENDIX C

DETAILED ESTIMATES OF CAPITAL, CAPITALIZED, AND OPERATING COSTS

Tables C-1a through C-9b give detailed estimates of capital and operating costs for existing and candidate add-on control systems, and for the conventional PAN manufacturing process and the CHAUNY PAN process. The capitalized costs can be obtained by using the following formula:

$$K = C_v + \frac{C_r}{(1+i)^{n-1}} \qquad \text{(C-1)}$$

where K = the capitalized cost
C_v = original installed cost of equipment
C_r = equipment replacement cost
i = annual interest rate
n = equipment life, years

Cost estimates given in Tables C-1a through C-9b are all for PAN plants with a production capacity of 59,000 metric tons/yr.

TABLE C-1a. CAPITAL COST OF A TYPICAL EXISTING THERMAL INCINERATOR/STEAM GENERATION SYSTEM

Direct cost		
Equipment cost		$ 871,900
Installation cost		871,900
Total direct construction cost		1,743,800
Indirect cost		
Design and Engineering fees	Included in the installation cost	
Indirect labor costs	Included in the installation cost	
Contingency	Included in the installation cost	
Taxes and insurance		34,900
Total indirect construction cost		34,900
Startup cost		155,200
Interest on construction capital		250,700
Working capital		155,200
Total capital requirement		$2,339,800

TABLE C-1b. OPERATING COST OF A TYPICAL EXISTING THERMAL INCINERATOR/STEAM GENERATION SYSTEM

Labor	$ 21,000
Maintenance materials	69,800
Utilities	
Process water	45.600
Fuel	843,500
Total utilities	889,100
Plant overhead	18,900
Taxes and insurance	34,900
Depreciation	174,400
Interest	159,100
Total operating cost (per year)	1,367,200
Byproduct credit	591,100
Net operating cost (per year)	$ 776,100

TABLE C-2a. CAPITAL COST OF A TYPICAL EXISTING THERMAL INCINERATOR/FEED GAS PREHEATING SYSTEM

Direct cost		
Equipment cost		$ 802,200
Installation cost		397,600
Total direct construction cost		1,199,800
Indirect cost		
Design and engineering fees	Included in the installation cost	
Indirect labor costs	Included in the installation cost	
Contingency	Included in the installation cost	
Taxes and insurance		24,000
Total indirect construction cost		24,000
Startup cost		110,000
Interest on construction capital		173,300
Working capital		110,000
Total capital requirement		$1,617,100

TABLE C-2b. OPERATING COST OF A TYPICAL EXISTING THERMAL INCINERATOR/FEED GAS PREHEATING SYSTEM

Labor	$ 5,200
Maintenance materials	48,000
Utilities	
Electricity	39,600
Fuel	198,300
Total utilities	237,900
Plant overhead	4,700
Taxes and insurance	24,000
Depreciation	120,000
Interest	110,000
Total operating cost (per year)	$549,900

TABLE C-3a. CAPITAL COST OF A TYPICAL EXISTING WET SCRUBBER/WASTE INCINERATION SYSTEM

Direct cost		
Equipment cost		$ 551,000
Installation cost		1,471,800
Total direct construction cost		2,022,800
Indirect cost		
Design and engineering fees	Included in the installation cost	
Indirect labor costs	Included in the installation cost	
Contingency	Included in the installation cost	
Taxes and insurance		40,500
Total indirect construction cost		40,500
Startup cost		129,200
Interest on construction capital		278,600
Working capital		129,200
Total capital requirement		$2,600,400

TABLE C-3b. OPERATING COST OF A TYPICAL EXISTING WET SCRUBBER/WASTE INCINERATION SYSTEM

Labor	$ 11,900
Maintenance materials	125,500
Utilities	
Process water	1,100
Electricity	45,000
Fuel	83,300
Total utilities	129,400
Plant overhead	10,700
Taxes and insurance	40,500
Depreciation	202,300
Interest	174,500
Total operating cost (per year)	$694,800

TABLE C-4a. CAPITAL COST OF AN IMPROVED THERMAL INCINERATOR/STEAM GENERATION SYSTEM

Direct cost		
Equipment cost		$ 871,900
Installation cost		871,900
Total direct construction cost		1,743,800
Indirect cost		
Design and engineering fees	Included in the installation cost	
Indirect labor costs	Included in the installation cost	
Contingency	Included in the installation cost	
Taxes and insurance		34,900
Total indirect construction cost		34,900
Startup cost		184,300
Interest on construction capital		257,700
Working capital		184,300
Total capital requirement		$2,405,000

TABLE C-4b. OPERATING COST OF AN IMPROVED THERMAL INCINERATOR/STEAM GENERATION SYSTEM

Labor	$ 21,000
Maintenance materials	69,800
Utilities	
Process water	45,600
Fuel	983,200
Total utilities	1,028,800
Plant overhead	18,900
Taxes and insurance	34,900
Depreciation	174,400
Interest	164,900
Total operating cost (per year)	1,512,700
Byproduct credit	591,100
Net operating cost (per year)	$ 921,600

TABLE C-5a. CAPITAL COST OF AN IMPROVED WET SCRUBBER/ WASTE INCINERATION SYSTEM

Direct cost		
Equipment cost		$ 596,800
Installation cost		1,696,100
Total direct construction cost		2,292,900
Indirect cost		
Design and engineering fees	Included in the installation cost	
Indirect labor costs	Included in the installation cost	
Contingency	Included in the installation cost	
Taxes and insurance		45,900
Total indirect construction cost		45,900
Startup cost		140,900
Interest on construction capital		314,500
Working capital		140,900
Total capital requirement		$2,935,100

TABLE C-5b. OPERATING COST OF AN IMPROVED WET SCRUBBER/WASTE INCINERATION SYSTEM

Labor	$ 11,900
Maintenance materials	127,400
Utilities	
Process water	1,100
Electricity	59,300
Fuel	19,700
Total utilities	80,100
Plant overhead	10,700
Taxes and insurance	45,900
Depreciation	229,300
Interest	198,900
Total operating cost (per year)	$704,200

TABLE C-6a. CAPITAL COST OF A NEW WET SCRUBBER/ MAN RECOVERY SYSTEM

Direct cost		
Major equipment cost		$4,068,100
Other materials cost		
Installation cost		
Total direct construction cost		4,068,100
Indirect cost		
Design and engineering fees	Included in the installation cost	
Indirect labor cost		
Contingency		
Taxes and insurance		81,400
Total indirect construction cost		81,400
Startup cost		244,700
Interest on construction capital		556,700
Working capital		244,700
Total capital requirement		$5,195,600

TABLE C-6b. OPERATING COST OF A NEW WET SCRUBBER/ MAN RECOVERY SYSTEM

Labor	$ 46,700
Maintenance materials	145,400
Utilities	
Process water	7,700
Demineralized water	13,200
Electricity	68,100
Steam	64,100
Total utilities	153,100
Plant overhead	42,000
Taxes and insurance	81,400
Depreciation	406,800
Interest	347,800
Total operating cost (per year)	1,223,200
Byproduct credit	1,735,800
Net operating cost (per year)	$ -512,600

TABLE C-7a. CAPITAL COST OF A NEW CARBON ADSORBER/ WASTE INCINERATION SYSTEM

Direct cost		
Equipment cost		$ 850,900
Installation cost		390,100
Total direct construction cost		1,241,000
Indirect cost		
Design and engineering fees	Included in the installation cost	
Indirect labor cost		
Contingency		
Taxes and insurance		24,800
Total indirect construction cost		24,800
Startup cost		78,700
Interest on construction capital		170,700
Working capital		78,700
Total capital requirement		$1,593,900

TABLE C-7b. OPERATING COST OF A NEW CARBON ADSORBER/ WASTE INCINERATION SYSTEM

Labor	$ 11,900
Materials	
Operating	11,200
Maintenance	60,400
Total materials	71,600
Utilities	
Steam	7,200
Electricity	11,800
Fuel	24,200
Total utilities	43,200
Plant overhead	10,700
Taxes and insurance	24,800
Depreciation	124,100
Interest	106,900
Total operating cost (per year)	$393,200

TABLE C-8a. CAPITAL COST OF A TYPICAL EXISTING o-XYLENE BASED PAN MANUFACTURING PLANT

Direct cost		
Major equipment		
Other materials		$ 8,593,500
Installation cost		
Total direct plant construction cost		8,593,500
Indirect cost		
Design and engineering fees	Included in the installation cost	
Indirect labor cost		
Contingency		
Taxes and insurance		171,900
Total indirect plant construction cost		171,900
Startup cost		2,573,900
Interest on construction capital		1,669,600
Working capital		2,573,900
Total capital requirement		$15,582,800

TABLE C-8b. OPERATING COST OF A TYPICAL EXISTING o-XYLENE BASED PAN MANUFACTURING PLANT

Labor	$ 153,600
Materials	
Raw and process	9,584,000
Maintenance	429,700
Total materials	10,013,200
Utilities	389,200
Plant overhead	138,200
Taxes and insurance	171,900
Depreciation	859,300
Interest	1,143,600
Total operating cost (per year)	$12,869,500

TABLE C-9a. CAPITAL COST OF THE CHAUNY PAN MANUFACTURING PROCESS

Capacity: 59,000 metric tons/yr

Direct cost	
Installed major equipment	$ 7,500,000
Installed other materials	2,500,000
Total direct plant construction cost	10,000,000
Indirect cost	
Design and engineering fees } Included in the installation cost	
Indirect labor cost } Included in the installation cost	
Contingency } Included in the installation cost	
Taxes and insurance	200,000
Total indirect plant construction cost	200,000
Startup cost	2,386,400
Interest on construction capital	1,796,700
Working capital	2,386,400
Total capital requirement	$16,769,600

TABLE C-9b. OPERATING COST OF THE CHAUNY PAN MANUFACTURING PROCESS

Capacity: 59,000 metric tons/yr

Labor	
Operating }	$ 979,600
Maintenance }	
Overhead }	
Total labor	979,600
Materials	
Raw and process }	7,738,700
Maintenance }	
Total materials	7,738,700
Taxes and insurance	200,000
Depreciation	2,000,000
Interest	1,209,800
Total operating cost (per year)	$12,128,100

TECHNICAL REPORT DATA
(Please read Instructions on the reverse before completing)

1. REPORT NO. EPA-600/2-77-188	2.	3. RECIPIENT'S ACCESSION NO.
4. TITLE AND SUBTITLE Phthalic Anhydride Plant Air Pollution Control		5. REPORT DATE September 1977
		6. PERFORMING ORGANIZATION CODE
7. AUTHOR(S) C. T. Chi and T. W. Hughes		8. PERFORMING ORGANIZATION REPORT NO. MRC-DA-586
9. PERFORMING ORGANIZATION NAME AND ADDRESS Monsanto Research Corporation, Station B, Box 8, Dayton, Ohio 45407		10. PROGRAM ELEMENT NO. 1AB015; ROAP 21AXM-011
		11. CONTRACT/GRANT NO. 68-02-1320, Task 25
12. SPONSORING AGENCY NAME AND ADDRESS EPA, Office of Research and Development, Industrial Environmental Research Laboratory, Research Triangle Park, NC 27711		13. TYPE OF REPORT AND PERIOD COVERED Task Final; 4/76-12/76
		14. SPONSORING AGENCY CODE EPA/600/13

15. SUPPLEMENTARY NOTES Task officer E. J. Wooldridge is no longer with IERL-RTP; contact I. A. Jefcoat, Mail Drop 62, 919/541-2547.

16. ABSTRACT The report summarizes a technical and economic evaluation of add-on control systems and process modifications for reducing, by 99%, the emissions of phthalic and maleic anhydrides from the main process vent gas in phthalic anhydride manufacturing plants. A survey was made to identify present (1976) control practices and their control efficiencies in the phthalic anhydride industry. Based on theoretical and practical considerations, existing control technology alternatives were evaluated to determine whether they can be improved to obtain the desired control efficiency. Technical evaluation of these alternatives led to identification of candidate alternatives which apply to the manufacturing process, and which can achieve 99% overall removal efficiency for phthalic and maleic anhydrides. Design and operating parameters for achieving the desired control efficiency were also determined. Cost estimates and an energy utilization study were performed for the candidate alternatives. Demonstration programs are recommended for the most promising alternatives.

17. KEY WORDS AND DOCUMENT ANALYSIS

a. DESCRIPTORS		b. IDENTIFIERS/OPEN ENDED TERMS	c. COSATI Field/Group	
Air Pollution	Scrubbers	Air Pollution Control	13B	07A
Phthalic Anhydride	Assessments	Stationary Sources	07C	14B
Maleic Anhydride		Source Assessment		
Incinerators				
Carbon			07B	
Adsorption				

18. DISTRIBUTION STATEMENT Unlimited	19. SECURITY CLASS *(This Report)* Unclassified	21. NO. OF PAGES 113
	20. SECURITY CLASS *(This page)* Unclassified	22. PRICE

EPA Form 2220-1 (9-73)