United States
Environmental Protection
Agency

Industrial Environmental Research
Laboratory
Research Triangle Park NC 27711

EPA-600/7-78-088
June 1978

EPA

# Fuel Gas Environmental Impact: Final Report

## Interagency Energy/Environment R&D Program Report

## RESEARCH REPORTING SERIES

Research reports of the Office of Research and Development, U.S. Environmental Protection Agency, have been grouped into nine series. These nine broad categories were established to facilitate further development and application of environmental technology. Elimination of traditional grouping was consciously planned to foster technology transfer and a maximum interface in related fields. The nine series are:

1. Environmental Health Effects Research
2. Environmental Protection Technology
3. Ecological Research
4. Environmental Monitoring
5. Socioeconomic Environmental Studies
6. Scientific and Technical Assessment Reports (STAR)
7. Interagency Energy-Environment Research and Development
8. "Special" Reports
9. Miscellaneous Reports

This report has been assigned to the ENVIRONMENTAL PROTECTION TECHNOLOGY series. This series describes research performed to develop and demonstrate instrumentation, equipment, and methodology to repair or prevent environmental degradation from point and non-point sources of pollution. This work provides the new or improved technology required for the control and treatment of pollution sources to meet environmental quality standards.

## REVIEW NOTICE

This report has been reviewed by the U.S. Environmental Protection Agency, and approved for publication. Approval does not signify that the contents necessarily reflect the views and policy of the Agency, nor does mention of trade names or commercial products constitute endorsement or recommendation for use.

This document is available to the public through the National Technical Information Service, Springfield, Virginia 22161.

EPA-600/7-78-088
June 1978

# Fuel Gas Environmental Impact: Final Report

by

F.L. Robson (UTRC), W.A. Blecher (UTRC), and V.B. May (Hittman Associates)

United Technologies Research Center
Silver Lane
East Hartford, Connecticut 06108

Contract No. 68-02-2179
Program Element No. EHE623A

EPA Project Officer: Thomas W. Petrie

Industrial Environmental Research Laboratory
Office of Energy, Minerals, and Industry
Research Triangle Park, NC 27711

Prepared for

U.S. ENVIRONMENTAL PROTECTION AGENCY
Office of Research and Development
Washington, DC 20460

ABSTRACT

United Technologies Research Center continues to demonstrate the potential environmental and economic benefits of integrated coal gasification/gas cleanup/combined gas and steam cycle power plants. Several technical problem areas requiring investigation or further definition were left over from UTRC's work on EPA Contract No. 68-02-1099, reported in EPA-600/2-76-153 (June 1976). Refinements in plant operational characteristics lower heat rates and reduce emissions from previous values. An expanded study of plant environmental intrusions includes a look at potentially hazardous trace elements. Comparisons made of integrated plants using air-blown and oxygen-blown gasifiers favor air-blown operation. Careful theoretical design of plants with low temperature sulfur cleanup reduces to marginal levels the performance and cost advantages of plants with high temperature cleanup. If gasifier steam feed rates are kept low in all but fixed bed types, choice of gasifier among other major generic types is not critical to achieving attractive systems using low temperature cleanup. Excessive thermal $NO_x$ emissions may be avoided by departing from conventional combustor designs. Fuel $NO_x$ and particulates remain as unsolved problems with use of high temperature cleanup. Sulfur removal to very low levels is possible with integrated systems, but cost rises rapidly as it becomes necessary to remove most of the COS as well as the $H_2S$.

Fuel Gas Environmental Impact

TABLE OF CONTENTS

Abstract . . . . . ii

Figures . . . . . v

Tables . . . . . ix

Conversion Factors . . . . . xiv

Acknowledgment . . . . . xv

1. Summary . . . . . 1
   - Introduction . . . . . 1
   - Power Plant Components . . . . . 3
   - Overall Power Plant . . . . . 13
   - References . . . . . 23

2. Introduction . . . . . 24
   - References . . . . . 27

3. Conclusions . . . . . 28

4. Recommendations for Further Work . . . . . 30

5. Overview of Gasification and Cleanup Processes. . . . . 31
   for Use with Combined-Cycle Power Plants
   - Introduction . . . . . 31
   - Gasification . . . . . 33
   - Cleanup Systems . . . . . 40
   - References . . . . . 54

6. Detailed Description of Selected Gasification . . . . . 56
   and Cleanup Processes
   - Introduction . . . . . 56
   - Selection of Processes . . . . . 56
   - Gasification Process Description . . . . . 63
   - Desulfurization Process Descriptions . . . . . 78
   - References . . . . . 89

7. Combined Cycle Power Generation Systems . . . . . 90
   - Introduction . . . . . 90
   - General Parametric Analyses . . . . . 92

TABLE OF CONTENTS (Cont'd)

8. Integration Studies . . . . . 100
Introduction . . . . . 100
Thermal Integration . . . . . 101
Selexol Operation . . . . . 106
Steam to Coal Feed Ratio . . . . . 114
Air-Blown BCR Gasifiers . . . . . 116
Parametric Studies of the U-Gas/Conoco System . . . . . 127
Gasifier Modeling . . . . . 127
References . . . . . 134

9. Power System Emissions . . . . . 135
Introduction . . . . . 135
Definition for Goals of Cleanup Systems . . . . . 137
Sulfur Emissions . . . . . 140
Nitrogen Oxides . . . . . 144
Particulates . . . . . 177
References . . . . . 180

10. Other Environmental Intrusions . . . . . 183
Introduction . . . . . 183
Wastes from Coal Preparation and Handling . . . . . 186
Wastes from Gasification, Cleanup and Gas Utilization . 194
Residuals . . . . . 209
Trace Elements . . . . . 210
References . . . . . 229

11. Performance and Cost of Integrated Systems . . . . . 231
Introduction . . . . . 231
Performance . . . . . 231
System Cost Estimates . . . . . 284
References . . . . . 291

Appendices

A. Water Treatment and Reuse . . . . . 292

B. Fuel Processing Cost Basis . . . . . 331

C. Powerplant Cost Analysis . . . . . 338

## LIST OF FIGURES


| Fig. | Title | Page No. |
|---|---|---|
| 1-1 | Typical Present-Day Waste-Heat Combined Gas and Steam Turbine System | 2 |
| 1-2 | BCR Entrained-Flow Gasifier | 5 |
| 1-3 | Selexol Low-Temperature Desulfurization | 10 |
| 1-4 | Conoco High-Temperatute Desulfurization | 11 |
| 1-5 | BCR/Selexol System | 15 |
| 1-6 | Potential Pre-Mix Combustor Layout | 20 |
| 5-1 | Basic Gasification Coal Combined Cycle Power System | 32 |
| 5-2 | General Fuel Processing Schematic | 34 |
| 5-3 | Typical Low-Temperature Acid Gas Removal Unit | 43 |
| 6-1 | Integrated Low-Temperature Cleanup System | 60 |
| 6-2 | Ash-Agglomerating Gasifier | 65 |
| 6-3 | BCR Entrained-Flow Gasifier | 68 |
| 6-4 | Low-Btu Molten Salt Coal Gasification Process | 71 |
| 6-5 | Gasification and Gas Cleanup | 75 |
| 6-6 | Ash Removal and Salt Recovery Section | 77 |
| 6-7 | Typical Flow Diagram-Selexol Acid Gas Removal Process | 79 |
| 6-8 | Conoco Process Block Diagram | 81 |
| 6-9 | Conoco High-Temperature Desulfurization | 82 |
| 6-10 | Claus Sulfur Recovery Process | 86 |
| 6-11 | Beavon Tailgas Cleanup Process | 88 |
| 7-1 | Waste-Heat Combined Gas and Steam Turbine System | 91 |
| 7-2 | Open Cycle Gas-Turbine Engine Performance Trade-off Curves | 93 |

LIST OF FIGURES


| Fig. | Title | Page No. |
|---|---|---|
| 7-3 | Trends for Combined-Cycle Systems | 95 |
| 7-4 | HTTTP Gas Turbine Parametric Study | 96 |
| 7-5 | Effect of Changes in Pressure Ratio | 98 |
| 7-6 | Results of Steam Cycle Parametric Study | 99 |
| 8-1 | Typical T-Q Diagram for Waste Heat Boiler | 103 |
| 8-2 | Effect of Fuel Temperature | 105 |
| 8-3 | Capital Equivalent of Heat Rate Improvement | 107 |
| 8-4 | Bumines/Selexol System with Fuel Gas Resaturation | 118 |
| 8-5 | Effect of Water Vapor in Fuel Gas Bumines-Selexol System | 119 |
| 8-6 | Equilibrium Constant for $H_2S$ Absorption by Half - Calcined Dolomite | 123 |
| 8-7 | Equilibrium Constant for COS Absorption by Half - Calcined Dolomite | 124 |
| 8-8 | Dissociation Pressure for Calcium Carbonate | 125 |
| 8-9 | Sulfur Absorption by Half Calcined Dolomite | 126 |
| 8-10 | U-Gas Gasifier Equilibrium Composition at 2010R | 128 |
| 8-11 | High-Temperature Cleanup System Performance | 129 |
| 9-1 | Effect of Particle Size on Engine Lifetime | 141 |
| 9-2 | $NO_x$ Production from Combustors Burning Low-Btu and Medium-Btu Gas | 147 |
| 9-3 | Nitric Oxide Formation in Gas Turbine Burner | 149 |
| 9-4 | Concentration-Time Profiles for Premixed $H_2$-CO-Air Mixture | 151 |
| 9-5 | NO Rate Parameter as a Function of Temperature | 153 |
| 9-6 | Equilibrium Combustion Products Low Btu Gas 144 Btu/SCF | 154 |

LIST OF FIGURES


| Fig. | Title | Page No. |
|---|---|---|
| 9-7 | Equilibrium NO Concentration Molten Salt Gasifier Fuel | 155 |
| 9-8 | Adiabatic Flame Temperature Molten Salt Gasifier Fuel | 156 |
| 9-9 | Comparison of Conventional Combustor $NO_x$ - Equivalence Ratio Relationship with that of a Well-Stirred Reactor | 157 |
| 9-10 | Reduction in $NO_x$ Emission by Reduction in Residence Time - Information Based on Experimental Data | 159 |
| 9-11 | FT4 Premix Rig with External Mixing | 161 |
| 9-12 | Comparison of Rapid Quench and Premix $NO_x$ with Baseline | 162 |
| 9-13 | $NO_x$ Estimation for Premixed Combustion Based on Extended Zeldovich Mechanism | 164 |
| 9-14 | Schematic of Premix Concept Applied to a Combustor Dome | 165 |
| 9-15 | Diagrammatic Representation of Premix Combustor | 167 |
| 9-16 | Autoignition Characteristics-Residence Time in the Pressure Tube Due to Local Flow Recirculations is not Likely to Cause a Problem | 168 |
| 9-17 | Estimated Flashback Loop-Estimated Flashback Characteristics for the Premix Tube Combustor and Montebello Test are Shown | 170 |
| 9-18 | Calculated Stability Loop for Premixed Concept as Applied to an Annular Combustor with 2600°F CET | 172 |
| 9-19 | Residual Nitrogen Species as a Function of Equivalence Ratio and Residence Time | 174 |
| 9-20 | Optimization of the Initial Design Concept | 175 |
| 9-21 | Rich Burner Staging Characteristics | 176 |
| 9-22 | Extrapolated Fractional Efficiency of Particulate Removal Device | 179 |
| 10-1 | Coal Preparation and Handling | 187 |

LIST OF FIGURES


| Fig. | Title | Page No. |
|---|---|---|
| 10-2 | Particulates Emissions from Coal Preparation and Handling | 189 |
| 10-3 | Water Handling for Coal Preparation | 193 |
| 10-4 | Sources of Wastewater in a COGAS Power System | 196 |
| 10-5 | Schematic Representation of Waste Water Streams and Anticipated Treatment | 197 |
| 10-6 | Solid Wastes Exiting a Generalized Integrated Plant | 205 |
| 10-7 | Possible Distribution of Trace Elements | 219 |
| 11-1 | System Flow Diagram-U-Gas/Selexol | 235 |
| 11-2 | System Flow Diagram U-Gas/Low Steam/Selexol | 240 |
| 11-3 | System Flow Diagram BCR/Air-Blown/Selexol | 245 |
| 11-4 | System Flow Diagram BCR/Oxygen-Blown/Selexol | 250 |
| 11-5 | Molten Salt System Flow Diagram | 261 |
| 11-6 | System Flow Diagram U-Gas/Low Steam/Conoco | 267 |
| 11-7 | System Flow Diagram-BCR/Air-Blown/Conoco | 271 |
| 11-8 | System Flow Diagram-BCR/Oxygen-Blown/Conoco | 276 |
| A-1 | Combined Cycle-Power Plant-Water Treatment and Reuse | 293 |
| A-2 | Conventional Sour Water Stripping Process | 303 |
| A-3 | Two Stage All-Distillation Process | 304 |
| A-4 | Phosam-W Process for Ammonia Separation | 306 |
| A-5 | Sour Water Generation and Treatment | 308 |
| A-6 | Conventional Two-Bed Ion Exchange Process | 315 |
| A-7 | Boiler Feed Water Treatment Schemes | 316 |
| A-8 | Conventional Demineralizer and RO/Demineralizer Systems for Boiler Feedwater Treatment | 322 |
| A-9 | Sidestream Softening of Cooling Water | 329 |

TABLES


| Number | Title | Page |
|---|---|---|
| 1-1 | Gasifier Types Considered | 4 |
| 1-2 | Low Temperature Cleanup Processes | 8 |
| 1-3 | High Temperature Cleanup Processes | 9 |
| 1-4 | Power System Characteristics(1) | 14 |
| 1-5 | Summary of Power Plant Characteristics | 16 |
| 1-6 | Potential Fate of Trace Elements* | 22 |
| 5-1 | Comparison of Air- vs Oxygen-Blown Gasification | 37 |
| 5-2 | Low Temperature Cleanup Processes | 42 |
| 5-3 | High Temperature Cleanup Processes | 49 |
| 6-1 | Summary of Low Temperature Integrated Systems | 61 |
| 6-2 | Feed Coal Compostion | 64 |
| 6-3 | U-Gas Gasifier Effluent | 66 |
| 6-4 | Molten Carbonate Reactions | 72 |
| 6-5 | Molten Salt Gasifier Coal and Raw Gas Composition | 74 |
| 8-1 | BCR-Selexol Fuel Gas Regenerator Costs | 106 |
| 8-2 | Basic Selexol Designs | 109 |
| 8-3 | Selexol Utilities and Cost Summary Refrigerated Operation | 110 |
| 8-4 | Mol Balance for Ambient Temperature Selexol Design | 111 |
| 8-5 | Selexol Cost and Utilities Summary | 112 |
| 8-6 | Refrigerated vs Ambient Temperature Selexol Operation | 113 |
| 8-7 | Refrigerated vs Ambient Temperature Selexol Operation | 113 |
| 8-8 | Summary of Performance and Cost Refrigerated vs Ambient Temperature Selexol Operation | 115 |

TABLES


| Number | Title | Page |
|---|---|---|
| 8-9 | Effect of Steam Addition on Fuel Gas Chemical Heating Value | 117 |
| 8-10 | Comparison of BCR Data | 121 |
| 8-11 | Comparison of High vs Low Steam Performance | 130 |
| 8-12 | Gasifier Equilibrium Compositions | 132 |
| 8-13 | Molten Salt Gasifier Equilibrium Composition | 133 |
| 9-1 | Emission Summary | 136 |
| 9-2 | Comparison of Emission Standards | 138 |
| 9-3 | Gas Turbine Fuel Specifications | 139 |
| 9-4 | Suggested Low-Btu Fuel Gas Cleanup System Goals | 142 |
| 9-5 | Comparison of Selexol Designs | 145 |
| 9-6 | Theoretical Flame Temperatures | 148 |
| 9-7 | Characteristic Times for a Natural Gas Combustor | 160 |
| 9-8 | Particulate Loading in Gasifier Product Gases | 178 |
| 10-1 | Typical Composition of Illinois No. 6 Coal | 184 |
| 10-2 | Typical Form in Which Trace and Minor Elements Occur in Coal | 185 |
| 10-3 | Coal-Pile Runoff Analysis at Selected Plants | 192 |
| 10-4 | By-Product Water Analysis from Synthane Gasification of Various Coals | 198 |
| 10-5 | Gasification Wastewater - Estimated Composition | 199 |
| 10-6 | Cooling Tower Blowdown Characteristics | 201 |
| 10-7 | Summary of Solids Exiting the BCR and IGT Combined Cycles | 206 |
| 10-8 | Description of Slag and Salt Slurry Exiting the Molten Salt Gasifier | 207 |
| 10-9 | Constituents of Coal Ash | 208 |

TABLES


| Number | Title | Page |
|---|---|---|
| 10-10 | Minimum Acute Toxicity Effluent and Estimated Permissible Concentration Values for Air and Water | 212 |
| 10-11 | Environmental Methodology for Ranking Trace Elements in Air and Water | 214 |
| 10-12 | Environmental Ranking of Trace Elements in Air and Water-Land | 215 |
| 10-13 | Trace Element Distribution Illinois No. 6 Coal | 217 |
| 10-14 | Modified Environmental Ranking of Trace Elements in Air and Water-Land | 218 |
| 10-15 | Formation of Trace Element Compounds | 221 |
| 10-16 | Predicted Volatilities of Trace Elements | 222 |
| 10-17 | Retention of Trace Elements in Gasifier Ash | 223 |
| 10-18 | Content of Leachate from Gasifier Ash (Montana Rosebud Coal) | 225 |
| 10-19 | Trace Elements in Condensate From an Illinois No. 6 Coal Gasification Test | 226 |
| 10-20 | Distribution of Trace Elements for Lurgi Gasification | 227 |
| 10-21 | Potential Rate of Trace Elements | 227 |
| 11-1 | System Performance Summary | 232 |
| 11-2 | Overall Power Generation Cost Summary | 233 |
| 11-3 | Material Balance for U-Gas/Air-Blown/Selexol | 236 |
| 11-4 | Material Balance for U-Gas/Air-Blown/Selexol - Low Steam | 241 |
| 11-5 | Material Balance for BCR/Air-Blown/Selexol | 246 |
| 11-6 | Material Balance for BCR/Oxygen-Blown/Selexol | 251 |
| 11-7 | Utilities - U-Gas/Selexol/Air-Blown | 255 |
| 11-8 | Utilities - U-Gas/Selexol/Air-Blown - Low Steam | 256 |

TABLES


| Number | Title | Page |
|---|---|---|
| 11-9 | Utilities BCR/Selexol - Air-Blown | 257 |
| 11-10 | Utilities BCR/Selexol - Oxygen-Blown | 258 |
| 11-11 | Molten Salt System | 262 |
| 11-12 | Utility Summary - Molten Salt System | 266 |
| 11-13 | Material Balance for U-Gas/Low Steam/Conoco | 268 |
| 11-14 | Material Balance for BCR/Air-Blown/Conoco | 272 |
| 11-15 | Material Balance for BCR/Oxygen-Blown/Conoco | 277 |
| 11-16 | Utility Summary - BCR/Conoco - Air-Blown | 281 |
| 11-17 | Utility Summary - BCR/Conoco - $O_2$ - Blown | 282 |
| 11-18 | Utility Summary - BCR/Conoco - Air-Blown | 283 |
| 11-19 | Fuel Processing Cost Summary Low-Temperature Cleanup | 286 |
| 11-20 | Fuel Processing Cost Summary High-Temperature Cleanup | 287 |
| 11-21 | Power Systems Cost Summary | 288 |
| A-1 | Water Balances for the BCR/Air-Blown/Selexol Process Overall Water Balance | 294 |
| A-2 | Water Balances for the BCR/Oxygen-Blown/Selexol Process Overall Water Balance | 295 |
| A-3 | Water Balances for the IGT/Air-Blown/Selexol Process Overall Water Balance | 296 |
| A-4 | Cooling Water Requirements for BCR/Air-Blown/Conoco Process | 297 |
| A-5 | Cooling Water Requirements for BCR/Oxygen-Blown/Conoco Process | 298 |
| A-6 | Cooling Water Requirements for IGT/Air-Blown/Conoco Process | 299 |
| A-7 | Flow Characterization for BCR/Air-Blown/Selexol Sour Water Treatment | 310 |

TABLES


| Number | Title | Page |
|---|---|---|
| A-8 | Flow Characterization for BCR/Oxygen-Blown/Selexol Sour Water Treatment | 311 |
| A-9 | Flow Characterization for IGT/Air-Blown/Selexol Sour Water Treatment | 312 |
| A-10 | Cost Estimation of Sour Water Treatment | 313 |
| A-11 | Summary of Pertinent Data for Conventional Ion Exchange Resins | 314 |
| A-12 | Raw Water Analysis | 318 |
| A-13 | Performance Characteristics for Scheme 2 Boiler Feed Water Demineralization* | 319 |
| A-14 | Quality Requirements for Boiler Feedwater(1) | 320 |
| A-15 | Cost Summary for Demineralization of Boiler Feed Water | 321 |
| A-16 | Cost Comparison of Conventional Demineralizer and R/O Demineralizer Systems | 323 |
| A-17 | Control Limits for Cooling Tower Circulating Water Composition | 325 |
| A-18 | Impact of Softening Cooling Tower Make-Up Water | 326 |
| A-19 | Cooling Tower Water Treatment Cost | 327 |
| B-1 | Equipment List for Air-Blown BCR Process | 332 |
| C-1 | Power System Cost Breakdown | 340 |

## CONVERSION FACTORS

| | | |
|---|---|---|
| ft x 0.3048 | = | m |
| $ft^3$ x .02832 | = | $m^3$ |
| gal x .003785 | = | $m^3$ |
| GPM x 4.403 | = | $m^3/s$ |
| atm x 101,325 | = | $N/m^2$ (Pa) |
| $lb_f/in^2$ x 6895 | = | $N/m^2$ (Pa) |
| $lb_f$ x 4.448 | = | N |
| $lb_m$ x .4536 | = | kg |
| ton x 907.2 | = | kg |
| hp x 746 | = | W |
| Btu x 1056 | = | J |
| *$Btu/ft^3$ x 37,288 | = | $J/m^3$ |
| Btu/lb mol x 2328 | = | J/kg mol |
| $lb_m/10^6$ Btu x .4295 | = | $kg/10^9$ J |
| F subtract 32 x 5/9 | = | C |

* Differences between various "standard" conditions (e.g., SCF vs. normal $m^3$) may require slight modifications to this conversion factor.

ACKNOWLEDGMENT

The work described herein was performed by the United Technologies Research Center (UTRC) for the Synthetic Fuels Program, Fuel Process Branch, Industrial Environmental Research Laboratory, Research Triangle Park, under EPA Contract 68-02-2179 during the period September 1976 to December 1977 Included among those who assisted in performing this work were Messrs. R. L. Sadala, S. J. Lehman, W. R. Davison and Dr. E. B. Smith of UTRC. Mr. V. B. May headed the efforts of Hittman Associates, Inc. who provided expert assistance in the area of effluent emissions and water use. The subcontract effort of Fluor Engineers and Contractors, Inc. on gasification processes was ably headed by Mr. J. Moe. The UTRC Program Manager was Dr. F. L. Robson and the Deputy Program Manager was Mr. W. A. Blecher.

Technical Project Officers for the EPA were Mr. W. J. Rhodes until July 1977 and, subsequently, Dr. T. W. Petrie. Valuable guidance and comments received from these gentlemen are gratefully acknowledged.

Process information was made available from current studies sponsored by the Electric Power Research Institute (EPRI). The cooperation and comments of Dr. M. J. Gluckman of EPRI are also gratefully acknowledged.

# SECTION 1

# SUMMARY

## INTRODUCTION

The electric utility industry is the largest single consumer of basic energy in the United States. As such, it is under massive pressure to utilize indigenous fuels, especially coal, the most plentiful fossil fuel. However, the industry realizes that environmental protection is a primary concern and, thus, there is a great interest in methods of generating electricity with minimum environmental intrusion. One of the first studies to identify advanced methods of generating electric power at minimum emissions and cost was reported on in December 1970 (Reference 1-1) by the United Technologies Research Center (UTRC) for the National Air Pollution Control Administration, an EPA predecessor organization. In this study, the combined gas turbine-steam turbine power cycle, or simply combined-cycle system, used in conjunction with coal gasification and fuel gas cleanup (Figure 1-1) was identified as the most attractive of the various advanced power systems in terms of emissions and cost of power. Subsequent studies by a wide variety of organizations (e. g., References 1-2, 1-3, and 1-4) have reached the same conclusion.

Since 1973, UTRC has been carrying out further studies for the EPA Fuel Process Branch, Industrial Environmental Research Laboratory/Research Triangle Park with the objective of providing more detailed definitions of the technological status, the potential environmental intrustion, the performance, and economics of coal gasification with both low- and high-temperature sulfur cleanup processes integrated with combined-cycle power systems. The model integrated power plants are nominal 1000-MW, base-load plants.

In this and previous studies (References 1-5 and 1-6) fixed-bed, fluid-bed, entrained-flow and molten salt gasifiers have been considered as have various types of physical and chemical sorbent cleanup systems. Power systems technology has been both first-generation (~1980-82) systems operating at 2200 F* turbine inlet and second-generation (post 1985) systems

---

*EPA's policy is to use metric units. For the convenience of the reader making comparisons to results of previous studies, non-metric units are used herein. A list of conversion factors to metric units is given on page xiv.

## TYPICAL PRESENT–DAY WASTE–HEAT COMBINED GAS AND STEAM TURBINE SYSTEM

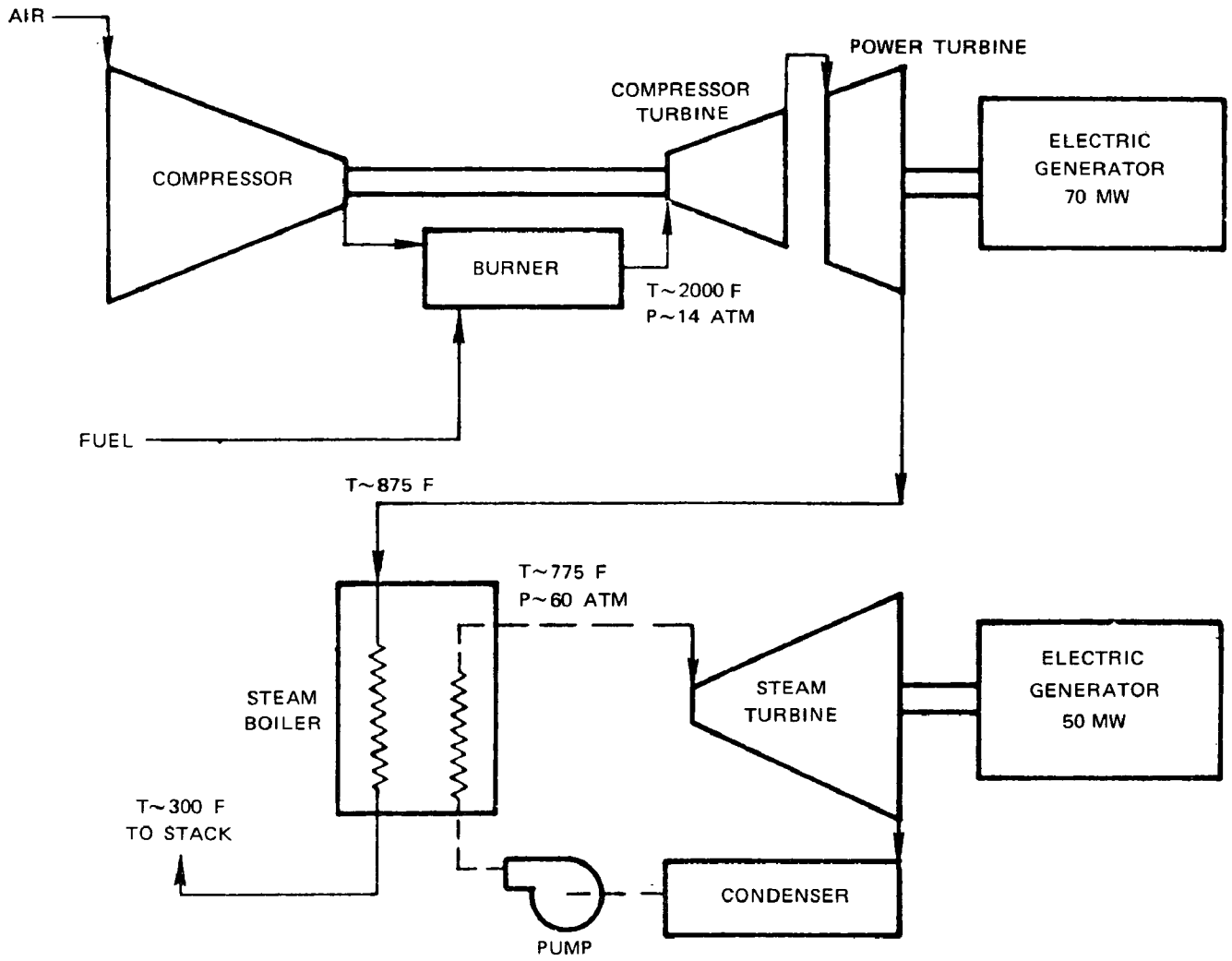


FIG.1–1

operating at 2600 F. Emphasis has been placed on the latter since it appears that it will be the last half of the 1980 decade before gasification processes become available for utility use.

In the performance of these studies, UTRC has had the expert assistance of Foster Wheeler Energy Corporation, Fluor Engineers and Constructors, Inc., Hittman Associates, Inc. and the Allied Chemical Company. In addition, the Electric Power Research Institute (EPRI) has provided considerable data on several gasification processes which were the subject of current EPRI-sponsored research at Fluor Engineers and Constructors. The Conoco Coal Development Co. has provided data relating to their half-calcined dolomite desulfurization process.

The major conclusion of these studies is that the integrated coal gasification/sulfur cleanup/combined-cycle power system offers the potential of lower environmental intrusion and lower cost electricity than conventional power plants with flue gas desulfurization. During the course of the studies, the gasifier operating conditions were updated and modified where possible to reduce utility consumption and thereby increase the gasifier efficiency. This is reflected throughout the entire power plant by lower capital and fuel costs and lower emissions. Thus, each subsequent study phase has indicated an increased attractiveness for the integrated power plants.

For the systems studied, sulfur removal costs showed little increase as emissions were reduced to one-third or less of the EPA standard for coal-fired power plants. While fuel gas cleanup equipment for medium-Btu gas is smaller and less costly than for low-Btu gas, an integrated plant with an oxygen-blown gasifier showed no advantage over its air-blown counterpart; in fact, for the gasifier type considered, it had a higher heat rate, higher power costs, and potentially higher $NO_x$ emissions.

During the course of the overall program, continual refinements were made in the integration process which were more advantageous to the systems using low-temperature cleanup. Thus, early estimates for the performance advantages of the integrated power plant with high-temperature sulfur removal have been decreased to marginal levels. Since the performance and cost of the high-temperature cleanup system are based upon extrapolations of bench-scale tests, whereas those of the low-temperature system are based upon adaptations of commercial-scale equipment, it would not be unfair to presume that the proven low-temperature systems should offer an attractive choice.

## POWER PLANT COMPONENTS

The power plant consists of three basic elements: gasification, cleanup and power generation. One of the most important factors in the gasified coal/combined-cycle power system is the integration of the components to achieve proper utilization of waste heat both in the steam cycle and in the thermal regeneration of the fuel gas streams.

## Gasification

The major generic types of gasifiers have been examined including fixed, entrained, and fluidized bed designs and the molten salt gasifier which combines gasification and sulfur removal in a sodium carbonate melt. Table 1-1 lists the gasifiers considered. Emphasis has been placed on those gasifier operating characteristics, especially utility consumption, which are a key factor in performance of the cleanup system and the combined-cycle generating plant. For example, one change which has a widespread effect, particularly on the air-blown, entrained-bed gasifier (Figure 1-2) is the reduction in steam feed rate.

TABLE 1-1 GASIFIER TYPES CONSIDERED

| Generic Type | Specific Gasifiers Considered | Status |
|---|---|---|
| Fixed Bed | Morgantown Energy Research Center | Ton/hr test unit; other fixed bed designs are commercially available |
| Entrained Bed | Bituminous Coal Research (BCR) Two Stage | Oxygen-blown unit for syn gas production undergoing tests; air-blown version being designed by Foster Wheeler Energy Corporation |
| | Koppers Totzek Atmospheric Pressure | Commerical |
| | Texaco Partial Oxidation | Commercial on oil |
| Fluid Bed | Institute of Gas Technology U-Gas | Bench scale test |
| Molten Salt | Pullman Kellogg and Rockwell International | Ton/hr test unit being built by Rockwell |

While no practical minimum steam feed rate has been established, on a theoretical basis a value of 0.144 lb steam per lb coal was determined. Previous studies had used values as high as 0.57. This reduction, coupled with one in the coal transport gas flow rate, produced an increase from 78.5 percent to 83 percent in predicted cold gas efficiency (fuel gas chemical heating value/coal chemical heating value). This improved efficiency is accompanied by a reduction in both water vapor and carbon dioxide in the raw fuel gas. By reducing the amount of steam diluent, it is theoretically possible to come close to a 1:1 ratio between oxygen and carbon molecules in the feed, thereby improving the product gas heating value due to the increased production of CO instead of $CO_2$.

FIG.1-2

BCR ENTRAINED – FLOW GASIFIER

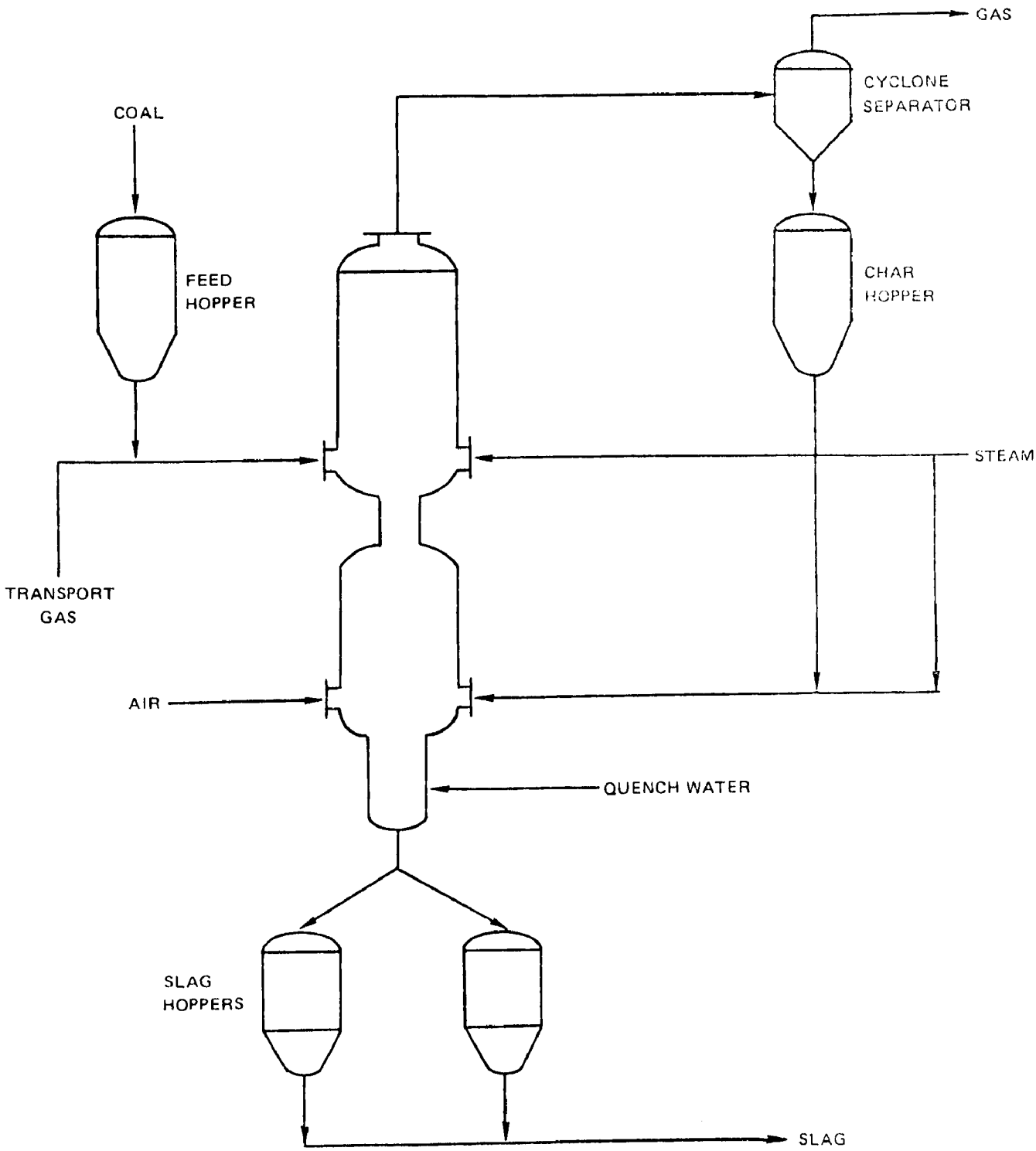

Aside from an improved coal to gas conversion efficiency there are several other beneficial effects. Reduced water vapor concentration means less heat is lost at low temperature due to condensation of water in the fuel gas stream. The increased chemical energy can be converted at combined-cycle efficiency whereas sensible energy associated with $CO_2$ production in the gasifier for the most part can only be converted at steam cycle efficiency. Also, equipment capital savings are realized due to reductions in water purification requirements, condensate processing and fuel gas volume.

The modifications of gasifier operating conditions can also produce changes in the formation of potential pollutants in the gasifier. The sulfur in the feed coal appears mainly as $H_2S$ and COS after gasification. Other sulfur compounds are present but have not been satisfactorily identified. When operating with excess steam, chemical equilibrium calculations for the entrained bed gasifier indicate that approximately 96 percent of the sulfur would appear as $H_2S$ and nearly 4 percent as COS. At the low steam flow rates, the same calculations indicate approximately 6 percent COS. This could affect the size and performance of the sulfur cleanup system as will be described later.

The gasifier operating conditions also could affect the formation of $NO_x$. The two major sources of $NO_x$ emissions are fuel-bound nitrogen compounds which are converted to $NO_x$ during combustion and thermal $NO_x$ which results from locally high combustion temperatures. Equilibrium calculations for the entrained bed gasifier indicate a 50 percent reduction in fuel-bound nitrogen compounds (taken as ammonia) when the gasifier is operated at the low steam conditions. While essentially all the fuel-bound nitrogen compounds can be removed by water scrubbing as part of the low-temperature gas cleanup system, there has been no method determined for removal at high-temperature.

The previous discussion has focused on a particular type of gasifier, the air-blown entrained bed type. In many respects the other gasifiers studied are similar; however, some significant differences should be noted. Both the fluid-bed (U-Gas) and molten salt types can expect a high degree of catalytic activity as a result of their basic design concept. This should be quite desirable since a major concern in other designs is that COS and $NH_3$ levels will exceed equilibrium values.

Oxygen, rather than air, has long been used as the oxidant in gasifiers when the desired off gas consists mainly of $H_2$ and CO with a small amount of $CO_2$. Usually called 'syn-gas,' this gas with a heating value of approximately 300 Btu/SCF is typically used in the production of $H_2$. Because of the larger technology base of oxygen-blown gasification and also because of the similarity of its combustion to that of natural gas, there has been considerable interest in the use of this medium-Btu gas in the utility industry as well as in industrial boilers.

In order to ascertain the benefits, if any, that could be obtained from the use of this gas in integrated power plants, a comparison of power plants

with oxygen- and air-blown entrained flow gasifiers with both high- and low-temperature cleanup was made. The results indicated that the power plant with the oxygen-blown gasifier had higher heat rates, higher costs and the potential for very high $NO_x$ emissions as compared to its air-blown counterpart.

Fuel Gas Cleanup Systems

The key advantage of the integrated gasified-coal, combined-cycle system is the opportunity to remove sulfur compounds prior to combustion while the gas is at pressure. The process whereby the fuel gas is desulfurized is the focal point of the environmental impact of the system. Both high- and low-temperature cleanup systems have been investigated. Summaries of the various cleanup systems reviewed are given in Table 1-2 (low-temperature) and Table 1-3 (high-temperature). The Selexol* process (Figure 1-3) of Allied Chemical was selected as typical of the low-temperature system while the half-calcined dolomite process (Figure 1-4) of Conoco was selected for the high-temperature system.

Similar to other sulfur removal systems, the Selexol process is sensitive to the type of sulfur compound that must be removed, i.e., whether sulfur in the form of COS must be removed in addition to $H_2S$. While $H_2S$ is quite soluble compared to other gases in the fuel, COS is only about 30 percent as soluble as $H_2S$. As a result, if the system must be sized for appreciable COS removal to meet very low levels of sulfur emissions, its cost and utility requirements increase dramatically.

In discussing sulfur emission levels, it is important to note that all sulfur has been assumed to appear as either $H_2S$ or COS in the fuel gas. Thus, while estimates may show emission levels of less than 0.1 $lb/10^6$ Btu, these do not account for other compounds that may not be removed or processed by the particular sulfur removal or recovery system. For example, data for a Synthane gasifier (oxygen-blown) show a total concentration of up to 100 ppm of other sulfur bearing compounds. If none of these were removed, the resultant emission from these compounds alone would be on the order of 0.05 to 0.1 $lb/10^6$ Btu. While data for this type of gasifier are not directly applicable, they do provide an indication of the limitations of this study.

In the design of the Selexol sulfur removal system, operating temperature is rather critical. Gas sweetening plants generally run with subambient absorber temperatures. However, in the interests of simplifying the process for application in the utility industry, a study was made of the effect of Selexol operating temperature on the overall power plant performance and cost. The results of this study indicated a decided reduction in the cost of electricity due to lower solvent flow rate associated with low-temperature operation. It should be noted that this study was based upon a Selexol system designed for virtually complete $H_2S$ removal from the fuel gas (down to

*A registered trademark of Allied Chemical Corp.

TABLE 1-2

LOW TEMPERATURE CLEANUP PROCESSES

Basis: 8400 tons/day Illinois No. 6 Coal Fed to BCR Gasifier, or 6700 ppm of Influent $H_2S$

| Process | Absorbent | Type of Absorbent | Temp. °F | Pressure | Efficiency of S Removal | | Absorbent Characteristics | | | | Form of Sulfur Recovery | Status |
|---|---|---|---|---|---|---|---|---|---|---|---|---|
| | | | | | % $H_2S$ Influent | Effluent $H_2S$ ppm | Life | Regeneration | Selectivity toward | Make up rate | | |
| **Chemical solvent type** | | | | | | | | | | | | |
| 1. MEA | Monoethanolamine | Aqueous solution | 80 to 120 | Insensitive to variation in pressure | 99 | ~100 | | Thermal | Forms non-regen. comp. with COS, $CS_2$ | 50 to 100% | As $H_2S$ gas | Commercial |
| 2. DEA | Diethanol amine | Aqueous solution | 100 to 130 | Insensitive to variation in pressure | 99 | ~100 | | Thermal | Absorbs $CO_2$, does not absorb COS, $CS_2$ | < 5% | As $H_2S$ gas | Commercial |
| 3. TEA | Triethanolamine | Aqueous solution | 100 to 150 | Insensitive to variation in pressure | 99 | ~100 | | Thermal | $H_2S$ | < 5% | As $H_2S$ gas | Commercial |
| 4. Alkazid | Potassium dimethyl amino acetate | Aqueous solution | 70 to 120 | Insensitive to variation in pressure 1 - 80 atm | 99 | ~100 | | With steam | $H_2S$ | | As $H_2S$ gas | Commercial |
| 5. Benfield | Activated potassium carbonate solution | Aqueous solution | 150 to 250 | | 99 | $H_2S$ + COS ~100 | Unlimited No degradation | With steam | $H_2S$ is high | | As $H_2S$ gas | Commercial |
| 6. Catacarb | Activated potassium carbonate solution | Aqueous solution | 150 to 250 | Insensitive to variation in pressure generally > 300 psi | 99 | $H_2S$ + COS ~100 | | With steam | $H_2S$ - partial also absorbs COS, $CS_2$ | < 5% | As $H_2S$ gas | Commercial |
| **Physical solvent type** | | | | | | | | | | | | |
| 7. Sulfinol | Sulfolane + Diisopropanoamine | Organic solvent | 80 to 120 | High pressure preferred | 99 | $H_2S$ + COS ~100 | | Low pressure heating or with steam | $H_2S$, and also absorbs COS, $CS_2$ and mercaptans | | As $H_2S$ gas | Commercial |
| 8. Selexol | Polyethylene glycol ether | Organic solvent | 20 to 80 | | 99 | $H_2S$ + COS ~100 | | | $H_2S$ also absorbs COS | | As $H_2S$ gas | Commercial |
| 9. Rectisol | Methanol | Organic solvent | < 0 | | 99 | ~100 | | | $H_2S$ | | | Commercial |
| **Direct conversion** | | | | | | | | | | | | |
| 10. Stretford | $Na_2CO_3$ + anthraquinone sulfonic acid | Alkaline solution | | | 99.9 | ~10 | | | $H_2S$ | 50 to 100% | Elemental sulfur | Commercial |
| 11. Townsend | Triethylene glycol | Aqueous solution | 150 to 250 | | 99.9 | ~10 | | | $H_2S$ | | Elemental sulfur | |
| **Drybed type** | | | | | | | | | | | | |
| 12. Iron sponge | Hydrated $Fe_2O_3$ | Fixed bed | 70 to 100 | | 99 | $H_2S$ + COS ~100 | | | $H_2S$ and also towards COS, $CS_2$ and mercaptans | | Elemental sulfur | Commercial |

# HIGH TEMPERATURE CLEANUP PROCESSES

Basis: 8400 tons/day Illinois No. 6 Coal Fed to BCR Gasifier, or 6700 ppm of Influent $H_2S$

| Process | Absorbent | Type of Bed | Temp. °F | Pressure | Efficiency of S Removal | | Absorbent Characteristics | | | | Form of Sulfur Recovery | Energy Required | | Status |
|---|---|---|---|---|---|---|---|---|---|---|---|---|---|---|
| | | | | | % $H_2S$ Influent | Effluent $H_2S$ ppm | Life | Regeneration | Selectivity toward | Make up rate | | Elec. kw | Other stu | |
| 1. Bureau of Mines | Sintered pellets of $Fe_2O_3$ (25%) and fly ash | Fixed bed | 1000 to 1500 | Insensitive to variation in pressure | ~95 | ~350 | >174 cycles Wt loss < 5% | With air | $H_2S$, COS | <5% | As $SO_2$ gas | | | Pilot |
| 2. Babcock and Wilcox | $Fe_2O_3$ | Fixed bed | 800 to 1200 | Insensitive to variation in pressure | ~99 | ~75 | | | | | As 12-15% $SO_2$ gas | | | Experimental |
| 3. CONOCO | Half calcined dolomite | Fluidized bed | 1500 to 1800 | ~200 psia $H_2S$ removal is high at low pressure | ~95 | ~350 | | 10-13% with steam and $CO_2$ | $H_2S$, COS | 1% of circulation rate | As $H_2S$ gas to Claus process | 96.360 | | Pilot |
| 4. Air products | Calcined dolomite | Fixed bed | 1600 to 2000 | Insensitive to variation in pressure | | | minimum 5-6 cycles | 80-90% with steam and $CO_2$ | $H_2S$, COS | | As $H_2S$ gas to Claus process | | | Abandoned |
| 5. Battelle Northwest | Molten carbonates (15% $CaCO_3$) | Solution | 1100 to 1700 | Atmospheric $H_2S$ removal is high at low pressure, 5-6 psig | ~95 | ~350 | | With steam and $CO_2$ | $H_2S$, COS, fly ash | | As $H_2S$ gas to Claus process | | | Pilot |
| 6. IGT - Meissner | Molten metal (proprietary) | Splashing contact | 900 | | ~98 | ~150 | | Electrolytic | $H_2S$, COS | | | 9830 | | Conceptual |

## SELEXOL LOW – TEMPERATURE DESULFURIZATION

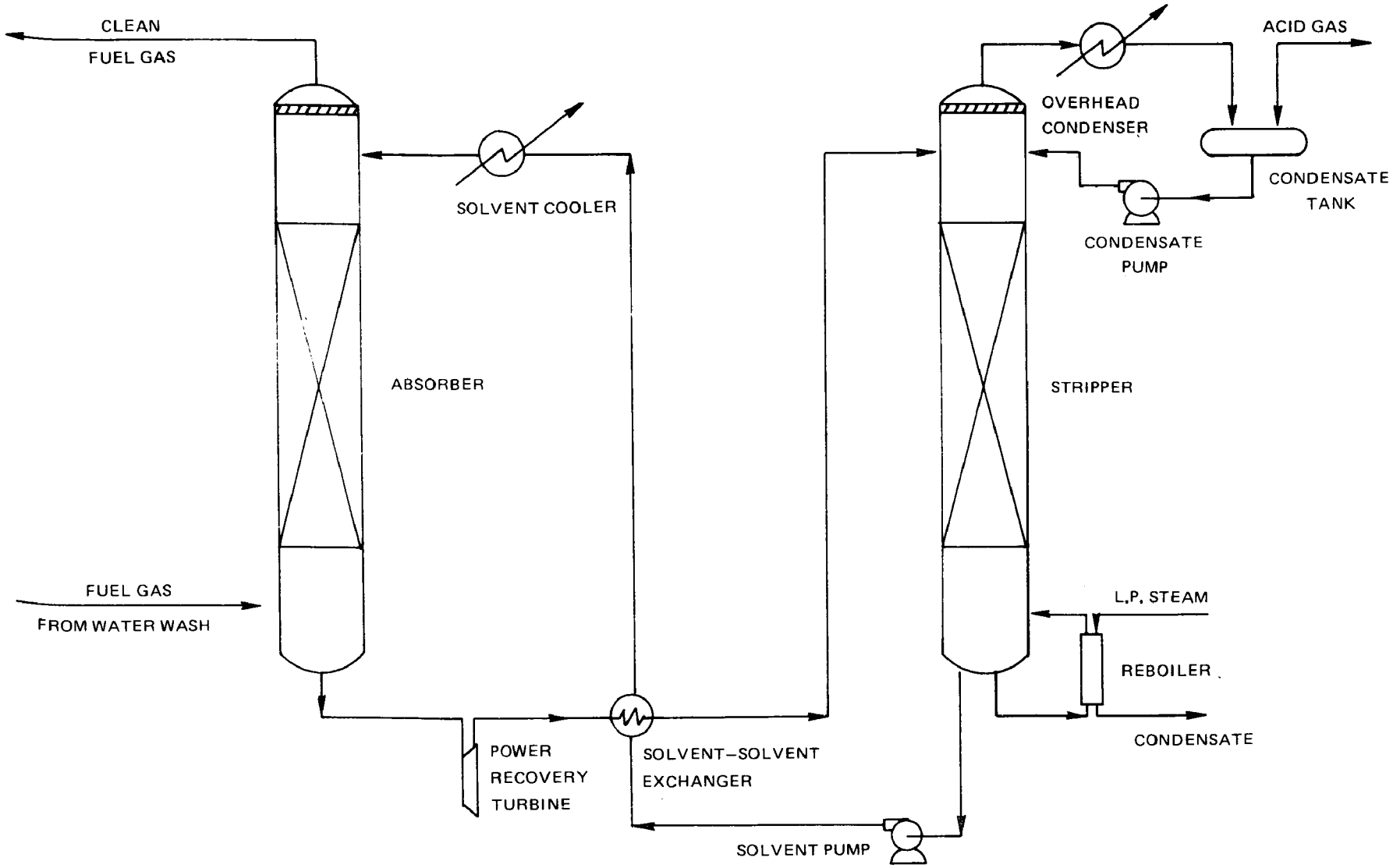


FIG.1–3



77–08–299–2

## CONOCO HIGH – TEMPERATURE DESULFURIZATION

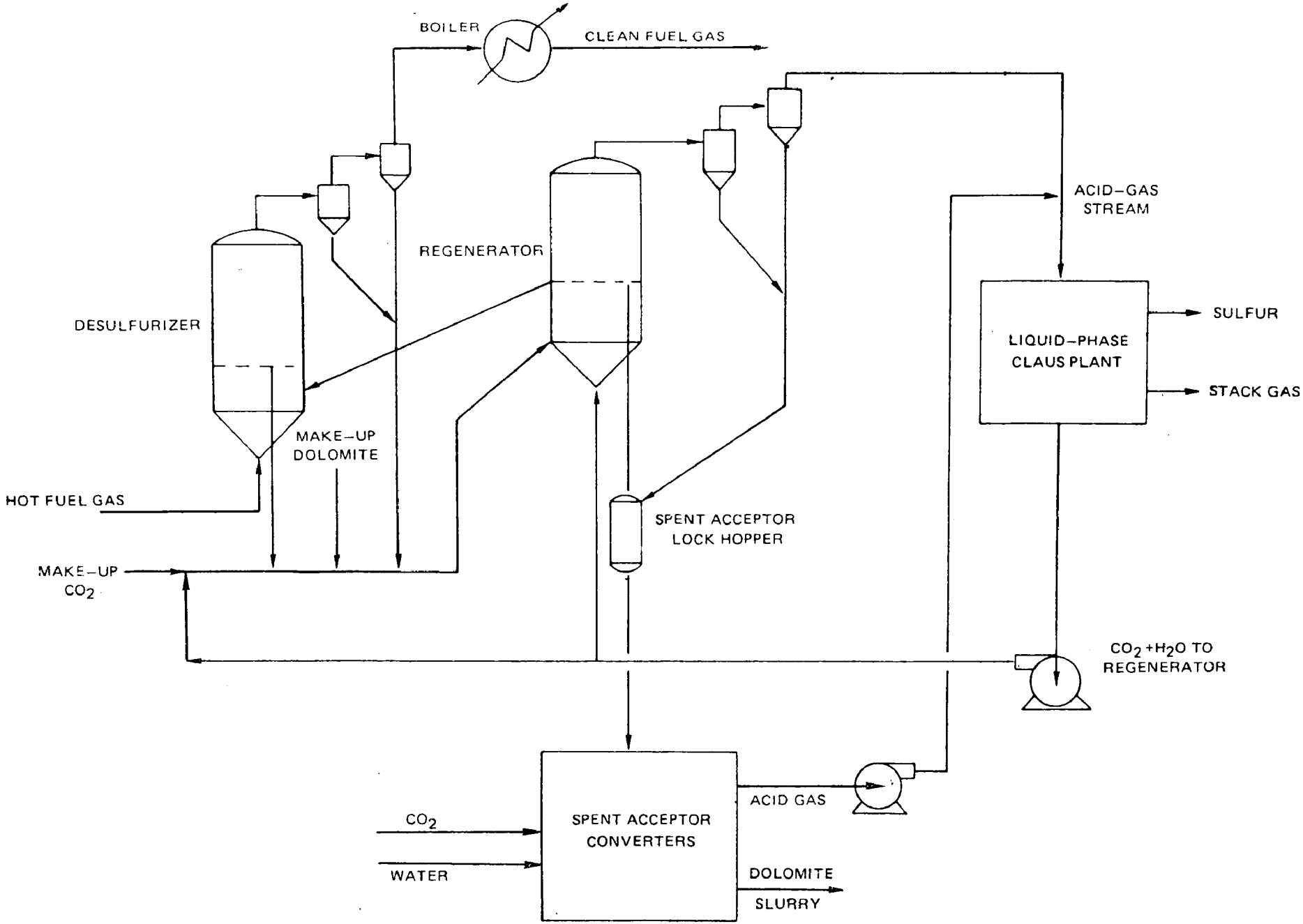


FIG. 1–4



77–08–299–1

approximately 35 ppm) and that total power plant sulfur emissions were on the order of 0.2 to 0.4 lb/$10^6$ Btu. If less ambitious sulfur removal goals were considered (Reference 1-7), it appears that there would be a smaller difference between ambient and refrigerated operation.

Performance was estimated for power plants using each of the gasifier types followed by the Conoco half-calcined dolomite high-temperature desulfurization system. Reactions within the desulfurizer are reported to be close to equilibrium and are limited by the amount of water vapor and carbon dioxide in the fuel gas. Low concentrations of these molecules in the raw fuel gas improve desulfurization. The latest data for the air-blown entrained bed gasifier with minimum steam feed were especially attractive for use in a combined-cycle application with the high-temperature desulfurizer. To maintain gasifier temperature within design limits under minimum steam feed, oxidant feed must also be low; hence, the product gas has low concentrations of both water vapor and carbon dioxide. Desulfurizer performance under these conditions resulted in an estimated emission after combustion of 0.09 lb $SO_2$/$10^6$ Btu. Similarly, use of the gasifier equilibrium model to simulate the fluid bed/high-temperature cleanup system at reduced steam feed rates indicated emissions of approximately 0.15 lb $SO_2$/$10^6$ Btu.

Removal of particulates and nitrogen compounds also must be considered when evaluating fuel cleanup processes. For example, the level of particulates needed to avoid excessive high-temperature turbine erosion is lower than the environmental regulations. Thus, the water wash associated with low-temperature systems which clean the fuel gas stream to gas turbine tolerance will meet the EPA particulate standard. No such system is available for high-temperature processes.

Fuel cleanup system characteristics also affect the quantity of nitrogen compounds in the fuel which could form $NO_x$ during combustion. For systems using low-temperature sulfur removal, a water scrub is incorporated which effectively removes both particulates and ammonia, the major nitrogen compound after gasification. Removing ammonia minimizes $NO_x$ formed during combustion in conventional burners but thermally generated $NO_x$ is still a problem. However, United Technologies sponsored tests carried out in conjunction with the Texaco Development Company at their Montebello California Research Laboratory have led to the identification of a potentially attractive burner concept. The test results (References 1-8 and 1-9) indicate that a premix burner should meet both current and proposed $NO_x$ standards. Thorough premixing of fuel and air permits control of combustion temperature and associated NO production. To avoid possible preignition, fuel temperature to the gas turbine has been limited to 1000 F with both high- and low-temperature cleanup systems. While this in effect penalizes the high-temperature cleanup system by not allowing it to utilize the fuel gas sensible heat over 1000 F in the combined cycle, this penalty is necessary if excessive $NO_x$ emissions are to be avoided.

## Power System

Throughout the course of the ongoing studies, the power system has been updated to reflect advances in gas turbine technology. The latest update includes results from the recently completed DOE-sponsored High-Temperature Turbine Technology Program (HTTTP) Phase I. The advanced turbine defined in this program has a dual-spool gas generator and a free turbine driving the generator. The overall pressure ratio is 18:1 at a turbine inlet temperature of 2600 F. Compressor discharge air is precooled to 400 F prior to use in cooling the rotating blades while water cooling is used in the static sections. Advanced ceramic coatings were projected for a number of hot section static parts. The characteristics of the power system are given in Table 1-4.

The present study has adapted the flow path of the HTTTP engine but has assumed ceramic vanes, which require no cooling, rather than the water cooled concept. The resulting performance is essentially the same.

A gas turbine pressure ratio of 18:1 results in an exhaust temperature that is sufficiently high to provide both superheat and reheating for a 2400 psi, 950 F reheat steam cycle. The use of such a high-performance steam system would not be practical in a conventional distillate-fueled combined cycle. This is one of the advantages of the fully integrated system. Little, if any, evaporation is done in the heat recovery boiler in the gas turbine exhaust stream. High-pressure saturated steam is raised in the gasifier and cleanup process and can be extracted from the steam cycle for process use after having produced some useful output. The net effect is a range of overall coal to power conversion efficiencies from 42 percent to 46 percent. These high efficiencies are important not only because they minimize the fuel dependent cost of power generation but also because increased plant efficiency implies increased electrical output for a given size coal processing system. Thus, the capital cost of fuel processing equipment per unit output is reduced. This, in turn, affects the degree to which the fuel can be cleaned within existing economic constraints.

# OVERALL POWER PLANT

The performance, cost, and environmental intrusion of the power plant cannot be defined until the various components have been integrated. The integrated plant is very complex involving the exchange of air and steam between the fuel processing and power systems. A simplified schematic of a typical integrated power plant with low-temperature desulfurization is shown in Figure 1-5.

## Performance

A summary of the performance, costs and major air emissions of eight integrated power plants is given in Table 1-5. Integrated power plants using fixed-bed gasification and the first-generation of advanced gas turbines

TABLE 1-4

POWER SYSTEM CHARACTERISTICS[1]

| | |
|---|---|
| **Gas Turbine** | |
| Inlet Temperature, F | 2600 |
| Pressure Ratio | 18 |
| Inlet Flow Rate, lb/sec | 983 |
| Unit Power, MW | 181 |
| **Steam Turbine** | |
| Throttle/Reheat Temperature, F | 950/950 |
| Throttle/Reheat Pressure, Psig | 2400/585 |
| Throttle/Reheat Flow Rate, lb/sec | 764/764 |
| Condenser Pressure, in Hg | 4 |
| Unit Power, MW | 453 |
| **Overall Power Plant** | |
| Gross Output, MW | 1178 |
| Net Output, MW | 1098 |
| Heat Rate,[2] Btu/kWh | 7775 |

(1) For integrated plants with air-blown entrained bed gasifiers and low-temperature fuel gas cleanup. Other types of gasifiers and cleanup systems will affect power system characteristics.

(2) Coal pile to busbar.

# BCR/SELEXOL SYSTEM

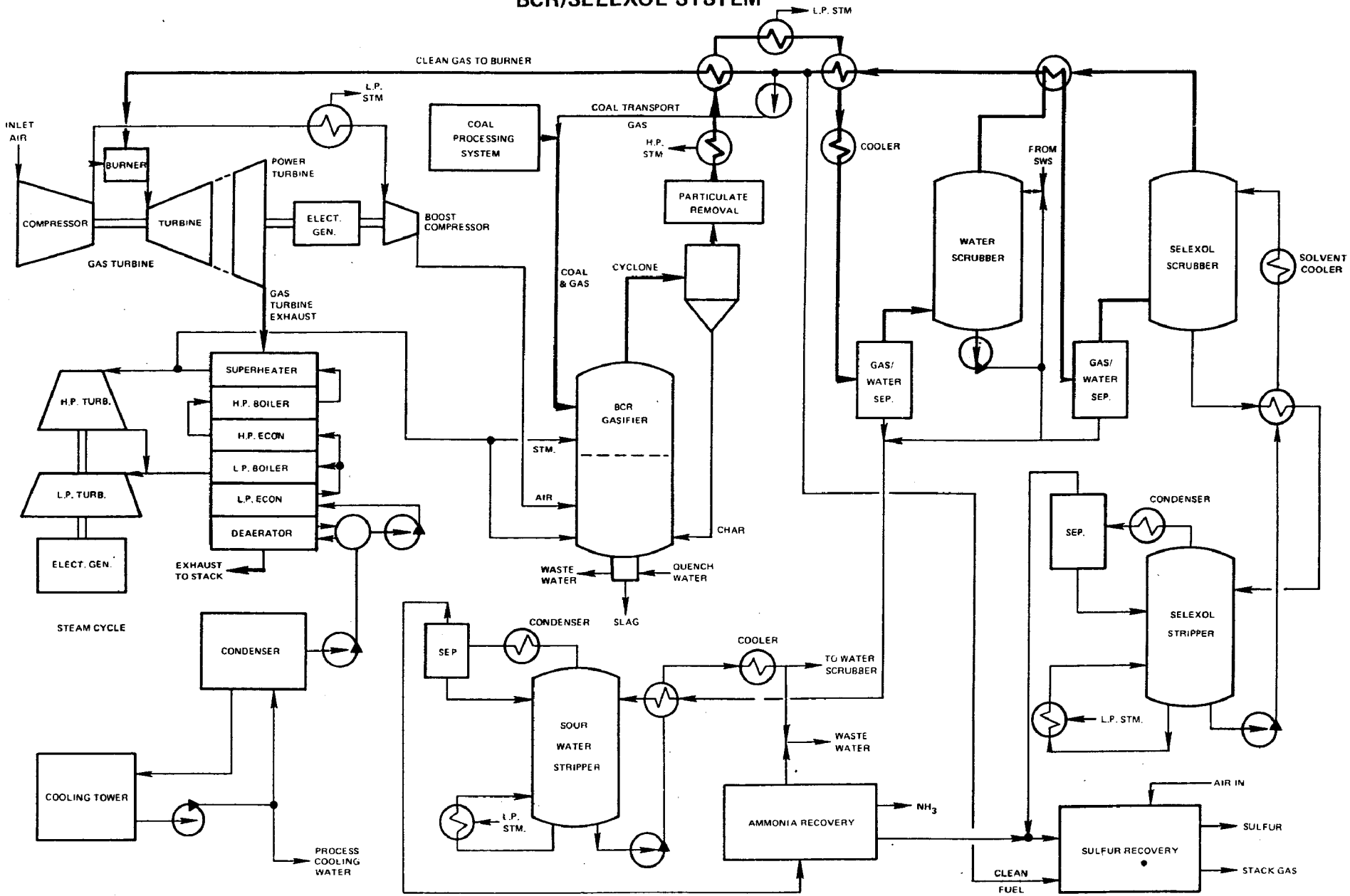


FIG.1–5

TABLE 1-5

SUMMARY OF POWER PLANT CHARACTERISTICS

| Powerplant Type | Air-Blown BCR/ Selexol | Air-Blown U-Gas/ Selexol(1) | Air-Blown U-Gas/ Selexol(2) | Air-Blown BCR/ Conoco | Air-Blown U-Gas/ Conoco(2) | Air-Blown Molten Salt | $O_2$-Blown BCR/ Selexol | $O_2$-Blown BCR/ Conoco |
|---|---|---|---|---|---|---|---|---|
| Net Power(3) - MW | 1098 | 1074 | 1109 | 1136 | 1145 | 955 | 1045 | 1098 |
| Net Efficiency - % | 43.9 | 42.9 | 44.3 | 45.4 | 45.7 | 43.3 | 41.8 | 43.9 |
| Capital Cost - $/kW | 657 | 663 | 641 | 597 | 543 | 683 | 725 | 709 |
| Power Cost(4) - Mills/kWh | 31.76 | 32.24 | 31.08 | 29.25 | 27.08 | 32.99 | 34.87 | 33.88 |
| lb $SO_2/10^6$ Btu(5) | 0.40 | 0.19 | 0.23 | 0.13 | 0.19 | 0.21 | 0.39 | 0.73 |
| lb $NO_x/10^6$ Btu(6) | --(7) | --(7) | --(7) | 2.52(8) | 0.165(8) | --(7) | --(7) | 2.60(8) |
| lb particulate/$10^6$ Btu(6) | <0.01 | <0.03 | <0.03 | <0.10 | <0.10 | <0.03 | <0.03 | <0.10 |

(1) Based on EPRI-furnished data
(2) Based on UTRC/IGT-developed low steam process
(3) Based on 700,000 lb/hr coal flow
(4) Based on $1.00/$10^6$ Btu coal
(5) Emissions from power plant
(6) Emissions from power system
(7) Function of burner design <0.35 lb/$10^6$ Btu
(8) Fuel bound nitrogen only - burner design will add thermal $NO_x$

(turbine inlet temperature of 2200 F) have not been included because their performance and costs are significantly less attractive than the more advanced second-generation gasifiers and gas turbines. A detailed discussion of the less-advanced power plants is given in Reference 1-5.

Performance of the various advanced air-blown systems with low-temperature cleanup showed little difference between gasifier types. Generating efficiency from coal pile to busbar varied between 43 and 45 percent. The same is true of the air-blown fluid bed and entrained flow-type gasifiers when coupled with the Conoco high-temperature cleanup system. For these, the performance differences were so small that both can be considered to have an efficiency of 46 percent. Thus, on the basis of performance, there is little difference between integrated plants with either high- or low-temperature cleanup especially when the low-temperature cleanup components are carefully tailored to the power generating system.

It is of interest to note the comparison of integrated power plants with air- vs. oxygen-blown operation of the entrained bed-type gasifier. With low-temperature sulfur removal, a performance difference of approximately two points was estimated (air-blown, $\eta = 0.439$ and oxygen-blown, $\eta = 0.418$). The factors that cause this difference are associated with the loss of mass in the fuel gas due to the oxygen separation process and the relatively high steam feed needed in the oxygen-blown gasifier. In the case of the power plant with the low-temperature cleanup system, the heat of vaporization of the steam is completely lost when the water vapor in the fuel gas is condensed before entering the cleanup system. In the case of high-temperature cleanup, the water vapor remains in the fuel gas and acts in a manner similar to nitrogen as a diluent. While not enhancing performance, the fact that the water vapor is available to do work in the gas turbine, and to provide sensible heat in the waste heat boiler, results in a lesser difference between the oxygen- and air-blown power plants when used with a high-temperature cleanup system. Here the performance is separated by just over one point (air-blown, $\eta = 0.458$ and oxygen blown, $\eta = 0.444$).

Costs

For the air-blown power plants with the Selexol cleanup process, capital costs were quite close for the entrained bed, fluid bed and low-steam version of the fluid bed gasifier, varying from \$630/kW to \$660/kW. The estimated cost of electricity was also virtually the same for each, varying between 31 and 32 mills/kWh. Capital cost of the power plant with the oxygen-blown entrained bed-type system with Selexol cleanup was approximately \$720/kW. While performance of this power plant was estimated to be some two points poorer than that of the air-blown system, the cost of electricity (based on coal at $\$1/10^6$ Btu) was approximately 35 mills/kWh. This small difference of approximately 10 percent, while likely to be real, is well within the estimated accuracy limits of the costs available for use in the study and probably would not represent a real deterrent to the use of an oxygen-blown gasifier should the technology be preferred to that for an air-blown gasifier.

However, considering the use of fuel gas for power generation only, there appears to be no reason to opt for the oxygen-blown gasifier as it shows no advantage in terms of emissions, performance or cost and would clearly be somewhat more complex than the air-blown device.

The molten salt system can be considered to be a low-temperature system since it incorporates a water wash (albeit at 175 F). It was estimated to be comparable in cost to the others although the available cost estimates are less definitive. Capital cost is estimated to be $720/kW while electricity is estimated to cost 33 mills/kWh.

The integrated power plants using high-temperature desulfurization processes show some advantage in terms of reduced cost of electricity. However, they do not include provision for nitrogen removal from the fuel gas and, thus, would not be environmentally acceptable. A reduction of 2 to 3 mills/kW over air-blown Selexol-based systems is indicated, but this advantage is based on costs that include a larger number of unknown factors than do those for the Selexol-based systems. Both cleanup and particulate removal costs are based on extrapolation of small-scale lab test data as opposed to low-temperature equipment which, while not having handled gasifier effluents, has been built and run on a commercial scale. For the power plants using air-blown gasifiers with Conoco cleanup, estimated power costs range from 27 to 29 mills/kWh. The high-temperature, entrained bed, oxygen-blown system has only a slightly lower cost of electricity than that for its low-temperature counterpart (34 vs 35 mills/kWh). Thus, for a power plant with an oxygen-blown gasifier, there appears to be little incentive for the use of a high temperature sulfur removal device. Those plants using air-blown gasifiers show a 2 to 3 mill/kWh improvement and also have the potential for a significant reduction in sulfur emissions. It must be reiterated, however, that the high-temperature systems do not have identifiable methods of removing fuel-bound nitrogen nor have methods of particulate removal been satisfactorily defined.

During the course of this study improvements in integration as well as improvements in both gasifier and power system performance have resulted in an increase in the absolute value of overall power generating efficiency of from 3 to 6 percentage points. This not only means a lower fuel cost, but also permits the capital cost of gasification and cleanup to be spread over a larger power output thus reducing the specific cost of these parts of the system.

Environmental Intrusion

All of the power plants considered easily were able to meet the current EPA standards for stationary power plant sulfur emissions of 1.2 lb $SO_2/10^6$ Btu. The power plant with the oxygen-blown gasifier shows an advantage in terms of sulfur removal system size. Because there is no nitrogen diluent, the quantity of gas to be processed is reduced by more than one-third. With low-temperature cleanup, this results in an overall reduction in system cost and utilities without a large effect on sulfur emissions. For

the high-temperature case, equipment size, other than that of the absorber, is more dependent on sulfur loading than gas flow rate and there is little difference in size and cost. However, as noted earlier, due to the much lower water vapor and $CO_2$ concentrations, the sulfur emissions estimated for the air-blown system are significantly less than for the oxygen-blown system (0.1 vs. 0.7 lb/$10^6$ Btu.

Only the low-temperature systems such as Selexol incorporate a water scrubber for ammonia removal. Thus, in the high-temperature systems, production of $NO_x$ in the gas turbine could be quite high, as much as 2.5 lb $NO_x/10^6$ Btu if all the nitrogen went to the oxide form. (Currently proposed $NO_x$ standards for gas turbines are between 0.35 and 0.9 lb/$10^6$ Btu depending on the level of nitrogen in the fuel. The power plant standard is 0.7 lb $NO_x/10^6$ Btu). Clearly, if the high-temperature cleanup system is to be viable, the combustor design must be such as to convert ammonia and other fuel bound nitrogen compounds to $N_2$ rather than $NO_x$. This must be done while limiting the formation of thermal $NO_x$. Unfortunately, from the viewpoint of thermal $NO_x$ formation, the fuel gas from the oxygen-blown systems has a much higher flame temperature than even methane. Design of a $NO_x$-free combustor for that fuel could be a problem and certainly will be more difficult than for the low-Btu gas.

For those power plants with the low-temperature cleanup, ammonia has been removed and only thermally generated $NO_x$ is a problem. For thermal $NO_x$ control, several promising combustion techniques have been identified. After regeneration, the hot fuel gas and compressor discharge air combine to produce flame temperatures that would result in excessive $NO_x$ emissions in a conventionally designed combustor. Premixed, fuel-lean mixtures effectively reduce flame temperature and consequently limit thermal production of nitrogen oxides. In the premix concept, shown in Figure 1-6, air and fuel are well mixed prior to combustion thereby significantly reducing the combustion time and temperature and, thus, the production of $NO_x$. Fuel-lean conditions, however, have been shown to result in the conversion of virtually all ammonia to $NO_x$, which is unacceptable from an emission standpoint. Research has shown that fuel-rich combustion can convert virtually all of the fuel-bound nitrogen to $N_2$ while minimizing the production of thermal $NO_x$. Work currently underway for the EPA at the Government Products Division, Pratt & Whitney Aircraft has demonstrated $NO_x$ emissions as low as 50 ppm (~0.23 lb/$10^6$ Btu) while burning a fuel doped with 0.5 percent nitrogen (Reference 1-10).

In addition to sulfur and nitrogen oxides, sources of emissions exist throughout the coal and fuel gas processing train. Many of these are similar to those in coal-fired steam plants, particularly in regard to coal preparation and heat rejection. Residuals from the cleanup process will include waste water which must be treated prior to disposal. In general, treatment will be highly dependent on individual plant design and will be affected by plant location.

## POTENTIAL PRE–MIX COMBUSTOR LAYOUT

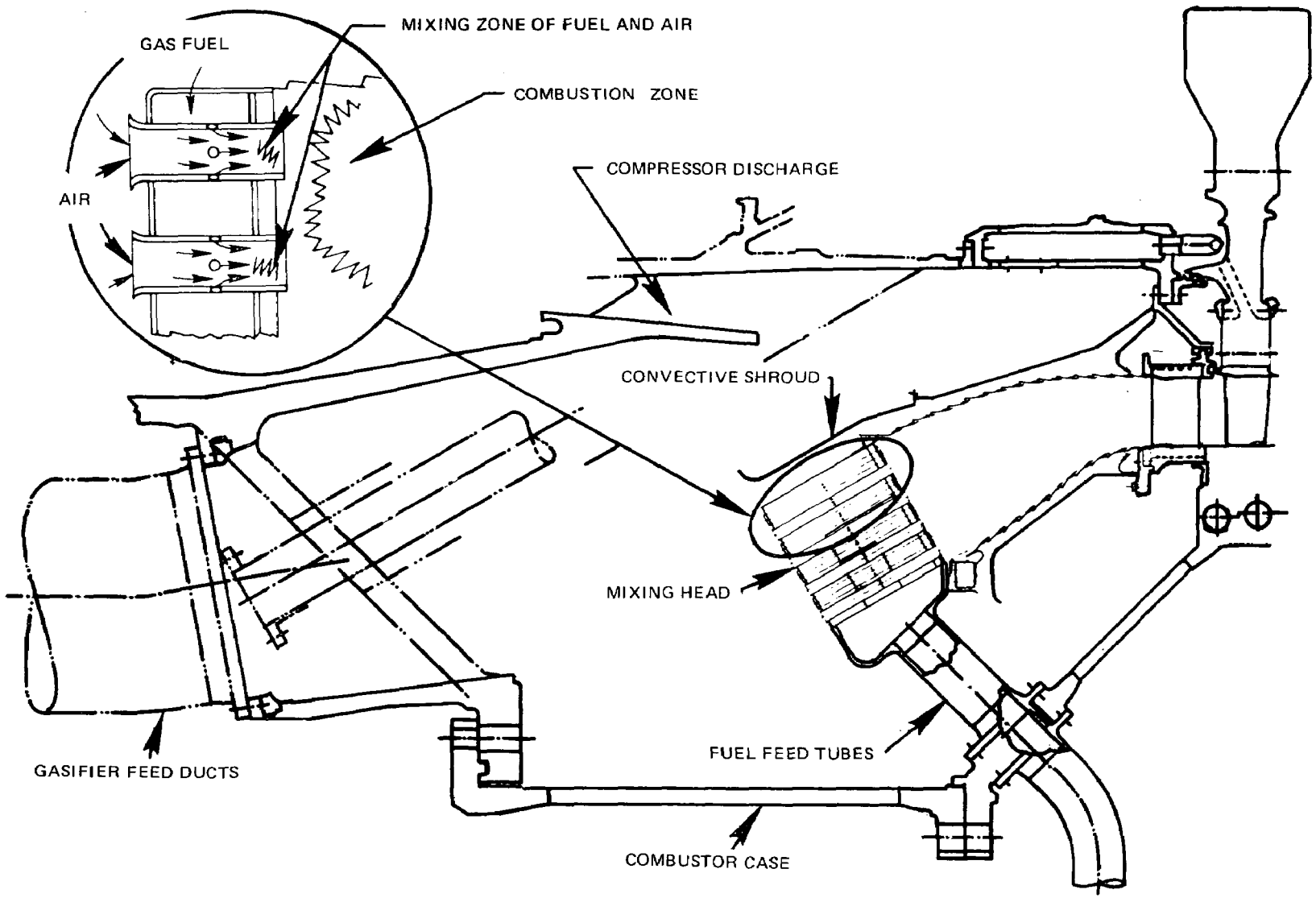


FIG.1–6

The overall environmental intrusion must also consider the many trace elements found in coal. Consideration of trace elements became a significant part of the program effort. Because of the many trace elements present in coal and the difficulty of discussing all of them, a ranking method was applied to limit the number considered. The ranking procedure was based on the ratios of concentration in typical Illinois No. 6 coal to allowable concentration in air, water or solid waste as given by Minimum Acute Toxicity Effluent (MATE) values and Estimated Permissible Concentrations (EPC) for each of the elements. The elements having the highest values of these ratios could have the highest potential for producing harmful effects. This selection process was tempered by consideration of the potential form that the element or its compounds might take, as well as experience as to which have proven to be troublesome in other applications. The elements As, B, Be, Cd, Cr, Hg, Ni, Pb and V were selected as potentially troublesome.

An attempt to discuss the fate of trace elements during the gasification of typical Illinois No. 6 coal and subsequent use of the gas is difficult. From the time that coal enters the plant boundary, there is the potential for it to cause some type of environmental intrusion. Except for some chemicals introduced for water treatment, the coal feed is the source of all trace element emissions. The gasifier itself, a closed vessel, discharges no pollutants directly to the environment. However, coal preparation and feed equipment as well as gasifier exit streams all must be considered.

Those dust and particulate emissions that occur prior to gasification will likely contain trace elements in a distribution of concentration similar to that of the parent coal. The fate of trace elements in the gasifier, whether they leave in the ash/slag or off-gas, is a function of factors such as gasifier configuration, bed type and operating conditions. Trace elements by themselves are not very volatile. Yet slag or ash particles from gasifiers seem to be significantly depleted in most of the trace elements in coal. In the high-temperature reducing atmospheres typical of gasifiers, trace elements thus, would seem to be volatilized in the form of compounds such as carbonyls, sulfides and hydrides. Those compounds condense in quench water.

While there are few data available on the fate of trace elements, a number of estimates have been based on data from Reference 1-11. Table 1-6 presents the results of a calculation based on such an estimate to determine the distribution of the elements between the slag and sour water. It is based on the assumption that the amount of each element not appearing in the ash will be found in the sour water. It shows that mercury, arsenic and cadmium go predominantly to the sour water and may require special care. It may be possible to utilize the sour water in the ash quenching process. If all the elements were to appear in the slag or ash, disposal might be simplified if guards against leaching are taken. As an example of the potential magnitude of the problem, should all of the nickel estimated to appear in the sour water be allowed to escape, it would require 3.6 million gallons per minute of water to dilute that element to the level of the EPC.

TABLE 1-6 POTENTIAL FATE OF TRACE ELEMENTS*

| Element | Feed | Flowrate (lb/hr) Final Residue | Sour Water | % in Residue/ % in Sour Water |
|---|---|---|---|---|
| Hg | 0.084 | 0.008 | 0.076 | 10/90 |
| As | 16.8 | 4.4 | 12.4 | 26/74 |
| Pb | 7.7 | 4.9 | 2.8 | 64/36 |
| Cd | 0.62 | 0.23 | 0.39 | 27/63 |
| V | 11.9 | 8.3 | 3.6 | 70/30 |
| Ni | 10.5 | 8.0 | 2.5 | 76/24 |
| Be | 0.70 | 0.57 | 0.13 | 81/19 |
| B | 140 | 126 | 14 | 90/10 |
| Cr | 10.5 | 10.5 | 0 | 100/0 |

*Based on a coal feed rate of 700,000 lb/hr

CONCLUDING REMARKS

The results of this study have updated prior work and have further strengthened the conclusion that the integrated gasification/sulfur cleanup/ combined-cycle power system will be one of the more environmentally and economically attractive medthods of generating electric power in the future.

Further work in the areas of the costs and performance penalities associated with deep sulfur removal (removal of significant amounts of COS) appears necessary. Also, it is important to recognize that an evaluation must be made of methods to remove fuel-bound nitrogen prior to combustion and of possible combustor modifications which might convert these compounds to $N_2$.

## REFERENCES


1-1. Robson, F. L., et al.: Technological and Economic Feasibility of Advanced Power Cycles and Methods of Producing Nonpolluting Fuels for Utility Power Stations. PB198-392, December 1970.

1-2. Harris, L. P., and R. P. Shah: General Electric Phase II Final Report - Open Cycle Gas Turbines and Open Cycle MHD. NASA CR-134949, Vol. II, Part 3, December 1976.

1-3. Beecher, D. T., et al.: Westinghouse Phase II, Final Report: Summary MV Combined Gas-Steam Turbine Plant with or Integrated Low-Btu Gasifiers. NASA CR-134942, Vol. I, November 1976.

1-4. Crozier, R., editor: Assessment of Technology for Advanced Power Cycles. Report of Ad Hoc Panel on Advanced Power Cycles, National Academy of Science, May 1978.

1-5. Robson, F. L., A. J. Giramonti, W. A. Blecher, and G. Mazzella: Fuel Gas Environmental Impact-Phase Report. EPA-600/2-75-078, (NTIS No. PB249-424), November 1975.

1-6. Robson, F. L., W. A. Blecher, and C. Colton: Fuel Gas Environmental Impact. EPA-600/2-76-153, (NTIS No. PB257-134), June 1976.

1-7. Chandra, K. B. McElmurry, E. W. Neben, and G. E. Pack: Economic Studies of Coal Gasification Combined Cycle Systems for Electric Power Generation. EPRI AF-642, January 1978.

1-8. Crouch, W. B., et al.: Recent Experimental Results on Gasification and Combustion of Low Btu Gas for Gas Turbine. ASME Turbine Conf., April 1974.

1-9. Crouch, W. B., and R. D. Klapatch: Solids Gasification for Gas Turbine Fuel, 100 and 300 Btu Gas. 11th Intersociety Energy Conversion Engineering Conference, September 1976.

1-10 Mosier, S. A., and R. M. Pierce: Advanced Combustion System for Stationary Gas Turbine Engines. Second Symposium on Stationary Source Combustion, New Orleans, August 1977.

1-11. Attari, A. J. Pau, and M. Mensinger: Fate of Trace and Minor Contaminants of Coal During Gasification. EPA-600/2-76-258, (NTIS No. PB270-913), September 1976.

## SECTION 2

## INTRODUCTION

Previous EPA-sponsored studies (References 2-1 and 2-2) at UTRC demonstrated the potential environmental and economic benefits of integrated coal gasification/gas cleanup/combined-cycle power plants. However, there remained several technical problem areas requiring investigation or further definition. One such area involved an expanded study of plant effluents including an examination of the possible fate of potentially hazardous trace elements. Another problem area was the comparison of integrated power plants using air-blown versus oxygen-blown gasifiers supplying fuel to the advanced power systems. To date, neither have been compared on a consistent basis using the latest data on gasifier performance and effluent discharges. A third area involved the use of advanced technology gasifiers such as the fluid bed and molten salt types which have the potential for higher integrated power plant performance, but which have not been well defined in the integrated power system mode from the technical, economic and environmental viewpoint. Also, to provide a better understanding of the basic capabilities and limitations of these advanced gasifiers, the modeling work done in the previous program phases needed to be extended to consider them. The current program addresses these areas in a manner consistent with the earlier work to provide a meaningful comparison of these gasifiers on both an environmental and economic basis when operating in an integrated power generating system using coal gasification and advanced combined gas and steam turbine cycles with fuel gas cleanup before combustion.

Prior investigations carried out under EPA Contract No. 68-02-1099 resulted in the major conclusion that integrated power plants using low-Btu coal gasification, fuel gas sulfur removal, and combined gas and steam cycle power generation offer the potential for reduced environmental intrusion while generating electric power at costs competitive with or less than conventional coal-fired stations with flue gas desulfurization. Coal processing systems studied in UTRC's prior work for the EPA included entrained-flow (BCR-type) and fixed bed (Morgantown Energy Reseach Center design, referred to herein as the BuMines gasifier) medium pressure (25-atm) gasifiers with both high- and low-temperature cleanup systems.

Each of the coal conversion processes was mated with a combined-cycle generating system for producing electric power. Additionally, systems utilizing existing technology such as the Koppers-Totzek atmospheric-pressure, oxygen blown coal gasifier, and the Shell or Texaco-type partial oxidation oil gasifier were studied. These studies are reported in References 2-1 and 2-2. For continuity, the results are summarized in the early sections of this report.

A further study consideration was the utilization of the latest data developed under the sponsorship of other agencies or by other contractors that could affect the conclusions of these previous studies. For example, gasifier modeling performed during the earlier EPA-sponsored studies had shown the advantages of low steam feed rates. Heat and mass balances available at that time were not optimized for integration with combined-cycle power generating systems. As yet unpublished data, made available by the Electric Power Research Institute (EPRI), substantiated that a marked performance improvement can be achieved by that relatively simple change in approach. Other programs, such as the High Temperature Turbine Technology Program sponsored by DOE have provided technological data regarding the potential for improved combined-cycle performance. Results from that and other ongoing programs have also served as a basis for the selection of the most economically attractive combined-cycle configuration consistent with current and predicted future coal prices.

Because of the importance of these issues to the electric power generating industry, EPRI has participated in this program by allowing the use of information generated under contracts sponsored directly by them. In substance, EPRI has provided process data on air- and oxygen-blown two-stage gasifiers and on advanced fluid-bed gasifiers. Many of these data were developed by Fluor Engineers and Constructors as part of an EPRI-sponsored study. That study, subsequently reported on in Reference 2-3, sought to identify whether significant economic and/or environmental incentives exist for using various current and advanced gasification processes coupled with combined-cycle power plants to produce electricity. The study did not explore in depth the environmental intrusion of these integrated power plants. However, it provided the latest available revisions of the respective gasifier operating conditions.

Fluor has also acted as a direct subcontractor to UTRC to provide process engineering in the areas of fuel gas cleanup, system integration, and effluent definition and control. Hittman Associates, who participated in the earlier study, has continued as a subcontractor to provide overall evaluation of the various discharges of air and water pollutants and solid wastes from the integrated plant. Allied Chemical Co. has provided performance and cost estimates for the Selexol desulfurization system and the Institute of Gas Technology has cooperated in studies aimed at reduced steam feed to the U-Gas gasifier. UTRC has provided power system characteristics and analysis, overall systems integration, and environmental intrusions.

In order to achieve the goal of comparing the environmental, performance and cost characteristics of integrated power plants having both low- and high-temperature sulfur cleanup processes, five program objectives were defined:

1. To provide a more detailed evaluation than was done in previous studies of the effluents from the integrated power plant and the control methods that could be applied.
2. To compare the operational, economic, and environmental characteristics of integrated power plants using oxygen vs. air-blown gasification in an entrained flow (BCR-type) gasifier with both high- and low-temperature cleanup.
3. To consider the merits of advanced gasifiers such as the fluid bed and the molten salt gasifiers when integrated with a combined-cycle power system.
4. To update previous work so that a meaningful comparison of performance, emissions, and cost can be made between the present and previous systems.
5. To utilize modeling techniques developed under previous contracts to identify the effect of gasifier operating parameters on overall system emissions and performance characteristics.

In carrying out these objectives, several other areas were uncovered that warranted investigation. Among these were: 1) the effect of operating temperature on the Selexol system performance and cost; 2) the performance of the fluid-bed gasifier at reduced steam feed rates; and 3) the use of nonselective, low-temperature desulfurization systems.

The conclusions from the study and recommendations for further work follow this introduction. Sections 5, 6 and 7 deal with the individual processes which make up the integrated gasification/sulfur cleanup/combined-cycle power plant. Subsequent sections describe the overall power plant integration, power plant air emissions and other environmental intrusion. A final section presents the performance and resultant cost of electricity for the integrated power plants.

## REFERENCES


2-1 Robson, F. L., A. S. Giramonti, W. A. Blecher, and G. Mezzella: Fuel Gas Environmental Impact: Phase Report. EPA-600/2-75-078, November 1975.

2-2 Robson, F. L., W. A. Blecher, and C. B. Colton: Fuel Gas Environmental Impact. EPA-600/2-76-153, June 1976.

2-3 Chaubra, K., B. McElmurry, E. W. Neben and G. E. Pack: Economic Studies of Coal Gasification Combined-Cycle Systems for Power Generation: Final Report. EPRI AF-642, January 1978.

## SECTION 3

## CONCLUSIONS

1. Revisions in gasifier and power system operational characteristics have resulted in lower integrated power plant heat rate and reduced emissions compared to the estimates made for similar integrated power plants in the prior UTRC studies carried out for the EPA.

2. The revised integrated power plants have become an even more attractive method for providing electricity at a lower cost with less environmental intrusion than a conventional steam plant with flue gas desulfurization.

3. Integrated power plants having oxygen-blown gasifiers with either low- or high-temperature sulfur cleanup appear to be less attractive than their air-blown counterparts. They exhibit higher heat rates, higher costs and the potential for higher emissions of $NO_x$.

4. For the integrated power plants studied having various advanced, air-blown gasification systems, little difference between power plants was noted in emissions, performance or generating cost when operating with low-temperature desulfurization and at low gasifier steam feed rates. Thus, gasifier selection may be based on other considerations.

5. Power plants with a high-temperature cleanup process, for which bench scale data only are available, have estimated performance and cost advantages over plants with low-temperature sulfur cleanup, for which process data are available. Careful design of plants with low-temperature cleanup can reduce these estimated advantages to marginal levels.

6. In high-temperature cleanup processes, the problems associated with efficient removal of particulates less than 10 μ and the removal or harmless conversion of nitrogen compounds in the fuel gas remain to be resolved. Until such systems can be better identified, associated cost and performance penalties cannot be accurately defined.

7. At the elevated fuel gas temperatures needed to attain highly efficient, integrated power plant operation, conventional gas turbine combustor designs would result in excessive $NO_x$ formation even with low-Btu gas. A premix burner offers the potential for off-stoichiometric combustion and greatly reduced $NO_x$.

8. For the selected low-temperature desulfurization system (Selexol), removal of sulfur to very low levels can double equipment cost if it is necessary to design for COS removal.

9. Any advantages in power plant performance or cost resulting from the use of an ambient temperature Selexol process rather than a refrigerated Selexol process are lost when sulfur removal below the level of 1.2 lb $SO_2/10^6$ Btu is desired.

10. Data needed to predict the fate of the numerous trace elements in the coal feed are scarce. While not definitive, it appears that water scrubbing of the fuel gas would be desirable in controlling the discharge of the compounds of these elements.

## SECTION 4

## RECOMMENDATIONS FOR FURTHER WORK

1. Further investigations are required to identify the cost and effect on overall power plant performance of sulfur removal to levels of 95 percent and beyond.

2. An investigation should be conducted to compare the effects of removing fuel-bound nitrogen prior to combustion with the effects of combustion modifications. Of interest are the amounts of nitrogen removed, the cost, effect on overall system performance and the reduction in nitrogen oxide emissions.

## SECTION 5

## OVERVIEW OF GASIFICATION AND CLEANUP PROCESSES FOR USE WITH COMBINED-CYCLE POWER PLANTS

### INTRODUCTION

The basic technology for production of low-Btu gas is available. Gasification has been in common use since the 1800's. A number of desulfurization processes have been developed for gas cleanup. These are designed for use in sweetening natural gas as well as in the cleanup of the various types of low-Btu or synthesis gas.

In addition to these existing processes, a number of advanced types are in various stages of development. In general, they are intended to provide for more efficient gasification of widely varying coal types while having increased throughput and consequently lower cost. This section presents a brief description of the basic types of gasifiers and cleanup processes that are potentially available and evaluates their applicability for use in combined cycle power generation.

#### System Arrangement

An integrated system is shown schematically in Figure 5-1. It shows the primary interconnections between the gas turbine, steam bottoming cycle and coal processing or gasification and cleanup system. The gasification process requires air which can be supplied from the compressor discharge of the gas turbine. Using this high pressure air permits pressurized operation of the entire fuel processing system. This is generally beneficial since it reduces component size and improves the performance of many desulfurization systems. Also, many gasification processes need steam which can be supplied by extraction from the steam cycle after having done some useful work. Low pressure steam can also be extracted for use in various parts of the cleanup process.

Because the gasification process takes place at elevated temperature, the vessel is generally cooled. Heat rejected there can be used to raise high-pressure steam for the steam cycle. Additional steam may be raised when cooling the hot fuel gas leaving the gasifier. This would be the case if a low-temperature cleanup process were to be used.

## BASIC GASIFICATION COAL COMBINED CYCLE POWER SYSTEM

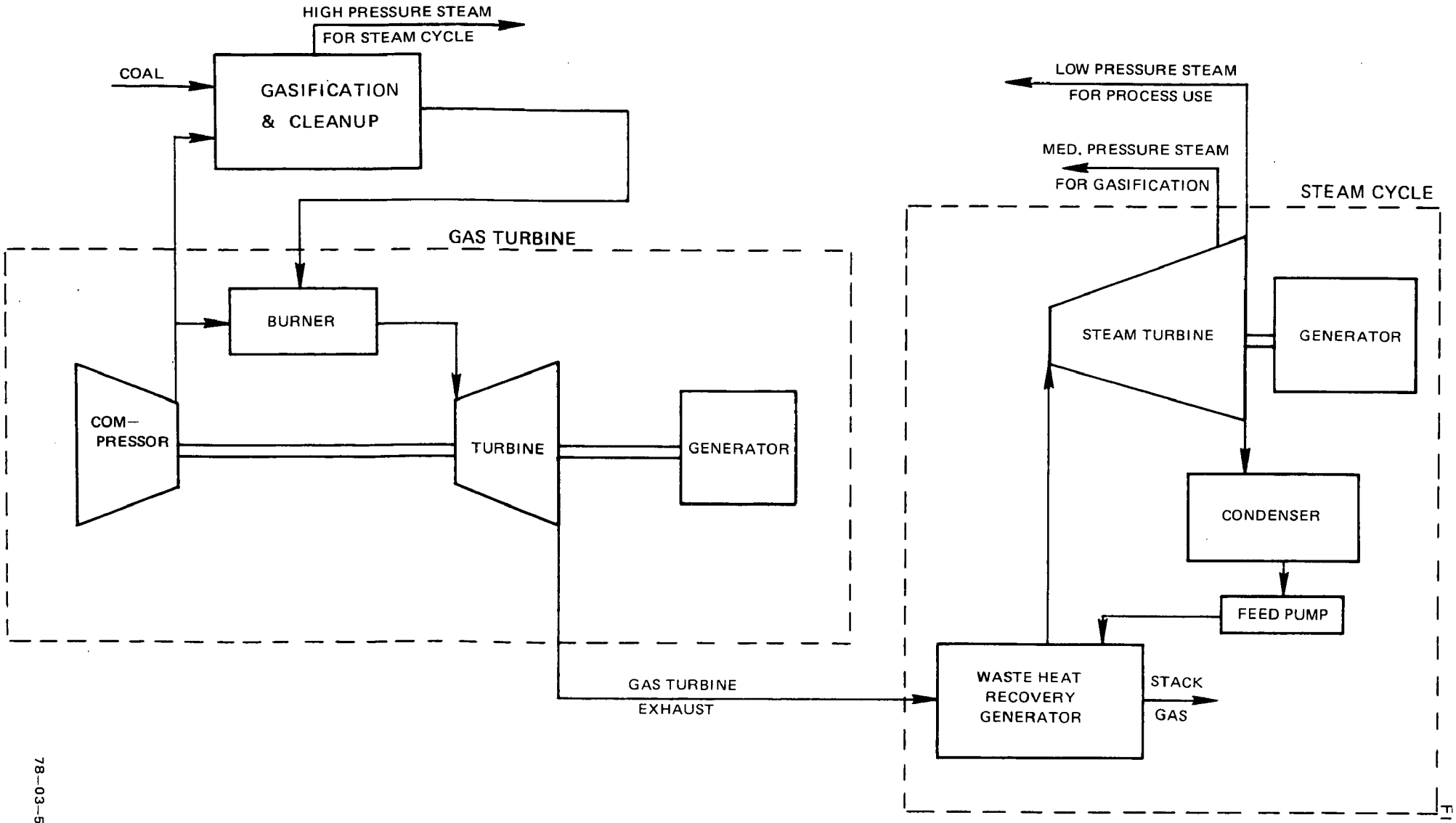


FIG. 5-1



78-03-54-1

The remainder of the plant is a conventional combined-cycle. Gas turbine exhaust is used to raise some steam for the steam turbine and to superheat that steam as well as that raised in the fuel processing system. The steam conditions are dependent on the available temperature levels and vary with gas turbine and fuel processing system parameters.

## Gasification and Cleanup

The fuel processing part of the power plant is shown in simplified form in Figure 5-2. It assumes the use of a low-temperature cleanup system. In the coal handling section, coal is processed as required by the gasifier. It is fed to the gasifier at ambient condition. The gasifier must include lock-hoppers or other devices to feed the coal to the gasifier at pressure. Steam and air are fed to the gasifier as required and jacket heat is used to generate high-pressure steam for the steam cycle. Ash removed from the gasifier may require cooling or other handling facilities not shown here.

Gas leaving the gasifier must be cooled to permit removal of ammonia, hydrogen sulfide and particulates, at least in the case of low-temperature systems. In the cooling process heat may be used to raise steam and/or to reheat the clean fuel gas. This is discussed in Section 8 under thermal integration.

The water scrub consists of a particulate removal section and a section designed for ammonia removal. The particulate slurry produced, in most cases, can be recycled through the gasifier. The sour water, containing ammonia, carbon dioxide and hydrogen sulfide, is processed to remove ammonia. The remaining gases are sent to the sulfur recovery unit.

Sulfur in the fuel gas is removed in the $H_2S$ absorber. The degree of sulfur removal and the amount of other gases absorbed differs among the various processes. These absorbed gases are stripped and sent to the sulfur recovery unit for recovery of elemental sulfur. While the degree of sulfur removal from the fuel gas is of prime importance, the amount of steam or power needed in the stripping operation and the concentration of $H_2S$ in the feed to the sulfur recovery unit are important in measuring performance of the desulfurization process.

# GASIFICATION

A high pressure, air-blown gasifier appears to be a logical choice for use with a combined cycle generating system. However, other types can be adapted and one goal of the current study is to compare the merits of air-vs. oxygen-blown operation.

## Chemical Reactions

In the production of low-Btu gas, the highest yield would be achieved if all of the carbon were converted to carbon monoxide and all hydrogen were released in the molecular form. In practice many competing reactions exist and

## GENERAL FUEL PROCESSING SCHEMATIC

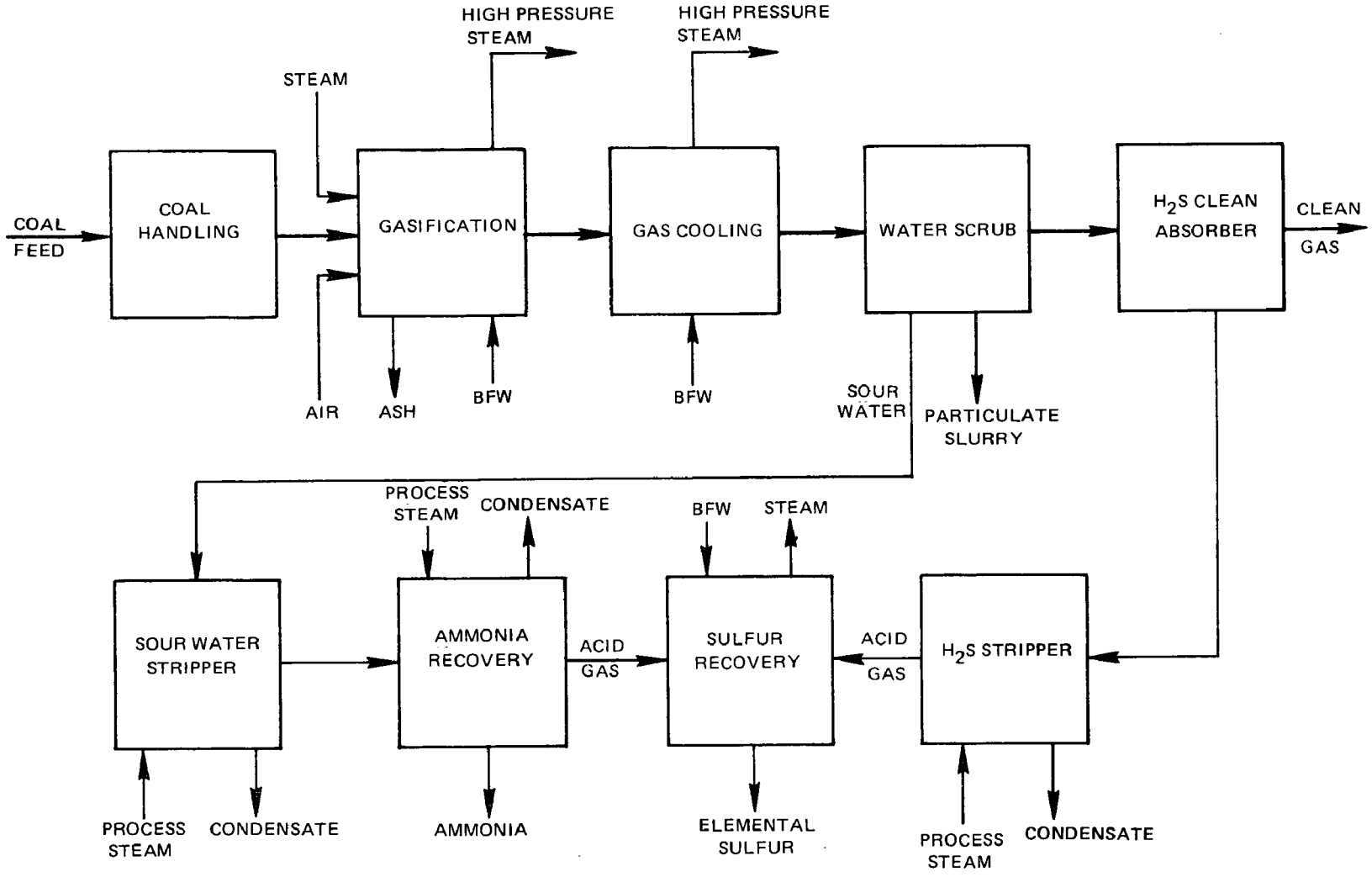


FIG. 5-2

both $CO_2$ and $H_2O$ are formed. The process is quite complex and can be viewed as a number of sequential reactions (Reference 5-1). First, some of the fuel is oxidized to form $CO_2$ and $H_2O$

$$C + O_2 \rightarrow CO_2 \tag{5-1}$$

$$2H_2 + O_2 \rightarrow 2H_2O \tag{5-2}$$

These reactions release a significant amount of heat which enables the highly endothermic gasification reactions to take place.

$$C + H_2O \rightarrow CO + H_2 \tag{5-3}$$

$$C + CO_2 \rightarrow 2CO \tag{5-4}$$

These are commonly known as the steam-carbon and Boudouard reactions. Boudouard equilibrium is generally used as a test for possible carbon formation. It determines the minimum $CO_2$ concentration.

In addition, methane can be formed by the reaction of hydrogen with carbon or carbon monoxide. Heating of the coal also results in devolatilization which produces carbon, methane and other hydrocarbons. At low temperatures, these hydrocarbons do not react and appear as heavy tars and oils in the gasifier product.

When these gases coexist at high temperature, equilibrium is generally determined by the water gas shift reaction,

$$H_2 + CO_2 \rightleftarrows H_2O + CO \tag{5-5}$$

which reaction is generally close to equilibrium.

Equilibrium concentration of methane can be calculated from the gas phase reaction:

$$CH_4 + H_2O \rightleftarrows CO + 3H_2 \tag{5-6}$$

However, measured concentrations are generally greater than would be predicted by equilibrium.

Formation of methane in the gasifier is of major importance when the objective of the gasification plant is to produce pipeline quality gas. When the production of fuel gas is the objective, the major consideration is the efficient conversion of the energy in the coal to chemical energy (heating value) of the product gas. This can be achieved with gas containing hydrogen and carbon monoxide as the major combustible components rather than methane.

Sulfur and Nitrogen Compounds--

Reactions involving sulfur and nitrogen are important from an environmental standpoint. Sulfur content of American coal varies widely. Western coals are generally low in sulfur while Eastern coals have relatively high sulfur content. Because of the reducing atmosphere in the gasifier, most of the sulfur is converted to hydrogen sulfide and carbonyl sulfide. The proportions of each are related by the reaction:

$$COS + H_2O \rightarrow CO_2 + H_2S \tag{5-7}$$

At equilibrium, $H_2S$ generally accounts for approximatly 95 percent of the total sulfur.

The conversion of coal nitrogen during gasification is more complex. Where oil and tar are produced, some of the nitrogen will appear in pyridine compounds. The remainder of the nitrogen will be converted to ammonia or molecular nitrogen. At high temperatures, some hydrogen cyanide may be formed.

Chemical Equilibrium--

Gasification processes vary greatly in the degree to which the reactions approach equilibrium. High-temperature and catalytic action within the gasifier result in a close approach to equilibrium. Sophisticated computational techniques are available to calculate the equilibrium concentration of virtually all potential products. The results of such a calculation are presented in Section 8 for the gasifiers studied under this contract.

## Oxygen vs Air-Blown Gasification

The basic feed streams needed for gasification are coal, steam and a source of oxygen. Most processes can be designed to run with either pure oxygen or air as the source of oxygen. Processes used in producing pipeline gas are oxygen-blown and use steam to generate hydrogen for methanation. When oxygen is used, reactions are sufficiently exothermic as to make the addition of steam necessary to keep the temperature within practical limits . With air, the nitrogen diluent provides a quenching effect and complete gasification can theoretically be achieved with minimal steam used to reduce reaction temperature. The role of steam is critical in combined cycle power generation and is addressed in Section 8.

The choice between oxygen and air is usually determined by the end use of the gas. Oxygen is required when pipeline or high-Btu gas is desired. There, the presence of nitrogen would be unacceptable. Where transportation and interchangeability with natural gas are not a requirement, then medium- and low-Btu gas can be considered. Oxygen-blown operation will produce a medium-Btu gas with a heating value in the range of 300 Btu/SCF. An example of the difference in composition is given in Table 5-1 for a BCR-type gasifier. For air-blown operation, a value of 150 Btu/SCF is typical since the nitrogen diluent accounts for approximately 50 percent of the product gas. The primary fuel constituents of both are hydrogen and carbon monoxide which each have a heating value of approximately 325 Btu/SCF.

TABLE 5-1

COMPARISON OF AIR- VS OXYGEN-BLOWN GASIFICATION

BCR-Type Gasifier

Coal - Illinois No. 6 - 700,000 lb/hr

| | AIR-BLOWN | | OXYGEN-BLOWN | |
|---|---|---|---|---|
| | Mols/Hr | Mol % | Mols/Hr | Mol % |
| $CH_4$ | 3,775 | 3.37 | 4,522 | 6.04 |
| $H_2$ | 15,315 | 13.68 | 22,098 | 29.50 |
| CO | 32,190 | 28.75 | 26,459 | 35.33 |
| $CO_2$ | 3,396 | 3.03 | 9,369 | 12.51 |
| $H_2S$ | 751 | 0.67 | 770 | 1.03 |
| COS | 76 | 0.07 | 77 | 0.10 |
| $N_2$ | 53,753 | 48.02 | 336 | 0.45 |
| $NH_3$ | 479 | 0.43 | 479 | 0.64 |
| $H_2O$ | 2,213 | 1.98 | 10,787 | 14.40 |
| | 111,948 | | 74,897 | |

| | | |
|---|---|---|
| HHV-Btu/SCF | 171.2 | 270.8 |
| Oxidant/Coal Ratio | 2.78 | 0.594 |
| Steam/Coal Ratio | 0.144 | 0.597 |
| Transport Gas/Coal Ratio | 0.088 | 0.088 |
| Cold Gas Efficiency | 83% | 85.7% |

When used as a fuel, the primary difference between low- and medium-Btu gas is the flame temperature. Because of the nitrogen diluent, the stoichiometric flame temperature of the low-Btu gas can be as much as 800 F lower than that of the medium Btu gas. Of interest is the fact that the stoichiometric flame temperature of methane or high-Btu gas is lower than that of medium Btu gas. Methane requires four times as much air as does an equivalent volume of CO or $H_2$ (the major constituents of medium-Btu gas) while having a heating value of just over three times that of those fuels.

Flame temperature can be very important when retrofitting existing industrial processes. For that purpose medium-Btu gas would be selected. Also, it has the advantage of being more economically transported. However, in the gas turbine, flame temperature is not important, in fact the high flame temperature associated with medium-Btu gas may result in a $NO_x$ problem discussed in Section 9, and selection can be based on other factors.

Air-blown operation is generally favored because oxidant for the gasification process can be bled from the gas turbine compressor. The nitrogen is returned to the gas turbine with the fuel gas and produces useful work as it is expanded through the turbine. Oxygen-blown operation requires a separate oxygen compressor in addition to an air separation plant. It does, however, result in smaller cleanup equipment size since the fuel gas volume is approximately half that of the air-blown system. This, plus the possible synergism of industrial utilization of the fuel gas, could make the oxygen-blown gasifie a viable alternative.

Types of Gasifiers

While the reactions are common to all gasifiers, i.e., partial combustion followed by reducing type reactions, the means of achieving them differ widely. Gasifiers can be classified in four main categories:

(a) Moving Bed
(b) Fluidized Bed
(c) Entrained Bed
(d) Molten Bath

Within each category, gasifier characteristics can vary due to operating conditions (temperature and pressure), method of coal feeding, method of ash removal and other important aspects. However, it is a convenient categorization and represents a primary design difference between the processes.

Moving Bed Gasifier--

This category is typified by the Lurgi gasifier although, in this report data for the Bureau of Mines stirred bed gasifier have been used. It is sometimes referred to as a "Fixed Bed" as it involves a bed of coal supported by a grate. Oxidant and steam are introduced below the grate and move rather slowly up through the bed. Product gas is removed from the top while ash is discharged at the bottom.

Combustion temperature in "dry bottom" operation is controlled to below the ash fusion point. Temperature of the gas leaving the top of the unit is approximately 1000 F. Because of the relatively low temperatures, the effluent gas contains significant amounts of condensible oil and tar vapors. As a result, the gas is usually quenched with water to condense and remove these constituents. This is a major disadvantage in combined-cycle operation since most of the sensible heat in the off-gas is lost.

The process is sensitive to type and size of the coal feed. Caking coals tend to form clinkers and a stirring device is provided to break up any lumps that may form. Fines are undesirable and must be briquetted or used elsewhere. Coal is fed by lock-hopper. The high coal inventory in the gasifier provides stability against variations in coal flow and composition.

A recent advance in moving bed gasifiers, which is now in the development stage, is the "slagging" mode of operation. In this operation, the gasifier is oxygen-blown and the combustion zone is controlled at a temperature which is above the melting point of the ash. Ash is removed from the gasifier in molten form. This type of operation reduces the steam requirement and increases the gasification rate relative to "dry bottom" gasifiers.

Fluidized Bed Gasifier--

As the name implies, solids in the gasifier are suspended in a fluid state by an upflow of gas through the gasifier. As is characteristic of a fluidized bed, temperature is quite uniform and there are no hot spots. Thus, temperatures can be maintained below the ash fusion point while being high enough to minimize tars and oils in the off-gas (generally 1600-1800 F). However, this is a problem in many fluid bed concepts. Also, since there must be a considerable carbon inventory, ash disposal is a problem. The fluid bed is well mixed and ash removal is a matter of extracting a part of the well-mixed bed. As a result, the ash removal stream contains a substantial amount of unreacted carbon.

A problem common to gasifiers of this type is the inability to use strongly caking coal without pretreatment. However, they are tolerant to variations in coal size and require less coal processing equipment.

Many of the problems associated with fluidized bed gasification are claimed to be eliminated in the ash-agglomerating gasifier under development at IGT. Relatively low amounts of carbon are contained in the ash and no tar is expected in the off-gas. Operation of that gasifier is described in Section 6.

Entrained Flow Gasifiers--

Gasification by means of an entrained flow process involves suspension of relatively small coal or coal char particles in a high velocity gaseous medium Residence time of the coal particles in the gasifier is relatively low and high temperatures are used to maximize gasification rate. As a result, entrained flow gasifiers operate under ash slagging conditions.

The atmospheric pressure Koppers-Totzek (K-T) gasifier is probably the best working example of a single-stage entrained flow process. It is oxygen-blown and reaction temperature is in excess of 2600 F. The high temperature results in high reaction rates and the off-gas is reported to be very close to equilibrium. The coal feed is pulverized and the gasifier is not affected by the use of caking coals. Application of the K-T process to combined cycle power generation is discussed in Section 6.

In a two-stage entrained flow gasifier, coal is injected into an upper stage where it is partially gasified by hot gases produced in the lower stage. Gas and char leave the upper stage at a temperature near 1800 F. Char is separated from the gas and injected into the lower stage together with steam and an oxygen containing gas. The char is partially combusted at temperatures of 2800 to 3000 F. Molten ash slag is separated from the gases formed and is removed from the bottom of the lower stage.

As with the single-stage gasifier, any grade of coal can be used since the pulverized particles are in the reaction zone. The carbon content in the ash is quite low because of the high reaction temperature. The capacity of entrained flow gasifiers is much higher than that of moving or fluidized bed gasifiers since the flow is not restricted by bed characteristics.

Molten Bath Gasifiers--

In this type of process, the reactants are contacted in a high temperature molten fluid. The melt serves to disperse the reactants and provides heat transfer and thermal storage for the process. It can also have a catalytic effect on gasifier reactions and/or combine chemically to remove sulfur from the product gas. As in the entrained flow process, the gasifier can handle all types of coal. It has the additional advantage of being relatively insensitive to coal size, thus reducing the processing requirements. Ash is withdrawn with the melt (the ash forms the molten bath in some cases) and contains on the order of 1 percent unreacted carbon.

Gas leaving the process is free of tars but may contain vapors from the melt. In the case of a molten salt type gasifier, the vapors could be harmful and provision must be made to insure their removal.

CLEANUP SYSTEMS

Fuel gas cleanup systems consist of processes for sulfur removal, nitrogen compound (ammonia) removal, and particulate removal. Sulfur removal processes are generally divided into two categories. These are:

1) Low-temperature desulfurization
2) High-temperature desulfurization

Low-temperature desulfurization processes require cooling of the dirty gas and operate at temperatures below 250 F. At these temperatures, it is possible to use water as a means of particulate and ammonia removal. High-temperature

desulfurization processes operate at or near gasifier exit conditions and their use will require other means of nitrogen and particulate control. Control of nitrogen and particulates in systems with high-temperature desulfurization is discussed in Section 8.

Low-Temperature Desulfurization Processes

Low-temperature processes for desulfurizing raw producer gas are commercially available and have been widely used for natural gas sweetening and treating synthesis gas in the chemical process industry; e.g., the manufacture of ammonia, methanol and oxo-alcohols. These systems normally operate below 250 F and are commonly classified into the following categories:

Chemical Solvent Processes
Physical Solvent
Direct Conversion Processes
Dry Bed Processes

A literature survey resulted in a list of 38 low-temperature processes. A summary of the important characteristics of some representative processes is given in Table 5-2. Figure 5-3 illustrates the schematic for a tyical absorption - stripping process for low-temperature acid gas removal.

Chemical Solvent Processes--

Chemical solvent processes employ aqueous solutions of organic and/or inorganic agents which are capable of forming "complexes" with the acid gas components, notably $H_2S$ and $CO_2$, present in the raw gas stream. The absorption solution is regenerated by decomposing the "complex" at elevated temperature thereby releasing the acid gases for subsequent recovery. The solution is recycled for further absorption. These processes are essentially insensitive to the partial pressure of acid gases in the feed and generally exhibit little or no selective absorption of $H_2S$ over carbon dioxide. The chemical processes may be sub-divided into those using amine scrubbing solutions and those based on alkali scrubbing solutions.

The principal reactions involved in gas sweetening with amine solutions (10-30 percent weight) may be represented as:

$$RNH_2 + H_2S \rightarrow RNH_3\ HS \qquad (5\text{-}8)$$

$$RNH_2 + CO_2 + H_2O \rightarrow RNH_3\ HCO_3 \qquad (5\text{-}9)$$

Monoethanolamine (MEA) will easily reduce the $H_2S$ content below 4 ppm; however, it is not considered selective, even though the rate for $CO_2$ absorption is less than for $H_2S$. The principal disadvantage of MEA is that it will react with COS and $CS_2$ forming nonregenerable compounds. Diethanolamine (DEA) will not react with these contaminants and is favored for service where

TABLE 5-2

LOW TEMPERATURE CLEANUP PROCESSES

Basis: 8400 tons/day Illinois No. 6 Coal Fed to BCR Gasifier, or 6700 ppm of Influent $H_2S$

| Process | Absorbent | Type of Absorbent | Temp. °F | Pressure | Efficiency of S Removal | | Absorbent Characteristics | | | | Form of Sulfur Recovery | Status |
|---|---|---|---|---|---|---|---|---|---|---|---|---|
| | | | | | % $H_2S$ Influent | Effluent $H_2S$ ppm | Life | Regeneration | Selectivity toward | Make up rate | | |
| **Chemical solvent type** | | | | | | | | | | | | |
| 1. MEA | Monoethanolamine | Aqueous solution | 80 to 120 | Insensitive to variation in pressure | 99 | ~100 | | Thermal | Forms non-regen. comp. with COS, $CS_2$ | 50 to 100% | As $H_2S$ gas | Commercial |
| 2. DEA | Diethanol amine | Aqueous solution | 100 to 130 | Insensitive to variation in pressure | 99 | ~100 | | Thermal | Absorbs $CO_2$, does not absorb COS, $CS_2$ | < 5% | As $H_2S$ gas | Commercial |
| 3. TEA | Triethanolamine | Aqueous solution | 100 to 150 | Insensitive to variation in pressure | 99 | ~100 | | Thermal | $H_2S$ | < 5% | As $H_2S$ gas | Commercial |
| 4. Alkazid | Potassium dimethyl amino acetate | Aqueous solution | 70 to 120 | Insensitive to variation in pressure 1 - 80 atm | 99 | ~100 | | With steam | $H_2S$ | | As $H_2S$ gas | Commercial |
| 5. Benfield | Activated potassium carbonate solution | Aqueous solution | 150 to 250 | | 99 | $H_2S$ + COS ~100 | Unlimited No degradation | With steam | $H_2S$ is high | | As $H_2S$ gas | Commercial |
| 6. Catacarb | Activated potassium carbonate solution | Aqueous solution | 150 to 250 | Insensitive to variation in pressure generally > 300 psi | 99 | $H_2S$ + COS ~100 | | With steam | $H_2S$ - partial also absorbs COS, $CS_2$ | < 5% | As $H_2S$ gas | Commercial |
| **Physical solvent type** | | | | | | | | | | | | |
| 7. Sulfinol | Sulfolane + Dilsopropanoamine | Organic solvent | 80 to 120 | High pressure preferred | 99 | $H_2S$ + COS ~100 | | Low pressure heating or with steam | $H_2S$, and also absorbs COS, $CS_2$ and mercaptans | | As $H_2S$ gas | Commercial |
| 8. Selexol | Polyethylene glycol ether | Organic solvent | 20 to 80 | | 99 | $H_2S$ + COS ~100 | | | $H_2S$ also absorbs COS | | As $H_2S$ gas | Commercial |
| 9. Rectisol | Methanol | Organic solvent | < 0 | | 99 | ~100 | | | $H_2S$ | | | Commercial |
| **Direct conversion** | | | | | | | | | | | | |
| 10. Stretford | $Na_2CO_3$ + anthraquinone sulfonic acid | Alkaline solution | | | 99.9 | ~10 | | | $H_2S$ | 50 to 100% | Elemental sulfur | Commercial |
| 11. Townsend | Triethylene glycol | Aqueous solution | 150 to 250 | | 99.9 | ~10 | | | $H_2S$ | | Elemental sulfur | |
| **Drybed type** | | | | | | | | | | | | |
| 12. Iron sponge | Hydrated $Fe_2O_3$ | Fixed bed | 70 to 100 | | 99 | $H_2S$ + COS ~100 | | | $H_2S$ and also towards COS, $CS_2$ and mercaptans | | Elemental sulfur | Commercial |

## TYPICAL LOW–TEMPERATURE ACID GAS REMOVAL UNIT

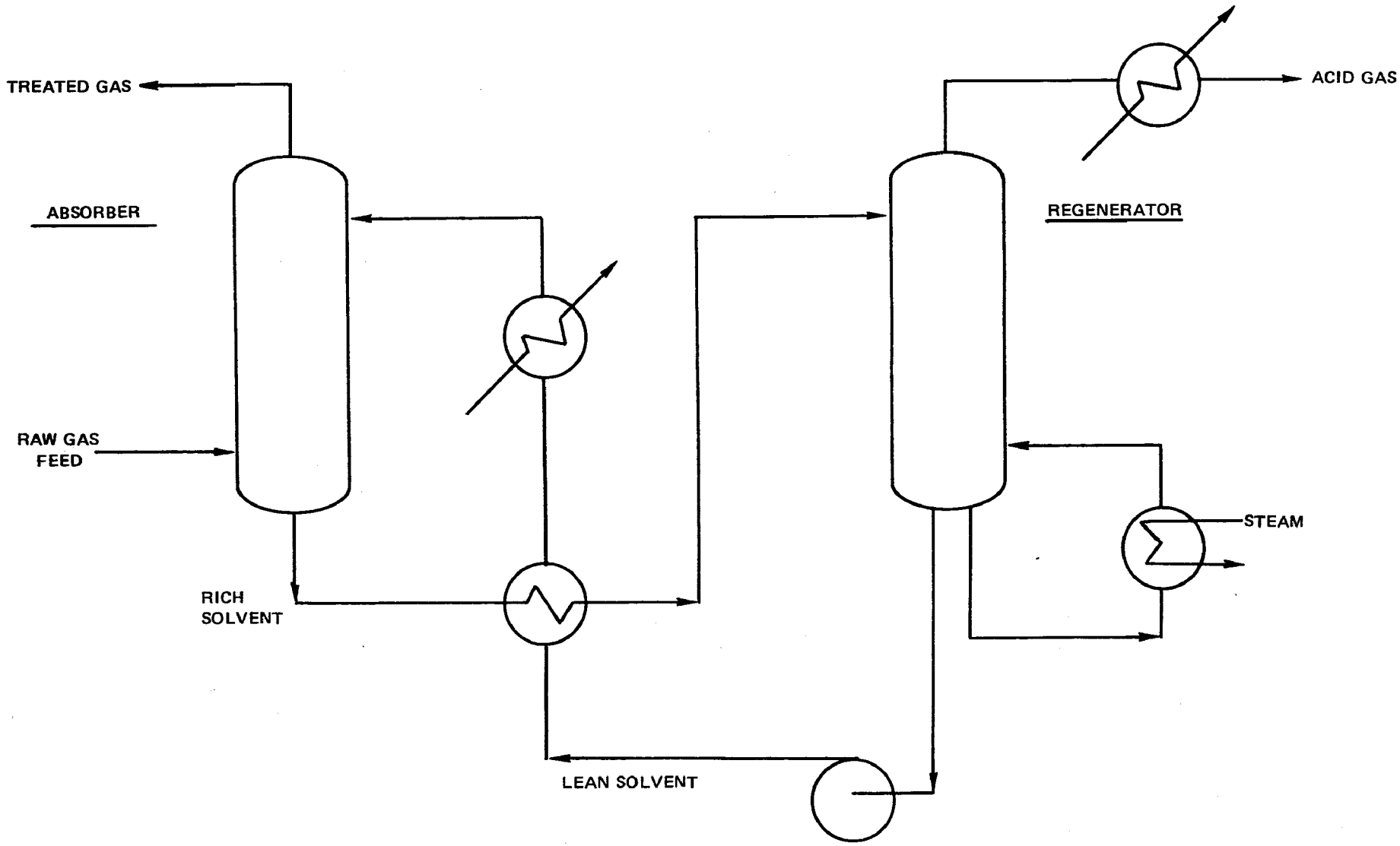


FIG.5–3

COS and $CS_2$ are likely to be present. Like MEA, DEA solutions are not selective for $H_2S$ and will seldom reduce the $H_2S$ content below 100 ppm. Tertiary amines, such as triethanolamine and methyl-diethanolamine, while not as reactive as the other amines, have the advantage of being selective towards $H_2S$ removal. The tertiary amines are two to four times more costly and find little application in industrial gas sweetening.

The alkali scrubbing system may be represented by the following chemical reactions:

$$M_2CO_3 + H_2S \rightarrow MHS + MHCO_3 \qquad (5\text{-}10)$$

$$M_2CO_3 + CO_2 + H_2O \rightarrow 2\ MHCO_3 \qquad (5\text{-}11)$$

A number of processes have been based on these reactions, the Benfield and Catacarb representing the most advanced versions.

The earlier processes, such as Seaboard and Vacuum Carbonate, were based on dilute solutions of sodium carbonate (3-4 percent weight) and were capable of removing 80-90 percent of the $H_2S$. Regeneration in the Seaboard process was by air resulting in a dilute acid gas stream while the Vacuum Carbonate system used vacuum regeneration with steam. These processes were superseded by the hot potassium carbonate system. In the "hot pot" processes, an aqueous solution of 25-35 weight percent $K_2\ CO_3$ is used to absorb acid gases at temperatures in the range of 200-250 F. With low $H_2S/CO_2$ ratios, the process is capable of sweetening the gas to 5 ppm. Some selective $H_2S$ absorption can be achieved by taking advantage of the relatively slow rate for $CO_2$ absorption. In addition to removing $H_2S$ and $CO_2$, the process can remove COS and $CS_2$ by hydrolysis of these components to $CO_2$ and $H_2S$. The Catacarb and Benfield processes are improved versions of the Bureau of Mines "hot pot" systems. They employ activators to increase the rate of absorption thereby decreasing the required solution circulation rate. Disadvantages of the hot potassium carbonate systems are the relatively high steam consumption for regeneration, sensitivity to operating pressure and possible inability to handle mercaptans and thiophene.

Not listed in Table 5-2, the tripotassium phosphate process was developed by the Shell Oil Company specifically for $H_2S$ removal via the reaction:

$$K_3PO_4 + H_2S \rightarrow K_2HPO_4 + KHS \qquad (5\text{-}12)$$

The nonvolatility of the agent, its nonreactivity with COS and $CS_2$, and partial selectivity toward $H_2S$ in the presence of $CO_2$ gives it certain advantages over the amine systems. However, when operated for high $H_2S$ selectivity, the process only gives about 90 percent removal efficiencies. Conversely, with high $H_2S$ removal the steam consumption becomes excessive due to $CO_2$ absorption.

Physical Solvent Processes--

Physical solvent processes all use organic solvents to remove acid gases. The physical absorption is directly proportional to the partial pressure of the acid gas components. These processes are most applicable to high-pressure gas treating where appreciable quantities of sour gases are present. After absorption, the "loaded" solvent is regenerated by heat and/or pressure reduction giving a concentrated stream of $H_2S$ plus $CO_2$ and a recyclable lean solvent. Due to the higher solubility of $H_2S$ in these organic solvents, selective absorption of $H_2S$ over $CO_2$ can be achieved. In general, these processes have two major disadvantages: the solvents have a great affinity for absorbing heavy hydrocarbons ($C_5$+) which contaminate the gas stream fed to sulfur recovery units; and the solvents are quite expensive so that large solvent losses cannot be tolerated.

As a group, these processes were developed for bulk removal of acid gases but, for low $H_2S$ concentration, they are capable of giving a sweetened gas having less than 5 ppm $H_2S$. In order to maximize the solubility of acid gases and minimize solvent loss through vaporization, the processes are generally operated at or below ambient temperature. In addition to removing $H_2S$ and $CO_2$, the solvent processes are all capable of removing COS, $CS_2$ and mercaptans without solvent degradation. They also dehydrate the gas to a low dew point. The low heats of solution for acid gases result in appreciably lower steam requirements for solvent regeneration compared to steam requirements for the chemical solvents.

The Sulfinol process is unique in that it combines the characteristics of a solvent process and an amine process. The physical absorbent, Sulfolane, gives high acid gas loadings at high acid gas partial pressures, giving it bulk removal capacity and the chemical absorbent, DIPA*, reduces residual acid gases to very low values. However, the presence of the chemical solvent reduces the $H_2S$ selective $H_2S$ absorption capability for this system compared to the straight solvent processes.

Direct Conversion Processes--

Two types of processes fall into this category:

a. those based on oxidation reduction reactions, and

b. those based on the stoichiometric reaction of $H_2S$ with $SO_2$ in the presence of a solvent.

The first type involves the absorption of $H_2S$ in alkaline solutions containing oxygen carriers. The $H_2S$ is subsequently oxidized to elemental sulfur by air fed to the regenerator. There the sulfur product is flotated and collected as a froth at the regenerated solution interface. Processes of this type are in common use in Europe for removal of $H_2S$ and sulfur recovery from manufactured gases and coke-oven gas. The Ferrox and Manchester processes

* di-isopropanolamine

employ a suspension of iron oxide in an aqueous solution of sodium carbonate to absorb $H_2S$. With multistage absorption, essentially complete removal of $H_2S$ is obtainable; however, the product is of low quality due to salt contamination. Chemical replacement costs are high. Both the Thylox and Giammarco Vetrocoke (References 5-2, 5-3) processes use alkaline solutions of arsenates and are capable of reducing the $H_2S$ to less than 1 ppm. Partial removal of COS, $CS_2$, and mercaptans is also possible. Again the sulfur product is contaminated and the use of arsenates makes these processes potentially hazardous The Stretford and Takahax processes are similar in that alkaline solutions of quinone sulfonic acids are employed. The addition of vanadium salts increase the rate of oxidation of hydrosulfide to sulfur resulting in higher solution loadings. Close to 100 percent $H_2S$ removal is claimed for these processes as is a high purity (99%) sulfur product. However, substantial amounts of thiosulfates are formed resulting in sludge deposition and corresponding chemical makeup.

Generally speaking, the low solution loadings exhibited by this group of processes make them uneconomical for treating large volumes or very sour gas streams. They are best suited for sour gases containing less than 1.0 percent $H_2S$ with sulfur production under 20 tons/day. These processes, as well as those in the following group, are almost totally selective for $H_2S$ removal.

In the second group of direct conversion processes are those in which $H_2$ is absorbed in a solvent and converted to elemental sulfur by the Claus type reaction with $SO_2$.

$$2\ H_2S + SO_2 \rightarrow 3\ S + H_2O \tag{5-13}$$

The Townsend process uses an aqueous solution of an organic solvent, such as triethylene glycol, to sweeten the gas, dehydrate the gas and convert $H_2S$ to elemental sulfur. A portion of the product sulfur is burned to $SO_2$ which is absorbed by fresh solvent and the $SO_2$ rich solvent is used to contact the sour gas. The IFP, Nalco, and Deal processes operate in a similar manner employing other solvents. While a high purity (99.7%) sulfur product is claimed, none of these processes have been commercialized.

Dry Bed Processes--

These sweetening processes are based on absorption of acid gases by a fixed bed of solid absorbent. Due to their low absorbent loading, they are applicable to gases containing low concentration of $H_2S$ and mercaptans, perhaps less than 500 ppm. These processes can be subdivided into the iron oxide processes and the various molecular sieve processes.

The iron oxide or dry box process is one of the oldest processes known for removing sulfur compounds from industrial gases. In the iron sponge systems, wood shavings impregnated with hydrated ferric oxide are used to absorb $H_2S$:

$$2\ Fe_2O_3 + 6\ H_2S \rightarrow 2\ Fe_2S_3 + 6\ H_2O \tag{5-14}$$

Regeneration of the absorbent is carried out with air:

$$2\ Fe_2S_3 + 3O_2 \rightarrow 2\ Fe_2O_3 + 6S \qquad (5\text{-}15)$$

This process is best suited for small to medium gas volumes with low sulfur contents; otherwise the sponge bed life would be too short to be economical. The process is selective towards $H_2S$ and mercaptans and will partially remove COS and $CS_2$. Sweetened gas of less than 5 ppm $H_2S$ is easily obtained However, sulfur recovery would not be economical when using the iron sponge system.

Molecular sieves can be made to have pore sizes which will permit selective absorption of $H_2S$ over $CO_2$. These processes are characterized by the various regeneration schemes employed; i.e., via hot combustion gases, hot $SO_2$ gas as in the Haines process, or hot air. In the latter two modes, elemental sulfur is produced via the oxidation of the absorbed $H_2S$. The sieve processes also appear to be economically attractive for small to medium gas volumes having low $H_2S$ content. Additionally, for efficient $H_2S$ removal, the raw sour gas should have a water content below 20 lb/MMSCF since water will also be absorbed by the molecular sieve structure.

Selection Considerations--

Low-temperature desulfurization systems for application in low-Btu fuel gas plants will have to treat large volumes of sour gas, 500-1000 MMSCFD, having total sulfur content in the range of 0.4 to 1.0 percent by weight. In addition to $H_2S$, the raw gas will contain $CO_2$, COS, $CS_2$, probably mercaptans, cyanides and heavy hydrocarbons. Of the types of processes described above, it is evident that the liquid scrubbing processes using physical solvents and some chemical solvents are the best suited. These processes are currently available and can easily reduce the sulfur content of the gas to 100 ppm. Such a gas, when combusted, would result in $SO_2$ emissions well below present EPA regulations for conventional steam stations. As such, these processes are capable for serving both first-generation and second-generation coal gasification plants and should meet any future regulations for $SO_2$ emissions.

## High Temperature Cleanup Systems

High-temperature systems for sulfur removal are not presently available in commercial scale although there are several in various stages of development. Active work involves use of limestone and dolomites which have potential in the range of 1500-2000 F. Other systems receiving attention employ iron oxides, molten salts, and liquid metals. These systems operate by chemical reaction of the absorbent with sulfur compounds in the gas, forming the corresponding metal sulfides. The degree of desulfurization attainable depends in part on the chemical equilibria for the particular system at the operating conditions. As with low-temperature processes, economics dictate that the sulfided absorbent be regenerated for reuse.

The only commercial experience with high-temperature desulfurization reported in the literature is that of the Frodingham Desulfurization Process (Refs. 5-4, 5-5). This process employed fluidized beds of pulverized iron oxide operating at 650 F to 800 F. In the early 1960's, a commercial plant treating 32 MMCFD of crude coke oven gas containing 1.0 percent $H_2S$ was operated at the Exeter Works of the South Western Gas Board. Essentially complete (99.9%) removal of $H_2S$ was achieved with 90 percent removal of all organic sulfur compounds other than thiophene. The sulfided absorbent was regenerated with air at 1000-1100 F resulting in a $SO_2$ stream which was subsequently converted to sulfuric acid. Major difficulties were experienced in the solids handling system which produced fine oxide dust resulting in excessive losses of the absorbent. In addition, operation of the sulfuric acid plant was erratic due to low $SO_2$ concentrations in the regenerator off-gas.

Several processes currently under development which may prove commercially viable for use with second generation gasification systems are listed in Table 5-3.

Bureau of Mines Sintered Iron Oxide Process-- (References 5-6, 5-7, 5-8, 5-9.)

This process, under development at the Morgantown Energy Research Center, is based on a sintered absorbent consisting of a mixture of iron oxide ($Fe_2O_3$) and fly ash. This sorbent satisfied the primary requirements for high-temperature sulfur removal in that it is readily available and inexpensive, it has reasonable absorption capacity for sulfur, can be regenerated for repeated use and is resistant to fusion and disintegration over the operating temperature range of 1000-1500 F. The absorbent is prepared by mixing iron oxide with "as received" fly ash to a total iron oxide content of about 35 percent. Iron oxide contents above 40 percent were unsatisfactory because the fusion temperature was lowered within the operating range. The mixture is extruded into 1/4" x 3/8" pellets and then sintered to develop the required hardness.

Reaction chemistry is reported in Reference 5-7 as follows. During absorption, two iron sulfides are produced, FeS and $FeS_2$, with the empirical composition approaching $FeS_{1.5}$:

$$Fe_2O_3 + 3H_2S \rightarrow 2Fe_{1.5} + 3H_2O \qquad (5\text{-}16)$$

During regeneration, air oxidizes the $FeS/FeS_2$ to $Fe_2O_3$ and $SO_2$.

$$6FeS_{1.5} + 13O_2 \rightarrow 2Fe_3O_4 + 9SO_2 \qquad (5\text{-}17)$$

$$2Fe_3O_4 + 1/2\ O_2 \rightarrow 3Fe_2O_3 \qquad (5\text{-}18)$$

Excess oxygen in the air from the reaction that produces the $Fe_3O_4$ converts it to $Fe_2O_3$.

TABLE 5-3

HIGH TEMPERATURE CLEANUP PROCESSES

Basis: 8400 tons/day Illinois No. 6 Coal Fed to BCR Gasifier, or 6700 ppm of Influent $H_2S$

| Process | Absorbent | Type of Bed | Temp. °F | Pressure | Efficiency of S Removal | | Absorbent Characteristics | | | | Form of Sulfur Recovery | Energy Required | | Status |
|---|---|---|---|---|---|---|---|---|---|---|---|---|---|---|
| | | | | | % $H_2S$ Influent | Effluent $H_2S$ ppm | Life | Regeneration | Selectivity toward | Make up rate | | Elec. kw | Other stu | |
| 1. Bureau of Mines | Sintered pellets of $Fe_2O_3$ (25%) and fly ash | Fixed bed | 1000 to 1500 | Insensitive to variation in pressure | ~95 | ~350 | >174 cycles Wt loss < 5% | With air | $H_2S$, COS | <5% | As $SO_2$ gas | | | Pilot |
| 2. Babcock and Wilcox | $Fe_2O_3$ | Fixed bed | 800 to 1200 | Insensitive to variation in pressure | ~99 | ~75 | | | | | As 12-15% $SO_2$ gas | | | Experimental |
| 3. CONOCO | Half calcined dolomite | Fluidized bed | 1500 to 1800 | ~200 psia $H_2S$ removal is high at low pressure | ~95 | ~350 | | 10-13% with steam and $CO_2$ | $H_2S$, COS | 1% of circulation rate | As $H_2S$ gas to Claus process | 96.360 | | Pilot |
| 4. Air products | Calcined dolomite | Fixed bed | 1600 to 2000 | Insensitive to variation in pressure | | | minimum 5-6 cycles | 80-90% with steam and $CO_2$ | $H_2S$, COS | | As $H_2S$ gas to Claus process | | | Abandoned |
| 5. Battelle Northwest | Molten carbonates (15% $CaCO_3$) | Solution | 1100 to 1700 | Atmospheric $H_2S$ removal is high at low pressure, 5-6 psig | ~95 | ~350 | | With steam and $CO_2$ | $H_2S$, COS, fly ash | | As $H_2S$ gas to Claus process | | | Pilot |
| 6. IGT - Meissner | Molten metal (proprietary) | Splashing contact | 900 | | ~98 | ~150 | | Electrolytic | $H_2S$, COS | | | 9830 | | Conceptual |

A practical problem during regeneration is the burnup of accumulated carbon deposits within the bed. This produces locally high temperatures that tend to harm the absorbent. Recent reports indicate that the fly ash can be replaced by silica to produce a more rugged material.

Concern over the possible absorption of hydrogen or the conversion of hydrogen and carbon monoxide to water and carbon dioxide by reaction with the ferric oxide is expressed in Reference 5-10. Equilibrium calculations indicate the potential for high sulfur removal levels, especially at low steam feed rates. Carbonyl sulfide absorption also appears to be practical.

An area that has not been investigated is the potential effect of the iron oxide bed on ammonia in the fuel gas. It is possible that it will catalyze the decomposition of ammonia which is generally assumed to be present in concentrations well in excess of those at equilibrium. This could be a very attractive feature since the presence of ammonia and consequent $NO_x$ production is a major drawback in high-temperature desulfurization.

Conoco Half Calcined Dolomite Process--

This process (Reference 5-11) evolved as an adaption of the $CO_2$ Acceptor Process (Reference 5-12) for producing low-Btu fuel gas from coal and incorporates the use of a half-calcined dolomite acceptor for sulfur capture as studied by Squires and coworkers (References 5-13 to 5-16). Basically the process chemistry involves the following reaction:

$$[CaCO_3 \cdot MgO] + HS_2 \rightarrow [CaS \cdot MgO] + HO_2 + CO_2 \qquad (5\text{-}19)$$

A maximum operating temperature for this process is imposed by the partial pressure of carbon dioxide in the gas phase; i.e., the temperature should not exceed that at which the $CO_2$ partial pressure is equal to the decomposition pressure for $CaCO_3$ via the following endothermic reaction:

$$CaCO_3 \rightarrow CaO + CO_2 \qquad (5\text{-}20)$$

Should that temperature be exceeded, $CO_2$ would be released into the clean fuel gas and the regeneration of the unreacted CaO will make the process more complex. The effect of this temperature limitation on desulfurization performance is discussed in Section 8 where the various factors are quantified.

Although no data have been reported for COS adsorption by half-calcined dolomite, high COS removal efficiencies are predicted thermodynamically according to the reaction:

$$[CaCO_3 \cdot MgO] + COS \rightarrow [CaS \cdot MgO] + 2\ CO_2 \qquad (5\text{-}21)$$

The process as described by Conoco involves desulfurizing the raw gas in a fluidized bed of half-calcined dolomite acceptor at 1600-1700 F, according to reaction (5-19). The sulfided acceptor is regenerated by the addition of steam and $CO_2$ at reduced temperature, thereby reversing the absorption reaction. Regeneration is conducted in a fluidized bed at around 1300 F giving a dilute $H_2S$ off-gas,.less than 10 percent (volume). Because the low $H_2S$ off-gas content prohibits the direct use of a vapor-phase Claus unit for sulfur recovery, Conoco is proposing the use of a liquid phase sulfur recovery system based on the Wachenroeder reaction

$$2H_2S + H_2SO_3 \rightarrow 3S + 3H_2O \qquad (5\text{-}22)$$

All important features of the process have been confirmed (Ref. 5-11) in bench-scale studies. There remains to be determined the effect of scale-up as well as the effect of ammonia and the ability to remove particulates and alkali fumes from the effluent. The process is described in detail in Section 6 and the effect of gasifier operating conditions on sulfur removal examined in Section 8.

Air Products Fully Calcined Dolomite Process--

As with the Conoco process, this system employs dolomite as the sulfur acceptor. However, the acceptor is in the fully calcined form; i.e., [CaO · MgO], and the process therefore consists of three steps: absorption, regeneration and calcination.

Absorption of hydrogen sulfide takes place at around 1600-1700 F via the reaction with calcined dolomite:

$$[CaO \cdot MgO] + H_2 \rightarrow [CaS \cdot MgO] \qquad (5\text{-}24)$$

For this system, the $H_2S$ removal efficiency is independent of pressure but, for a given gas composition, it decreases with increasing temperature. From a practical viewpoint, there is a minimum temperature at which this process should operate; that being the temperature at which the decomposition pressure of $CaCO_3$ equals the partial pressure of $CO_2$ in the gas. Below this temperature carbon dioxide will also be absorbed according to the reaction.

$$CaO + CO_2 \rightarrow CaCO_3$$

While the carbonate can also react with $H_2$ in accordance with reaction (5-19), this is detrimental for two reasons:

a. Additional acceptor calciner capacity is required with an associated increase in heat input, and

b. The large exothermic heat of $CO_2$ absorption, 75,000 Btu/mol, will necessitate some means for heat removal from the absorption bed.

Like the Bureau of Mines and Conoco processes, COS removal appears to be thermodynamically attractive. Residual COS content may be estimated from the chemical equilibrium associated with the absorption reaction:

$$[CaO \cdot MgO] + COS \rightarrow [CaS \cdot MgO] + CO_2 \qquad (5\text{-}25)$$

Regeneration of the sulfided acceptor is conducted similarly to the Conoco process. Steam and carbon dioxide are reacted with the sulfided dolomite at 1100-1200 F resulting in a dilute $H_2S$ off-gas and half-calcined dolomite.

$$[CaS \cdot MgO] + H_2O + CO_2 \rightarrow [CaCO_3 \cdot MgO] + H_2S \qquad (5\text{-}26)$$

Hydrogen sulfide in the regenerated off-gas may be converted to elemental sulfur via the liquid-phase Wachenroeder process or first concentrated and then fed to vapor-phase Claus units.

The regenerated half-calcined dolomite must be calcined before recycle to the subsequent absorption cycle. Calcination is effected at 1900 F with air to drive off carbon dioxide:

$$[CaCO_3 \cdot MgO] \rightarrow [CaO \cdot MgO] + CO_2 \qquad (5\text{-}27)$$

This reaction is endothermic and requires the use of fuel to preheat the air. Excessive temperature, above 2000 F, during calcination can result in deactivation of the acceptor.

There is currently no development activity in progress.

IGT-Meissner Process--

This process is being developed by the Institute of Gas Technology in conjunction with its U-Gas Process. The process, still in the conceptual stage, utilizes a splashing molten metal-gas contact to remove $H_2S$ from the gas. The contact results in the formation of a metal sulfide which is then decomposed electrolytically to release $H_2S$ and regenerate the molten metal for recycle. The operating temperature is 900 F and a high sulfur removal efficiency (98 percent) is projected. The molten metal absorbent is proprietary. The estimated characteristics given in Table 5-3 are preliminary (Reference 5-17). Further development is being directed toward establishing mass transfer rates.

Battelle Northwest Process--

The Battelle process (Reference 5-18) utilizes calcium carbonate, $CaCO_3$, dissolved in a tertiary mixture of alkali metal carbonates to remove $H_2S$ at high temperature. The tertiary carbonate system, consisting of potassium carbonate, lithium carbonate, and sodium carbonate, has a

eutectic melting point around 750 F. Under operating conditions it contains about 15 mol percent $CaCO_3$. Besides removing sulfur compounds from the gas stream, this solvent will also scrub out the fly ash constituents from the raw gas.

The system under study at Battelle contacts the molten salt and raw gas in a co-current flow venturi scrubber at temperatures from 1100 to 1700 F. Hydrogen sulfide is removed from the gas by chemical reaction with the carbonate solvent:

$$CaCO_3 + H_2S \rightarrow CaS + CO_2 + H_2O \qquad (5\text{-}28)$$

Unfortunately, due to the chemical complexity of the molten salt system, the equilibrium constant cannot be accurately predicted. Observed K values have been a factor of ten below the calculated values. Qualitatively, the $H_2S$ removal efficiency improves with temperature and is inversely proportional to pressure. Experimental data at atmospheric pressure have indicated high $H_2S$ removal, >94 percent, at salt loadings under 50 percent of capacity. Regeneration of the salt is conducted with steam and $CO_2$ at 1000-1100 F giving an off-gas having $H_2S$ concentrations suitable as feed to a Claus unit for recovery of elemental sulfur.

This process is presently in the pilot plant stage where it will be demonstrated on an actual gasifier raw gas at low pressure, 0-10 psig. It is doubtful that this system can achieve high $H_2S$ removal efficiencies at high pressure and its ability to handle other sulfur contaminants is yet to be demonstrated. Materials of construction for a commercial unit will also present a formidable problem.

Babcock and Wilcox Process--

This process is chemically similar to the Bureau of Mines process in that it utilizes iron oxide to remove $H_2S$ from the gas at high temperatures. The difference lies in the material used by the two processes. While the Bureau of Mines' process uses a sintered material made from iron oxide and fly ash, the Babcock and Wilcox process starts out with carbon steel and generates an iron oxide scale on the steel surface which is then used as the desulfurization agent.

While the reactions are not pressure sensitive, the equipment lends itself to low (ambient) pressure operation. The desulfurizer uses a modified regenerative type air heater and is referred to as a "regenerative desulfurizer". Sulfur removal efficiency greater than 90 percent is projected. Regenerant gas is expected to contain 10 to 13 percent by volume $SO_2$. The process concept has been demonstrated on bench scale equipment and a hardware design has been developed.

## REFERENCES


5-1 Archer, D. H., et al.: Coal Gasification for Clean Power Production. Clean Fuels From Coal Symposium II, IGT, Chicago, Illinois, June 1975.

5-2 Maddox, R. N.: Gas and Liquid Sweetening. Second Edition, J. M. Campbell, CPS (1974).

5-3 Jennett, E.: Assessment of the Giammarco Vetrocoke Process. Proc. Gas Conditioning Conf., University of Oklahoma (1964).

5-4 Reeve, L.: Desulfurization of Coke Oven Gas at Appleby-Frodingham. Journal of the Institute of Fuel, p. 319, July 1958.

5-5 Bureau, A. C., and M. J. F. Olden: Operation of the Frodingham Desulfurization Plant at Exeter. The Chemical Engineer (206), CE55-62, March 1967.

5-6 Abel, W. T., F. G. Shultz and P. F. Langdon, Removal of Hydrogen Sulfide from Hot Producer Gas, Report No. RI 7947 (1974).

5-7 Oldaker, E. C., A. M. Poston, and W. L. Farrior, Removal of Hydrogen Sulfide from Hot Low Btu Gas with Iron Oxide - Fly Ash Sorbents, Report No. MERC/TPR-75/1 (1975)

5-8 Oldaker, E. C., A. M. Poston, and W. L. Farrior, Hydrogen Sulfide Removal from Hot Producer Gas eith a Solid Fly Ash Iron Oxide , Absorbent, Report No. MERC/TPR-75/2 (1975)

5-9 Farrior, W. L., A. M. Poston, and E. C. Oldaker, Reggenerable Iron Oxide Silica Sorbent for the the Removal of $H_2S$ from Hot Producer Gas, Paper presented at Fourth Energy Resources Conference University of Kentucky (January, 1976).

5-10 Jones, C. H. and J. M. Donohue: Comparative Evaluation of High and Low Temperature Gas Cleaning for Coal Gasification - Combined Cycle Power Systems. EPRI AF-416, April 1977.

REFERENCES (Continued)


5-11 Curran, G. P., B. J. Koch, B. Pasek, M. Pell, and E. Gorin: High Temperature Desulfurization of Low-Btu Gas. EPA-600/7-77-031, (NTIS No. PB271-008), April 1977.

5-12 Curran, G. P., et al.: $CO_2$ Acceptor Gasification Process. Adv. Chem. Series No. 69 "Fuel Gasification", pp. 141-146 (1967).

5-13 Squires, A. M., et al.: Desulfurization of Fuels with Calcined Dolomite. AIChE Symposium Series 115, Vol. 67 (1971).

5-14 Ruth, L. A., et al.: Desulfurization of Fuels with Half Calcined Dolomite. Environmental Science and Technology, Vol. 6. No. 12:1009. November 1972.

5-15 Squires, A. M.: Process for Desulfurizing Fuels. U.S. Patent 3,481, 834, December 2, 1969.

5-16 Squires, A. M.: Cyclic Use of Calcined Dolomite to Desulfurize Fuels Undergoing Gasification. Adv. Chem. Series No. 69, "Fuel Gasification", p.p. 205-229 (1967).

5-17 Letter Communication November 15, 1974. Dennis Duncan, Institute of Gas Technology, to M. S. Dandavati, Hittman Associates, Inc.

5-18 Moore, R. H.: Removal of Sulfur Compounds and Fly Ash from Low Btu Gas. Battelle Pacific Northwest Laboratories. BN-SA-210 (1973).

## SECTION 6

## DETAILED DESCRIPTION OF SELECTED GASIFICATION AND CLEANUP PROCESSES

### INTRODUCTION

This section presents both a description of and the rationale leading to the selection of particular gasification and desulfurization processes for integration with a combined-cycle power system. The general approach was to select gasifiers that were representative of the various general types. These were combined with selected high- and low-temperature cleanup systems for comparison of the resulting integrated power plants.

### SELECTION OF PROCESSES

#### Gasifiers

During this and earlier phases, at least one representative of each of the major gasifier types was selected for study. The coal gasifiers that have been used in defining the integrated power plants are:

1. Bureau of Mines Stirred Bed Gasifier
2. U-Gas Ash Agglomerating Gasifier
3. Koppers-Totzek Entrained Flow Gasifier
4. BCR-type, Two-Stage Entrained Flow Gasifier
5. Molten Salt Gasifier

Of these, all but the Koppers-Totzek process operate above atmospheric pressure. While pressurized operation presents a number of operational problems, it is a definite advantage when attempting integration with a combined-cycle power plant. This fact showed up in both the performance and cost of power from a plant using an oxygen-blown K-T gasifier. While the process is very desirable in all other respects, the need to compress the product gas resulted in a heat rate approximately 10 percent worse than the closest competitor. Also, the combined effect of performance and cost of air-separation and other additional equipment resulted in a cost of electricity nearly 30 percent greater than the competition. It was concluded that the process does not lend itself to use with combined-cycle power generation.

The Bu Mines Gasifier, which was selected as typical of the "Fixed Bed" type, does not permit recovery of the sensible heat in the gasifier effluent. This is due to the need to quench that stream and condense out the tars and oils that would otherwise foul the downstream equipment. In the current phase, emphasis was placed on overall performance improvement by the use of high performance power system technology. This includes a high temperature gas turbine with a 2400 psi reheat steam bottoming cycle. Efforts at integration of the Bu Mines gasifier with such a power plant showed them to be incompatible due to the lack of heat recovery from the raw fuel gas and the large quantity of steam required by the gasifier. It was concluded that the performance estimates contained in the previous report (Reference 6-1) are representative of the capabilities of systems using this particular gasifier. The estimated heat rates were 9200 Btu/kWh for low- and 8600 Btu/kWh for high-temperature cleanup. These can be compared with current estimates of 7900 and 7500 Btu/kWh with low- and high-temperature cleanup respectively for the advanced type gasifiers. Therefore, no further work was done on the power plants having a Bu Mines-type gasifier.

While the oxygen-blown, slagging Lurgi gasifier promises much better performance than the Bu Mines process, the only oxygen-blown gasifier that was used was the BCR-type two stage process. It was studied for comparison with its air-blown counterpart. Gasifier operating characteristics did not differ as widely and the effect of air separation and medium- vs low-Btu gas could be better appreciated.

For integration with a combined-cycle power plant, the important gasifier characteristics are:

1. No condensible hydrocarbons in effluent
2. Low gasifier exit temperature
3. Low steam feed rate.

The remaining gasifiers, U-Gas, BCR-type two-stage and the molten salt-type appear to be good selections on those bases. In terms of power plant heat rate, cost of electricity and emissions, the estimated performance of all three is the same within the accuracy of the study data.

## Low-Temperature Desulfurization Processes

The majority of low-temperature desulfurization processes that were identified are commercially operative and could be used with both current and advanced gasification processes. In selecting those most applicable in treating coal derived fuel gas, the following factors were considered:

a. Sulfur removal capabilities, not only with respect to $H_2S$, but also other sulfur compounds such as COS and $CS_2$.

b. Selective absorption of sulfur compounds over carbon dioxide. Since $CO_2$ need not be removed from fuel gas intended for use in advanced power cycles, absorption of $CO_2$ represents an increased operating load on the system.

c. Type of absorbent insofar as the treated fuel gas may be contaminated by entrained or volatilized solvent which could be detrimental to downstream system components.

d. The system's tolerance to other contaminants present in the raw fuel gas such as ammonia, cyanides, phenols, and tars.

e. Overall energy requirements and operating cost.

A preliminary screening, reported in Reference 6-2, led to the selection of three processes for detailed comparison in an integrated system. These are the Benfield chemical solvent process and the Selexol and Rectisol physical solvent processes. This comparison involved a preliminary performance estimate of an overall integrated power system using each of the three processes.

For the purpose of this comparison, the entrained-flow BCR type gasifier was used under the following operating conditions:

| | |
|---|---|
| Coal Type | |
| Illinois No. 6 | |
| Feed, lb/hr | 2000 |
| Gasifier Operation | |
| Temperature, F | 1800 |
| Pressure, psia | 500 |
| Air, lb/lb, coal | 3.422 |
| Steam, lb/lb coal | 0.567 |
| Gasifier Production | |
| Net Gas, SCF/lb coal | 74.53 |
| Slag, lb/lb coal | 0.087 |

Raw Gas Analysis, Volume %

| $N_2$ | CO | $CO_2$ | $H_2$ | $CH_4$ | $H_2S$ | COS | $NH_3$ | $H_2O$ |
|---|---|---|---|---|---|---|---|---|
| 47.70 | 16.74 | 8.84 | 11.98 | 3.14 | 0.46 | 0.10 | 0.38 | 10.66 |

There is a net heat rejection from the gasifier of 0.384 MM Btu/hr which is available for high-pressure steam generation. Each desulfurization unit was designed to treat the raw gas to a residual sulfur content of 100 ppm. The acid gas from the regenerator was designed for a high (> 10 percent) $H_2S$ concentration enabling the recovery of elemental sulfur via a conventional Claus plant.

A block flow diagram for the integrated cleanup systems is shown in Figure 6-1. Raw producer gas from the BCR gasification system at 1750 F is first cooled in the heat recovery section to about 300 F. The heat extracted is available for regenerative heating of the clean fuel gas, boiler feed water preheating, and steam generation. This section was optimized to give the highest overall plant efficiency for each case. The gas is further cooled below the dew point to about 120 F via direct water scrubbing which also removes most of the ammonia present in the raw gas. Sour water from this scrubbing operation is first steam stripped and the stripped gases are sent to an ammonia recovery section. The cooled, ammonia-free producer gas is desulfurized in the low-temperature acid gas removal section producing a clean fuel gas and a regenerated acid gas stream containing 13-22 percent hydrogen sulfide. Sulfur is recovered from the latter stream and from the ammonia recovery off-gas stream in a vapor phase Claus unit. A tailgas treating section is included and recovers a minimum of 99 percent sulfur.

Complete material balances for the Selexol Benfield and Rectisol processes in this application are given in Reference 6-1. Performance of the cleanup processes are summarized in Table 6-1 together with the utility requirements.

As expected for a chemical solvent system, the Benfield process requires 2.5 to 3 times more low-pressure steam for solvent regeneration than do the two physical solvent systems. This is partially offset by the higher power consumption required by the Selexol and Rectisol processes for mechanical refrigeration to obtain subambient operating tempratures.

Using these data, a preliminary analysis of the integrated power stations gave the following relative performance characteristics:

| Cleanup System | Clean Fuel HHV Btu/SCF | Fuel Gas Regen. Temp. F | Gasifier Cold Gas Efficiency % Coal HHV | Overall Station Efficiency % Coal HHV |
|---|---|---|---|---|
| Selexol | 142.6 | 685 | 73.4 | 31.2 |
| Benfield | 136.5 | 685 | 74.9 | 30.5 |
| Rectisol | 144.0 | 685 | 73.4 | 31.4 |

# INTEGRATED LOW–TEMPERATURE CLEANUP SYSTEM

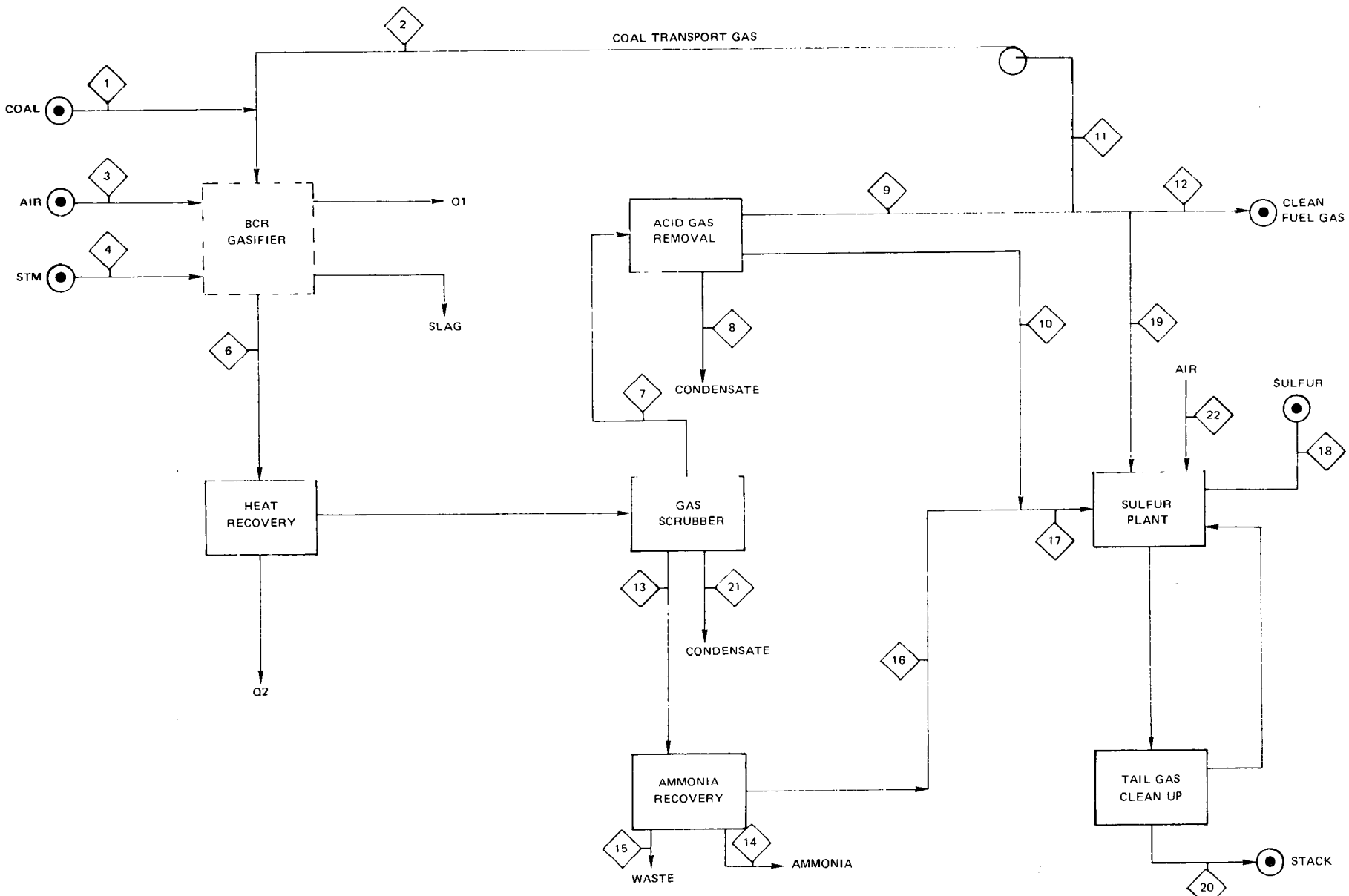


FIG. 6–1

TABLE 6-1

SUMMARY OF LOW-TEMPERATURE INTEGRATED SYSTEMS

| Process | Selexol | Benfield | Rectisol |
|---|---|---|---|
| **Feed Streams**(1) | | | |
| BCR Gas | | | |
| Flow, mph | 426.45 | 426.45 | 426.45 |
| T F | 1750 | 1750 | 1750 |
| P psia | 450 | 450 | 450 |
| **Product Stream** | | | |
| Sulfur | | | |
| Flow, lb/hr | 74.9 | 74.9 | 76.2 |
| T F | 300 | 300 | 300 |
| P psia | - | - | - |
| Transport Gas | | | |
| Flow, mols/hr | 34.20 | 34.20 | 34.21 |
| T F | 300 | 300 | 300 |
| P psia | 550 | 550 | 550 |
| Product Gas | | | |
| Flow, mols/hr | 332.84 | 349.47 | 329.46 |
| T F | 100 | 250 | 90 |
| P psia | 430 | 430 | 430 |
| Vol% $N_2$ | 54.70 | 52.32 | 55.20 |
| CO | 19.20 | 18.36 | 19.37 |
| $CO_2$ | 8.66 | 7.02 | 7.88 |
| $H_2$ | 13.73 | 13.14 | 13.86 |
| $CH_4$ | 3.59 | 3.44 | 3.63 |
| $H_2O$ | 0.11 | 5.66 | |
| $NH_3$ | | 0.06 | 0.06 |
| $H_2S$ | 100 ppm | 100 ppm | 10 ppm |
| M. W. | 25.47 | 24.81 | 25.31 |
| HHV Btu/scf | 142.6 | 136.5 | 144.0 |
| **Utilities** | | | |
| Cooling Duty, MMBtu/hr | 2.858 | 3.287 | 3.008 |
| Steam @ 1300 psia, lb/hr | 106.5 | 106.5 | 106.5 |
| @ 65 psia, lb/hr | 1020.0 | 2504 7 | 779.6 |
| Electric Power, kw | 60.8 | 25.5 | 41.8 |
| Boiler Feed Water, lb/hr | 219.2 | 222.8 | 223.1 |
| Steam Condensate, lb/hr | 1233.3 | 2718.3 | 994.8 |
| Feed Gas Cooling, MMBtu/hr(2) | 4.862 | 5.156 | 4.616 |

(1) Based on 2000 lb/hr Coal Feed to Gasifier
(2) Available for STM Generation and/or Gas Reheat

The efficiencies above do not necessarily represent the optimum power cycle configuration and fuel gas regenerative heating that can be achieved. However, in terms of their relative magnitudes for a particular system configuration, it can be concluded that the three low-temperature desulfurization processes can give comparable performance.

For a variety of reasons, including the relatively harmless solvent and moderate absorber temperature, the Selexol process was selected as the typical low-temperature process. Sulfur recovery is accomplished in a Claus plant with a Beavon unit for tail gascleanup.

High-Temperature Desulfurization Processes

Four high-temperature processes, the Conoco Half-Calcined Dolomite, Air Products Fully-Calcined Dolomite, Bureau of Mines Sintered Iron Oxide, and Battelle Molten Salt processes were compared on an integrated power plant basis in a manner similar to the low-temperature comparison. The comparison, complete with process flow sheets is reported in Reference 6-1. Results of the comparison are shown below:

| Cleanup System | Clean Fuel HHV Btu/SCF | Clean Fuel Temp. F | Gasifier and Cleanup Cold Gas Efficiency % Coal HHV | Overall Station Efficiency % Coal HHV |
|---|---|---|---|---|
| Conoco | 125.2 | 1610 | 76.1 | 36.0 |
| Air Products | | | | |
| Case 1 | 143.1 | 1550 | 53.8 | 29.1 |
| Case 2 | 126.5 | 1630 | 73.7 | 35.5 |
| Bureau of Mines | 124.8 | 1000 | 72.5 | 31.6 |
| Battelle | 125.3 | 1610 | 76.1 | 34.9 |

For the Air Products fully calcined dolomite process, the large variation in performance is caused by absorption of $CO_2$ at the lower desulfurizer temperature. The reaction is exothermic. Thus, the bed must be cooled and re-calcination uses a like amount of energy.

The Bureau of Mines process suffers from the need to cool the raw gas down to 1000 F for desulfurization. Also, since the sulfur comes off the regeneration step as $SO_2$, the recovery of elemental sulfur is more difficult. However, it is ideally suited for the moving bed or Bu Mines-type gasifier for which it is being developed.

Of the two remaining systems, despite their relatively comparable performance, the Conoco process is preferred. The consequences of potential carryover of alkali metals are too severe to consider the use of a high-temperature molten carbonate system without a downstream water wash.

## GASIFICATION PROCESS DESCRIPTION

For each process considered in this report, flow sheets and mass balances are given in Section 11. The coal composition given in Table 6-2 applies to all but the molten salt gasifier. While data for that process are based on an Illinois No.6 coal, the composition varies to some extent.

### U-Gas Gasification Process

The U-Gas process is being developed by the Institute of Gas Technology. It is a fluidized bed system that can produce either low- or medium-Btu gas with either air- or oxygen-blown operation.

The use of a fluidized bed has many inherent advantages. In particular the bed acts as a catalyst for the gasification reactions and is expected to permit operation at relatively low temperature while completely gasifying the feed. The U-gas process is distinguished from other fluid bed processes in that it utilizes an "ash agglomeration" technique to concentrate the ash and remove it with minimum carbon content while operating the bed with a relatively high carbon content.

The gasifier is shown schematically in Figure 6-2 from Reference 6-3. The key to operation of the gasifier is the agglomeration and separation of the low carbon content ash from the bed. The U-gas gasifier accomplishes this and maintains a bed of approximately 70 percent carbon and 30 percent ash by proper design and operation of the grid and the fines return system in the bottom of the gasifier. The grid is sloped toward one or more inverted cones contained in the grid. Part of the fluidizing steam and air flow through the grid while the remaining fluidizing gas flows upward at high velocity through the throat at the cone apex. The ratio of steam to air in the fluidizing gas fed to the cone is chosen so that the resulting submerged jet in the cone is hotter than its surroundings. The temperature of the jet is maintained near the softening point of the ash particles for the specific coal being gasified. Ash particles preferentially stick together, and the agglomerates grow until they are heavy enough to move downward counter to the force of the gas stream in the apex of the cone. Thus, they fall out of the fluidized bed.

Fines elutriated from the fluid bed are separated from the product gas by two cyclones in series: the first inside the gasifier and the second outside. Fines removed by the first cyclone are returned to the bed by a standleg. Fines removed by the external cyclone are entrained in the inlet air/steam to the gasifier grid cone where they are instantly gasified because of the high temperature in that region.

With Illinois No.6 coal feed, the base case composition out of the gasifier is given in Table 6-3. All of the sulfur in the coal is assumed to appear as $H_2S$ or COS and the two compounds are assumed to be at equilibrium with 94 percent of the total being $H_2S$. Ammonia is also

TABLE 6-2

FEED COAL COMPOSITION

| Constituent | Weight % |
|---|---|
| Carbon | 67.4 |
| Hydrogen | 5.1 |
| Sulfur | 3.8 |
| Oxygen | 9.6 |
| Nitrogen | 1.2 |
| Ash | 8.7 |
| Water | 4.2 |

Higher Heating Value - 12,200 Btu/lb

## ASH–AGGLOMERATING GASIFIER

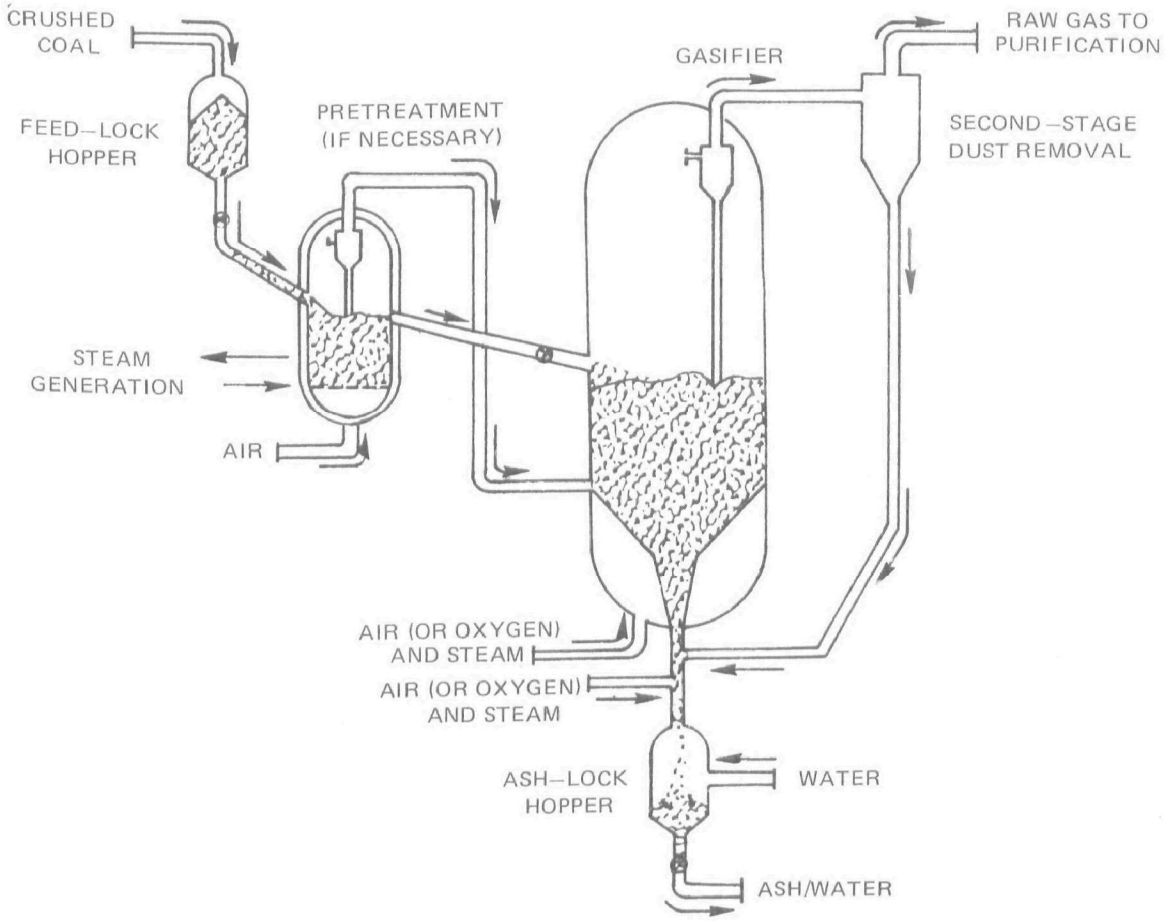

TABLE 6-3

U-GAS GASIFIER EFFLUENT

| | Mol Percent |
|---|---|
| CO | 18.0 |
| $CO_2$ | 8.47 |
| $H_2$ | 15.42 |
| $H_2O$ | 10.62 |
| $CH_4$ | 3.03 |
| $N_2$ | 43.82 |
| $NH_3$ | 0.03 |
| $H_2S$ | 0.59 |
| COS | 0.02 |

Mol. Wt 23.98

HHV - Btu/SCF 138.8
Cold gas efficiency (2) 80.1 percent
Steam/coal ratio 0.557
Air/coal ratio 3.01

assumed to appear in equilibrium concentration due to the catalytic effect of the fluid bed. The relatively low level would permit the use of high temperature cleanup without ammonia removal.

Raw coal is crushed to 1/4 in. size. The feed may contain up to 10 percent < 200 mesh material as generated in the crushing step. Noncaking, sub-bituminous coals or lignate can be fed directly to the gasifier from the crusher. Caking coals (Eastern bituminous, for example) must at present be pretreated by contact with air in a fluidized bed operating at gasifier pressure and 700 to 800 F. An oxidized outer layer forms on the coal particles, and this prevents agglomeration and possible blockage in the gasifier.

Heat evolved during pretreatment is removed by generating steam in heat-transfer coils which are immersed in the fluidized bed pretreater. Coal that has been pretreated is fed to the gasifier. Off-gases are fed to the bottom of the gasifier to destroy all tar and oils that evolve during the pretreating process.

The gasifier is a refractory lined, hot-metal-wall vessel. Steam is generated to provide cooling for the pressure vessel while the fluid bed reaction takes place at temperatures as high as 2000 F. System pressure can be as low as 100 psia (minimum level is determined by economics) but in this application is 400 psia, as determined by gas turbine pressure ratio and pressure drop in the fuel processing system and burner fuel distribution requirements. The operating conditions within the gasifier result in a product gas free of tars and oils. Thus no special cleanup procedures are needed.

BCR Two-Stage Entrained Flow Process

The two-stage entrained flow gasifier developed by Bituminous Coal Research, Inc. (BCR) was selected as the second-generation gasification system for this study. An oxygen-blown, 120 ton/day pilot plant to produce $2.5 \times 10^6$ SCFD of SNG is under development at Homer City, Pennsylvania. Design of an air-blown version is currently underway at the Foster Wheeler Corporation.

A schematic diagram of the BCR gasifier with its auxiliaries is shown in Figure 6-3 (Reference 6-4). Run-of-the-mine coal is crushed, dried, and pulverized until 70 percent passes through a 200 mesh screen. The pulverized coal is metered from the feed hopper into hot transport gas recycled from the gas purification section and then fed into the upper stage of the gasifier. In this stage, the coal is entrained by the hot gases from the lower stage, is rapidly heated and devolatilized. At the high (1800 F) temperature, the products are expected to be methane, carbon monoxide, hydrogen and unreacted char. The gases leave the upper stage at approximately 1800 F.

## BCR ENTRAINED – FLOW GASIFIER

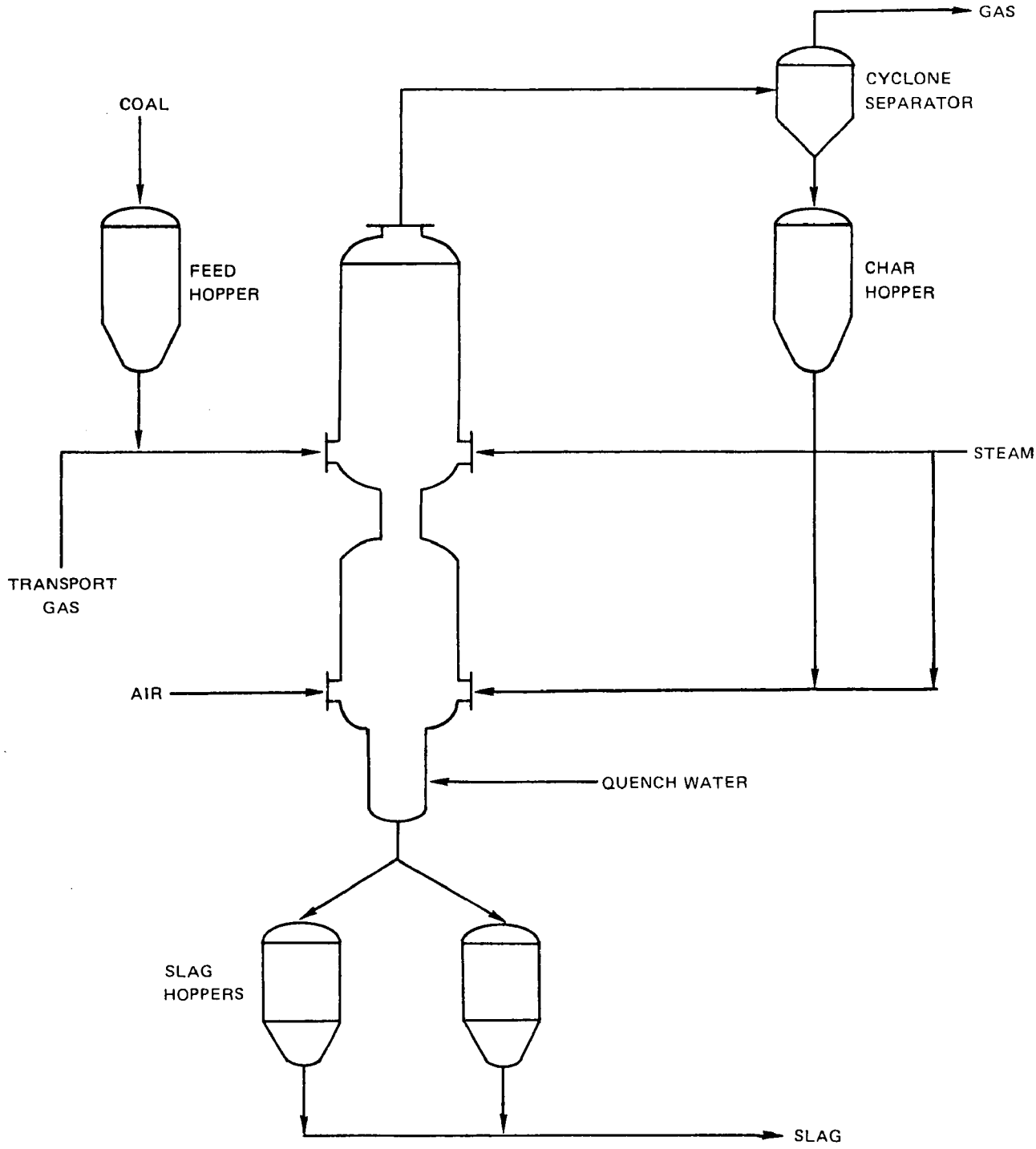


R1–19–3

Entrained residual char is removed from the gas by cyclone separators and recycled via superheated steam to the lower stage of the gasifier. Part of the char then reacts with steam and air at 2800 F to form synthesis gas and molten slag. The hot synthesis gas, containing unreacted char, flows to the upper stage for reaction with coal as described above. Molten slag collects and drains from the bottom of the lower stage into the slag pot where it is water quenched.

Overall, the gasifier reactions are endothermic and the process heat requirement is supplied by combustion of char with air. The air rate is regulated to maintain the operating temperature in the upper stage while the lower stage temperature is controlled by steam addition. Temperature in the lower stage is fairly critical since too high a temperature will damage the refractory and too low a temperature will cause the ash slag to freeze and accumulate.

For the current study, estimated performance of the gasifier was obtained from work done by Fluor under contract to EPRI. The estimate is based on minimum steam feed and is designed to improve performance of the integrated power plant. This is discussed in Section 8. Estimates for both air- and oxygen-blown operation have been given in Table 5-1. Note that while the air-blown case has a relatively low steam/coal ratio, that ratio is approximately 0.6 for oxygen-blown operation. This is due to the lack of the nitrogen diluent which helps to quench the reaction in the first stage. With pure oxygen, a significant amount of steam is needed to control the lower stage temperature.

The cold gas efficiency is 83 percent for air- and 85.7 percent for oxygen-blown operation. While data defining this gas composition are not available, it is expected that at the high temperature and with sufficient residence time, formation of tars, oils and phenols will be avoided. The resultant gas is expected to be quite clean relative to that encountered in the moving bed type of process.

Molten Salt Gasification

The molten salt gasification process is well suited to this application. It uses no steam and the catalytic effect of the melt, in addition to minimizing reactor volume, should tend to produce levels of ammonia and carbonyl sulfide that are close to equilibrium. Because a large part of the sulfur is retained in the melt, total sulfur compounds in the raw gas are at relatively low levels and at equilibrium COS would be on the order of 30 ppm. Other attributes of the process include the ability to handle caking coals and the ability to operate with either coarse or finely ground coal. Because both sulfur and ash are retained in the melt, a large part of the system is devoted to processing the melt to recover sulfur and regenerate the sodium carbonate. This process also incorporates a final fuel gas desulfurization step so that the use of a conventional desulfurization process is not required. Thus the process consists of several sections:

1. Gasification
2. Gas cleanup
3. Ash removal
4. Salt recovery

Gasification and Gas Cleanup--

In the gasifier, as indicated in Figure 6-4, coal is suspended in a bed of molten sodium carbonate and is gasified with air to produce low-Btu fuel gas. Coal mixed with recycled sodium carbonate is continuously charged to the gasifier, and the vigorous turbulence in the molten salt bed results in uniform distribution of coal throughout the bed. Air is injected into the molten bed and the partial oxidation of coal produces a low-Btu fuel gas free of coal ash. The ash is retained in the melt. Furthermore, it is also free of ammonia, tars, and heavy hydrocarbons. These constituents are destroyed in the molten sodium carbonate. Under conditions of low-Btu gasification, a high degree of sulfur retention as $Na_2S$ results in the melt such that the raw fuel gas is low in $H_2S$. Trace amounts of alkali metals must be removed from the gas prior to firing so that a low-temperature scrub is necessary.

A number of complex chemical reactions, many of which involve catalytic interaction with the molten sodium carbonate, occur in the bed. Table 6-4 indicates, in simplified form, the most imporant of these. Partial oxidation, reaction (6-1), is the main route for gasification of carbon. If the air to coal ratio is too high, formation of $CO_2$ by reaction (6-8) becomes important. This is undesirable because the fuel gas quality suffers and the reactor tends to run hotter owing to the highly exothermic nature of reaction (6-8). In accordance with reactions (6-2) and (6-3) the volatile matter in the coal is broken down by the catalytic action of the molten salt and as a result the low-Btu fuel gas is free of tars and heavy hydrocarbons. It is reported that ammonia is also destroyed by the molten salt (Reference 6-5). Equilibrium calculations performed during this study did show some ammonia, however, it was at a relatively low concentration (180 ppm) and if not removed would not exceed allowable emission levels. The water-gas shift reaction, reaction (6-4), is maintained at equilibrium, and $CO_2$ and $H_2O$ concentrations in the low-Btu gas product are low, being driven there by the reducing environment. Reaction (6-5) indicates an important feature of the process. Sulfur in the coal reacts with the melt to produce $Na_2S$. An equilibrium does exist between $Na_2S$ in the melt and $H_2S$ in the gas (reaction (6-6)). However, because $CO_2$ and $H_2O$ concentrations are low, most of the sulfur is retained in the melt. Since $H_2S$ levels are low resulting COS levels are very low (reaction (6-7)). Reactions (6-9), (6-10), and (6-11) are of minor significance in low-Btu gasification.

To remove ash and sulfur from the gasifier, a purge stream of melt is withdrawn and treated. Coal ash is separated, sulfur is removed as $H_2S$, and sodium carbonate is recovered for recycling to the gasifier. The ash level in the melt can be allowed to accumulate to as much as 30 percent, thereby minimizing the purge treating requirements.

## LOW–BTU MOLTEN SALT COAL GASIFICATION PROCESS

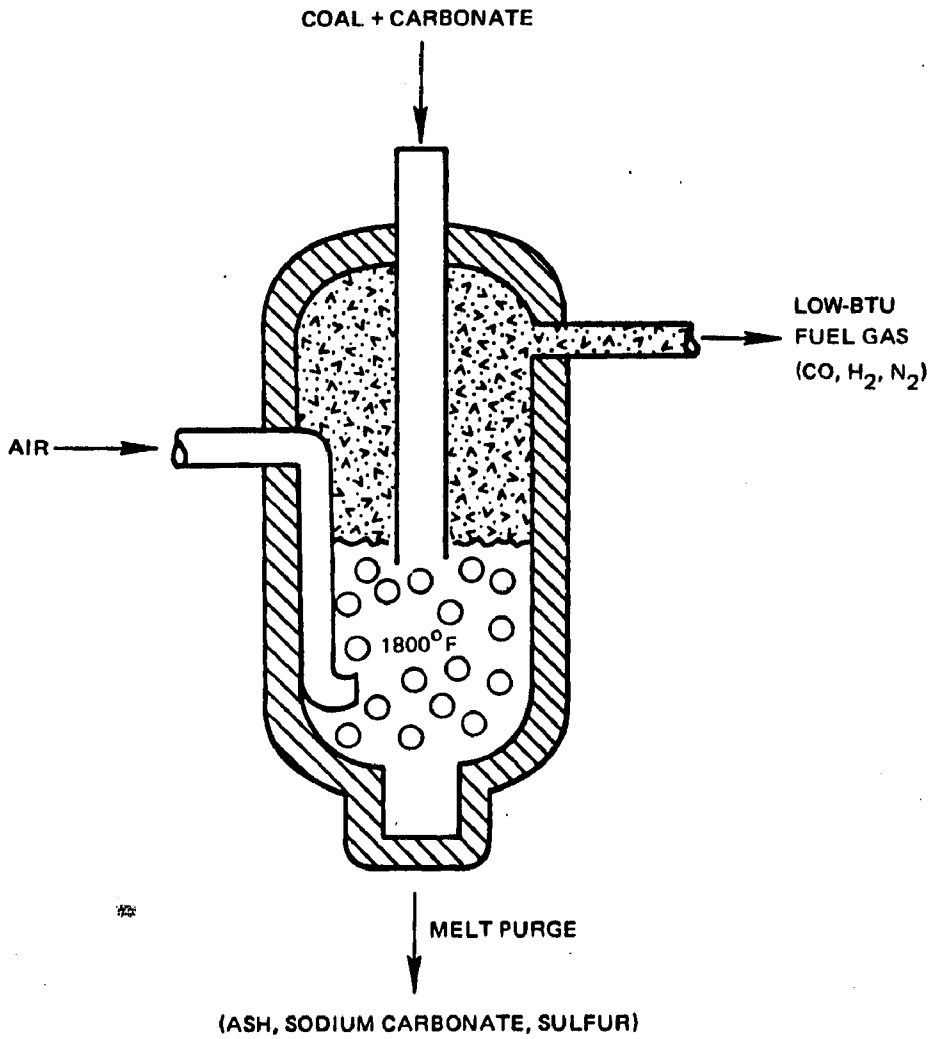

TABLE 6-4

MOLTEN CARBONATE REACTIONS

$$C + 1/2\ O_2 \rightarrow CO \qquad (6\text{-}1)$$

$$C_mH_n\ (\text{COAL}) \rightarrow \text{VOLATILES} + C \qquad (6\text{-}2)$$

$$\text{VOLATILES} \quad CO + H_2 + CH_4 \qquad (6\text{-}3)$$

$$CO + H_2O \rightleftarrows CO_2 + H_2 \qquad (6\text{-}4)$$

$$S\ (\text{IN COAL}) + \text{MELT} \rightarrow Na_2S \qquad (6\text{-}5)$$

$$Na_2S + CO_2 + H_2O \rightleftarrows Na_2CO_3 + H_2S \qquad (6\text{-}6)$$

$$H_2S + CO \rightleftarrows COS + H_2 \qquad (6\text{-}7)$$

$$C + O_2 \rightarrow CO_2 \qquad (6\text{-}8)$$

$$C + H_2O \rightarrow H_2 + CO \qquad (6\text{-}9)$$

$$C + 2H_2 \rightleftarrows CH_4 \qquad (6\text{-}10)$$

$$Na_2CO_3 + H_2O \rightleftarrows 2\ NaOH + CO_2 \qquad (6\text{-}11)$$

The operating conditions of the molten salt gasifier must be such that the bed is above the fusion temperature of sodium carbonate (1570 F), yet below the temperature where excessive vaporization of sodium carbonate and material corrosion problems arise. Normal operation is maintained between 1700 F and 1800 F. The temperature can be conveniently controlled by regulating the air to coal ratio. Since the process is basically one of partial oxidation, increasing the air to coal ratio increases the gasifier temperature at the expense of fuel gas heating value. The operating pressure is determined primarily by fuel gas pressure requirements. Pressure does not have a significant effect on the fuel gas composition. Table 6-5 shows the reference coal composition and the fuel gas composition resulting from gasification at 411 psia and 1800 F with 1000 F air.

To control alkali metals, two stages of gas cleaning are employed. In the first stage, a fluid bed cooler is used to quench the gas so the entrained and vaporized sodium salts condense and fuse on the surface of the particles in the fluid bed. By providing condensation sites while quenching the gas, the fluid bed prevents formation of a sodium carbonate or sodium oxide fume. In addition to removing vaporized and entrained sodium carbonate, the fluid bed cooler also serves to prevent carbon laydown. The reaction $2CO \rightarrow CO_2 + C$ is avoided by rapidly quenching the gas. At the same time a high level of recovery of the fuel gas sensible heat is achieved. In the second stage of cleaning, a water wash is employed to remove final traces of alkali metals.

Figure 6-5 shows a flow schematic of the gasification and gas clean-up sections in the plant. Ground coal mixed with makeup sodium carbonate is transferred to lock hoppers which alternately feed the gasifier. To remove ash and sulfur from the system, a purge stream of melt is withdrawn and sent to the ash removal and salt recovery section.

The raw fuel gas from the gasifier is quenched in the riser leg of the fluid bed cooler to 1200 F or lower. Contact with the large mass of solids in the fluid bed rapidly quenches the gas. Entrained or vaporized sodium salts are condensed and solidified on the surface of sand particles in the fluid bed. The fluid bed rises through a boiler where heat is removed and then flows into the disengager where the cooled fuel gas separates from the solids and flows out through a system of cyclones. To remove the trapped sodium carbonate from the fluid bed cooler, an intermittent purge is taken. The sand particles, now coated with sodium carbonate, are recycled to the gasifier where the sodium carbonate is recovered. The sand particles are removed in the gasifier purge. To replenish the fluid bed an intermittent charge of sand is required.

From the fluid bed cooler the clean fuel gas is further cooled by heat exchange with the clean gas in the recuperator. It then passes through an

TABLE 6-5

MOLTEN SALT GASIFIER
COAL AND RAW GAS COMPOSITION

Illinois No. 6

| | |
|---|---|
| Carbon (wt. %) | 59.62 |
| Hydrogen (wt. %) | 4.46 |
| Oxygen (wt. %) | 8.45 |
| Nitrogen (wt. %) | 1.00 |
| Sulfur (wt. %) | 3.10 |
| Ash (wt. %) | 10.37 |
| Moisture (wt. %) | 13.00 |
| Higher Heating Value (Btu/lb) | 10755 |

Raw Fuel Gas Composition

| | |
|---|---|
| CO (vol. %) | 28.33 |
| $H_2$ (vol. %) | 13.79 |
| $CH_4$ (vol. %) | 1.50 |
| $CO_2$ (vol. %) | 3.08 |
| $H_2O$ (vol. %) | 2.35 |
| $N_2$ (vol. %) | 50.85 |
| $H_2S$ (vol. %) | 0.10 |
| Higher Heating Value (Btu/Scf) | 152 |

## GASIFICATION AND GAS CLEANUP

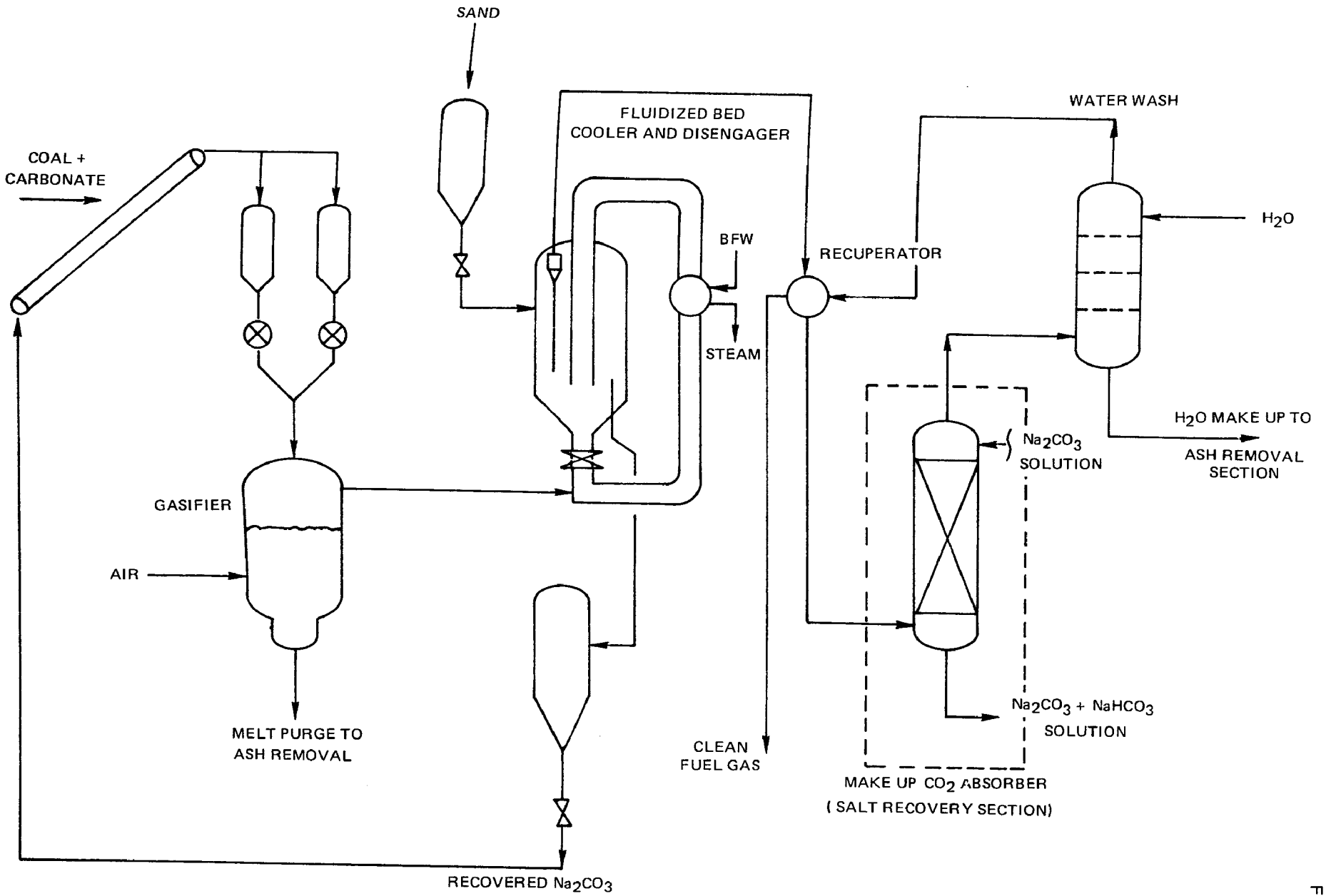


FIG. 6-5

absorber where a portion of the $CO_2$ in the gas is absorbed to provide makeup $CO_2$ for the salt recovery section. The sodium carbonate solution in the absorber reacts with both $CO_2$ and $H_2S$ thereby reducing the $H_2S$ content of the gas stream from 1000 down to less than 200 ppm. Particulates carried out of the fluid bed cooler will be removed in the absorber. From the makeup $CO_2$ absorber, the fuel gas goes to the water wash which removes final traces of alkali metals. The clean fuel gas is then reheated in the recuperator and sent to the gas turbine combustor.

For the system studied here, the detailed stream compositions are presented in Section 11.

Ash-Removal and Salt Recovery--

The ash removal and salt recovery section treats the purge stream which removes ash and sulfur from the gasifier. By employing technology similar to that in practice in the pulp and paper industry, ash and sulfur are removed and the sodium carbonate is recovered. Figure 6-6 is a simplified flow diagram of the ash removal and salt recovery section.

The melt purge withdrawn from the gasifier at 1800 F and 400 psia is first quenched to 430 F by a circulating stream of sodium bicarbonate in the quench tank. The outlet stream from the quench tank flows to a hydroclone where solids are separated from the solution which is recycled around the quench tank. The quenched slurry is then flashed to produce 26 psia steam at 250 F.

From the flash tank, the slurry is sent to the dissolving tank where it is mixed with additional sodium bicarbonate solution and makeup water which includes all the process condensate collected during the process. The sodium salts are thus allowed to dissolve. The sodium sulfide and sodium hydroxide originally present in the melt purge are neutralized by sodium bicarbonate, according to the following reactions:

$$Na_2S + NaHCO_3 \rightarrow Na_2CO_3 + NaHs \quad (6\text{-}12)$$
$$NaOH + NaHCO_3 \rightarrow Na_2CO_3 + H_2O \quad (6\text{-}13)$$

The outlet stream from the dissolving tank is treated by a combination of clarification, filtration and washing of the solids to minimize sodium loss in the ash. Ash free filtrate solution is pumped to the $H_2S$ stripper which uses the steam previously produced from the flash operation. The $H_2S$ stripper is operated at low pressure (2.15 psia) and at low temperature (130 F) in order to minimize steam consumption. Along with the $H_2S$ some $CO_2$ is also removed according to the following reactions:

$$NaHCO_3 + NaHS \rightarrow Na_2CO_3 + H_2S \quad (6\text{-}14)$$
$$2NaHCO_3 \rightarrow Na_2CO_3 + CO_2 + H_2O \quad (6\text{-}15)$$

## ASH REMOVAL AND SALT RECOVERY SECTION

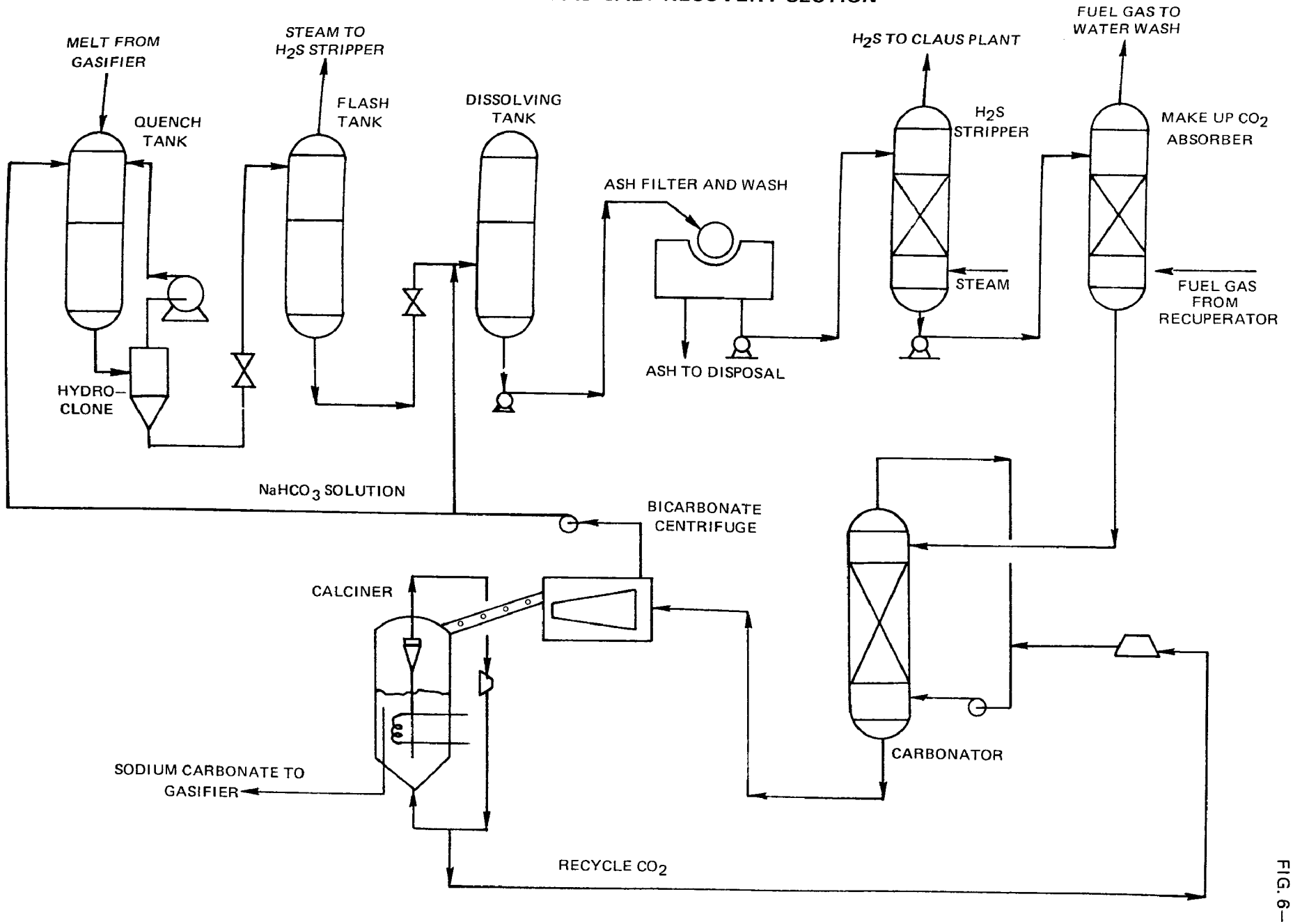


FIG. 6–6

The overhead leaving the $H_2S$ stripper at 130 F, containing water vapor, $H_2S$ and $CO_2$, is cooled to condense and remove water vapor. The remaining gas stream (33% $H_2S$) is sent to conventional Claus plant for converting $H_2S$ to elemental sulfur.

The stripped solution is reheated to 174 F and pumped to an absorber where makeup $CO_2$ and some $H_2S$ are absorbed from the fuel gas according to the following reactions:

$$Na_2CO_3 + CO_2 + H_2O \quad 2NaHCO_3 \qquad (6\text{-}16)$$
$$Na_2CO_3 + H_2S \quad NaHCO_3 + NaHS \qquad (6\text{-}17)$$

This makeup $CO_2$ is required to compensate for $CO_2$ losses such as the $CO_2$ lost in the $H_2S$ stripper and $CO_2$ lost in the gasifier by reaction of sodium carbonate with sulfur to form $Na_2S$. The makeup $CO_2$ absorber operates at the fuel gas pressure and at high temperature (175 F) in order to minimize the amount of water condensed from the fuel gas.

The solution is further carbonated with recycle $CO_2$ to precipitate solid sodium bicarbonate in the carbonation tower. The solution is cooled from 196 F to 140 F in the carbonation tower. At 140 F the sodium bicarbonate exceeds its solubility limit, and precipitates out of the solution.

The resulting slurry with 12% solids is separated by a combination of hydroclones and centrifuges. Sodium bicarbonate with 12% moisture is decomposed by indirect steam heating at 350 F in a fluidized bed calciner to produce sodium carbonate for recycling to the gasifier melt. The $CO_2$ produced during decomposition is recycled to the carbonation tower. The filtrate solution, along with condensate from other parts of the process is recycled to the slag quench and dissolving tanks.

## DESULFURIZATION PROCESS DESCRIPTIONS

### Selexol Process Description

The Selexol process, developed by Allied Chemical Corp., is a physical absorption process. It uses the Selexol solvent (dimethyl ether of polyethylene glycol) (Reference 6-6) to selectively remove $H_2S$ in the presence of $CO_2$. Commercial applications currently include both selective absorption and bulk removal of acid gas.

For this application, a typical schematic is shown in Figure 6-7. Raw gas enters the absorber after having been cooled by heat exchange with the product gas. Where a high degree of COS removal is required, gas from the flash tank also enters at the bottom of the absorber. This is necessary to improve the process selectivity for COS with respect to $CO_2$. For the

## TYPICAL FLOW DIAGRAM—SELEXOL ACID GAS REMOVAL PROCESS

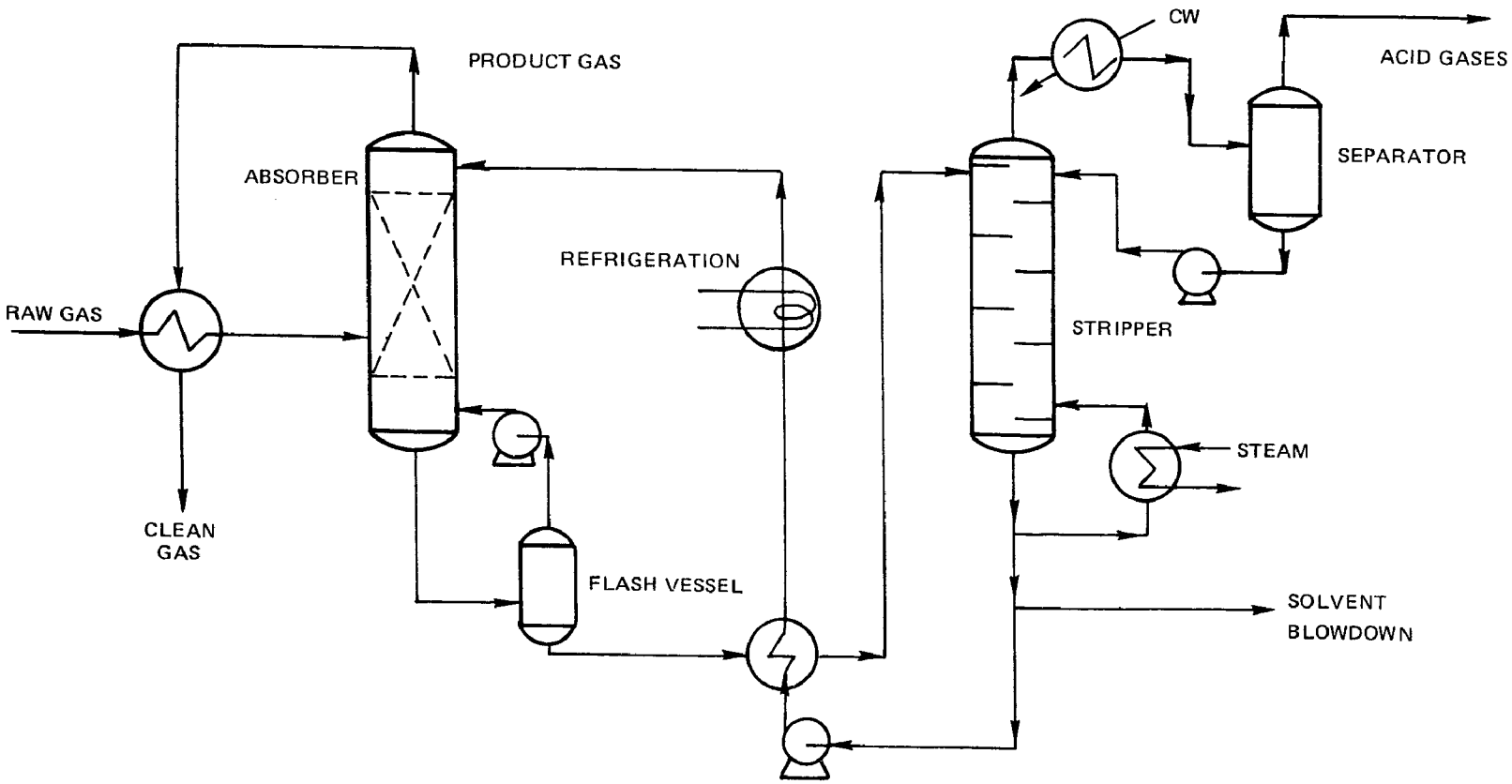


FIG. 6–7

78–01–287–3

basic systems currently under study, COS levels were not sufficiently high to warrant sizing of the system for any gases other than $H_2S$ and the flash tank and recycle compressor were not required. To achieve very low emissions, systems designed for COS removal were also investigated.

Lean solvent, having been cooled by heat exchange with the rich solvent from the bottom of the absorber, is further cooled by refrigeration and introduced at the top of the absorber. Almost all of the $H_2S$ is absorbed as the gas flows up through the tower. COS is less soluble and only 30 percent of that component is removed. Approximately 15 percent of the $CO_2$ is removed along with minor amounts of the other gases. The solvent vapor pressure is quite low (0.0002 mmHg at 60 F) (Reference 6-6) so that it does not contaminate the product gas.

The rich solvent is let down in pressure through a power recovery turbine and the absorbed gases are recovered by a combination of pressure letdown and stripping. Heat of absorption is low and most of the steam is needed to maintain the temperature differential between absorber and stripper. Acid gas to the Claus plant contains between 24 and 39 percent $H_2S$.

Other sulfur compounds, such as methyl mercaptan, carbon disulfide and thiophene are more soluble than $H_2S$ and will be removed if present. The solvent is not degraded by impurities in the fuel gas. This, combined with the low vapor pressure, results in very low solvent makeup requirements.

Conoco Process Description

The process is shown in block diagram form in Figure 6-8. The raw gas passes through the fluidized bed desulfurizer where both $H_2S$ and COS are removed. Dolomite is regenerated with a mixture of carbon dioxide and steam and the off gas sent to the sulfur recovery unit. Because the dolomite gradually becomes non-reactive, approximately 2 percent of the recirculating dolomite acceptor must be withdrawn and replaced. This is processed prior to discharge to convert the CaS to $CaCO_3$.

In addition to make-up dolomite, both steam and carbon dioxide are needed in the regenerator and spent dolomite converter. Steam is available from the bottoming cycle and the carbon dioxide must be separated from either the fuel gas or the gas turbine exhaust gas stream.

A schematic of the equipment arrangement and flow paths is shown in Figure 6-9. The process is described fully in Reference 6-7 and the systems used herein are based on the basic design presented in that report.

Gasifier product gas flows to the bottom of a fluidized gas desulfurizer. Most of the $H_2S$ in the gasifier gas reacts with the $CaCO_3$ component of the dolomite as follows:

## CONOCO PROCESS BLOCK DIAGRAM

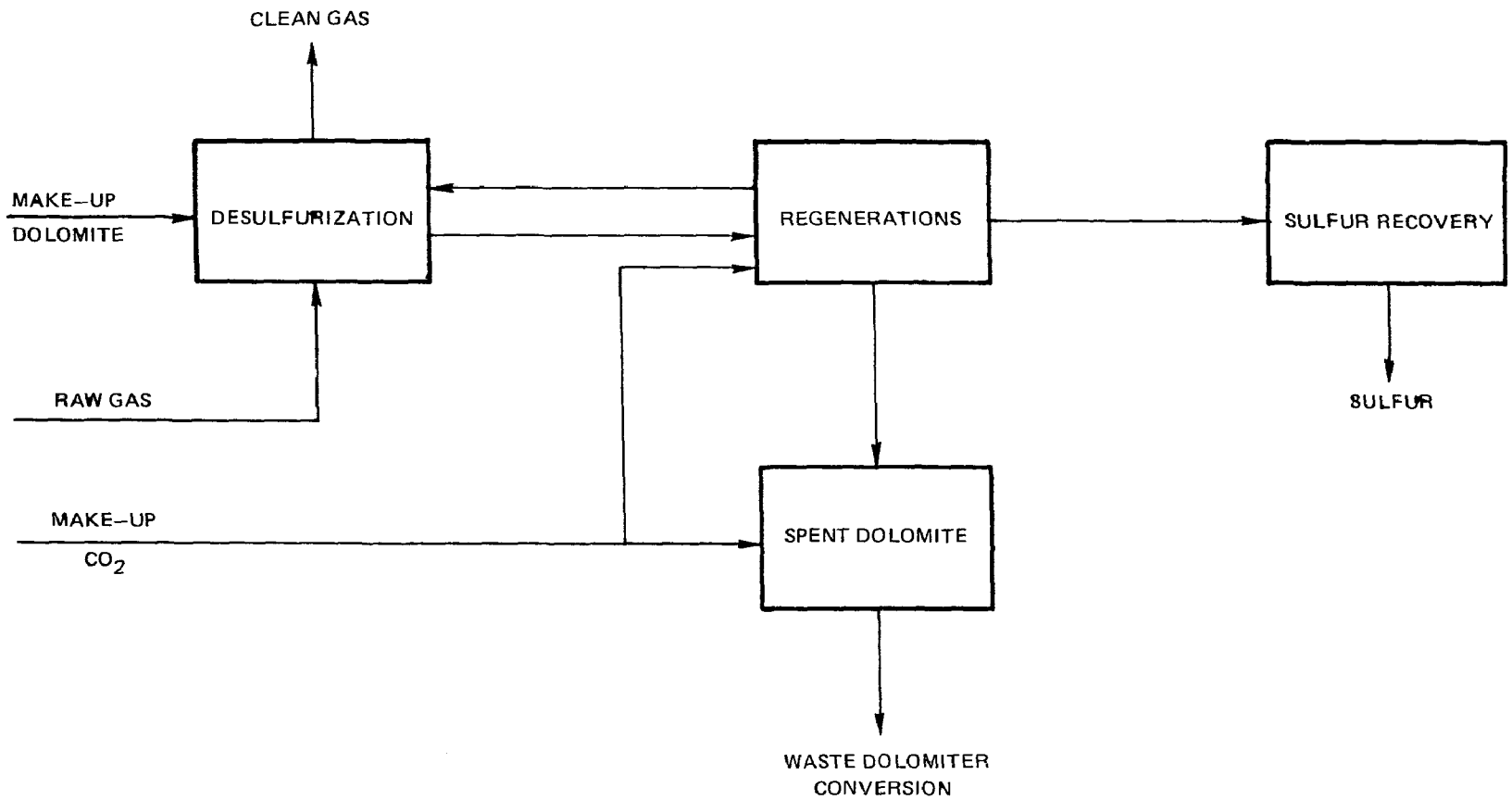


FIG. 6-8



78-03-160-5

## CONOCO HIGH – TEMPERATURE DESULFURIZATION

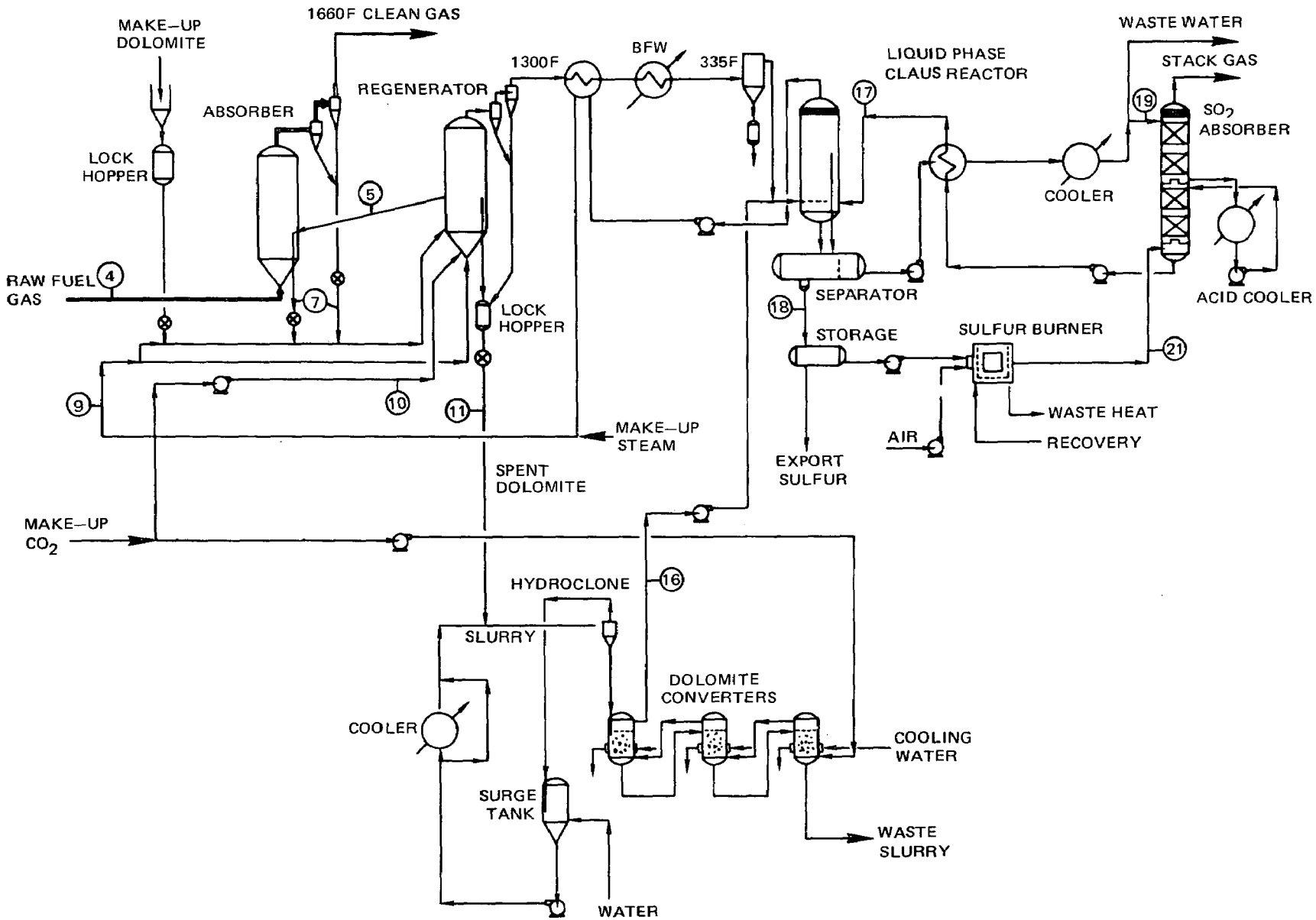


FIG. 6–9

$$H_2S + MgO \cdot CaCO_3 \rightarrow MgO \cdot CaS + CO_2 + H_2O \qquad (6\text{-}18)$$

Although no data have been reported for the COS absorption high removal efficiencies are predicted according to the reaction:

$$COS + MgO \cdot CaCO_3 \rightarrow MgO \cdot CaS + 2CO_2 \qquad (6\text{-}19)$$

The desulfurized gas must then be cleaned of particulates and cooled prior to use in the combined cycle. This integration process is discussed in other sections of this report. The effect of gasifier operating conditions on the degree of desulfurization is discussed in Section 8.

The fluidized acceptor regenerator is maintained at 1300 F. The sulfided acceptor is recarbonated at these conditions by the reverse reaction,

$$MgO \cdot CaS + CO_2 + H_2O \rightarrow MgO \cdot CaCO_3 + H_2S \qquad (6\text{-}20)$$

The carbonated magnesium component of the make-up acceptor is also calcined at these conditions,

$$MgCO_3 \cdot CaCO_3 \rightarrow MgO \cdot CaCO_3 + CO_2 \qquad (6\text{-}21)$$

Spent acceptor (2 percent of the circulating flow) is withdrawn from the regenerators. This spent acceptor must be treated before disposal. Over 75 percent of the calcium component of this stream is in the form of CaS. If this were disposed of directly to the station ash pit, $H_2S$ gas would slowly evolve as the CaS was hydrolyzed. To avoid this condition, the spent acceptor is directly contacted with $CO_2$ and water in three stages of stirred reactors to convert the CaS to $CaCO_3$. The overall reaction is,

$$MgO \cdot CaS + 2CO_2 + H_2O \rightarrow MgCO_3 \cdot CaCO_3 + H_2S \qquad (6\text{-}22)$$

Acid gas resulting from the acceptor stripping operation is passed through two stages of cyclones to remove entrained acceptor. The sensible heat content of this stream is then exchanged with recycle gas and with boiler feed water. Electrostatic precipitators are provided to remove entrained dust. The gas then flows to the bottom of the liquid-phase Claus reactor.

The concentration of $H_2S$ in the gas from the acceptor regenerators is only about 3.6 volume percent. The liquid-phase Claus reaction developed for this process is uniquely suited to processing this gas. This was demonstrated during the experimental work described in Reference 6-8. Liquid sulfur is produced by the reaction,

$$2H_2S + H_2SO_3 \rightarrow 3\ S + 3\ H_2O \qquad (6\text{-}23)$$

Liquid sulfur and liquid water flow from the reactor to a decanter-type separator. Unreacted gas, saturated with water vapor at 310 F, is compressed and returned to the acceptor regenerator reactor.
The sensible heat content of the liquid water from the separator is exchanged with the feed acid and charged to the $SO_2$ absorption tower. A slip stream of water is rejected to maintain water balance.

Approximately one-third of the sulfur produced is burned with stoichiometric air to produce $SO_2$ in the pressurized combustor. Excess heat is removed via cooling tubes in the walls. Water flowing down through the packed tower absorbs the $SO_2$ in the gas by,

$$SO_2 + H_2O \rightarrow H_2SO_3 \quad \text{aqueous.} \qquad (6\text{-}24)$$

Most of the exothermic heat of reaction is removed by side stream coolers. The vent gas from the absorption tower is at 90 F and 205 psia. It probably would contain some residual $SO_2$ (assumed in this case as 0.3 volume percent).

## Sulfur Recovery

In the case of the Conoco process, sulfur recovery is an integral part of the process. For low-temperature processes, where acid gas is produced with greater than 20 percent $H_2S$, the Claus process is used extensively. While it is a direct means of recovering elemental sulfur, recovery efficiency is generally in the 90 to 98 percent range and the tail gas can contain a significant amount of sulfur as $H_2S$, $SO_2$ or COS. Simple incineration of the tail gas is one possibility. In this study, the use of a Beavon unit for tail gas sulfur removal was elected. Both the Claus and Beavon units are described below.

## Claus Sulfur Recovery

The basic Claus process was developed in the late nineteenth century. Since that time, many modifications have been made in the process by various engineering firms. The overall reaction that is the basis of the process is:

$$3H_2S + 1.5O_2 \rightarrow 3S + 3H_2O + 286{,}000\ \text{Btu} \qquad (6\text{-}25)$$

There are four principal variations of the process used in the United States (Reference 6-9):

Direct oxidation
Split flow
Straight through
Sulfur recycle

All are based on the same principle but find use depending on the acid gas concentration in the feed.

In the original Claus process, called "direct oxidation", $H_2S$ was partially oxidized with air over a bauxite or iron ore catalyst in a single reactor. The reaction (6-25), which is highly exothermic, resulted in excessive temperatures and poor yields. This led to recycle of the tail gas for temperature control. It is now used for dilute acid feeds.

Two improvements were introduced in the 1930's by I.G. Farben. These are the "split flow" and "straight through" versions shown in Figure 6-10. In the "split flow" process, which is used here, one third of the $H_2S$ is burned completely to sulfur dioxide in a waste heat boiler:

$$H_2O + 1.5O_2 \longrightarrow SO_2 + H_2O + 236{,}000 \text{ Btu.} \qquad (6\text{-}26)$$

The $SO_2$ is then reacted with the remainder of the $H_2S$ over the catalyst:

$$2H_2S + SO_2 \longrightarrow 3S + 2H_2O + 50{,}000 \text{ Btu,} \qquad (6\text{-}27)$$

and less heat is involved.

In the "straight through" version, which is used at high (50 to 100 percent) $H_2S$ concentrations, the acid gas is partially oxidized as in the direct oxidation process but in a waste heat boiler rather than over a catalyst. A large part of the conversion is achieved in the boiler and the cooled gas is sent to one or more catalytic stages for the desired conversion.

The acid gas streams feeding Claus plants sometimes contain so little $H_2S$ that reaction temperatures cannot be maintained without supplemental heat. This gives rise to additional Claus plant variations, including addition of hydrocarbons to acid gas ahead of the burner and/or indirect preheating of the acid gas and/or air ahead of the burner or catalytic reactor.

One Claus plant variation, particularly useful for dilute acid gas having low sulfur oxide content, is called "sulfur recycle." In this, some product sulfur is burned with air to produce $SO_2$ and heat. The resultant stream is mixed with the acid gas in the appropriate ratio and sent to a

## CLAUS SULFUR RECOVERY PROCESS

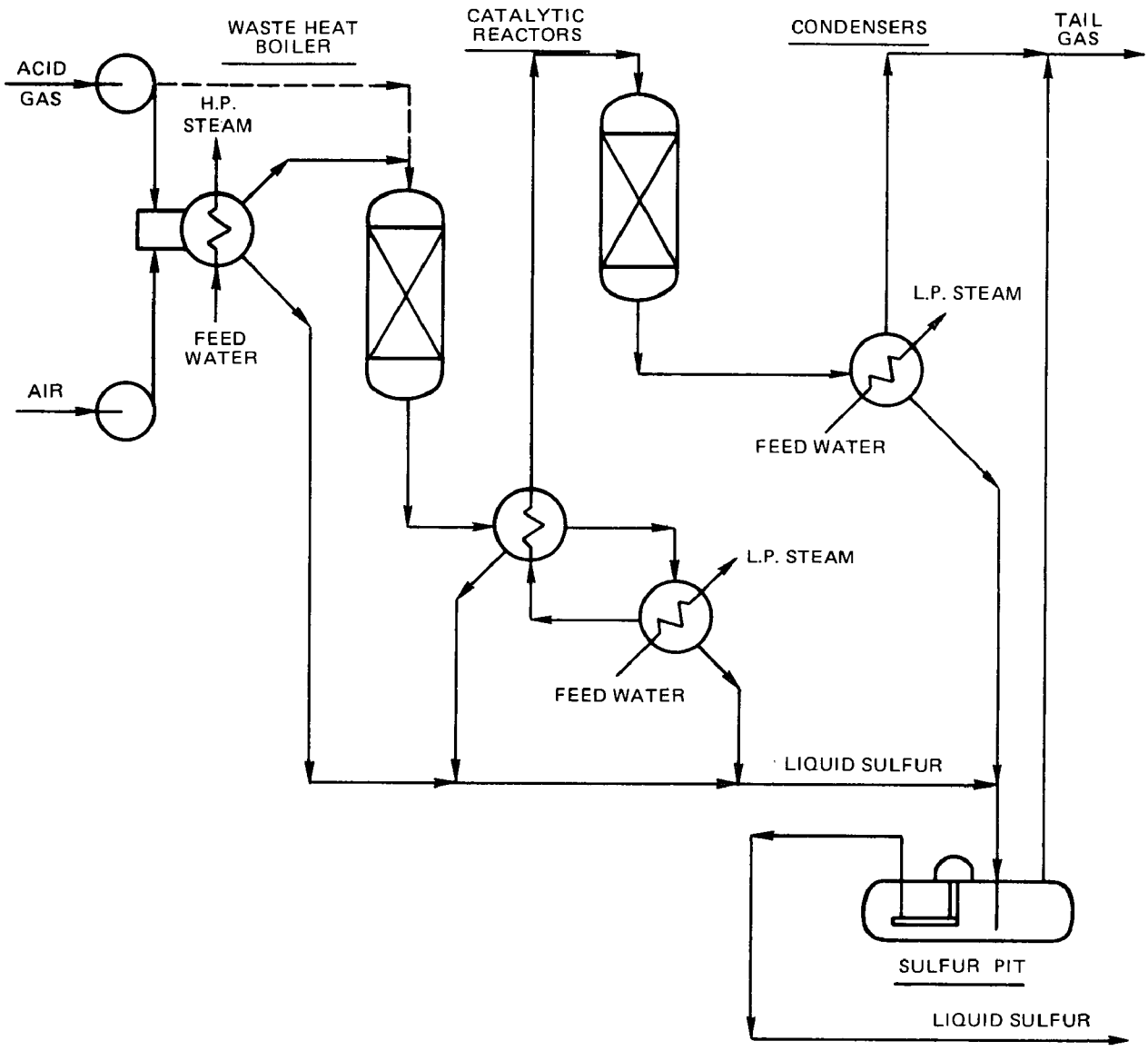


NOTES:

1. DASHED LINE IS ADDED FOR THE SPLIT–FLOW VERSION OF THE PROCESS

2. ADDITIONAL SECTIONS CONSISTING OF CATALYTIC REACTOR AND CONDENSERS CAN IMPROVE CONVERSION EFFICIENCY

catalytic reactor. This variation is applicable to $H_2S$ concentrations of less than 15 percent.

Complete conversion to sulfur is prevented by equilibrium limits in the reactor. Improved conversion is achieved by adding reactor stages. The products of conversion are sulfur vapor and water vapor. They are condensed and removed between stages. Conversion efficiencies are generally in the mid-ninety percent range but up to 98 percent is attainable. The sulfur product is 99.9 percent pure and can be marketed.

Beavon Tail Gas Treating - This process consists of a hydrogenation step followed by a Stretford section for sulfur conversion. Named for D. K. Beavon, the process was developed by the Ralph M. Parsons Company. Final tail gas concentrations in the range of 40 to 80 ppm sulfur (as $SO_2$) have been reported for the process.

In the process, entering tail gas is mixed with hot flue gas as shown in Figure 6-11. Sufficient hydrogen is supplied, either with the tail gas or by fuel-rich combustion in the burner, to convert all the sulfur to $H_2S$. This is done over a cobalt-molybdate catalyst at temperatures between 550 and 750 F.

In the Stretford section, the $H_2S$ is reacted with oxygen to form elemental sulfur and water. The process uses the following reaction sequence:

Absorber -

$$H_2S + Na_2CO_3 \longrightarrow NaHS + NaHCO_3 \qquad (6\text{-}28)$$

Reaction hold tank -

$$4NaVO_3 + 2NaHS + 2H_2O \longrightarrow Na_2V_4O_9 + 4NaOH + 2S \qquad (6\text{-}29)$$

$$Na_2V_4O_9 + 2NaOH + H_2O + ADA \longrightarrow 4NaVO_3 + 2ADA \text{ (reduced state)}$$

Oxidation tank -

$$2ADA \text{ (reduced state)} + O_2 \longrightarrow 2ADA + H_2O \qquad (6\text{-}30)$$

In the absorber, $H_2S$ reacts with sodium carbonate solution to form sodium bicarbonate and sodium hydrosulfide. The catalytic sodium vanadate solution reacts with the NaHS in the hold tank to form elemental sulfur. Air blowing with sodium anthraquinone disulfonate (ADA) regenerates the sodium vanadate catalyst. The ADA is regenerated by oxidation.

The overall effectiveness of the Beavon process is dependent on conversion efficiency of sulfur compounds to $H_2S$ and subsequent efficiency of the Stretford unit. High conversion efficiencies are predicted for S, $SO_2$, COS and $CS_2$ (Reference 6-10). The Stretford is capable of reducing the $H_2S$ content to less than 1 ppm.

## BEAVON TAILGAS CLEANUP PROCESS

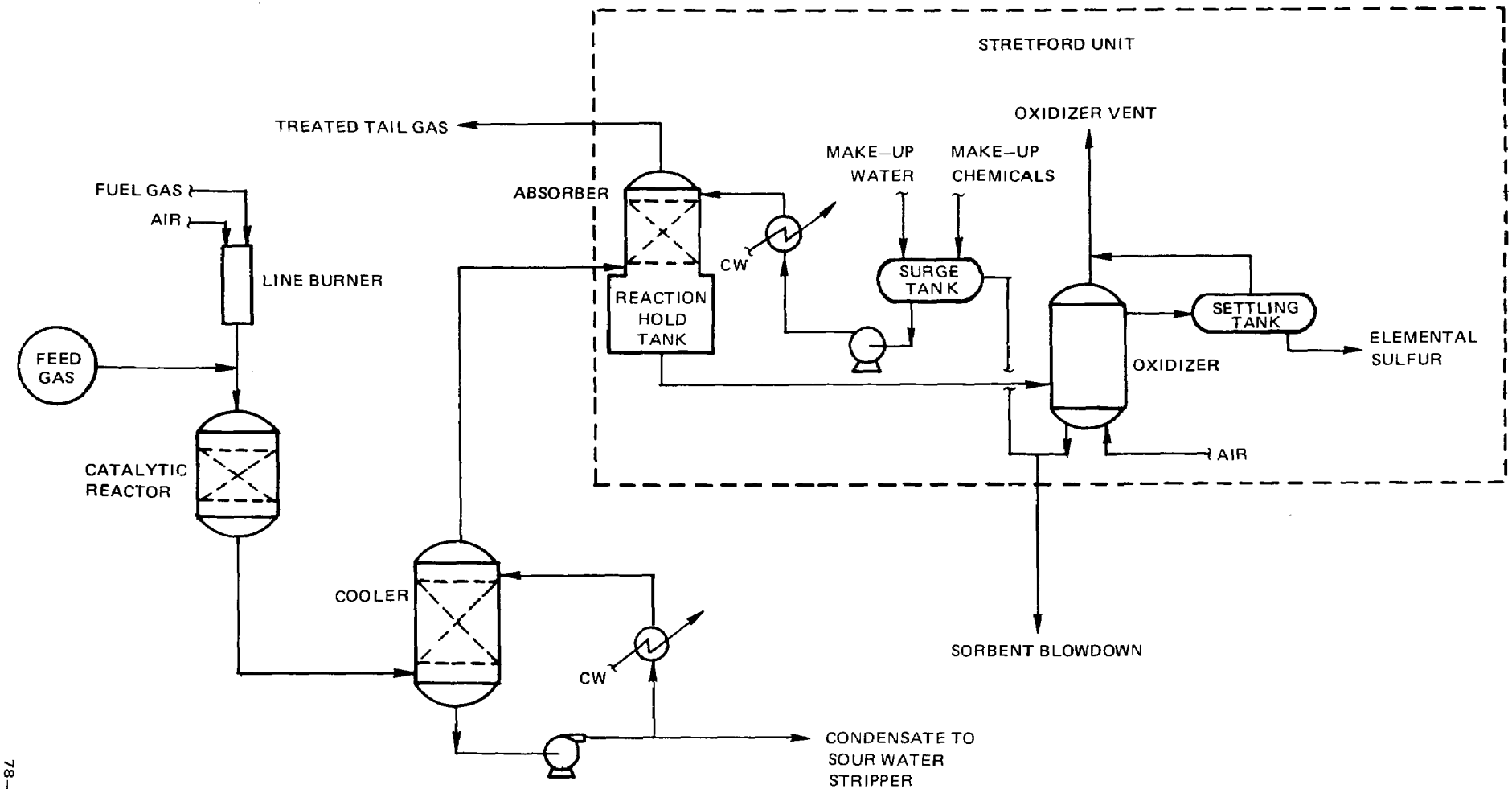


FIG. 6–11



78–01–287–2

## REFERENCES


6-1 Robson, F. L., A. J. Giramonti, W. A. Blecher and G. Mazzella: Fuel Gas Environmental Impact, Phase Report. EPA-600/2-75-078 (NTIS No. PB 249-424), November 1975.

6-2 Robson, F. L., W. A. Blecher and C. B. Colton: Fuel Gas Environment Impact. EPA-600/2-76-153,(NTIS No. PB257-134), June 1976.

6-3 Patel, J. G.: Clean Fuel from Coal is Goal of U-Gas Process. Oil and Gas Journal,Vol. 75, No. 31, August 1, 1977.

6-4 Hegarty, W. P. and B. E. Moody: Evaluating the Bi-Gas SNG Processes. Chem. Eng. Progress, Vol. 69, No. 3:37, March 1973.

6-5 Holzberger, T. W.: Combined Cycle Power Generation Using Molten Salt Coal Gasification. The Fourth Annual International Conference on Coal Gasification, Liquifaction and Conversion to Elecricity, University of Pittsburgh, August 2-4, 1977.

6-6 Valentine, J. P.: Gas Purification with Selexol Solvent in the New Clean Energy Proceses. American Chemical society, 167th National Meeting, Los Angeles, California, April 1974.

6-7 Curran, G. P., B. J. Koch, B. Pasek, M. Pell, and E. Gorin: High Temperature Desulfurization of Low-Btu Gas. EPA-600/7-77-031 (NTIS No. PB271-008), April 1977.

6-8 Curran, G. P., J. T. Clancey, B. Pasek, M. Pell, G. D. Rutledge, and E. Gorin: Production of Clean Fuel Gas from Bituminous Coals. Report to Office of Research & Devlopment, U.S. Environmental Protection Agency, Under Contract EHSD 71-15, Period - March 1972 to June 1973, EPA Report No. 650/2-73-049, (NTIS No. PB 232-695/AS) December 1973.

6-9 Baers, W. D.: Characterization of Claus Plant Emissions. EPA-R2-73-188, (NTIS No. PB220-376), April 1973.

6-10 Cavanaugh, E. C., et al.: Technology Status Report: Low/Medium Btu Coal Gasification and Related Environmental Controls, EPA600/7-77-125B, (NTIS No. PB274-843), June 1977.

## SECTION 7

## COMBINED-CYCLE POWER GENERATION SYSTEMS

### INTRODUCTION

The term "combined cycle" can be used for a variety of systems where two cycles operating at different temperatures are interconnected. The heat rejected by the higher-temperature cycle is recovered and used in the lower-temperature cycle to produce additional power and improve overall conversion efficiency. The higher-temperature cycle is referred to as a topping cycle while the lower-temperature cycle is called a bottoming cycle. The combination used in this study is a gas turbine topping cycle with a steam bottoming cycle. It is currently the only combination of commercial significance.

A simplified schematic of the combined gas- and steam-cycle plant is shown in Figure 7-1. Exhaust gases leaving the gas turbine are typically at a temperature near 1000 F. This places an upper limit on the steam temperature generated in the waste heat boiler. As higher steam temperatures are generally associated with a higher steam cycle thermal efficiency, it is desirable to raise the gas turbine exhaust temperature. To do this would mean a decrease in the work extracted from the gas turbine cycle. Clearly, there is a tradeoff between gas turbine and steam cycle parameters. This trade-off is made even more complex by the addition of the gasification and cleanup processes. These present a source of heat to raise steam for the bottoming cycle. They also use steam that can be extracted from the steam cycle after doing some useful work.

The current study uses gas turbine and steam-cycle parameters that were developed as part of a DOE-sponsored study, the High Temperature Turbine Technology Program (HTTTP). As part of that program, parametric studies were conducted to determine the optimum combination of gas turbine inlet temperature, pressure ratio, metal cooling methods, steam cycle conditions and various other factors affecting overall power generating efficiency. All of these were evaluated in the context of a system comprised of a molten salt type gasification system integrated with a combined cycle power plant. This section presents a review of the process that led to the HTTTP selection of a combined cycle power plant having the following characteristics:

## WASTE–HEAT COMBINED GAS AND STEAM TURBINE SYSTEM

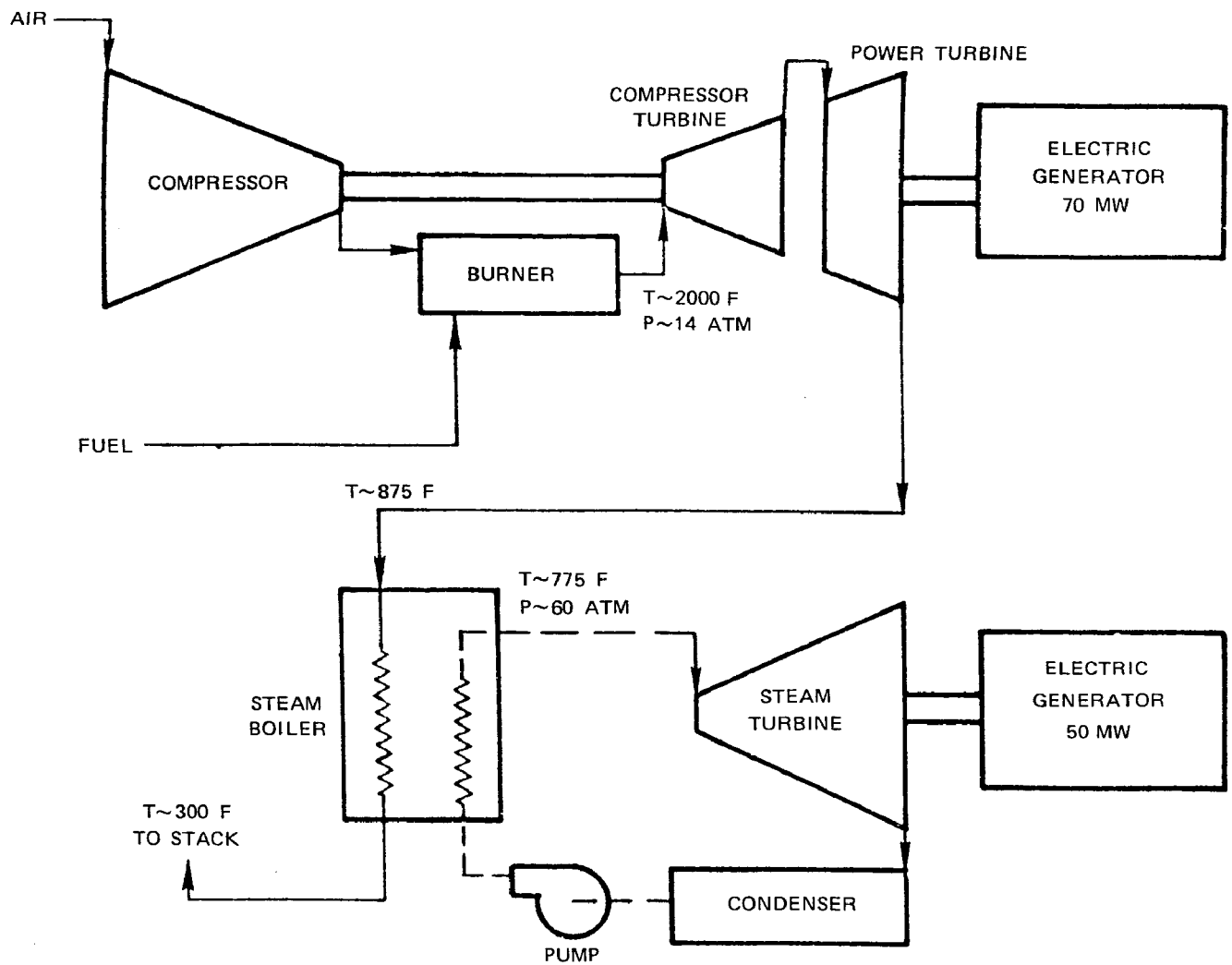


FIG. 7–1

| | |
|---|---|
| Gas turbine pressure ratio | 18:1 |
| Gas turbine firing temperature | 2600 F |
| Static parts cooling fluid | Water |
| Rotating parts cooling fluid | Pre-cooled air |
| Steam cycle pressure | 2400 psi |
| Steam temperature | 950 F |
| Reheat temperature | 950 F |

These same characteristics have been used with the exception of the cooling method for the static parts. The use of ceramic vanes which require no cooling has been assumed. This results in a very minor change in gas turbine performance. Previous phases of this EPA study had used a 24:1 gas turbine pressure ratio and non-reheat steam cycle. The reduced gas turbine pressure ratio results in exhaust temperatures which in concert with waste heat from the gasifier are able to support the high performance steam cycle. The result is a significant improvement in overall power generating efficiency

GENERAL PARAMETRIC ANALYSES

Analyses performed in earlier phases of this program and in the HTTT program were first directed towards defining the operating conditions of the gas-turbine engine. This was done by conducting trade-off studies that relate the interaction of engine pressure and temperature levels to performance levels and design requirements. Initially, these conditions were defined with respect to the engine alone, then modified to account for the interactions with the remainder of the system, thereby identifying a gas-turbine engine that provides an overall optimum system. For example, typical curves relating to the interactions among compressor pressure ratio and turbine cooling techniques with open-cycle gas turbine engine power output and efficiency are shown in Figure 7-2. This figure indicates that, while the relationship of performance and specific power is a strong function of cooling system type, there is a range of compressor pressure ratios generally between 12:1 and 24:1 which demonstrates a compromise between specific power, which is a measure of capital cost, and efficiency.

However, when the steam bottoming cycle is added to the design, the problem of optimizing the gas turbine becomes more complex. Two of the more important factors considered were the effects of the gas turbine operating point on steam system efficiency and the relative costs of the two systems. Increasing the compressor pressure ratio of the gas turbine while maintaining the defined turbine temperature has the effect of increasing the work output of the engine and decreasing the engine exhaust temperature. Although this augments the performance of the gas turbine cycle, it leaves less energy for the steam bottoming cycle. As a result, because the exhaust temperature is lower, the steam temperature is lower and the efficiency of the steam cycle is then lower. Thus, the goal is to select an operating condition that provides the highest overall performance.

## OPEN CYCLE GAS–TURBINE ENGINE PERFORMANCE TRADE–OFF CURVES

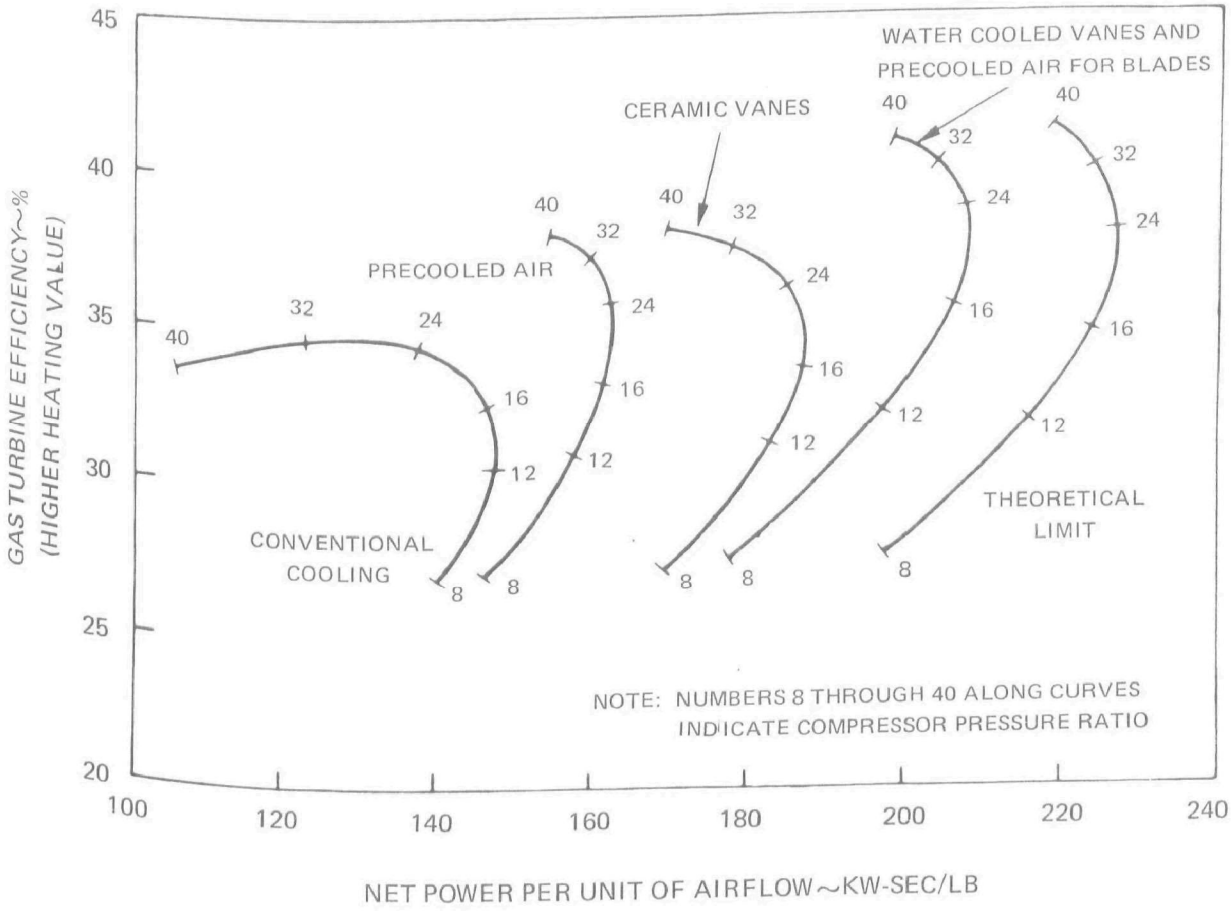


78–03–160–2

Definition of the steam bottoming cycle is dependent upon the waste heat available from the gasifier and cleanup system as well as that available from the gas turbine exhaust stream.

Analyses were performed to obtain the best match among these components for a definition of the best overall powerplant performance and cost. The two key items are the steam turbine and the waste heat boiler. The selection of operating conditions for these components seeks to ensure a sufficiently high rate of heat transfer by maintaining sufficient temperature difference between the gas turbine engine exhaust and the steam being heated in the waste heat boiler. The smaller this temperature difference, the larger and more costly the heat exchanger must be. In contrast, the larger the difference, the more overall efficiency decreases. These effects are discussed under thermal integration in Section 8. Selection of a "standard" combined-cycle power plant results in a slight penalty for some of the systems studied, but did not materially affect the overall conclusions.

On the basis of results acquired from general parametric studies, it is possible to identify the areas of interest concerning gas turbine and steam turbine operating characteristics. Figure 7-3 shows the generalized performance of simple-cycle and combined-cycle systems operating on liquid fuel, and demonstrates the expected effect with the integration of a coal gasification system. The range of interest defined for subsequent analyses is indicated by the shaded areas in Figure 7-3.

Operating Conditions

Gas turbine pressure ratio and firing temperature are the primary factors affecting overall system performance. However, the techniques used for cooling the high-temperature parts of the turbine and the allowable metal temperature have a direct bearing on performance at a given firing temperature. As part of the HTTT program for DOE, a metal temperature of 1600 F was selected as the maximum practical limit. Also, a cooling scheme that would make full utilization of existing technology was selected. It consists of water cooling for the static parts of the engine and the use of pre-cooled air for cooling the rotating turbine parts.

Using the molten salt gasifier, a parametric analysis was conducted. The results of this analysis indicated that an overall pressure ratio of 18:1 is nearly optimum for turbine stator inlet temperatures of 2600 F and 3000 F while a pressure ratio of 14:1 is nearly optimum for an operating temperature of 2400 F. Figure 7-4 presents the overall system efficiency versus net specific power as a function of the thermodynamic parameters of pressure ratio and turbine operating temperature. As indicated, as the turbine stator inlet temperature increases, the efficiency increases, but at a decreasing rate. The difference in maximum efficiencies between 2400 F and 2600 F is approximately one percent, whle the difference between 2600 F and 3000 F is 0.5 percent. In addition, the effect of pressure ratio on efficiency is less pronounced at the higher operating temperature levels. The difference between the optimum and lowest efficiency of the systems investigated is 1.5 percent at 3000 F, 2.8 percent at 2600 F, and 4.3 percent at 2400 F.

## TRENDS FOR COMBINED – CYCLE SYSTEMS

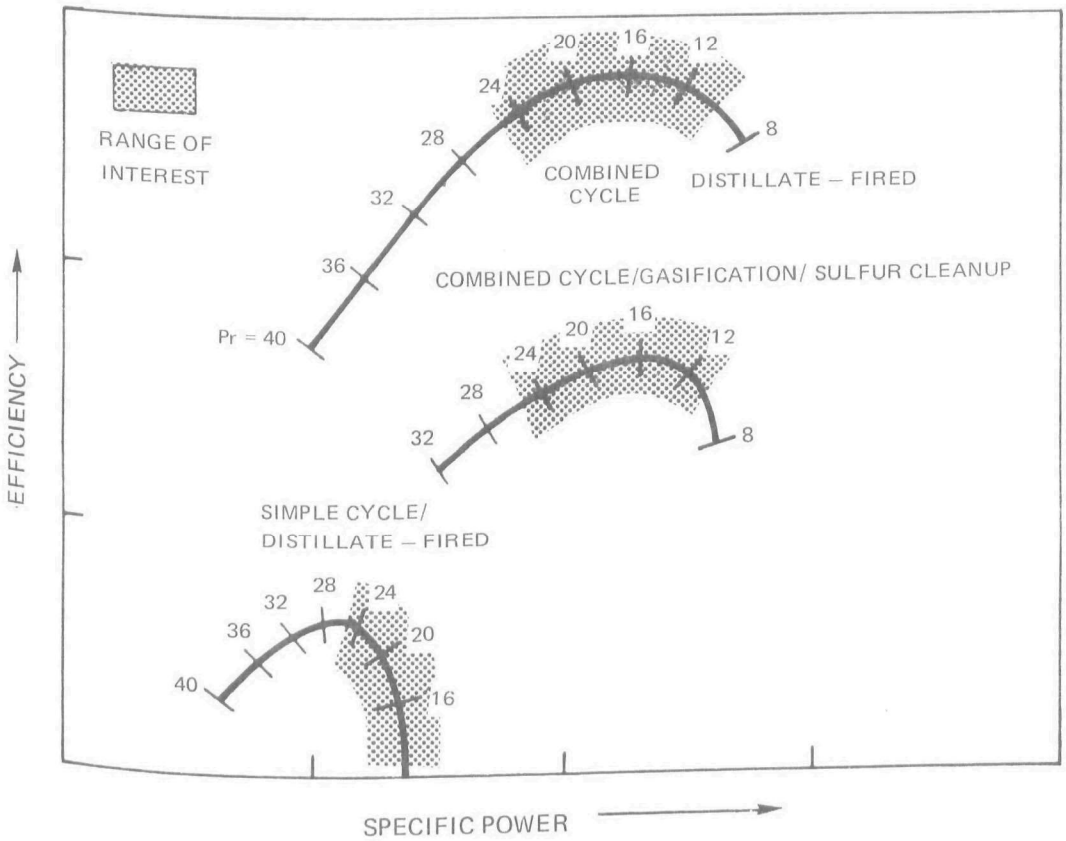


78–03–160–1

## HTTTP GAS TURBINE PARAMETRIC STUDY

$Wa_{gt}$ = 815.6 LB/SEC

$I_{SO}$ CONDITIONS

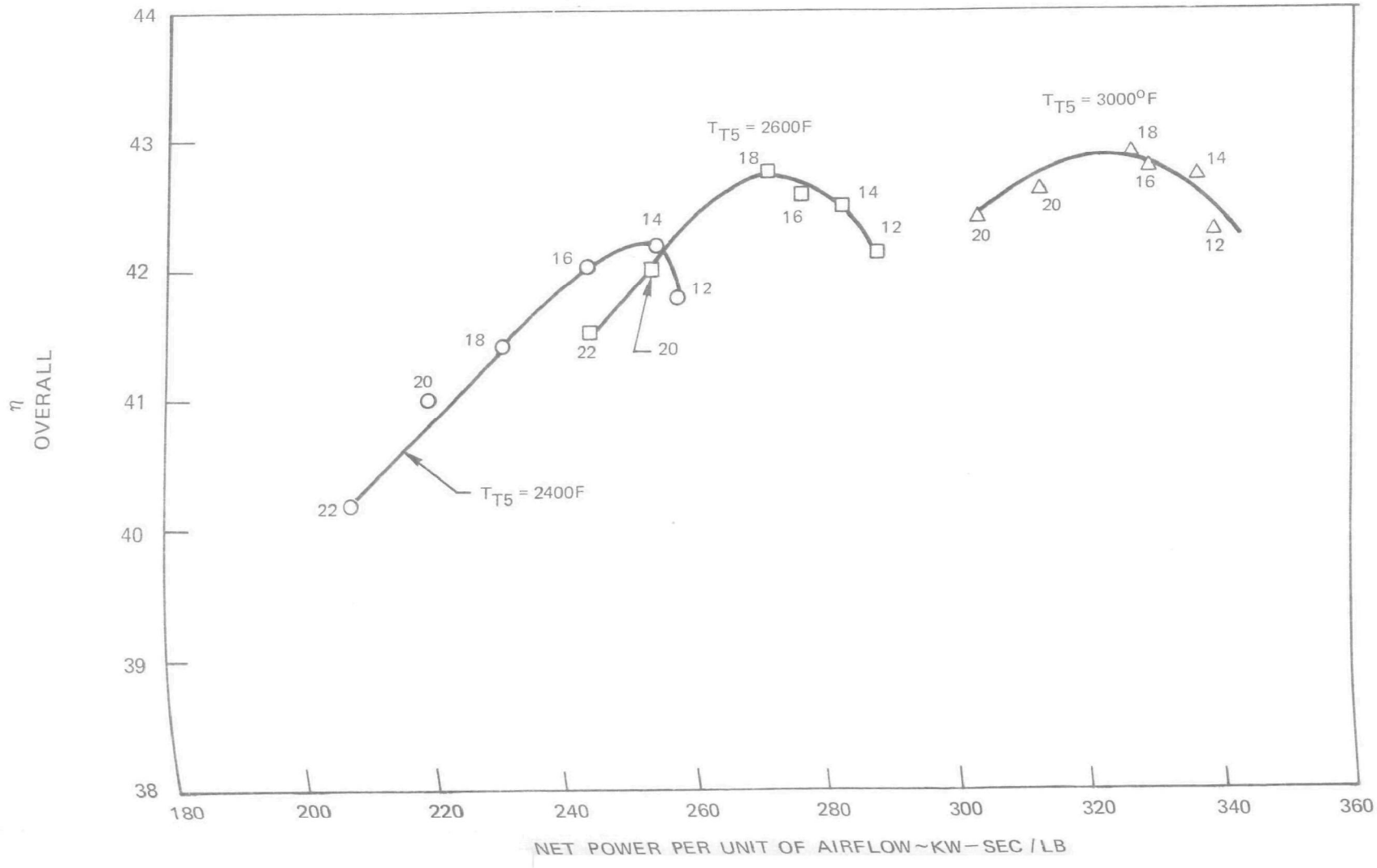

Using the data of Figure 7-4, a comparison of capital cost and heat rate can be made as shown in Figure 7-5. Taking cost and performance differences between a pressure ratio of 22 and 18 shows a capital cost increase of approximately $7.7 per kW as performance improves from a heat rate of 8224 to one of 7993 Btu/kWh. The capital expenditure to get such improvements in heat rate can be justified as coal costs exceed approximately $1.00 per million Btu. Because of the rapid trend in this direction, the higher efficiency appears to be desirable.

The costs for Figure 7-5 were developed using data from previous phases of the program. Power system costs were taken as $122 per gas turbine kW and $488 per steam turbine kW. Gasifier and cleanup costs are generally insensitive to pressure, at least over the range being considered here. For the pressurized equipment, theoretical relationships between pressure and vessel weight show weight to be independent of pressure. This would not hold true when comparing low- with high-pressure operation since at the low end, vessel or pipe thickness is dictated by considerations other than pressure. This is not the present case and the assumption of constant cost appears reasonable.

## Steam Cycle Conditions

Having selected an 18:1 pressure ratio for the gas turbine, with the stator inlet temperature of 2600 F, the effect of changes in steam cycle conditions was examined. The results are shown in Figure 7-6. Gas turbine pressure ratios of 12 and 18 were considered. As expected, higher steam cycle temperature and pressure does improve overall plant performance. However, for the 18:1 pressure ratio, improvement over the 2400 psi/950 F/950 F reheat cycle was only marginal. Because that steam cycle is less demanding in terms of waste heat boiler design, it should make integration of the other gasification processes easier while not compromising performance. It was therefore selected for use in the integration studies.

## EFFECT OF CHANGES IN PRESSURE RATIO

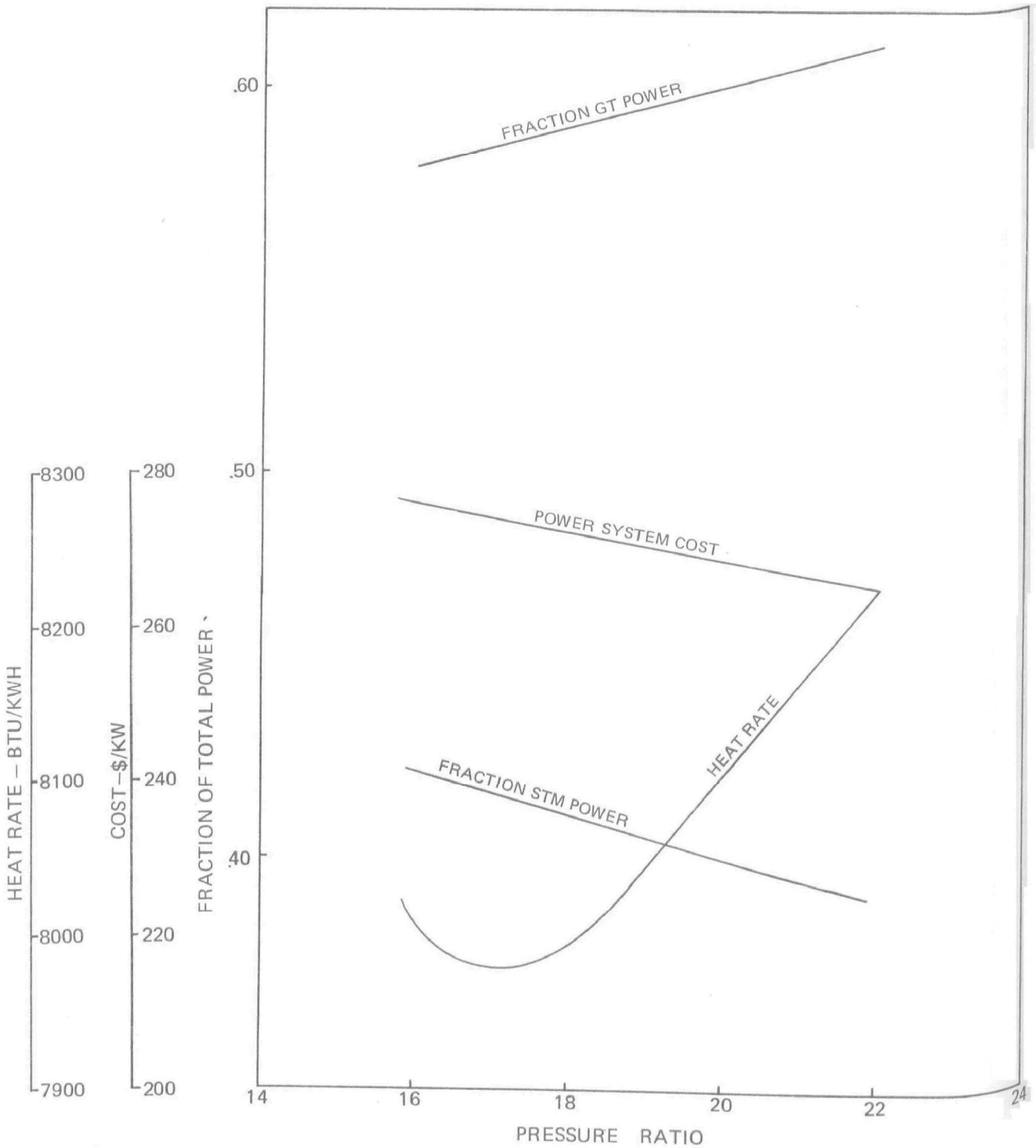

## RESULTS OF STEAM CYCLE PARAMETRIC STUDY

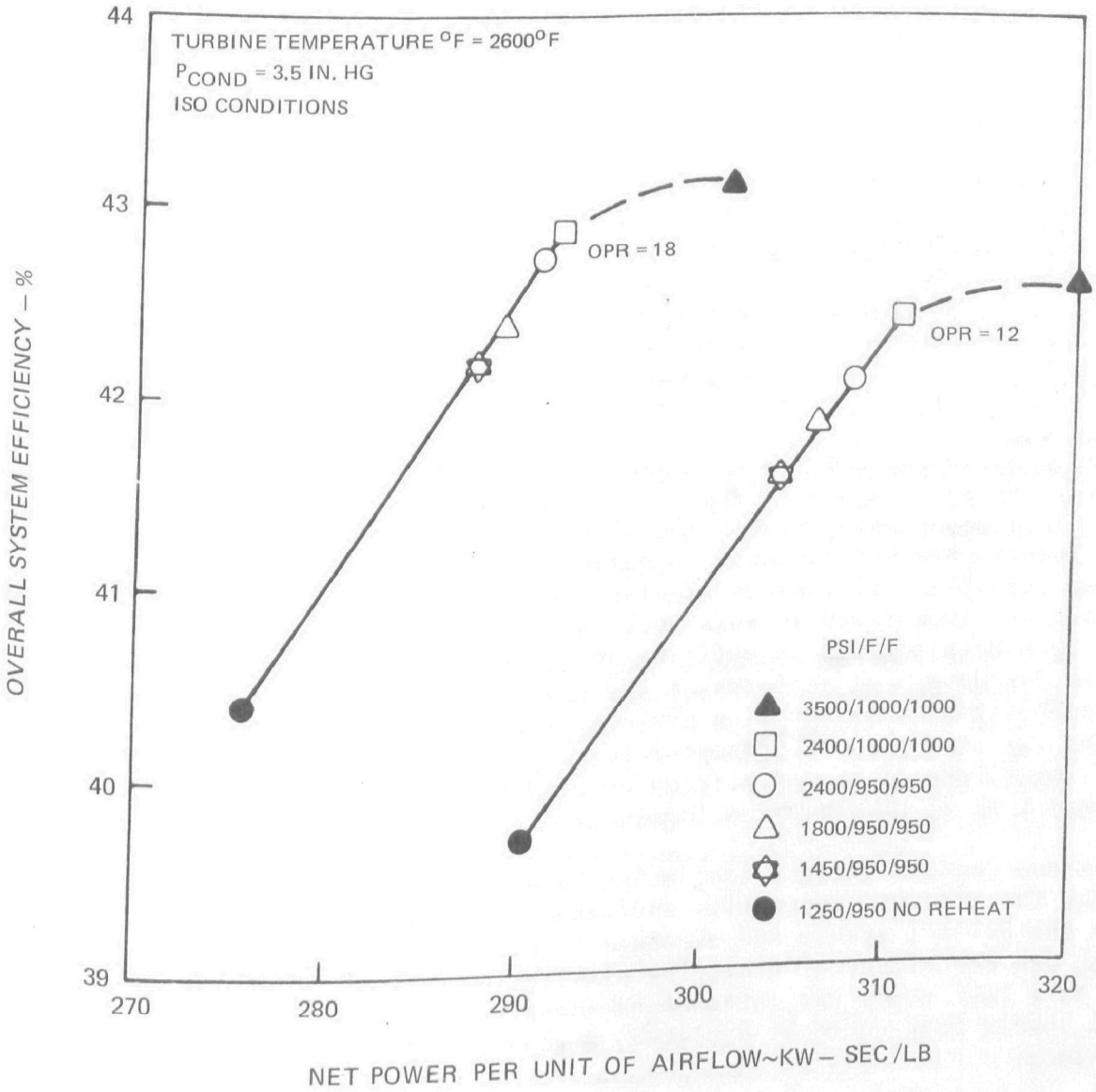


78–03–160–3

## SECTION 8

## INTEGRATION STUDIES

### INTRODUCTION

Thermal integration can have a significant effect on overall system performance. Effective thermal integration simply means utilizing available thermal energy with minimum temperature difference between the source and the substance it heats. Thermal energy is available from the gasifier jacket, hot raw fuel gas, turbine cooling air, gasifier bleed air as well as from some of the process waste heat. Much of this heat is available at a temperature level suitable for raising relatively high-pressure steam. Moreover, process heat requirements generally involve the use of low-pressure steam which can be withdrawn from the steam cycle after having done some useful work.

When considering the complete system, the highest efficiency in the use of thermal energy is achieved when it is converted at combined-cycle efficiency. This means using high-temperature cleanup or reheating the fuel gas after a low-temperature cleanup. A number of thermal integration studies, including the effect of fuel gas reheat, were conducted during the earlier phases and are summarized in this section. In general, the results of those studies have been applied in defining the current integrated system schematics used for determing performance and environmental intrusion. In the case of clean fuel gas temperature, a maximum limit of 1000 F was established to allow the use of a pre-mix combustor for $NO_x$ control. While this effectively limits some of the advantages of high-temperature cleanup, it appears to be essential if $NO_x$ emission levels are to be within allowable limits.

Besides thermal integration, other integration studies were conducted to determine the effects, especially environmental effects, of operating temperature on the Selexol system and of steam feed rate on the U-Gas gasifier. Also examined was the effect of achieving equilibrium in each of the gasifier effluents. This last study was intended to identify potential species and concentration levels that could be expected, at least on the basis of equilibrium predictions.

The Selexol solvent is quite sensitive to operating temperature level. In natural gas sweetening plants, absorbers generally run at subambient temperatures. Because of the utility industry's desire to avoid the

complexity of a refrigeration system as part of the process plant, a study of operating temperature was made. For the degree of sulfur removal considered in this study, refrigerated operation showed a decided advantage. Two different levels of sulfur removal were considered and the advantage of refrigerated operation was seen to increase with increased sulfur removal.

Earlier phases of this study had shown the effect of reduced steam feed to the gasifier. This improved cold gas efficiency and reduced the heat lost by condensation of water vapor in the raw fuel gas when it is cooled prior to desulfurization. Data used in this study for the BCR-type gasifier showed the lower steam feed rate (0.15 lb steam per lb coal vs. 0.57 lb steam per lb coal) resulted in a change in cold gas efficiency from 78.5 percent to 83 percent. This reduced steam feed rate also results in a lower air/coal ratio and a lower concentration of both $CO_2$ and $H_2O$ in the raw gas. These low concentrations tend to improve performance of the high-temperature Conoco desulfurizer.

For the U-Gas process, the effect of steam feed rate on desulfurizer performance was determined and the point of minimum practical steam feed (based on discussions with IGT) was used in the subsequent system evaluation. Performance improvements (approximately 3%) for the U-Gas system with low steam feed were also identified for low-temperature sulfur removal.

Gasifier modeling efforts of previous phases were continued. Considering the goals of this study, the most important part of the modeling effort was the adaption of the chemical equilibrium calculation procedure to model the gasification process. Use of this tool allowed equilibrium limits to be defined for the formation or reduction of potential pollutants.

## THERMAL INTEGRATION

The gas turbine operating parameters and steam cycle conditions have a significant effect on the overall thermal integration. Previous studies, for example, considered the use of a supplementarily fired waste heat boiler as a means of improving overall system performance. The idea was simply to raise the gas temperature in the boiler. This, in turn, allows improved steam conditions which increase steam cycle efficiency and improves the efficiency of utilization of waste heat. Overall efficiency is given by:

$$\eta_{cc} = \frac{\eta_{gt} + \left[(1 - \eta_{gt}) + \frac{W_s}{W_f}\right]\left(\frac{T_{ex} - T_{st}}{T_{ex} - T_a}\right)\eta_s}{1 + \frac{W_s}{W_f}} \qquad (8\text{-}1)$$

where

$\eta_{cc}$ = combined cycle efficiency

$\eta_{gt}$ = gas turbine efficiency

$\eta_s$ = steam cycle efficiency

$W_f$ = primary fuel flow

$W_s$ = supplementary fuel flow

$T_{ex}$ = gas turbine exhaust temperature

$T_a$ = ambient temperature

$T_{st}$ = stack temperature

A high turbine firing temperature combined with utilization of gasifier and raw fuel gas thermal energy make it possible to utilize a high-performance steam cycle without resorting to supplemental firing.

When there is no supplemental firing of the waste heat boiler, the equation simplifies to:

$$\eta_{cc} = \eta_{gt} + (1-\eta_{gt})\ \eta_s \frac{T_{ex} - T_{st}}{T_{ex} - T_a} \qquad (8\text{-}2)$$

and the importance of steam cycle efficiency is quite apparent, all other things remaining equal.

In each of the systems studied, virtually all steam is raised in the gasifier jacket and the hot fuel gas boiler. The gas turbine waste heat boiler is used almost exclusively for superheat, reheat and economizing. A typical Temperature Vs. Heat Flow (T-Q) curve for the waste heat boiler is shown in Figure 8-1. It shows the problems involved in utilizing the thermal energy of the turbine exhaust while maintaining minimum temperature differentials consistent with high-cycle efficiency. Because of the varying amounts of heat available from the gasifier, fuel gas stream, and other sources, waste heat boiler designs vary considerably among the various systems.

In the case of the oxygen-blown BCR type system with Selexol cleanup, the waste heat boiler is quite complex. In that system, it would be necessary to raise some steam at reheat pressure in the waste heat boiler to achieve a 300 F stack temperature which was set as a lower limit for all systems. Modification of the steam conditions could eliminate some of the

## TYPICAL T–Q DIAGRAM FOR WASTE HEAT BOILER

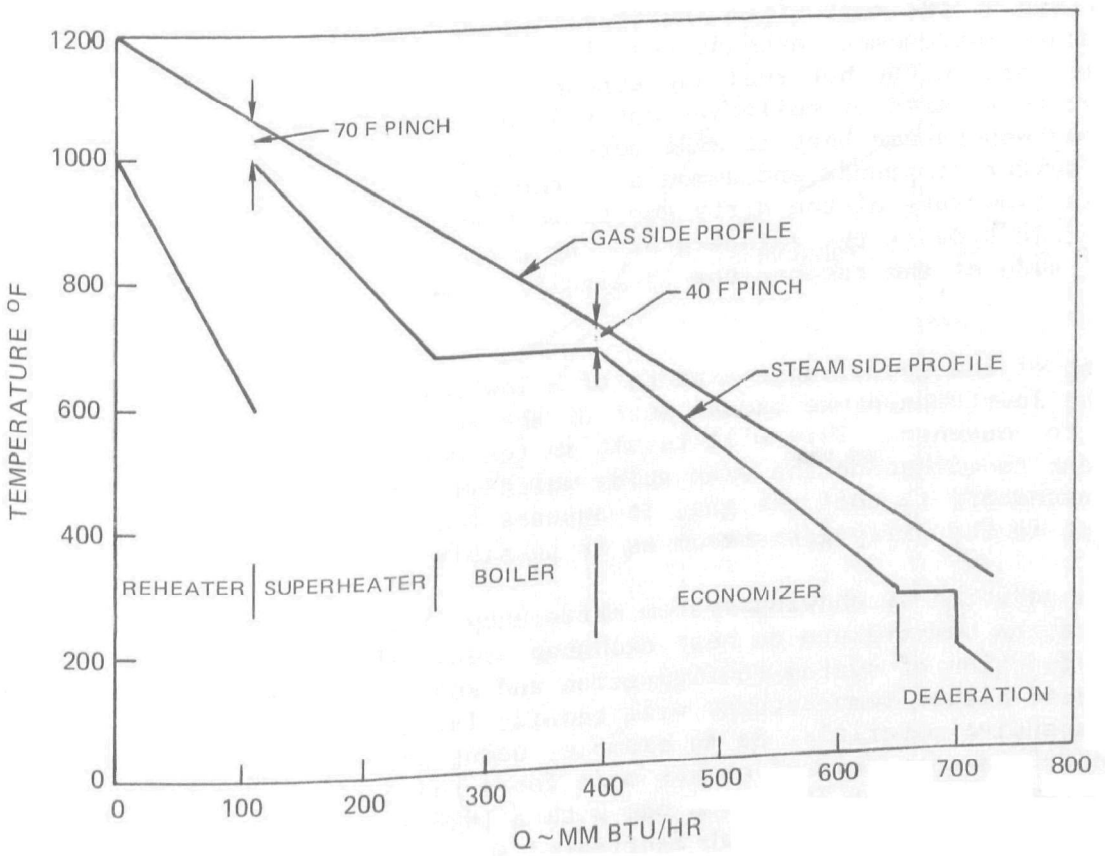


78–02–177–1

complexity; however, further iteration of the design was judged unwarranted as it would not materially change the study results. All heat recovery systems were able to be designed with a minimum superheater pinch of 70 F and boiler pinch of 40 F.

An important factor that does not appear in Equation 8-2 for combined-cycle efficiency is the effect of fuel gas temperature. The sensible heat associated with the fuel gas can be converted at full combined-cycle efficiency if the gas were reheated after cleanup and prior to being burned. The alternative to reheating would be to use that same heat in the steam cycle. Efficiency of the steam cycle is significantly lower ($\eta_{stm}/\eta_{cc} \sim 0.6$) than the overall combined-cycle efficiency.

The effect of reheating the clean fuel gas by heat exchange with the hot raw gas in a BCR system with Selexol cleanup is shown in Figure 8-2. As clean fuel temperature to the burner is increased, overall plant efficiency is improved at the cost of an increase in heat transfer surface area. The performance improvement depends heavily on the temperature level below which sensible heat in the hot fuel gas stream is not recovered (i.e., minimum temperature at exit of boiler or hot side of fuel regenerator). Recovery of this low-temperature heat is made more difficult by the presence of water vapor, sulfur compounds and ammonia in the dirty gas. These substances cause the mass flow rate of the dirty gas to be higher than that for the clean gas on the cold side of the regenerator. As a result, the temperature drop on the hot side of the regenerator is significantly less than on the cold side.

One of the undesirable aspects of a low-temperature cleanup system is that the low-temperature causes most of the water vapor in the dirty gas stream to condense. This will result in the need for costly heat exchange equipment to withstand the weak acids which will be present. However, since it is necessary to cool the gas, it appears desireable to utilize as much of the heat in the dirty gas stream as is possible to improve system performance.

In addition to showing system efficiency, Figure 8-2 shows the effect of regeneration temperature on heat exchange area. While the relationship is also a function of system configuration and subject to further optimization, in general higher temperatures will require larger exchangers made out of more expensive materials. As an example, using the area requirements of Figure 8-2, a cost comparison was made for a regenerator having a cold-side outlet temperature of 750 F and one with a 1000 F outlet temperature. The results in Table 8-1 show that fabricated equipment costs were estimated to be $\$17.50/ft^2$ for the low-temperature unit and $\$27.50/ft^2$ for the 1000 F unit. In the high-temperature case, 18-8 stainless steel and chrome alloy steel are employed for the tube and shell materials. While low alloy carbon steel can be used for the shell in the low-temperature case, stainless steel would still be required for the tube service due to the $H_2$-$H_2S$ environment at the operating temperature.

# EFFECT OF FUEL TEMPERATURE

BCR/SELOXOL SYSTEM

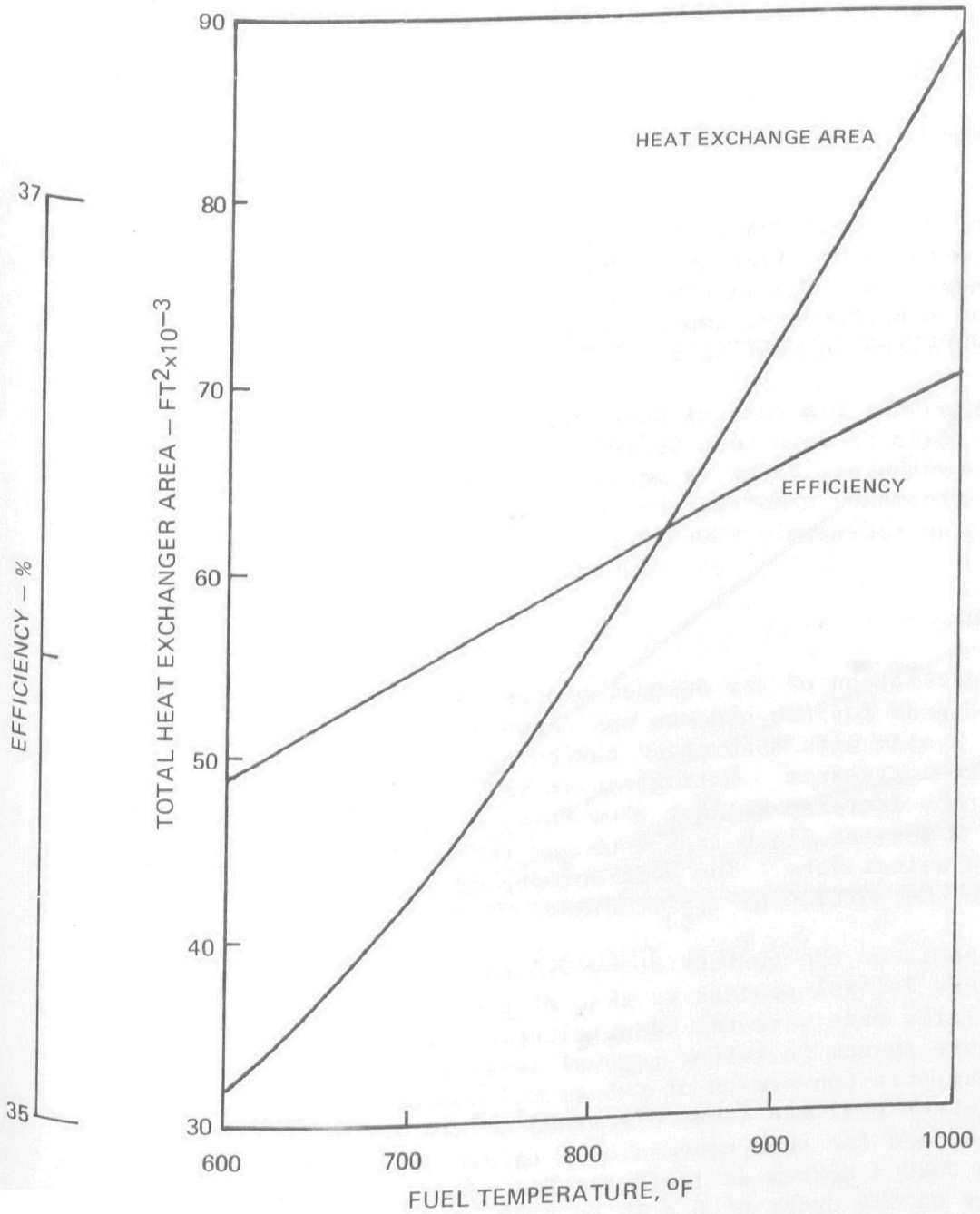


R04–35–1

TABLE 8-1

BCR-SELEXOL FUEL GAS REGENERATOR COSTS

| | | |
|---|---|---|
| Fuel Supply Temp - F | 1000 | 750 |
| Required Area - $ft^2$ | 88,500 | 48,500 |
| Exchanger Cost - $ | $3.04 \times 10^6$ | $1.06 \times 10^6$ |
| Total D&E Cost - $ | $5.5 \times 10^6$ | $1.9 \times 10^6$ |
| Cost with interest and escalation - $ | $7 \times 10^6$ | $2.5 \times 10^6$ |

The resultant delivered and erected cost differential is still quite substantial due to the significantly larger area required for the high-temperature regeneration. The incremental capital investment is approximately $4.5/kW for a performance improvement of approximately 1.5%. This is equivalent to a decrease in heat rate of more than 120 Btu/kWhr.

Figure 8-3 presents the capital cost equivalent of heat rate improvements. As coal costs increase to more than $1/$10^6$ Btu, an increment in capital investment of approximately $5/kW is warranted. In the current study, a somewhat lower performance exchanger has been assumed, with the cold fuel gas being reheated to approximately 900-950 F.

## SELEXOL OPERATION

A general description of the Selexol process was given in Section 6. The basic flow diagram for the process was shown in Figure 6-7. It is a physical solvent system with absorption taking place at high pressure and stripping at ambient pressure. Refrigeration may be added to enhance solvent capacity and thereby decrease solvent flow rate, steam requirements and equipment size. A solvent flash tank with gas recycle compressor may be needed to improve selectivity. The desirability of this additional equipment is dependent upon the particular application.

One of the goals of the current study was to compare operation of the ambient-temperature Selexol process to that of the refrigerated process. Other goals initially made were the identification of the sensitivity of the ambient-temperature system to sulfur removal level and a reassessment of the advantages of catalytic conversion of COS to $H_2S$ upstream of the Selexol absorber. The latter goal was later discarded mainly on the basis of a lack of a well defined need for such conversion. Latest estimates of COS level in the raw gas show that a system designed for $H_2S$ removal only can still produce emissions on the order of 0.4 lb $SO_2/10^6$ Btu, well below current power plant standards. Nonetheless, technical problems are associated with CDS conversion because it is catalyzed and operates at approximately 600 to 700 F.

## CAPITAL EQUIVALENT OF HEAT RATE IMPROVEMENT

LOAD FACTOR = 0.7
ANNUAL CAPITAL CHARGE = 17%

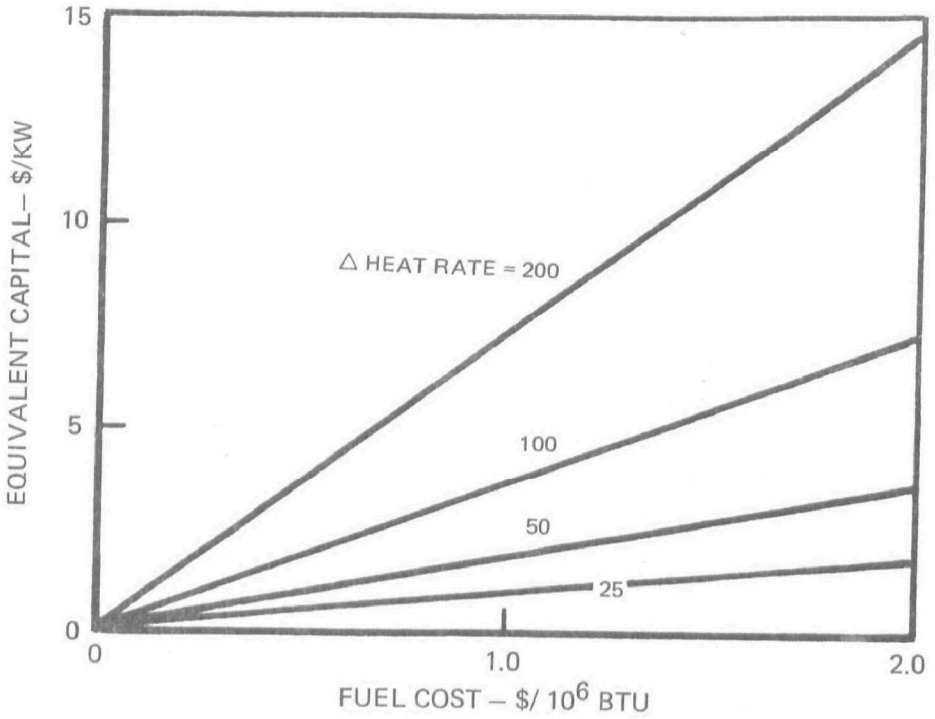

At that point in the process there is still a significant amount of particulate matter in the stream. The problem of plugging the catalyst bed possibly could be solved by the use of a fluid bed. However, applicable experience with the required type of catalyst in this service is not available.

Refrigerated Operation

Initial Selexol sizing studies (Reference 8-6) had been based on refrigerated operation and required two basic designs, the choice of which depended upon the feed gas composition. These compositions are typified by a BuMines-type feed that has little COS and a BCR-type feed having a high level of COS. To achieve a level of 100 ppm sulfur in the clean gas requires a design based on $H_2S$ removal in the case of the BuMines-type feed and one based on COS removal for the BCR-type feed. The feed, product, and Claus feed gas compositions are presented in Table 8-2.

For the $H_2S$-based design, solvent flow rate is adjusted to remove the major portion of the $H_2S$ and is therefore capable of removing only some 30 percent of the COS. In the COS-based design, solvent flow rate is increased to remove most of the COS as well as the $H_2S$. Because of the relatively low solubility of COS in the solvent, a system sized for COS removal must have a proportionately higher solvent flow rate and utility consumption will increase accordingly. Moreover, the solubility of COS is only about twice that of $CO_2$. Simply increasing solvent flow rate would result in removal of a significant amount of the $CO_2$ from the fuel gas, thereby lowering its mass flow and decreasing the $H_2S$ fraction in the Claus gas. To avoid this, the flash tank and recycle compressor shown in Figure 6-7 are included. These improve selectivity to a point where only 30 percent of the $CO_2$ is removed while virtually all the COS is absorbed.

A comparison of the utilities and costs associated with the two designs is given in Table 8-3. While not shown in Table 8-3, the approximate cost and utilities were estimated (Reference 8-1) for the $H_2S$-based design should the required sulfur removal level be relaxed to allow 1000 ppm sulfur in the clean gas. Solvent flow rate and corresponding utilities and cost are reduced by only 12 percent over the 100 ppm design. Thus, for refrigerated operation, the sensitivity to sulfur removal level appears to be quite low, at least between 100 and 1000 ppm total sulfur (actually 32 ppm and 900 ppm $H_2S$). Additional studies showed that for refrigerated operation, solvent flow rate and associated utilities and cost were quite insensitive to the level of $H_2S$ in the feed within the limits studied. That is, the controlling factor in the design is that area of the absorber where the lowest sulfur levels are achieved. Thus, the Selexol system utilities and cost are largely a function of only the molar flow rate, the total pressure and, of course, the type of sulfur compound that must be removed.

Ambient Temperature Operation

Selexol designs using an ambient temperature (100 F) absorber were developed (Reference 8-2) for the same feed compositions as previously described for the regrigerated systems. Mol balances for the resulting

TABLE 8-2

BASIC SELEXOL DESIGNS

Refrigerated Operation
Removal to 100 ppm Sulfur

BuMines Type Feed ($H_2S$ Based Design)
MOL BALANCE MOLS/HR.

| | Feed | Product | Claus Gas |
|---|---|---|---|
| $N_2$ | 57,792.7 | 57,764.5 | 128.2 |
| CO | 26,616.0 | 26,527.6 | 88.4 |
| $CO_2$ | 6,717.9 | 5,647.1 | 1,070.8 |
| $H_2$ | 17,794.3 | 17,767.3 | 27.0 |
| $CH_4$ | 3,486.8 | 3,455.6 | 31.2 |
| $H_2S$ | 639.2 | 3.6 (32ppm) | 635.6 (31%) |
| COS | 11.6 | 7.6 (68ppm) | 4.0 |
| $NH_3$ | 93.0 | 30.5 | 62.5 |
| Total | 113,251.5 | 111,203.8 | 2,047.7 |

BCR Type Feed (COS Based Design)

| | Feed | Product | Claus Gas |
|---|---|---|---|
| $N_2$ | 65,678 | 65,676 | 2 |
| CO | 26,217 | 26,215 | 2 |
| $CO_2$ | 11,663 | 8,015 | 3,648 |
| $H_2$ | 18,369 | 18,369 | --- |
| $CH_4$ | 5,202 | 5,198 | 4 |
| $H_2S$ | 616.6 | 1.2 (10ppm) | 615.4 (14%) |
| COS | 141.3 | 10.8 (90ppm) | 130.5 |
| $NH_3$ | 64.2 | 1.5 | 62.7 |
| Total | 127,951.1 | 123,486.5 | 4,464.6 |

TABLE 8-3

SELEXOL UTILITIES AND COST SUMMARY
REFRIGERATED OPERATION

| | Bu Mines Feed | BCR Feed |
|---|---|---|
| Total sulfur in product - ppm | 100 | 100 |
| Controlling Species | $H_2S$ | COS |
| Steam (50 psi) lb/hv | 105,000 | 305,000 |
| Net Power - bhp | 21,000 | 47,000 |
| Net Power - kW | 17,400 | 38,950 |
| Capital Cost - $\$10^6$ | 21.3 | 49.2 |

systems are presented in Table 8-4. The table also gives the performance estimates for a BuMines-type feed with removal down to 500 ppm and a modified BCR-oxygen-blown feed with removal down to 60 ppm total sulfur.

Of interest is the degree of COS removal achieved at the various overall removal levels. Comparing the two BuMines cases, at 100 ppm total sulfur 46 percent of the COS is removed while at 500 ppm sulfur only 35 percent of the COS is removed. This indicates that solvent flow rate was significantly increased and that the ambient temperature design is quite sensitive to removal to levels of less than 500 ppm in the product gas.

The sensitivity of the ambient-temperature systems to sulfur removal level is shown in Table 8-5 which gives a summary of utilities and costs for each of the four designs. Comparing the two BuMines cases, decreases of 42 percent in steam consumption, 22 percent in power and 23 percent in cost are noted as the sulfur removal requirements are relaxed from 100 to 500 ppm. The COS-based design requires a flash tank and recycle compressor in addition to increased solvent flow to achieve an 18 percent $H_2S$ level in the Claus feed gas.

## Selection of Operating Temperature

It had been anticipated that the change to ambient temperature operation of the Selexol absorber would prove to be desirable both from a performance and cost standpoint. However, a review of the results shows that this is apparently not true. Tables 8-6 and 8-7 present a summary of the effect of temperature change for a BuMines-type feed where $H_2S$ removal determines the design and a BCR-type feed where COS is the controlling species. In general, the refrigerated system requires less steam, more power, and is less costly than its ambient-temperature counterpart. The BuMines design is of particular interest

## MOL BALANCE FOR AMBIENT TEMPERATURE SELEXOL DESIGN

### Bu Mines Type Feed
100 ppm Sulfur Out

| | Feed | Product | Claus Gas |
|---|---|---|---|
| $N_2$ | 57,892.7 | 57,603.2 | 289.5 |
| CO | 26,616.0 | 26,417.3 | 198.7 |
| $CO_2$ | 6,717.9 | 5,318.1 | 1,399.8 |
| $H_2$ | 17,794.3 | 17,732.6 | 61.7 |
| $CH_4$ | 3,486.8 | 3,422.4 | 64.4 |
| $H_2S$ | 639.2 | 3.9 (35ppm) | 63.3 (22%) |
| COS | 11.6 | 6.3 (57ppm) | 5.3 |
| $NH_3$ | 93.0 | 12.6 | 80.4 |
| $H_2O$ | 239.4 | 139.5 | 99.9 |
| TOTAL | 113,490.9 | 110,655.9 | 2,835.0 |

### BCR Type Feed
100 ppm Sulfur Out

| | Feed | Product | Claus Gas |
|---|---|---|---|
| $N_2$ | 65,678 | 65,671 | 7 |
| CO | 26,217 | 26,211 | 6 |
| $CO_2$ | 11,663 | 9,300 | 2363 |
| $H_2$ | 18,369 | 18,368 | 1 |
| $CH_4$ | 5,202 | 5,194 | 4 |
| $H_2S$ | 616.2 | 1.2 (10ppm) | 615.4 (18%) |
| COS | 141.3 | 11.2 (90ppm) | 130.1 |
| $NH_3$ | 64.2 | --- | 1.5 |
| $H_2O$ | 283 | 159 | 306 |
| | 128,234.1 | 124,915.4 | 3,434.0 |

### Bu Mines Type Feed
500 ppm Sulfur Out

| | Feed | Product | Claus Gas |
|---|---|---|---|
| $N_2$ | 57,892.7 | 57,666.5 | 226.2 |
| CO | 26,616.0 | 26,460.8 | 155.2 |
| $CO_2$ | 6,717.9 | 5,624.3 | 1,093.6 |
| $H_2$ | 17,794.3 | 17,746.1 | 48.2 |
| $CH_4$ | 3,486.8 | 3,436.5 | 50.3 |
| $H_2S$ | 639.2 | 46.6 (419ppm) | 592.6 (25%) |
| COS | 11.6 | 7.5 (67ppm) | 4.1 |
| $NH_3$ | 93.0 | 30.2 | 62.8 |
| $H_2O$ | 239.4 | 135.3 | 104.1 |
| TOTAL | 113,490.9 | 111,153.8 | 2,337.1 |

### BCR-Oxygen Blown Feed
60 ppm Sulfur Out

| | Feed | Product | Claus Gas |
|---|---|---|---|
| $N_2$ | 381.6 | 379.5 | 2.1 |
| CO | 30,018.9 | 29,766.9 | 252.0 |
| $CO_2$ | 10,630.5 | 8,113.2 | 2,517.3 |
| $H_2$ | 25,070.7 | 24,974.1 | 96.6 |
| $CH_4$ | 5,130.0 | 5,020.8 | 109.2 |
| $H_2S$ | 954.0 | 0.7 (10ppm) | 953.4 (22%) |
| COS | 7.2 | 3.6 (53ppm) | 3.6 |
| $NH_3$ | --- | --- | --- |
| $H_2O$ | 257.4 | 118.2 | 384.3 |
| | 72,450.3 | 68,376.9 | 4,318.5 |

TABLE 8-5

SELEXOL COST AND UTILITIES SUMMARY

| | Ambient Temperature Absorber | | | |
|---|---|---|---|---|
| | Bu Mines Feed | BCR Feed | Bu Mines Feed | $O_2$-Blown BCR Feed |
| Total S in effluent - ppm | 92 | 100 | 486 | 63 |
| Controlling Species | $H_2S$ | COS | $H_2S$ | $H_2S$ |
| Steam (50 psi) - lb/hr | 252,000 | 760,000 | 147,000 | 82,200 |
| Net Power - bhp | 5,154 | 30,815 | 4,029 | 1,230 |
| Net Power - kW | 4,270 | 25,532 | 3,338 | 1,019 |
| Capital Cost - $\$10^6$ | 34.6 | 95.8 | 26.6 | 27.1 |

TABLE 8-6

REFRIGERATED VS. AMBIENT-TEMPERATURE SELEXOL OPERATION

BuMines Type Feed ($H_2S$ Controls)
100 ppm Sulfur in Product

| | Ambient-Temperature | Refrigerated | Δ |
|---|---|---|---|
| Steam - lb/hr | 252,000 | 106,200 | 146,000 |
| Net Power - kW | 4,270 | 17,400 | - 13,000 |
| Cost - $\$10^6$ | 34.6 | 21.3 | 13.3 |

TABLE 8-7

REFRIGERATED VS. AMBIENT-TEMPERATURE SELEXOL OPERATION

BCR Type Feed (COS Controls)
100 ppm Sulfur In Product

| | Ambient-Temperature | Refrigerated | Δ |
|---|---|---|---|
| Steam - lb/hr | 760,000 | 305,000 | 455,000 |
| Net Power - kW | 25,530 | 38,940 | - 13,400 |
| Cost - $\$10^6$ | 95.8 | 49.2 | 46.6 |

in this study since that will be the basis for the integrated system designs described in Section 11. For fuel gas from the BuMines-type gasifier, refrigerated operation shows less advantage than it does in the case of the BCR-type gasifier.

The effects of changing from refrigerated to ambient-temperature operation are summarized in Table 8-8. Low-pressure steam use is debited at the rate of 20 lb/kWh while the incremental costs of the turbogenerator and condenser were $500/kW for the low-pressure steam (exclusive of boiler). The net effect of ambient-temperature operation is a $10/kW increase in cost and a 50 Btu/kWh decrease in heat rate. It can be seen from Figure 8-3 that this would pay off only when coal reaches a cost of approximately $6 per $10^6$ Btu. Thus, while the overall effect of a change to ambient-temperature operation would not be very significant, it is definitely not economical and would result in operation at conditions where the Selexol design is quite sensitive to sulfur removal level. Under those conditions, any unexpected factors that might harm Selexol performance would have a much greater effect on the ambient-temperature system. Therefore, refrigerated operation was chosen as the design basis for this study.

Effect of Sulfur Removal Level

Based on the data presented in Tables 4-3 through 4-5, it is clear that the major factor determining Selexol system utility consumption and cost is whether the system design is based on $H_2S$ or COS removal. For the $H_2S$-based design with refrigerated operation, only a 12% decrease in solvent flow rate (and cost) was noted when the product gas was allowed to increase from 100 to 1000 ppm total sulfur (32 to 900 ppm $H_2S$). Thus, it appears that at refrigerated operating conditions, there is only a slight penalty involved with removal to low $H_2S$ levels. However, in the case of ambient operation with the same feed composition, a 30 percent increase in cost and 60 percent increase in steam consumption is noted as removal level is reduced from 500 to 100 ppm total sulfur (420 to 35 ppm $H_2S$). Thus, it appears that at ambient temperature the system is somewhat more sensitive to the degree of $H_2S$ removal.

STEAM TO COAL FEED RATIO

Earlier studies (e.g., Reference 8-3) have shown the benefits to be achieved by lower steam/carbon feed ratios. With coal as the feed, this is usually referred to as the steam/coal ratio. For combined-cycle power generation, methane and hydrogen yields are not important so long as the resultant gas will permit stable combustion. This allows a great degree of latitude in operating conditions and generally would permit gasification with no hydrogen other than that contained in the coal.

To test the effect of steam/carbon feed ratios, it is of interest to review the somewhat easier case of an oil gasifier using the equilibrium calculation procedure for the gasifier. Typical ranges for steam/oil ratios would be 0.0 to 0.4 (lb/lb) while the air/oil ratios would be 6.0 to 6.5. The minimum air/oil ratio that would provide 1 atom of oxygen per atom of

TABLE 8-8

SUMMARY OF PERFORMANCE AND COST
REFRIGERATED VS. AMBIENT TEMPERATURE SELEXOL OPERATION

Performance Effect of Change from Refrigerated to Ambient Temperature

| | Change | Performance Effect |
|---|---|---|
| Stream Consumption | +146,000 lb/hr | - 7,300 kW |
| Power Consumption | - 13,000 kW | +13,000 kW |
| Net Effect on Output | | + 5,700 kW |
| Net Effect on Heat Rate | | - 45 Btu/kWh |

Cost Effect of Change from Refrigerated To Ambient Temperature

| | |
|---|---|
| Change in Selexol Cost | + $13.3 x $10^6$ |
| Change in LP Steam Turbine and Condensor | - 3.6 x $10^6$ |
| Net Capital Cost Change | + 9.7 x $10^6$ |
| Net Change in Cost Per RW | + 9.6/kW |

carbon is 5.0. However, to achieve a reasonable reactor size, it is necessary to increase this to 6.0 thereby providing sufficient air to increase combustion temperature and, thereby, reaction rates.

Table 8-9 shows that change in volumetric heating value of the fuel gas is very small over the range of operational steam/oil ratios. When viewed in terms of chemical heating value per pound of oil consumed, the output of the gasifier is constant over the range of steam/oil ratios considered. Also shown in Table 8-9, the effects of steam addition on composition are an increase in hydrogen and carbon dioxide production coupled with a decrease in CO. Stoichiometrically, each additional molecule of hydrogen in steam brings with it an oxygen atom which will react with one CO molecule to form $CO_2$. Each added $H_2$ molecule means one less CO molecule. Moreover, the higher heating value of $H_2$ and CO are almost the same so their effects on gas heating value cancel. Further examination of the product gas shows that about 25 percent of the input steam shows up as hydrogen and the remainder leaves as water vapor in the product gas. Thus, the net effect of steam addition on the product gas is minimal and the heat needed to raise the steam is mostly lost since the latent heat cannot practically be recovered from the water vapor in the fuel gas.

To maintain reactor temperature, air/oil ratio would have to be increased, thereby reducing chemical heating value. Even if it were possible to keep the water vapor in the fuel gas stream (as with hot cleanup) it would be used at a relatively low efficiency since gas turbine expansion ratios are significantly less than those of steam turbines.

In the case of low-temperature cleanup systems, virtually all water vapor is condensed during the gas cooling process. One method of recovering some of this heat is by using the latent heat to heat water from a fuel gas resaturator (Figure 8-4). This increases the mass of the fuel gas stream. The effect on performance is illustrated by studies of resaturation of the clean gas in the BuMines/Selexol system.

The potential performance improvement to be achieved with the addition of water vapor to the fuel gas was estimated by varying the cleanup system output composition. The results are shown in Figure 8-5. In determining performance, no penalty was associated with the addition of the vapor so the trends shown in that curve are the maximum that can be achieved. In practice, heat must be provided for humidification and could detract from performance. In terms of water used per megawatt of power, the incremental power produced requires about 14,000 lb/hr for each additional megawatt of electrical power. For this system a 300 F dew point will produce a water vapor mol fraction of .248. This was taken as a practical maximum since further resaturation would require the use of heat at temperatures over 300 F while producing power at a relatively high heat rate of 15000 Btu/kWh.

AIR-BLOWN BCR GASIFIERS

The earlier phases of this study had used available data for the BCR-type gasifier that had a high steam feed rate and was more suited to synthesis gas

TABLE 8-9

EFFECT OF STEAM ADDITION ON FUEL GAS CHEMICAL HEATING VALUE

Fuel - Venezuelan Residual Oil

Air/Oil Ratio = 6.0

| | Steam/Oil Ratio | | |
|---|---|---|---|
| Fuel Gas Characteristics | 0. | 0.2 | 0.4 |
| Mole Fraction $H_2$ | .1469 | .1514 | .1548 |
| Mole Fraction $H_2O$ | .0335 | .0612 | .0858 |
| Mole Fraction CO | .2335 | .215 | .1985 |
| Mole Fraction $CO_2$ | .0154 | .0248 | .0328 |
| $H_2$ SCF/lb Oil | 16.66 | 17.83 | 18.91 |
| CO SCF/lb Oil | 26.49 | 25.32 | 24.24 |
| HHV Btu/SCF | 122.9 | 118.4 | 114.2 |
| Gas Produced SCF/lb Oil | 113.43 | 117.78 | 122.13 |
| Output Gas HHV - Btu/lb Oil | 13940 | 13945 | 13947 |

# BUMINES/SELEXOL SYSTEM WITH FUEL GAS RESATURATION

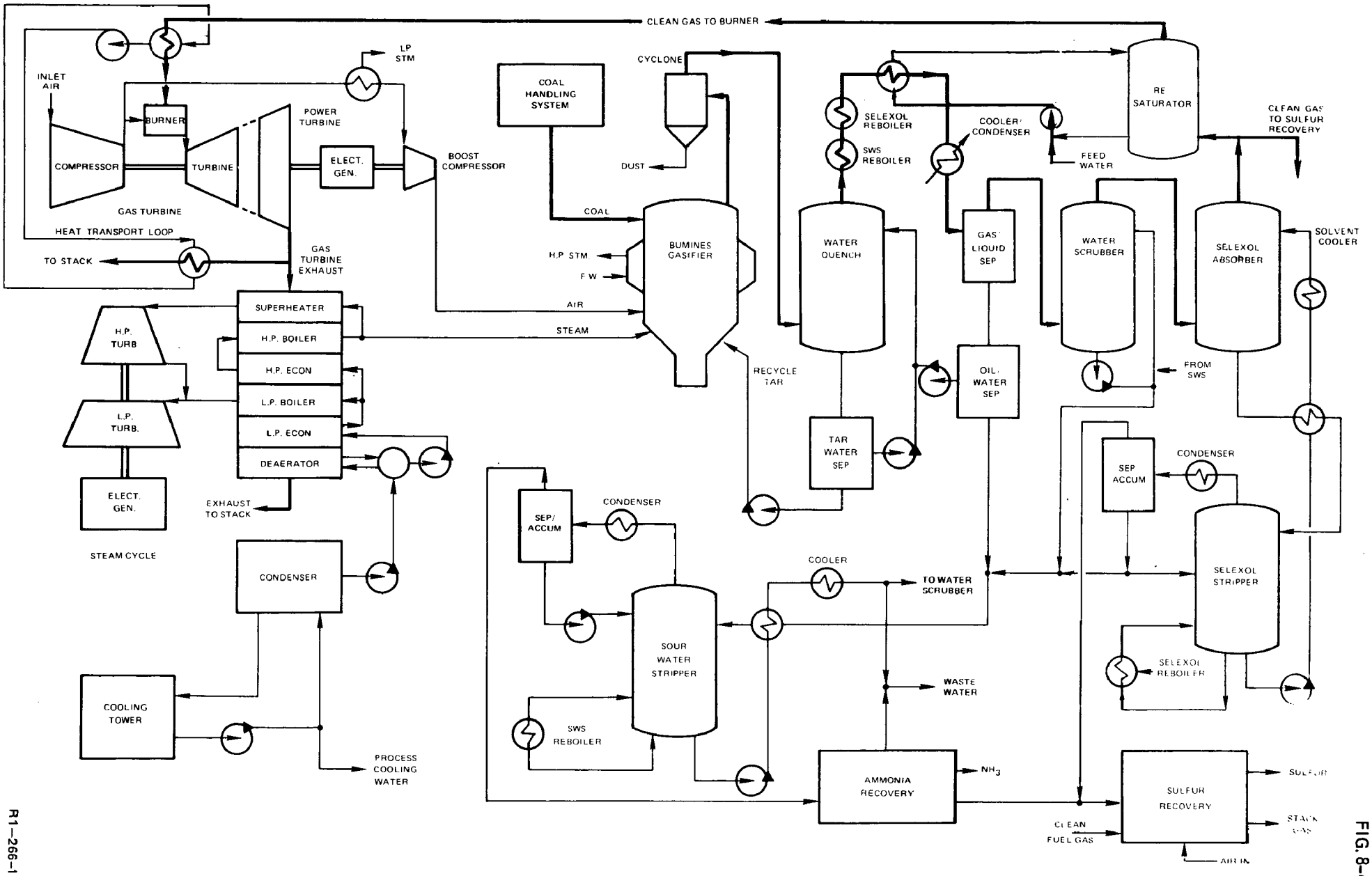


FIG. 8-4

EFFECT OF WATER VAPOR IN FUEL GAS BUMINES–SELEXOL SYSTEM

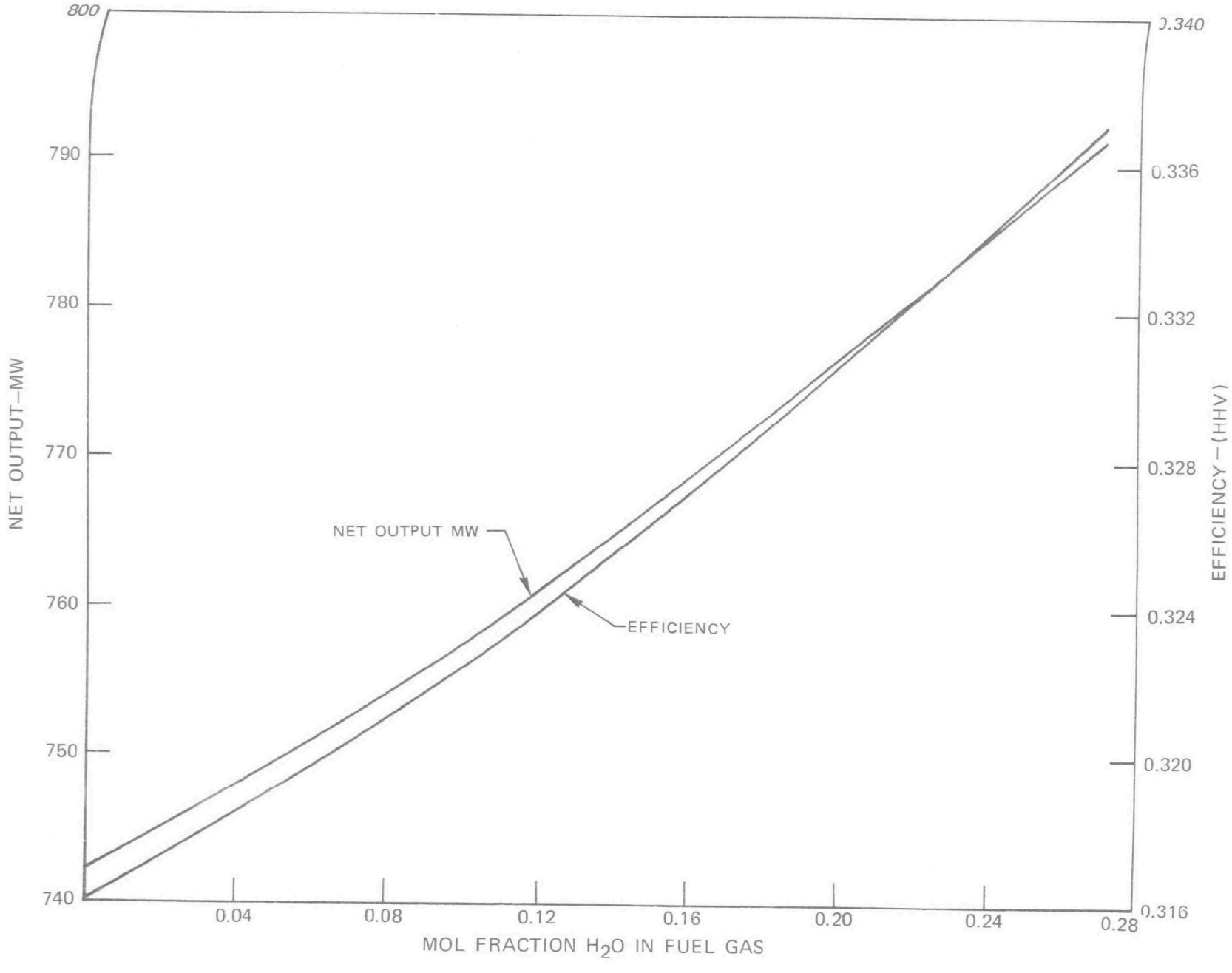


FIG. 8–5



R05–122–3

or methane production. Work subsequently performed under EPRI-sponsorship (Reference 8-4) has resulted in descriptions of gasifier operation at lower steam feed rates that are more suited to combined-cycle power generation. A comparison of the two estimates is given in Table 8-10. The improved cold gas efficiency is a good indication of relative performance but does not account for all of the factors that will affect system efficiency.

A careful inspection of the data in Table 8-10 shows that the remarkable increase in cold gas efficiency of nearly six percentage points is due only in part to the reduced steam feed rate. The reduction in transport gas requirements is also quite significant. Transport gas is compressed to higher than gasifier pressure and must be cooled prior to compression. A considerable amount of heat must be supplied via combustion in the gasifier to increase both transport gas and steam temperatures. Surprisingly, while the absolute hydrogen yield decreased with reduced steam, the mol fraction of hydrogen increased. Thus, there is certainly no reason to expect a combustion problem as a result of the change.

Low Temperature Desulfurization

In terms of sulfur removal, a more desirable ratio of $H_2S$ to COS is evident. While total sulfur molar flow rate remains the same, the higher partial pressure resulting from lower total molar flow rate will mean a corresponding reduction in Selexol system size, cost, and utilities.

The reduced $CO_2$ concentration could permit the use of a nonselective desulfurization process. The effect of substituting a nonselective cleanup process for the Selexol system was evaluated using utilities typical of a hot-potassium system. The effect on overall performance was estimated to be negligible. However, the Selexol process was retained as the baseline system for the study. It gives reasonable performance representative of low-temperature processes and will probably result in cost estimates that are slightly conservative.

High-Temperature Desulfurization

The Conoco half-calcined dolomite absorber is quite sensitive to both temperature and gas composition. Reactions in the absorber closely approach equilibrium (Reference 8-5) and desulfurizer performance can be estimated using data for $H_2S$ and COS reactions with the dolomite. $H_2S$ absorption involves the following reaction:

$$[CaCO_3 \cdot MgO] + H_2S \qquad [CaS \cdot MgO] + H_2O + CO_2 \tag{8-3}$$

for which the equilibrium $H_2S$ concentration in the gas is given by

$$[H_2S] = [H_2O]\,[CO_2]\;P/K \tag{8-4}$$

*COMPARISON OF BCR DATA*

*Coal - Illinois No. 6 - 700, 000 lb/hr.*

| | Air-Blown Gasifier | | | |
|---|---|---|---|---|
| | 1975 EPA Study | | EPRI Data | |
| | Mols/Hr (1) | Mol % | Mols/Hr (1) | Mol % |
| $CH_4$ | 5,188 | 3.65 | 3,775 | 3.37 |
| $H_2$ | 18,319 | 12.88 | 15,315 | 13.68 |
| CO | 26,151 | 18.38 | 32,190 | 28.75 |
| $CO_2$ | 11,751 | 8.26 | 3,396 | 3.03 |
| $H_2S$ | 687 | 0.48 | 751 | 0.67 |
| COS | 142 | 0.10 | 76 | 0.07 |
| $N_2$ | 65,499 | 46.04 | 53,753 | 48.02 |
| $NH_3$ | 573 | 0.4 | 479 | 0.43 |
| $H_2O$ | 13,953 | 9.81 | 2,213 | 1.98 |
| | 142,263 | | 111,948 | |
| HHV-Btu/SCF | 138.0 | | 171.2 | |
| Air/Coal Ratio | 3.09 | | 2.78 | |
| Steam/Coal Ratio | .567 | | .144 | |
| Transport Gas/ Coal Ratio | .426 | | .088 | |
| Cold Gas Eff. (2) | 78.5% | | 83% | |

(1) Includes transport gas

(2) Based on net gas make - excluding transport gas

where [ ] = mol fraction of component

P = total pressure, atm

K = equilibrium constant

From Figure 8-6 and Equation 8-4, it is clear that the degree of $H_2S$ removal increases with temperature for a given gas composition. Also, the degree of removal at a given temperature is inversely proportional to temperature and concentration of the reaction products, $CO_2$ and $H_2O$.

Although no data have been reported for COS adsorption by half-calcined dolomite, high COS removal efficiencies are predicted thermodynamically according to the reaction:

$$[CaCO_3 \cdot MgO] + COS \quad [CaS \cdot MgO] + CO_2 \qquad (8\text{-}5)$$

where the residual COS concentration is

$$[COS] = [CO_2]^2 P/K \qquad (8\text{-}6)$$

The equilibrium constant for this reaction is shown in Figure 8-7. The degree of COS removal like that for $H_2S$ increases with increasing temperature and decreasing $CO_2$ concentration.

From the above, it would appear that reduced steam feed to the gasifier with its associated reduction in $H_2O$ and $CO_2$ in the off-gas should improve desulfurization performance. However, with the low $H_2O$ and $CO_2$ content, a third reaction becomes important, that of decomposition of the acceptor. It imposes a maximum operating temperature for this process depending on the partial pressure of carbon dioxide in the gas phase; i.e., the temperature should not exceed that at which the $CO_2$ partial pressure is equal to the decomposition pressure for $CaCO_3$ via the following endothermic reaction:

$$Ca\ CO_3 \quad CaO + CO_2 \qquad (8\text{-}7)$$

The equilibrium decomposition pressures for calcium carbonate are given in Figure 8-8.

An example of the characteristics of the Conoco absorption process is given in Figure 8-9 using a BCR-type feed having a high water vapor and $CO_2$ composition; the partial pressure of $CO_2$ in the product gas is shown as a solid line for each of two different operating pressures (the variation with temperature is due to the water gas shift reaction). The limiting or minimum partial pressure shown by the dashed line is the equilibrium partial pressure of $CO_2$ above $CaCO_3$. The partial pressure of $CO_2$ must be greater than this to prevent decomposition of the $CaCO_3$ to CaO. The intersection (Point A) indicates that at the absorber operating pressure of 450 psia, the maximum operating temperature could be 1780 F and the residual sulfur would be 325 ppm

FIG. 8-6

## EQUILIBRIUM CONSTANT FOR $H_2S$ ABSORPTION BY HALF – CALCINED DOLOMITE

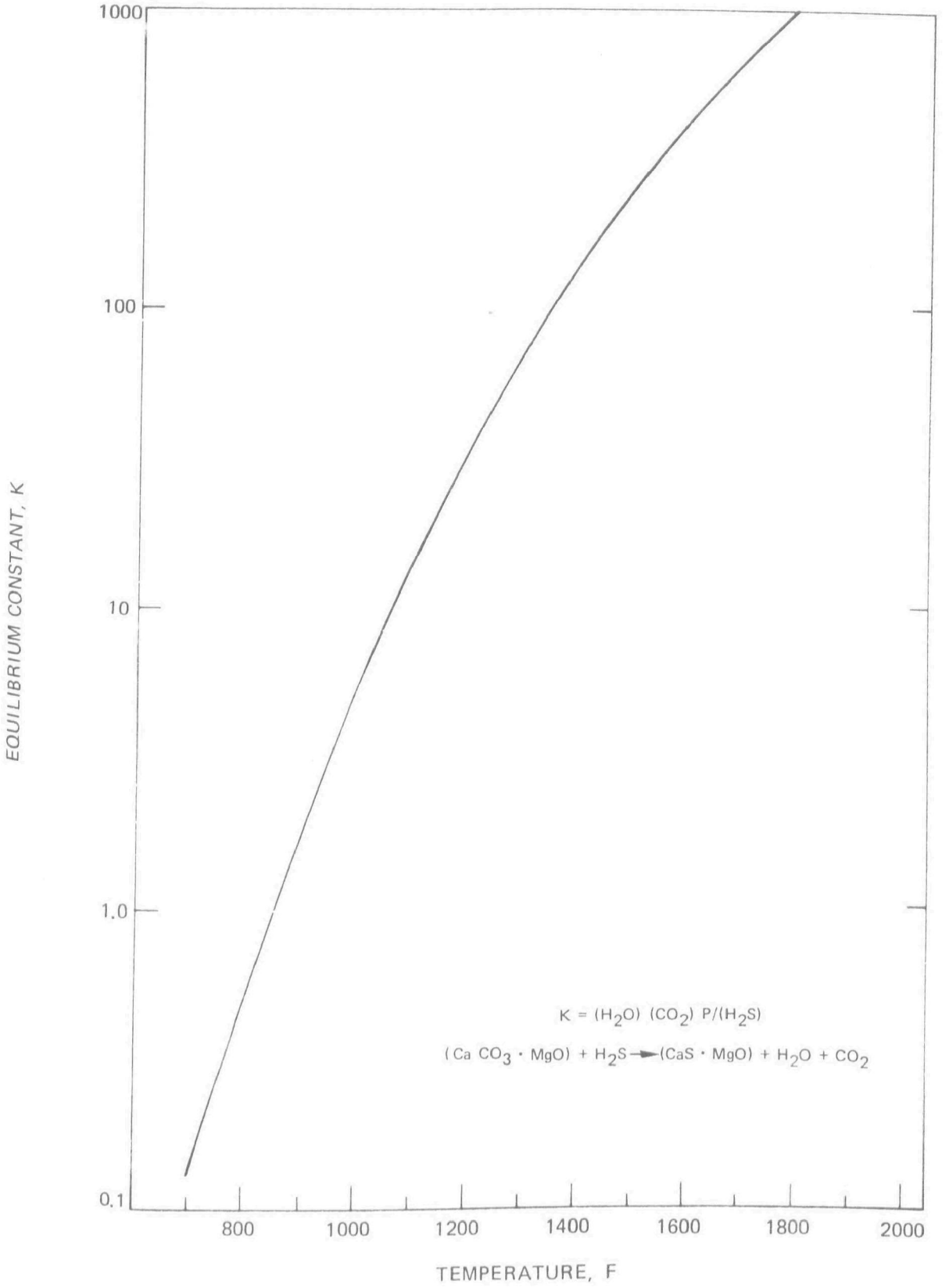

## EQUILIBRIUM CONSTANT FOR COS ABSORPTION BY HALF–CALCINED DOLOMITE

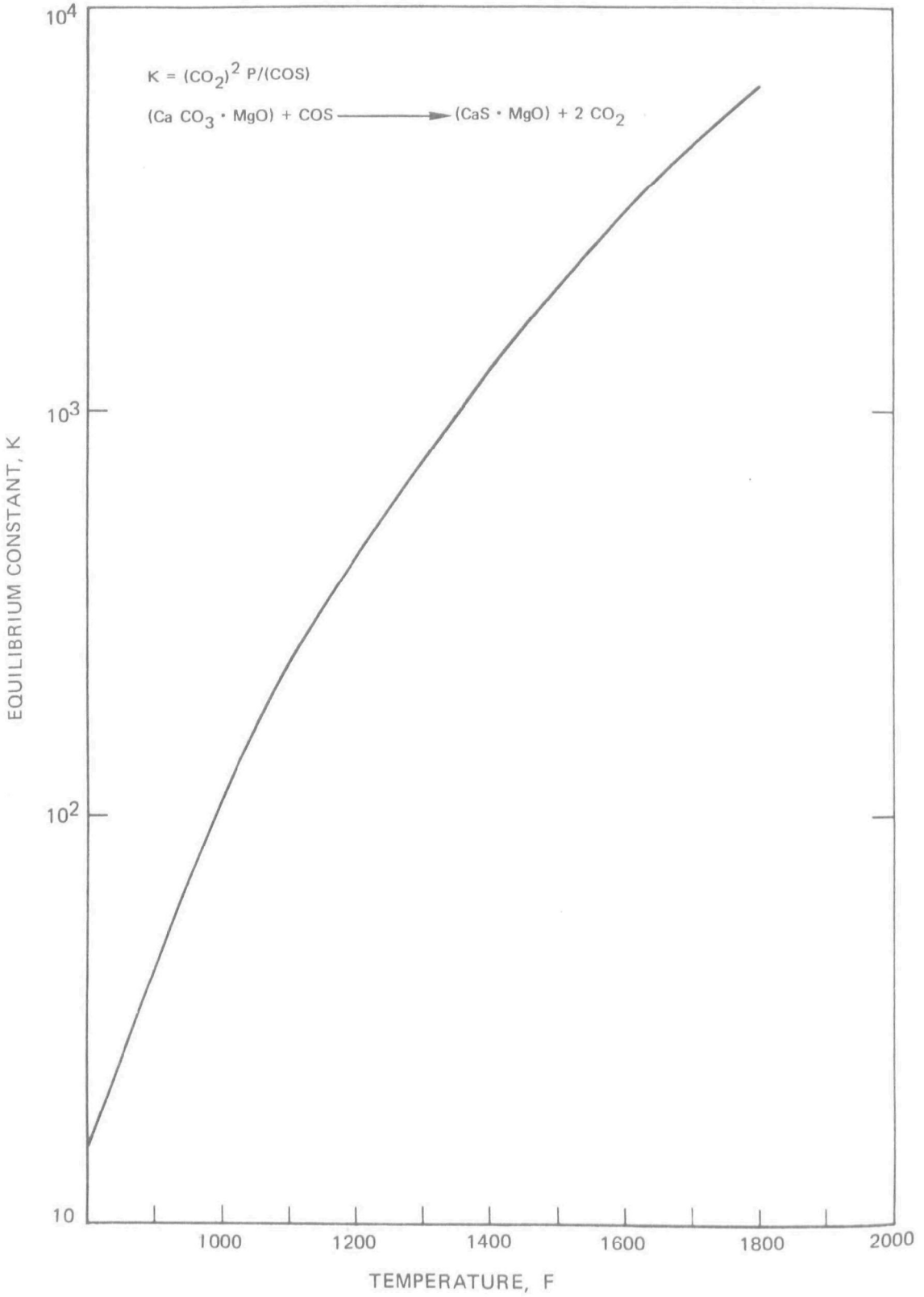

## DISSOCIATION PRESSURE FOR CALCIUM CARBONATE

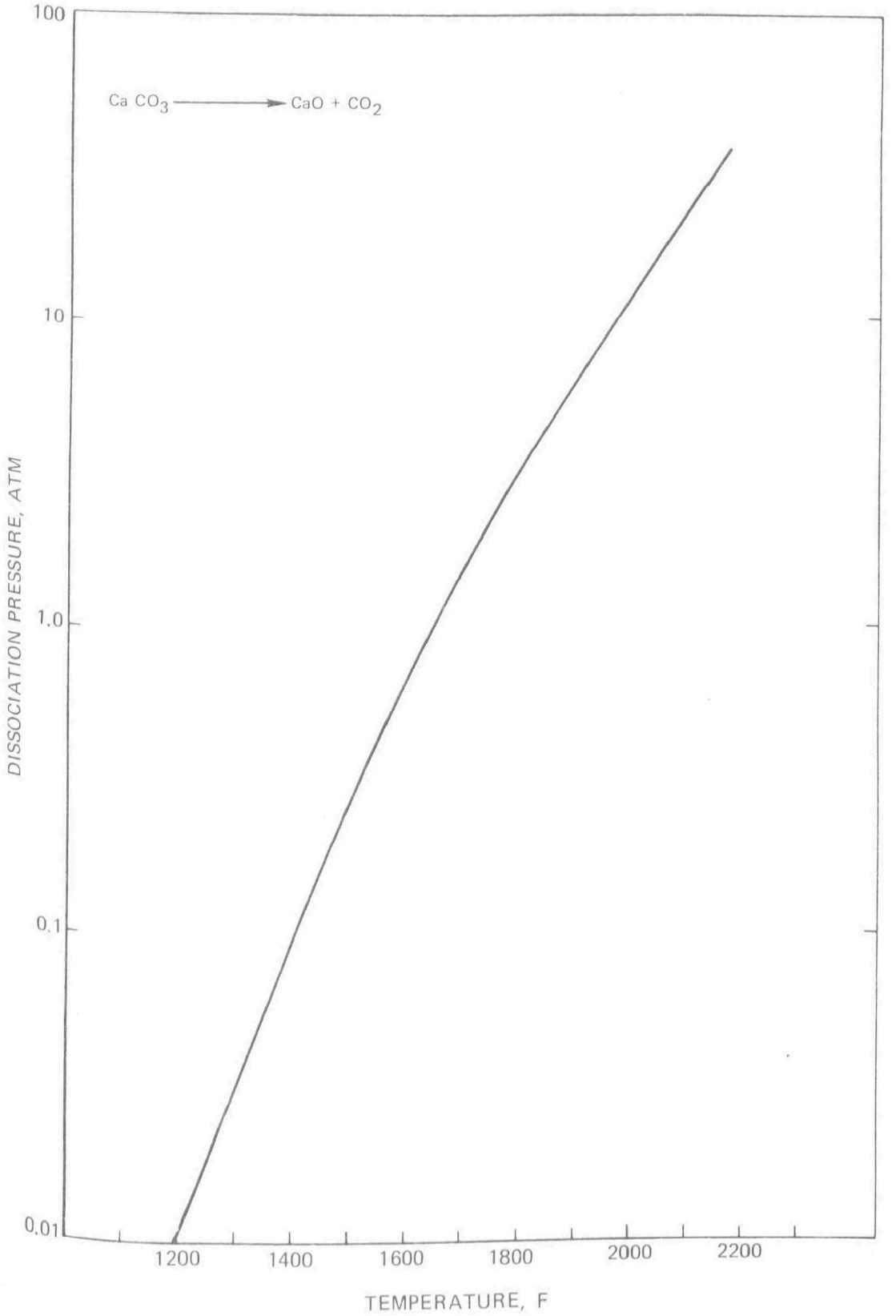


R 1–19- 19

## SULFUR ABSORPTION BY HALF CALCINED DOLOMITE

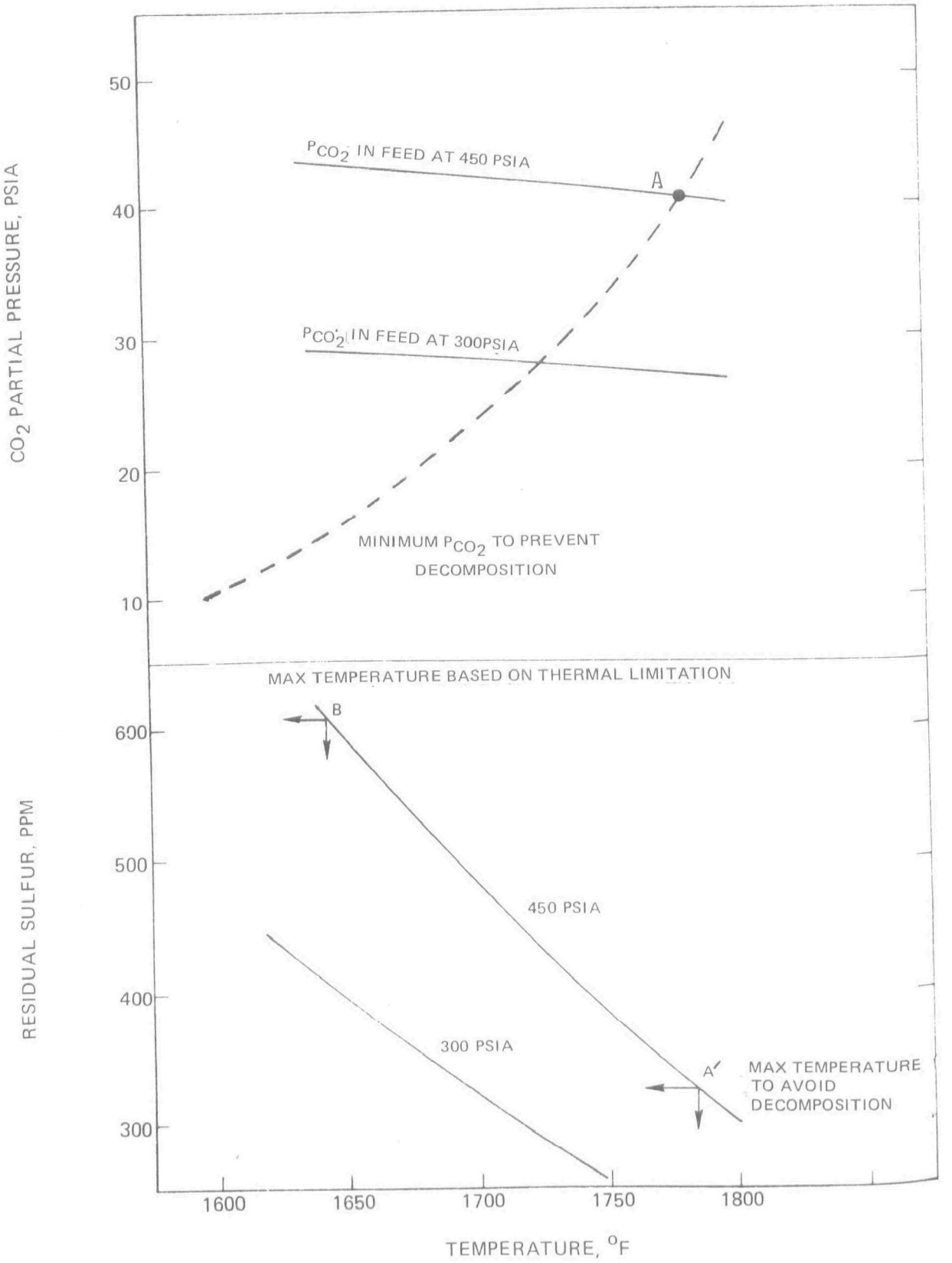

(Point A'). However, the product gas enters the absorber at only 1750 F and heat balance constraints limit the maximum temperature to about 1650 F since the combined chemical reactions are endothermic to the extent of 112 Btu/mol of feed gas. The residual sulfur content at this temperature is around 600 ppm (Point B in Figure 8-9).

In the case of the air-blown BCR gasifier with low steam feed, desulfurizer pressure is 340 psia and partial pressure of carbon dioxide in the feed is only 10 psia. Thus the temperature in the absorber must be limited to 1600 F to avoid decomposition. For that reason, the raw gas which leaves the gasifier at 1700 F must be cooled prior to desulfurization. The lower temperature reduces the equilbrium constants in Equations (8-4) and (8-6), but that reduction is less than 50 percent while $CO_2$ and $H_2O$ concentrations are reduced by a factor of 2.5 and 5.0 respectively. The resultant sulfur in the gas (based on equilibrium) is only 106 ppm as opposed to approximately 600 ppm for the high-steam feed case.

## PARAMETRIC STUDIES OF THE U-GAS/CONOCO SYSTEM

Because of the potential benefits of reduced steam feed rates, the effect on the U-Gas system was investigated. The gasifier equilibrium model developed at UTRC was used to predict the effect of variations in steam feed rates while maintaining a fixed reaction temperature and constant heat leak. Discussions with IGT supported the validity of the study and led to their recommendation of 0.25 lb $H_2O$/lb coal as the minimum practical ratio for the U-Gas process.

For an Illinois No. 6 coal feed, the concentration of $H_2O$ and $CO_2$ in the raw gas as a function of steam/coal ratio to the gasifier is given in Figure 8-10. The effect on sulfur removal is shown in Figure 8-11. A steam/coal feed ratio of 0.1 is limiting from a theoretical standpoint in that the $CO_2$ partial pressure is too low to prevent decomposition of the carbonate. Also, as $CO_2$ concentration is reduced, there is the potential for carbon formation via the Boudouard reaction. A steam/coal ratio of 0.2 coupled with the residual moisture in the coal gives a total $H_2O$/ coal ratio of 0.24. This value was selected as the basis for operation of a U-Gas/Conoco high-temperature desulfurization system. The estimated product gas characteristics and high-temperature desulfurizer performance for this system are given in Table 8-11.

It should be noted that in both the BCR and U-Gas cases, the desulfurizers have been assumed to run at a temperature approximately 100 F lower than that of the Conoco design upon which performance and cost is based. Quantitative evaluation of the effect on approach to equilibrium of that difference was not available. A longer residence time will most likely be required resulting in a larger desulfurization system.

## GASIFIER MODELING

Modeling techniques developed in earlier phases (References 8-3 and 8-6) were used to verify data obtained during this program. In addition to use of

U–GAS GASIFIER EQUILIBRIUM COMPOSITION AT 2010R

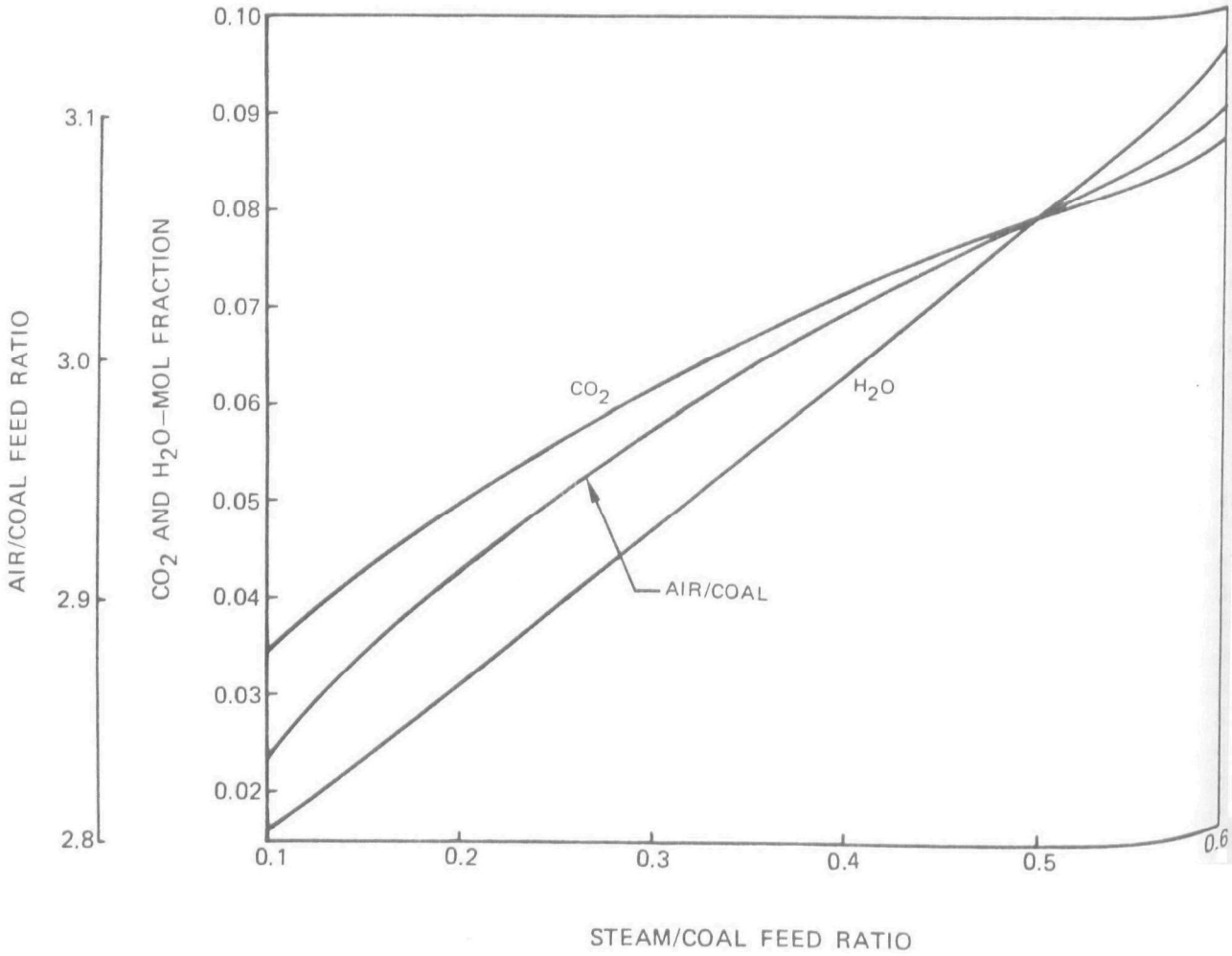

HIGH–TEMPERATURE CLEANUP SYSTEM PERFORMANCE

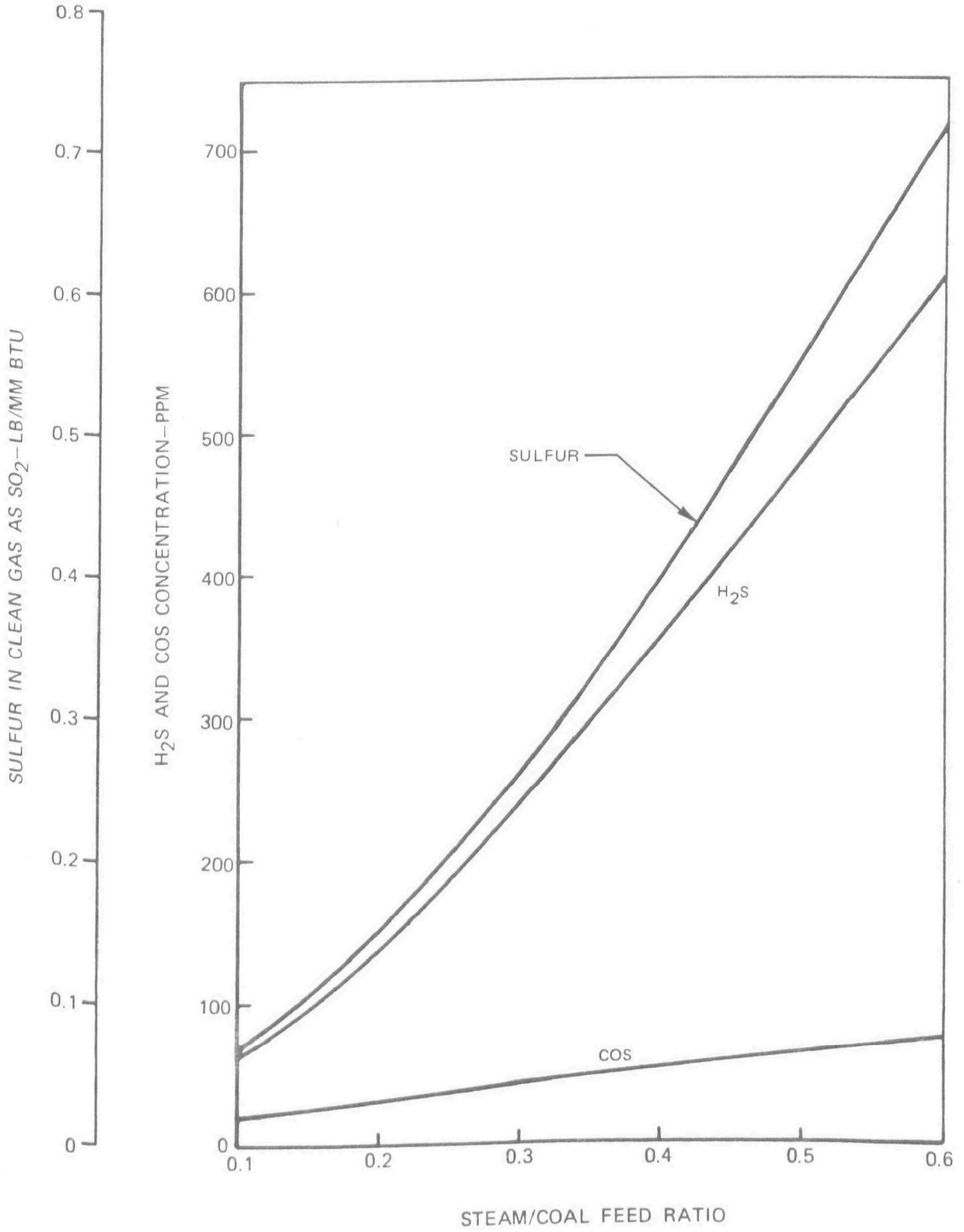


77–09–87–1

TABLE 8-11

COMPARISON OF HIGH VS. LOW STEAM PERFORMANCE

U-Gas Gasification/Conoco Desulfurization
Coal Feed - Illinois #6 - 700,000 lb/hr

| | High Steam Feed | | Low Steam Feed | |
|---|---|---|---|---|
| Comp. | Gasifier Out Mol/Hr | Desulfurizer Out Mol/Hr | Gasifier Out Mol/Hr | Desulfurizer Out Mo/Hr |
| $CH_4$ | 4,002 | 4,002 | 3,724 | 3,724 |
| $H_2$ | 20,335 | 21,498 | 16,926 | 17,003 |
| CO | 23,738 | 22,574 | 29,126 | 29,049 |
| $CO_2$ | 11,178 | 13,071 | 5,832 | 6,732 |
| $H_2S$ | 779 | 90 | 763 | 17 |
| COS | 32 | 12 | 41 | 3 |
| $N_2$ | 57,801 | 57,801 | 55,053 | 55,053 |
| $NH_3$ | 42 | 42 | 31 | 31 |
| $H_2O$ | 14,013 | 13,539 | 3,606 | 4,275 |
| Total | 131,920 | 132,629 | 115,102 | 115,887 |
| HHV-Btu/SCF | 138.8 | 138.1 | 162 | 160.9 |
| Air/Coal Ratio | 3.01 | | 2.86 | |
| Steam/Coal Ratio | 0.557 | | 0.2 | |
| Transport Gas/ Coal Ratio | 0.053 | | 0.053 | |
| Cold Gas Efficiency - % | 80.2 | | 81.5 | |

the equilibrium model in evaluating the effects of steam/coal ratio, it was used to identify the possible pollutant compounds and potential levels that might be expected for each of the gasifiers studied. These are presented in Tables 8-12 and 8-13. While the results given in Tables 8-12 and 8-13 are subject to the limitations of an equilibrium calculation not absolute in character, they are useful to get a feel for the degree of optimism or pessimism about pollution control for the fuel gas from each type of gasifier.

TABLE 8-12

GASIFIER EQUILIBRIUM COMPOSITIONS

| | BCR/Air-Blown | | | | | BCR/$O_2$ - Blown | | | U-Gas | | |
|---|---|---|---|---|---|---|---|---|---|---|---|
| | 1975 Data | | Current Data (Low Steam Feed) | | | | | | | | |
| | Predicted | Adiabatic Equilib. | Predicted | Adiabatic Equilib. | Isothermal Equilib. | Predicted | Adiabatic Equilib. | Isothermal Equilib. | Predicted | Adiabatic Equilib. | Isothermal Equilib. |
| $H_2O$ | .0981 | .0816 | .0198 | .0177 | .0160 | .1440 | .1339 | .1272 | .1062 | .0894 | .0893 |
| CO | .1838 | .1920 | .2875 | .2908 | .2997 | .3533 | .3527 | .3760 | .180 | .1851 | .2058 |
| $H_2$ | .1288 | .1693 | .1368 | .1511 | .1648 | .2950 | .3183 | .3462 | .1541 | .1883 | .2052 |
| $CO_2$ | .0826 | .0804 | .0303 | .0276 | .0214 | .1251 | .1237 | .1012 | .0847 | .0852 | .0698 |
| $N_2$ | .4604 | .4483 | .4802 | .4762 | .4693 | .0045 | .0075 | .0072 | .4382 | .4278 | .4179 |
| $CH_4$ | .0365 | .0222 | .0337 | .0291 | .0215 | .0604 | .0528 | .0315 | .0303 | .0178 | .0058 |
| $NH_3$ | .004 | .00046 | .0043 | .00023 | .00022 | .0064 | .00009 | .00008 | .00032 | .00035 | .00028 |
| COS | .001 | .0002 | .00067 | .00042 | .0004 | .0010 | .00038 | .00036 | .00024 | .00018 | .00018 |
| $H_2S$ | .0048 | .00543 | .0067 | .0069 | .0068 | .0103 | .0107 | .0103 | .0059 | .0058 | .0057 |
| $COS/H_2S$ | .021 | .037 | 0.1 | .061 | .059 | 0.1 | .035 | .035 | .041 | .031 | .031 |
| T-°F | 1750 | 1595 | 1700 | 1636 | 1700 | 1700 | 1619 | 1700 | 1660 | 1533 | 1660 |

TABLE 8-13

MOLTEN SALT GASIFIER EQUILIBRIUM COMPOSITION

| Mole Fractions | Kellogg Data | Equilibrium | Equilibrium |
|---|---|---|---|
| $N_2$ | 0.4969191 | 0.48962 | 0.48957 |
| CO | 0.2768238 | 0.29089 | 0.29085 |
| $H_2$ | 0.1347269 | 0.15312 | 0.15290 |
| $CO_2$ | 0.0301001 | 0.022750 | 0.022810 |
| $H_2O$ | 0.0229448 | 0.018882 | 0.018908 |
| $CH_4$ | 0.0146700 | 0.0068163 | 0.0067769 |
| $Na_2CO_3(\ell)$ | 0.0113919 | 0.011713 | 0.011699 |
| $Na_2S(\ell)$ | 0.0052493 | 0.0056839 | 0.0056828 |
| C(s) | 0.0041054 | - | - |
| NaOH(g) | 0.0020429 | 0.0000240 | 0.0000239 |
| $H_2S$ | 0.0009604 | 0.0004741 | 0.0004760 |
| COS | 0.0000654 | 0.0000292 | 0.0000293 |
| $NH_3$ | | | 0.0001790 |
| HCN | | | 0.0000560 |
| NaCN(g) | | | 0.0000283 |
| Na(g) | | | 0.0000070 |
| HCNO | | | 0.0000014 |
| $CH_2O$ | | | 0.0000013 |
| $C_2H_4$ | | | 0.0000009 |
| $(NaCN)_2$ | | | 0.0000004 |
| HCO | | | 0.0000003 |
| $CH_3$ | | | 0.0000001 |
| NaH(g) | | | 0.0000001 |
| Totals | 1.0000000 | 1.0000025 | 1.0054637 |

## REFERENCES


8-1 Private Communication. Allied Chemical Co., May 1975.

8-2 Private Communication. Allied Chemical Co., January 1977.

8-3 Robson, F. L., A. J. Giramonti, W. A. Blecher, and G. Mazzella: Fuel Gas Environment Impact - Phase Report. EPA-600/2-75-078, (NTIS No. PB249-424), November 1975.

8-4 Chandra, K., B. McElmurry, E. W. Neben, and G. E. Pack: Economic Studies of Coal Gasification Combined Cycle Systems For Electric Power Generation. EPRI AF-642, January 1978.

8-5 Curran, G. P., B. J. Koch, B. Pasek, M. Pell and E. Gorin: High-Temperature Desulfurization of Low-Btu Gas. EPA-600/7-77-031, (NTIS No. PB271-008), April 1977.

8-6 Robson, F. L., W. A. Blecher, and C. Colton: Fuel Gas Environment Impact. EPA-600/2-76-153, (NTIS No. PB257-134), June 1976.

## SECTION 9

## POWER SYSTEM EMISSIONS

### INTRODUCTION

A significant advantage of integrated coal gasification/gas cleanup/combined cycle power plants is the reduced amount of air pollutants they can be designed to emit as compared to conventional coal fired plants with flue gas desulfurization. This section discusses those emissions for which major control equipment has been incorporated or where special component designs are required; i.e., sulfur dioxide, nitrogen oxides and particulates. The emissions of these primary pollutants are summarized in Table 9-1 for the seven power plant configurations under consideration.herein. In all low-temperature cases, emission levels will be equal to or better than applicable standards. However, the systems with high-temperature cleanup will require additional fuel processing or combustion modification to reduce nitrogen oxides resulting from ammonia or other nitrogen compounds in the fuel.

Sulfur levels given in Table 9-1 include the effect of Claus plant tail-gas cleanup and are nearly all due to the presence of $H_2S$ and COS in the fuel. Low-temperature designs are quite sensitive to COS and increases in the COS level could have a significant effect on desulfurizer performance or cost. High-temperature desulfurizer performance estimates are based on an equilibrium calculation and, to avoid decomposition of calcium carbornate as a result of the low $CO_2$ concentration in the fuel gas, are based upon operating temperatures some 100 F lower than those at which Conoco did testing.

$NO_x$ levels in Table 9-1 assume that all ammonia is converted to $NO_x$. The use of a pre-mixed combustor promises to reduce thermal $NO_x$ formation by 80 percent over conventional combustors. Test data were developed by Turbo Power and Marine Systems, a subsidiary of United Technologies Corporation, in cooperation with the Texaco Development

TABLE 9-1

EMISSION SUMMARY

| Emission lb/$10^6$ Btu | U-Gas High-Steam Selexol | Low-Temperature Cleanup: U-Gas Low-Steam Selexol | Low-Temperature Cleanup: BCR Air-Blown Selexol | Low-Temperature Cleanup: BCR $O_2$-Blown Selexol | Molten Salt | High-Temperature Cleanup: U-Gas Low-Steam Conoco | High-Temperature Cleanup: BCR Air-Blown Conoco | High-Temperature Cleanup: BCR $O_2$-Blown Conoco |
|---|---|---|---|---|---|---|---|---|
| Sulfur | | | | | | | | |
| Gas Turbine Exhaust | 0.18 | 0.23 | 0.39 | 0.37 | 0.21 | 0.15 | 0.09 | 0.69 |
| Sulfur Recovery | 0.002 | 0.003 | 0.006 | 0.006 | 0.004 | 0.04 | 0.04 | 0.04 |
| Nitrogen Oxides | | | | | | | | |
| Thermal | < 0.35 | < 0.35 | < 0.35 | > 0.35 | < 0.35 | < 0.35 | < 0.35 | > 0.35 |
| Fuel Bound(1) | - | - | - | - | - | 0.17(2) | 2.52 | 2.60 |
| Particulates | .01 | .01 | .01 | .01 | .01 | .03 | .03 | .03 |

(1) Based on 100% conversion to NO

(2) $NH_3$ in fuel gas based on equilibrium calculation - actual likely higher

Company. These data demonstrate this reduction when various low-, medium- and high-Btu gases are burned in a pre-mixed burner. Extrapolation from current data shows that levels of 75 ppm (corrected to 15% $O_2$ in the exhaust) could be achieved with the pre-mix concept in all but the oxygen-blown systems. For those medium-Btu gases, the fuel temperature may be limited to some value lower than 1000 F in order to limit $NO_x$ formation.

There are problems associated with a pre-mix design, but ongoing research and development should solve them. Unfortunately, the pre-mix concept relies on fuel lean combustion to achieve the lower thermal $NO_x$ emission level. Under these conditions virtually all fuel-bound nitrogen ($NH_3$) is converted to NO. Thus, where there is $NH_3$ in the fuel, an alternate approach will be needed. Tests have been run with staged combustion techniques using a fuel rich burn followed by a rapid quench. The results show effective reduction of NO production. An evaluation of combustion modification techniques as opposed to fuel processing is needed to select the best approach.

Erosion of gas turbine blading limits the quantity and size of particulate matter that may be in the fuel. Low-temperature particulate removal processes are available to meet these limits. No high-temperature process has been demonstrated to be effective enough. Such a process is essential to the use of high-temperature desulfurization, and its feasibility has been assumed herein when postulating high-temperature desulfurization systems. Since limited data are available, a definitive particulate cleanup requirement cannot be stated. It is not clear whether or not high-temperature systems will be able to meet the needs of advanced gas turbines in this important area. It is believed that current estimates are conservative and could be met by a water wash. Of course, a water wash would obviate the basic advantage of a high-temperature desulfurizer.

## DEFINITION OF GOALS FOR CLEANUP SYSTEMS

Absolute guidelines are lacking for the degree of cleanup needed to avoid adverse health and ecological effects. The capabilities of the available or potentially available equipment here played an important part in arriving at the goals for the systems studied herein. Additionally, there are basic guidelines, such as current or proposed EPA standards for gas turbine and other power generating systems. They must be equalled or bettered for the systems to be attractive. These emission standards are presented in Table 9-2.

Because of the high metal temperatures, corrosion and erosion can be a problem in gas turbines. As a result, gas turbine manufacturers have established stringent specifications for fuels to be burned in industrial applications. A summary of pertinent specifications is given in Table 9-3. The major problem in current use of gas turbines by utilities is hot end corrosion. This results from alkali metal salts and sulfur in the fuel. The corrosion agent is the alkali metal sulfate which attacks the oxidation-

TABLE 9-2

COMPARISON OF EMISSION STANDARDS

| | Standards For Conventional Plants | | Proposed for Gas Turbines[1] (Ref. 9-1) |
|---|---|---|---|
| | Coal-Fired | Oil-Fired | Distillate-Fired |
| Sulfur as $SO_2$ lb/MMBtu | 1.2 | 0.8 | 1.0 |
| Nitrogen Oxides as $NO_2$-lb/MMBtu | 0.7 | 0.3 | 0.35 to 0.6 [2] |
| Particulates lb/MMBtu | 0.1 | 0.1 | None |

(1) Standards are given in ppm in stack gas with 15% oxygen.
(2) Variation is due to allowance for fuel-bound nitrogen - additional allowance made based on heat rate.

resistant coatings. Once these coatings have been penetrated, rapid oxidation of the base alloy occurs. Thus, although the turbine could withstand fuels having sulfur contents well above those allowed by environmental constraints, the presence of alkali metals reduces the allowable content to a much greater degree. The presence of particulates also contributes to corrosion since any spalling of the coatings due to impingement could result in subsequent oxidation of the base alloy.

Particulate Loading

One of the major concerns in setting fuel specifications is the particulate content. As can be seen in Table 9-3, the particulate loadings are low, varying from less than 1 ppm to about 30 ppm. The reason for the low allowable loadings is the potential erosion of the turbine blades.

A number of attempts have been made to utilize coal directly in a turbine (References 9-2, 9-3, 9-4). Due to excessive erosion, all have failed to obtain reasonable machine lifetime. Yet, the actual limitations of particulate content or size distribution have not been adequately defined. A previous UTRC study (Reference 9-5) on methods of cleaning emissions from jet engine test cells showed that the mean diameter of the particles emitted from liquid-fuel burning engines was 0.1 μ with over 99 percent of the particles being less than 1 μ. Since erosion is not a problem with these engines, it can be concluded that particles of 1 μ or smaller in the fuel or combustion products are not harmful to engines. In fact, it was pointed out in this study that the use of combustion additions to eliminate visible emissions resulted in agglomerated particles of greater than 1 μ

*TABLE 9-3*

*GAS TURBINE FUEL SPECIFICATIONS*

| Constituent | P&WA Spec. 527[1] | Suggested[2] | Westinghouse[3] | General Electric[1] |
|---|---|---|---|---|
| Sulfur | 1.8 Mol % $H_2S$ | <1 Mol % $H_2S$ or Less Than Amount Required to Form 5 ppm Alkali Metal Sulfates | 2% by Weight | Less Than Amount Required to form 3 ppm Alkali Metal Sulfates |
| Particulates | 0.08 lb/$10^6$ $ft^3$ (0.00056 gr/$ft^3$) | 0.01 gr/$ft^3$ 40 μ Maximum | Limits by Material[4] | 30 ppm (Weight) (0.01 g/$ft^3$) |
| Metals | | | | |
| Vanadium | <0.2 ppm (Weight) | ----- | 0.5 ppm (Weight) | ----- |
| Sodium and Potassium | <0.6 ppm (Weight) | see Sulfur Spec. | 0.5 ppm (Weight) | See Sulfur Spec. |
| Calcium | 0.1 ppm (Weight) | ----- | 10 ppm (Weight) | ----- |
| Lead | 0.1 ppm (Weight) | ----- | 2 ppm (Weight) | ----- |
| Copper | 0.2 ppm (Weight) | ----- | ----- | ----- |

(1) For aircraft-derived turbine using gaseous fuels
(2) For industrial turbines; subject to revision
(3) Liquid fuel specifications
(4) Given in Ref. 5-9 as $4 \times 10^{-4}$ gr/$ft^3$ of 2μ to 10μ particulate in gaseous fuels

(above the size range which results in refraction). While deposition did occur, there was no erosion which indicates that the soft compounds which left the airstream and impinged on the blades did not damage them.

Tests in the United Kingdom on fluid-bed combustion (Reference 9-6) also indicate that soft particles with quite large diameters of about 50 μ do not appear to cause erosion. However, hard particles may result from coal combustion above the ash fusion point Tests carried out in Australia (Reference 9-7) indicate that such particles cause erosion at sizes above 6μ. Perhaps the most useful guide is work done in the petro-chemical industry on turbine erosion (Reference 9-8). Results of this work are shown in Figure 9-1, where engine life is shown as a function of particle size and loading. The shape of Figure 9-1 indicates that the relationship between lifetimes, particulate loading and particulate size would be of the form

$$L = \frac{\text{Constant}}{\mu \cdot C} \tag{9-1}$$

where

L = lifetime

μ = particle size

C = loading

Thus, for a given lifetime, a reduction in particle size would be accompanied by higher allowable loadings. For example, assuming linear particle size distribution, capture of particles of 2 μ and above would allow twice the particulate concentration compared to what would be allowed by capture of 4 μ and larger particles.

Suggested Low-Btu Fuel Gas Specifications

The values for loadings in Table 9-3 are based upon methane fuel. For low-Btu fuel, both the heating value and the density will affect the allowable loadings. For fuel gases with heating values of 150 Btu/ft$^3$ (about 2500 Btu/lb), the value in Table 9-3 would be reduced by approximately a factor of eight if the solids loading to the turbine were to be kept constant. Using the foregoing approach, Table 9-4 has been prepared to serve as a guideline for low-Btu fuel gas.

In addition to the usual fuel property limitations, Table 9-4 includes a value for fuel nitrogen compounds expresed in terms of $NH_3$. The limitation is based upon 90 % conversion of fuel nitrogen to $NO_x$.

SULFUR EMISSIONS

The variation in sulfur emission shown in the summary table is somewhat arbitrary. In most cases, changes in equipment design could be effected to

## EFFECT OF PARTICLE SIZE ON ENGINE LIFETIME

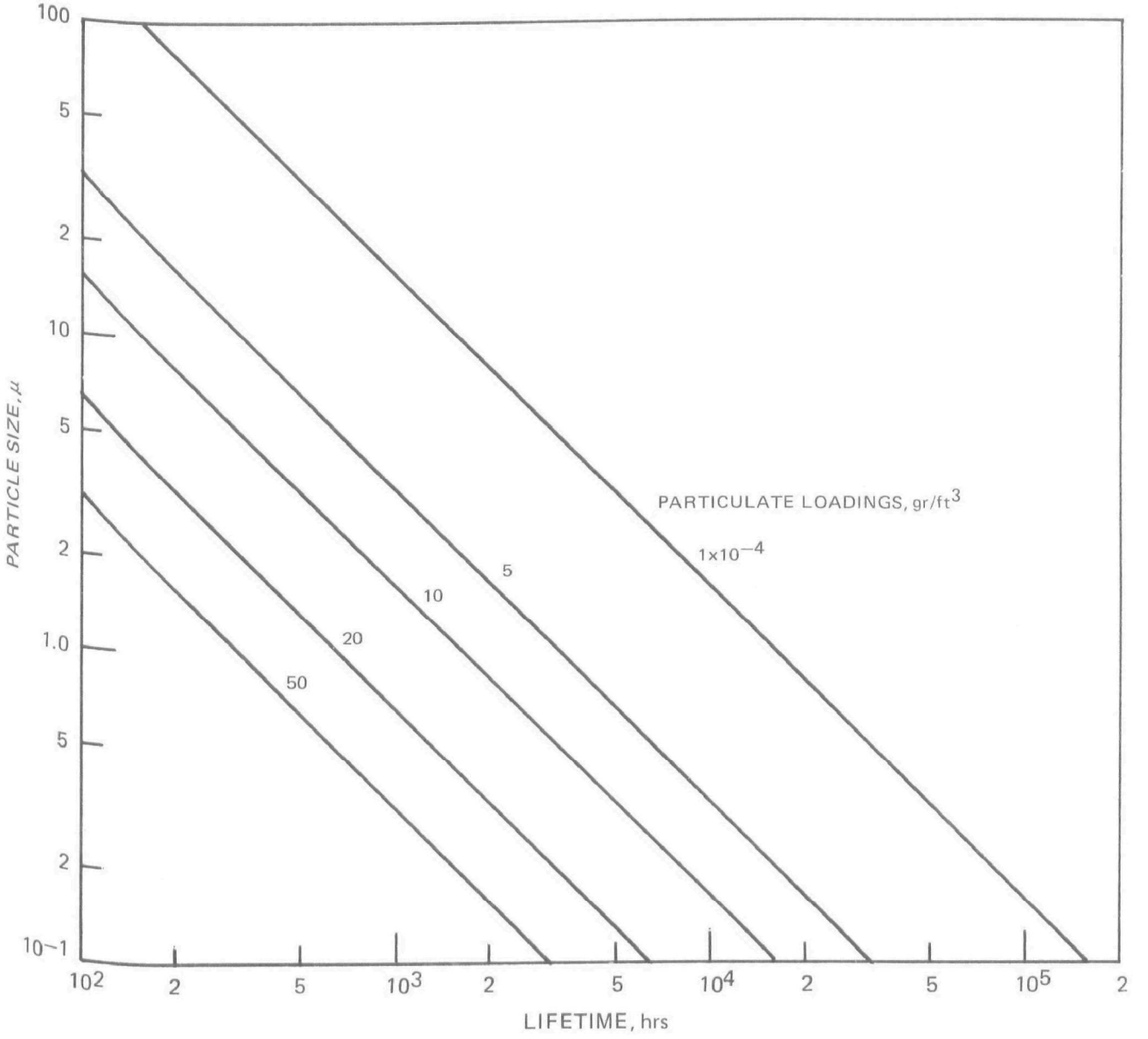


RO2–192–1

TABLE 9-4

SUGGESTED LOW-BTU FUEL GAS CLEANUP SYSTEM GOALS

| Property | Specification | Resulting Emission |
|---|---|---|
| Sulfur | 0.05 Mol % or Less Than Amount to Form 0.6 ppm Alkali Metal Sulfates | 0.44 lb $SO_2$/MMBtu |
| Particulates | 4 ppm (weight) (0.0012 gr/ft$^3$) | <0.01 lb |
| Metals | | |
| Vanadium | <0.03 ppm (weight) | |
| Sodium and Potassium | See Sulfur Spec | |
| Calcium | <0.012 | |
| Lead | <0.012 | |
| Copper | <0.0025 | |
| Nitrogen Compounds | 500 ppm as $NH_3$ | 0.3 lb $NO_2$/MMBtu |

reduce the levels. Also, estimated raw gas compositions have a decided effect on cleanup performance. Such factors have been examined in an effort to identify the sensitivity of each design to sulfur emission level.

An important factor in all systems, especially as removal efficiency increases, is the form in which the sulfur appears in the raw fuel gas. In this study it has been assumed that all sulfur would be in the form of COS or $H_2S$; however, potentially significant quantities of other sulfur compounds could be present (as compared to a 100 ppm level in the clean gas) Since other compounds have not been definitively or quantitatively identified, their effect on the system has not been evaluated in any detail. While it is anticipated that the cleanup processes will be able to cope with such gases, removal or recovery performance will likely suffer. Thus, where sulfur emissions are shown to be on the order of 0.1 $lb/10^6$ Btu, it is quite possible that they could be higher by a factor of two or that the associated equipment may be more complex than anticipated.

## Low-Temperature Systems

With the exception of the molten salt system, all the systems studied herein incorporate a Selexol desulfurizer with sulfur recovery via a Claus plant with Beavon tail-gas cleanup. Claus plant emissions are virtually zero and the emission level is ultimately determined by the Selexol system design. In the case of the molten salt gasifier, sulfur removal occurs both in the gasifier and in the $CO_2$ recovery tower which is a necessary part of the salt recovery process. The $H_2S$ is stripped from the solution and sent to a Claus plant with tail gas cleanup as in the Selexol designs. Thus, in both cases, sulfur emissions depend only on the degree of removal of sulfur compounds from the main fuel gas stream.

### Selexol Design Basis--

Each of the Selexol designs is based on removal of virtually all $H_2S$ (down to approximately 30 ppm). Under these conditions, only 30% of the COS is removed. Thus, nearly all of the sulfur emissions are due to COS in the fuel gas. The level of COS in the raw gas would be on the order of 5% of total sulfur at equilibrium (see Tables 8-12 and 8-13). As hard data are generally unavailable, estimates vary between equilibrium and two times the equilibrium level. This is the principal reason for the variation in emission levels between the BCR and U-gas systems.

### Variation of Sulfur Emission Level--

The parametric studies presented in Section 8 showed that, for a refrigerated Selexol absorber, there was little to be gained in terms of performance and cost by allowing the level of $H_2S$ in the clean gas to rise from 30 to 1000 ppm. However, to further reduce total sulfur level in the gas will require a significant increase in solvent flow rate. This in turn will result in increased equipment cost and increased utility consumption.

When solvent flow rate is sized for $H_2S$ removal, approximately one third of the COS is removed. To remove COS to the 100 ppm level requires that solvent flow rate be significantly increased. To achieve a high degree of removal of a particular component requires a solvent flow-rate inversely proportional to its solubility. The effect of this change on the performance and cost of two air-blown BCR-type gasifiers designs is compared in Table 9-5. Utilities increase by a factor greater than two, while cost is approximately doubled. Power output was penalized at the rate of 20 lbs steam/kWh giving a total decrease in plant output of some 38 MW in going from $H_2S$ to COS based design. Of the $48/kW increase in fuel system cost, some $10/kW can be attributed to the decreased output.

The Selexol desulfurizer systems for the other gasifiers considered were sized on the basis of $H_2S$ removal. Therefore, a similar improvement in COS removal can be expected for each of the other systems with a comparable increase in both cost and utility consumption. The conclusion to be drawn is that desulfurizer cost can vary by a factor of two depending on the composition of the raw fuel gas.and the degree of sulfur removal which is required.

Molten Salt System--

Because 85% of the sulfur is retained in the melt, total sulfur in the raw gas is quite low. The COS level is reduced correspondingly and, even with no COS removal, the emission level is quite low. After leaving the gasifier, the raw gas is scrubbed with a sodium carbonate solution to recover $CO_2$. During this process, most of remaining $H_2S$ is removed. In this study, no COS removal is assumed (Reference 9-9). This may be a conservative estimate as COS is reported to be hydrolyzed (Reference 9-10) in the hot potassium carbonate solution of the Benfield system. Under appropriate conditions complete COS removal is claimed for that process.

NITROGEN OXIDES

Conventional gas turbine burners firing distillate fuels are concerned only with thermally generated $NO_x$. Its formation is both temperature and time dependent. Water injection is the current method used to control thermal $NO_x$ emissions, but they could eventually be controlled by burner design. Fuel gas from coal can be expected to contain significant amounts of nitrogen bearing compounds (usually lumped together as ammonia). At the levels expected and under the expected burner design conditions, virtually all of the nitrogen in the ammonia will form nitric oxide (Ref. 9-11). It so happens that measures most appropriate for reduction of thermal $NO_x$ tend to enhance the production of NO from ammonia. Because of this, both problems will be treated separately. Low-temperature systems which include a water wash need be concerned only with thermal $NO_x$. In the high-temperature systems, a choice must be made between further fuel processing and combustion modification.

TABLE 9-5

COMPARISON OF SELEXOL DESIGNS

BCR Air-Blown Gasifier

| | $H_2S$ Based Design | COS Based Design |
|---|---|---|
| L. P Steam Required - lb/hr | 131,500 | 317,000 |
| Power Required - kW | 20,400 | 48,800 |
| Installed Cost - $\$10^6$ | 26.6 | 51.1 |
| $H_2S$ in Clean Gas - ppm | 32 | 10 |
| COS in Clean Gas - ppm | 450 | 90 |
| Sulfur Emission - lb $SO_2$/MMBtu | 0.39 | 0.08 |
| Net Plant Output - MW | 1,098 | 1,060 |
| Fuel System Cost - $\$10^6$ (Including Contingency, Escalation and Interest During Construction) | 277.5 | 319.1 |
| Specific Cost - $/kW | 253 | 301 |
| Generating Efficiency - | 0.439 | 0.424 |

## Thermally Produced Nitrogen Oxides

Data for various types of fuel gas in conventional burners show that low-Btu fuel gas will produce little thermal $NO_x$. The range of data for low-, medium-, and high-Btu gas with fuel at ambient temperatures is given in Figure 9-2. However, reheating of the clean fuel gas, while improving efficiency, results in a higher flame temperature and, thus, more thermal $NO_x$. As Figure 9-2 shows, burning at off-stoichiometric conditions, i.e., at lower than stoichiometric flame temperatures, offers a means of controlling production of thermal $NO_x$. The data in this figure were obtained by Turbo Power and Marine Systems a subsidiary of United Technologies Corporation. They have been carrying out a series of tests on low- and medium-Btu fuel gases produced by an experimental gasifier at the Texaco Development Company's Montebello, California research facility.

Of particular interest are results from testing of premixed (fuel and air mixed prior to introduction into the combustor) burners. Figure 9-2 (Reference 9-12) shows the $NO_x$ emissions as a function of source temperature rise for several values of fuel chemical heating value. In the test series, the fuel gas was delivered at essentially ambient temperature. The theoretical stoichiometric temperatures are given. In conventional burners, indicated by the areas between the solid lines, stoichiometric temperatures are generally achieved. Also shown in Figure 9-2 are the approximate emissions for burners in which the fuel and air have been premixed. These are shown as off-stoichiometric conditions since complete mixing will eliminate the possibility of stoichiometric combustion which occurs in conventional burners. While no significant reduction was noted for low-Btu gas (the emissions were already low), use with the medium-Btu gas indicated a large reduction.

Stoichiometric flame temperatures given in Figure 9-2 apply to the point of maximum burner $\Delta T$. Reduced burner $\Delta T$ corresponds to part throttle conditions for a gas turbine. At part throttle conditions, combustion air temperature is decreased with a corresponding decrease in stoichiometric temperature and $NO_x$ production. As flame temperature is increased above 3600 R, the increase in thermally produced $NO_x$ is exponential. For the systems studied here, fuel gas temperatures ranged from 800 to 1000 F and the resultant stoichiometric flame temperatures, given in Table 9-6, are in the high thermal $NO_x$ zone. Figure 9-3 (Reference 9-13) gives an estimate of the concentration as a function of combustor exit temperature and theoretical flame temperature. It differs from the data of Figure 9-2 in that it shows a stronger temperature dependence. However, it is clear from both figures that conventional combustors will result in the production of excessive thermal $NO_x$. (Note that the data of Figure 9-2 is at atmospheric pressure and must be corrected for turbine pressure ratio.).

# $NO_x$ PRODUCTION FROM COMBUSTORS BURNING LOW–BTU AND MEDIUM–BTU GAS

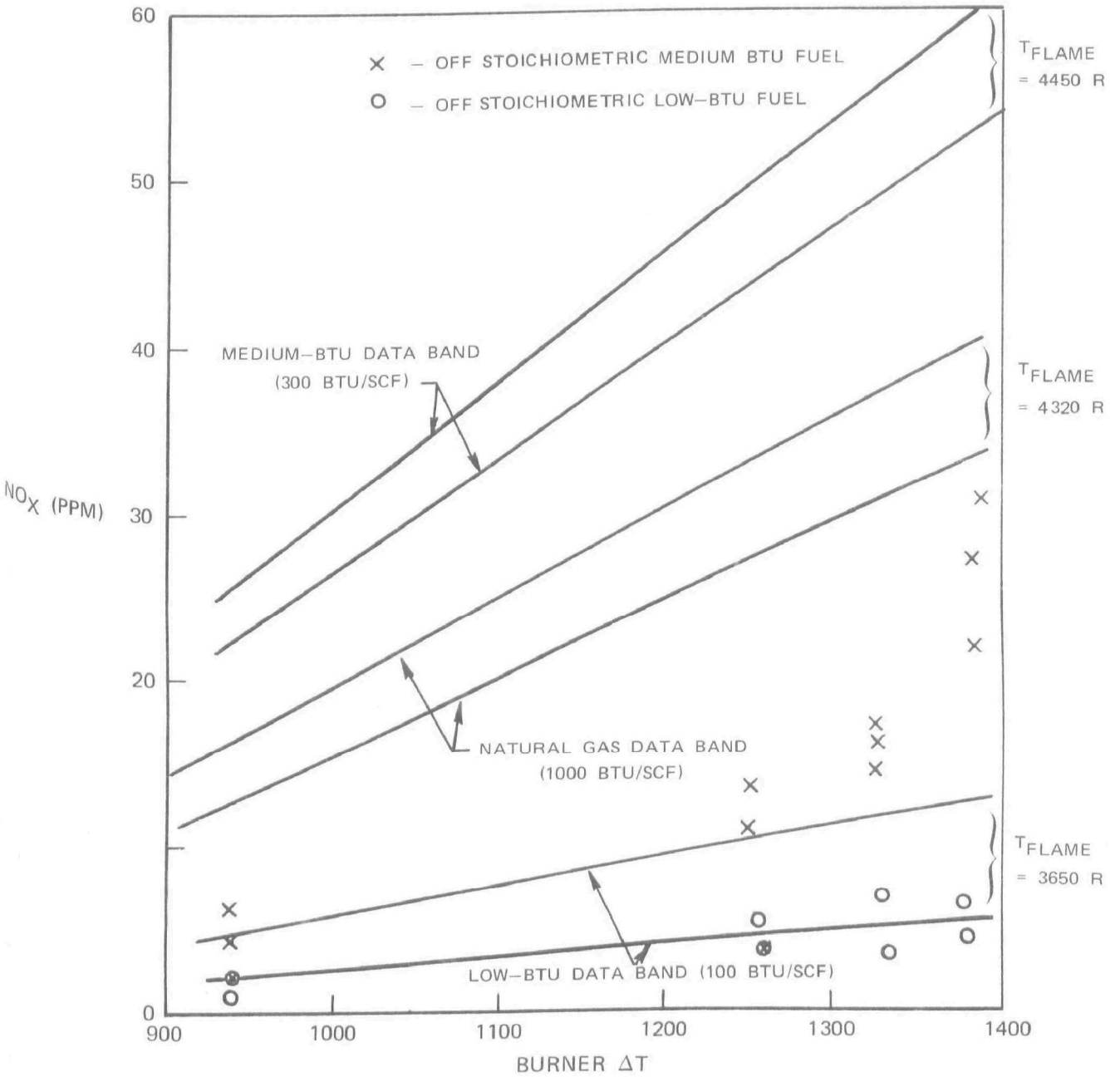


76–02–91–4

TABLE 9-6

THEORETICAL FLAME TEMPERATURES

Air at 793 F
Equivalence Ratio = 1.0

| System | Fuel Gas HHV Btu/SCF | Fuel Gas Temp F | Fuel/Air lb/lb | Flame Temperature F/R |
|---|---|---|---|---|
| U-Gas Selexol | 158.6 | 944 | .681 | 3734/4194 |
| U-Gas Low-Steam Selexol | 169.7 | 944 | .639 | 3870/4330 |
| BCR Air-Blown Selexol | 177.9 | 926 | .608 | 3946/4406 |
| BCR $O_2$-Blown Selexol | 332.4 | 926 | .262 | 4494/4954 |
| Molten Salt | 154.0 | 805 | .724 | 3800/4260 |
| U-Gas Low-Steam Conoco | 160.9 | 1,000 | .675 | 3805/4265 |
| BCR Air-Blown Conoco | 170.0 | 1,000 | .639 | 3900/4360 |
| BCR $O_2$-Blown Conoco | 268.0 | 1,000 | .335 | 4240/4700 |

FIG. 9–3

## NITRIC OXIDE FORMATION IN GAS TURBINE BURNER

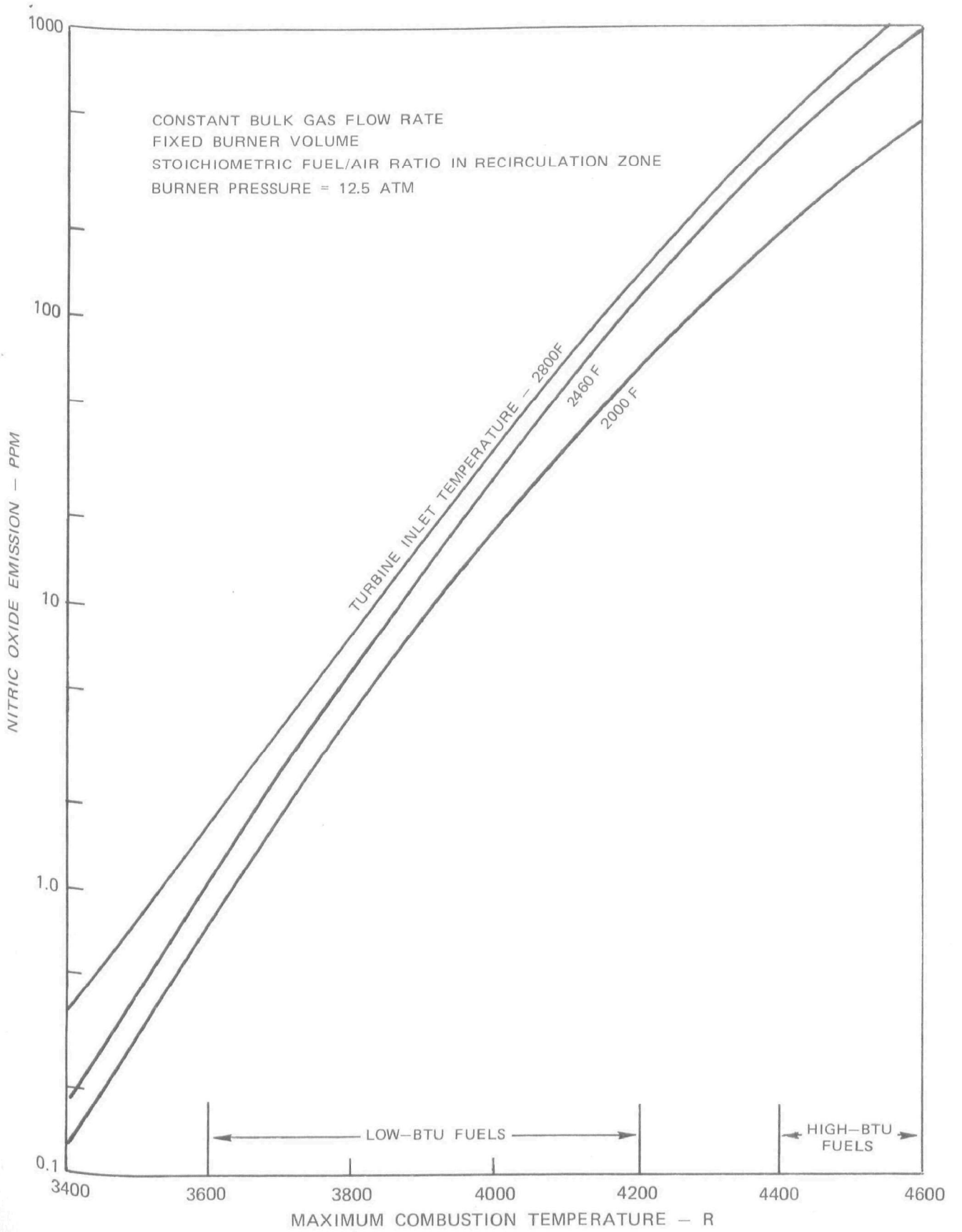


76–02–91–1

Thermal Formation Mechanism--

Complex computer simulations have been developed by United Technologies and others that model the combustor internal flow-field, the combustion reactions, and the thermal $NO_x$ kinetics (Reference 9-14 through 9-19). The simplified $NO_x$ kinetic predictive techniques are generally based on the fact that the NO formation rate is very slow relative to the hydrocarbon combustion reaction rate so that the two can be decoupled in predicting NO formation; i.e., the combustion reactions can be assumed to be at equilibrium in estimating NO formation rates. This is illustrated in Fig. 9-4 which is the result of a kinetic model considering both combustion and NO kinetics (Reference 9-20). For that system, the combustion reaction is essentially complete in 60 microseconds at which time the NO concentration is several orders of magnitude less than its final or equilibrium value.

The thermal mechanism for formation of NO from nitrogen and oxygen was originally proposed by Zeldovich (Reference 9-21). It consists of a chain of two reactions for the production of nitric oxide:

$$O + N_2 \rightleftharpoons NO + N \tag{9-2}$$

$$N + O_2 \rightleftharpoons NO + O \tag{9-3}$$

While there is evidence of the formation of "prompt" NO (Reference 9-22), it is believed that the bulk of the NO is formed by the thermal mechanism. A third reaction,

$$OH + N \rightleftharpoons NO + H \tag{9-4}$$

can become important when the oxygen concentration becomes low under fuel-rich conditions. Several equivalent solutions to the above equations are given in References 9-23 through 9-25. They all assume that the nitrogen atoms are in equilibrium with the products of combustion and that the flame temperature is constant.

By making several approximations, a simplified solution (Reference 9-25) can be obtained that shows good agreement with more complex models and correlates with test data:

$$\rho = \frac{\theta t}{2} \tag{9-5}$$

FIG. 9-4

# CONCENTRATION-TIME PROFILES FOR PREMIXED $H_2$-CO-AIR MIXTURE

INLET TEMPERATURE = 1800 R

PRESSURE = 10 ATM

COMBUSTION TEMPERATURE = 4460 R

EQUIVALENCE RATIO = 1.0

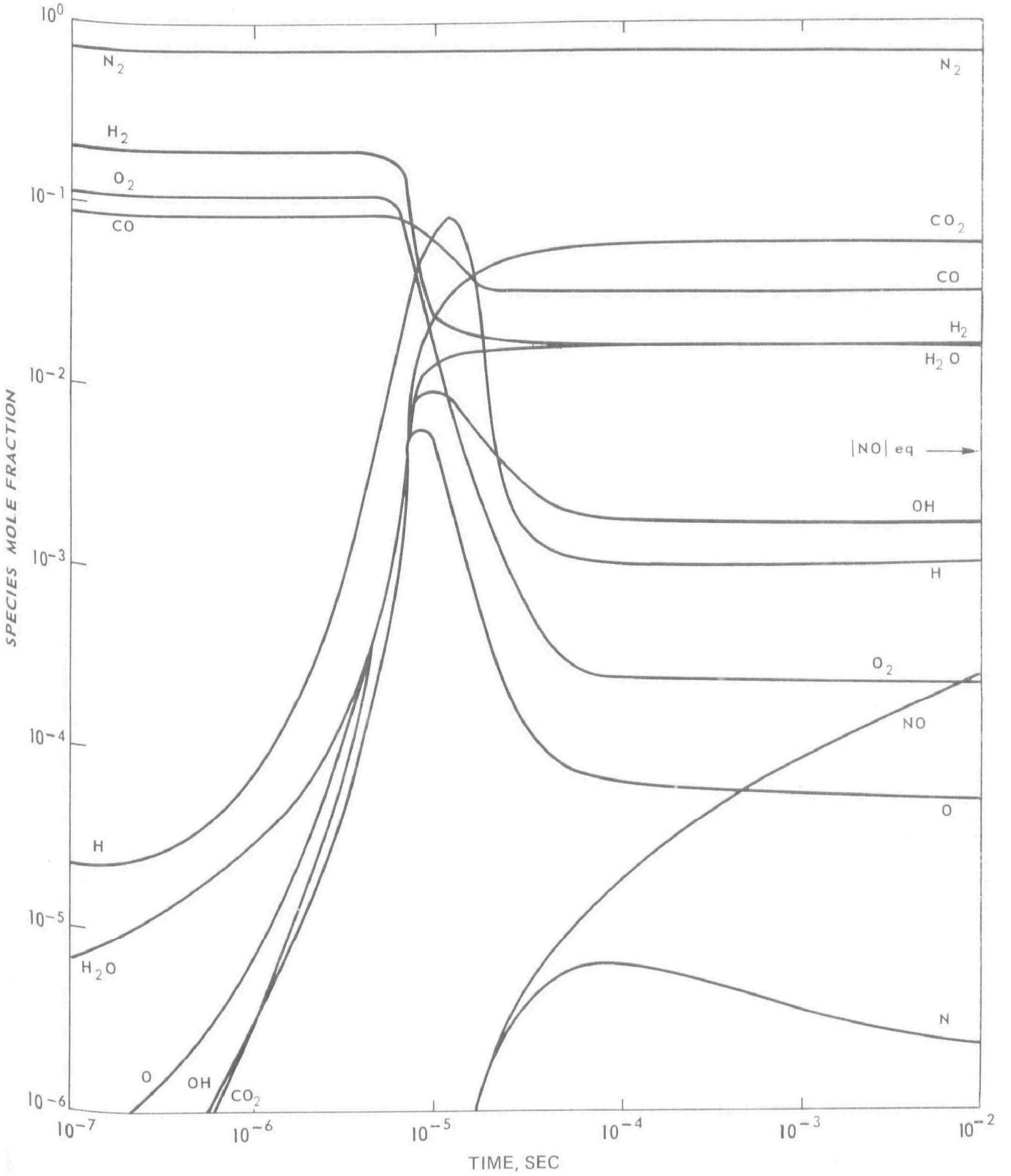

where $\rho = \frac{X_{NO}}{(X_{NO})_e} = \frac{\text{mole fraction NO}}{\text{mole fraction NO at equilibrium}}$

$t$ = apparent residence time, sec

and $$\theta = \frac{4.24 \times 10^{15}\ P^{1/2}}{T} (X_{N_2})^{1/2} \exp \frac{-114,572}{RT} \qquad (9\text{-}6)$$

where $\theta$ = NO formation parameter, $sec^{-1}$

$T$ = temperature, K

$P$ = pressure, atm

$X_{N_2}$ = mole fraction of $N_2$

$R$ = gas constant, 1.987 $\frac{cal}{mole - {}^oK}$

As suggested in Reference 9-23, if $X_{N_2}$ is assumed to be constant, the curve shown in Figure 9-5 would result. The mole fraction of $N_2$ is in the range of .71 to .73 for distillate and low-Btu gas. It can be as low as 0.6 for medium-Btu gas but this only introduces a 10% error. The above are a close approximation for values of $\rho$ on the order of 0 to 0.2 and equivalence ratios near unity. Equivalence ratio is defined as the ratio of actual fuel/air ratio and the stoichiometric fuel/air ratio.

Equilibrium composition for a low-Btu fuel is shown in Figure 9-6. In estimating $NO_x$ formation, the parameters of interest in Equation 9-5 are equilibrium NO concentration and adiabatic flame temperature. These are presented in Figures 9-7 and 9-8 as a function of equivalence ratio and fuel temperature. While fuel temperature does have a significant effect on flame temperature and rate constant, it is also apparent that adjustment of the equivalence ratio (off-stoichiometric combustion) could be valuable in offsetting their bad effects.

Reduction of Thermal $NO_x$--

The $NO_x$ reduction potential for off-stoichiometric combustion is shown in Figure 9-9 for two modern aircraft engines burning liquid fuel. Data for methane with air in a well stirred reactor are also shown. All data have been corrected to similar conditions to permit comparison. It appears that the practical limit that can be achieved as well as the ability of the combustor to achieve that limit tend to favor lean conditions ($\phi < 1.0$).

## NO RATE PARAMETER AS A FUNCTION OF TEMPERATURE

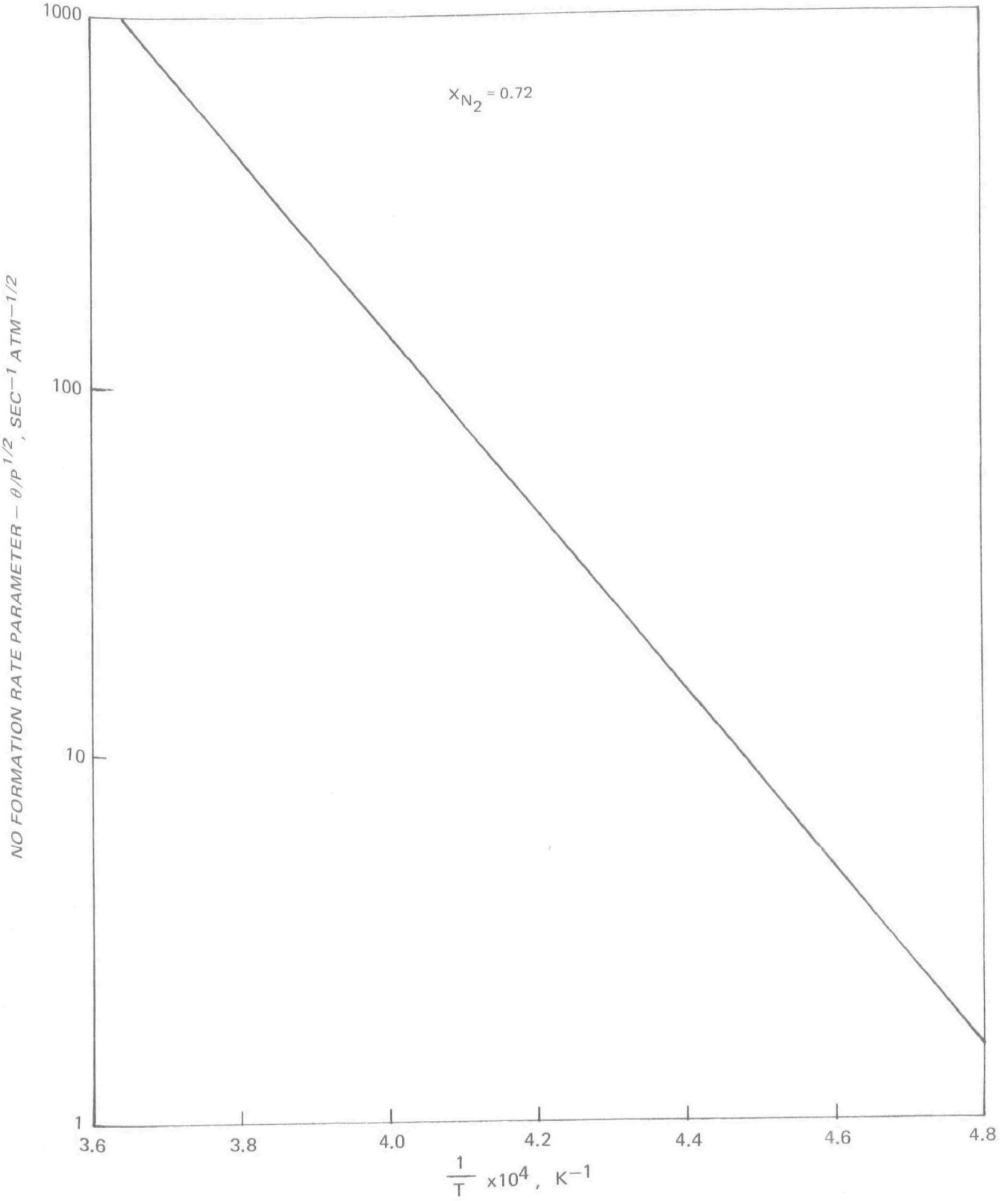


76–05–223–3

EQUILIBRIUM COMBUSTION PRODUCTS LOW BTU GAS

144 BTU / SCF

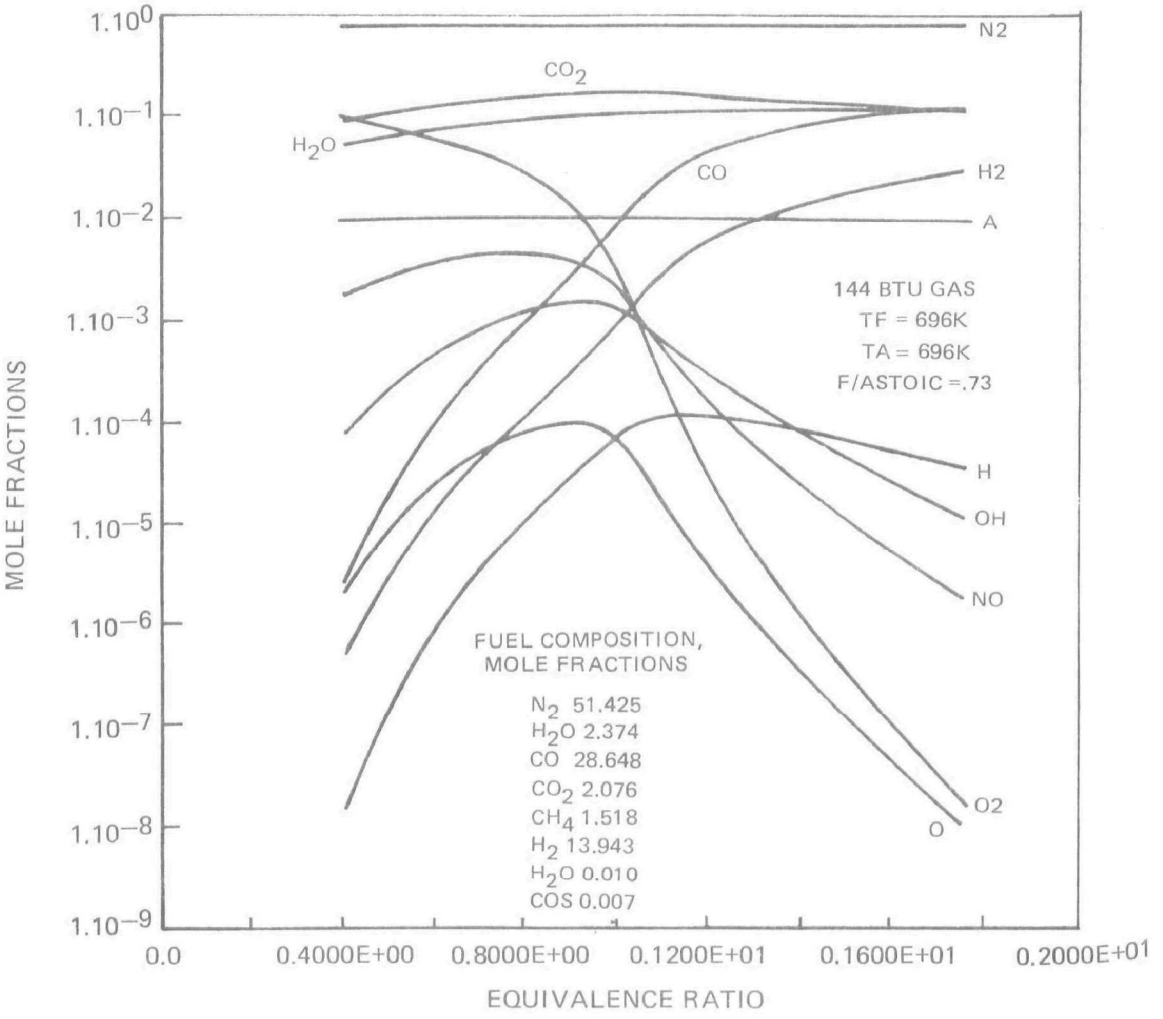

FIG. 9–7

## EQUILIBRIUM NO CONCENTRATION MOLTEN SALT GASIFIER FUEL

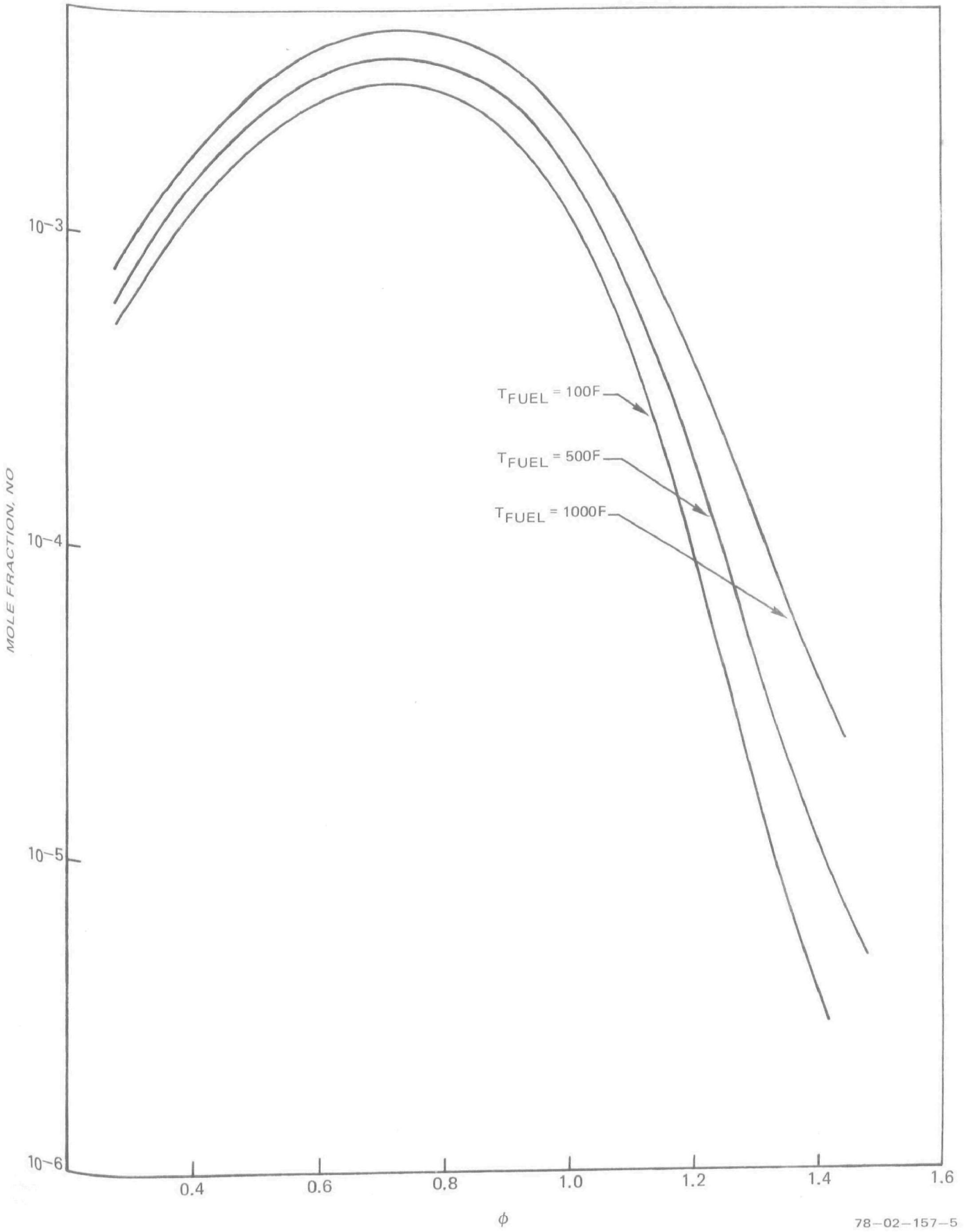


78–02–157–5

## ADIABATIC FLAME TEMPERATURE MOLTEN SALT GASIFIER FUEL

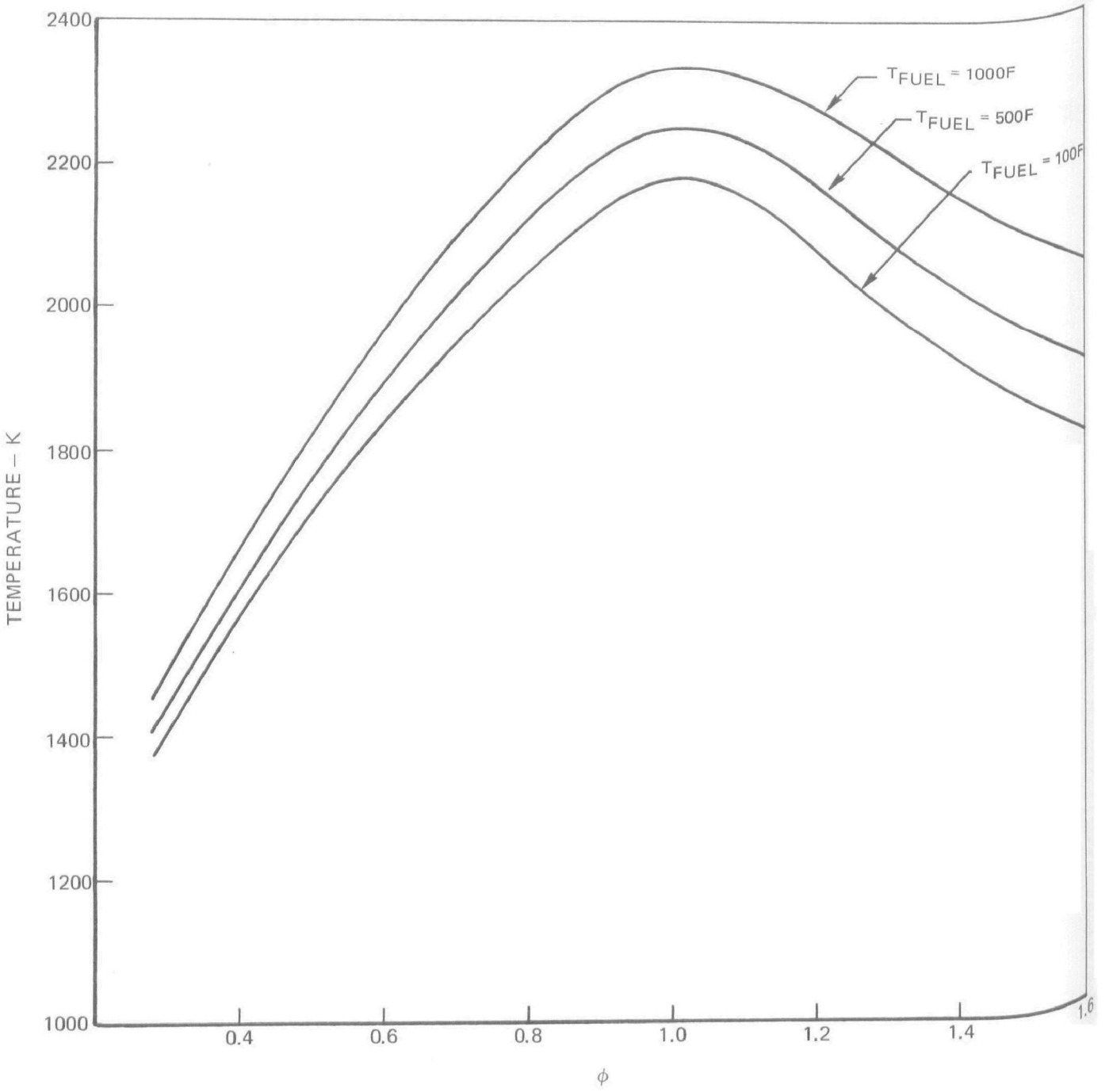


78-02-157-4

## COMPARISON OF CONVENTIONAL COMBUSTOR $NO_x$–EQUIVALENCE RATIO RELATIONSHIP WITH THAT OF A WELL–STIRRED REACTOR

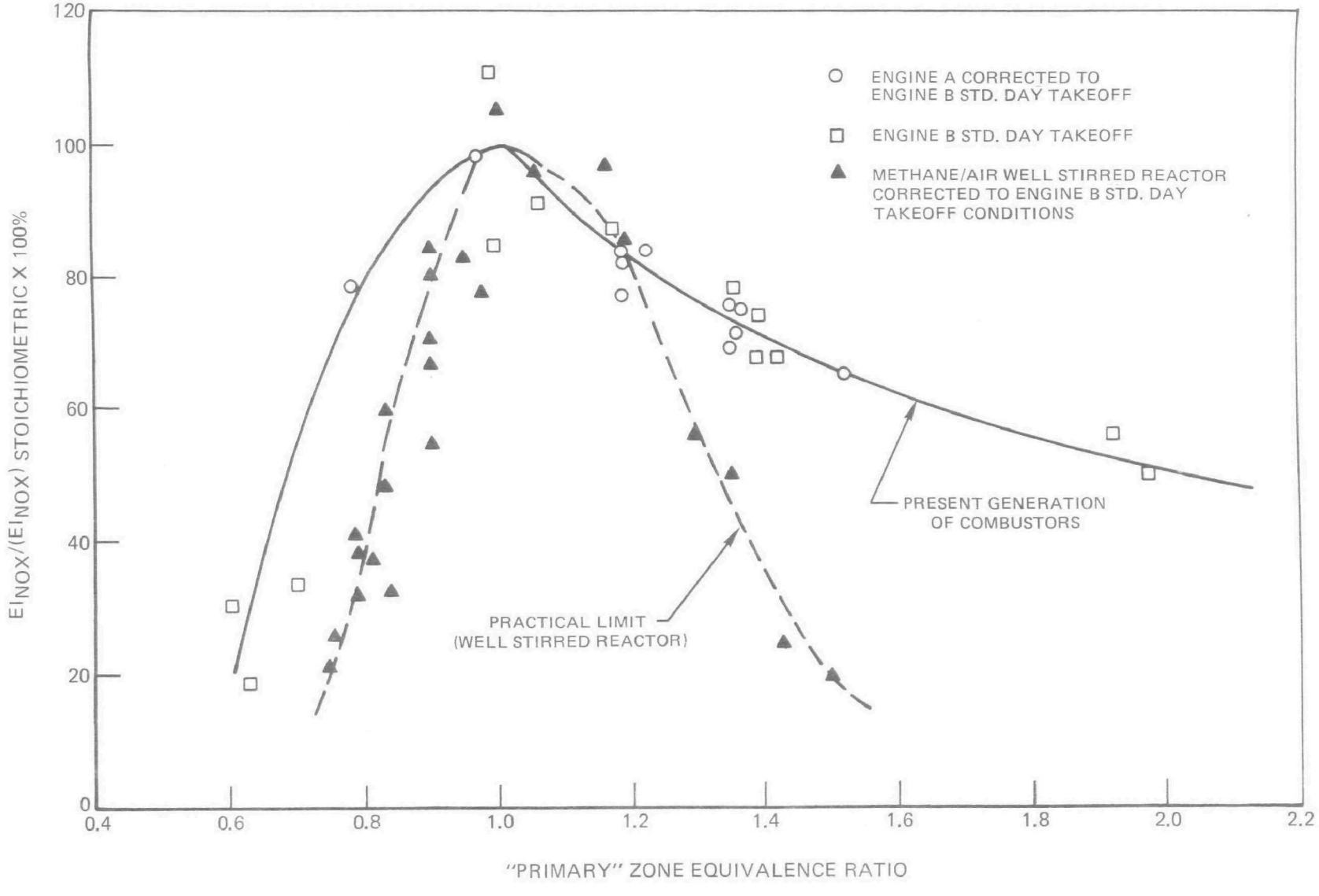


FIG. 9–9



78–02–105–1

Comparing the engine results with those of the well-stirred reactor reveal the very important effects on $NO_x$ formation of fuel preparation and mixing. With gaseous fuel, the well-stirred reactor probably represents the best level of mixing that can be achieved in practice without premixing the fuel and air prior to combustion. For the benefits of mixing to be worhwhile, the conclusion is inescapable: if either a rich or a lean combustion alone is selected to reduce $NO_x$, considerably better mixing will be required than is presently obtainable with conventional liquid-fueled combustors.

The reduction in $NO_x$ that can be expected from reducing residence time in the flame zone for lean combustion systems is shown in Figure 9-10. The data shown represents relatively unsophisticated "early quench" methods where large amounts of relatively cool dilution air are introduced very early, at or before the end of the primary zone. This is done to freeze chemical reactions. As can be seen, to achieve significant reductions in $NO_x$ with this method alone, very large reductions in residence time are required. In general, the required reductions cannot be achieved without disturbing combustor performance.

Mixing on a molecular level is necessary for the combustion of a mixture to take place at a flame temperature equivalent to the bulk fuel-air ratio. Typical characteristic times, shown in Table 9-7 for combustion of natural gas in air in the FT4 combustor, indicate that mixing time is the largest characteristic time of those for the processes involved. Therefore, if the full benefit of low flame temperatures were to be realized by burning off-stoichiometric, premixing of the reactants prior to introduction into the combustor would be necessary. If this were not done, combustion would be controlled by mixing and diffusion flames would exist with their associated high temperatures.

When good premixing is achieved, large reductions in exhaust $NO_x$ can be obtained. Figure 9-11 shows the arrangement of a combustor rig in which premixing to an equivalence ratio of 0.75 was achieved external to the combustor in a high-pressure drop mixing chamber. The fuel was natural gas and the test pressure was 1.3 atmospheres. The residence time after mixing was limited to 8 msec to avoid autoignition. The fuel and air mixture was introduced into a modified FT4 combustor through a multitude of individual tubes. Residence time in the primary zone was estimated at 3 msec.

The premixed results are compared in Figure 9-12 with the results from a conventional FT4 combustor when burning No. 2 liquid fuel at the conditions for the rig tests. The results of an early quench to about the same bulk equivalence ratio are also shown. The low $NO_x$ benefits of premixing the fuel and air prior to combustion are clearly revealed. The limited mixing available in the conventional combustor is demonstrated by the early quench results which, although showing a significant reduction in $NO_x$, do not show anything close to the potential of the premix rig.

REDUCTION IN $NO_x$ EMISSION BY REDUCTION IN RESIDENCE TIME–INFORMATION BASED ON EXPERIMENTAL DATA

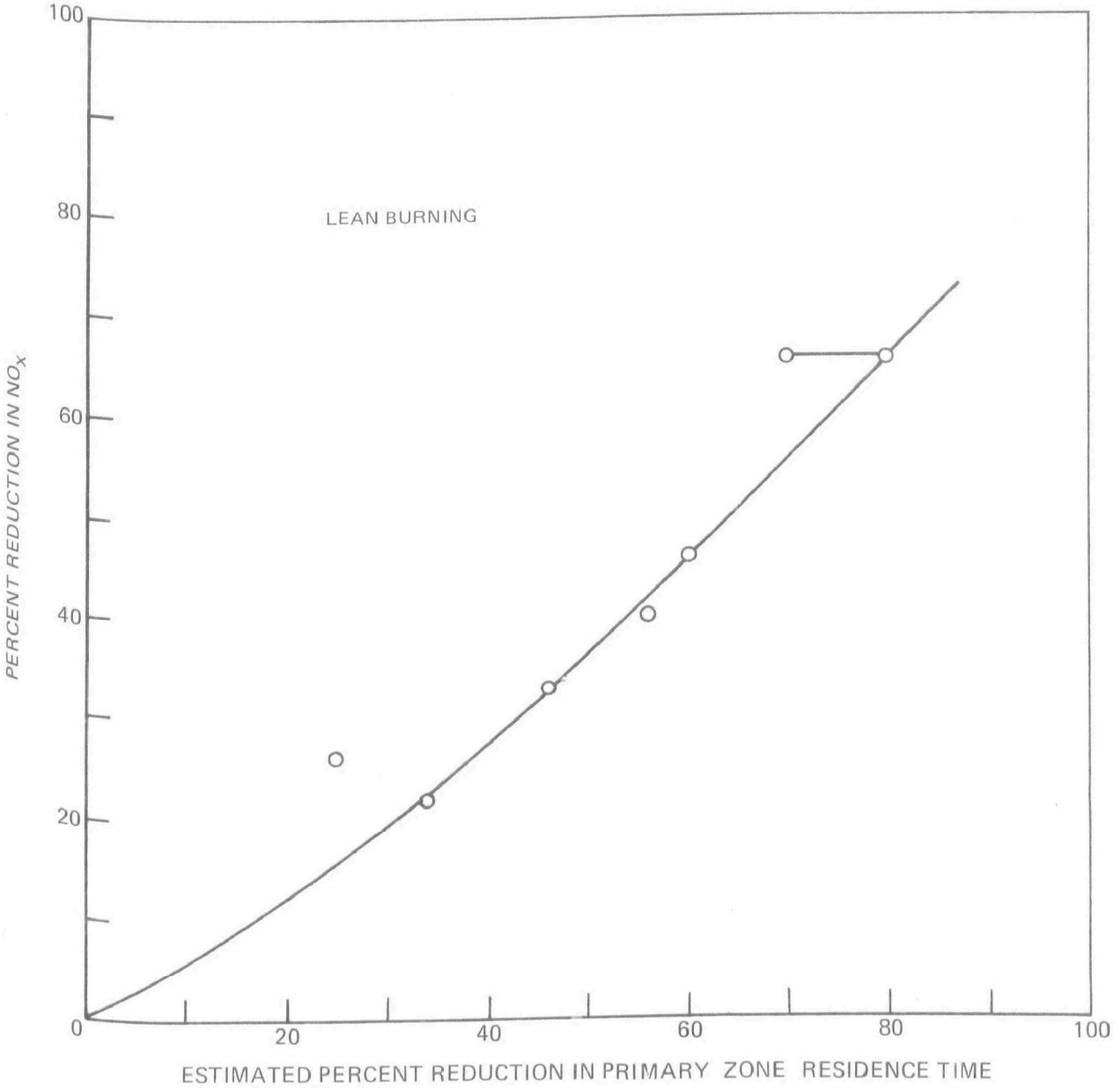


78–02–105–3

TABLE 9-7

CHARACTERISTIC TIMES FOR A NATURAL GAS COMBUSTOR

| PRIMARY EQUIVALENCE RATIO | VAPORIZATION TIME, ms | TURBULENT MIXING TIME, ms | COMBUSTION TIME, ms | $NO_x$ FORMATION TIME TO 500 ppmV, ms | RESIDENCE TIME, ms |
|---|---|---|---|---|---|
| 0.7 | 0 | 10 | 0.20 | 19 | 5 |
| 1.0 | 0 | 10 | 0.13 | 0.7 | 5 |
| 1.2 | 0 | 10 | 0.2 | 106 | 5 |

## FT4 PREMIX RIG WITH EXTERNAL MIXING

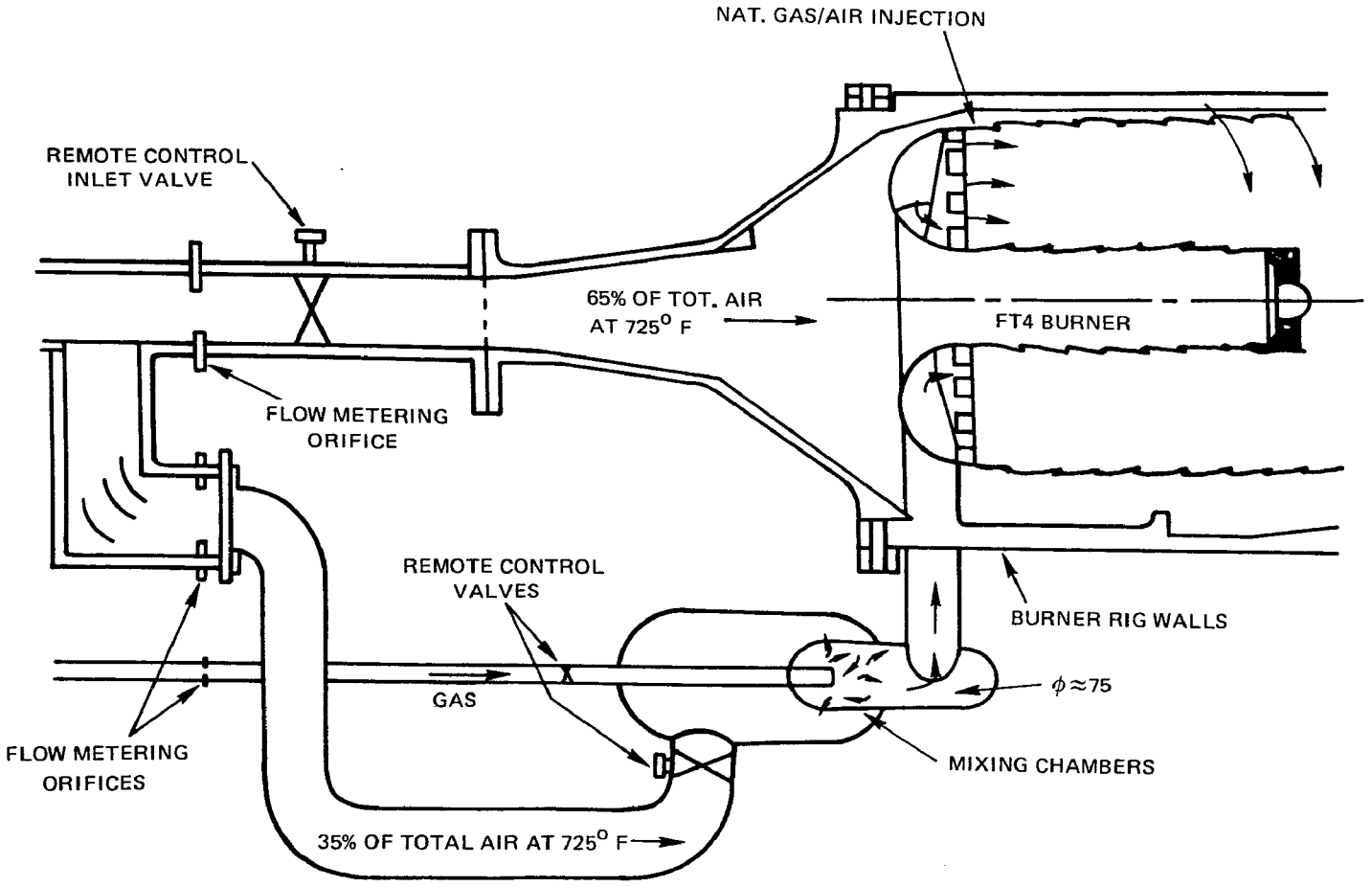


FIG. 9–11



78–02–105–4

COMPARISON OF RAPID QUENCH AND PREMIX $NO_x$ WITH BASELINE

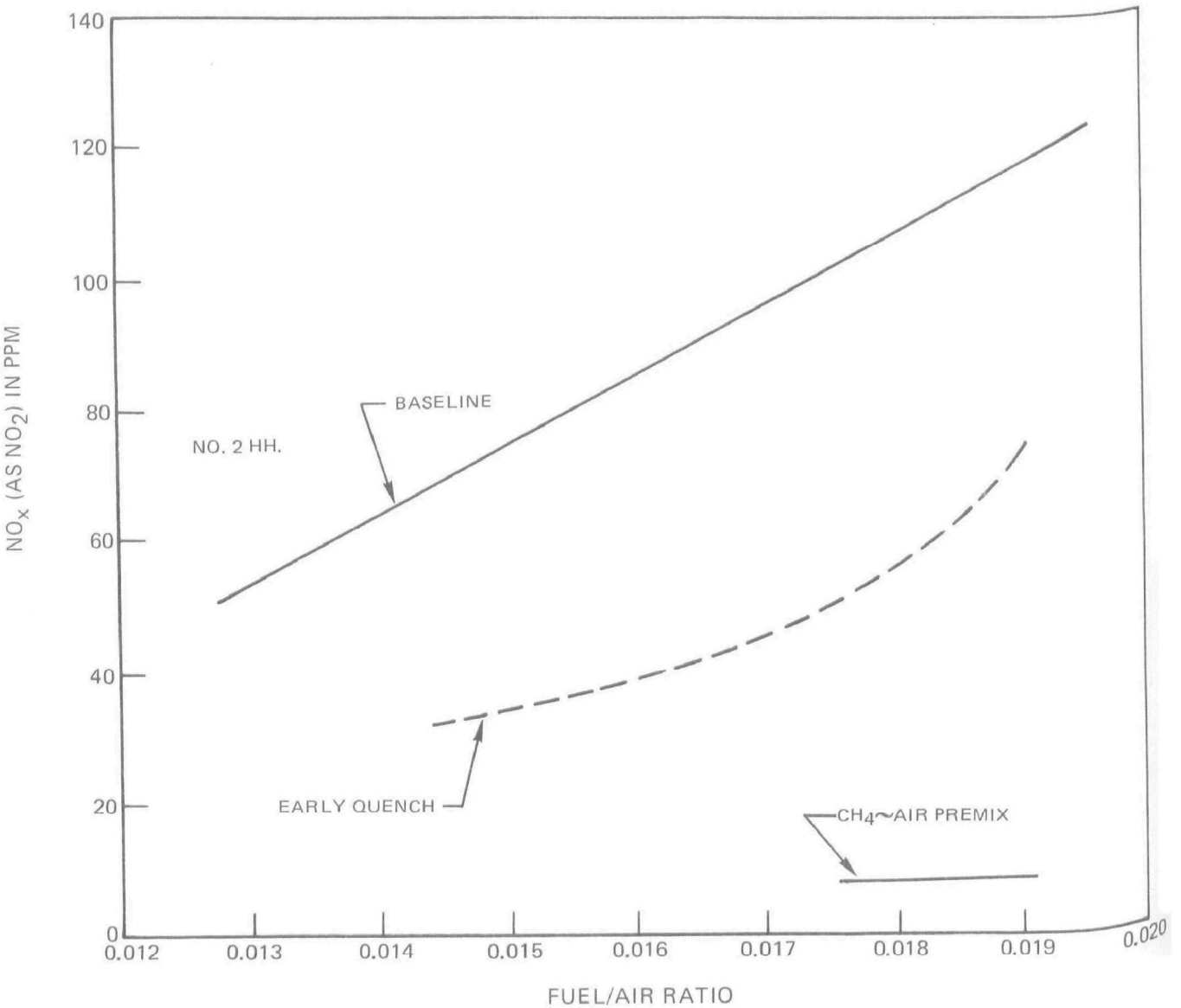

The effects of both residence time and equivalence ratio are shown in Figure 9-13 based on the Zeldovich mechanism. As stated earlier, it is a close approximation only near $\phi = 1.0$ (0.8 to 1.2). However, for preliminary design purposes it is considered to be adequate. While it would be feasible to design a conventional diffusion flame burner, studies at United Technologies (Reference 9-25) have shown that $NO_x$ control would severely constrain design parameters and compromise other desirable combustion performance characteristics.

Premix Concept Design Considerations--

If the gaseous fuel can be thoroughly mixed with the combustion air on a molecular level prior to combustion, the flame temperature will correspond to that appropriate to the mixture bulk equivalence ratio. In addition, since the mixing is achieved external to the combustor, mixture residence time in the flame zone can be reduced. These two factors enable such a premixed system to take full advantage of the emissions reduction capability shown in Figure 9-13. This is done by operating the primary zone lean with a mean equivalence ratio about 0.8, and reducing the residence time in the primary zone to a minimum.

A preliminary design for a low-Btu gas combustor using this concept was prepared as part of the Department of Energy-sponsored High Temperature Turbine Technology Program (HTTTP) conducted by the Power Systems Division of United Technologies and UTRC (Reference 9-26). this preliminary design was based on the results of the joint P&WA-Texaco-Montebello test program for the combustion of gasified residual fuel oil in an FT4 combustor.

The concept is illustrated in Figure 9-14. Gaseous fuel is supplied to a manifold formed in the head of the combustor. Passing through and sealed in the manifold is an array of premix tubes about one inch in diameter which are open at their forward end to admit air entering from the diffuser section. Fuel from the manifold is admitted to individual tubes in this array through a number of metering ports arranged at the forward end of each tube in order to maximize the mixing length available. In the premix tube, the entering fuel jets mix with the air flowing through the tubes. This mixing is enhanced by turbulence grids attached to the premix tube inlets. The pressure drop across these grids also serves to inhibit fuel from flowing forwards out of the tube inlets into the air-casings in the event of a disturbance in the smooth supply of air to the premix tubes.

The premixed fuel and air are discharged from the premix tubes into the primary zone where combustion takes place. The downstream portion of the dome is formed into an air manifold for cooling purposes. Cooling air is admitted into the air manifold through ports on its sides. The premix tubes pass completely through the cooling air manifold. Cooling air from the manifold is discharged as a concentric annular jet from small annular gaps in the faceplate around the end of each premix tube. This air curtain so formed also serves as a flashback inhibitor, as will be described below.

# $NO_X$ ESTIMATION FOR PREMIXED COMBUSTION BASED ON EXTENDED ZELDOVICH MECHANISM

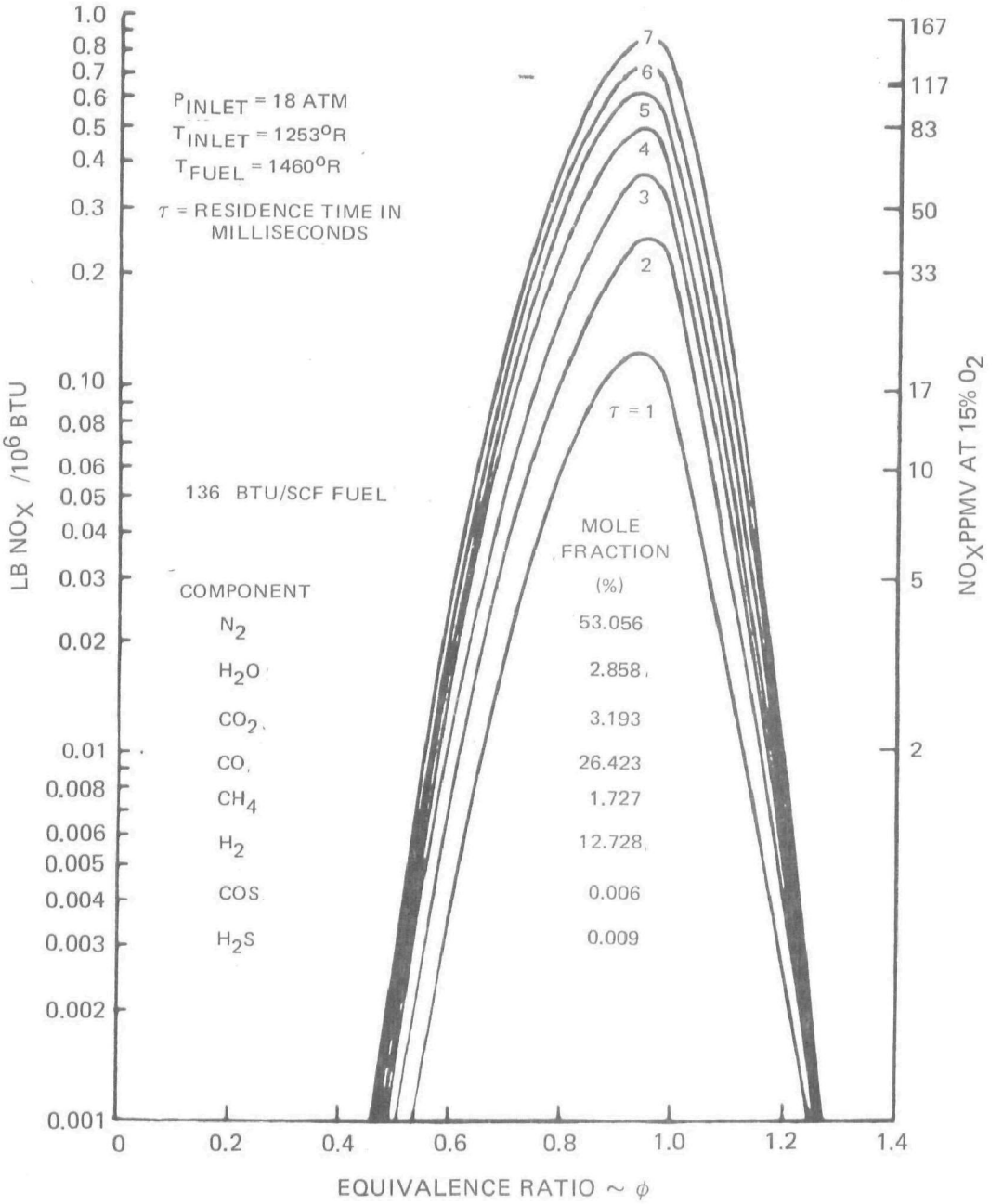

## SCHEMATIC OF PREMIX CONCEPT APPLIED TO A COMBUSTOR DOME

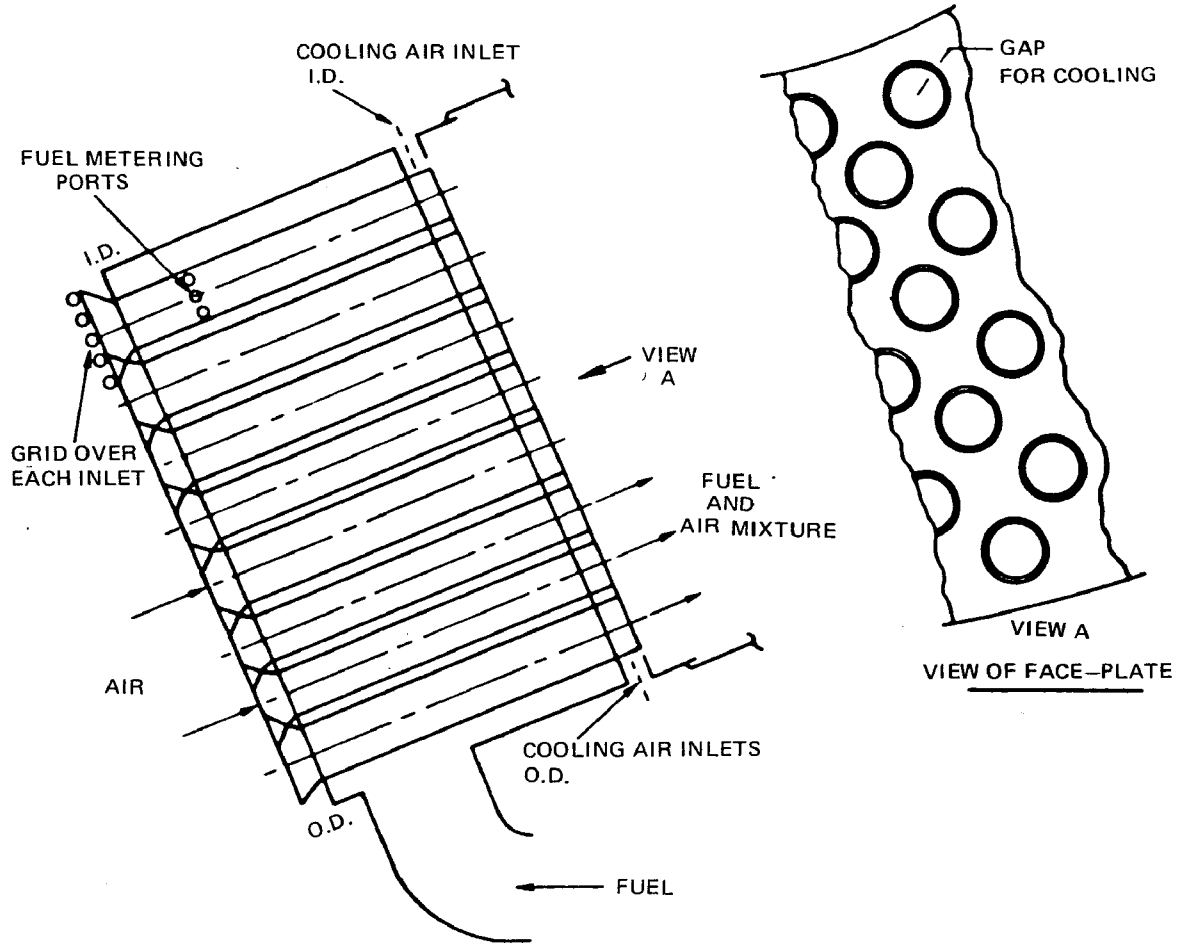


FIG. 9–14

Further cooling air for the faceplate itself is discharged into the primary zone from the manifold through many "transpiration" cooling holes in the faceplate.

Figure 9-15 shows a diagrammatic representation of the flame stabilization in the low velocity regions of the jets of the premix concept. Again, this is a simplified diagram and does not attempt to show the additional flameholding which takes place in the recirculation zones on the faceplate between individual jets. The path length for fuel consumption is indicated. It will depend upon mixing tube diameter and rate of spread of the jet.

Autoignition--All premixed combustion devices are susceptible to a degree of risk from the dual hazards of autoignition and flashback. Autoignition, as strictly defined, is the temperature at which a fuel and oxidant mixture will spontaneously ignite when kept for an infinite residence time. When applied to flowing systems, it occurs when the residence time exceeds the ignition delay of the mixture. Flashback occurs when the flow velocity of the arriving combustible fuel and air mixture at some point in a flowing system becomes smaller than the burning velocity, and an external combustion wave is then able to propagate against the mixture stream into the supply duct. Both hazards, either occurring separately or together, can result in destructive burning in the supply duct, which might lead to secondary failures in the combustor and downstream components.

Using the collected data shown in Figure 9-16, the possibility of autoignition in the HTTTP-type design was evaluated. Provided there is not significant heat transfer to the mixture in the premix tubes, it was concluded that autoignition should not be a problem. Such heat transfer is not likely with careful design. However, Figure 9-16 shows the definite limitations imposed on heat transfer and fuel temperature by autoignition.

Flashback--Flashback is usually encountered in boundary layer and wake regions of a flow where local low velocities exist. It is usual to relate flashback to the boundary layer through a critical boundary velocity gradient. For turbulent pipe flow, the velocity gradient is given (Reference 9-27) by:

$$\frac{dU}{dy} = \frac{0.023\ \rho^{0.8}\ U^{1.8}}{(2R)^{0.2}\ \mu^{0.8}} \qquad (9\text{-}7)$$

where:

R = tube radius

U = mean velocity of mixture flow through tube

## DIAGRAMMATIC REPRESENTATION OF PREMIX COMBUSTOR

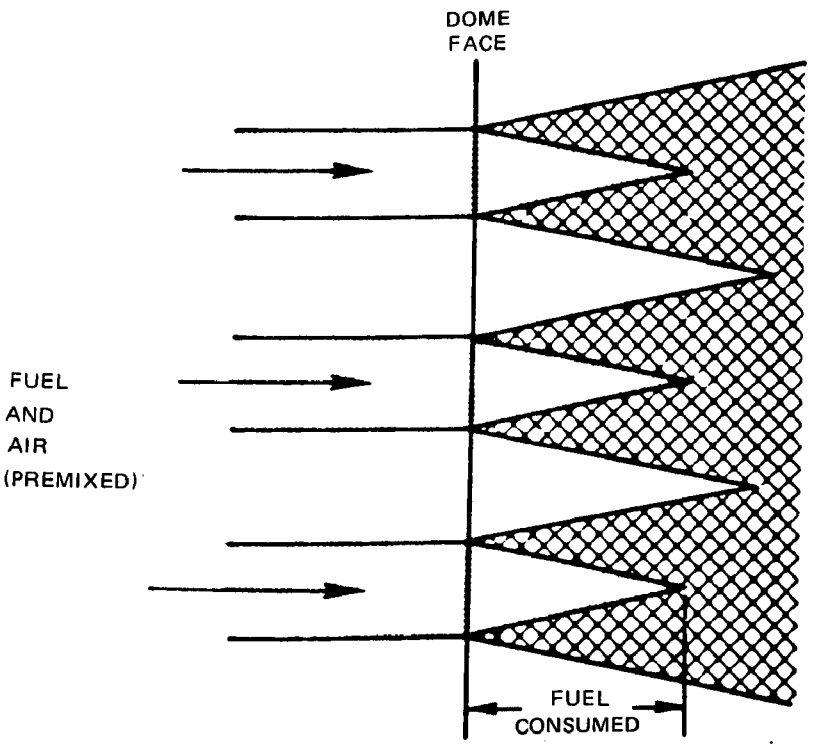

# AUTOIGNITION CHARACTERISTICS–RESIDENCE TIME IN THE PRESSURE TUBE DUE TO LOCAL FLOW RECIRCULATIONS IS NOT LIKELY TO CAUSE A PROBLEM

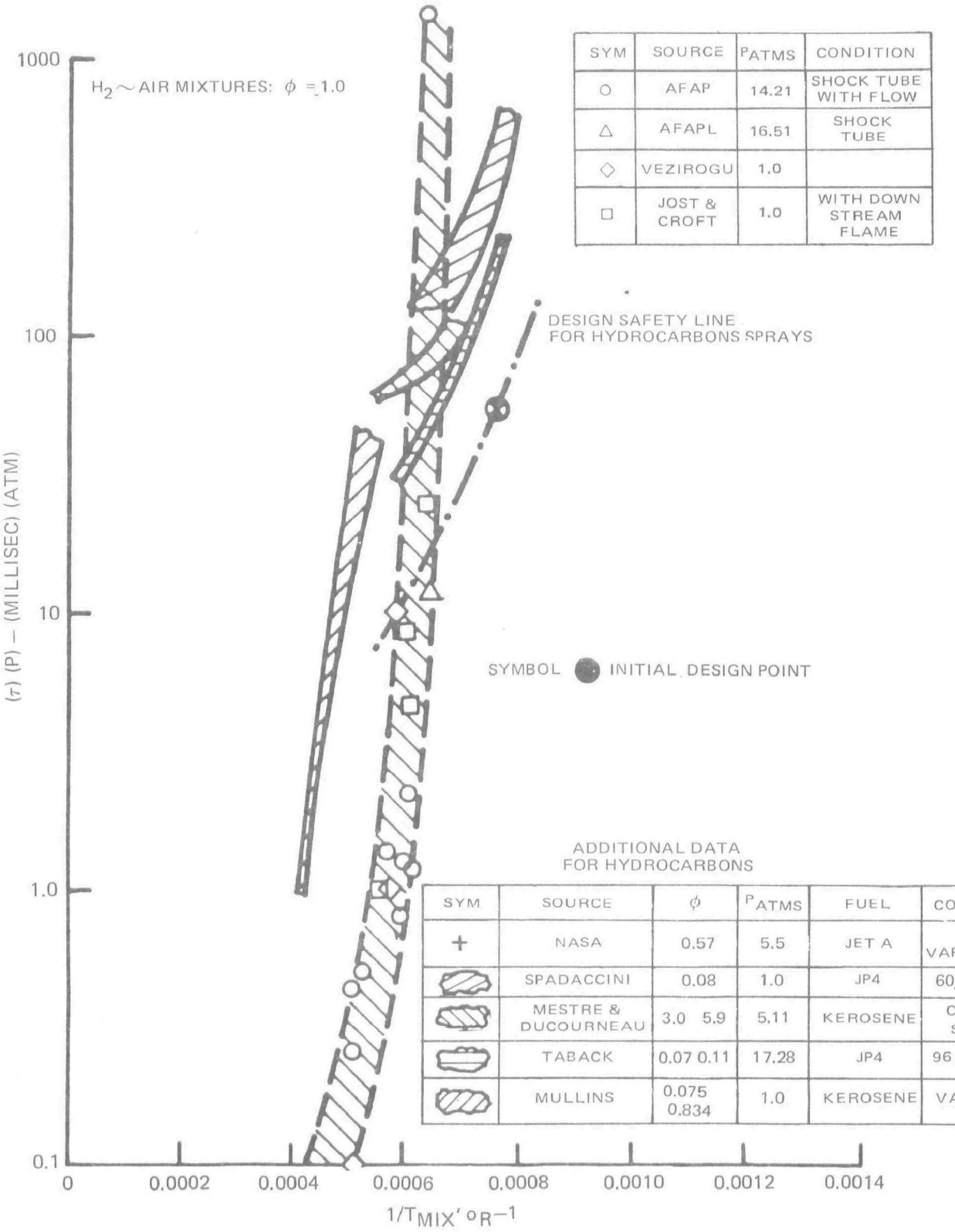


| SYM | SOURCE | $P_{ATMS}$ | CONDITION |
|---|---|---|---|
| ○ | AFAP | 14.21 | SHOCK TUBE WITH FLOW |
| △ | AFAPL | 16.51 | SHOCK TUBE |
| ◇ | VEZIROGU | 1.0 | |
| □ | JOST & CROFT | 1.0 | WITH DOWN STREAM FLAME |

| SYM | SOURCE | $\phi$ | $P_{ATMS}$ | FUEL | CONDITION |
|---|---|---|---|---|---|
| + | NASA | 0.57 | 5.5 | JET A | PRE-VAPORIZED |
| | SPADACCINI | 0.08 | 1.0 | JP4 | 60$\mu$ SPRAY |
| | MESTRE & DUCOURNEAU | 3.0 5.9 | 5.11 | KEROSENE | COARSE SPRAY |
| | TABACK | 0.07 0.11 | 17.28 | JP4 | 96 $\mu$ SPRAY |
| | MULLINS | 0.075 0.834 | 1.0 | KEROSENE | VAPORIZED |

The value of dU/dy, at which flashback takes place is termed $g_{crit}$ and is plotted against mixture bulk equivalence ratio to form a closed loop within which flashback takes place. Since burning velocity is a function of temperature and pressure, a series of such loops exists for a given fuel according to the test conditions.

Figure 9-17 presents estimated flashback loops for the preliminary design burner and for the premix Montebello testing (Reference 9-28). Also shown is the operating range of critical velocity gradient for the Montebello tests. For convenience they are shown at a single bulk value of hydrogen in the fuel, although in reality the bulk value varied. The operating range is to the left of and outside the flashback loops.

The Montebello testing could have been subject to incipient flashback since the operating range overlaps the estimated flashback loops in critical velocity gradient. Poor mixing in the premix tubes could result in hydrogen excursions from the bulk values across into the loop areas. Visual inspection of the Montebello test hardware suggests that such incipient flashback may have taken place and provides a degree of confidence in the validity of the loops. Also, the method of estimating flashback loops apears to be a reasonable one for preliminary design purposes.

Also shown in Figure 9-17 is the operating point of the preliminary design burner. As indicated, it falls well outside the area of concern and gives a reasonable degree of confidence in the feasibility of the premix concept.

Staging--Premixed combustion systems have inherent limitations on the range of fuel-air ratios over which they operate. If the premixing is anywhere near complete, the mixture will burn at the bulk fuel-air ratio and not over a range of fuel-air ratios as with other systems. This means that combustion is not possible outside the bulk flammability limits of the mixture.

The proposed combustor is also different from most gas-turbine combustors in the manner in which the flame is stabilized. Most conventional combustors stabilize the flame front aerodynamically by means of swirling air and opposed air jets strategically placed to create rotating toroidal vortices into which the separate fuel supply is introduced. In the present case, the well-mixed fuel and total combustion air are introduced in the combustor as a large number of individual, unswirled jets containing all the reactants.

To hold the flame stable in such a system, it is necessary to use a mechanical flameholder which creates the necessary aerodynamic blockage. The requirements for such a flameholder are: it must provide stable combustion over the operating extremes expected in service; in conjunction with the remainder of the combustor, it must give good combustion efficiency at idle conditions; and it must achieve the above requirements without excessively long residence times which increase $NO_x$ emissions.

ESTIMATED FLASHBACK LOOP–ESTIMATED FLASHBACK CHARACTERISTICS FOR THE PREMIX TUBE COMBUSTOR AND MONTEBELLO TEST ARE SHOWN

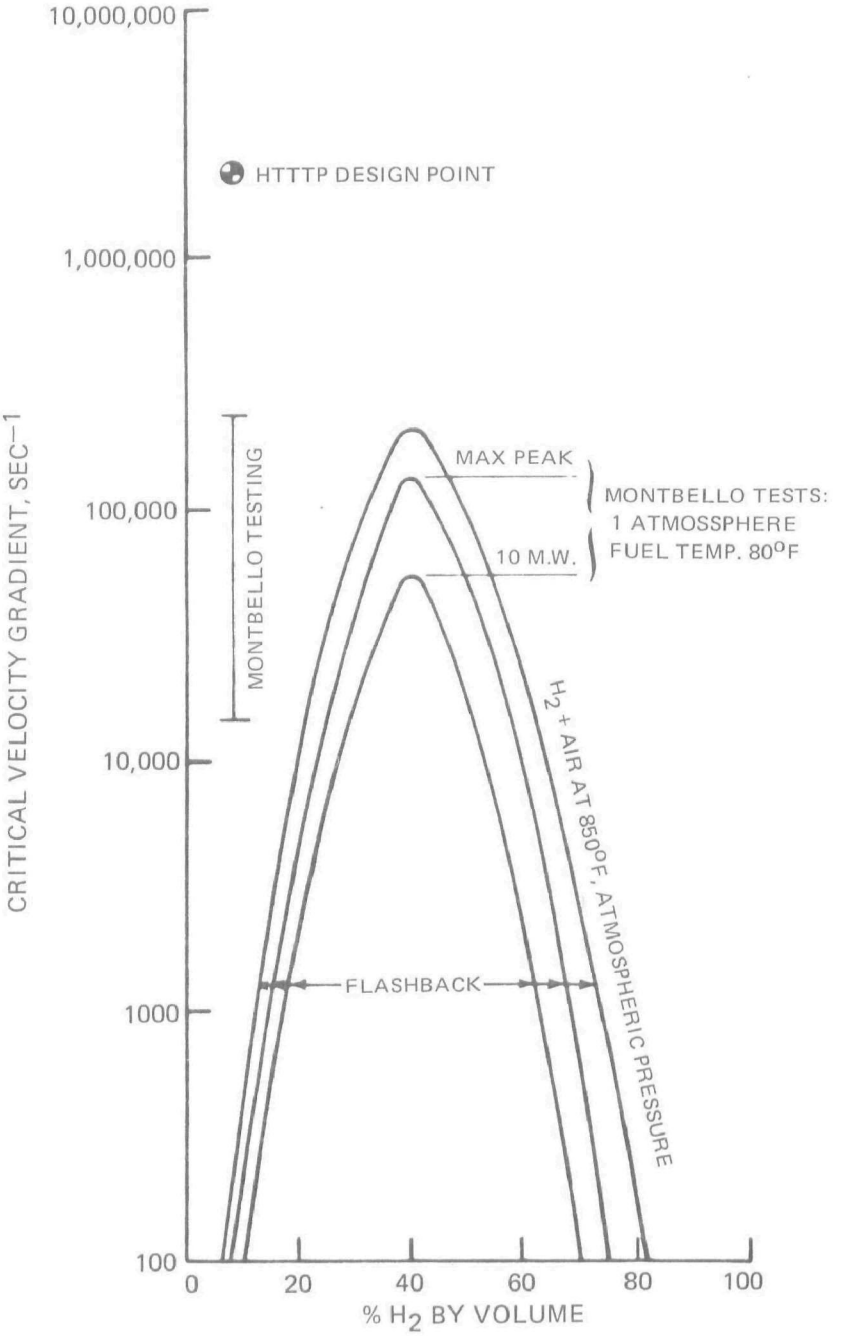

The type of dome design being considered provides aerodynamic blockage for flame stability through the faceplate material between individual premix tubes. Thus, the dome acts rather like a perforated plate flameholder, such as that described by Jamieson (Reference 9-29). The initial reactions on such flameholders take place in the multitude of little recirculation zones created between the individual mixture jets, and only later spread across the jets. These zones were not shown in Figure 9-15 for simplicity.

The stability characteristic must be defined for such flameholder when operating with low-Btu gas. The stability characteristic consists of a correlation of aerodynamic and geometric parameters of the flameholder, plotted against the mixture equivalence ratio so as to form a closed loop within which stable combustion is possible. United Technologies Corporation has demonstrated good success with premixed hydrocarbon/air flameholders using the Marquardt stability parameter (Reference 9-30), and it has been used again here. It is defined as:

$$\text{Stability Parameter} = \frac{V}{d} \cdot \frac{d}{d_e} \cdot \frac{P_o}{P} \left(\frac{1000}{T_o}\right)^{1.5} \times 10^{-3} \qquad (9\text{-}8)$$

where, $V$ = velocity of flow at flameholder

$\frac{de}{d}$ = effective dimension ratio, ($\equiv$ 1.6 for disks)

$d$ = baffle dimension

$P_o$ = reference pressure ($\equiv$ 1 atmos.)

$P$ = static pressure in flow

$T_o$ = mixture total temperature

For stable combustor operation it is necessary to always operate within the loops shown in Figure 9-18. These loops are much narrower than are those for more conventional gas turbine combustors which do not use premixing. The loops for premixed systems are usually not wide enough to satisfy most operating requirements. The design point mean equivalence ratio was selected as 0.78 on the basis of satisfying $NO_x$ emissions requirements. This point is shown on Figure 9-18 inside the loop.

Once this point was decided, a totally fixed geometry system is forced to work along a smooth, continuous operating line which will eventually cross the lean limit of the stability loop at some part-power condition, causing a lean blowout of the combustor. To prevent lean blowout, it is necessary to use a variable geometry system. By making this part of the fuel system, it is possible to have the moving parts external to the engine flowpath. Variability of the fuel system is to be achieved by fueling the premix dome in discrete zones such that the functioning zone equivalence ratio is always kept inside the stability loop.

CALCULATED STABILITY LOOP FOR PREMIXED CONCEPT AS APPLIED TO AN ANNULAR COMBUSTOR WITH 2600°F CET

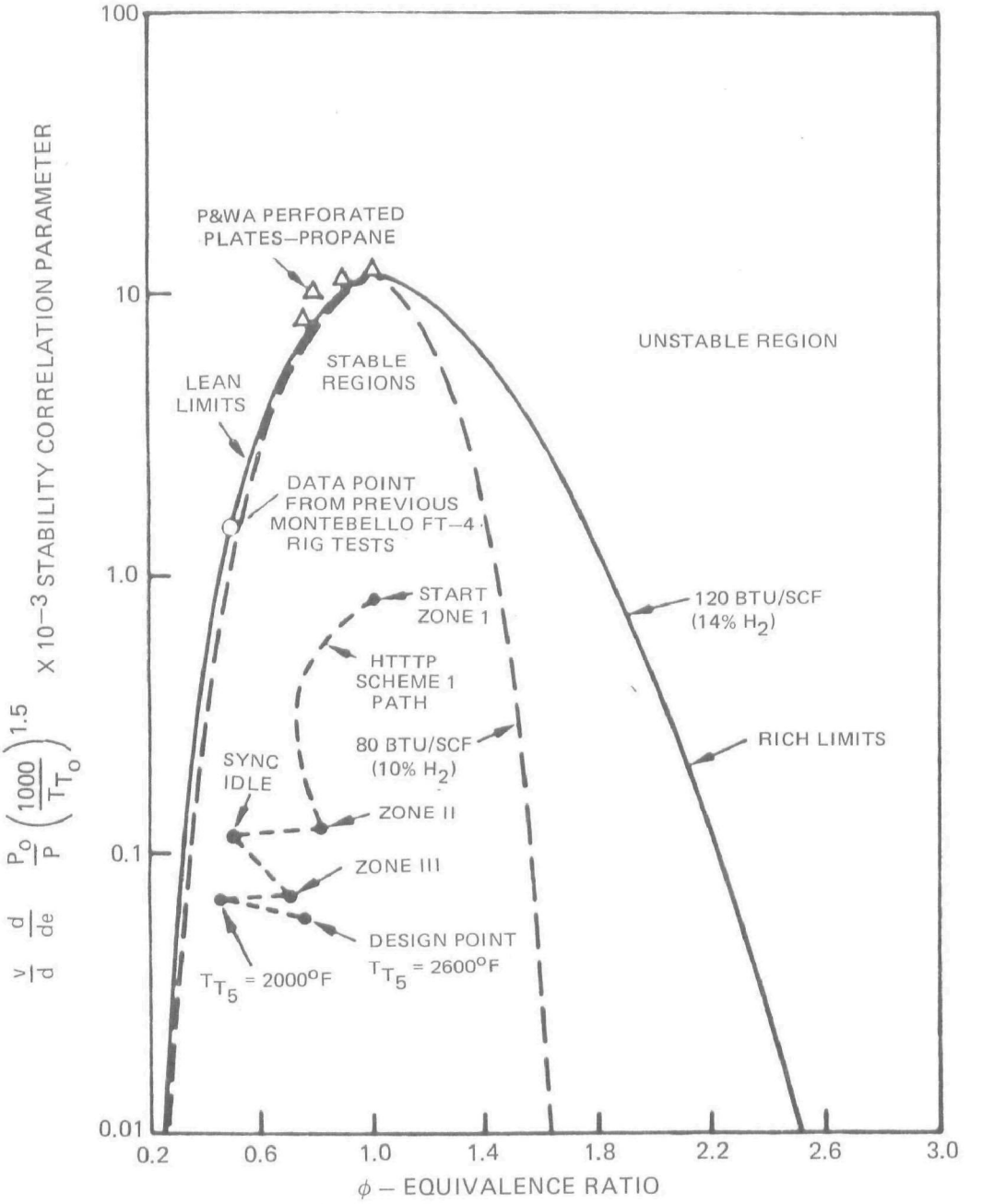

Figure 9-18, by way of illustration, displays the operating line for which a three-zone premix was done. At the design point all three zones are in operation. As power is reduced by reducing the fuel flow, the lean limit is approached until Zone III is shut down; and the total fuel flow at that point goes through Zones I and II only. This increases the equivalence ratio of these zones and moves the operating characteristic away from the lean limit. Further reduction in power causes the lean limit to be approached again until Zone II is shut down. This occurs just below synchronous idle speed. Start-up of the gas turbine is accomplished on Zone I at an equivalence ratio of unity for ease of starting. Zoning is achieved through means of internal baffling in the fuel manifold surrounding the premix tubes in the dome of the combustor.

Fuel Bound $NO_x$

While low-temperature cleanup systems achieve virtually complete removal of nitrogen compounds, possibly the most serious shortcoming of high-temperature cleanup systems is their inability to remove fuel-bound nitrogen. In conventional combustors with stoichiometric air or greater than stoichiometric air, almost all ammonia (at low, < 1% concentrations) has been shown to be converted to NO (Reference 9-11). Unless reliable and economical means can be developed to modify fuel composition in the gasifier, remove ammonia at high temperature or decompose it to nitrogen in the combustor, the viability of high-temperature cleanup is questionable.

Fortunately, with the support of the EPA, combustion methods have been demonstrated that would greatly reduce the amount of NO formed as a result of ammonia in the fuel gas. While it would be desirable to evaluate the merits of various methods of fuel bound $NO_x$ control on a system level, such a study was outside the scope of this contract, but is recommended for further study.

Two rather similar schemes for reduction of fuel-bound $NO_x$ are of interest. The first, reported in Reference 9-31 would utilize fuel rich combustion with long residence times to decompose the undesirable species. The effect of residence time and equivalence ratio is shown in Figure 9-19 and the conceptual design of the combustor in Figure 9-20. The secondary air would be added in a rapid mixing zone to minimize formation of thermal $NO_x$. Because of the long residence time, burner design would be nonconventional and quite large as compared to current designs. While such a burner could prove costly when used in integrated systems such as proposed here, a combined burner-pressurized boiler could be an interesting alternative.

A variation of the above concept, being studied under EPA Contract No. 68-02-2136 at the Pratt & Whitney Aircraft Division of UTC, would result in a more conventional size burner. The concept (Reference 9-32) also uses a rich burn followed by a very short residence time in the first zone. Results of that work are shown in Figure 9-21. If all nitrogen in that fuel were to appear in the stack as NO, its concentration would be 191 ppm.

## RESIDUAL NITROGEN SPECIES AS A FUNCTION OF EQUIVALENCE RATIO AND RESIDENCE TIME

$NH_3^o$ = 4000 PPM IN FUEL

$T_{FUEL}$ = 18 1088K

$T_{AIR}$ = 810K

PRESSURE = 10 ATM

RESIDUAL NITROGEN SPECIES = Σ (NO, $NH_3$ AND HCN)

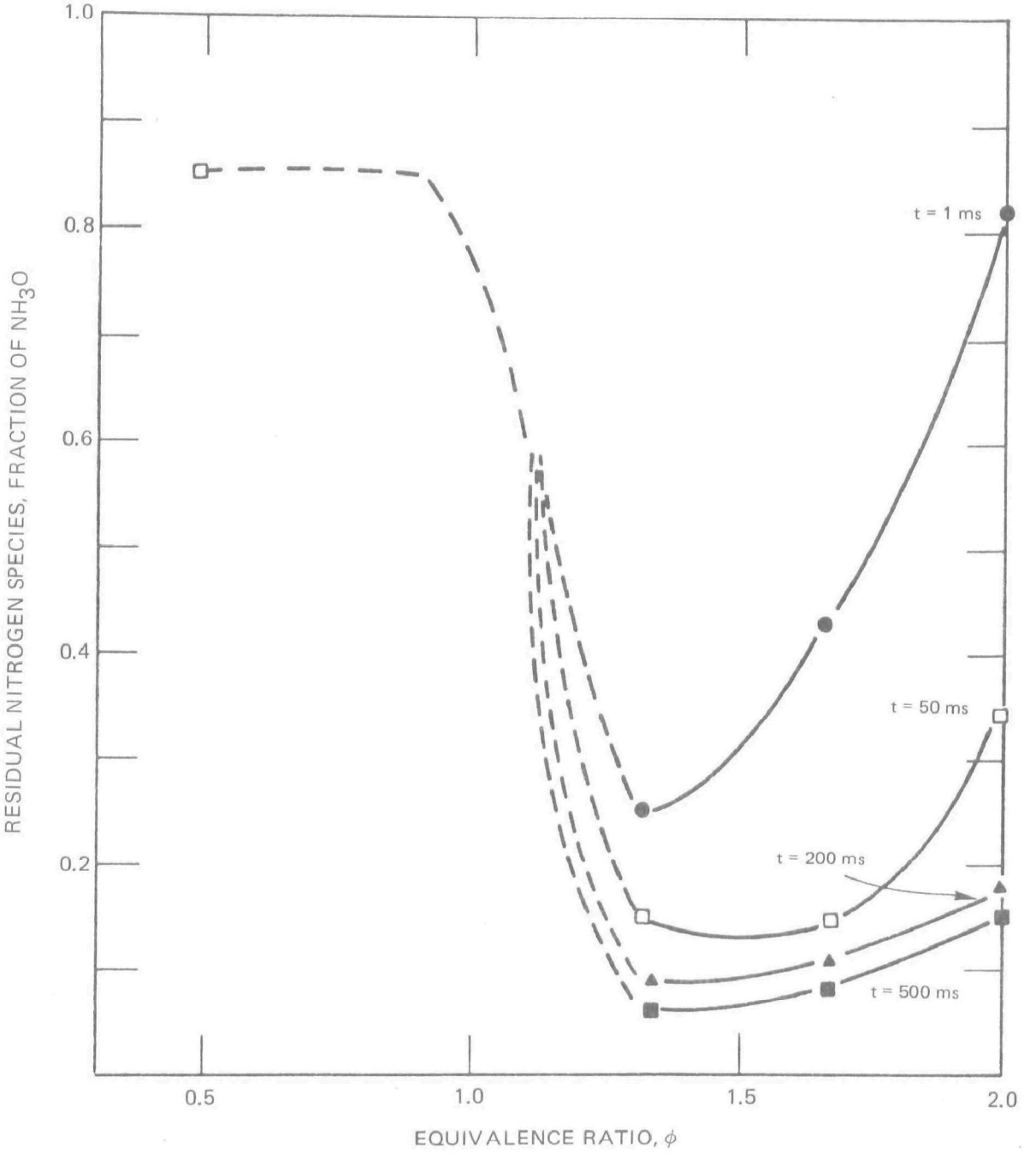

## OPTIMIZATION OF THE INITIAL DESIGN CONCEPT

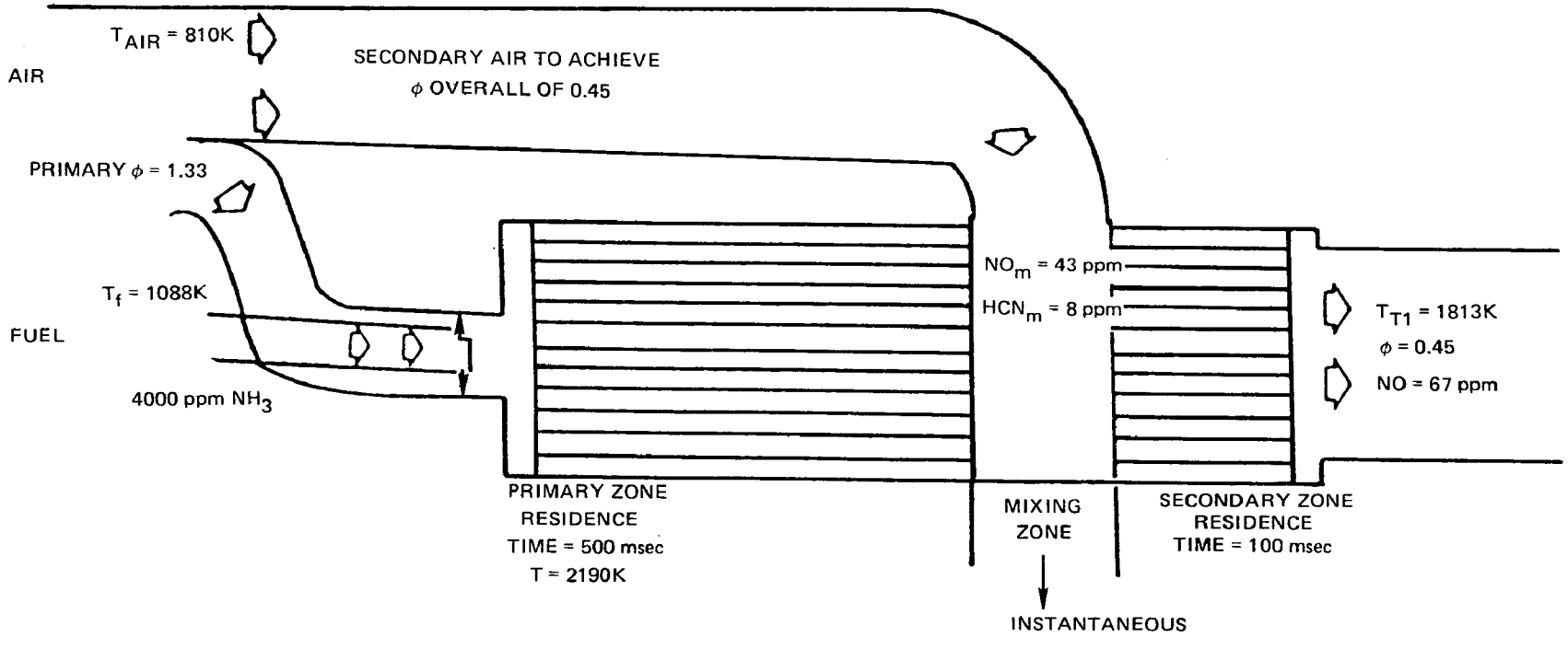


NOTE: $NO_m$ AND $HCN_m$ INCLUDE SECONDARY DILUTION EFFECT

FIG. 9–20



78–02–157–1

## RICH BURNER STAGING CHARACTERISTICS

RICH BURN/QUICK QUENCH CANCEPT

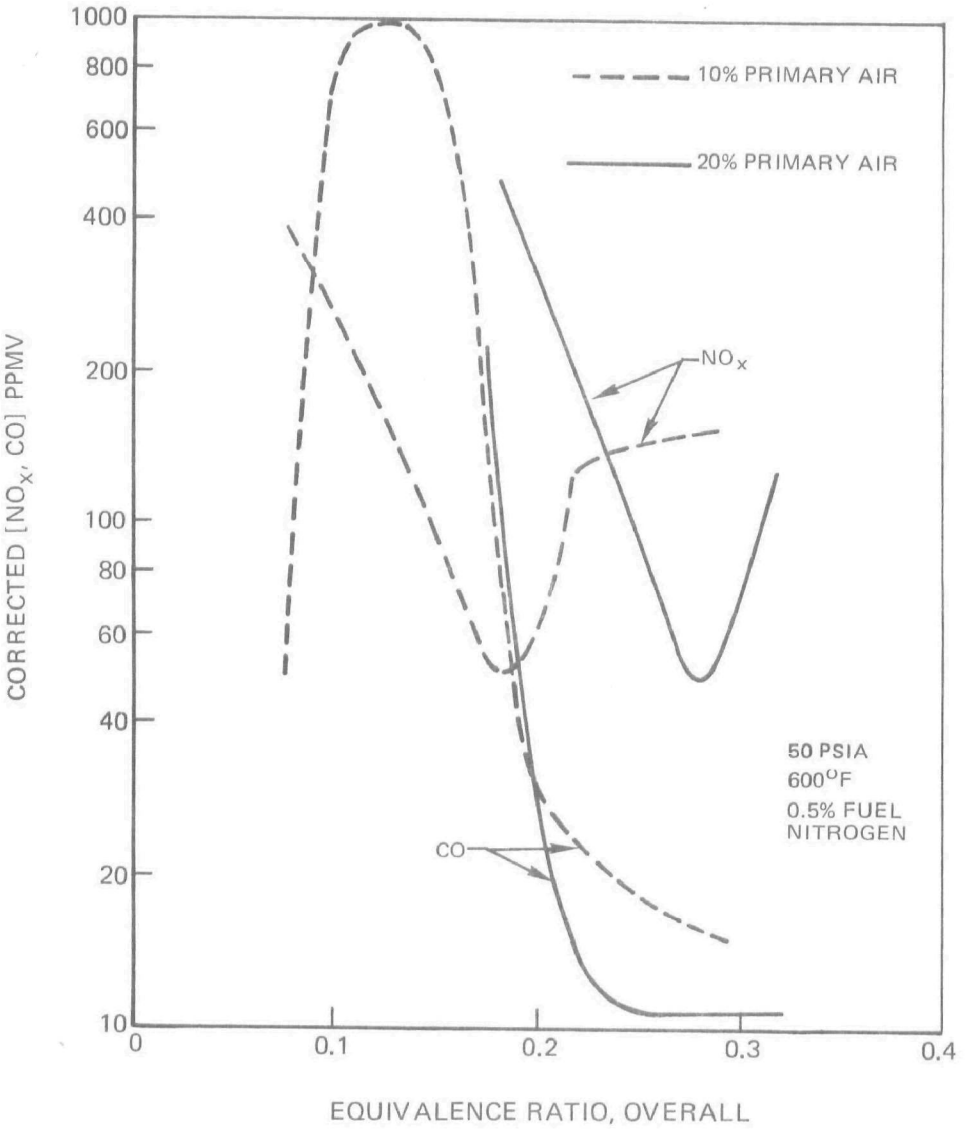

Thus, the observed reduction to 50 ppm is significant. Also, for the case with 20% primary air, CO emission levels are quite low. Apparently it is possible to move the position of minimum NO formation while maintaining a relatively constant CO characteristic.

PARTICULATES

The effluent from each gasifier will contain varying amounts of entrained particulate matter. To date, no quantitative assessment has been made of particulate loadings in gases produced by the specified coal gasification processes. The Koppers-Totzek gasifier effluent has been characterized as having an entrained particulate concentration of 11.57 gr/scf (Reference 9-33). Westinghouse has prepared a quantitative approximation of raw gas particulate loading and size distribution for fluidized bed gasification. The projection is based on fluidized bed combustion and a theoretical model developed by Kunii and Levenspiel (References 9-33, 9-34). The Westinghouse projections and the particulate loads estimated for the gasifiers studied here are shown in Table 9-8. The molten salt bed Kellogg gasifier removes particulates before they exit the gasifier. For this reason a lower particulate loading, nearly all entrained sodium salts, is expected.

A summary of removal system performance developed by Westinghouse (Reference 9-34) is shown in Figure 9-22. Since the gas turbine is believed to be tolerant to particles of less than 2 micron diameter, the venturi type scrubber appears ideally suited for this duty. It is also apparent that those concepts amenable to high-temperature operation have significantly reduced removal capabilities in the size range of interest.

For the high-temperature systems studies here, use of a granular bed filter was assumed. Particulate removal down to .01 to .02 grain/SCF is estimated (Reference 9-35). Other candidates include a woven metal cloth manufactured by the Brunswick Corporation and the panel bed sand filter being developed at City College, New York (References 9-36, 9-37, and 9-38). Performance of the panel bed filter is reported to be as high as 99.99% with no particles larger than 5 micron penetrating the filter. For the purposes of this study, it is important that a representative cost for particulate removal be used. Data obtained from References 9-35 , 9-38 and 9-39 all show installed costs for the various concepts to be in the range of $80 to $100 per actual CFM for units of the size used here.

TABLE 9-8

PARTICULATE LOADING IN GASIFIER PRODUCT GASES

| Process Configuration | Projected Dust Load | Particle Size Distribution |
|---|---|---|
| Westinghouse (Estimate for Fluidized-Bed Gasification) | 10 to 30 gr/SCF | 10 to 25% < 10 μ<br>5 to 15% < 5 μ |
| BCR-Air (Entrained Bed) | 15 to 45 gr/SCF | 15 to 35% < 10 μ<br>10 to 20% < 5 μ |
| BCR-Oxygen (Entrained Bed) | 15 to 45 gr/SCF | 15 to 35% < 10 μ<br>10 to 20% < 5 μ |
| IGT-Air (Fluidized Bed) | 5 to 25 gr/SCF | 10 to 25% < 10 μ<br>5 to 15% < 5 μ |
| Kellogg-Air (Molten Bed) | 0.1 to 1 gr/SCF | 10 to 30% < 10 μ<br>5 to 20% < 5 μ |

## EXTRAPOLATED FRACTIONAL EFFICIENCY OF PARTICULATE REMOVAL DEVICE

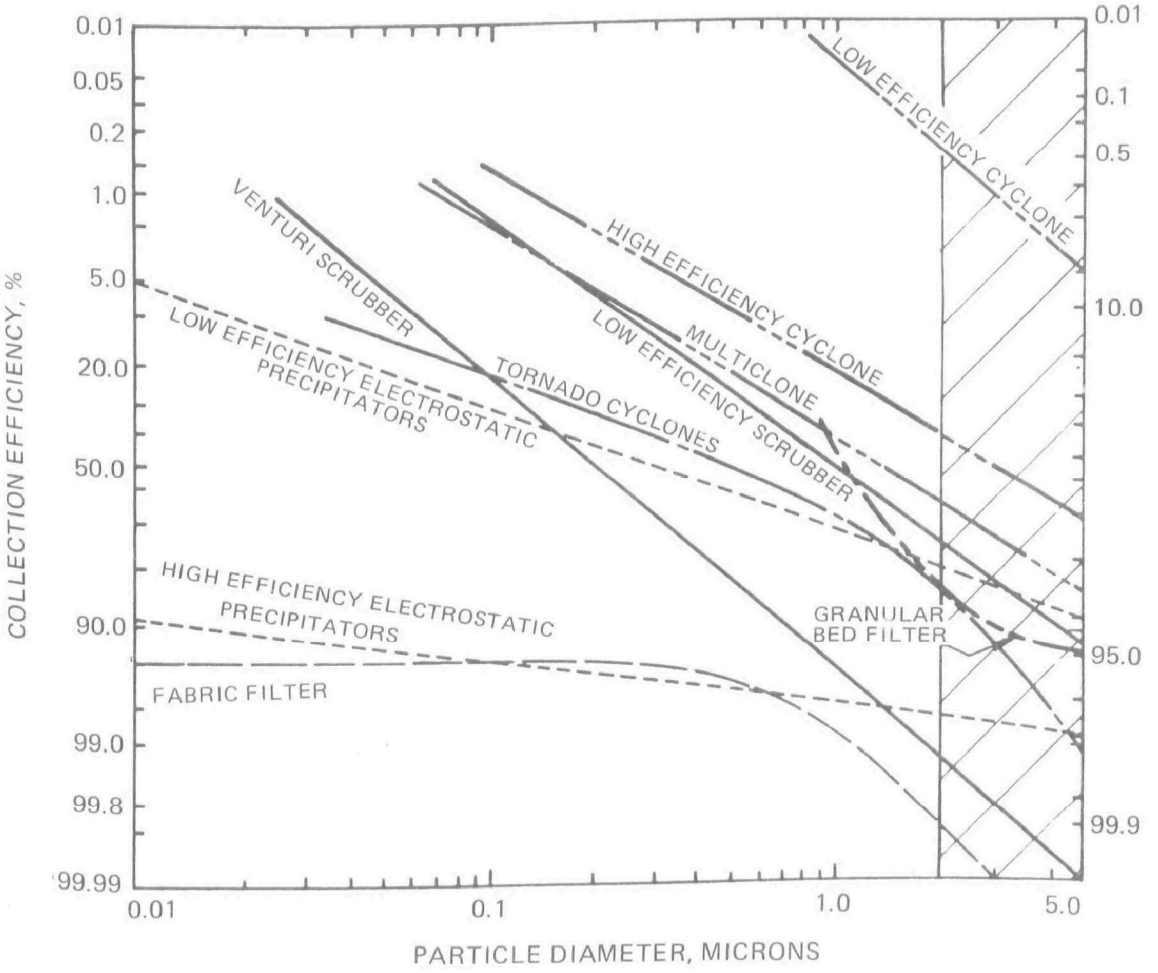


78–02–157–6

## REFERENCES


9-1 Federal Registor, Monday, October 3, 1977, Part III. EPA-Stationary Gas Turbines - Standards of Performance for New Stationary Sources.

9-2 Hagard, H. R. and F. D. Buckley. Experimental Combustion of Pulverized Coal at Atmospheric and Elevated Pressure. Trans. ASME, Vol. 70, p. 729 (1948).

9-3 Smith, J., et al. Bureau of Mines Progress in Developing Open and Closed-Cycle Coal Burning Gas Turbine Power Plants. J. Eng. Power, Vol. 38, No. 4, October 1966.

9-4 McGee, J., Coal-Fired Gas Turbines, Mech. Eng., Vol. 81, May 1959.

9-5 Robson, F. L., et al. Analysis of Jet Engine Test Cell Pollution Abatement Methods. Technical Report No. USAF AFWL-TR-71-18, May 1973.

9-6 Hoy, H. R. and H. G. Roberts. Fluidized Combustion of Coal at High Pressure AIChE Symposium Series, Air Pollution and Its Control, 68, No. 12, 1972.

9-7 The Coal Burning Gas Turbine Project, Report of Interdepartmental Steering Committee, Department of Minerals and Energy, Department of Supply. (Commonwealth of Australia), (1973).

9-8 Dust Erosion Parameters for Gas Turbines. Petro/Chemical Engineering. December 1962.

9-9 Talbert, W. M., et al. High Temperature Turbine Technology Program Power Plant Study and Design. Pullman Kellogg Report No. RED-77-1333, Feb. 1977.

9-10 Field, J. H., et al. Pilot Plant Studies of the Hot-Carbonate Process for Removing Carbon Dioxide and Hydrogen Sulfide. Bureau of Mines Bulletin 597, 1962.

9-11 Wendt, J. I. L. and C. V. Sternling. Effect of Ammonia in Gaseous Fuels on Nitrogen Oxide Emissions. Journal of the Air Pollution Control Association, Vol. 24, No. 11, November 1974, pp. 1055-1058.

9-12 Crouch, W. B. and R. D. Klapatch. Solids Gasification for Gas Turbine Fuels, 100 and 300 Btu Gas. Intersociety Energy Conversion Engineering Conference. Paper 709034, September 1976.

9-13 Giramonti, A. J. Advanced Power Cycles for Connecticut Electric Utility Stations. UTRC Report L-971091-2, January 1972.

9-14 Roberts, R., L. D. Aceto, R. Kollrach, D. P. Teixeria, and J. M. Bonnell: An Analytical Model for Nitric Oxide Formation in a Gas Turbine Combustor. AIAA Journal, Vol. 10, No. 6, June 1972.

9-15 Mador, R. J. and R. Roberts: A Pollutant Emission Prediction Model for Gas Turbine Combustor. Paper presented at 10th Annual AIAA/SAE Propulsion Conference, San Diego, October 21-23, 1974.

9-16 Moiser, S. A. and R. Roberts. Low-Power Turbo Propulsion Combustor Exhaust Emissions. Vol. 1, Theoretical Formulation Design and Assessment. AFAPL-TR-73-36, June 1973.

9-17 Moiser, S. A. and R. Roberts: Low-Power Turbo Propulsion Combustor Exhaust Emissions, Vol. 2, Demonstration and Total Emission Analysis and Prediction. USAF AFAPL-TR-73-36, April 1974.

9-18 Moiser, S. A. and R. Roberts. Low-Power Turbo Propulsion Combustor Exhaust Emissions, Vol. 3, Analysis. USAF AFAPL-TR-73-36, July 1974.

9-19 Moiser, S. A., R. Roberts and R. Henderson: Development and Verification of an Analytical Model for Predicting Emissions from Gas Turbine Engine Combustors During Low-Power Operation, NATO AGARD-CP-125, April 1973.

9-20 Marteney, P. J.: Analytical Study of the Kinetics of Formation of Nitrogen Oxide in Hydrocarbon-Air Combustion. Combustion Science and Technology, Vol. 1, pp. 461-469, 1970.

9-21 Zeldovich, J.: The Oxidation of Nitrogen in Combustion and Explosives. Acta Physiochmica, U.S.S.R., Vol. 21, 1946.

9-22 Fenimore, C. P.: Formation of Nitrix Oxide in Premixed Hydrocarbon Flames. 13th International Symposium on Combustion, Salt Lake City, 1970.

9-23 Shaw, H.: Fuel Modification for Abatement of Aircraft Turbine Engine Oxides of Nitrogen Emissions. NTIS Report No. AD752581, October 1972.

9-24 Westenberg, A. A.: Kinetics of NO and CO in Lean Premixed Hydrocarbon-Air Flames. Combustion Science and Technology, Vol. 4, 1971, pp. 59-64.

9-25 Sarli, V. J.: Variation of NO Formation with Time and Humidity in the Combustion of JP-Fuels. United Aircraft Report No. UAR-L52, 1972.

9-26 Carlson, N. G., et al. Development of High-Temperature Subsystem Technology to a Technology Readiness State, Phase 1 - Final Report, ERDA FE-2292-19, April 1977.

9-27 Lewis, B. and G. VonElbe: Combustion, Flames and Explosion of Gases, Academic Press, 2nd. Edit., 1961, p. 250.

9-28 Madden, T. J., R. H. James and H. R. Schwartz: Evaluation of Gasified Residual Fuel Oil and Coal in a Low Pressure Single Segment Gas Turbine Burner Rig - Phase III Final Report, Pratt & Whitney Aircraft Report No. PWA-5249, March 1975.

9-29 Jamieson, J. B.: Premixed Primary Zone Studies Using a Multiple-Port Baffle, Proc. Cranfield Intl. Symposium Series, Vol. II - Combustion & Heat Transfer in Gas Turbine Systems, Edit. E. R. Norster, Pergamon Press, 1971, pp. 123-144.

9-30 The Marquardt Company, Technical Report AFAPL-TR-70-81, January 1971.

9-31 Martin, G. B.: $NO_x$ Consideration in Alternate Fuel Combustion. EPA-600/2-76-149, (NTIS No. PB257-182), Symposium Proceedings: Environmental Aspects of F Conversion Technology II, December 1975, Hollywood, Florida.

9-32 Mosier, S. A. and R. M. Pierce: Advanced Combustion System for Stationary Gas Turbine Engines. Second Symposium on Stationary Source Combustion, New Orleans, August 1977.

9-33 Advanced Coal Gasification System for Electric Power Generation, Annual Technical Report for August 9, 1972-June 30, 1973. Submitted to Office of Coal Research by Westinghouse Electric Corporating, Lester, PA, 1973.

9-34 Clean Power Generation from Coal. Final Report by Westinghouse Electric Corp. Research and Development Center, April 1974, PB 234188.

9-35 Private Communication, Combustion Power Co., May, 1977.

9-36 Squires, A. M. and R. Pfeffer: Panel Bed Filters for Simultaneous Removal of Fly Ash and $SO_2$. Journal of Air Pollution Control Assn. (20), No. 8, August 1970.

9-37 Lee, K. C., et al.: The Panel Bed Filter. EPRI AF-560, May 1977.

9-38 Jones, C. H. and J. M. Donohue: Comparative Evaluation of High and Low Temperature Gas Cleaning For Coal Gasification - Combined Cycle Power Systems, EPRI AF-416, April 1977.

9-39 Beecher, D. T., et al.: Energy Conversion Alternatives Study Westinghouse Phase II, Final Report. NASA CR-134942, November 1976.

## SECTION 10

## OTHER ENVIRONMENTAL INTRUSIONS

### INTRODUCTION

The previous section has dealt with the major air emissions from the integrated power plant. With the exception of thermal $NO_x$, all the potential pollutants arose because of the nature of the coal feedstock. From the time that the coal enters the plant boundary to the time that solid wastes exit, there is the potential to cause some type of environmental intrusion. Except for some chemicals introduced for water treatment, the original coal feed is the source for all the major air, water, solid waste and minor and trace element emissions.

The organic portion of coal is largely composed of polycyclic aromatic structures and, in addition to carbon and hydrogen, contains significant quantities of organic oxygen, nitrogen, and sulfur, residual biological compounds, and other organic compounds. Functional groupings include methoxyl, hydroxyl, carbonyl, and carboxyl. The form into which organic sulfur and nitrogen combine with other elements or compounds in the coal is not known, but it is presumed to be largely or entirely in heterocyclic aromatic rings. Coal mineral matter contains trace to appreciable quantities of practically all the elements in the periodic table.

The proximate and trace-elements analysis of coals may vary considerably from mine to mine, or even from seam to seam (Reference 10-1). The proximate analysis for coal lists only moisture, volatile matter, fixed carbon, and ash. An ultimate analysis is only slightly more definitive; a complete ultimate analysis for typical Illinois No. 6 coal is listed in Table 10-1 from Reference 10-2. Typical modes of occurrence of trace and minor elements in coal are given in Table 10-2 (Reference 10-3).

A general procedure that considers concentration and toxicity of trace elements is described for choosing those most likely to be of environmental concern. Using that procedure, the trace elements arsenic, beryllium, boron, cadmium, chromium, lead, mercury, nickel and vanadium have been selected for

TABLE 10-1

TYPICAL COMPOSITION OF ILLINOIS NO. 6 COAL

| Proximate Analysis, As Received | Wt-% |
|---|---|
| Moisture | 13.3 |
| Volatile Matter | 33.0 |
| Ash | 8.8 |
| Fixed Carbon | 44.9 |
| Total | 100.0 |
| **Ultimate Analysis, Dry Basis** | |
| Carbon | 70.1 |
| Hydrogen | 4.88 |
| Sulfur | 3.74 |
| Nitrogen | 1.07 |
| Oxygen (by difference) | 10.11 |
| Ash | 10.10 |
| **Minor Elements** | |
| Silicon | 2.0 |
| Iron | 1.4 |
| Calcium | 0.35 |
| Chlorine | 0.23 |
| Potassium | 0.17 |
| Sodium | 0.14 |
| **Trace Elements** | **ppm** |
| Titanium | 700 |
| Magnesium | 570 |
| Boron | 200 |
| Fluorine | 61 |
| Zinc | 49 |
| Manganese | 48 |
| Strontium | 37 |
| Zirconium | 35 |
| Lithium | 33 |
| Barium | 31 |
| Arsenic | 24 |
| Copper | 19 |
| Vanadium | 17 |
| Chromium | 15 |
| Nickel | 1 |
| Selenium | 13 |
| Lead | 11 |
| Tellurium | 8.1 |
| Molybdenum | 7.0 |
| Germanium | 4.3 |
| Cobalt | 3.6 |
| Tin | 2.0 |
| Antimony | 1.1 |
| Bismuth | 1.1 |
| Beryllium | 1.0 |
| Cadmium | 0.89 |
| Samarium | 0.74 |
| Ytterbium | 0.56 |
| Mercury | 0.12 |
| Silver | 0.10 |

*TYPICAL FORM IN WHICH TRACE AND MINOR ELEMENTS OCCUR IN COAL*

| Element | Form | Element | Form |
|---|---|---|---|
| Sb | Sulfide | Mo | Sulfide |
| As | Oxide, sulfide | Ni | Sulfide |
| Ba | Carbonate, sulfate with Ca | N | ORO |
| Be | ORO* | K | KCl, carbonate |
| Bi | Sulfide | Sm | SQ |
| B | ORO, borate | Sc | Oxide |
| Cd | Sulfide | Se | PORO, sulfide, iron selenides |
| Ca | Oxide, carbonate, sulfate | Si | Oxide, SQ |
| Cl | PORO+ sodium chloride | Ag | Element, sulfide, SQ |
| Cr | PORO, oxide | Na | PORO, carbonate |
| Co | PORO, sulfide | Sr | PORO, with Ca |
| Cu | $CuFeS_2$, sulfide | S | PORO, sulfides, sulfates |
| F | $CaF_2$ | Te | Iron tellurides |
| Ge | PORO, carbonate | Th | SQ |
| Fe | Carbonate, sulfide, oxide | Sn | Carbonate, sulfide |
| Pb | Sulfide | Ti | PORO, SQ |
| Li | SQ** | V | PORO |
| Mg | PORO, carbonate, SQ | Yb | SQ |
| Mn | Carbonate in $CaCO_3$, SQ | Zn | Sulfide |
| Hg | PORO, elemental, sulfide | Zr | Oxide, SQ |

* ORO - Organic occurrence

\+ PORO - Partial organic occurrence

** SQ - Silicates, clay, quartz

discussion of their fate in the integrated plant processes. All these elements except boron and vanadium are included on EPA's list of criteria pollutants. Because of the potentially corrosive activity of boron and vanadium salts in the hot section of the gas turbine, these elements have also been selected for further study.

The following presents a general discussion of the sources of pollution in an integrated plant and describes, wherever possible, methods of controlling the air, water or solid waste emissions. The trace elements, in particular those chosen for examples, are also discussed.

## WASTES FROM COAL PREPARATION AND HANDLING

Figure 10-1 is a schematic block diagram of coal handling and preparation facilities. Run-of-mine (ROM) coal will be received from the mine by trucks. The amount of coal stored at a commercial-sized, combined-cycle power plant of 1,000-MW capacity will depend upon the availability of coal from the mine, the location of the plant, and storage space available at the plant. Coal will be received on a continuous basis and stored in an active coal pile. It is a common practice to stockpile enough coal for a three to fifteen weeks supply. This coal will be stored in an inactive pile and will be utilized in case of unusual circumstances, such as unavailability of coal on a continuous basis due to bad weather or other uncontrollable conditions.

### Size Reduction

Coal size reduction is done in stages. Primary crushers, either roll-type or rotary screen-type, are employed to reduce the raw coal to a top size of 3 inches. Coal is reduced further with secondary crushers and screening crushers. Secondary crushers will reduce coal to a top size of from one-and-one-half to one-and-three-fourths inches, screening crushers will reduce coal to a top size of from 3/8 to 1 inch. Different types of crushers are used for coal cleaning; from an environmental point of view, crushers producing lesser amounts of fines are desirable. The commonly used crushers are hammer-mill and ring crushers, single-roll crusher, double-roll crusher, rotary breaker, and pick breaker.

### Screening

Screening is used for sizing coal for further processing. The crushed coal is sized into various fractions: 3" x 1/4", which is further processed in heavy medium separators; and 1/4" x 0 which is further sized by desliming screens into two different sizes, 1/4" x 1/2 mm and 1/2 mm x 0. Coal particles may be screened wet or dry. The various types of screening equipment used include gravity-bar screens (or grizzlies), revolving screens, shaking screens, vibrating screens, and sieve bends. Wet screening produces large quantities of contaminated water whereas dust is generated by dry screening.

## COAL PREPARATION AND HANDLING

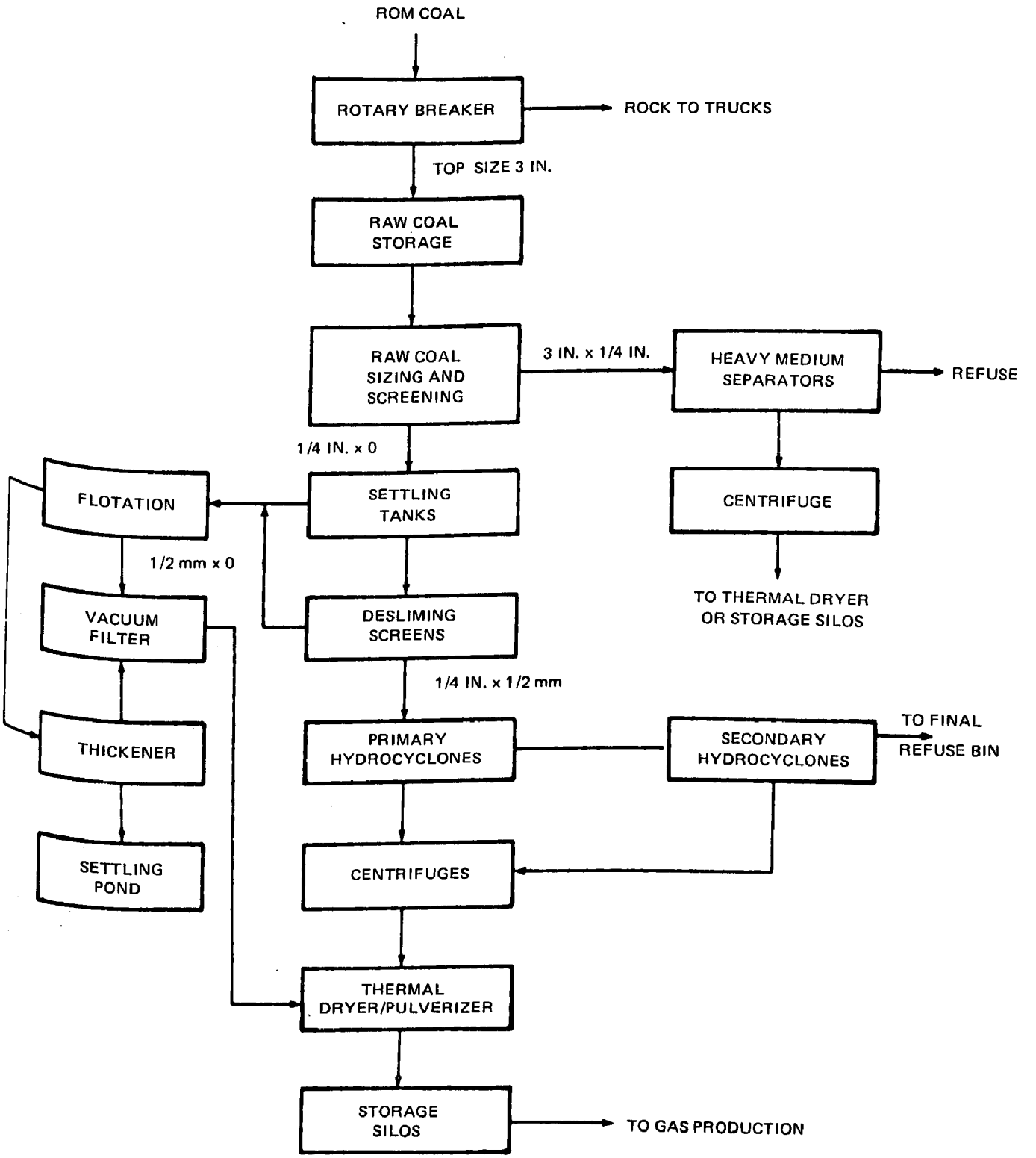


78–02–138–1

## Thermal Drying

Moisture content in the feed coal acceptable to different gasifiers will vary, depending upon the gasifier configuration. During coal sizing and screening, the water content of coal will increase to a level as high as 10 to 15 percent. Generally, the moisture content of coal is reduced to 2 to 6 percent by drying with hot gases in thermal dryers. The hot gases are usually the gaseous combustion effluent from a burner or air heater. After being used for drying the wet coal, this gas is vented to the atmosphere from an elevated vent. Temperature control is essential in drying to prevent spontaneous combustion when the drying medium contains high levels of oxygen. The types of thermal dryers available are rotary dryers, screen-type dryers, fluidized-bed dryers, cascade dryers, and multilouver dryers.

## Air Pollution and Control

Atmospheric discharges from coal preparation units appear to be the largest single source of particulate emissions from the combined-cycle plant if coal is prepared on site. The major sources of particulate emissions, including fugitive dust, are shown in Figure 10-2. Dust is composed of coal particles, typically 1 to 100 microns in size, similar to the parent coal in composition. Fugitive dust is generated from coal unloading, crushing, screening, and conveying operations. More coal dust will be generated for gasifiers requiring smaller particle sizes. Pneumatic conveying of coal also will generate more dust and better control will be necessary. Inactive coal piles do not cause a major dust problem but active coal piles could have higher than usual dust emissions under high wind conditions. Coal stored in silos will produce no dust emission.

Coal dryers in the combined-cycle power system will utilize the stack gas from the heat recovery boiler. This gas is available at a temperature of about 300F. Major components present in the stack gas are carbon dioxide, nitrogen, oxygen and water with small amounts of $NO_x$ and $SO_2$ that are generated during the combustion of the low-Btu gas in the turbine burner. The exhaust gas from the dryer will include, in addition to the components above, coal particulates, water and trace amounts of volatile organics that may be present in the coal. The exhaust gas leaves the dryer at a temperature of about 220F. The coal is heated to a temperature of about 200F. Both BCR air- and oxygen-blown processes use part of the stack gas for coal drying. For a 1,000-MW plant, a flow rate of about 80,400 moles/hr is required. The U-Gas gasifier does not require coal drying. In general, vent gases from the dryer will have a higher moisture content than the stack gas.

## Particulate Control Methods

The particulate control methods applicable to different sources of particulate dust generation also are shown in Figure 10-2. Crushing, conveying, pulverizing, loading and unloading equipment can be operated with enclosures or hoods. Water sprays can be used to prevent dispersion of dust

## PARTICULATES EMISSIONS FROM COAL PREPARATION AND HANDLING

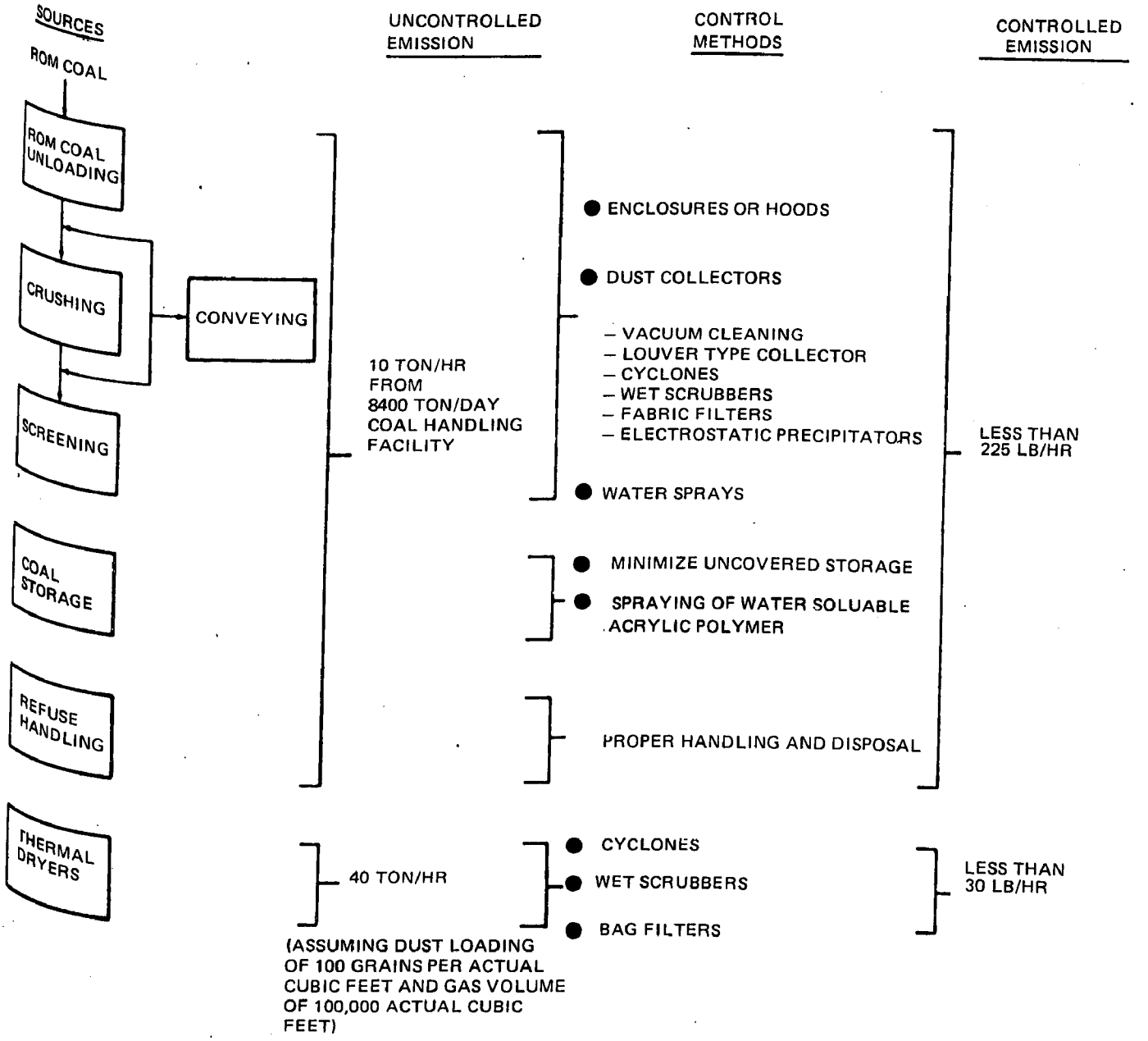


78–02–138–2

particles at loading and unloading points, at transfer and discharge points from crushing and screening, and from the coal storage area. Outdoor coal storage piles should be covered with coatings, such as acrylic polymer, to provide protection from wind and rain.

Application of suitable dust collection devices will also help reduce the particulate emissions. Vacuum-cleaning systems can effectively minimize the particulate dispersion around the plant. The louver-type collectors can operate at 99 percent efficiency when collecting plus 100-mesh dust and are suitable for collecting heavy dust. Primary cyclones can effectively collect particles larger than 200 mesh. Secondary cyclones in series with primary cyclones can collect all the plus 10-micron particles. Wet scrubbers can remove submicron particles, but consume more energy. Fabric filters can operate at a 99 percent efficiency, but their application is limited to temperatures below 500F. Electrostatic precipitators can remove submicron particles.

The particulate loading rate from thermal dryers, if uncontrolled, can be as high as 100 to 300 grains per actual cubic foot. Such a high emission rate can be controlled by operating primary and secondary cyclones in the raw gas transfer line. A wet scrubber can also be used in place of secondary cyclones.

## Water Pollution and Control

Two major sources of wastewater from the coal preparation and handling area are the water generated from coal processing units such as wet screening and the runoff water from raw coal storage and coal waste deposits. Water from the processing units contains fine and colloidal particles, dissolved mineral matter, and salts, all of which were present in coal. Chemical agents added to this water for solids removal by flotation and flocculation are also present. Approximately 2600 gpm of wastewater will be generated from processing 350 TPH (8400 TPD) of raw coal. However, most of it will be treated and recycled for reuse.

The second source of wastewater, runoff water from coal storage and waste deposits, is contaminated with high concentrations of sulfate and metal ions. The amount of runoff water will depend on the rate of precipitation at the site.

### Coal Pile Runoff Water Characteristics--

Coal pile runoff is the drainage from the coal storage area usually resulting from rain. Runoff may cause pollution if allowed to enter waterways or to seep into aquifers. The nature of coal pile runoff depends on the type of coal used. Generally, there are two types of coal pile runoff. The first is neutral or slightly alkaline, contains ferrous ion, and originates from coal containing large amounts of alkaline materials or small amounts of pyrite. The second kind of runoff is highly acidic, contains large amounts of dissolved iron and aluminum, and is produced from pyrite-rich coal.

Pyrite is oxidized by atmospheric oxygen and hydrolyzed to form ferrous sulfate and sulfuric acid according to the reaction

$$2FeS_2 + 7O_2 + 2H_2O \rightarrow 2FeSO_4 + 2H_2SO_4. \quad (10\text{-}1)$$

Additional sulfuric acid may be formed if the ferrous ion is further oxidized to the ferric state. When rain falls on coal piles, the acid is washed out and eventually becomes part of the coal pile drainage. At low pH, metals such as aluminum, copper, manganese, zinc, and others are also dissolved, further degrading the water.

Coal pile runoff water characteristics can vary widely, depending on the coal characteristics, weather conditions, and the length of contact between coal and water. The amount of rainfall that percolates through coal storage piles is a function of the area of the pile and the rainfall. The area of the coal storage pile for a 1000-MW electric plant may range from 12 to 60 acres, depending on how high the coal is piled and the number of operating days the plant has in storage.

Characteristics of coal pile runoff at selected steam-electric power plants are given in Table 10-3 (Reference 10-4). The coal types are unknown. This water is treated along with other waste streams from the integrated plant.

Water Handling and Treatment--

Water with less than 5 percent solid matter, neutral pH, low conductivity, and low bicarbonate can be used in coal preparation plants. The wastewater from the coal preparation units can be handled and treated to this quality by a closed water circuit consisting of thickeners, cyclones, filters, and/or solid bowl centrifuges. Solids are separated by sedimentation. Flocculation increases the size of particles, thereby aiding the sedimentation process. Various flocculation agents are employed for treatment, among which starches are probably those most commonly used.

Thickeners are used to remove solids from contaminated water containing less than 10 percent solids. The overflow from the thickener may contain less than 1 percent solids of very fine size that cannot settle. The underflow is 60 percent solids. Cyclones are also used to remove suspended solids and high ash slimes from the water. Water may be treated in hydrocyclones before it is routed to the thickeners. The spinning force in hydrocyclones separates the solids by forcing them to the outer edge and discharging them as a thick slurry at the bottom of the cone. Fine particles and ash slimes are discharged at the top. Typical performance of a 3-inch diameter hydrocyclone shows that 60 mesh by 0 material containing 10 percent solids is separated into an overflow of 4 percent solids and an underflow of 35 percent solids. The underflow from hydrocyclones or thickeners is routed to settling ponds or further concentrated in centrifuges or vacuum filters, resulting in coarse solid waste, most of which can be recycled for reuse. A simple flow scheme for water handling is shown in Figure 10-3.

TABLE 10-3

COAL-PILE RUNOFF ANALYSIS AT SELECTED PLANTS
(mg/l)

| Plant | A | B | C | D | E | F | G |
|---|---|---|---|---|---|---|---|
| Alkalinity | 6 | 0 | - | - | 14.32 | 36.41 | - |
| Total solids | 1,330 | 9,999 | - | - | - | - | 6,000 |
| TDS | 720 | 7,743 | - | 28,970 | - | - | 5,800 |
| TSS | 610 | 22 | - | 100 | - | - | 200 |
| Ammonia | 0 | 1.77 | - | - | - | - | 1.35 |
| Nitrate | 0.3 | 1.9 | - | - | - | - | 1.8 |
| Phosphorous | - | 1.2 | - | - | - | - | - |
| Turbidity | 505 | - | - | - | 2.77 | 6.13 | - |
| Acidity | - | - | - | 21,700 | 10.25 | 8.84 | - |
| Total hardness | 130 | 1,109 | - | - | - | - | 1,851 |
| Sulfate | 525 | 5,231 | 6,837 | 19,000 | - | - | 861 |
| Chloride | 3.6 | 481 | - | - | - | - | - |
| Aluminum | - | - | - | 1,200 | - | - | - |
| Chromium | 0 | 0.37 | - | 15.7 | - | - | 0.05 |
| Copper | 1.6 | - | - | 1.8 | - | - | - |
| Iron | 0.168 | - | 0.368 | 4,700 | 1.05 | 0.9 | 0.06 |
| Magnesium | 0 | 89 | - | - | - | - | 17.4 |
| Zinc | 1.6 | 2.43 | - | 12.5 | - | - | 0.006 |
| Sodium | 1,260 | 160 | - | - | - | - | - |
| pH | 2.8 | 3 | 2.7 | 2.1 | 6.6 | 6.6 | 4.4 |

## WATER HANDLING FOR COAL PREPARATION

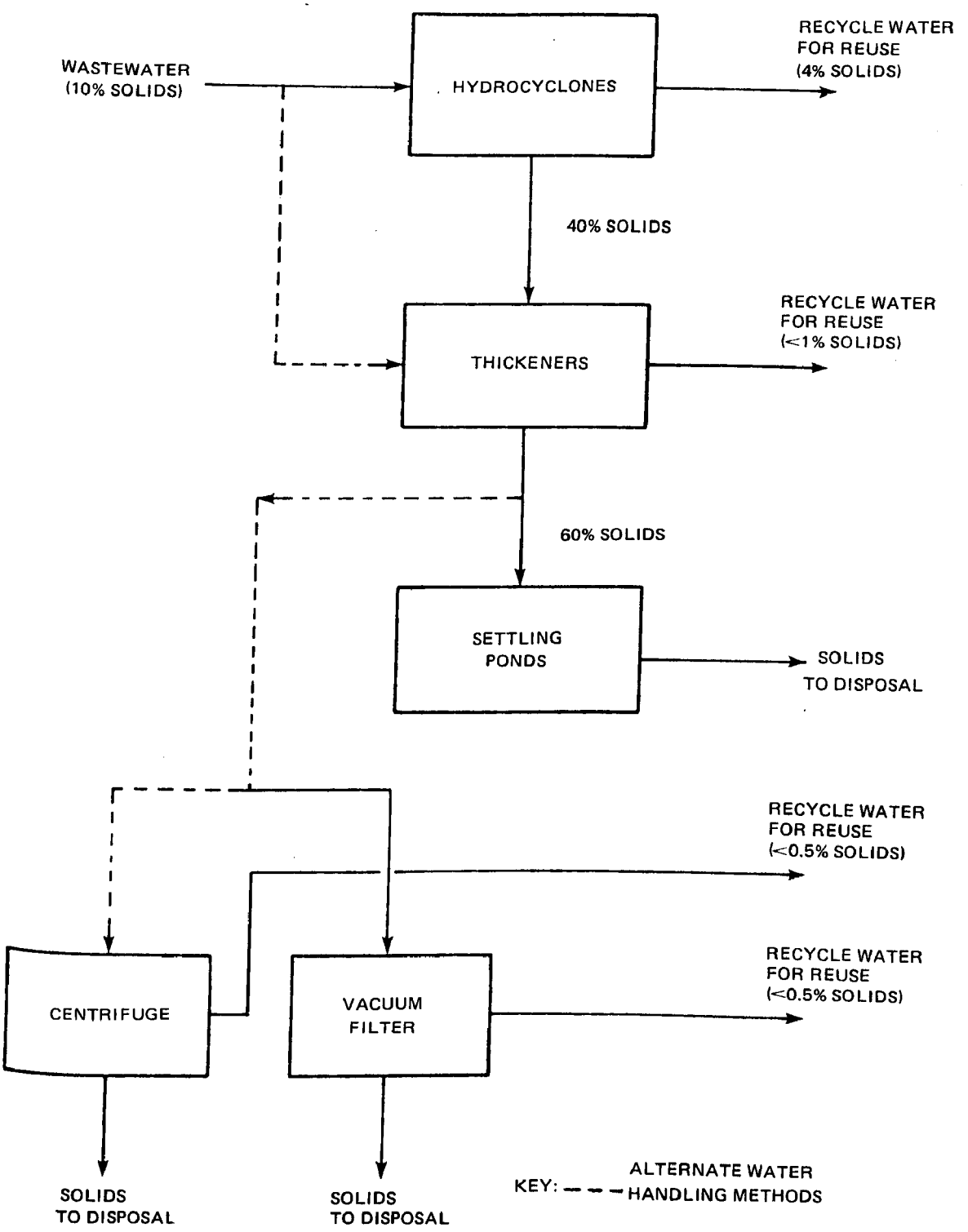


78–02–138–3

Wastewater resulting from raw coal piles or coal waste piles can be treated by neutralization. Acid or alkali is added to neutralize alkaline or acidic wastewater. Common alkalies used are lime, limestone, or soda ash. Sulfuric acid is used to neutralize alkaline water.

Solid Waste and Disposal

It is estimated that about 25 percent of the raw coal mined is disposed of as waste. For a coal conversion plant processing 8400 TPD of prepared coal, the coal refuse will amount to 2100 TPD. The coal refuse consists of waste coal, slate, carbonaceous and pyritic shales, and clay asociated with a coal seam. There are two basic types of coal refuse, coarse and fine. The coarse refuse is separated mainly by crushing the lump coal to a smaller size; the fine refuse is mainly separated from the thickeners as underflow and impounded into the settling ponds. The coarse refuse is normally disposed of in an embankment. Further discussion of the disposal of these wastes is presented in the discussion for the integrated plant.

WASTES FROM GASIFICATION, CLEANUP AND GAS UTILIZATION

The major air emissions resulting from the preparation and combustion of the fuel gas have been identified in Section 9. Thus, the emphasis here will be upon potential water borne and solid wastes.

Waste Water Sources

Water requirements for a coal conversion plant are high. Variation of water requirements results from a combination of process requirements, plus cooling and wastewater streams subjected to varying degrees of conservation and reuse. Low-Btu coal gasification requires about 1 to 3 pounds of water per pound of feed coal. Low-Btu gasification combined with cleanup and a COGAS power cycle will need an additional 2 to 4 pounds of water per pound of feed coal. This water is used in these processes for different objectives. Steam is required for gasification, water is used for scrubbing the raw gases from the gasifier, a large amount of steam is generated in the boilers for use in steam turbines, and circulating cooling water removes excess heat generated in the process.

Part of the water entering the process comes out as wastewater. A portion of the steam fed to the gasifier remains unreacted and exits with raw gas. It is condensed in knock-out drums and combined with the sour water stream. Raw gas from the gasifier is scrubbed with water to absorb ammonia and to lower further the raw gas temperature. The scrubbing water also dissolves hydrogen sulfide and carbon dioxide, and phenols, cyanides, and organics that may be present. This constitutes the sour water stream and is the dirtiest water generated in the process.

Regeneration wastes are produced during resins regeneration of the demineralizers used to deionize boiler feedwater. Cooling tower blowdown is another source of wastewater. Raw water treatment wastes and boiler cleaning

wastes are also generated from the power system. These sources are shown in Figure 10-4. Coal pile drainage and yard runoff wastes will also need treatment before they are discharged. Figure 10-5 shows the sources of wastewater from the integrated plant and the anticipated treatment. The characteristics of these wastewaters, the applicable treatment methods, and possible reuse of the treated water are described in the following sections.

## Wastewater Characteristics

The characteristics of process sour water, coal pile drainage, boiler and cooling tower blowdown, water treatment wastes, equipment cleaning wastes, and floor and yard drains have been identified. These categories include all types of wastewaters generated by the facility.

### Sour Water Characteristics--

Sour water is the dirtiest wastewater generated in the process. A portion of it originates from the use of steam within the gasifiers. The subsequent condensation of the unused steam usually occurs simultaneously with the condensation of hydrocarbon liquids in the offgas from fixed and fluidized bed gasifiers. The vapor phase contains hydrogen sulfide, ammonia, carbon dioxide, and volatile cyanides as major impurities. The water condensed in the knock-out drum contains these gases. The gaseous mixture is further cooled by water scrubbing. Part of the hydrogen sulfide, carbon dioxide, and ammonia dissolve in the scrubbing water. Small amounts of phenols and other organics may also be present in the case of the fluidized bed gasifier. However, the Institute of Gas Technology claims that phenols and organics are not produced in their fluidized bed gasifier.

Sour water characteristics will depend on the composition of the raw gas, the scrubber design, and its operating conditions. Sour water characteristics are not available for the processes considered in this work; however, information from other processes has been used to determine the sour water characteristics. A by-product water analysis from Synthane gasification of various coals is given in Table 10-4 from Reference 10-5. Approximately 60 percent of the nitrogen in coal is converted to ammonia. The concentration of cyanide is notably small (0.6 mg/l or lower). Thiocyanate levels are also low, compared to coke plant weak ammonia liquor. The variation in phenol concentration for different coal feeds is wide, from 1,700 to 6,000 mg/l. The entrained bed BCR gasifier does not produce phenols; thus they will be absent in the wastewater generated in the scrubbing operation of this configuration. Sour water may contain as much as 2 to 5 percent by weight of ammonia and 2 to 6 percent by weight of hydrogen sulfide. Suspended char particles also may be present in the wastewater from the scrubbing operation. Table 10-5 shows the composition of gasification wastewater as estimated by the Bechtel Corporation (Reference 10-6). This wastewater composition was compiled from a number of sources including process design data and analyses of other gasification liquors. The sour water characteristics of Table 10-4 and 10-5 are not used in the present study; but these characteristics indicate the types of compounds that may be present in the wastewater.

## SOURCES OF WASTEWATER IN A COGAS POWER SYSTEM

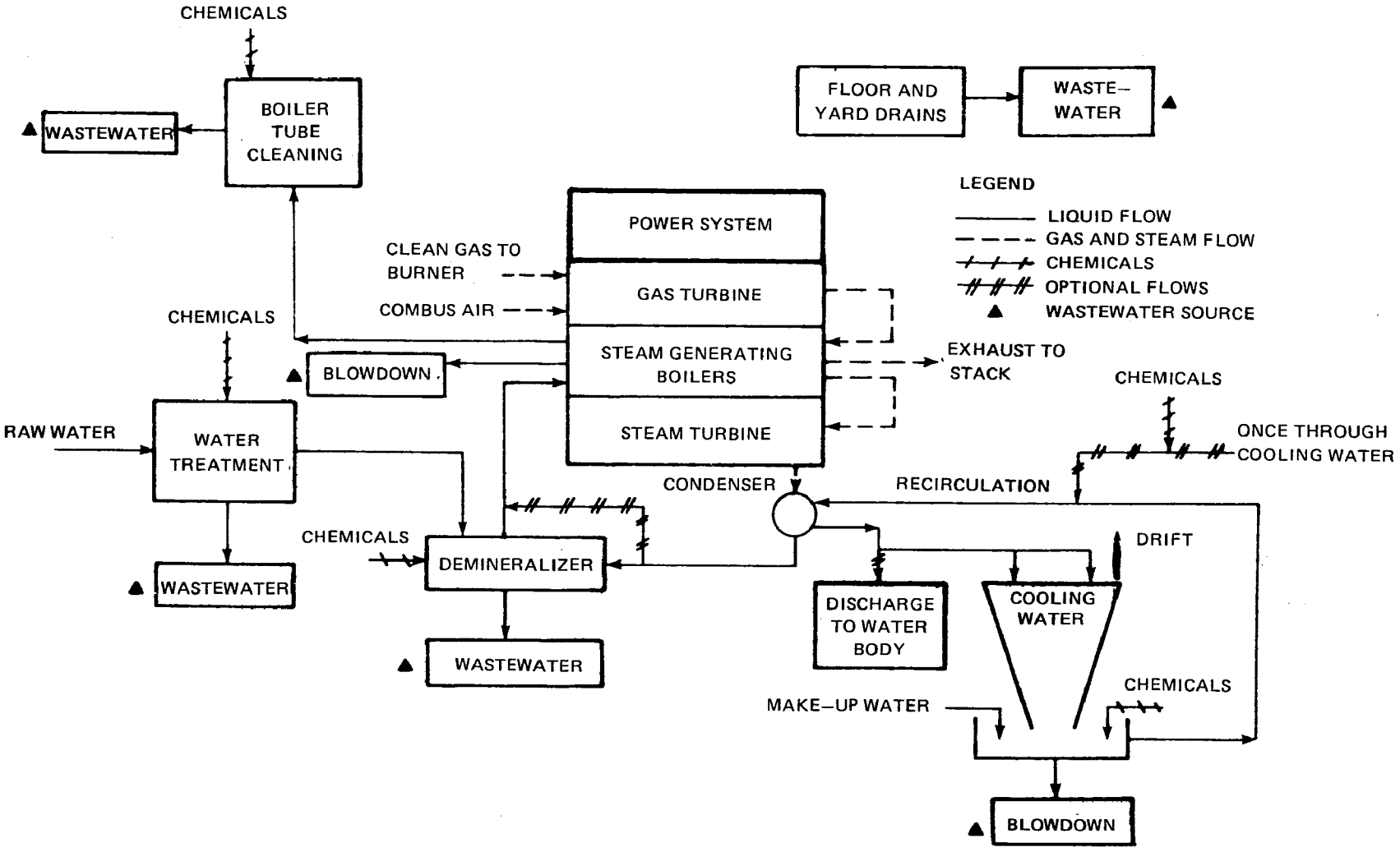


FIG. 10-1



78-02-138-4

## SCHEMATIC REPRESENTATION OF WASTE WATER STREAMS AND ANTICIPATED TREATMENT

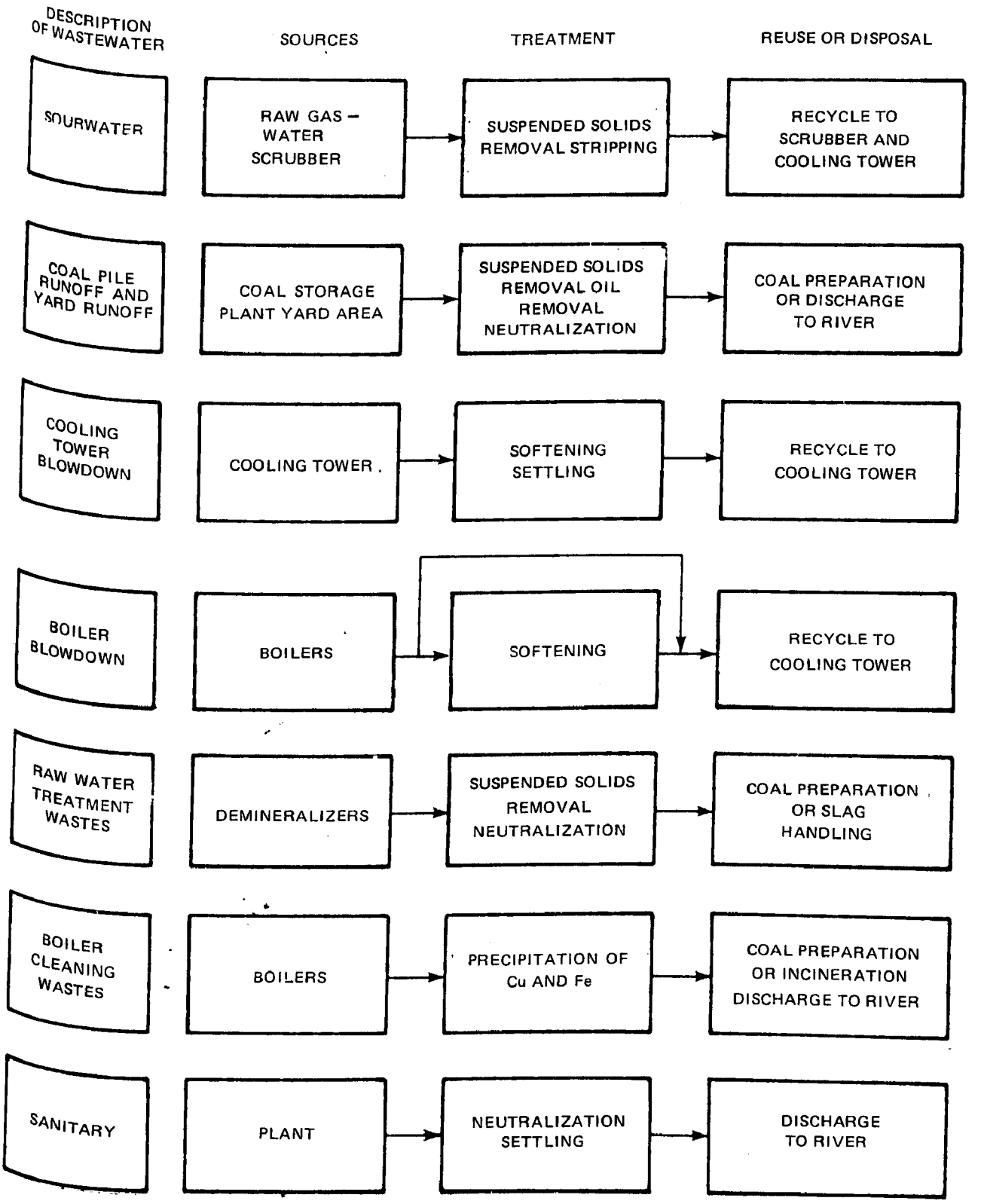

TABLE 10-4

BY-PRODUCT WATER ANALYSIS FROM SYNTHANE GASIFICATION OF VARIOUS COALS
mg/l (except pH)

| | Coke Plant | Illinois No. 6 Coal | Wyoming Subbituminous Coal | Illinois Char | North Dakota Lignite | Western Kentucky Coal | Pittsburgh Seam Coal |
|---|---|---|---|---|---|---|---|
| pH | 9 | 8.6 | 8.7 | 7.9 | 9.2 | 8.9 | 9.3 |
| Suspended Solids | 50 | 600 | 140 | 24 | 64 | 55 | 23 |
| Phenol | 2,000 | 2,600 | 6,000 | 200 | 6,000 | 3,700 | 1,700 |
| COD | 7,000 | 15,000 | 43,000 | 1,700 | 38,000 | 19,000 | 19,000 |
| Thiocyanate | 1,000 | 152 | 23 | 21 | 22 | 200 | 188 |
| Cyanide | 100 | 0.6 | 0.2 | 0.1 | 0.1 | 0.5 | 0.6 |
| $NH_3$ | 5,000 | 8,000 (1) | 9,520 | 2,500 | 7,200 | 10,000 | 11,000 |
| Chloride | - | 500 | - | 31 | - | - | - |
| Carbonate | - | 6,000 (2) | - | - | - | - | - |
| Bicarbonate | - | 11,000 (2) | - | - | - | - | - |
| Total sulfur | - | 1,400 (3) | - | - | - | - | - |

(1) 85 percent free $NH_3$

(2) Not from same analysis

(3) $S^{=}$ = 400

$SO_3^{=}$ = 300

$SO_4^{=}$ = 1,400

$S_2O_3^{=}$ = 1,000

TABLE 10-5

GASIFICATION WASTEWATER - ESTIMATED COMPOSITION

(pH = 8.4)[1]

| Constituent | Concentration mg/l |
|---|---|
| Phenols | 420 |
| Other Organics | 3,000 |
| Thiocyanates | 2 |
| Hydrogen Sulfide | 12 |
| Ammonia | 50 |
| Hydrogen Cyanide | 5 |
| Total Dissolved Solids | 930 |
| Chloride | 300 |
| Calcium | 2 |
| Ferrous or Ferric Ions | 1 |

(1) The gasification system is not specified

Cooling Tower Blowdown Characteristics--

In the operation of a closed cooling system, with wet cooling towers, the warm circulating water returning to the cooling system is cooled by evaporating a small fraction of it. The amount of water evaporated is a function of the temperature change of the water between the inlet and outlet of the cooling system; approximately one percent of the circulating water is evaporated for each 10F drop, assuming a latent heat for water of 1000 Btu/lb.

Additional water is lost to the atmosphere when water is entrained in the air draft (drift loss). Drift losses in modern mechanical-draft towers average 0.005 percent of the cooling-water circulating rate (0.002 percent in modern natural-draft towers), while in older and less efficient towers it can be as much as 0.2 percent of the circulating rate (Reference 10-4).

Because of the water losses from evaporation, the remaining water becomes more concentrated with dissolved solids. If the concentration level of any of the soluble salts exceeds its solubility level, the salt will precipitate. Some of the salts are characterized by reverse solubility, that is, their solubility decreases with increasing temperature. When cooling water saturated with such a salt is heated in the process condensers, the salt will deposit as a scale on the condenser tube walls and reduce heat transfer across the tubes.

Scale formation is controlled by discharging a blowdown stream from the cooling system to limit the concentration of dissolved solids. The amount of blowdown is a function of the number of concentration cycles, that is, the ratio of the content of the critical component in the circulating water to that in the makeup water. Since the drift loss is fixed for a given tower, the blowdown flow is varied to achieve the desired concentration cycles. Thus, for a tower with a 0.005 percent drift, blowdown may vary from 65 percent of makeup for a saltwater system to 20 percent of makeup for the typical freshwater tower.

A variety of chemical additives may be used to treat water circulating in the cooling system to control scaling, erosion, and fouling. These additives will appear in the blowdown along with matter originally present in the makeup stream. Biological growth in the circulating water is usually inhibited by chlorinating the water. Sulfuric acid is often added to cooling water to increase the solubility of the dissolved solids and to lower the make-up requirements due to blowdown. Pentachlorophosphate is sometimes added to inhibit fungi attack on wooden cooling towers.

There may be particular problems associated with leakage from the high-pressure gas process train into the cooling system. Such leakages, if they occur, will also be present in the cooling system blowdown.

Typical cooling tower blowdown characteristics, obtained from an operating power plant in Sioux Falls, South Dakota, are given in Table 10-6.

TABLE 10-6

COOLING TOWER BLOWDOWN CHARACTERISTICS

| Characteristic[1] | Cooling Tower Blowdown |
|---|---|
| pH | 8.7 |
| Temperature (Winter), $^{o}F$ | 69 |
| Temperature (Summer), $^{o}F$ | 84 |
| Alkalinity (as $CaCO_3$) | 123 |
| BOD 5-Day | 4.1 |
| COD | 2.7 |
| Total Dissolved Solids | 1,293 |
| Total Suspended Solids | 37 |
| Ammonia (as N) | 0.03 |

[1] Concentrations in ppm, except pH.

Boiler Blowdown Characteristics--

The formation of scale also is a major problem associated with the operation of boilers or waste heat recovery systems. The primary cause of scale formation is the reverse solubility of many of the scale forming salts. The higher the temperature and pressure of boiler operation, the more insoluble become the salts which form scale. Calcium and magnesium salts are the most common ingredients of boiler scales. Calcium deposition is primarily due to the thermal decomposition of calcium bicarbonate according to the following equation:

$$Ca(HCO_3)_2 \rightarrow CaCO_3 + CO_2 + H_2O \ . \qquad (10\text{-}2)$$

Deposits of iron oxide, copper oxide, and other metallic oxides are frequently found in boilers operating with feedwater having high dissolved oxygen content. These deposits are left by corrosion resulting from dissolved oxygen and carbon dioxide.

Boiler blowdown is the most widely used control method for scale formation. The amount of blowdown required is a function of the allowable concentration of scale forming or other undesirable components in the boiler and the degree to which the make-up water is purified. High-pressure boilers have quite stringent contaminant limits. For example, the allowable concentration of silica varies from 125 ppm at pressures under 300 psi down to 0.5 ppm at pressures in excess of 2000 psi. As a result, the allowable number of concentrations can be quite low in a high pressure steam system. At pressures above 600 psi, silica present in the boiler will vaporize along with other contaminants and escape with the steam. To eliminate silica condensation and resultant fouling of the turbine, it is necessary to maintain extremely low silica concentrations in the boiler which can result in a high amount of blowdown. Other methods, such as steam washing, can be used to reduce the contaminant vapor content of the steam permitting higher boiler water concentrations and reducing the required blowdown quantity or makeup water quality. In the steam washing method, high-pressure steam bypasses the turbine for a short period.

Boiler blowdown contains all of the boiler feedwater additives as well as the soluble matter originally present in the boiler feedwater. Scale formation is usually inhibited by adding chemicals, such as phosphates, which precipitate scale-forming salts to form sludge. Chelating agents are also widely used. They form complex compounds with scale-forming metal ions, thus increasing their solubility. Sodium sulfite or hydrazine is often added to boiler feedwater to inhibit corrosion from dissolved oxygen.

Boiler blowdown is alkaline with a pH of 9.5 to 10 for hydrazine treated water and a pH of 10 to 11 for phosphate treated water. Hydrazine treated boilers produce blowdown containing up to 2 ppm ammonia, those treated with phosphate may contain up to 50 mg/ℓ phosphate and up to 100 mg/ℓ hydroxide alkalinity.

Water Treatment Wastes--

Water treatment waste streams are described by pH, suspended solids concentration, and concentration parameters typical of the processes involved or toxic elements involved in the processes.

Clarification wastes consist of clarifier sludge and filter washes. Clarifier sludge could be either alum or other ionic based sludges from coagulant chemicals. If the clarifier is used for both, lime softening and clarification, the sludge will contain calcium carbonate and magnesium hydroxide. Filter washes contain suspended solids occurring either as light carryover floc from the clarifier or occurring naturally in unclarified raw water. The underflow from clarifiers used in treating makeup water contains from 0.5 percent to 5 percent solids. This underflow will go to a sludge thickener, where the solids content increases to 10-15 percent. The supernatant water from the thickener is returned to the clarifier inlet.

Ion exchanger wastes may be either acidic, alkaline or neutral. Usually, such wastes do not contain suspended matter. They may, however, contain calcium sulfate and calcium carbonate precipitates because of the common ion effect.

Equipment Cleaning Wastes--

A variety of cleaning formulations are used to clean scale and corrosion deposits from boilers and condensers. The cleaning procedure is usually dependent on the composition of the surface-adhering materials. Cleaning solutions are usually grouped by composition into three principal categories. The first category includes the alkaline cleaning mixtures with an oxidizing agent and a copper chelating compound, usually ammonia, for copper removal. The oxidizing compound converts metallic copper deposits to a divalent copper ion which then reacts with ammonia to form a soluble complex. The wastewater effluents contain an ammonium ion, oxidizing agents, high levels of dissolved copper and iron, and have high alkalinity.

The second category includes acidic cleaning mixtures. These mixtures effectively remove scale caused by water hardness. They contain a strong acid and a fluoride salt to remove silica. Waste streams from such mixtures are usually acidic and may contain phosphates, fluorides and BOD, as well as large quantities of iron, copper, and hardness forming salts.

The last group of formulations includes solutions containing alkaline chelating agents and anticorrosion additives. These cleaning mixtures may be used alone or after acid cleaning to neutralize residual acidity as well as to remove additional amounts of scale-forming materials. Their use generates wastewater containing alkalinity, BOD, phosphate, and scale-forming components.

In addition to the three categories of cleaning formulas above, several proprietary formulations have been developed and are manufactured by companies specializing in cleaning chemicals. Most of these chemicals are similar to those described; the resulting wastes contain alkalinity, BOD, phosphate, ammonium compounds, and scale-forming compounds such as iron, copper, and hardness-forming salts.

Floor and Yard Drains--

The flood drains generally contain dust and fines and floor scrubbing detergents. This stream also contains lubricating oil or other oils washed away during equipment cleaning, oil leakage from pump seals, and oil collected from spillage around the storage tank area of oil processing gasifiers.

## Solid Wastes

Power generation by any of the seven integrated power systems considered in this study will result in appreciable quantities of various solid wastes. This discussion is confined to wastes exiting the coal preparation, gasification, gas cleanup, power system and auxiliary facilities. Therefore, construction debris, solids from sewage systems, garbage disposals, and solid waste problems that are part of developmental efforts, are not addressed in this report. Solids formed as a result of control technology selection such as water treatment sludges, elemental sulfur and recovered entrained particulates are discussed later in this section under the heading of Residuals.

Figure 10-6 shows the points at which solids exit a generalized integrated system. Mine tailings such as pyrite and other mineral matter will be removed during coal processing. Intermittent losses of coal solids will occur during preparation for the gasifier. Solid wastes exiting the coal preparation unit were discussed earlier in this section. The mineral residues of gasified coal will exit the gasifiers as slag. Small quantities of dissolved gases may be present in the slag. Spent acceptors, such as dolomite in the Conoco gas cleanup process, will exit the gas cleanup operations.

Tables 10-7 and 10-8 show the output rates for some solid wastes generated in the specified integrated systems.

Based on current data it is impossible to give a detailed description of the gasifier slags. The variety of possible ash characteristics is as unlimited as the number of possible coal compositions. Furthermore, gasifier operating conditions will influence the slagging characteristics of the ash contained in any specified coal feed.

Table 10-9 cites three ash characterizations. The first two are general descriptions of coal ash formed by coal combustion. The third column of Table 10-9 characterizes the ash exiting a Lurgi gasifier. The distribution of mineral matter is similar to that of the general description although some constituents are present in quantities that do not fall in the ranges given for the general ash characteristics.

Solid Waste Disposal--

With the possible exception of spent dolomite, the solid waste generated during integrated power generation will require no additional treatment prior to ultimate disposal. Solids from air and water control technologies, however, may require further treatment prior to disposal.

## SOLID WASTES EXITING A GENERALIZED INTEGRATED PLANT

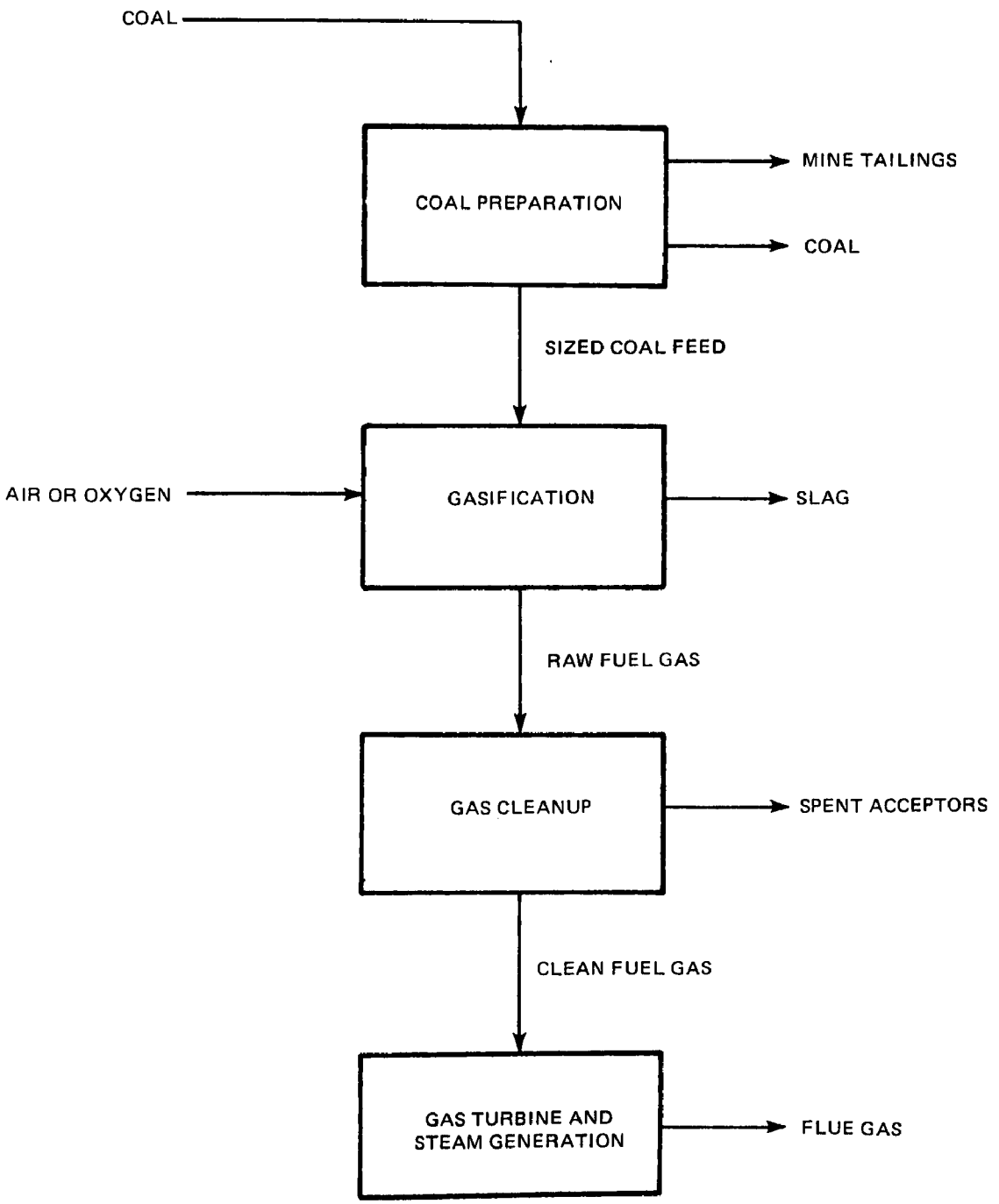


78–02–138–5

TABLE 10-7

SUMMARY OF SOLIDS EXITING THE
BCR AND IGT COMBINED CYCLES

| Configuration/Type of Solid Waste | Quantity of Waste, lb/hr |
|---|---|
| BCR/Selexol/Air and Oxygen | |
| Slag | 70,590 |
| IGT/Selexol/Air | |
| Slag | 73,640 |
| BCR/Conoco/Air | |
| Slag | 70,590 |
| Dolomite Slurry (Total) | 62,200 |
| Water | 34,170 |
| Dolomite | 25,660 |
| Inerts | 2,370 |
| Total Solid Wastes | 132,800* |
| BCR/Conoco/Oxygen | |
| Slag | 70,590 |
| Dolomite Slurry (Total) | 57,360 |
| Water | 31,510 |
| Dolomite | 23,640 |
| Inerts | 2,180 |
| Total Solid Wastes | 127,950 |
| IGT/Conoco/Air | |
| Slag | 73,640 |
| Dolomite (Total) | 61,520 |
| Water | 33,800 |
| Dolomite | 25,380 |
| Inerts | 2,340 |
| Total Solid Wastes | 136,700 |

*Totals are not exact due to rounding of all values to four significant digits.

TABLE 10-8

DESCRIPTION OF SLAG AND SALT SLURRY
EXITING THE MOLTEN SALT GASIFIER

| Slurry Constituents | Quantity, lb/hr |
|---|---|
| Aqueous Phase | |
| $Na_2CO_3$ (aq) | 4,840 |
| $NaHCO_3$ (aq) | 9,873 |
| NaHS (aq) | 2,150 |
| $H_2O$ (1) | 81,386 |
| Total aqueous phase | 98,249 |
| $Na_2CO_3$ (s) | 20,235 |
| $NaHCO_3$ (s) | 5,361 |
| Sand (s) | 64 |
| Slag (s) | 72,589 |
| Total solid phase | 98,248 |
| Total solid waste | 196,497 |

TABLE 10-9

CONSTITUENTS OF COAL ASH

| Constituent | Percent (1) | Percent (1) | Percent (2) |
|---|---|---|---|
| $SiO_2$ | 30-50 | 20-60 | 59.0 |
| $Al_2O$ | 20-30 | 10-35 | 23.7 |
| $Fe_2O_3$ | 10-30 | 5-35 | 4.7 |
| $TiO_2$ | 0.4-1.3 | 0.5-2.5 | 0.9 |
| CaO | 1.5-4.7 | 1-20 | 3.7 |
| MgO | 0.5-1.1 | 0.3-4 | 0.9 |
| $Na_2O$ | 0.4-1.5 | 1-4 | 1.4 |
| $K_2O$ | 1.0-3.0 | 1-4 | 0.8 |
| $SO_3$ | 0.2-3.2 | 0.1-12 | NS |
| C and volatiles | 0.1-4.0 | NS | 5.0 |
| P | 0.1-0.3 | NS | NS |
| B | 0.1-0.6 | NS | NS |
| U and Th | 0.0-0.1 | NS | NS |
| Cu | trace | NS | NS |
| Mn | trace | NS | NS |
| Ni | trace | NS | NS |
| Pb | trace | NS | NS |
| Zn | trace | NS | NS |
| Sr | trace | NS | NS |
| Ba | trace | NS | NS |
| Zr | trace | NS | NS |

NOTE: NS denotes value not specified.

(1) Conventional coal-fired boiler

(2) Lurgi gasifier

Landfilling is the primary technique used for ultimate disposal of solid wastes. Ash disposal via ponds was considered, but is not discussed here because this method of ultimate solid waste disposal is highly site specific. Unless large amounts of land are available adjacent to the other facilities, the costs associated with waste transport become prohibitive. Landfilling is in common use for both industrial and municipal solid waste disposal. If properly designed, landfills are also suitable for disposal of hazardous materials. Landfill designs are site specific; local soil, rainfall, and water table characteristics are among the major design parameters. The quantity and physical and chemical properties of the solids to be landfilled are important process specific variables.

Despite the fact that every landfill design is unique, certain generalizations can be made. Generally, to be economical, landfills should be located within ten miles of the point of waste generation. Landfills should not interface local water tables. A minimum of not more than two feet of soil between the landfill and anticipated high groundwater level is required in several states. For this reason, landfill capacities should be determined by usable land volume rather than land area.

A regular program of local air and water monitoring around the landfill should be established. Materials from the combined cycle power systems deposited in a landfill are poorly characterized. Thus, the precise effects of these wastes are unknown. As a result, a regular monitoring program and detailed records of all landfilling and monitoring activities are essential.

One alternative to landfilling of solid wastes is to develop ways to use them beneficially as raw materials. Slag could be used a constituent of construction materials such as concrete building blocks and asphalt. Another potential application is to use slag as an abrasive. Fragmented slags from other industries have been used in sand blasters to remove paint from marine vessels.

## RESIDUALS

Residuals are generated as a result of applications of control and disposal technologies. The following paragraphs briefly discuss possible adverse environmental effects which could be caused by these wastes. Where necessary, additional control and disposal practices are identified.

Gaseous, liquid, and solid residuals exit the systems controlling emissions to air. Particulates removed from cyclones can be returned to the gasifier or landfilled with solids from the slag removal system. Two residual streams exit the Claus process. Spent Claus catalyst may require chemical stabilization to neutralize ammonia, organic sulfur compounds, and carbonaceous compounds prior to disposal in the landfill to avoid leaching problems. Claus sulfur may be sold as a by-product or landfilled. New uses for sulfur are being developed in order to increase demand for this commodity. Potential applications include sulfur-based fertilizers, construction materials and insulating foams.

Additional sulfur, of high purity, is recovered by the Beavon process and can be marketed or disposed of with Claus sulfur. The Beavon oxidizer vent is a clean gas stream, containing nitrogen, oxygen and water. Minor quantities of ammonia may be present in the Beavon feed gas. If present, it will exit with the oxidizer vent gas. Two water streams from the Beavon unit, the process condensate and the Stretford sorbent blowdown, will require further treatment. Stripping out $H_2S$ from the condensate stream should make that stream suitable for reuse in the plant. The Stretford sorbent blowdown stream should be sent to the wastewater treatment system to remove thiosulfates, thiocyanates and sulfates.

Black water, a wastewater generated by the liquid-phase Claus process, is found in the Conoco configurations. This water can be used to quench gasifier slag and to remove spent dolomite in slurry form.

The water and wastewater treatment facilities will generate solid residuals. Solid wastes from water and wastewater treatment processes are collectively referred to as sludges. There are two types of sludge in water and wastewater. The first is suspended solid materials which form sludges through the mechanisms of coagulation and sedimentation. The second is dissolved chemical salts. Precipitation of these salts forms sludges.

The physical and chemical properties of a sludge depend upon the characteristics of the feed water and the treatment operation selected. Clarifier sludges from raw water treatment are either alum or iron salt sludges, depending on the type of chemical coagulant selected. For example, alum sludges consist of aluminum hydroxide, inorganics such as clay and sand particles, and organic matter including plankton. The sludge from a lime soda softening clarrifier is calcium carbonate, and also contains magnesium hydroxide, iron or aluminum hydroxide, suspended mineral matter, and organics present in lesser amounts. Treatment of coal pile runoff and floor and yard drainage also produces sludge. The primary chemical salts present in such a sludge are calcium carbonate and hydroxides of iron, aluminum, chromium, zinc and manganese. Some coal fines, dust, and oil also may be present. Water demineralization also may produce sludges, calcium sulfate being the primary constituent. These sludges can be disposed of by landfilling. Mixing the sludge from the softening unit with slag should further reduce the risk of leaching of undesirable materials to local groundwaters.

TRACE ELEMENTS

The distribution of trace elements in Illinois No. 6 coal, and the forms in which they possibly occur in coal were described earlier in this section. Trace elements are present in less than 1 percent concentrations. However, they must be considered from the standpoint of their potential environmental impact.

Even in trace amounts, very toxic substances could have adverse effects. Because of the large number of elements present, it is important to identify those most likely to be of environmental concern. Having done this, discussion of the environmental impact can focus on them.

## Trace Element Evaluation

If trace elements or compounds of them are discharged to the environment as a result of integrated power system operations, they may cause adverse health or ecological effects. To aid in evaluating and ranking the elements or their compounds which may have adverse environmental impact, a convenient tool, suggested by the EPA Technical Project Officer, uses the methodology of Multimedia Environmental Goals (MEG's) (Reference 10-7). MEG's characterize environmental pollutants by postulating emission level goals and ambient level goals for air, water, and land. These goals are the result of consistent extrapolations which consider the following data: existing standards and criteria; threshold limit values; acceptable risk levels for human exposure to suspected carcinogens or teratogens; contamination considered reasonable for protection of ecosystems; and cumulative potential in living organisms.

Both acute and chronic effects are of interest for assessing the environmental impact of trace elements from integrated power systems. MEG's address acute and chronic effects in several ways including the following: Minimum Acute Toxicity Effluents (MATE's) are emission level goals which give estimates for concentrations of pollutants in undiluted emission streams that will not adversely affect those persons (for health effects) or ecological systems (for ecological effects) exposed for short periods of time; estimated Permissible Concentrations (EPC's) are ambient level goals based on standards or criteria, toxicity and carcinogenic or teratogenic potential. Toxicity-based EPC's represent concentrations of toxic substances in emission streams which, after dispersion, will not cause the level of contamination in the ambient media to exceed a safe continuous concentration for exposure of persons (for health effects) or ecological systems (for ecological effects).

In the absence of data from actual gasification plants it has been assumed that all the trace elements present in coal are discharged to air, water and land in the same proportions as they are present in coal. According to the method suggested by the Project Officer, dividing the concentration of trace elements in coal by the corresponding concentration for these elements indicative of adverse health or ecological effects will help in establishing rank values for the elements. Values of the two MEG's described above, the MATE's and EPC's for adverse health effects through air and water have been used. The same could be done with ecological MATE's and EPC's.

Water EPC's are confused by the many standards set for water. In cases where a standard exists, the EPC is the standard and the MATE is exactly 5 times the EPC. In other cases, where no standard exists, EPC and MATE values are not simply related. In present lists of MEG values, water and land values are proportional. Thus, rankings of a given trace element distribution are identical for land and water and are designated by water-land. The MATE and EPC values for the trace elements in air and water are shown in Table 10-10. The method employed for ranking the trace elements in terms of health effects (or ecological effects, if desired) is a four step procedure as follows:

TABLE 10-10

MINIMUM ACUTE TOXICITY EFFLUENT AND ESTIMATED PERMISSIBLE CONCENTRATION VALUES FOR AIR AND WATER

| | | MATE | | EPC** | |
|---|---|---|---|---|---|
| Element | Coal Conc. ppm | Air ($\mu g/m^3$) | Water ($\mu g/l$) | Air ($\mu g/m^3$) | Water ($\mu g/l$) |
| Ag | 0.11 | 10 | 250 | 0.024 | 50* |
| As | 24.0 | 2 | 250 | 0.005 | 50* |
| B | 200.0 | 3,100 | 47,000 | 7.4 | 43 |
| Ba | 31.0 | 500 | 5,000 | 1.0 | 1,000* |
| Be | 1.0 | 2 | 30 | 0.01* | 4 |
| Cd | 0.89 | 10 | 50 | 0.12 | 10* |
| Co | 3.6 | 50 | 750 | 0.12 | 0.7 |
| Cr | 15.0 | 1 | 250 | 0.12 | 50* |
| Cu | 19.0 | 200 | 5,000 | 0.5 | 1,000* |
| Ge | 4.3 | 560 | 3,400 | 1.3 | 8 |
| Hg | 0.12 | 50 | 10 | 0.1 | 2* |
| Mn | 48.0 | 5,000 | 250 | 12.0 | 50* |
| Mo | 7.0 | 5,000 | 75,000 | 12.0 | 70 |
| Ni | 15.0 | 15 | 230 | 0.24 | 1.4 |
| Pb | 11.0 | 150 | 250 | 0.36 | 50* |
| Sb | 1.0 | 500 | 7,500 | 1.2 | 7 |
| Se | 13.0 | 200 | 50 | 0.5 | 10* |
| Sr | 37.0 | 3,000 | 4,000 | 5.5 | 27 |
| V | 17.0 | 500 | 2,500 | 1.2 | 7 |
| Zn | 49.0 | 4,000 | 25,000 | 9.5 | 5,000* |
| Mg | 570.0 | 8,000 | 90,000 | 14.0 | 83 |
| Ti | 700.0 | 6,000 | 90,000 | 14.0 | 83 |

*Standard
**Toxicity Based

Step 1. Obtain the ratio values of coal concentration and MATE, and coal concentration and EPC for all the trace elements of interest as revealed by analyses of the coal and corresponding MEG values. In terms of simple equations Step 1 can be stated as:

$$(RM)i = \frac{(TEC)i}{(MATE)i} \qquad (10\text{-}3)$$

$$(RE)i = \frac{(TEC)i}{(EPC)i} \qquad (10\text{-}4)$$

Where: (RM)i: Ratio value for trace element i using MATE
(RE)i: Ratio value for trace element i using EPC
(TEC)i: Concentration of trace element i in coal

Step 2. Give ranking numbers (MRANK)i and (ERANK)i to the elements on the (RM)i and (RE)i lists, respectively, based on the values, with rank one given to the smallest ratio value. Thereby (MRANK)i and (ERANK)i will be obtained for all the trace elements. (MRANK)i denotes the rank of trace element i when MATE is used and (ERANK)i denotes the rank of trace element i when EPC value is used.

Step 3. Add the (MRANK)i and (ERANK)i to obtain (TVAL)i for all trace elements. In effect, this weights equally the measures of acute and chronic adverse health (or ecological) effects to obtain a single ranking:

$$(TVAL)i = (MRANK)i + (ERANK)i. \qquad (10\text{-}5)$$

Step 4. Give a new rank (NRANK)i based on the (TVAL)i values, with one given to the element having highest value of TVAL. This corresponds to the highest overall ranking for adverse health (or ecological) effects.

Employing the four steps above on the coal considered in this study and using MATE and EPC values such as in Table 10-10, (RM)i and (RE)i values for air and water are calculated. Some of these are shown in Table 10-11. (MRANK)i or (ERANK)i values are shown in the left column. The elements are displayed in descending order of the rank which resulted. Steps 3 and 4 are then done to obtain (TVAL)i, and based on these values for the elements, the rank (NRANK)i is given to each element. The (TVAL)i and (NRANK)i values for air and water are shown in Table 10-12. From this table it is evident that arsenic, nickel, and titanium rank in the top five for both air and water-land. Titanium's rank is due mainly to its high concentration in coal. It should present no problem if it remains in the slag. Chromium is second on the list for air. However, since chromium, a nonvolatile element, should also remain in the slag, it may not escape, either with any air emission that may occur or with the sour water generated during scrubbing. Nonetheless, chromium, if leached from the slag, will affect the ground water quality. Elements present in the slag may be in the form of oxides, sulfides, or carbonates; these compounds tend to generate leachate of the elements. Cadmium and lead are ranked

TABLE 10-11

ENVIRONMENTAL METHODOLOGY FOR RANKING
TRACE ELEMENTS IN AIR AND WATER

| (MRANK)i or (ERANK)i | Air | | | | Water | | | |
|---|---|---|---|---|---|---|---|---|
| | (RM)i | | (RE)i | | (RM)i | | (RE)i | |
| 22 | Cr | 15.0 | As | 4,800.0 | Se | 0.26 | Ni | 10.71 |
| 21 | As | 12.0 | Cr | 125.0 | Mn | 0.192 | Ti | 8.43 |
| 20 | Ni | 1.0 | Be | 100.0 | As | 0.096 | Mg | 6.87 |
| 19 | Be | 0.5 | Ni | 62.5 | Ni | 0.0652 | Co | 5.14 |
| 18 | Ti | 0.12 | Ti | 50.0 | Cr | 0.06 | B | 4.65 |
| 17 | Mg | 0.095 | Mg | 40.7 | Pb | 0.044 | V | 2.43 |
| 16 | Cu | 0.095 | Cu | 38.0 | Be | 0.0333 | Sr | 1.37 |
| 15 | Cd | 0.089 | Ba | 31.0 | Cd | 0.0178 | Se | 1.3 |
| 14 | Pb | 0.074 | Pb | 30.56 | Hg | 0.012 | Mn | 0.96 |
| 13 | Co | 0.072 | Co | 30.0 | Ti | 0.0078 | Ge | 0.54 |
| 12 | Se | 0.065 | B | 27.03 | V | 0.0069 | As | 0.48 |
| 11 | B | 0.0645 | Se | 26.0 | Mg | 0.0063 | Cr | 0.3 |
| 10 | Ba | 0.062 | V | 14.17 | Ba | 0.0062 | Be | 0.25 |
| 9 | V | 0.034 | Cd | 7.42 | Co | 0.0048 | Pb | 0.22 |
| 8 | Sr | 0.0123 | Sr | 6.73 | B | 0.0043 | Sb | 0.14 |
| 7 | Zn | 0.0122 | Zn | 5.16 | Cu | 0.0038 | Mo | 0.1 |
| 6 | Ag | 0.011 | Ag | 4.58 | Zn | 0.0019 | Cd | 0.09 |
| 5 | Mn | 0.0096 | Mn | 4.0 | Ge | 0.0013 | Hg | 0.06 |
| 4 | Ge | 0.008 | Ge | 3.31 | Sr | 0.008 | Zn | 0.01 |
| 3 | Hg | 0.0024 | Hg | 1.2 | Ag | 0.004 | Ba | 0.003 |
| 2 | Sb | 0.002 | Sb | 0.83 | Sb | 0.0001 | Ag | 0.0022 |
| 1 | Mo | 0.0014 | Mo | 0.58 | Mo | 0.0009 | Cu | 0.0019 |

TABLE 10-12

ENVIRONMENTAL RANKING OF TRACE ELEMENTS IN AIR AND WATER-LAND

| Air | | | Water-Land | |
|---|---|---|---|---|
| (TVAL)i | Element | (NRANK)i | Element | (TVAL)i |
| 43 | As | 1 | Ni | 41 |
| 42 | Cr | 2 | Se | 37 |
| 40 | Be | 3 | Mn | 35 |
| 39 | Ni | 4 | Ti | 34 |
| 36 | Ti | 5 | As | 32 |
| 34 | Mg | 6 | Mg | 31 |
| 32 | Cu | 7 | V | 29 |
| 28 | Pb | 8 | Cr | 29 |
| 26 | Co | 9 | Co | 28 |
| 25 | Ba | 10 | Pb | 26 |
| 24 | Cd | 11 | Be | 26 |
| 23 | Se | 12 | B | 26 |
| 23 | B | 13 | Cd | 21 |
| 19 | V | 14 | Sr | 20 |
| 16 | Sr | 15 | Hg | 19 |
| 14 | Zn | 16 | Ge | 18 |
| 12 | Ag | 17 | Ba | 13 |
| 10 | Mn | 18 | Sb | 10 |
| 8 | Ge | 19 | Zn | 10 |
| 6 | Hg | 20 | Cu | 8 |
| 4 | Sb | 21 | Mo | 8 |
| 2 | Mo | 22 | Ag | 5 |

in the middle for both air and water-land. Mercury, near the bottom of the list, is volatile and will likely appear in quench water. It possibly could gain a higher ranking if a volatility factor is considered for water-land ranking. Vanadium shows higher environmental rank through water-land than through air. Boron appears in the middle of the list for both air and water.

These rankings are useful for a first cut at relative environmental effects caused by various elements. The method gives a preliminary comparison among different elements which includes both their concentration in coal and their MEG values. The ranking could be misleading if all considerations are not taken into account, such as with the case of chromium.

Considering the volatilities of trace elements is a valuable refinement to the ranking procedure. The (RM)i and (RE)i values of trace elements designated in Table 10-11 can be multiplied by the corresponding volatility factors. The percentage change values for Illinois No. 6 coal in Table 10-13 were taken to be representative values for volatilities. These are taken from Reference 10-3 and are a summary of analytical results of feed and residue samples of coal hydrogasified in a bench-scale unit. The same procedure as outlined previously is then followed to establish the ranks of trace elements in air and water-land. These modified ranks are shown in Table 10-14. As expected, mercury ranks significantly higher for water-land. Arsenic, cadmium, lead, beryllium mercury, nickel, vanadium, and boron appear near the top of either air rankings or water-land rankings. Chromium has a low effect through air or water-land and ranks near the bottom of the lists. As stated earlier, this reflects the nonvolatile nature of chromium which causes it to remain in slag. This modified ranking further justifies the focus on the trace elements which were selected and asterisked in Table 10-14. When volatility is considered, it appears that selenium would be a logical choice for addition to the list of those to be more critically examined.

## Environmental Impact of Trace Elements

The gasifier, an enclosed vessel, discharges no pollutants directly to the environment. However, the fate of the trace elements, whether they leave in the gasifier raw gas or in the gasifier ash/slag is controlled by factors such as reactor configuration and bed type, extent of pretreatment, type of coal feed system, and operating conditions. The trace elements that leave the gasifier in the raw fuel gas and hot ash/slag streams may find their way into the atmosphere and groundwater through various vent gas, water, and solid discharges from the downstream processing steps including the water treatment reuse system, the sulfur recovery unit, and the slag quench.

The possible discharge sources of trace elements are shown in Figure 10-7. Particulates discharged to air from coal storage and coal preparation will probably have the same trace element distribution as the parent coal. Water from the same sources will contain suspended coal solids; again, the trace element distribution in these solids will be the same as in the parent coal. The refuse from coal preparation will be mainly coal associated mineral matter, with a few trace elements associated with the mineral matter.

TABLE 10-13

TRACE ELEMENT DISTRIBUTION ILLINOIS NO. 6 COAL

| Element | Feed, ppm(1) | % Change(2) | Final Residue, ppm(3) |
|---|---|---|---|
| Antimony | 1.0 | -28 | 0.72 |
| Arsenic | 24 | -33 | 16 |
| Barium | 31 | 0 | 31 |
| Beryllium | 1.0 | -24 | 0.76 |
| Bismuth | 1.1 | -51 | 0.54 |
| Boron | 200 | -10 | 180 |
| Cadmium | 0.89 | -76 | 0.21 |
| Calcium | 3500 | -34 | 2,300 |
| Chlorine | 2,300 | -74 | 590 |
| Chromium | 15 | 0 | 15 |
| Cobalt | 3.6 | 0 | 3.6 |
| Copper | 19 | 0 | 19 |
| Fluorine | 61 | -26 | 45 |
| Germanium | 4.3 | -9 | 3.9 |
| Iron | 14,000 | -8 | 13,000 |
| Lead | 11 | -47 | 5.8 |
| Lithium | 33 | 0 | 33 |
| Magnesium | 570 | +2 | 580 |
| Manganese | 48 | -19 | 39 |
| Mercury | 0.12 | -96 | 0.005 |
| Molybdenum | 7.0 | -3 | 6.8 |
| Nickel | 15 | -7 | 14 |
| Nitrogen | 10,000 | -76 | 2,400 |
| Potassium | 1,700 | 0 | 1,700 |
| Samarium | 0.74 | 0 | 0.74 |
| Selenium | 13 | -42 | 7.5 |
| Silicon | 20,000 | 0 | 20,000 |
| Silver | 0.11 | -67 | 0.036 |
| Sodium | 1,400 | +7 | 1,500 |
| Strontium | 37 | 0 | 37 |
| Sulfur | 38,000 | -79 | 7,800 |
| Tellurium | 8.1 | -41 | 4.8 |
| Thorium | 1 | -- | 1 |
| Tin | 2.0 | -45 | 1.1 |
| Titanium | 700 | -3 | 679 |
| Vanadium | 17 | -18 | 14 |
| Ytterbium | 0.56 | -9 | 0.51 |
| Zinc | 49 | -27 | 36 |
| Zirconium | 35 | 0 | 35 |

NOTES:

1. Feed composition is the same as in Table 10-1.

2. Average values of analytical results from two similar gasification runs in Hygas.

3. Minus sign indicates loss and plus sign indicates gain of any given element. The percent losses shown for PDU (Hygas) runs are good to ± 6 percent (i.e., losses less than 10-12% are not significant).

TABLE 10-14

MODIFIED ENVIRONMENTAL RANKING OF
TRACE ELEMENTS IN AIR AND WATER-LAND

| Air | | Water-Land |
|---|---|---|
| Element | (NRANK)i | Element |
| *As | 1 | Se |
| *Be | 2 | Mn |
| *Pb | 3 | *As |
| *Ni | 4 | *Pb |
| *Cd | 5 | *Cd |
| Se | 6 | *B |
| Ag | 7 | *Hg |
| *B | 8 | *V |
| *V | 9 | Ti |
| Ti | 10 | *Be |
| Zn | 11 | *Ni |
| *Hg | 12 | Zn |
| Mn | 13 | Sb |
| Sb | 14 | Ag |
| Mo | 15 | Mo |
| *Cr | 16 | Mg |
| Mg | 17 | Co |
| Cu | 18 | *Cr |
| Co | 19 | Sr |
| Ba | 20 | Cu |
| Sr | 21 | Ba |
| Ge | 22 | Ge |

*Elements selected for focus (See Table 1-6).

FIG. 10 -7

## POSSIBLE DISTRIBUTION OF TRACE ELEMENTS

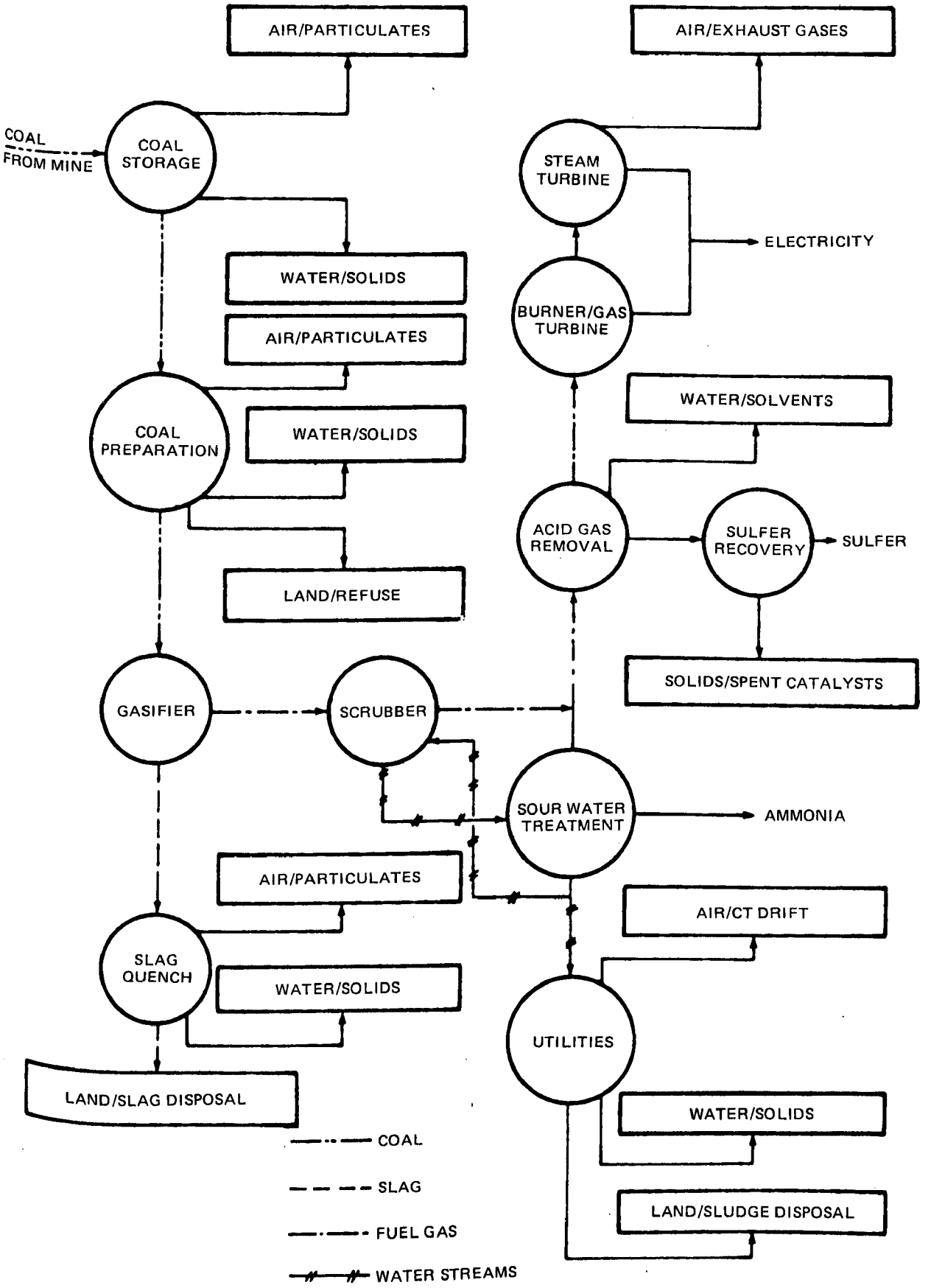


78-01-92-4

The coal conversion reaction takes place in a reducing atmosphere and may form compounds of the trace elements such as hydrides, carbonyls or sulfides which may be more volatile than the element. Some trace elements in the coal react with the organic matter in ash to form organometallic compounds. The high operating pressures in the gasifier may cause carbon monoxide to form carbonyls with iron and nickle. The formation of three typical compounds and their properties are shown in Table 10-15 (Reference 10-8). Many of the trace elements volatilize to varying extents during the high-temperature processing. The forms in which these elements appear in the raw gas are determined by their chemical form in the feed coal and by processing conditions. The predicted volatility of some elements is given in Table 10-16 from Reference 10-9. Elements having a high volatility and high toxicity can adversely affect the environment if released to the atmosphere. Such elements include mercury, selenium, arsenic, and lead. In the case of zinc, boron, and fluorine, the degree to which they volatilize has not yet been determined, but may be rather significant. If only 10 percent of these elements are volatilized, large quantities will be present in the raw gas from the gasifier since they are present in the coal in relatively higher concentratins than other trace elements.

It should be noted that volatilities estimated by the various researchers are based mainly on work done for the EPA at IGT (References 10-3 and 10-10). This work centered on the analysis of feed and residues from the various stages of the HYGAS process. It includes data from both bench scale and pilot plant work. Because gasifier conditions may vary widely from those of the HYGAS process, the form in which the trace elements appear will vary as will their associated volatilities. Nevertheless, these extrapolations are of interest and should be helpful in obtaining a proper perspective on the trace element problem.

Trace elements which are nonvolatile or are only partially volatile will leave the gasifier with the slag. Theoretically, if the trace element composition of the entering coal and the exiting slag is known, the trace elements leaving the gasifier with the raw gas can be estimated. However, trace element analysis is a difficult laboratory procedure; thus, the estimated raw gas composition from the analysis of Lurgi ash and feed coal does not correlate with the analytical trace element composition of the raw gas, as shown in Table 10-17 from Reference 10-11.

The slag from the gasifier is quenched and some of the trace elements in the mineral matter may dissolve in the quench water. The slag form of the mineral matter reduces the level of water contamination. A very low discharge of particulates to atmosphere from slag handling will occur. Slag is generally transported to the disposal site; further distribution of trace elements from slag will depend on the type of disposal method used. The trace elements in slag material are not likely to respond independently to weathering, leaching, burying or other chemical or physical processes; their behavior more likely will be tied directly to the behavior of the major mineral components.

*TABLE 10-15*

*FORMATION OF TRACE ELEMENT COMPOUNDS*

| Compound, Structure | Synthesis Path | M.P., °C | B.P., °C | Comments |
|---|---|---|---|---|
| $Ni(CO)_4$<br>Nickel Carbonyl | $NiCl_2 \xrightarrow{NH_3CO} Ni(CO)_4$ | -25 | 43 | oxidizes slowly in air |
| $Fe(CO)_5$<br>Iron Carbonyl | $Fe + 5CO \xrightarrow[250^oC]{S} Fe(CO)_5$ | -21 | 103 | oxidizes readily in air |
| 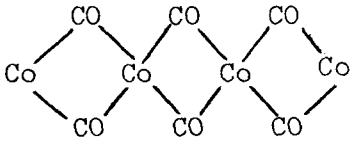 <br>Octa(carbonyl)-dicobalt | $CoCO_3 \xrightarrow[150^oC]{H_2,\ CO} Co_2(CO)_8$ | 51 | 52 | unstable in air, has catalytic effects. |

TABLE 10-16

PREDICTED VOLATILITIES OF TRACE ELEMENTS

| Element | Possible % of Content of Coal Volatile [1] |
|---|---|
| Cl | 90+ |
| Hg | 90+ |
| Se | 74 |
| As | 65 |
| Pb | 63 |
| Cd | 62 |
| Sb | 33 |
| V | 30 |
| Ni | 24 |
| Be | 18 |
| Zn | (10) |
| B | (10) |
| F | (10) |
| Ti | (10) |
| Cr | nil |

[1] Mainly based on data for Pittsburgh Seam Coal from Ref. 10-10, and indicated at 10% for Zn, B, F and Ti, in the absence of data.

TABLE 10-17

RETENTION OF TRACE ELEMENTS IN GASIFIER ASH

| Element | Predicted* Ash Retention, % Present in Coal | Actual Amount in Lurgi Gas, % of Element Present in Coal |
|---|---|---|
| Ag | 36% | 140.1% |
| As | 67 | 1.11 |
| Be | 76 | 86.0 |
| Hg | 4 | 0.4 |
| Mn | 81 | 134.4 |
| Pb | 53 | 88.5 |
| V | 50 | 114.8 |
| Zn | 74 | 120.6 |

* Assumes 100% of coal ash goes to the gasifier ash.

Slag from the gasifier will be disposed of either by burial in mine spoil or by landfill. The trace elements present in the slag may leach to some extent and enter the ground water. The leaching of trace elements from slag will be lower than leaching from ash. Leaching experiments have been con-conducted for power plant ash by Ecology Consultants, Inc., (Ft. Collins, Colorado) and Peabody's Central Laboratory. Both reported that if leaching occurs with water originally meeting drinking water standards, then the leachate will still meet drinking water standards after reaching apparent equilibrium leaching conditions. Specifically, both lead and mercury will occur in this leachate only in the parts per billion range. Similar leaching studies (Reference 10-11) were conducted by Peabody's Central Laboratory on gasifier ash produced with Montana Rosebud Coal and Illinois No. 5 and 6 seam coals. Analyses of leachate from these experiments are presented in Table 10-18.

The raw gas from the gasifier contains entrained char particles. The sizes of some of these could range to micron and submicron levels. Particles in the range of 0.5 to 10 microns in diameter cannot be removed even with high-efficiency cyclones. Concentrations of lead, cadmium, selenium, arsenic, nickel, and chromium increase markedly with a decrease in particle size. Most of these elements are concentrated in particles between 0.5 and 10 μ in diameter. The char particles recovered in the cyclones are generally recycled back to the gasifier.

The raw gas, when scrubbed with water, will have more of the particles removed; a trace quantity of particulates may remain in the gas. Volatilized trace elements present as a vapor will condense and enter the quench water. Table 10-19 (Reference 10-5) shows trace elements in Synthane condensate from an Illinois No. 6 coal gasification test and Table 10-20 (Reference 10-12) shows a breakdown of trace elements found in streams from one commercial Lurgi coal gasification facility. The raw gas from the Lurgi gasifier is scrubbed with water. This mixture is then treated in an oil-water separator. The bottoms from the separator are removed as tar. The top floating layer is tarry oil and is drained out. In the remaining water, tarry gas liquor is further treated to remove phenols and ammonia. Assuming that all the volatilized trace elements end up in the sour water generated by scrubbing the raw gas, and using the volatility data of Table 10-16, the quantities of trace elements in slag and sour water can be estimated. An estimate of the trace element distribution for a BCR gasifier processing coal for a 1,000-MW power plant is shown in Table 10-21.

In the BCR/Air-Blown/Selexol, BCR/Oxygen/Selexol, and IGT/Air-Blown/Selexol processes, trace elements that may be neither condensed during raw gas cooling nor removed during the subsequent scrubbing operation, but remain in the process gas stream may be removed in the acid gas removal unit. The recovery of ammonia from sour water by stripping is done at a temperature of about 230F. Most trace elements present in the sour water will not volatilize at this temperature and, thus, will remain in the water. Part of this water is recycled for scrubbing and a buildup of trace elements may occur. The rest of the stripped water is used as makeup to cooling towers. Trace elements entering with this makeup cooling water may leave by drift or blowdown.

TABLE 10-18

CONTENT OF LEACHATE FROM GASIFIER ASH
(MONTANA ROSEBUD COAL)

| Element | Concentration (ppb) 1 Week | 2 Weeks |
|---|---|---|
| Lithium | 750 | 820 |
| Lead | 100 | 100 |
| Vanadium | 80 | 80 |
| Antimony | 57 | 49 |
| Zinc | 39 | 12 |
| Chromium | 14 | 20 |
| Copper | 11 | 20 |
| Manganese | 10 | 30 |
| Silver | 8 | 10 |
| Nickel | < 8 | < 8 |
| Cadmium | < 3 | < 3 |
| Beryllium | < 3 | < 3 |
| Arsenic | < 1 | < 1 |
| Mercury | 0.1 | 0.5 |

TABLE 10-19

TRACE ELEMENTS IN CONDENSATE FROM
AN ILLINOIS NO. 6 COAL GASIFICATION TEST

| Element | ppm |
|---|---|
| Calcium | 4 |
| Iron | 3 |
| Magnesium | 2 |
| Aluminum | 0.8 |
| | ppb |
| Selenium | 360 |
| Potassium | 160 |
| Barium | 130 |
| Phosphorus | 90 |
| Zinc | 60 |
| Manganese | 40 |
| Germanium | 40 |
| Arsenic | 30 |
| Nickel | 30 |
| Strontium | 30 |
| Tin | 20 |
| Copper | 20 |
| Columbium | 6 |
| Chromium | 6 |
| Vanadium | 3 |
| Cobalt | 2 |

TABLE 10-20

DISTRIBUTION OF TRACE ELEMENTS FOR LURGI GASIFICATION

| Element | Ash% | Tarry Gas Liquor% | Tar% | Tar Oil% |
|---|---|---|---|---|
| Antimony | 50.0 | 45 | 3.75 | 1.25 |
| Arsenic | 27.0 | 66.5 | 2.25 | 4.25 |
| Boron | 92.0 | 6.5 | 1.496 | .004 |
| Bromine | 10.86 | 89.0 | .14 | -- |
| Cadmium | 52.0 | 45.0 | .90 | 2.1 |
| Fluorine | 56.0 | 43.917 | .08 | .003 |
| Lead | 93.6 | 2.054 | 4.33 | .016 |
| Mercury | 50.93 | 40.30 | 8.12 | .65 |
| Nickel | 99.554 | 0.41 | .03 | .006 |
| Zinc | 100% | -- | -- | -- |

TABLE 10-21

POTENTIAL RATE OF TRACE ELEMENTS

| Element | Feed lbs/hr | Final Residue lbs/hr | Sour Water lbs/hr |
|---|---|---|---|
| Chlorine | 1,610.0 | 161.0 | 1,449.0 |
| Mercury | 0.084 | 0.008 | 0.076 |
| Selenium | 9.1 | 2.4 | 6.7 |
| Arsenic | 16.8 | 4.4 | 12.4 |
| Lead | 7.7 | 4.9 | 2.8 |
| Cadmium | 0.62 | 0.23 | 0.39 |
| Antimony | 0.7 | 0.47 | 0.23 |
| Vanadium | 11.9 | 8.3 | 3.6 |
| Nickel | 10.5 | 8.0 | 2.5 |
| Beryllium | 0.7 | 0.57 | 0.13 |
| Zinc | 34.3 | 30.9 | 3.4 |
| Boron | 140.0 | 126.0 | 14.0 |
| Fluorine | 42.7 | 38.4 | 4.3 |
| Titanium | 490.0 | 441.0 | 49.0 |
| Chromium | 10.5 | 10.5 | |

The importance of trace elements in system design is apparent from the previous discussion. Unfortunately, the estimated fate of these elements is based on scant available data. However, it does indicate that a number of these elements are potentially troublesome. The appearance of so many trace elements in the most troublesome of both the air and water-land columns of Tables 10-12 and 10-14 indicates that these must not be discharged into the stack nor be discharged in a water stream.

While the actual form of the trace element compounds is largely unknown, it is likely that a water wash will be sufficient to control the air emissions to within allowable limits. The ability of a system using high-temperature cleanup to deal with these elements is subject to question. Further, the "dirty" water will require processing prior to disposal. In all likelihood it will be used as quench water for slag in which case virtually all of the trace elements could be concentrated in one location. By proper attention to leaching problems, this could be the most effective means of dealing with the trace elements.

## REFERENCES


10-1. Gluskoter, H. J., et al: Trace Elements in Coal: Occurrence and Distribution. EPA-600/7-77-064, (NTIS No. PB 270-922), June 1977.

10-2. Fleming, D. K.: Purification of Intermediate Streams in Coal Gasification. Clean Fuels from Coal Symposium II Papers, IGT, Chicago, Ill., June 1975.

10-3. Attari, A., M. Mensinger, J. Pau: Initial Environmental Test Plan for Source Assessment of Coal Gasification. EPA-600/2-76-259, (NTIS No. PB261-916), September 1976.

10-4. Rice, James K. and Sheldon D. Strauss: Water Pollution Control in Steam Plants, Power 20(4), April 1977, pp. 5-1 to 5-20.

10-5. Forney, Albert J., William P. Haynes, Stanley J. Gasior, Glenn E. Johnson, and Joseph P. Strakey, Jr.: Analyses of Tars, Chars, Gases, and Water Found in Effluents from the Synthane Process, prepared for U.S. Energy Research and Development Administration by Pittsburgh Energy Research Center, Pittsburgh, Pennsylvania, November 1975.

10-6. Skrylov V. and R. A. Stenzel: Reuse of Wastewaters-Possibilities and Problems, Proceedings of the Workshop for Industrial Process Design for Pollution Control, New Orleans, Louisiana, October 15-17, 1974, American Institute of Chemical Engineers, New York, New York, 1975.

10-7. Cleland, J. G. and G. L. Kingsbury: Multimedia Environmental Goals for Environmental Assessment. Volume 1: EPA-600/7-77-136a and Volume II: EPA-600/7-77-136b, (NTIS No. PB276-920), November 1977.

10-8. Talmage, S. S.: Health Aspects of Coal Conversion Technologies, presented at the Southeastern Regional Meeting of the American Chemical Society, Gatlinburg, Tennessee, October 27-29, (1976).

10-9. Jahnig, C. E.: Evaluation of Pollution Control in Fossil Fuel Conversion Processes Gasification: Section 7. U-Gas Process, EPA-600/2-74-009-i, (NTIS No. PB247-226), September 1975.

10-10. Attari, A.: Fate of Trace Constituents of Coal During Gasification. EPA-650/2-73-004, (NTIS No. 223-001), August 1973.

10-11. Beckner, Jack L.: Trace Element Composition and Disposal of Gasifier Ash, presented to the 7th Synthetic Pipeline Gas Symposium, Chicago, Illinois, October 27-29, 1975.

10-12. Sinor, J. E., editor: Evaluation of Background Data Relating to New Source Performance Standards for Lurgi Gasification, EPA-600/7-77-057, (NTIS No. PB269-557), June 1977.

## SECTION 11

## PERFORMANCE AND COST OF INTEGRATED SYSTEMS

### INTRODUCTION

The performance and cost of eight integrated power systems are presented. The merits of air- vs oxygen-blown operation for a BCR-type gasifier are compared for both a low- and high-temperature sulfur removal system. The U-Gas fluid bed gasifier was evaluated at two steam feed rates with low-temperature desulfurization and at low steam feed rate with high-temperature cleanup. The molten-salt gasifier has integral desulfurization and only a single configuration was investigated. All fuel processing systems were integrated with a high-performance combined-cycle power generating system. Performance of the resulting systems is summarized in Table 11-1 and generating costs are given in Table 11-2.

The results show a reduced difference between high- and low-temperature systems over that previously estimated. Also, little difference in performance and cost of power generation is seen between the air- and oxygen-blown BCR type systems. Not shown here are the emission estimates. Sulfur emissions from the high-temperatures oxygen-blown system are relatively high (0.73 $lb/10^6$ Btu). Also, nitrogen oxide control may be difficult because of the high combustion temperature associated with the medium-Btu gas from the oxygen-blown systems.

The improved performance of the air-blown systems with low-temperature cleanup should improve the viability of this concept for future clean power generation.

### PERFORMANCE

Discussion of the integration of the various systems is divided into three parts. These are low-temperature cleanup, high temperature cleanup, and the molten salt system. A versatile simulation system was used in estimating performance. It permits schematic changes and parametric variations to be made with little difficulty. It is described in Reference 11-1.

TABLE 11-1

SYSTEM PERFORMANCE SUMMARY

| Gasification and Cleanup | U-Gas High Steam | U-Gas Low Steam | Low-Temperature Cleanup BCR-Air | Low-Temperature Cleanup BCR-$O_2$ | Low-Temperature Cleanup Molten Salt | High-Temperature Cleanup U-Gas Low Stm | High-Temperature Cleanup BCR-Air | High-Temperature Cleanup BCR-$O_2$ |
|---|---|---|---|---|---|---|---|---|
| Coal feed rate - lb/hr | 700,000 | 700,000 | 700,000 | 700,000 | 700,000 | 700,000 | 700,000 | 700,000 |
| Oxidant/coal ratio | 3.013 | 2.864 | 2.78 | .594 | 2.806 | 2.864 | 2.78 | .594 |
| Steam/coal ratio | .557 | .197 | .144 | .598 | 0 | .197 | .144 | .598 |
| Transport gas/coal ratio | .053 | .053 | .088 | .088 | 0 | .053 | .088 | .088 |
| Gasifier exit temp-F | 1660 | 1660 | 1700 | 1700 | 1800 | 1660 | 1,770 | 1700 |
| Gasifier jacket heat - Btu/lb coal | 686 | 686 | 214 | 180 | - | 686 | 214 | 180 |
| Gasifier press - psia | 400 | 400 | 400 | 400 | 400 | 400 | 400 | 400 |
| Raw gas heating value-Btu/SCF (HHV) | 138.8 | 162 | 171.2 | 270.7 | 151.4 | 162 | 171.2 | 270.7 |
| Cold gas efficiency - % | 80.1 | 81.6 | 83.0 | 85.7 | 80.8 | 81.6 | 83.0 | 85.7 |
| Clean gas temperature - F | 944 | 944 | 926 | 926 | 805 | 1,000 | 1,000 | 1,000 |
| Clean gas heating value - Btu/SCF (HHV) | 158.6 | 169.7 | 177.9 | 332.4 | 154 | 160.9 | 170.0 | 268.0 |
| **Utilities** | | | | | | | | |
| Boost compressor power - MW | 32.6 | 31.0 | 27.8 | 22 | 35.2 | 31 | 27.8 | 22 |
| Let-down turbine power - MW | - | - | - | 28 | - | - | - | 28 |
| Gasifier & Cleanup - MW | 27.9 | 26.7 | 29.7 | 20.5 | 15.7 | 13.4 | 21.2 | 19.4 |
| Boiler & Cooling tower - MW | 16.3 | 16.9 | 15.8 | 14.9 | 14.2 | 17.2 | 16.6 | 15.6 |
| Misc Plant losses - MW | 6.5 | 6.7 | 6.6 | 6.0 | 5.7 | 6.8 | 6.8 | 6.3 |
| **Power System** * | | | | | | | | |
| Gas Turbine exhaust temp - F | 1194 | 1189 | 1187 | 1181 | 1191 | 1193 | 1190 | 1193 |
| Stack temperature - F | 290 | 300 | 315 | 310 | 299 | 303 | 309 | 318 |
| **Output** | | | | | | | | |
| Gas turbine - MW | 697 | 712 | 725 | 659 | 618 | 730 | 743 | 694 |
| Steam turbine - MW | 460 | 478 | 453 | 422 | 407 | 483 | 465 | 440 |
| Total - MW | 1157 | 1190 | 1178 | 1081 | 1025 | 1213 | 1208 | 1134 |
| Net plant output - MW | 1074 | 1109 | 1098 | 1045 | 955 | 1145 | 1136 | 1098 |
| Efficiency - Overall (HHV coal) | .429 | .443 | .439 | .418 | .433 | .457 | .454 | .439 |

* Power system parameters for all systems: Gas turbine inlet temperature - 2600 F pressure ratio - 18:1
Steam cycle - 2400 psi/950 F/950 F reheat condenser - 4 in Hg

*TABLE 11-2*

*OVERALL POWER GENERATION COST SUMMARY*

| | Low-Temperature Cleanup | | | | | High Temperature Cleanup | | |
|---|---|---|---|---|---|---|---|---|
| Capital Costs - $\$10^6$ | U-Gas High Steam Selexol | U-Gas Low-Stm Selexol | BCR Air Selexol | BCR Oxygen Selexol | Molten Salt | U-Gas Low-Stm Conoco | BCR Air Conoco | BCR Oxygen Conoco |
| Power System | 399 | 398 | 404 | 418 | 400 | 361 | 377 | 410 |
| Gasification & Cleanup | 264 | 243 | 253 | 307 | 283 | 182 | 220 | 299 |
| Total Capital Cost | 663 | 641 | 657 | 725 | 683 | 543 | 597 | 709 |
| η (HHV Coal) | .429 | .443 | .439 | .418 | .433 | .457 | .454 | .439 |
| Electricity Costs - Mills/kWh | | | | | | | | |
| Owning Cost | 18.37 | 17.76 | 18.20 | 20.08 | 18.92 | 15.04 | 16.54 | 19.64 |
| Power Sys. Oper. Cost | 2.27 | 2.27 | 2.30 | 2.38 | 2.28 | 2.06 | 2.15 | 2.34 |
| G&C Oper. Cost | 3.64 | 3.35 | 3.49 | 4.24 | 3.91 | 2.51 | 3.04 | 4.13 |
| Fuel at $1.00/MMBtu | 7.96 | 7.70 | 7.77 | 8.17 | 7.88 | 7.47 | 7.52 | 7.77 |
| Total Mills/kWh | 32.24 | 31.08 | 31.76 | 34.87 | 32.99 | 27.08 | 29.25 | 33.88 |

The power system, described in Section 7, combines an advanced gas turbine with a high-performance steam cycle for full utilization of the available fuel energy. The gas turbine has a pressure ratio of 18:1 and a firing temperature of 2600 F. Steam cycle throttle conditions are 2400 psi and 950 F with a single reheat to 950 F. Condenser pressure is 4 in. Hg.

The sensitivity of overall peformance to the careful matching of fuel processing and power system characteristics can be best demonstrated by comparing the estimated efficiency of the BuMines-type gasifier integrated with the high-performance power system to previous performance estimates that used a high (24:1) pressure ratio gas turbine and a simple, nonreheat steam cycle. Performance with the better steam system decreases to 35 percent compared to the 37 percent previously estimated. The major difference between the BuMines-type gasifier and those presented here is the inability to use the sensible heat in the fuel gas to raise steam. Because of this decrease in performance, the BuMines-type gasifier was not included in the current detailed comparisons.

Low-Temperature Systems with Selexol Desulfurization

Flow sheets for the four gasifier/low-temperature system combinations using Selexol desulfurization are shown in Figures 11-1 through 11-4. Material balances for the respective systems are given in Tables 11-3 through 11-6 and utility requirements in Tables 11-7 through 11-10. Schematically, the first three gasifier/cleanup configurations are virtually the same, differing only in the point of steam bleed for the gasifier and in the way in which the waste heat boiler is segmented. The oxygen-blown system differs in that it includes a let-down turbine, air cooler, oxygen plant and oxygen compressor. These replace the air cooler and boost compessor needed in the air-blown system to raise the pressure from compressor discharge to gasifier inlet pressure. The let-down turbine extracts enough power to drive the oxygen compressor when operating with a back pressure of 100 psig, the operating pressure required for the air separation process. For both cost and performance reasons bleed air from the gas turbine compressors was used as a source of compressed air for the oxygen plant. The incremental cost of the gas turbine compressor is very small compared to a unit dedicated only to the oxygen plant. From a performance standpoint, the high efficiencies achieved in the gas turbine compressor outweigh the advantages of intercooling normally associated with a separate compressor.

The fuel gas processing schematic is identical for all four systems. Raw fuel gas is first cooled in a boiler to approximately 1200 F then sent to a fuel gas regenerator. The 1200 F value was selected as the maximum temperature desired for the hot side of the regenerative heat exchanger. Dirty gas leaving the regenerator is cooled further in a feedwater heater and subsequent cooler where most of the water vapor is condensed and removed from the gas stream.

A water wash is used for both ammonia and particulate removal. Nearly 100 percent of the ammonia is removed along with equal molar quantities of $CO_2$ and $H_2S$. These tend to enhance ammonia removal but require separation so that the $H_2S$ can be sent to the sulfur recovery unit. A Phosam unit is used

# SYSTEM FLOW DIAGRAM— U–GAS/ SELEXOL

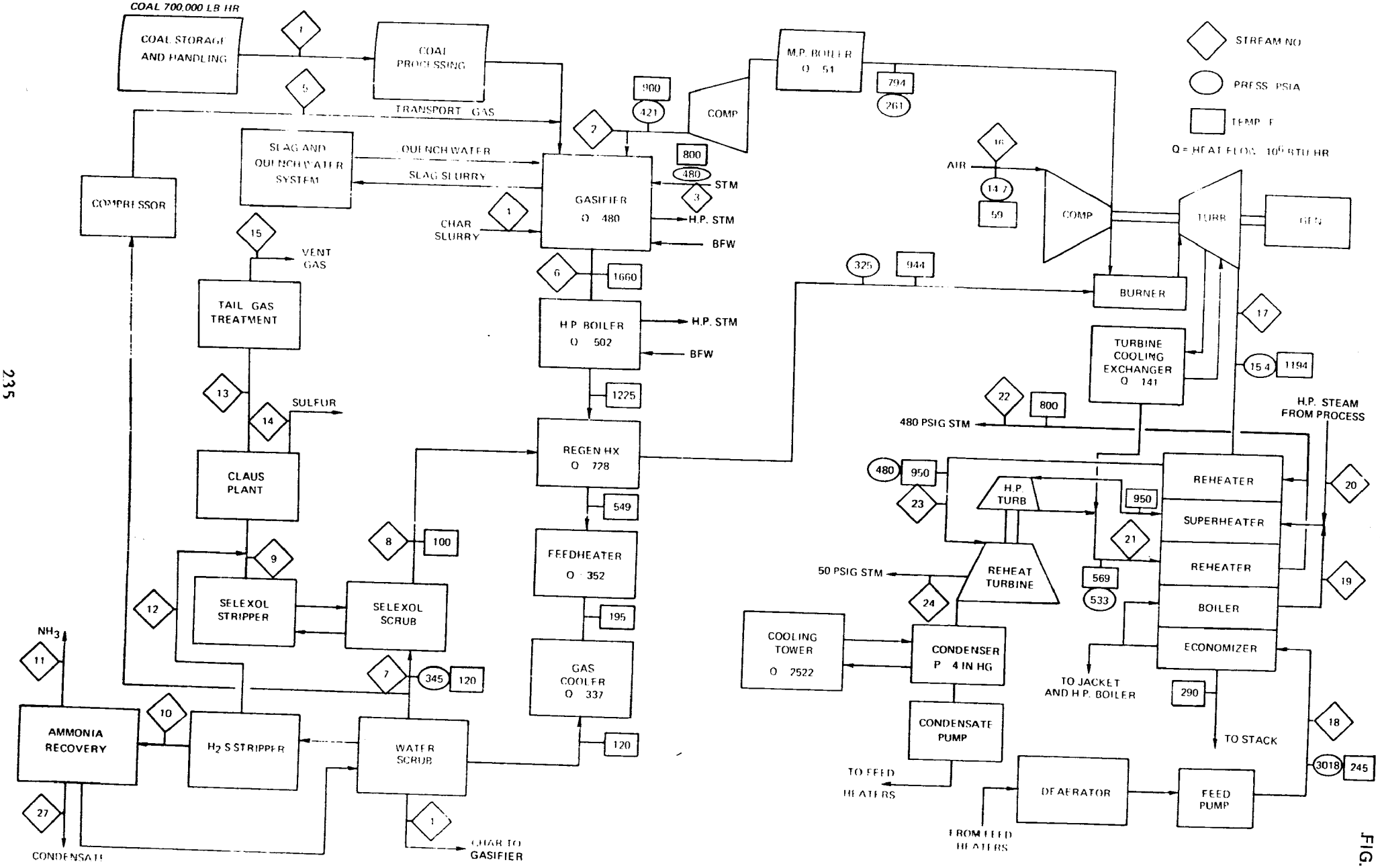


FIG. 11–1

TABLE 11-3

MATERIAL BALANCE FOR U-GAS/AIR-BLOWN/SELEXOL

| Stream | | 1 | | 2 | | 3 | | 4 | |
|---|---|---|---|---|---|---|---|---|---|
| Comp | M.W. | LB/HR | MOLS/HR | LB/HR | MOLS/HR | LB/HR | MOLS/HR | LB/HR | MOLS/HR |
| $CH_4$ | 16.04 | | | | | | | | |
| $H_2$ | 2.016 | | | | | | | | |
| CO | 28.01 | | | | | | | | |
| $CO_2$ | 44.01 | | | | | | | | |
| $H_2S$ | 34.08 | | | | | | | | |
| COS | 60.07 | | | | | | | | |
| $NH_3$ | 17.03 | | | | | | | | |
| $N_2$ | 28.02 | | | 1,592,999 | 56,852.2 | | | | |
| $O_2$ | 32.00 | | | 483,603 | 15,112.6 | | | | |
| $H_2O$ | 18.02 | | | 32,811 | 1,820.8 | 390,029 | 21,644.2 | 263 | |
| Coal Char | | 700,000 | | | | | | 175 | |
| TOTAL | | 700,000 | | 2,109,413 | 73,785.6 | 390.029 | 21,644.2 | 438 | |

*MATERIAL BALANCE FOR U-GAS/AIR-BLOWN/SELEXOL*

| Stream | | 5 | | 6 | | 7 | | 8 | |
|---|---|---|---|---|---|---|---|---|---|
| Comp | M.W. | LB/HR | MOLS/HR | LB/HR | MOLS/HR | LB/HR | MOLS/HR | LB/HR | MOLS/HR |
| $CH_4$ | 16.04 | 820 | 51.1 | 64,186 | 4,001.6 | 63,369 | 3,950.7 | 62,801 | 3,915.3 |
| $H_2$ | 2.016 | 524 | 259.7 | 40,995 | 20,334.6 | 40,471 | 20,075.0 | 40,410 | 20,044.5 |
| CO | 28.01 | 8,490 | 303.1 | 664,899 | 23,737.9 | 656,414 | 23,435.0 | 654,235 | 23,357.2 |
| $CO_2$ | 44.01 | 6,285 | 142.8 | 491,944 | 11,178.0 | 483,930 | 10,995.9 | 406,793 | 9,243.2 |
| $H_2S$ | 34.08 | 344 | 10.1 | 26,562 | 779.4 | 26,133 | 766.8 | 147 | 4.3 |
| COS | 60.07 | 18 | 0.3 | 1,899 | 31.6 | 1,874 | 31.2 | 1,226 | 20.4 |
| $NH_3$ | 17.03 | -- | -- | 715 | 42.0 | -- | -- | -- | -- |
| $N_2$ | 28.02 | 20,676 | 737.9 | 1,619,595 | 57,801.4 | 1,598,922 | 57,063.6 | 1,595,380 | 56,937.2 |
| $H_2O$ | 18.02 | 97 | 5.4 | 252,507 | 14,012.6 | 7,574 | 420.3 | 166 | 9.2 |
| TOTAL | | 37,254 | 1,510.4 | 3,163,302 | 131,919.1 | 2,878,687 | 116,738.5 | 2,761,158 | 113,531.1 |

| Stream | | 9 | | 10 | | 11 | | 12 | |
|---|---|---|---|---|---|---|---|---|---|
| Comp | M.W. | LB/HR | MOLS/HR | LB/HR | MOLS/HR | LB/HR | MOLS/HR | LB/HR | MOLS/HR |
| $CH_4$ | 16.04 | 568 | 35.4 | | | | | | |
| $H_2$ | 2.016 | 61 | 30.5 | | | | | | |
| CO | 28.01 | 2,179 | 77.8 | | | | | | |
| $CO_2$ | 44.01 | 77,136 | 1,752.7 | | | | | 1,730 | 39.3 |
| $H_2S$ | 34.08 | 25,968 | 762.5 | | | | | 92 | 2.7 |
| COS | 60.07 | 649 | 10.8 | | | | | -- | -- |
| $NH_3$ | 17.03 | -- | -- | 711 | 41.8 | 711.8 | 41.8 | 4 | 0.2 |
| $N_2$ | 28.02 | 3,542 | 126.4 | | | | | | |
| $H_2O$ | 18.02 | 7,410 | 411.2 | 476,700 | 26,453.9 | | | 2,285 | 126.8 |
| TOTAL | | 117,513 | 3,207.3 | 477,411 | 26,495.7 | 711.8 | 41.8 | 4,111 | 169.0 |

MATERIAL BALANCE FOR U-GAS/AIR-BLOWN/SELEXOL

| Stream | | 13 | | 14 | | 15 | | 16 | |
|---|---|---|---|---|---|---|---|---|---|
| Comp | M.W. | LB/HR | MOLS/HR | LB/HR | MOLS/HR | LB/HR | MOLS/HR | LB/HR | MOLS/HR |
| $CH_4$ | 16.04 | 379 | 23.6 | | | 379 | 23.6 | | |
| $H_2$ | 2.016 | 41 | 20.4 | | | -- | -- | | |
| CO | 28.01 | 1,451 | 51.8 | | | 1,375 | 49.1 | | |
| $CO_2$ | 44.01 | 80,688 | 1,833.4 | | | 81,110 | 1,843.0 | | |
| $H_2S$ | 34.08 | 279 | 8.2 | | | -- | 2 ppm | | |
| COS | 60.07 | 433 | 7.2 | | | 18 | 0.3 | | |
| $SO_2$ | 64.06 | 493 | 7.7 | | | -- | -- | | |
| $NH_3$ | 17.03 | 3 | 0.2 | | | 3 | 0.2 | | |
| $N_2$ | 28.02 | 48,802 | 1,741.7 | | | 48,802 | 1,741.7 | 10,188,976 | 361,696 |
| $O_2$ | 32.00 | | | | | | | 3,074,848 | 96,089 |
| $H_2O$ | 18.02 | 23,940 | 1,328.5 | | | 4,208 | 233.5 | | |
| S | 32.06 | | | 24,865 | 775.6 | | | | |
| TOTAL | | 156,509 | 5,022.7 | 24,865 | 775.6 | 135,895 | 3,891.4 | 13,261,608 | 457,785 |

| Stream | | 17 | | 18 | | 19 | | 20 | |
|---|---|---|---|---|---|---|---|---|---|
| Comp | M.W. | LB/HR | MOLS/HR | LB/HR | MOLS/HR | LB/HR | MOLS/HR | LB/HR | MOLS/HR |
| $CH_4$ | 16.04 | | | | | | | | |
| $H_2$ | 2.016 | | | | | | | | |
| CO | 28.01 | 1,608,257 | 36,543 | | | | | | |
| $CO_2$ | 44.01 | | | | | | | | |
| $H_2S$ | 34.08 | | | | | | | | |
| COS | 60.07 | | | | | | | | |
| $SO_2$ | 64.06 | | | | | | | | |
| $NH_3$ | 17.03 | | | | | | | | |
| $N_2$ | 28.02 | 9,997,139 | 354,886 | | | | | | |
| $O_2$ | 32.00 | 1,586,880 | 49,590 | | | | | | |
| $H_2$ | 18.02 | 502,848 | 27,905 | 3,015,000 | 167,350 | 0 | | 2,984,785 | 165,670 |
| S | 32.06 | | | | | | | | |
| TOTAL | | 13,695,124 | 468,924 | 3,015,000 | 167,350 | | | 2,984,785 | 165,670 |

MATERIAL BALANCE FOR U-GAS/AIR-BLOWN/SELEXOL

| Comp | Stream M.W. | 21 LB/HR | 21 MOLS/HR | 22 LB/HR | 22 MOLS/HR | 23 LB/HR | 23 MOLS/HR | 24 LB/HR | 24 MOLS/HR |
|---|---|---|---|---|---|---|---|---|---|
| $CH_4$ | 16.04 | | | | | | | | |
| $H_2$ | 2.016 | | | | | | | | |
| CO | 28.01 | | | | | | | | |
| $CO_2$ | 44.01 | | | | | | | | |
| $H_2S$ | 34.08 | | | | | | | | |
| COS | 60.07 | | | | | | | | |
| $SO_2$ | 64.06 | | | | | | | | |
| $NH_3$ | 17.03 | | | | | | | | |
| $N_2$ | 28.02 | | | | | | | | |
| $O_2$ | 32.00 | | | | | | | | |
| $H_2O$ | 18.02 | 3,126,316 | 173,530 | 396,892 | 22,030 | 2,729,424 | 151,500 | 144,308 | 8,010 |
| S | 32.06 | | | | | | | | |
| TOTAL | | 3,126,316 | 173,530 | 396,892 | 22,030 | 2,729,424 | 151,500 | 144,308 | 8,010 |

# SYSTEM FLOW DIAGRAM U–GAS/ LOW STEAM/ SELEXOL

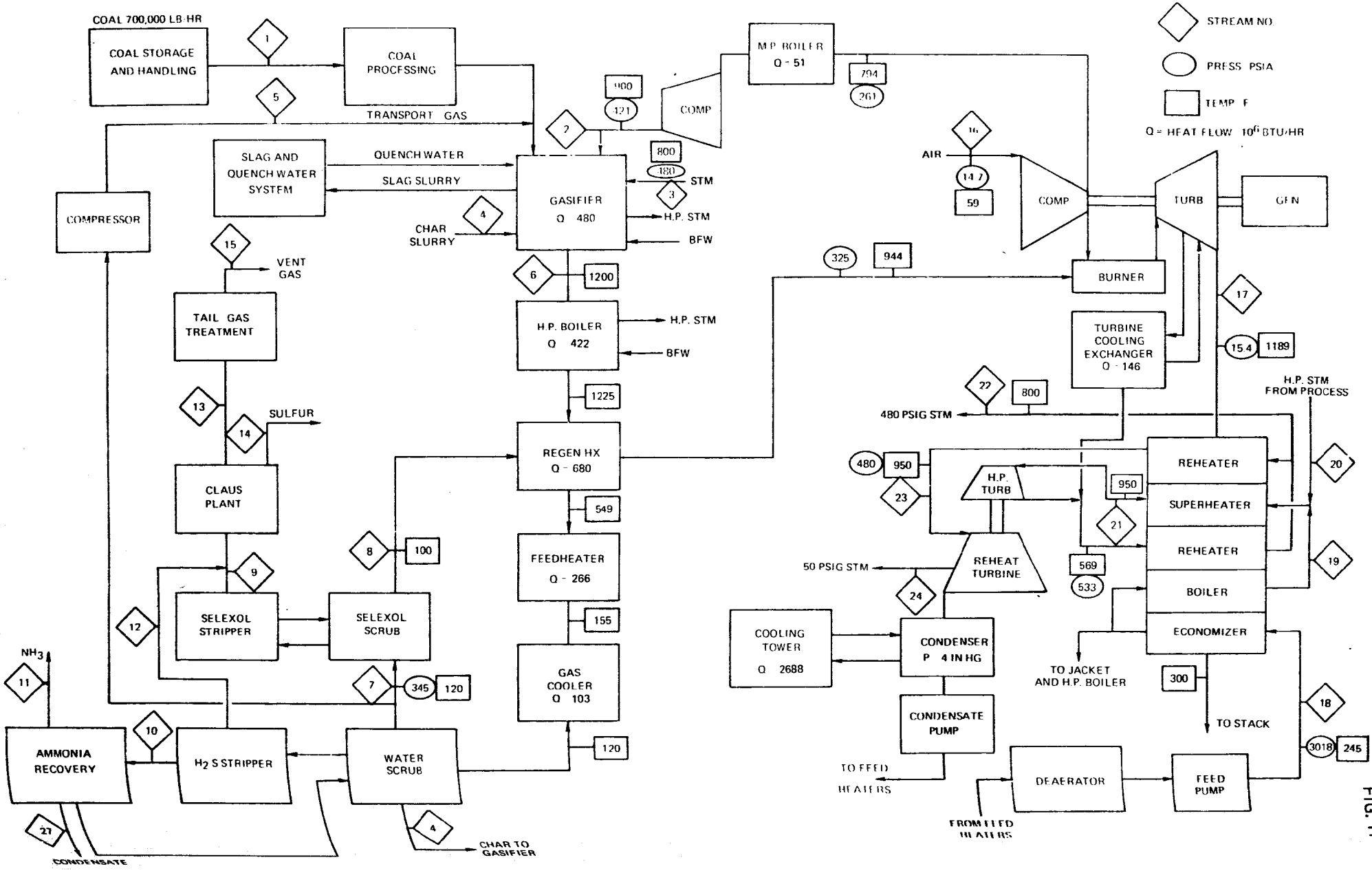


FIG. 11–2

*MATERIAL BALANCE FOR U-GAS/AIR-BLOWN/SELEXOL - LOW STEAM*

| Stream | | 1 | | 2 | | 3 | | 4 | |
|---|---|---|---|---|---|---|---|---|---|
| Comp | M.W. | LB/HR | MOLS/HR | LB/HR | MOLS/HR | LB/HR | MOLS/HR | LB/HR | MOLS/HR |
| $CH_4$ | 16.04 | | | | | | | | |
| $H_2$ | 2.016 | | | | | | | | |
| CO | 28.01 | | | | | | | | |
| $CO_2$ | 44.01 | | | | | | | | |
| $H_2S$ | 34.08 | | | | | | | | |
| COS | 60.07 | | | | | | | | |
| $NH_3$ | 17.03 | | | | | | | | |
| $N_2$ | 28.02 | | | 1,514,078 | 54.036.6 | | | | |
| $O_2$ | 32.00 | | | 459,608 | 14,362.7 | | | | |
| $H_2O$ | 18.02 | | | 31,215 | 1,732.2 | 137,795 | 7646.8 | 256 | |
| Coal | | 700,000 | | | | | | | |
| Char | | | | | | | | 175 | |
| TOTAL | | 700,000 | | 2,004,901 | 70,130.5 | 137,795 | 7646.8 | 431 | |

TABLE 11-4 (Cont'd)

MATERIAL BALANCE FOR U-GAS/AIR-BLOWN/SELEXOL - LOW STEAM

| Stream | | 5 | | 6 | | 7 | | 8 | |
|---|---|---|---|---|---|---|---|---|---|
| Comp | M.W. | LB/HR | MOLS/HR | LB/HR | MOLS/HR | LB/HR | MOLS/HR | LB/HR | MOLS/HR |
| $CH_4$ | 16.04 | 7988 | 49.8 | 59,727 | 3,723.6 | 58,927.8 | 3,673.8 | 58,400 | 3,640.9 |
| $H_2$ | 2.016 | 456 | 226.2 | 34,123 | 16,926. | 33,666.8 | 16,699.8 | 33,616 | 16,674.5 |
| CO | 28.01 | 10,901.5 | 389.2 | 815,815 | 29,125.8 | 804,912.2 | 28,736.6 | 802,240 | 28,641.2 |
| $CO_2$ | 44.01 | 3,410.8 | 77.5 | 256,680 | 5,832.3 | 252,018.9 | 5,726.4 | 211,847 | 4,813.6 |
| $H_2S$ | 34.08 | 347.6 | 10.2 | 26,008 | 763.1 | 25,566.8 | 750.2 | 143 | 4.2 |
| COS | 60.07 | 36.0 | 0.6 | 2,489 | 41.4 | 2,450.9 | 40.8 | 1,604 | 26.7 |
| $NH_3$ | 17.03 | -- | -- | 529 | 31.1 | -- | -- | -- | -- |
| $N_2$ | 28.02 | 20,611.5 | 735.6 | 1,542,584 | 55,052.9 | 1,521,970.7 | 54,317.3 | 1,518,560 | 54,197.0 |
| $H_2O$ | 18.02 | 97.3 | 5.4 | 984 | 3,606.2 | 7,157.5 | 397.2 | 162 | 9.0 |
| TOTAL | | 36,660 | 1,494.5 | 2,802,939 | 115,102.4 | 2,706,670 | 110,342.1 | 2,626,572 | 108,007.1 |

| Stream | | 9 | | 10 | | 11 | | 12 | |
|---|---|---|---|---|---|---|---|---|---|
| Comp | M.W. | LB/HR | MOLS/HR | LB/HR | MOLS/HR | LB/HR | MOLS/HR | LB/HR | MOLS/HR |
| $CH_4$ | 16.04 | 527.7 | 32.9 | | | | | | |
| $H_2$ | 2.016 | 51.0 | 25.3 | | | | | | |
| CO | 28.01 | 2,672.2 | 95.4 | | | | | | |
| $CO_2$ | 44.01 | 40,172.3 | 912.8 | | | | | 1289.5 | 29.3 |
| $H_2S$ | 34.08 | 25,423.7 | 746.0 | | | | | 61.3 | 1.8 |
| COS | 60.07 | 847.0 | 14.1 | | | | | | |
| $NH_3$ | 17.03 | -- | -- | 526.2 | 30.9 | 526.2 | 30.9 | 3.4 | 0.2 |
| $N_2$ | 28.02 | 3,370.8 | 120.3 | | | | | | |
| $H_2O$ | 18.02 | 1,679.5 | 93.2 | 476,699.3 | 26,453.9 | | | 1693.9 | 94.0 |
| TOTAL | | 74,744.2 | 2,040 | 477,225.5 | 26,484.8 | 526.2 | 30.9 | 3048.1 | 125.3 |

*MATERIAL BALANCE FOR U-GAS/AIR-BLOWN/SELEXOL - LOW STEAM*

| Stream | | 13 | | 14 | | 15 | | 16 | |
|---|---|---|---|---|---|---|---|---|---|
| Comp | M.W. | LB/HR | MOLS/HR | LB/HR | MOLS/HR | LB/HR | MOLS/HR | LB/HR | MOLS/HR |
| $CH_4$ | 16.04 | 351.28 | 21.9 | | | 351.3 | 21.9 | | |
| $H_2$ | 2.016 | 34.1 | 16.9 | | | -- | -- | | |
| CO | 28.01 | 1781.4 | 63.6 | | | 1,781.4 | 63.6 | | |
| $CO_2$ | 44.01 | 43,578.7 | 990.2 | | | 44,027.6 | 1,000.4 | | |
| $H_2S$ | 34.08 | 272.6 | 8.0 | | | | 2 ppm | | |
| COS | 60.07 | 636.7 | 10.6 | | | 24 | 0.4 | | |
| $SO_2$ | 64.06 | 595.8 | 9.3 | | | -- | -- | | |
| $NH_3$ | 17.03 | 3.4 | 0.2 | | | 3 | 0.2 | | |
| $N_2$ | 28.02 | 48,062.7 | 1715.3 | | | 48,062.7 | 1,715.3 | 10,606,005 | 376,500 |
| $H_2O$ | 18.02 | 18,423.6 | 1022.4 | | | 3,222.0 | 178.8 | 3,200,640 | 100,020 |
| S | 32.06 | | | 24,471.4 | 763.3 | | | | |
| TOTAL | | 113,740.28 | 3,858.4 | 24,471.4 | 763.3 | 97,472.0 | 2,980.6 | 13,806,645 | 476,520 |

| Stream | | 17 | | 18 | | 19 | | 20 | |
|---|---|---|---|---|---|---|---|---|---|
| Comp | M.W. | LB/HR | MOLS/HR | LB/HR | MOLS/HR | LB/HR | MOLS/HR | LB/HR | MOLS/HR |
| $CH_4$ | 16.04 | | | | | | | | |
| $H_2$ | 2.016 | | | | | | | | |
| CO | 28.01 | | | | | | | | |
| $CO_2$ | 44.01 | 1,632,947 | 37,104 | | | | | | |
| $H_2S$ | 34.08 | | | | | | | | |
| COS | 60.07 | | | | | | | | |
| $NH_3$ | 17.03 | | | | | | | | |
| $N_2$ | 28.02 | 10,409,885 | 369,538 | | | | | | |
| $O_2$ | 32.00 | 1,722,176 | 53,818 | | | | | | |
| $H_2O$ | 18.02 | 431,939 | 23,970 | 2,389,035 | 165,910 | 204,355 | 11,343 | 2,754,773 | 152,907 |
| TOTAL | | 14,186,947 | 484,430 | 2,989,035 | 165,910 | 204,355 | 11,343 | 2,754,773 | 152,907 |

TABLE 11-4 (Cont'd)

MATERIAL BALANCE FOR U-GAS/AIR-BLOWN/SELEXOL - LOW STEAM

| Stream | | 21 | | 22 | | 23 | | 24 | |
|---|---|---|---|---|---|---|---|---|---|
| Comp | M.W. | LB/HR | MOLS/HR | LB/HR | MOLS/HR | LB/HR | MOLS/HR | LB/HR | MOLS/HR |
| $CH_4$ | 16.04 | | | | | | | | |
| $H_2$ | 2.016 | | | | | | | | |
| CO | 28.01 | | | | | | | | |
| $CO_2$ | 44.01 | | | | | | | | |
| $H_2S$ | 34.08 | | | | | | | | |
| COS | 60.07 | | | | | | | | |
| $NH_3$ | 17.03 | | | | | | | | |
| $N_2$ | 28.02 | | | | | | | | |
| $H_2O$ | 18.02 | 3,107,189 | 172,430 | 144,668 | 8,030 | 2,962,488 | 164,400 | 136,381 | 7,570 |
| TOTAL | | 3,107,189 | 172,430 | 144,668 | 8,030 | 2,962,488 | 164,400 | 136,381 | 7,570 |

| Stream | | 25 | | 26 | | 27 | | | |
|---|---|---|---|---|---|---|---|---|---|
| Comp | M.W. | LB/HR | MOLS/HR | LB/HR | MOLS/HR | LB/HR | MOLS/HR | LB/HR | MOLS/HR |
| $CH_4$ | 16.04 | | | | | | | | |
| $H_2$ | 2.016 | | | | | | | | |
| CO | 28.01 | | | | | | | | |
| $CO_2$ | 44.01 | | | | | | | | |
| $H_2S$ | 34.08 | | | | | | | | |
| COS | 60.07 | | | | | | | | |
| $NH_3$ | 17.03 | | | | | | | | |
| $N_2$ | 28.02 | | | | | | | | |
| $H_2O$ | 18.02 | | | | | | | | |
| TOTAL | | | | | | | | | |

## SYSTEM FLOW DIAGRAM BCR/AIR–BLOWN/SELEXOL

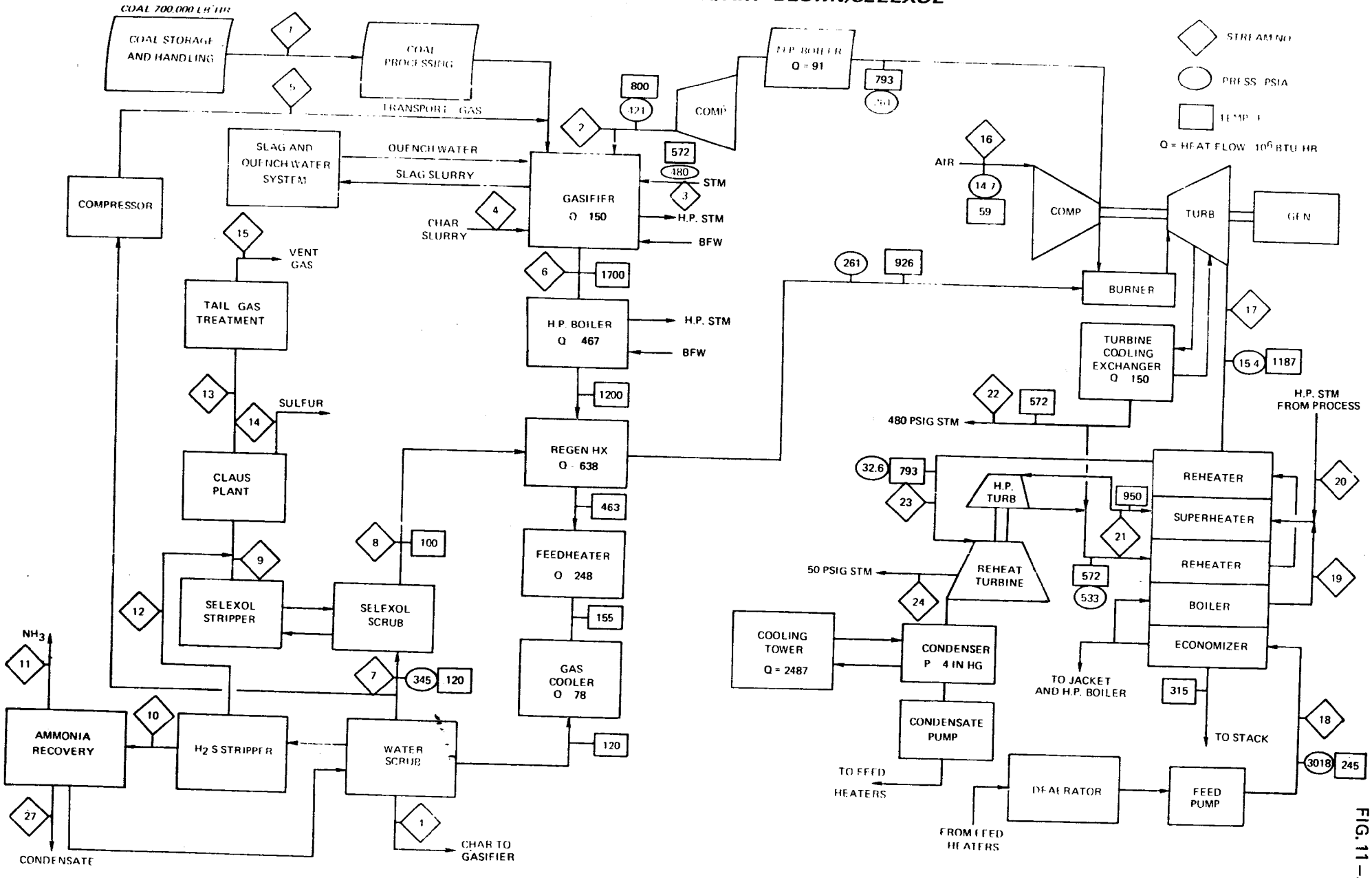


FIG. 11–3

TABLE 11-5

MATERIAL BALANCE FOR BCR/AIR-BLOWN/SELEXOL

| Stream | | 1* | | 2 | | 3 | | 4 | |
|---|---|---|---|---|---|---|---|---|---|
| Comp | M.W. | LB/HR | MOLS/HR | LB/HR | MOLS/HR | LB/HR | MOLS/HR | LB/HR | MOLS/HR |
| $CH_4$ | 16.04 | | | | | | | | |
| $H_2$ | 2.016 | | | | | | | | |
| CO | 28.01 | | | | | | | | |
| $CO_2$ | 44.01 | | | | | | | | |
| $H_2S$ | 34.08 | | | | | | | | |
| COS | 60.07 | | | | | | | | |
| $NH_3$ | 17.03 | | | | | | | | |
| $N_2$ | 28.02 | | | 1,469,803 | 52,455.5 | | | | |
| $O_2$ | 32.00 | | | 446,208 | 13,944.0 | | | | |
| $H_2O$ | 18.02 | | | 10,051 | 557.8 | 120,960 | 6,712.5 | 4,319 | |
| Coal | | 700,000 | | | | | | | |
| Char | | | | | | | | 2,880 | |
| TOTAL | | 700,000 | | 1,926,062 | 66,957.3 | 120,960 | 6,712.5 | 7,199 | |

* Coal is dried to 2 percent moisture prior to firing; flow at the dried condition is 684,286 lb/hr.

*MATERIAL BALANCE FOR BCR/AIR-BLOWN/SELEXOL*

| Stream | | 5 | | 6 | | 7 | | 8 | |
|---|---|---|---|---|---|---|---|---|---|
| Comp | M.W. | LB/HR | MOLS/HR | LB/HR | MOLS/HR | LB/HR | MOLS/HR | LB/HR | MOLS/HR |
| $CH_4$ | 16.04 | 1,391 | 86.7 | 60,551 | 3,775.0 | 59,160 | 3,688.3 | 58,631 | 3,655.3 |
| $H_2$ | 2.016 | 711 | 352.5 | 30,875 | 15,314.9 | 30,164 | 14,962.1 | 30,118 | 14,939.4 |
| CO | 28.01 | 20,753 | 740.9 | 901,631 | 32,189.6 | 880,884 | 31,448.9 | 877,962 | 31,344.6 |
| $CO_2$ | 44.01 | 3,446 | 78.3 | 149,462 | 3,396.1 | 126,273 | 2,869.2 | 106,148 | 2,411.9 |
| $H_2S$ | 34.08 | 596 | 17.5 | 25,594 | 751.0 | 23,968 | 703.2 | 133 | 3.9 |
| COS | 60.07 | 102 | 1.7 | 4,542 | 75.6 | 4,440 | 73.9 | 2,908 | 48.4 |
| $NH_3$ | 17.03 | -- | -- | 8,154 | 478.8 | -- | -- | -- | -- |
| $N_2$ | 28.02 | 34,675 | 1,237.5 | 1,506,167 | 53,753.3 | 1,471,493 | 52,515.8 | 1,468,234 | 52,399.5 |
| $H_2O$ | 18.02 | 139 | 7.7 | 39,871 | 2,212.6 | 5,867 | 325.6 | 153 | 8.5 |
| TOTAL | | 61,813 | 2,522.8 | 2,726,847 | 111,946.9 | 2,602,249 | 106,587.0 | 2,544,287 | 104,811.5 |

| Stream | | 9 | | 10 | | 11 | | 12 | |
|---|---|---|---|---|---|---|---|---|---|
| Comp | M.W. | LB/HR | MOLS/HR | LB/HR | MOLS/HR | LB/HR | MOLS/HR | LB/HR | MOLS/HR |
| $CH_4$ | 16.04 | 529 | 33.0 | | | | | | |
| $H_2$ | 2.016 | 46 | 22.7 | | | | | | |
| CO | 28.01 | 2,927 | 104.5 | | | | | | |
| $CO_2$ | 44.01 | 20,126 | 457.3 | | | | | 19,743 | 448.6 |
| $H_2S$ | 34.08 | 23,836 | 699.4 | | | | | 1,029 | 30.2 |
| COS | 60.07 | 1,532 | 25.5 | | | | | | |
| $NH_3$ | 17.03 | -- | -- | 8,104 | 475.8 | 8,029 | 471.4 | 51 | 3.0 |
| $N_2$ | 28.02 | 3,259 | 116.3 | | | | | | |
| $H_2O$ | 18.02 | 5,714 | 317.1 | 374,220 | 20,766.9 | | | 26,048 | 1,445.5 |
| TOTAL | | 57,969 | 1,775.8 | 382,324 | 21,242.7 | 8,029 | 471.4 | 46,871 | 1,927.3 |

TABLE 11-5 (Cont'd)

MATERIAL BALANCE FOR BCR/AIR-BLOWN/SELEXOL

| Stream | | 13 | | 14 | | 15 | | 16 | |
|---|---|---|---|---|---|---|---|---|---|
| Comp | M.W. | LB/HR | MOLS/HR | LB/HR | MOLS/HR | LB/HR | MOLS/HR | LB/HR | MOLS/HR |
| $CH_4$ | 16.04 | 353 | 22.0 | | | 353 | 22.0 | | |
| $H_2$ | 2.016 | 30 | 15.1 | | | -- | -- | | |
| CO | 28.01 | 1,949 | 69.6 | | | 1,045 | 37.3 | | |
| $CO_2$ | 44.01 | 42,258 | 960.2 | | | 44,388 | 1,008.6 | | |
| $H_2S$ | 34.08 | 498 | 14.6 | | | -- | 2 ppm | | |
| COS | 60.07 | 1,021 | 17.0 | | | 48 | 0.8 | | |
| $SO_2$ | 64.06 | 1,012 | 15.8 | | | -- | -- | | |
| $NH_3$ | 17.03 | 32 | 1.9 | | | 32 | 1.9 | | |
| $N_2$ | 28.02 | 47,673 | 1,701.4 | | | 47,673 | 1,701.4 | 10,875,282 | 386,059 |
| $O_2$ | 32.00 | | | | | | | 3,281,920 | 102,560 |
| $H_2O$ | 18.02 | 45,203 | 2,508.5 | | | 3,179 | 176.4 | | |
| S | 32.06 | | | 24,178 | 754.1 | | | | |
| TOTAL | | 140,029 | 5,326.1 | 24,178 | 754.1 | 96,718 | 2,948.4 | 14,157,202 | 488,619 |

| Stream | | 17 | | 18 | | 19 | | 20 | |
|---|---|---|---|---|---|---|---|---|---|
| Comp | M.W. | LB/HR | MOLS/HR | LB/HR | MOLS/HR | LB/HR | MOLS/HR | LB/HR | MOLS/HR |
| $CH_4$ | 16.04 | | | | | | | | |
| $H_2$ | 2.016 | | | | | | | | |
| CO | 28.01 | | | | | | | | |
| $CO_2$ | 44.01 | 1,647,910 | 37,444 | | | | | | |
| $H_2S$ | 34.08 | | | | | | | | |
| COS | 60.07 | | | | | | | | |
| $SO_2$ | 64.06 | | | | | | | | |
| $NH_3$ | 17.03 | | | | | | | | |
| $N_2$ | 28.02 | 10,686,064 | 379,342 | | | | | | |
| $O_2$ | 32.00 | 1,803,264 | 56,352 | | | | | | |
| $H_2$ | 18.02 | 401,432 | 22,277 | 2,827,338 | 156,900 | 808,917 | 44,890 | 1,990,128 | 110,440 |
| S | 32.06 | | | | | | | | |
| TOTAL | | 14,538,670 | 495,415 | 2,827,338 | 156,900 | 802,115 | 44,522 | 1,983,007 | 110.068 |

MATERIAL BALANCE FOR BCR/AIR-BLOWN/SELEXOL

| Comp | Stream M.W. | 21 LB/HR | 21 MOLS/HR | 22 LB/HR | 22 MOLS/HR | 23 LB/HR | 23 MOLS/HR | 24 LB/HR | 24 MOLS/HR |
|---|---|---|---|---|---|---|---|---|---|
| $CH_4$ | 16.04 | | | | | | | | |
| $H_2$ | 2.016 | | | | | | | | |
| CO | 28.01 | | | | | | | | |
| $CO_2$ | 44.01 | | | | | | | | |
| $H_2S$ | 34.08 | | | | | | | | |
| COS | 60.07 | | | | | | | | |
| $SO_2$ | 64.06 | | | | | | | | |
| $NH_3$ | 17.03 | | | | | | | | |
| $N_2$ | 28.02 | | | | | | | | |
| $O_2$ | 32.00 | | | | | | | | |
| $H_2O$ | 18.02 | 2,750,392 | 152,630 | 199,661 | 11,080 | 2,750,392 | 152,630 | 202,500 | 11,240* |
| S | 32.06 | | | | | | | | |
| TOTAL | | | | | | | | | |

* Includes steam for deaerator

# SYSTEM FLOW DIAGRAM BCR/OXYGEN–BLOWN/ SELEXOL

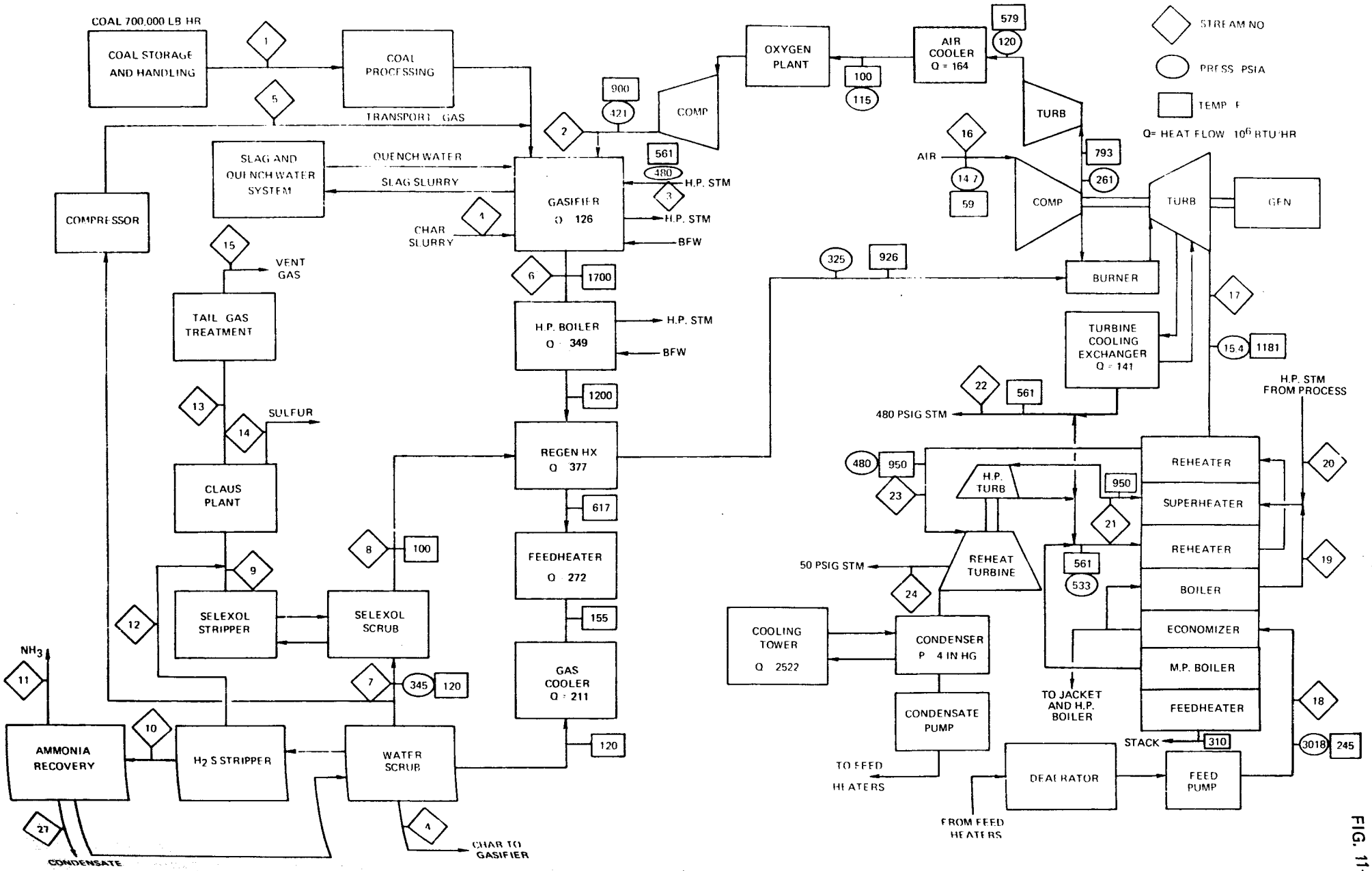


FIG. 11-4

*MATERIAL BALANCE FOR BCR/OXYGEN BLOWN/SELEXOL*

| Stream | | 1* | | 2 | | 3 | | 4 | |
|---|---|---|---|---|---|---|---|---|---|
| Comp | M.W. | LB/HR | MOLS/HR | LB/HR | MOLS/HR | LB/HR | MOLS/HR | LB/HR | MOLS/HR |
| $CH_4$ | 16.04 | | | | | | | | |
| $H_2$ | 2.016 | | | | | | | | |
| CO | 28.01 | | | | | | | | |
| $CO_2$ | 44.01 | | | | | | | | |
| $H_2S$ | 34.08 | | | | | | | | |
| COS | 60.07 | | | | | | | | |
| $NH_3$ | 17.03 | | | | | | | | |
| $N_2$ | 28.02 | | | 7,302 | 260.6 | | | | |
| $O_2$ | 32.00 | | | 408,627 | 12,769.6 | | | | |
| $H_2O$ | 18.02 | | | | | 418,320 | 23,214.2 | 3,667 | |
| Coal | | 700,000 | | | | | | | |
| Char | | | | | | | | 2,445 | |
| TOTAL | | 700,000 | | 415,929 | 13,030.2 | 418,320 | 23,214.2 | 6,112 | |

* Coal is dried to 2 percent moisture prior to firing; flow at the dried condition is 684,286 lb/hr.

TABLE 11-6 (Cont'd)

MATERIAL BALANCE FOR BCR/OXYGEN BLOWN/SELEXOL

| Stream | | 5 | | 6 | | 7 | | 8 | |
|---|---|---|---|---|---|---|---|---|---|
| Comp | M.W. | LB/HR | MOLS/HR | LB/HR | MOLS/HR | LB/HR | MOLS/HR | LB/HR | MOLS/HR |
| $CH_4$ | 16.04 | 3,407 | 212.4 | 72,531 | 4,521.9 | 69,120 | 4,309.2 | 68,500 | 4,270.6 |
| $H_2$ | 2.016 | 2,093 | 1,038.2 | 44,549 | 22,097.6 | 42,456 | 21,059.4 | 42,391 | 21,027.4 |
| CO | 28.01 | 34,814 | 1,242.9 | 741,108 | 26,458.7 | 706,297 | 25,215.9 | 703,947 | 25,132.0 |
| $CO_2$ | 44.01 | 19,364 | 440.0 | 412,356 | 9,369.6 | 372,276 | 8,458.8 | 312,933 | 7,100.5 |
| $H_2S$ | 34.08 | 1,237 | 36.3 | 26,255 | 770.4 | 23,938 | 702.4 | 133 | 3.9 |
| COS | 60.07 | 210 | 3.5 | 4,620 | 76.9 | 4,404 | 73.3 | 2,884 | 48.0 |
| $NH_3$ | 17.03 | -- | -- | 8,561 | 502.7 | -- | -- | -- | -- |
| $N_2$ | 28.02 | 446 | 15.9 | 9,426 | 336.4 | 8,980 | 320.5 | 8,961 | 319.8 |
| $H_2O$ | 18.02 | 191 | 10.6 | 194,380 | 10,786.9 | 3,896 | 216.2 | 85 | 4.7 |
| TOTAL | | 61,762 | 2,999.8 | 1,513,786 | 74,921.1 | 1,231,367 | 60,355.7 | 1,139,834 | 57,916.9 |

| Stream | | 9 | | 10 | | 11 | | 12 | |
|---|---|---|---|---|---|---|---|---|---|
| Comp | M.W. | LB/HR | MOLS/HR | LB/HR | MOLS/HR | LB/HR | MOLS/HR | LB/HR | MOLS/HR |
| $CH_4$ | 16.04 | 619 | 38.6 | | | | | | |
| $H_2$ | 2.016 | 65 | 32.0 | | | | | | |
| CO | 28.01 | 2,350 | 83.9 | | | | | | |
| $CO_2$ | 44.01 | 59,339 | 1,348.3 | | | | | 20,720 | 470.8 |
| $H_2S$ | 34.08 | 23,805 | 698.5 | | | | | 1,080 | 31.7 |
| COS | 60.07 | 1,520 | 25.3 | | | | | | |
| $NH_3$ | 17.03 | -- | -- | 8,508 | 499.6 | 8,455 | 496.5 | 53 | 3.1 |
| $N_2$ | 28.02 | 20 | 0.7 | | | | | | |
| $H_2O$ | 18.02 | 3,811 | 211.5 | 266,700 | 14,800.2 | | | 27,338 | 1,517.1 |
| TOTAL | | 91,529 | 2,438.8 | 275,208 | 15,299.8 | 8,455 | 496.5 | 49,191 | 2,022.7 |

| Stream | | 13 | | 14 | | 15 | | 16 | |
|---|---|---|---|---|---|---|---|---|---|
| Comp | M.W. | LB/HR | MOLS/HR | LB/HR | MOLS/HR | LB/HR | MOLS/HR | LB/HR | MOLS/HR |
| $CH_4$ | 16.04 | 414 | 25.8 | | | 414 | 25.8 | | |
| $H_2$ | 2.016 | 43 | 21.3 | | | -- | -- | | |
| CO | 28.01 | 1,566 | 55.9 | | | 852 | 30.4 | | |
| $CO_2$ | 44.01 | 82,224 | 1,868.3 | | | 84,055 | 1,909.9 | | |
| $H_2S$ | 34.08 | 498 | 14.6 | | | -- | 2 ppm | | |
| COS | 60.07 | 1,015 | 16.9 | | | 48 | 0.8 | | |
| $SO_2$ | 64.06 | 999 | 15.6 | | | -- | -- | | |
| $NH_3$ | 17.03 | 36 | 2.1 | | | 36 | 2.1 | | |
| $N_2$ | 28.02 | 44,644 | 1,593.3 | | | 44,633 | 1,592.9 | 11,930,663 | 425,791 |
| $O_2$ | 32.00 | | | | | | | 3,619,840 | 113,120 |
| $H_2O$ | 18.02 | 44,726 | 2,482.0 | | | 4,087 | 226.8 | | |
| S | 32.06 | | | 24,192 | 754.6 | | | | |
| TOTAL | | 176,165 | 6,095.8 | 24,192 | 754.6 | 134,125 | 3,788.7 | 15,550,503 | 538,911 |

| Stream | | 17 | | 18 | | 19 | | 20 | |
|---|---|---|---|---|---|---|---|---|---|
| Comp | M.W. | LB/HR | MOLS/HR | LB/HR | MOLS/HR | LB/HR | MOLS/HR | LB/HR | MOLS/HR |
| $CH_4$ | 16.0 | | | | | | | | |
| $H_2$ | 2.016 | | | | | | | | |
| CO | 28.01 | | | | | | | | |
| $CO_2$ | 44.01 | 1,608,389 | 36,546 | | | | | | |
| $H_2S$ | 34.08 | | | | | | | | |
| COS | 60.07 | | | | | | | | |
| $SO_2$ | 64.06 | | | | | | | | |
| $NH_3$ | 17.03 | | | | | | | | |
| $N_2$ | 28.02 | 10,387,630 | 370,722 | | | | | | |
| $O_2$ | 32.00 | 2,135,328 | 66,729 | | | | | | |
| $H_2$ | 18.02 | 533,554 | 29,609 | 2,877,073 | 159,660 | 1,106,428 | 61,400 | 1,527,915 | 84,790 |
| S | 32.06 | | | | | | | | |
| TOTAL | | 13,056,512 | 467,060 | 2,877,073 | 159,660 | 1,106,428 | 61,400 | 1,527,915 | 84,790 |

TABLE 11-6 (Cont'd)

MATERIAL BALANCE FOR BCR/OXYGEN BLOWN/SELEXOL

| Stream | | 21 | | 22 | | 23 | | 24 | |
|---|---|---|---|---|---|---|---|---|---|
| Comp | M.W. | LB/HR | MOLS/HR | LB/HR | MOLS/HR | LB/HR | MOLS/HR | LB/HR | MOLS/HR |
| $CH_4$ | 16.04 | | | | | | | | |
| $H_2$ | 2.016 | | | | | | | | |
| CO | 28.01 | | | | | | | | |
| $CO_2$ | 44.01 | | | | | | | | |
| $H_2S$ | 34.08 | | | | | | | | |
| COS | 60.07 | | | | | | | | |
| $SO_2$ | 64.06 | | | | | | | | |
| $NH_3$ | 17.03 | | | | | | | | |
| $N_2$ | 28.02 | | | | | | | | |
| $O_2$ | 32.00 | | | | | | | | |
| $H_2O$ | 18.02 | 2,517,935 | 139,730 | 496,992 | 27,580 | 2,517,935 | 139,730 | 61,448 | 3,410 |
| S | 32.06 | | | | | | | | |
| TOTAL | | 2,517,935 | 139,730 | 496,992 | 27,580 | 2,517,935 | 139,730 | 61,448 | 3,410 |

*TABLE 11-7*

UTILITIES - U-GAS/SELEXOL/AIR-BLOWN

| | Coal Preparation | Gasification | Gas Scrubbing & Gas Cooling | Acid Gas Removal | Ammonia Recovery | Sulfur Recovery | Total |
|---|---|---|---|---|---|---|---|
| Steam #/hr | | | | | | | |
| 420 psig (sat) | | 390,030 | | | 6,900 | | 396,930 |
| 100 psig (sat) | | | | | | | |
| 50 psig (sat) | | | | 143,300 | 55,700 | (54,600) | 144,400 |
| Power - kW | 2,500 | 810 | 225 | 22,765 | 575 | 1,060 | 27,935 |
| Cooling Water - gpm | | | 32,680 | 30,240 | 805 | 125 | 34,730 |
| Cooling Duty MMBtu/hr | | | 326.8 | 302.4 | 805 | 125 | 638.5 |

TABLE 11-8

UTILITIES - U-GAS/SELEXOL/AIR-BLOWN - LOW STEAM

| | Coal Preparation | Gasification | Gas Scrubbing & Cooling | Acid Gas Removal | Ammonia Recovery | Sulfur Recovery | Total |
|---|---|---|---|---|---|---|---|
| Steam #/hr | | | | | | | |
| 420 psig (sat) | | 137,795 | | | 6,900 | | 144,695 |
| 100 psig (sat) | | | | | | | |
| 50 psig (sat) | | | | 135,400 | 55,700 | (54,600) | 136,500 |
| Power - kW | 2,500 | 810 | 225 | 21,500 | 575 | 1,060 | 26,670 |
| Cooling Water - gpm | | | 10,300 | 28,600 | 805 | 125 | 33,090 |
| Cooling Duty MMBtu/hr | | | 103 | 286.0 | 8 | 1.3 | 434.9 |

*UTILITIES BCR/SELEXOL - AIR-BLOWN*

Coal Feed - 700,000 #/hr Ill. #6

| | Coal Preparation | Gasification | Gas Scrubbing & Cooling | Acid Gas Removal | Ammonia Recovery | Sulfur Recovery | Total |
|---|---|---|---|---|---|---|---|
| Steam #/hr | | | | | | | |
| 420 psig (sat) | | 121,000 | | | 78,700 | | 199,700 |
| 50 psig (sat) | | | | 131,500 | 54,000 | (54,600) | 130,900 |
| Power - kW | 4,360 | 1,960 | 80 | 20,400 | 1,850 | 1,060 | 29,710 |
| Cooling Water - gpm | | 5,480 | 7,800 | 27,770 | 650 | 125 | 36,560 |
| Cooling Duty MMBtu/hr | | | 78 | 277.7 | 6.5 | 1.3 | 347.7 |

TABLE 11-10

UTILITIES BCR/SELEXOL - OXYGEN-BLOWN

| | Coal Preparation | Gasification | Gas Scrubbing & Cooling | Acid Gas Removal | Ammonia Recovery | Sulfur Recovery | Total |
|---|---|---|---|---|---|---|---|
| Steam #/hr | | | | | | | |
| 420 psig (sat) | | 418,320 | | | 78,700 | | 497,020 |
| 50 psig (sat) | | | | 74,800 | 41,200 | (54,600) | 61,400 |
| Power - kW | 4,360 | 1,260 | 80 | 11,930 | 1,850 | 1,060 | 20,540 |
| Cooling Water - gpm | | 5,480 | 21,100 | 15,800 | 290 | 125 | 24,590 |
| Cooling Duty MMBtu/hr | | | 211 | 158 | 2.9 | 1.3 | 373.3 |

to separate the $H_2S$ and recover the ammonia for possible use as a byproduct. Both low- and reheat-pressure steam are required by the Phosam process (see Appendix A). A concentrated slurry of char recovered from the particulate scrubber is returned to the gasifier and recycled to extinction.

Gas leaving the water wash is sent to the Selexol acid-gas removal system. Operation of that unit is also described in Section 6. Steam bled from the power system is used in the stripper. Acid gas from the Selexol stripper varies between 24 and 40 percent in $H_2S$ concentration, the particular value being a direct function of the amount of $CO_2$ in the fuel gas. A small percentage of the $CO_2$ (.16 percent) is absorbed and finds its way into the acid gas. To this stream is added the $H_2S$ recovered from the water scrub and the combined total is sent to the Claus plant for sulfur recovery. Low-pressure steam is raised in the burner and sulfur condensers of that process. The operational details of the Claus plant and Beavon tail gas cleanup process are as given in Section 6. Nearly all of the sulfur is recovered and emissions from this part of the process are relatively insignificant.

The clean fuel gas exiting the Selexol process is reheated to approximately 925 F by heat exchange with the raw gas and delivered to the gas turbine fuel control.

The major source of heat for the steam cycle is the waste heat recovery boiler, although some steam is raised at reheat pressure by heat exchange with the turbine cooling air. In this case, boiler is a misnomer in that virtually all the steam is raised in the gasifier jacket and/or the heat recovery boiler in the gasifier exit stream.

The reheater is shown in two sections. This minimizes the pinch problem that would occur in the downstream unit of a series of combinations of reheater and superheater. An alternative is to arrange them in parallel in the gas flowstream. In this arrangement, reheat-pressure stream is available at bleed temperature, reheat temperature or an intermediate temperature as required for the gasifier. In the air-blown systems, very little, if any, steam is raised in the waste heat boiler in the gas turbine exhaust. However, in the oxygen-blown system, the smaller fuel gas flow rate results in reduced quantities of heat and, therefore, less steam is available from the waste heat boiler. In this system, it is necessary to raise both high- and reheat-pressure steam in the gas turbine exhaust waste heat boiler. This is done in order to utilize all of the available heat in the exhaust stream. As a result, temperature differences are as small as practical, making for a larger and more complex heat exchanger. This shows up in steam cycle cost for the oxygen-blown system. (It is possible that slight modifications in the steam cycle could reduce the size of the waste heat boiler but the changes would not materially affect study conclusions.)

The steam turbine is conventional in all respects except for bleed provisions. Because of the large amount of waste heat available from the process and gas turbine exhaust, bleed for feedwater heating is unnecessary. The condenser pressure of 4 in. Hg is compatible with cooling tower use. In general, the combined cycle is not very sensitive to condenser pressure and a higher

level could be helpful if it were desired to reduce water use rate in the cooling tower.

As expected, the two air-blown systems with low steam feed rates had similar (.443 and .439) efficiencies. The U-Gas system with high steam feed was over one point less and the oxygen-blown system approximately two points less.

Molten Salt System

With the exception of the fuel processing system, operation is quite similar to the other low-temperature systems. Both gasifier and fuel processing systems are described in Section 6. The system flow diagram is shown in Figure 11-5 the material balance in Table 11-11 and utility requirements in Table 11-12.

The molten salt gasifier does not require steam feed. However, the salt recovery process needs 200 psi steam for calcination of the sodium bicarbonate. Also, some low-pressure steam is used to preheat the sodium carbonate solution prior to entering the $CO_2$-$H_2S$ absorber. This steam is raised in the Claus plant. Also, part of the calciner steam requirement is raised in the Claus plant. The remainder is raised by heat exchange with the turbine cooling air and superheated in the waste heat boiler. Some of that steam is used for the feedwater pump drive.

A further difference between the molten salt and the other low-temperature systems results from the fact that the fuel gas is not cooled below its dew point. In the Selexol systems, the lower heat capacity of the dry gas on the cold side of the regenerative heat exchanger results in an elevated exit temperature on the hot side with the remainder of the sensible heat used for feedwater heating. In this system, it was necessary to use some of the heat from the gas turbine exhaust waste heat boiler for feedwater heating. This increased the temperature differences in this waste heat boiler thereby reducing boiler size and cost. Quite possibly, a slight improvement in efficiency could be achieved by the use of regenerative feedwater heating up to 250 F. However, it would not materially affect the results or conclusions of the study.

High-Temperature Systems

The three systems using Conoco desulfurization are shown in Figures 11-6, 11-7, and 11-8. Material balances are given in Tables 11-13, 11-14, and 11-15 and utility requirements in Tables 11-16, 11-17, and 11-18. The same differences between air- and oxygen-blown systems appear here as in the low-temperature systems. While all systems required the use of the gas turbine exhaust waste heat boiler for feedwater heating, the oxygen-blown design again proved more difficult and a stack temperature lower than 318 F was not achievable.

The fuel gas flow path for these systems is quite simple. Raw gas from the gasifier goes directly to the desulfurizer except in the air-blown BCR case. There, the desulfurizer cannot operate above 1600 F due to the low $CO_2$ partial pressure in the gas stream. (The temperature limitation of 1000 F is to prevent calcining of the absorbant during desulfurization.) In that system

# MOLTEN SALT SYSTEM FLOW DIAGRAM

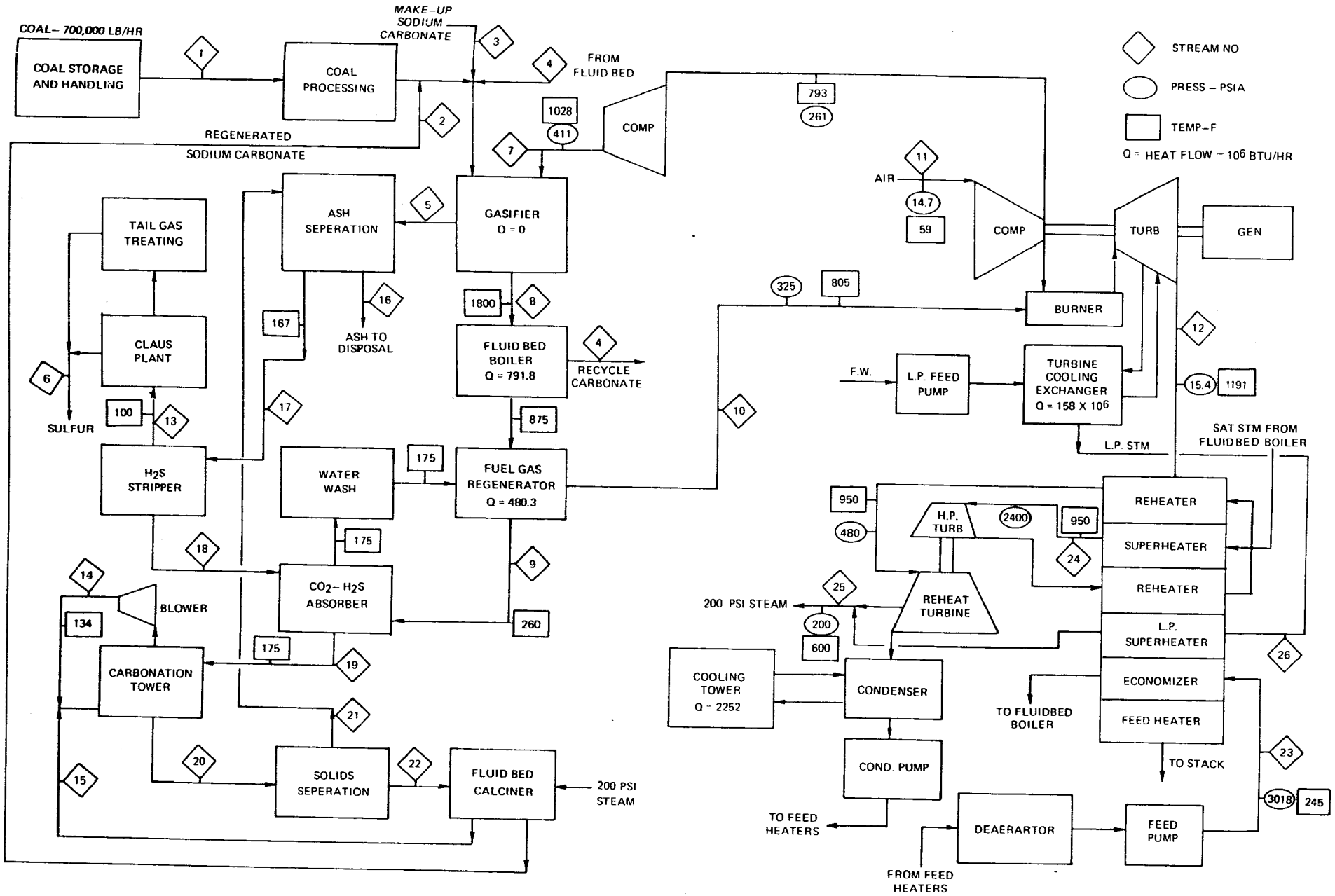


FIG. 11–5

TABLE 11-11

MOLTEN SALT SYSTEM

| Stream | 1 | 2 | 3 | 4 | 5 | 6 |
|---|---|---|---|---|---|---|
| Component | LB/HR | LB/HR | LB/HR | LB/HR | LB/HR | LB/HR |
| Coal - as rec'd | 700,000 | | | | | |
| Na CO | | 169,565 | 30,730 | 2,606 | 128,682 | |
| Na S | | 482 | | | 44,548 | |
| NaOH | | | | | 8,885 | |
| Ash | | | | | 72,590 | |
| Sand | | | | 64 | 64 | |
| Sulfur | | | | | | 19,616 |
| Total Solids and Melt | 700,000 | 170,047 | 30,730 | 2,670 | 254,769 | 19,616 |

*TABLE 11-11 (Cont'd)*

*MOLTEN SALT SYSTEM*

| Stream | | 7 | | 8 | | 9 | | 10 | |
|---|---|---|---|---|---|---|---|---|---|
| Comp | M.W. | LB/HR | MOLS/HR | LB/HR | MOLS/HR | LB/HR | MOLS/HR | LB/HR | MOLS/HR |
| $CH_4$ | 16.04 | | | 25,585.4 | 1,595.1 | 25,585.4 | 1,595.1 | 25,585.4 | 1,595.1 |
| $H_2$ | 2.016 | | | 29,333.0 | 14,649.3 | 29,533.0 | 14,649.3 | 29,533.0 | 14,649.3 |
| CO | 28.01 | | | 843,101. | 30,100.0 | 843,101.0 | 30,100.0 | 843,101.0 | 30,100.0 |
| $CO_2$ | 44.01 | | | 144,040.3 | 3,272.9 | 144,040.3 | 3,272.9 | 101,487.1 | 2,306.0 |
| $H_2S$ | 34.08 | | | 3,558.0 | 104.4 | 3,558.0 | 104.4 | 603.2 | 17.7 |
| COS | 60.07 | | | 426.5 | 7.1 | 426.5 | 7.1 | 426.5 | 7.1 |
| $SO_2$ | 64.06 | | | | | | | | |
| $N_2$ | 28.02 | 1,506,988 | 53,782.6 | 1,513,968.2 | 54,031.7 | 1,513,968.2 | 54,031.7 | 1,513,968.2 | 54,031.7 |
| $O_2$ | 32.0 | 457,504 | 14,297. | | | | | | |
| $H_2O$ | 18.02 | | | 44,958.1 | 2,494.9 | 44,958.1 | 2,494.9 | 29,365.4 | 1,629.6 |
| $Na_2CO_3$ | 105.99 | | | 2,607.4 | 24.6 | | | | |
| TOTAL | | 1,964,492 | 68,079.6 | 2,607,770.9 | 106,280.0 | 2,605,170.5 | 106,255.4 | 2,544,069.8 | 104,336.5 |

| Stream | | 11 | | 12 | | 13 | | 14 | |
|---|---|---|---|---|---|---|---|---|---|
| Comp | M.W. | LB/HR | MOLS/HR | LB/HR | MOLS/HR | LB/HR | MOLS/HR | LB/HR | MOLS/HR |
| $CH_4$ | 16.04 | | | | | | | | |
| $H_2$ | 2.016 | | | | | | | | |
| CO | 28.01 | | | | | | | | |
| $CO_2$ | 44.01 | | | 1,468,129.6 | 33,768. | 11,072.9 | 251.6 | 1,064,865.9 | 24,196. |
| $H_2S$ | 34.08 | | | | | 20,891. | 613.0 | 35,170.6 | 1,032. |
| COS | 60.07 | | | | | | | | |
| $SO_2$ | 64.06 | | | 1,588.7 | 24.8 | | | | |
| $N_2$ | 28.02 | 9,157,269 | 326,812 | 9,006,048.3 | 321,415. | 350.25 | 12.5 | 64,530.1 | 2,303.0 |
| $O_2$ | 32.0 | 2,780,040 | 86,876 | 1,448,960.0 | 45,280. | 105.6 | 3.3 | 19,590.4 | 612.2 |
| $H_2O$ | 18.02 | | | 365,247.4 | 20,269. | 17,823.6 | 989.1 | 1,817,497.2 | 1,008.6 |
| $Na_2CO_3$ | 105.99 | | | | | | | | |
| TOTAL | | 11,937,309 | 413,688.2 | 12,307,973. | 420,756.8 | 50,243.35 | 1,869.5 | 1,202,331.9 | 29,151.8 |

TABLE 11-11 (Cont'd)

MOLTEN SALT SYSTEM

| Stream | | 15 | |
|---|---|---|---|
| Comp | M.W. | LB/HR | MOLS/HR |
| $CH_4$ | 16.04 | | |
| $H_2$ | 2.016 | | |
| CO | 28.01 | | |
| $CO_2$ | 44.01 | 68,888.9 | 1,565.3 |
| $H_2S$ | 34.08 | 211.3 | 6.2 |
| COS | 60.07 | | |
| $SO_2$ | 64.06 | | |
| $N_2$ | 28.02 | 350.25 | 12.5 |
| $O_2$ | 32.0 | 105.6 | 3.3 |
| $H_2O$ | 18.02 | | |
| $Na_2CO_3$ | 105.99 | | |
| TOTAL | | 69,556.05 | 1,587.3 |

| Stream | | 16 | | 17 | | 18 | | 19 | |
|---|---|---|---|---|---|---|---|---|---|
| Comp | M.W. | LB/HR | MOLS/HR | LB/HR | MOLS/HR | LB/HR | MOLS/HR | LB/HR | MOLS/HR |
| $Na_2CO_3$ | 105.99 | 4,840 | 45.67 | 244,303 | 2,304.9 | 321,422 | 3,032.6 | 209,747 | 1,978.9 |
| $NaHCO_3$ | 84.01 | 9,873 | 117.5 | 136,922 | 1,629.83 | 65,696 | 782 | 235,439 | 2,802.5 |
| NaHS | 56.06 | 2,150 | 38.35 | 66,868 | 1,192.79 | 32,817 | 585.4 | 37,677 | 672 |
| $H_2O$ | 18.02 | 81,388 | 4,516.5 | 1,814,112 | 100,672.14 | 1,760,601 | 97,702.6 | 1,758,770 | 97,600.9 |
| TOTAL | | 98,251 | 4,718.02 | 2,262,205 | 105,799.66 | 2,180,536 | 102,102.6 | 2,241,633 | 107,835.7 |

*TABLE 11-11 (Cont'd)*

MOLTEN SALT SYSTEM

| Stream | | 20 | | 21 | | 22 | | 23 | |
|---|---|---|---|---|---|---|---|---|---|
| Comp. | M.W. | LB/HR | MOLS/HR | LB/HR | MOLS/HR | LB/HR | MOLS/HR | LB/HR | MOLS/HR |
| $Na_2CO_3$ | 105.99 | 57,716 | 544.5 | 56,656 | 534.5 | 1,060 | 10.00 | | |
| $NaHCO_3$ | 84.01 | 217,397 | 2,587.8 | 213,406 | 2,540.2 | 3,991 | 47.50 | | |
| NaHS | 56.06 | 37,708 | 672.6 | 37,016 | 660.3 | 693 | 12.36 | | |
| $H_2O$ | 18.02 | 1,611,046 | 89,403.2 | 1,581,471 | 87,762 | 29,575 | 1,641.23 | 2,428,766 | 134,781.7 |
| TOTAL | | 1,923,867 | 93,208.1 | 1,888,549 | 91,497 | 35,319 | 1,711.09 | | |

| Stream | | 24 | | 25 | | 26 | |
|---|---|---|---|---|---|---|---|
| Comp. | M.W. | LB/HR | MOLS/HR | LB/HR | MOLS/HR | LB/HR | MOLS/HR |
| $Na_2CO_3$ | 105.99 | | | | | | |
| $NaHCO_3$ | 84.01 | | | | | | |
| NaHS | 56.06 | | | | | | |
| $H_2O$ | 18.02 | 2,404,456 | 133,432.6 | 619,927 | 34,402.2 | 128,030 | 7,104.9 |

TABLE 11-12

UTILITY SUMMARY - MOLTEN SALT SYSTEM

| | Coal Handling | Gasification & Gas Cleanup | Ash Removal Salt Recovery | Sulfur Recovery | Total |
|---|---|---|---|---|---|
| Steam = lb/hr, 200 psi | - | | 182,700 | (37,800) | 144,900 |
| 50 psi | - | | 11,400 | (11,400) | - |
| Power - kW | 2,500 | 100 | 12,200 | 850 | 15,650 |
| Cooling Water - GPM | | | 40,100 | 120 | 40,220 |
| Cooling Duty - MMBtu/hr | | | 401 | 1.2 | 402 |
| Make-up $Na_2CO_3$ - TPD | | 369 | | | 369 |

# SYSTEM FLOW DIAGRAM U–GAS/ LOW STEAM/ CONOCO

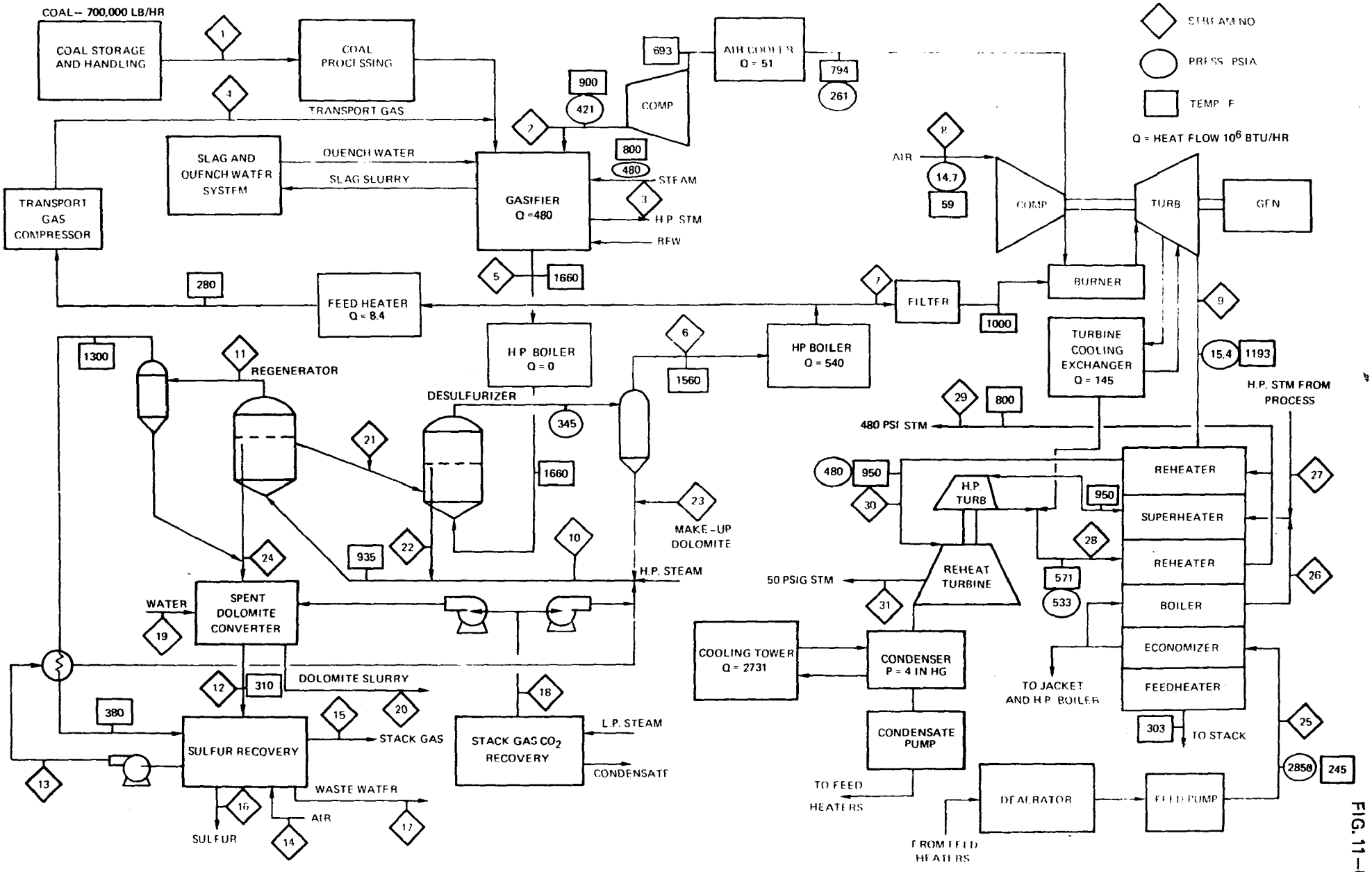


FIG. 11–6

TABLE 11-13

MATERIAL BALANCE FOR U-GAS/LOW STEAM/CONOCO

| Stream | | 1 | | 2 | | 3 | |
|---|---|---|---|---|---|---|---|
| Comp. | M.W. | LB/HR | MOLS/HR | LB/HR | MOLS/HR | LB/HR | MOLS/HR |
| $CH_4$ | 16.04 | | | | | | |
| $H_2$ | 2.016 | | | | | | |
| CO | 28.01 | | | | | | |
| $CO_2$ | 44.01 | | | | | | |
| $H_2S$ | 34.08 | | | | | | |
| COS | 60.07 | | | | | | |
| $NH_3$ | 17.03 | | | | | | |
| $N_2$ | 28.02 | | | 1,514,078 | 54,035.6 | | |
| $O_2$ | 32.00 | | | 459,608 | 14,362.7 | | |
| $H_2O$ | 18.02 | | | 31,215 | 1,732.2 | 137,795 | 7,646.8 |
| Coal Char | | 700,000 | | | | | |
| TOTAL | | 700,000 | | 2,004,901 | 70,130.5 | 137,795 | 7,646.8 |

| Stream | | 4 | | 5 | | 6 | | 7 | |
|---|---|---|---|---|---|---|---|---|---|
| Comp. | M.W. | LB/HR | MOL/HR | LB/HR | MOL/HR | LB/HR | MOLS/HR | LB/HR | MOLS/HR |
| $CH_4$ | 16.04 | 788 | 49.1 | 59,727 | 3,723.6 | 59,727 | 3,723.6 | 58,939 | 3,674.5 |
| $H_2$ | 2.016 | 452 | 224.2 | 34,123 | 16,926.0 | 34,279 | 17,003.3 | 33,827 | 16,779.1 |
| CO | 28.01 | 10,731 | 383.1 | 815,815 | 29,125.8 | 813,648 | 29,048.5 | 802,917 | 28,665.4 |
| $CO_2$ | 44.01 | 3,908 | 88.8 | 256,680 | 5,832.3 | 296,275 | 6,732.0 | 292,367 | 6,643.2 |
| $H_2S$ | 34.08 | 7 | 0.2 | 26,008 | 763.1 | 562 | 16.5 | 555 | 16.3 |
| COS | 60.07 | -- | -- | 2,489 | 41.4 | 210 | 3.5 | 210 | 3.5 |
| $NH_3$ | 17.03 | 7 | 0.4 | 529 | 31.1 | 530 | 31.1 | 523 | 30.7 |
| $N_2$ | 28.02 | 20,343 | 726.0 | 1,542,584 | 55,052.9 | 1,542,582 | 55,052.9 | 1,522,239 | 54,326.9 |
| $H_2O$ | 18.02 | 1,016 | 56.4 | 64,984 | 3,606.2 | 77,045 | 4,275.5 | 76,029 | 4,219.1 |
| TOTAL | | 37,252 | 1528.2 | 2,802,939 | 115,102.4 | 2,824,858 | 115,886.9 | 2,787,606 | 114,358.7 |

| Stream | | 8 | | 9 | | 10 | | 11 | |
|---|---|---|---|---|---|---|---|---|---|
| Comp. | M.W. | LB/HR | MOLS/HR | LB/HR | MOLS/HR | LB/HR | MOLS/HR | LB/HR | MOLS/HR |
| $O_2$ | 32.0 | 3,172,192 | 99,131 | 1,692,768 | 52,899.0 | | | | |
| $N_2$ | 28.02 | 10,455,607 | 373,148 | 10,260,420 | 366,182.0 | | | | |
| $CO_2$ | 44.01 | | | 1,715,800 | 38,986.6 | 404,822 | 9,198.4 | 380,189 | 8,638.7 |
| $H_2O$ | 18.02 | | | 511,941 | 28,409.6 | 90,403 | 5,016.8 | 77,836 | 4,319.4 |
| $SO_2$ | 64.06 | | | 1,268 | 19.8 | | | | |
| NO | 30.01 | | | 921 | 30.7 | | | | |
| $H_2S$ | | | | | | 3,050 | 89.5 | 26,818 | 786.9 |
| TOTAL | | 13,627,799 | 472,279 | 14,183,118 | 486,527.7 | 498,275 | 14,304.7 | 484,843 | 13,745.0 |

| Stream | | 12 | | 13 | | 14 | | 15 | |
|---|---|---|---|---|---|---|---|---|---|
| Comp. | M.W. | LB/HR | MOLS/HR | LB/HR | MOLS/HR | LB/HR | MOLS/HR | LB/HR | MOLS/HR |
| $CO_2$ | 44.01 | 2,711 | 61.6 | 382,900 | 8,700.3 | | | | |
| $H_2O$ | 18.02 | 366 | 20.3 | 55,363 | 3,072.3 | | | 72 | 4.0 |
| $H_2S$ | 34.08 | 3,688 | 108.2 | 3,050 | 89.5 | | | | |
| $O_2$ | 32.0 | | | | | 14,352 | 448.5 | 1,306 | 40.8 |
| $N_2$ | 28.02 | | | | | 47,275 | 1,687.2 | 47,275 | 1,687.2 |
| $SO_2$ | 64.06 | | | | | | | 314 | 4.9 |
| TOTAL | | 6,765 | 190.1 | 441,313 | 11,862.1 | 61,627 | 2,135.7 | 48,967 | 1,736.9 |

TABLE 11-13 (Cont'd)

MATERIAL BALANCE FOR U-GAS/LOW STEAM/CONOCO

| Stream | | 16 | | 17 | | 18 | | 19 | |
|---|---|---|---|---|---|---|---|---|---|
| Comp. | M.W. | LB/HR | MOLS/HR | LB/HR | MOLS/HR | LB/HR | MOLS/HR | LB/HR | MOLS/HR |
| $H_2O$ | 18.02 | | | 37,283 | 2,069 | 2,663 | 147.8 | 35,135 | 1,949.8 |
| $CO_2$ | 44.01 | | | | | 35,455 | 805.6 | | |
| S | 32.06 | 25,670 | 800.7 | | | | | | |
| TOTAL | | 25,670 | 800.7 | 37,283 | 2,069 | 38,118 | 953.4 | 35,135 | 1,949.8 |

| Stream | | 20 | | 21 | | 22 | | 23 | |
|---|---|---|---|---|---|---|---|---|---|
| Comp. | M.W. | LB/HR | MOLS/HR | LB/HR | MOLS/HR | LB/HR | MOLS/HR | LB/HR | MOLS/HR |
| $MgCO_3 \cdot CaCO_3$ | 184.1 | 25,338 | 137.7 | | | | | 25,338 | 137.7 |
| $MgO \cdot CaS$ | 112.46 | | | 608,634 | 5,412.0 | 699,231 | 6,217.6 | | |
| $MgO \cdot CaCO_3$ | 140.41 | | | 206,894 | 1,473.5 | 93,780 | 667.9 | | |
| Inert Solids | 100.0 | 2,340 | 23.4 | 117,050 | 1,170.5 | 117,050 | 1,170.5 | 2,340 | 23.4 |
| $H_2O$ | 18.02 | 33,836 | 1,877.7 | | | | | | |
| TOTAL | | 61,514 | 2,038.8 | 935,578 | 8,056.0 | 910,061 | 8,056.0 | 27,678 | 161.1 |

| Stream | | 24 | |
|---|---|---|---|
| Comp. | M.W. | LB/HR | MOLS/HR |
| $MgO \cdot CaS$ | 112.46 | 12,168 | 108.2 |
| $MgO \cdot CaCO_3$ | 140.41 | 4,142 | 29.5 |
| Inert Solids | 100.0 | | |
| TOTAL | | 16,310 | 137.7 |

## SYSTEM FLOW DIAGRAM— BCR/AIR —BLOWN/ CONOCO

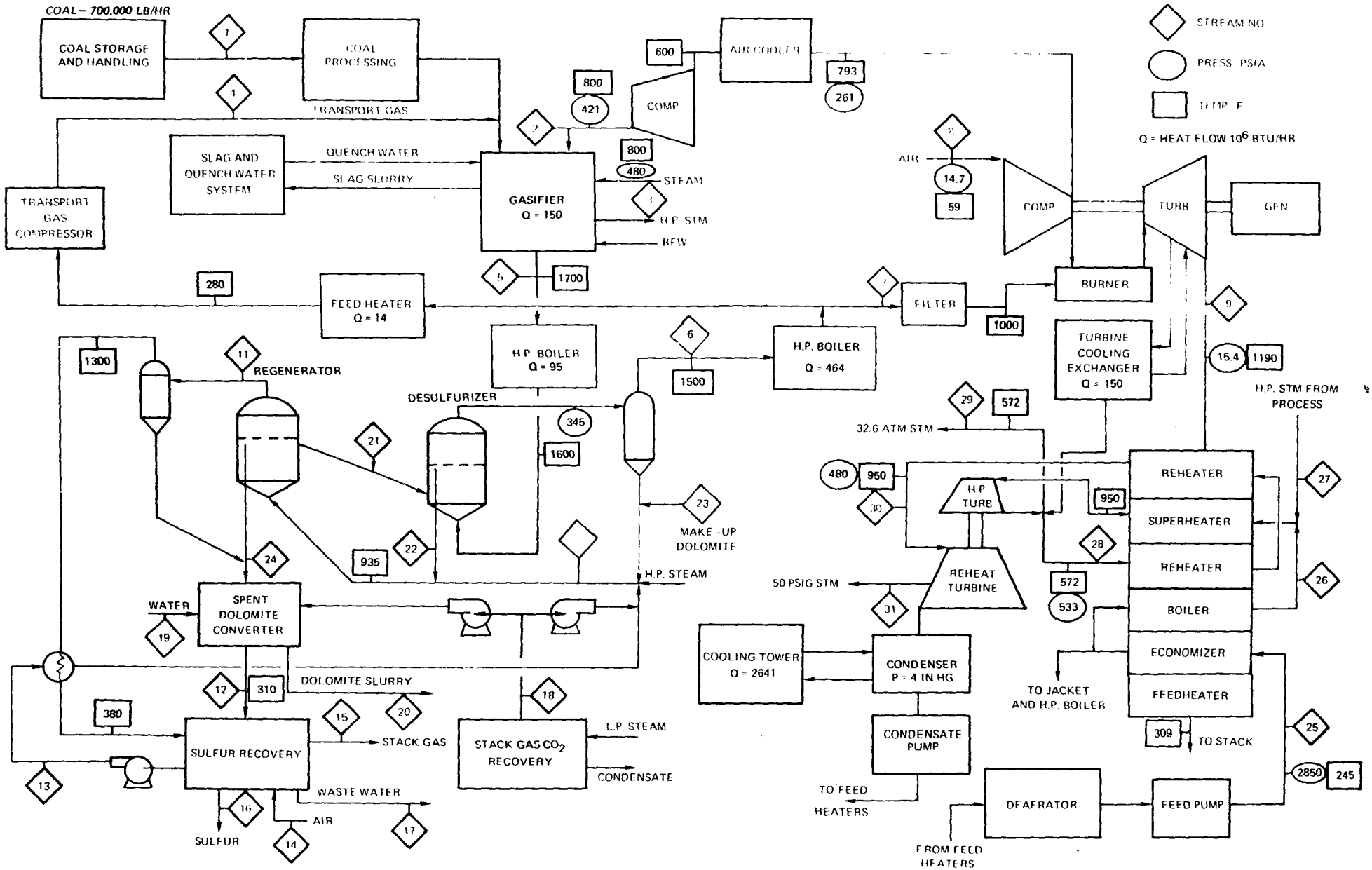


FIG. 11 –7

TABLE 11-14

MATERIAL BALANCE FOR BCR/AIR BLOWN/CONOCO

| Stream | | 1 | | 2 | | 3 | |
|---|---|---|---|---|---|---|---|
| Comp | M.W. | LB/HR | MOLS/HR | LB/HR | MOLS/HR | LB/HR | MOLS/HR |
| $CH_4$ | 16.04 | | | | | | |
| $H_2$ | 2.016 | | | | | | |
| CO | 28.01 | | | | | | |
| $CO_2$ | 44.01 | | | | | | |
| $H_2S$ | 34.08 | | | | | | |
| COS | 60.07 | | | | | | |
| $NH_3$ | 17.03 | | | | | | |
| $N_2$ | 28.02 | | | 1,469,803 | 52,455.5 | | |
| $O_2$ | 32.00 | | | 446,208 | 13,944.0 | | |
| $H_2O$ | 18.02 | | | 10,051 | 557.8 | 120,960 | 6.712.5 |
| Coal | | 700,000 | | | | | |
| Char | | | | | | | |
| TOTAL | | 700,000 | | 1,926,062 | 66,957.3 | 120,960 | 6,712.5 |

*MATERIAL BALANCE FOR BCR/AIR BLOWN/CONOCO*

| Stream | | 4 | | 5 | | 6 | | 7 | |
|---|---|---|---|---|---|---|---|---|---|
| Comp | M.W. | LB/HR | MOLS/HR | LB/HR | MOLS/HR | LB/HR | MOLS/HR | LB/HR | MOLS/HR |
| $CH_4$ | 16.04 | 1,355 | 84.5 | 60,551 | 3,775.0 | 60,551 | 3,775.0 | 59,196 | 3,690.5 |
| $H_2$ | 2.016 | 717 | 355.6 | 30,875 | 15,314.9 | 32,043 | 15,894.5 | 31,326 | 15,538.9 |
| CO | 28.01 | 19,809 | 707.2 | 901,631 | 32,189.6 | 885,396 | 31,610.0 | 865,587 | 30,902.8 |
| $CO_2$ | 44.01 | 4,788 | 108.8 | 149,462 | 3,396.1 | 214,038 | 4,863.4 | 209,250 | 4,754.6 |
| $H_2S$ | 34.08 | -- | -- | 25,594 | 751.0 | 324 | 9.5 | 324 | 9.5 |
| COS | 60.07 | -- | -- | 4,542 | 75.6 | 150 | 2.5 | 150 | 2.5 |
| $NH_3$ | 17.03 | 182 | 10.7 | 8,154 | 478.8 | 8,154 | 478.8 | 7,972 | 468.1 |
| $N_2$ | 28.02 | 33,697 | 1,202.6 | 1,506,167 | 53,753.3 | 1,506,167 | 53,753.3 | 1,472,471 | 52,550.7 |
| $H_2O$ | 18.02 | 957 | 53.1 | 39,871 | 2,212.6 | 42,789 | 2,374.5 | 41,832 | 2,321.4 |
| TOTAL | | 61,505 | 2,522.5 | 2,726,847 | 111,946.9 | 2,749,612 | 112,761.5 | 2,688,108 | 110,239.0 |

| Stream | | 8 | | 9 | | 10 | | 11 | |
|---|---|---|---|---|---|---|---|---|---|
| Comp | M.W. | LB/HR | MOLS/HR | LB/HR | MOLS/HR | LB/HR | MOLS/HR | LB/HR | MOLS/HR |
| $O_2$ | 32 | 3,282,240 | 102,570 | 1,794,080 | 56,065 | -- | -- | -- | -- |
| $N_2$ | 28.02 | 10,818,214 | 386,089 | 10,623,223 | 37,913 | -- | -- | -- | -- |
| $CO_2$ | 44.01 | -- | -- | 1,733,158 | 39,381 | 409,350 | 9,301.3 | 384,440 | 8,735.3 |
| $H_2O$ | 18.02 | -- | -- | 455,239 | 25,263 | 91,414 | 5,072.9 | 78,707 | 4,367.7 |
| $SO_2$ | 64.02 | -- | -- | 640 | 10 | -- | -- | -- | -- |
| NO | 30.01 | -- | -- | -- | -- | | | | |
| $H_2S$ | 34.08 | -- | -- | -- | -- | 3,084 | 90.5 | 27,118 | 795.7 |
| TOTAL | | 14,100454 | 488,659 | 14,606,340 | 499,849 | 503,848 | 23,766.0 | 490,265 | 13,898.7 |

TABLE 11-14 (Cont'd)

MATERIAL BALANCE FOR BCR/AIR BLOWN/CONOCO

| Stream | | 12 | | 13 | | 14 | | 15 | |
|---|---|---|---|---|---|---|---|---|---|
| Comp | M. W. | LB/HR | MOLS/HR | LB/HR | MOLS/HR | LB/HR | MOLS/HR | LB/HR | MOLS/HR |
| $CO_2$ | 44.01 | 2,742 | 62.3 | 387,182 | 8,797.6 | — | — | — | — |
| $H_2O$ | 18.02 | 371 | 20.6 | 55,981 | 3,106.6 | — | — | 72 | 4.0 |
| $H_2S$ | 34.08 | 3,728 | 109.4 | 3,084 | 90.5 | — | — | — | — |
| $O_2$ | 32.0 | — | — | — | — | 14,509 | 453.4 | 132 | 41.2 |
| $N_2$ | 28.02 | — | — | — | — | 47,791 | 1,705.6 | 47,791 | 1,705.6 |
| $SO_2$ | 64.06 | — | — | — | — | — | — | 314 | 4.9 |
| TOTAL | | 6,841 | 192.3 | 446,247 | 11,994.7 | 62,300 | 2,159.0 | 48,309 | 1,755.7 |

| Stream | | 16 | | 17 | | 18 | | 19 | |
|---|---|---|---|---|---|---|---|---|---|
| Comp | M. W. | LB/HR | MOLS/HR | LB/HR | MOLS/HR | LB/HR | MOLS/HR | LB/HR | MOLS/HR |
| $H_2O$ | 18.02 | — | — | 37,703 | 2,092.3 | 2,692 | 149.4 | 35,526 | 1,971.5 |
| $CO_2$ | 44.01 | — | — | — | — | 35,851 | 814.6 | — | — |
| S | 32.06 | 25,959 | 809.7 | — | — | — | — | — | — |
| TOTAL | | 25,959 | 809.7 | 37,703 | 2,092.3 | 38,543 | 964.0 | 35,526 | 1,971.5 |

*MATERIAL BALANCE FOR BCR/AIR BLOWN/CONOCO*

| Stream | | 20 | | 21 | | 22 | | 23 | |
|---|---|---|---|---|---|---|---|---|---|
| Comp | M.W. | LB/HR | MOLS/HR | LB/HR | MOLS/HR | LB/HR | MOLS/HR | LB/HR | MOLS/HR |
| $MgCo_3 \cdot CaCO_3$ | 184.01 | 25,614 | 139.2 | -- | -- | -- | -- | 25,614 | 139.2 |
| $MgO \cdot CaS$ | 112.46 | -- | -- | 612,300 | 5,444.6 | 703,910 | 6,259.2 | -- | -- |
| $MgO \cdot CaCo_3$ | 140.41 | -- | -- | 213,114 | 1,507.8 | 98,736 | 703.2 | -- | -- |
| Inert Solids | 100.0 | 2,370 | 23.7 | 118,360 | 1,183.6 | 118,360 | 1,183.6 | 2,370 | 23.7 |
| $H_2O$ | 18.02 | 34,211 | 1,898.5 | 943,774 | -- | -- | -- | -- | -- |
| TOTAL | | 62,195 | 2,061.4 | 1,887,548 | 8,146.0 | 921,006 | 8,146.0 | 27,984 | 162.9 |

| Stream | | 24 | | | | | | | |
|---|---|---|---|---|---|---|---|---|---|
| Comp | M.W. | LB/HR | MOLS/HR | LB/HR | MOLS/HR | LB/HR | MOLS/HR | LB/HR | MOLS/HR |
| $MgO \cdot CaS$ | 112.16 | 12,303 | 109.4 | | | | | | |
| $MgO \cdot CaCo_3$ | 140.41 | 4,184 | 29.8 | | | | | | |
| Inert Solids | 100.0 | 2,370 | 23.7 | | | | | | |
| TOTAL | | 18,857 | 162.9 | | | | | | |

# SYSTEM FLOW DIAGRAM– BCR/ OXYGEN–BLOWN/ CONOCO

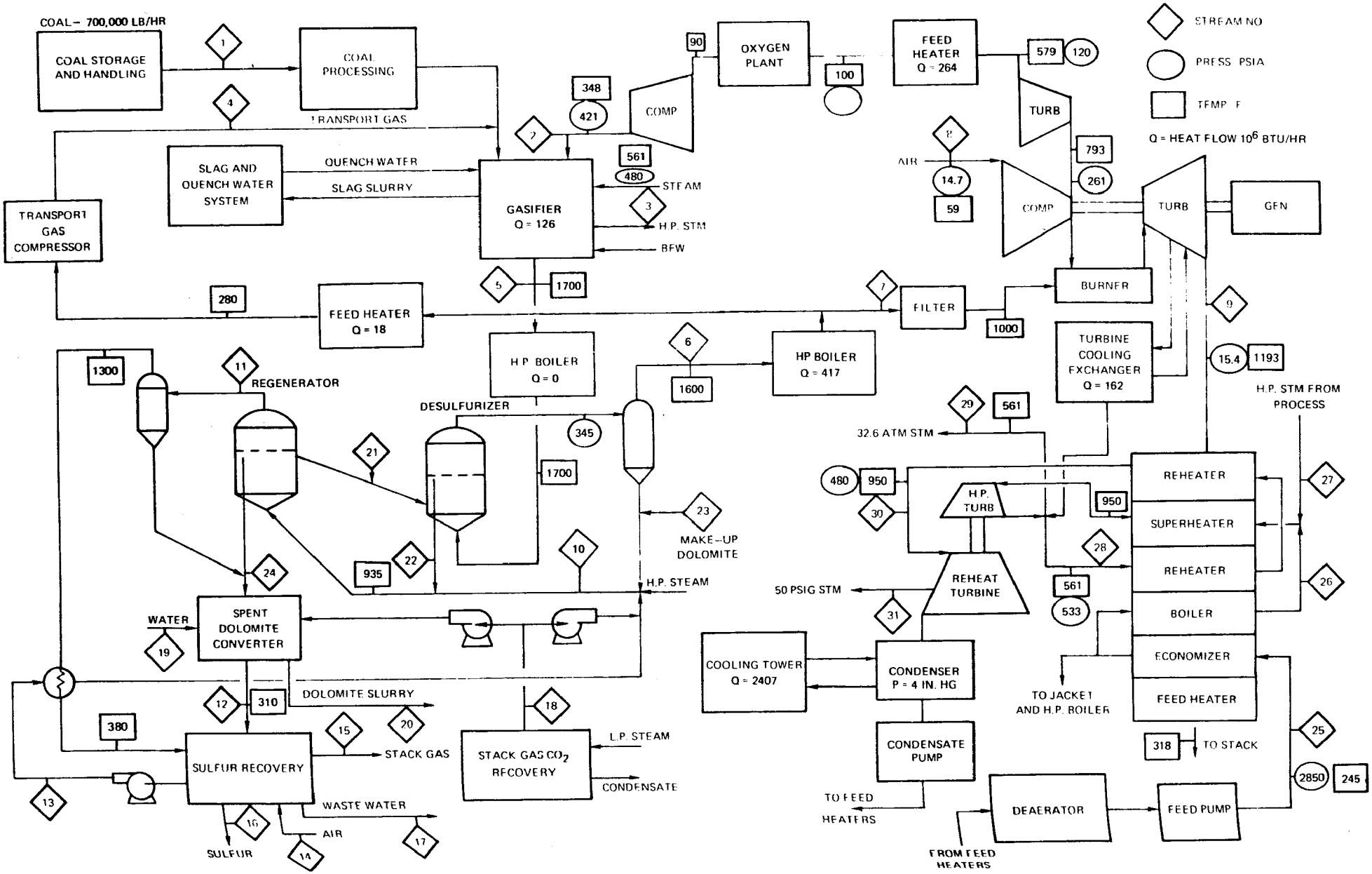


FIG.11–8

*MATERIAL BALANCE FOR BCR/OXYGEN BLOWN/CONOCO*

| Stream | | 1 | | 2 | | 3 | | 4 | |
|---|---|---|---|---|---|---|---|---|---|
| Comp | M.W. | LB/HR | MOLS/HR | LB/HR | MOLS/HR | LB/HR | MOLS/HR | LB/HR | MOLS/HR |
| $CH_4$ | 16.04 | | | | | | | 2,876 | 179.3 |
| $H_2$ | 2.016 | | | | | | | 1,810 | 897.7 |
| CO | 28.01 | | | | | | | 28,772 | 1,027.2 |
| $CO_2$ | 44.01 | | | | | | | 18,726 | 425.5 |
| $H_2S$ | 34.08 | | | | | | | 116 | 3.4 |
| COS | 60.07 | | | | | | | 30 | 0.5 |
| $NH_3$ | 17.03 | | | | | | | 339 | 19.9 |
| $N_2$ | 28.02 | | | 7,302 | 260.6 | | | 373 | 13.3 |
| $O_2$ | 32.00 | | | 408,627 | 12,769.6 | | | | |
| $H_2O$ | 18.02 | | | | | 418,320 | 23,214.2 | 7,805 | 433.1 |
| Coal Char | | 700,000 | | | | | | | |
| TOTAL | | 700,000 | | 415,929 | 13,030.2 | 418,320 | 23,214.2 | 60,847 | 2,999.9 |

TABLE 11-15 (Cont'd)

MATERIAL BALANCE FOR BCR/OXYGEN BLOWN/CONOCO

| Stream | | 5 | | 6 | | 7 | | 8 | |
|---|---|---|---|---|---|---|---|---|---|
| Comp | M.W. | LB/HR | MOLS/HR | LB/HR | MOLS/HR | LB/HR | MOLS/HR | LB/HR | MOLS/HR |
| $CH_4$ | 16.04 | 72,531 | 4,521.9 | 72,531 | 4,521.9 | 69,655 | 4,342.6 | | |
| $H_2$ | 2.016 | 44,549 | 22,097.6 | 45,652 | 22,645.0 | 43,843 | 21,747.3 | | |
| CO | 28.01 | 741,108 | 26,458.7 | 725,776 | 25,911.3 | 697,004 | 24,884.1 | | |
| $CO_2$ | 44.01 | 412,356 | 9,369.6 | 472,373 | 10,733.3 | 453,646 | 10,307.8 | | |
| $H_2S$ | 34.08 | 26,255 | 770.4 | 2,887 | 84.7 | 2,771 | 81.3 | | |
| COS | 60.07 | 4,620 | 76.9 | 697 | 11.6 | 667 | 11.1 | | |
| $NH_3$ | 17.03 | 8,561 | 502.7 | 8,561 | 502.7 | 8,222 | 482.8 | | |
| $N_2$ | 28.02 | 9,426 | 336.4 | 9,476 | 336.4 | 9,053 | 323.1 | 11,692,634 | 417,296 |
| $H_2O$ | 18.02 | 194,380 | 10,786.9 | 196,872 | 10,925.2 | 189,068 | 10,492.1 | | |
| $O_2$ | 32.00 | | | | | | | 3,547,520 | 110,860 |
| TOTAL | | 1,513,786 | 74,921.1 | 1,534,775 | 75,672.1 | 1,473,929 | 72,672.2 | 15,240,154 | 528,156 |

| Stream | | 9 | | 10 | | 11 | | 12 | |
|---|---|---|---|---|---|---|---|---|---|
| Comp | M.W. | LB/HR | MOLS/HR | LB/HR | MOLS/HR | LB/HR | MOLS/HR | LB/HR | MOLS/HR |
| $CH_4$ | 16.04 | | | | | | | | |
| $H_2$ | 2.016 | | | | | | | | |
| CO | 28.01 | | | | | | | | |
| $CO_2$ | 44.01 | 1,740,860 | 39,556 | 377,351 | 8,574.2 | 354,391 | 8,052.5 | 2,531 | 57.5 |
| $H_2S$ | 34.08 | | | 2,842 | 83.4 | 22,012 | 733.5 | 3,439 | 100.9 |
| COS | 60.07 | | | | | | | | |
| $NH_3$ | 17.03 | | | | | | | | |
| $N_2$ | 28.02 | 10,134,049 | 361,672 | | | | | | |
| $H_2O$ | 18.02 | 737,883 | 40,948 | 84,267 | 4,676.3 | 725,552 | 4,026.2 | 342 | 19.0 |
| $O_2$ | 32.00 | 2,045,408 | 63,919 | | | | | | |
| TOTAL | | 14,658,200 | 506,095 | 464,460 | 13,333.9 | 1,101,955 | 12,812.2 | 6,312 | 177.4 |

*MATERIAL BALANCE FOR BCR/OXYGEN BLOWN/CONOCO*

| Stream | | 13 | | 14 | | 15 | | 16 | |
|---|---|---|---|---|---|---|---|---|---|
| Comp | M.W. | LB/HR | MOLS/HR | LB/HR | MOLS/HR | LB/HR | MOLS/HR | LB/HR | MOLS/HR |
| $SO_2$ | 64.06 | | | | | 295 | 4.6 | | |
| $CH_4$ | 16.04 | | | | | | | | |
| S | 32.06 | | | | | | | 23,930 | 746.4 |
| $H_2$ | 2.016 | | | | | | | | |
| CO | 28.01 | | | | | | | | |
| $CO_2$ | 44.01 | 356,921 | 8,110.0 | | | | | | |
| $H_2S$ | 34.08 | 2,842 | 83.4 | | | | | | |
| COS | 60.07 | | | | | | | | |
| $NH_3$ | 17.03 | | | | | | | | |
| $N_2$ | 28.02 | | | 44,073 | 1,572.9 | 44,073 | 1,572.9 | | |
| $H_2O$ | 18.02 | 51,606 | 2,863.8 | | | 67 | 3.7 | | |
| $O_2$ | 32.00 | | | 13,379 | 418.1 | 1,216 | 38.0 | | |
| TOTAL | | 411,369 | 11,057.2 | 57,452 | 1,991.0 | 45,651 | 1,619.2 | 23,930 | 746.4 |

| Stream | | 17 | | 18 | | 19 | | | |
|---|---|---|---|---|---|---|---|---|---|
| Comp | M.W. | LB/HR | MOLS/HR | LB/HR | MOLS/HR | LB/HR | MOLS/HR | LB/HR | MOLS/HR |
| $CH_4$ | 16.04 | | | | | | | | |
| $H_2$ | 2.016 | | | | | | | | |
| CO | 28.01 | | | | | | | | |
| $CO_2$ | 44.01 | | | 33,052 | 751.0 | | | | |
| $H_2S$ | 34.08 | | | | | | | | |
| COS | 60.07 | | | | | | | | |
| $NH_3$ | 17.03 | | | | | | | | |
| $N_2$ | 28.02 | | | | | | | | |
| $H_2O$ | 18.02 | 34,755 | 1,928.7 | 2,483 | 137.8 | 32,762 | 1,818.1 | | |
| S | 32.06 | | | | | | | | |
| TOTAL | | 34,755 | 1,928.7 | 35,535 | 888.8 | 32,762 | 1,818.1 | | |

TABLE 11-15 (cont'd)

MATERIAL BALANCE FOR BCR/OXYGEN BLOWN/CONOCO

| Stream | | 20 | | 21 | | 22 | | 23 | |
|---|---|---|---|---|---|---|---|---|---|
| Comp | M.W. | LB/HR | MOLS/HR | LB/HR | MOLS/HR | LB/HR | MOLS/HR | LB/HR | MOLS/HR |
| | 184.01 | 23,627 | 128.4 | | | | | 23,627 | 128.4 |
| | 112.46 | | | 567,383 | 5,045.2 | 651,841 | 5,796.2 | | |
| | 140.41 | | | 192,867 | 1,373.6 | 87,419 | 622.6 | | |
| Inert Solids | 100.0 | 2,180 | 21.8 | 109,120 | 1,091.2 | 109,120 | 1,091.2 | 2,180 | 21.8 |
| $H_2O$ | 18.02 | 31,549 | 1,750.8 | | | | | | |
| TOTAL | | 57,356 | 1,901.0 | 869,370 | 7,510.0 | 848,380 | 7,510.0 | 25,807 | 150.2 |

| Stream | | 24 | | | | | | | |
|---|---|---|---|---|---|---|---|---|---|
| Comp | M.W. | LB/HR | MOLS/HR | LB/HR | MOLS/HR | LB/HR | MOLS/HR | LB/HR | MOLS/HR |
| | 112.46 | 11,347 | 100.9 | | | | | | |
| | 140.41 | 3,861 | 27.5 | | | | | | |
| Inert Solids | 100.0 | 2,180 | 21.8 | | | | | | |
| TOTAL | | 17,388 | 150.2 | | | | | | |

*TABLE 11-16*

UTILITY SUMMARY - BCR/CONOCO - AIR-BLOWN

| | Coal Prep. | Gasifier | Acid Gas Removal | Sulfur Recovery | $CO_2$ Supply | Sour Water Stripper | Total |
|---|---|---|---|---|---|---|---|
| Steam - #/hr | | | | | | | |
| 450 psig (Sat) | | 120,960 | 35,425 | | | | 156,385 |
| 100 psig (Sat) | | | | | 63,455 | 8,400 | 71,855 |
| Power - kW | 4,360 | 1,960 | 470 | 4,260 | 9,975 | 186 | 21,211 |
| Cooling Water-GPM | | 5,500 | 1,225 | 6,720 | 5,800 | 65 | 19,310 |
| Cooling Duty MM Btu/hr | | 55.0 | 12.3 | 67.2 | 58.0 | 0.7 | 193 |
| Export Heat | | | | | | | |
| MM Btu | | | 62.1 | 49.8 | | | -- |
| Temp - F | | | 300 | 350 | | | -- |

TABLE 11-17

UTILITY SUMMARY - BCR/CONOCO - $O_2$ - BLOWN

| | Coal Prep. | Gasifier | Acid Gas Removal | Sulfur Recovery | $CO_2$ Supply | Sour Water Stripper | Total |
|---|---|---|---|---|---|---|---|
| Steam - #/hr | | | | | | | |
| 450 psig (SAT) | | 418,320 | 31,740 | | | | 450,060 |
| 100 psig (SAT) | | | | | 58,505 | 7,900 | 66,400 |
| Power - KW | 4,360 | 1,260 | 435 | 3,930 | 9,200 | 175 | 19,360 |
| Cooling Water-GPM | | 5,500 | 1,130 | 6,200 | 5,350 | 60 | 18,240 |
| Cooling Duty-MM Btu/hr | | 55 | 11.3 | 62. | 53.5 | .6 | 182 |
| Export Heat - | | | | | | | |
| MM Btu | | | 57.2 | 45.9 | | | |
| Temp - F | | | 300 | 350 | | | |

TABLE 11-18

UTILITY SUMMARY - BCR/CONOCO - AIR-BLOWN

| | Coal Prep. | Gasifier | Acid Gas Removal | Sulfur Recovery | $CO_2$ Supply | Sour Water Stripper | Total |
|---|---|---|---|---|---|---|---|
| Steam - #/hr 450 psig (SAT) | | 137,795 | 35,050 | | | | 172,845 |
| 100 psig (SAT) | | | | | 62,760 | 8,400 | 71,160 |
| Power - kW | 2,500 | 810 | 465 | 4,220 | 9,865 | 185 | 18,045 |
| Cooling Water - GPM | | | 1,210 | 6,650 | 5,750 | 65 | 13,675 |
| Cooling Duty - MM Btu/hr | | | 12.1 | 66.5 | 57.5 | 0.6 | 137 |
| Export Heat - MM Btu/hr | | | 61.4 | 49.2 | | | |
| Temperature - F | | | 300 | 350 | | | |

NOTE: Based on 700,000 #/hr coal feed rate.

a heat recovery boiler is used to drop the raw gas temperature by 100 F. The net effect of the reaction in the absorber is endothermic. In addition, heat leaks and the effect of the recirculated stone combine to cause an approximately 100 F drop in the gas temperature from inlet to outlet of the desulfurizer.

Following desulfurization, gas temperature is dropped to 1000 F by raising high-pressure steam in a waste heat boiler. The steam cycle arrangement is the same as in the low-temperature systems; however, utility requirements of the Conoco system differ somewhat.

High-pressure steam is needed to rehumdify the gas stream to the acceptor regenerator. Low-pressure steam is needed in the $CO_2$ supply system which removes $CO_2$ from the stack gas. The other need for low-pressure steam is in the sour water stripper. Overall, the process exports heat to the power system. Heat is available from the acid gas stream that must be cooled before being fed to the liquid phase Claus plant. Also, the waste heat from the sulfur combustor is available.

In the earlier studies, $CO_2$ for use in acceptor regeneration and conversion of the spent dolomite was removed at pressure from the cool transport gas. In the present study, transport gas flow rate and $CO_2$ concentration are so low as to preclude use of that stream for a $CO_2$ supply; therefore, a stack gas bleed stream was selected for use. Less than 3 percent of the stack gas is required so that the resultant change in mixed mean temperature is insignificant when the bleed stream is returned to the stack.

Performance of the high-temperature systems, as expected, showed a somewhat higher overall efficiency than the low-temperature counterparts. However, the advantage was markedly reduced over previous studies where as much as a six point differential had been noted. The comparison between air- and oxygen-blown operation seems to be relatively unaffected by the cleanup system. A slight advantage for the oxygen-blown gasifier with Conoco cleanup was noted due apparently to the increased water vapor in the raw gas from the oxygen-blown gasifier.

The reduced differential between high- and low-temperature desulfurization is of special interest because it results from operation of the gasifier at conditions favorable to combined-cycle performance. Operation under low-steam feed rates has yet to be demonstrated and there is some concern over the ability to control reactor conditions without large quantities of excess steam. Of importance, however, is the fact that there is more than one way to achieve improved overall power plant generating efficiency.

## SYSTEM COST ESTIMATES

The following paragraphs discuss the costs of the eight integrated systems and the means by which they were determined. All capital costs are in mid-1977 dollars. Where necessary, costs have been escalated to that time by established procedures (References 11-2, 11-3, and 11-4). In determining the cost of electricity, a relatively simple procedure was used. Yearly capital charges are taken to be 17 percent of the total investment cost. A load

factor of 70 percent was assumed and coal cost taken to be $1.00/10^6 Btu. Based upon prior studies, yearly maintenance and operating costs were estimated to be 3.5 percent of the combined-cycle power system cost and 8.5 percent of the fuel processing system cost.

Sources of cost data are discussed below but, in general, gasifier and fuel processing costs for systems with Selexol cleanup were prepared by Fluor Engineers and Constructors; Selexol costs by Allied Chemical; and power systems costs by United Technologies Research Center. Costs for the molten salt system were developed previously at Pullman Kellogg (Reference 11-5) and for the Conoco desulfurization process by Conoco (Reference 11-6) under contract to the EPA.

A summary of fuel processing system costs is given in Table 11-19 for low-temperature and in Table 11-20 for high-temperature cleanup systems. Power system costs are given in Table 11-21. While total costs are on the same basis, individual costs for the various parts of the fuel systems include indirect costs for engineering and supervision during construction but do not include any funds for contingency. For the power systems, indirect costs are not included in the individual items.

Contingencies have been applied to each group of costs. These vary based on judgment of the overall development status of the equipment. For the power systems a contingency of 15 percent was used while the factor was higher for the fuel systems, 21 percent for low- and 25 percent for high-temperature systems.

## Fuel Processing Systems with Selexol Desulfurization

For this group of systems, cost estimates were prepared by Fluor. They are based on data developed previously under contract to EPRI and adjusted to the parameters of this study. An example of the costing basis is given in Appendix B for the air-blown BCR system. The data provided by Fluor covered all major fuel processing equipment with the exception of the Selexol system.

The cost of that unit was estimated by the developer, Allied Chemical, and scaled as a function of gas flow rates. The costs appear to be consistent with data that have subsequently been obtained from Fluor. Other costs assigned to the fuel processing section include the bleed-air cooling heat exchanger and boost compressor, an incremental cost for cooling water (cooling tower plus circulating system) and boiler make-up water treatment facilities (for treating gasifier steam), and "other support facilities". This last category includes waste water treatment, gas flaring, instrument air, etc. For the oxygen-blown system, an auxiliary compressor was included for startup of the air separation plant.

## Molten Salt System Costs

For the molten salt system, cost information was provided by Pullman Kellogg (Reference 11-5). The estimate is considered to be a rough order of magnitude number and required escalation and scaling to be comparable with

TABLE 11-19

FUEL PROCESSING COST SUMMARY
LOW-TEMPERATURE CLEANUP

| | U-Gas EPRI Data | U-Gas Low Stm | BCR Air | BCR $O_2$ | Molten Salt |
|---|---|---|---|---|---|
| Coal Handling | 16,725 | 16,725 | 28,287 | 28,287 | *137,900 |
| Air Separation | | | | 41,155 | |
| Oxidant Feed & Cooling | 4,241 | 4,042 | 3,861 | 7,622 | |
| Gasification & Ash Handling | 30,699 | 30,699 | 40,353 | 35,040 | |
| Gas Cooling & Scrub | 53,005 | 53,005 | 31,040 | 19,605 | |
| Acid Gas Removal | 29,000 | 27,500 | 26,600 | 16,600 | |
| Sulfur Rec. & Tail Gas Cleanup | 10,894 | 10,894 | 10,894 | 10,894 | 10,260 |
| Sour Water Treating | 1,853 | 1,853 | 7,377 | 7,377 | - |
| Cooling & Make-up Water | 12,064 | 5,547 | 4,661 | 11,027 | 2,468 |
| Other Support Facilities | 8,400 | 8,400 | 10,400 | 10,400 | 8,400 |
| Aux. $O_2$ Plant Compressor | | | | 2,245 | |
| Subtotal | 166,881 | 158,665 | 163,473 | 188,752 | 159,028 |
| Contingency | 35,045 | 33,320 | 34,329 | 39,638 | 33,396 |
| Escalation During Constr. | 27,986 | 26,608 | 27,414 | 31,654 | 26,717 |
| Subtotal | 229,912 | 218,593 | 225,216 | 260,044 | 219,141 |
| Interest During Constr. | 53,340 | 50,714 | 52,250 | 60,330 | 50,841 |
| Total Cost | 283,252 | 269,307 | 277,466 | 320,374 | 269,982 |
| Costs in Thousands of Dollars - Mid 1977 | | | | | |
| Unit Cost - $/kW | 264 | 243 | 253 | 307 | 283 |

* Total cost for gasifier and cleanup system

TABLE 11-20

FUEL PROCESSING COST SUMMARY
HIGH-TEMPERATURE CLEANUP

| | U-Gas Low Stm | BCR-Air | BCR-$O_2$ |
|---|---|---|---|
| Coal Handling | 16,725 | 28,287 | 28,287 |
| Air Separation | | | 41,155 |
| Oxidant Feed and Cooling | 4,042 | 3,861 | 7,622 |
| Gasification & Ash Handling | 30,699 | 40,353 | 35,040 |
| Gas Cooling | 9,720 | 10,160 | 7,700 |
| Acid Gas Removal | 16,444 | 16,444 | 16,444 |
| Particulate Removal | 8,529 | 8,313 | 6,210 |
| Sulfur Recovery | 12,279 | 12,279 | 12,279 |
| $CO_2$ Supply | 3,676 | 3,676 | 3,676 |
| Cooling & Makeup Water | 4,449 | 4,451 | 10,516 |
| Other Support Facilities | 8,400 | 10,400 | 10,400 |
| Aux. $O_2$ Plant Compressor | | | 2,245 |
| Subtotal | 114,963 | 138,224 | 181,574 |
| Contingency (30%) | 34,489 | 41,467 | 54,472 |
| Escalation During Constr.(.168) | 19,314 | 23,222 | 30,504 |
| Subtotal | 168,766 | 202,913 | 266,550 |
| Interest During Const. (.232) | 39,154 | 47,076 | 61,840 |
| Total Cost | 207,920 | 249,989 | 328,390 |
| Costs in thousands of dollars - Mid 1977 | | | |
| Unit Cost - $/kW | 182 | 220 | 299 |

TABLE 11-21

POWER SYSTEMS COST SUMMARY

| Item | U-Gas Selexol | U-Gas Selex (Low Stm) | BCR-Air Selexol | BCR-$O_2$ Selexol | Molten Salt | U-Gas Conoco Low-Stm | BCR-Air Conoco | BCR-$O_2$ Conoco |
|---|---|---|---|---|---|---|---|---|
| 341 Site and Structures | 10,577 | 10,771 | 10,702 | 10,445 | 9,487 | 10,825 | 10,838 | 10,620 |
| 343 Gas Turbine | 57,763 | 58,874 | 59,831 | 55,396 | 51,571 | 60,086 | 61,062 | 57,698 |
| 344 Gas Generator | 15,289 | 15,618 | 15,903 | 14,456 | 13,556 | 16,126 | 16,298 | 15,202 |
| 312 Boiler Plant | 72,165 | 75,698 | 77,609 | 82,046 | 63,494 | 60,062 | 66,953 | 84,058 |
| 314 Steam Turbogenerator | 37,541 | 38,029 | 36,876 | 36,544 | 37,735 | 38,043 | 37,360 | 36,957 |
| 345 & 353 Acc. Elect. Equip. | 18,547 | 19,187 | 18,853 | 17,523 | 13,169 | 19,463 | 19,391 | 18,299 |
| 346 Misc. Pwr Plant Equip. | 559 | 568 | 563 | 541 | 528 | 573 | 571 | 554 |
| Adj. Direct Const. Costs | 212,441 | 218,745 | 220,337 | 216,951 | 189,540 | 205,178 | 212,473 | 223,388 |
| Other Expenses | 18,589 | 19,140 | 19,279 | 18,983 | 16,585 | 17,953 | 18,591 | 19,547 |
| Direct Const. Costs | 231,030 | 237,885 | 239,616 | 235,934 | 206,125 | 223,131 | 231,064 | 242,935 |
| Indirects | 80,861 | 83,260 | 83,866 | 82,577 | 72,144 | 78,096 | 80,872 | 85,027 |
| Escalation | 35,690 | 36,749 | 37,017 | 36,448 | 31,464 | 34,470 | 35,696 | 37,529 |
| Total Investment Cost | 347,581 | 357,894 | 360,499 | 354,959 | 309,733 | 335,697 | 347,632 | 365,491 |
| Interest During Const. | 80,639 | 83,031 | 83,636 | 82,350 | 71,858 | 77,882 | 80,651 | 84,794 |
| Grand Total | 428,220 | 440,925 | 444,135 | 437,309 | 381,591 | 413,579 | 428,283 | 450,285 |

Costs are in thousands of dollars - Mid 1977

| | | | | | | | | |
|---|---|---|---|---|---|---|---|---|
| Unit cost - $/kW | 399 | 398 | 404 | 418 | 400 | 361 | 377 | 410 |

other data. Therefore, the degree of confidence in the data is low. However, the cost in $/kW is quite consistent with the other low-temperature systems.

Those items not covered in the estimate provided by Pullman Kellogg were scaled on a consistent basis with the other low-temperature systems.

## High Temperature Fuel Processing System Costs

For these systems, coal handling and gasification costs are the same as for the low-temperature systems. Conoco costs were obtained from data presented in Reference 11-6. However, because gas cooling requirements differ significantly, that equipment was removed from the Conoco process and treated separately. Costs were assumed to vary with the 0.7 power for sulfur removal, sulfur recovery and make-up $CO_2$ sections. Data contained in Reference 11-7 by Stone and Webster were helpful in estimating costs of hot gas handling equipment, i.e., the high-pressure boiler and particulate filter. Information contained there correlated well with other sources (References 11-8 and 11-9) and was used for those estimates.

While the degree of confidence in the costs of the three high-temperature systems is not high, they are valuable for comparative purposes. The U-Gas process shows a cost advantage in both coal preparation and gasification over the BCR air-blown system. These two areas account for most of the difference between the two. In comparing the air- and oxygen-blown BCR systems, all costs are similar with the exception of the air-separation plant. In the low-temperature comparison, the cost of air-separation was offset in large measure by reduced gas cooling and desulfurization costs. Here, desulfurization costs were based directly on sulfur removal rate as the desulfurization process is not aided by increased partial pressure of $H_2S$ and the major part of the Conoco system is devoted to regeneration of the dolomite. Thus, the capital cost and overall generating cost for the high-temperature oxygen-blown system does not show any significant advantage over the low-temperature system.

## Power System Costs

Power system costs are relatively constant on a per kilowatt basis. They are summarized in Table 11-21. Using the air-blown BCR Selexol system as an example, the costing breakdown is presented in Appendix C. As mentioned in the discussion of performance, the use of a fixed steam cycle (i.e., a steam cycle whose operating conditions have not been optimized for this particular application) tends to increase the size of the gas turbine exhaust waste heat boiler in the oxygen-blown systems. Also, because it was necessary to use the gas turbine exhaust waste heat boiler for feedwater heating in the two air-blown Conoco systems, temperature differences were increased and boiler costs reduced significantly. This suggests that some further optimization is possible, but it is doubtful that the resulting improvement would materially change the study's conclusions.

The power systems presented in this report differ significantly as compared to those of earlier studies (References 11-1 and 11-10). The changes are due to the decision to use a moderate (18:1) pressure ratio gas turbine so that a 2400 psi reheat steam cycle could be utilized. This results in improved cycle efficiency and an overall reduction in generating costs, despite the fact that the steam generation fraction is increased. This has been discussed previously in Section 7. Turbogenerator costs, as compared to Reference 11-10, increase but not out of proportion to the increased output. In fact, the unit price is slightly less after taking into account escalation and the reduction in cost due to increased size. However, waste heat boiler sizes are up by 50 to 60 percent and when combined with revised unit cost data that show a higher than average escalation rate, waste heat boiler costs have increased approximately by a factor of two. The overall effect is a slight increase in unit cost of the equipment associated with steam power generation.

Unfortunately, the picture is clouded by the fact that some of the steam associated costs are assigned to the gasification and cleanup portion of the system. These are primarily the costs of steam generation in the gasifier, the fuel gas heat recovery boiler, and boost compressor cooling boiler. If these were included, the unit cost of the steam power generation would probably decrease, or at worst remain constant, because of the improved efficiency achieved with a reheat cycle.

Gas turbine manufacturing costs appear to follow overall escalation factors quite closely. Other considerations, however, indicate that current mark-up factors may be insufficient when applied to advanced, high-temperature, high-performance engines. These improvements generally tend to reduce or at least not increase the unit manufacturing cost. On the other hand the development costs needed to produce the improvements are sharply increased. The number of units over which these costs can be spread is one of the major uncertainties. Also, the availability of government funding for development of these improvements is questionable. Because of these uncertainties, recent studies have indicated that estimates of gas turbine prices (based on the availability of advanced technology) should be increased by some 70 percent over those used in previous studies although the inflation rate for this area has been approximately 15 percent.

Current conditions are such that it is prudent to raise the total of indirect costs from 23 to 30 percent. These consist of a contingency allowance plus engineering and construction supervision costs. The overall result is a relatively large increase in the unit cost of the power system. However, it is balanced by an improved system efficiency and the resulting higher output tends to reduce the unit cost of fuel processing.

## REFERENCES


11-1 Robson, F. L., A. J. Giramonti, W. A. Blecher and G. Mazzella. Fuel Gas Environmental Impact - Phase Report, EPA 600/2-75-078, November 1975.

11-2 Handy-Whitman Index of Public Utility Construction Costs, Bulletin 102. Whitman, Reguardt, and Associates, Baltimore, Maryland.

11-3 Economic Indicators. Bi-Weekly Issues of Chemical Engineering.

11-4 Nelson Cost Indexes of Refinery Construction. Oil and Gas Journal Issues.

11-5 Private Communication. Pullman Kellogg Division of Pullman Inc., April 1976.

11-6 Curran, G. P., B. J. Koch, B. Paske, M. Pell and E. Gorin: High-Temperature Desulfurization of Low-Btu Gas.EPA-600/7-77-031, (NTIS No. PB271-008), April 1977.

11-7 Jones, C. H. and J. M. Donahue: Comparative Evaluation of High and Low Temperature Gas Cleaning for Coal Gasification - Combined Cycle Power Systems. EPRI AF-416, April 1977.

11-8 Private Communication. Combustion Power Co.,May 1977.

11-9 Guthrie, K. M.: Process Plant Estimating, Evaluation and Control. Craftsman Book Co. of America, 1974.

11-10 Robson, F. L., W. A. Blecher and C. B. Colton: Fuel Gas Environmental Impact. EPA-600/2-76-153, June 1976.

# APPENDIX A

## WATER TREATMENT AND REUSE

The following appendix presents a discussion of the water requirements, treatment and reuse for the integrated power plants described in the current study.

### WATER REUSE FOR COGAS SYSTEMS

High water requirements for coal conversion plants impose certain constraints on water utilization. The water use and reuse system should be designed to make maximum utilization of scarce water without damaging the environment. The water for the plant will be provided from the reservoir, which will be withdrawn from a local source. The water supply system will be capable of delivering sufficient water to match the plant requirements. The commercial plant will probably have to meet zero discharge criteria by the year 1985. None of the water will then be returned to any stream or stream bed. The COGAS plant water reuse system is shown in Figure A-1 for the BCR/Air-Blown/Selexol, BCR/Oxygen-Blown/Selexol, and U-Gas/Air-Blown/Selexol processes. The flowsheet is greatly simplified and is intended to show the overall plant water balance or overall recirculating systems. The water balances for the above three processes are given in Tables A-1 to 3. The numbers represent combined flow rates of cooling water for condenser and gasification process units. Cooling water requirements for the gasification process units are given separately at the bottom of each table. The cooling water requirements for BCR and IGT processes employing Conoco cleanup are shown in Tables A-4 to 6. The cooling water requirements for the gasification units, acid gas removal, sulfur recovery, carbon dioxide supply, and sour water stripper are shown at the bottom of each table.

The processes will use two separate cooling tower systems. The first system of cooling towers will supply water to the surface condenser. The second system will supply cooling water to the gasification system. The make-up water requirements for the BCR/Air-Blown/Conoco, BCR/Oxygen-Blown/Conoco and IGT/Air-Blown/Conoco combined cooling systems are about 6,460, 6,150, and

## COMBINED CYCLE–POWER PLANT – WATER TREATMENT AND REUSE

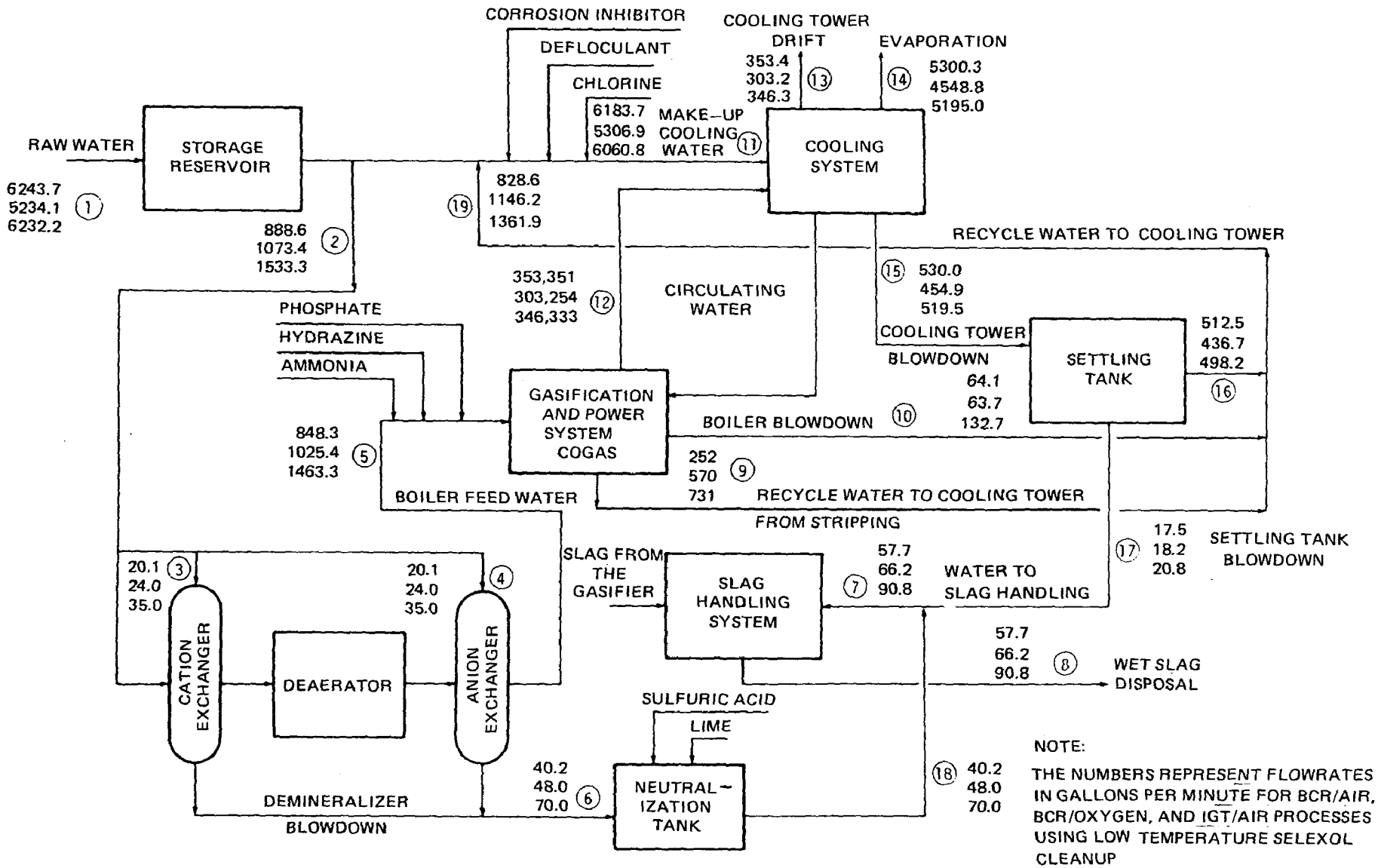


NOTE:

THE NUMBERS REPRESENT FLOWRATES IN GALLONS PER MINUTE FOR BCR/AIR, BCR/OXYGEN, AND IGT/AIR PROCESSES USING LOW TEMPERATURE SELEXOL CLEANUP

FIG. A–1

TABLE A-1

WATER BALANCES FOR THE BCR/AIR-BLOWN/SELEXOL PROCESS OVERALL WATER BALANCE (SEE FIG. A-1)

| Stream No. | Description | Flows, lb/hr |
|---|---|---|
| 1 | Raw water | 3,120,600 |
| 2 | Raw water to demineralizer | 444,120 |
| 3 | Acid regenerant and rinse water | 10,050 |
| 4 | Alkaline regenerant and rinse water | 10,050 |
| 5 | Boiler feed water to process | 423,980 |
| 6 | Demineralizer blowdown | 20,090 |
| 7 | Water to slag handling | 28,840 |
| 8 | Water associated with slag disposal | 28,840 |
| 9 | Make-up water to cooling tower from stripping | 125,950 |
| 10 | Boiler blowdown | 32,040 |
| 11 | Make-up cooling water | 3,090,610 |
| 12 | Cooling tower circulating water | 176,604,880 |
| 13 | Drift losses from cooling water | 176,630 |
| 14 | Evaporation losses from cooling tower | 2,649,090 |
| 15 | Cooling tower blowdown | 264,890 |
| 16 | Make-up water to cooling tower from settling tank | 256,150 |
| 17 | Settling tank blowdown to slag handling | 8,750 |
| 18 | Water from neutralization tank to slag handling | 20,100 |
| 19 | Recycle water to cooling tower as make-up water | 414,130 |

Cooling Water Requirements for Process Units

| | | |
|---|---|---|
| 1. | Gasification | 2,739,400 |
| 2. | Gas scrubbing | 1,265,990 |
| 3. | Acid gas removal | 13,879,450 |
| 4. | Ammonia recovery | 323,870 |
| 5. | Sulfur recovery | 62,980 |

TABLE A-2

WATER BALANCES FOR THE BCR/OXYGEN-BLOWN/SELEXOL PROCESS OVERALL WATER BALANCE (SEE FIG. A-1)

| Stream No. | Description | Flow lb/hr |
|---|---|---|
| 1 | Raw water | 2,616,000 |
| 2 | Raw water to demineralizer | 536,490 |
| 3 | Acid regenerant and rinse water | 12,000 |
| 4 | Alkaline regenerant and rinse water | 512,600 |
| 5 | Boiler feed water to process | 23,990 |
| 6 | Demineralizer blowdown | 83,090 |
| 7 | Water to slag handling | 83,090 |
| 8 | Water associated with slag disposal | 284,890 |
| 9 | Make-up water to cooling tower from stripping | 31,840 |
| 10 | Boiler blowdown | 2,652,410 |
| 11 | Make-up cooling water | 151,566,350 |
| 12 | Cooling tower circulating water | 151,540 |
| 13 | Drift losses from cooling tower | 227,360 |
| 14 | Evaporation losses from cooling tower | 2,273,490 |
| 15 | Cooling tower blowdown | 218,260 |
| 16 | Make-up water to cooling tower from settling tank | 211,650 |
| 17 | Settling tank blowdown to slag handling | 9,100 |
| 18 | Water from neutralization tank to slag handling | 23,990 |
| 19 | Recycle water to cooling tower as make-up water | 572,870 |

Cooling Water Requirements for Process Units

| | | |
|---|---|---|
| 1. | Acid gas removal | 7,892,840 |
| 2. | Ammonia recovery | 143,940 |
| 3. | Sulfur recovery | 62,980 |

TABLE A-3

WATER BALANCES FOR THE IGT/AIR-BLOWN/SELEXOL PROCESS OVERALL WATER BALANCE (SEE FIG. A-1)

| Stream No. | Description | Flow lb/hr |
|---|---|---|
| 1 | Raw water | 3,114,850 |
| 2 | Raw water to demineralizer | 766,340 |
| 3 | Acid regenerant and rinse water | 17,490 |
| 4 | Alkaline regenerant and rinse water | 17,490 |
| 5 | Boiler feed water to process | 731,360 |
| 6 | Demineralizer blowdown | 34,990 |
| 7 | Water to slag handling | 45,380 |
| 8 | Water associated with slag disposal (54% solids) | 45,380 |
| 9 | Make-up water to cooling tower from stripping | 365,350 |
| 10 | Boiler blowdown | 66,320 |
| 11 | Make-up cooling water | 3,029,200 |
| 12 | Cooling tower circulating water | 173,097,230 |
| 13 | Drift losses from cooling tower | 173,080 |
| 14 | Evaporation losses from cooling tower | 2,596,460 |
| 15 | Cooling tower blowdown | 259,660 |
| 16 | Make-up water to cooling tower from settling tank | 249,000 |
| 17 | Settling tank blowdown to slag handling | 10,400 |
| 18 | Water from neutralization tank to slag handling | 34,990 |
| 19 | Recycle water to cooling tower as make-up water | 680,680 |

Cooling Water Requirements for Process Units

| | | |
|---|---|---|
| 1. | Gas scrubbing | 1,780,290 |
| 2. | Acid gas removal | 151,139,950 |
| 3. | Ammonia recovery | 402,840 |

TABLE A-4

COOLING WATER REQUIREMENTS FOR
BCR/AIR-BLOWN/CONOCO PROCESS

| Description | Flow, lb/hr |
|---|---|
| Boiler feed waters to demineralizers | 242,820 |
| Make-up cooling water | 3,229,300 |
| Cooling tower circulating water | 184,531,140 |
| Evaporation losses from cooling tower | 2,767,970 |
| Cooling tower blowdown | 276,800 |
| Drift losses from cooling tower | 184,530 |
| **Cooling Water Requirements for process Gasification Units** | |
| Acid gas removal | 612,260 |
| Sulfur removal | 3,358,660 |
| $CO_2$ supply | 2,898,840 |
| Sour water stripper | 32,490 |
| Gasifier | 2,748,900 |

TABLE A-5

COOLING WATER REQUIREMENTS FOR
BCR/OXYGEN-BLOWN/CONOCO PROCESS

| Description | Flows, lb/hr |
|---|---|
| Boiler feed water to demineralizers | 570,010 |
| Make-up cooling water | 3,073,130 |
| Cooling tower circulating water | 175,607,450 |
| Evaporation losses from cooling tower | 2,634,110 |
| Cooling tower blowdown | 263,410 |
| Drift losses from cooling tower | 175,610 |
| **Cooling Water Requirements for Process Gasification Units** | |
| Acid gas removal | 564,770 |
| Sulfur recovery | 3,098,760 |
| $CO_2$ supply | 2,673,930 |
| Sour water stripper | 29,990 |

TABLE A-6

COOLING WATER REQUIREMENTS FOR
IGT/AIR-BLOWN/CONOCO PROCESS

| Description | Flows, lb/hr |
|---|---|
| Boiler feed water to demineralizers | 289,093 |
| Make-up cooling water | 3,336,457 |
| Cooling tower circulating water | 190,654,765 |
| Evaporation losses from cooling tower | 2,859,821 |
| Cooling tower blowdown | 285,982 |
| Drift losses from cooling tower | 190,654 |
| **Cooling Water Requirements for Process Gasification Units** | |
| Acid gas removal | 604,758 |
| Sulfur recovery | 3,323,670 |
| $CO_2$ supply | 2,873,850 |
| Sour water stripper | 32,487 |

6,675 gpm, respectively. The make-up water to the cooling tower for gasification systems for the above three processes is about 340, 220, and 240 gpm, respectively. The total cooling water supply (recirculating water) for the gasification systems for each process is BCR/Air-Blown/Conoco, 13,675; BCR/Oxygen-Blown/Conoco, 12,740; and IGT/Air-Blown/Conoco, 19,310 gpm.

The molten salt process, which is different from the above processes, requires a cooling water supply to the power system condenser of about 243,750 gpm. A separate cooling tower supplies 45,700 gpm of cooling water to the gasification system and off-site facilities.

The BCR/Air-Blown/Selexol process and the water system associated with it are described below. The other two processes, BCR/Oxygen-Blown/Selexol and IGT/Air-Blown/Selexol, operate similarly with the exception of differing flow-rate values. Water will enter the raw storage pond at 7,810 gpm. The lined reservoir will hold 170 million gallons, about a two-week holdup. The process will require 6,240 gpm, and approximately 20 percent of the total inflow to raw storage pond, 1,250 gpm, will consist of auxiliary water requirements such as mine and offsite needs, and storage pond evaporation losses.

## Boiler Feedwater

The process water from the raw storage ponds is broken into two major streams. One of the streams, having a flowrate of about 889 gpm, flows to the demineralizer; the second goes to the cooling towers. The demineralized water is used for generating the necessary steam for the process. Steam is utilized in the gasifier to supply hydrogen and is used in the ammonia recovery unit for the tower reboilers. Sour water strippers require a steam flow of about 1.0 to 1.2 lb per gallon of sour water entering the unit. About 4.5 percent of the water entering the demineralizers is used as regenerant and rinse water. A high steam flow rate is required to drive the steam turbines of the COGAS system. However, most of the steam is condensed and recycled to the boilers. Only 64 gpm of fresh water will be needed to make-up the boiler blowdown. Modern, high-pressure boilers have blowdown rates of 0.1 to 1.0 percent of the total steam generated.

## Cooling Water

Most of the cooling water make-up is the fresh water from the reservoir. Of 6,184 gpm water required for the cooling tower make-up, 5,355 gpm comes from the reservoir. This water will be passed through cold lime treating if the total dissolved solids concentration is high. Since lime treatment for the water is not essential in this study, it is not included in the flowsheets. The rest of the total cooling tower make-up water, about 13 percent, is the water recovered and recycled from the process itself.

Raw gas from the gasifiers will contain unreacted steam, part of which originated from the moisture in the coal and part of which was input for

gasificaton. The raw gas is free of any tars and oils, but may contain trace amounts of organics. The gasifier raw gas will be cooled in a heat recovery system and further scrubbed with water to remove ammonia.

The scrubber water will then be stripped to recover ammonia. Part of this treated water is reused in the scrubber and the rest is passed to the cooling tower. Organics that may be present will be degraded in the cooling tower. The water from the stripping section accounts for 4 percent of the total make-up.

The second reuse system in the process consists of the boiler and cooling tower blowdown treatment. Blowdown from all boilers in the plant will be collected and reused as make-up to the cooling tower. All the boilers in the plant will run to a limit of the allowable concentration of silica. Because cooling towers can operate at a higher silica limit than boilers, blowdown from the boilers can be used in the cooling towers. The cooling tower blowdown water will have a high concentration of dissolved and suspended solids. The suspended solids are removed in a settling tank. When the excess water from stripping section and boiler blowdown water is combined with the cooling tower blowdown, the total dissolved solids concentration of the combined recycle water is less than cooling tower blowdown alone, and can be used in the cooling tower without treatment.

Cooling water is required for removing excess heat from process units such as acid gas removal, sulfur recovery and ammonia recovery. A temperature rise of about 15 to 20 F is allowed for the water circulating through the heat exchangers. The heated water is cooled in the cooling towers and then recirculated in the heat exchangers. A separate cooling tower will be used for this purpose.

### Slag Handling System

The coal entering the gasifiers will be about 8.7 percent ash. This non-reactive ash will go through the gasifier and leave in the form of slag. The slag, at a high temperature, is cooled by water sprayed at the bottom of the gasifier. The cooled slag is further quenched in a slag quench tank. Rinse water from the demineralizers will be treated in the neutralization tank. This stream and the blowdown from the settling tank can be used to quench the slag. The slag-water mixture can be further concentrated in the clarifier. The water recovered will then be recycled to the quench tank.

## SOUR WATER STRIPPING

The raw gas from the gasifier is scrubbed in a water scrubber. The scrubber may be packed-bed tower or a tray tower. Almost all ammonia and part of the $H_2S$ and $CO_2$ are absorbed in the water. Phenols, cyanides and organics may be present in the raw gas and also will appear in the sour water. Ammonia, a valuable by-product, is recovered by stripping. Since ammonia stripping is an integral part of the gasification process, two commonly used stripping processes, the two-stage All-Distillation Process and the Phosam-W Process, are described below.

## Sour Water Strippers

Sour water stripping is used to remove hydrogen sulfide and ammonia from sour waters. In the gasification plants, ammonia is mostly neutralized by carbon dioxide. Ammonia must be removed from the sour water to a level low enough to conform to the effluent regulations for wastewater. It should be collected separately because it interferes with the Claus sulfur recovery process. Since sulfur is a saleable commodity, it should be collected in a salable form. $H_2S$ cannot be vented to the atmosphere; instead, it must be collected and sent to the sulfur recovery plant. Sour water may also contain organic acids, sulfide oxidation products, and phenols and cyanides, some of which interfere with ammonia and hydrogen sulfide separation. Phenols, if present in high concentrations, are removed by solvent extraction prior to stripping. However, phenols are not present in the raw gas of the gasification processes considered in this study. If present, their concentration will be low.

A conventional sour water stipper is shown in Figure A-2. In general, the stripper contains 10 to 20 actual trays. In some cases, packed towers are employed. Heat integration is common between the feed and bottom stream, and the bottoms are either reboiled or stripped with live steam at a rate usually in the range 10-24 lb steam/100 lb water. The stripper overhead is condensed to produce an off-gas suitable for further treatment in a sulfur plant and a reflux which is either returned to the top tray in the tower or the feed drum. Because of its low solubility, hydrogen sulfide can be stripped more readily than ammonia. A temperature of 230°F will remove more than 90 percent of ammonia. However, 90 percent of hydrogen sulfide removal requires a temperature of only 100°F. In a single stage (tower) sour water stripping operation, ammonia must be separated from the $CO_2$ and $H_2S$ vapors. This may be done by absorbing the ammonia in sulfuric acid, which will produce crystalline ammonium sulfate for sale. Another procedure is to absorb the ammonia in phosphoric acid or ammonium phosphate.

## Two-Stage All-Distillation Process

This proprietary process, developed by Chevron Research, uses two stripping columns for the recovery of high-purity ammonia and hydrogen sulfide from sour waters as separate by-products. The process has been in successful commercial use since 1966 and a number of commercial installations are in operation.

The process flow diagram is shown in Figure A-3. The stripped water from the process is 99.9 percent water by weight with less than 50 ppm ammonia and 10 ppm $H_2S$. The $H_2S$ stream is suitable for feed to plants producing sulfur or sulfuric acid without further treatment. High purity ammonia can be produced in either aqueous or anhydrous liquid form, depending on the desired end-use market.

A typical performance feed rate of 134 gpm is given below (the numbers represent the stream numbers on Figure A-3):

## CONVENTIONAL SOUR WATER STRIPPING PROCESS

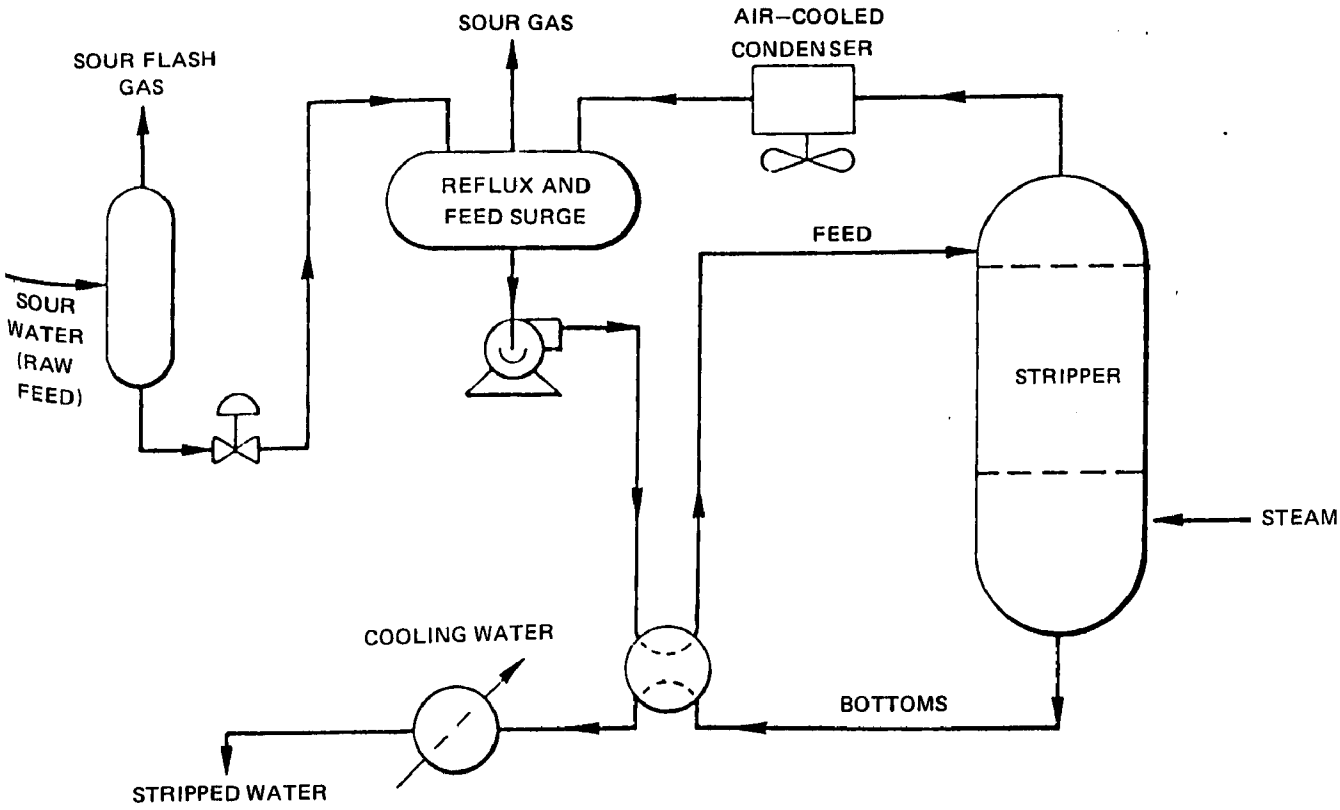


78–02–138–7

## TWO STAGE ALL–DISTILLATION PROCESS

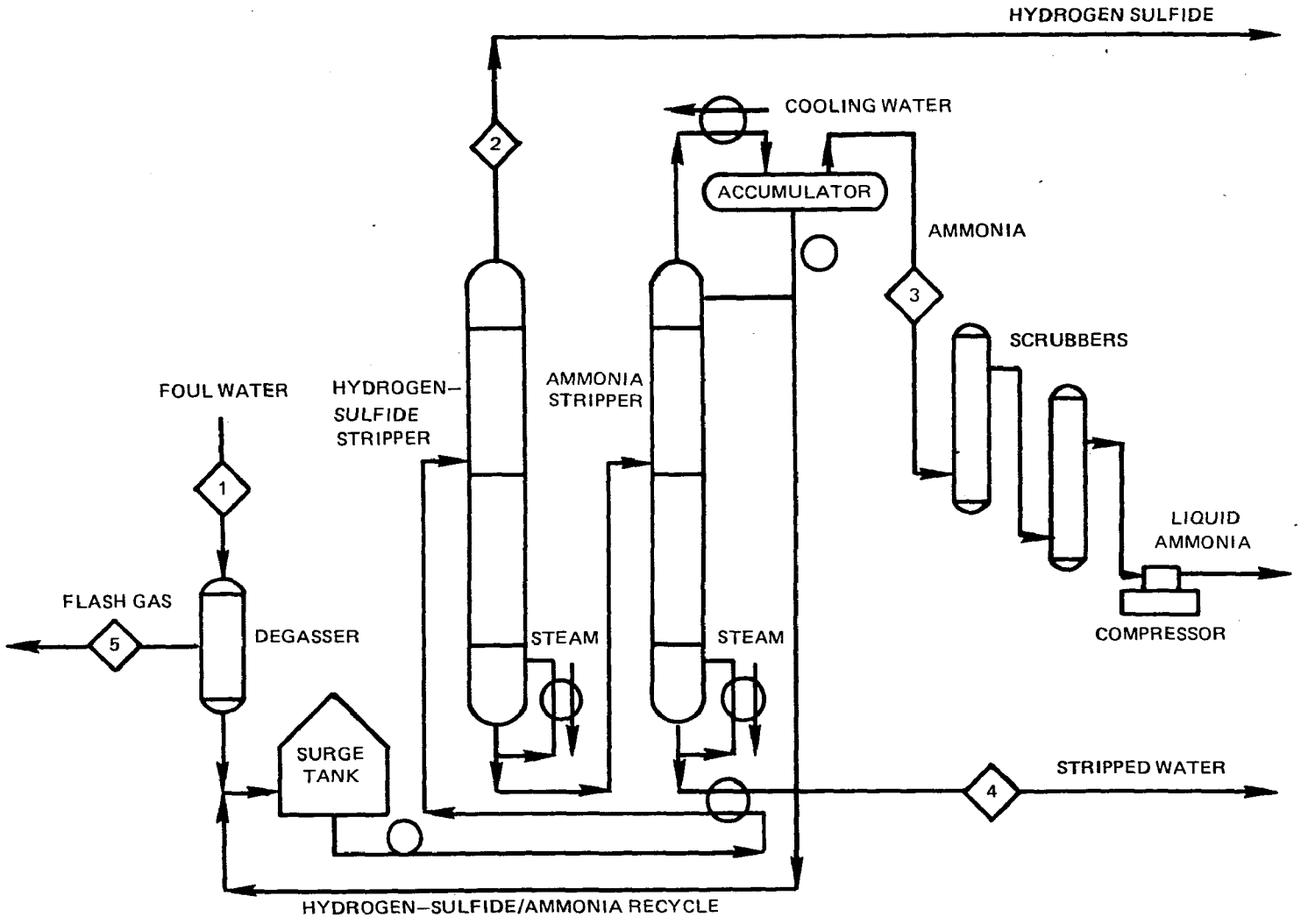


FIG. A–3



78–02–138–8

Feed (Stream-1)

| | |
|---|---|
| Feed rate | 134 gpm |
| Dissolved material, by weight | 3.8 percent |
| Dissolved ammonia, by weight | 3-5.5 percent |
| Dissolved $H_2S$, by weight | 4-5.5 percent |
| Dissolved hydrocarbons | ---------- |

Stripped $H_2S$ (Stream-2)

| | |
|---|---|
| Generation rate | 20.6 TPD |
| $H_2S$ by weight | 99.9 percent |
| $H_2O$ by weight | 0.1 percent |
| $NH_3$ by weight | 30 ppm |

Stripped $NH_3$ (Stream-3)

| | |
|---|---|
| Generation rate | 10.3 TPD |
| $NH_3$ by weight | 99.9 percent |
| $H_2O$ by weight | 0.1 percent |
| $H_2S$ by weight | 1 ppm |

Stripped Water (Stream-4)

| | |
|---|---|
| $H_2O$ by weight | 99.9 percent + |
| $H_2S$ by weight | 10 ppm |
| $NH_3$ by weight | 50 ppm |

Flash Gas (Stream-5)

Contains light hydrocarbons like $CH_2$, $C_2H_6$

Heat Requirements $3.9 \times 10^5$ Btu

Phosam-W Process

The Phosam-W process, developed by U.S. Steel, removes ammonia from waste-waters containing acid gases by using phosphoric acid as a stripping medium rather than the commonly used sulfuric acid. Phosphoric acid, with three bound hydrogen atoms, can bind ammonium ions tightly enough for absorption, but loosely enough for ammonia recovery via stripping.

Figure A-4 is a flowsheet of the Phosam-W process. Feed, consisting of water with dissolved ammonia and acid gas is preheated in two streams, and recombined to enter the stripping section of the superstill. The low-pressure (4 psig) stripping section removes both ammonia and acid gases from the water. The superstill bottoms, with an ammonia content of less than 200 ppm, is recycled to the preheater to heat part of the wastewater feed. Indirect steam, at 60 psig, provides most of the energy input to the superstill stripper.

## PHOSAM–W PROCESS FOR AMMONIA SEPARATION

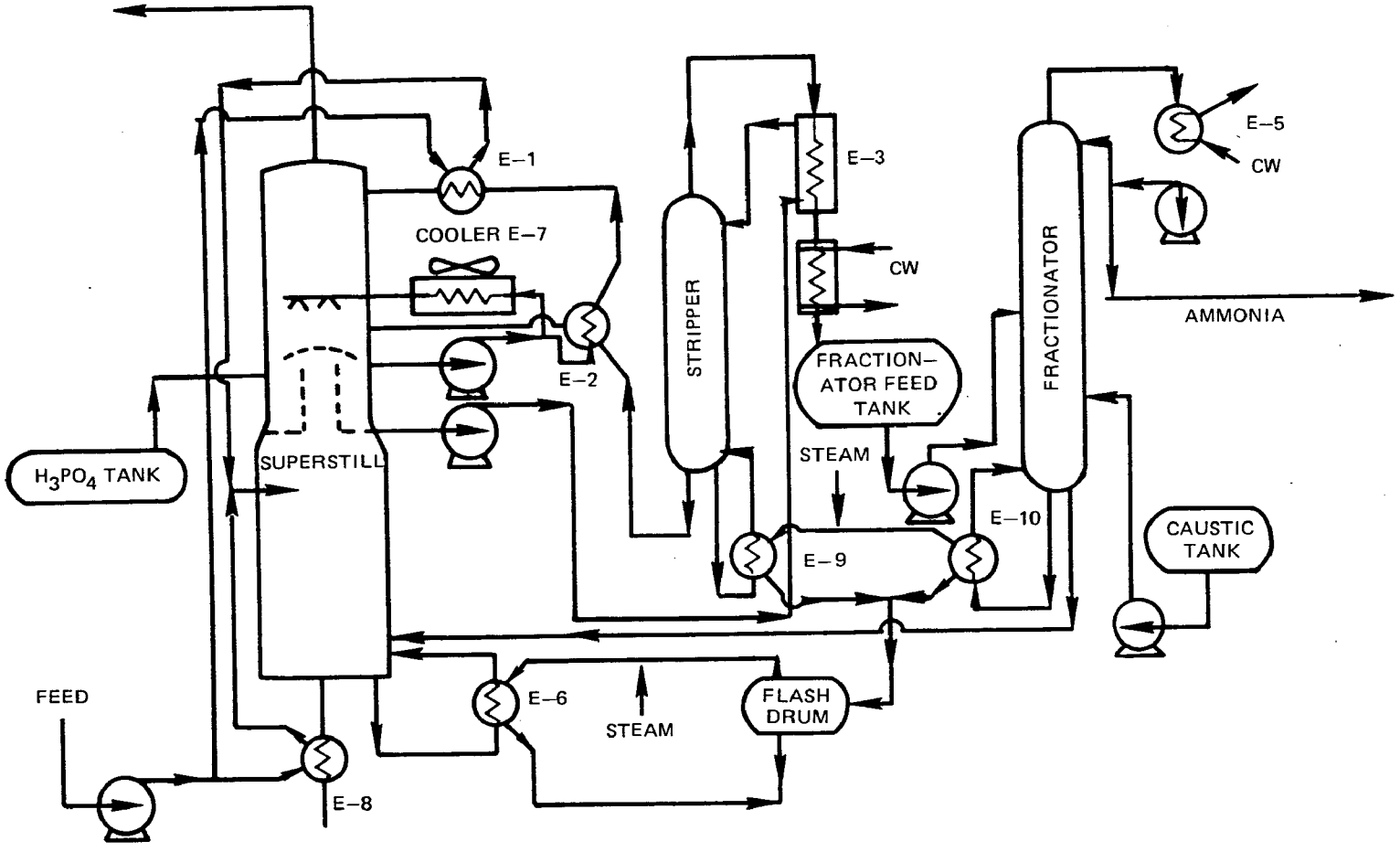


FIG. A–4



78–02–138–9

Vapor from the superstill stripper section rises, entering the absorber section of the superstill. The vapor is contacted with a spray of cool ammonium phosphate solution. Scrubbing continues in the tray section of the absorber where gas and lean ammonium phosphate solution contact counter-currently.

A solution exchanger in the bottom of the absorber purges acid gases from the rich solution. The rich solution is then pumped to the stripper. Overhead vapors from the stripper transfer energy to the rich solution before it enters the stripper.

The high pressure stripper shifts the equilibrium of the stripping reaction, thereby removing more ammonia from the rich solution. The resulting lean solution is recycled to the tray section of the superstill absorber. Steam at 600 psig provides the heat for the stripper reboiler.

The vapor exiting the top of the stripper is 10 to 20 weight percent ammonia. The vapor is fed to a two-stage condenser. The first condenser stage heats the stripper feed. Cooling water absorbs heat energy in the second condenser stage. The resulting condensate passes to the fractionator feed tank from which it is pumped to the fractionator. The aqua-ammonia condensate is distilled into a 99.99 percent pure ammonia overhead fraction and a 0.05 percent ammonia bottoms fraction. Accumulation of trace quantities of acid gases and organics in the fractionator is prevented by adding caustic sodium hydroxide solution to the system, thereby assuring a high purity product. Hot water exiting the bottom of the fractionator is pumped to the bottom of the superstill to provide energy.

## Sour Water Treatment Configuration and Cost

The generation, pretreatment and stripping of sour water for the combined cycle systems are shown in Figure A-5. Part of the unreacted feed steam condenses while passing through the heat recovery system and is separated from the gas in water knock-out drums. The gaseous mixture is then scrubbed with recycle water to remove ammonia. Ammonia removal is necessary to reduce the total plant $NO_x$ producton during low-Btu fuel gas combustion. With the ammonia, some $H_2S$ and $CO_2$ also dissolve in the scrubbing water. Entrained char particles will be removed by the scrubbing water. Removal of char particles is necessary to limit absorption on the turbo-generator blades and to reduce particulate emissions during low-Btu gas combustion. Water collected in the knockout drums and scrubber water is passed through gravity settling tanks to remove char particles. The solids-free stream is decanted, filtered, then passed to the stripping columns. Water condensate from the acid gas removal section also will be sent to the stripping columns. $H_2S$ first will be stripped, then sent to the sulfur recovery process. Ammonia is stripped off in the separate column and can be recovered as aqueous ammonia by quenching it with water. About 1 to 2 pounds of steam will be required for $H_2S$ and ammonia removal. The treated water will be free of suspended particles, ammonia and hydrogen sulfide. Part of the treated water is recycled to the scrubber and the rest is utilized in cooling towers.

## SOUR WATER GENERATION AND TREATMENT

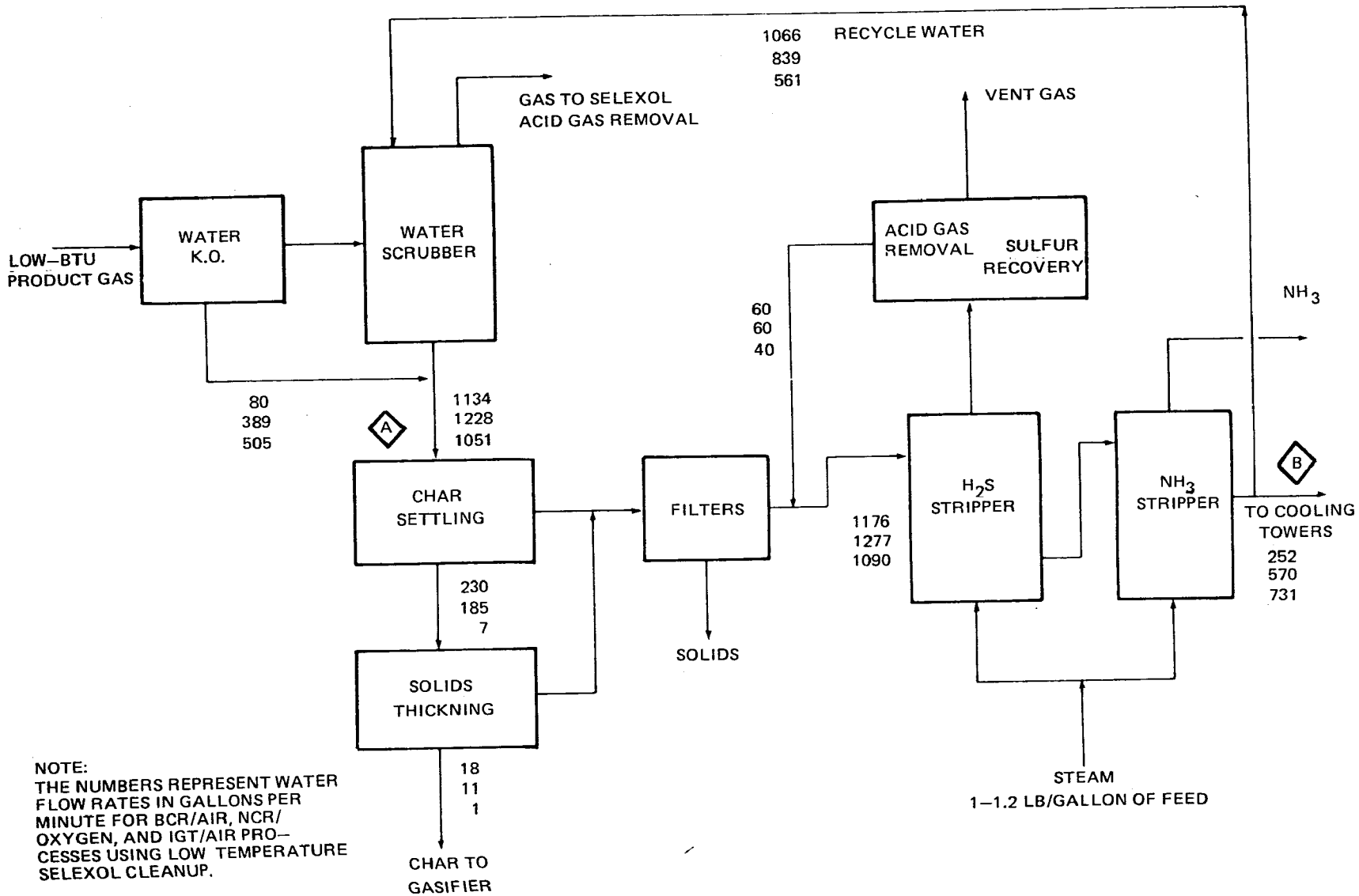


NOTE:
THE NUMBERS REPRESENT WATER FLOW RATES IN GALLONS PER MINUTE FOR BCR/AIR, NCR/OXYGEN, AND IGT/AIR PROCESSES USING LOW TEMPERATURE SELEXOL CLEANUP.

78–02–138–10

FIG. A–5

The characterization of the inlet and outlet streams as shown in Figure A-5 is given in Tables A-7 to 9. The characteristics of the streams are based on the data published in the Office of Coal Research (OCR) report on coal gasification for combined cycle pilot plants. The cyanide, phenol, and organic concentrations of the sour water in this report were based on complex calculations of thermal equilibrium determining trace compounds in the gasifier produce gas. All of these components were assumed, as a worst case, to be absorbed into the plant sour water.

The capital cost for ammonia separation by the Two Stage Distillation Process and the Phosam-W Process for the three processes is shown in Table A-10. These costs are based on the cost figures estimated for different throughput by Water Purification Associates (Reference A-1).

BOILER FEEDWATER TREATMENT

Raw water initially will be pumped to a storage reservoir. The reservoir also serves as a flow equalizer and a clarifier which removes the suspended solids present in the natural water. At this stage the water going to the process is split into two streams, the smaller going to the demineralizers and the larger one to the cooling towers. The amount of demineralized water required depends on the total steam consumption of the process. Steam is required for gasification, sour water stripping and sulfur recovery. Boiler and demineralizer blowdowns have to be considered when estimating the boiler feed water stream. In general, the raw water to demineralizers can be estimated by summing up the total steam consumption and the boiler and demineralizer blowdowns.

The deminerlizers are used in the treatment scheme to remove ionic species and silica from boiler feedwater by exchanging these species with hydrogen, sodium and hydroxyl ions on solid resins. The resins are then regenerated by $H_2SO_4$, NaCl and NaOH, enabling their continued use and reuse over long periods. The most widely used ion exchange materials are resins of styrene-divinyl-benzene copolymers. The ion exchange resins play an important role in determining the process economics and demineralization capabilities. A summary of pertinent data for conventional ion exchange resins (Reference A-2) is presented in Table A-11. Also, a conventional demineralizer system is shown in Figure A-6.

There are a number of schemes that can be considered to optimize water demineralization. Two schemes are presented in Figure A-7. In Scheme 1, $Ca^{++}$, $Mg^{++}$, $HCO_3^-$ and $SiO_2$ are removed by a hot lime treatment. $Ca^{++}$ is further removed by a softening resin. Demineralization is carried out in successive steps with strong acid and weak base exchange followed by a mixed bed. In Scheme 2, the water is first treated with a weak acid ion exchange resin to remove $Ca^{++}$, $Mg^{++}$ and some $Na^+$, and to replace these ions with $H^+$. The hydrogen ions release $CO_2$ from $HCO_3^-$, which is removed in the degasifier. Additional removal of $Ca^{++}$ is required with a softening resin. Demineralization requires a strong acid resin followed by a weak base resin. A strong base resin is used for removal of $SiO_2$ and a mixed bed system is used for final polishing. Scheme 2 makes more efficient use of regeneration chemicals and costs less. A return condensate polishing system will be

TABLE A-7

FLOW CHARACTERIZATION FOR BCR/AIR-BLOWN/SELEXOL SOUR WATER TREATMENT
(SEE FIG. A-5)

| STREAM COMPONENT | A LB/HR | A WT PPM | B LB/HR | B WT PPM |
|---|---|---|---|---|
| $H_2O$ | 235,720 | -- | 125,950 | -- |
| $H_2S$ | 1,030 | 2,811 | 3 | 25 |
| $NH_3$ | 8,154 | 22,260 | 6 | 50 |
| $CO_2$ | 19,743 | 58,898 | 3 | 25 |
| Phenols | 3 | 8 | 1 | < 8 |
| Organics | 12 | 33 | 4 | < 30 |
| Cyanides | 7 | 19 | 1 | < 5 |
| Suspended Solids | 2,880 | 7,862 | 1 | < 5 |
| Non-Condensibles | 38 | 103 | -- | -- |
| TOTAL | 267,389 | | 125,963 | |

*TABLE A-8*

FLOW CHARACTERIZATION FOR BCR/OXYGEN-BLOWN/SELEXOL SOUR WATER TREATMENT
(SEE FIG. A-5)

| STREAM COMPONENT | A LB/HR | A WT PPM | B LB/HR | B WT PPM |
|---|---|---|---|---|
| $H_2O$ | 613,750 | -- | 284,890 | -- |
| $H_2S$ | 1,080 | 1,670 | 6 | 21 |
| $NH_3$ | 8,390 | 12,980 | 12 | 42 |
| $CO_2$ | 20,716 | 32,044 | 6 | 21 |
| Phenols | 4 | 6 | 1.7 | < 6 |
| Organics | 20 | 30 | -- | < 30 |
| Cyanides | 12 | 18 | -- | < 5 |
| Suspended Solids | 2,445 | 3,780 | -- | < 5 |
| Non-Condensibles | 64 | 100 | -- | -- |
| TOTAL | 646,481 | | 284,916 | |

TABLE A-9

FLOW CHARACTERIZATION FOR IGT/AIR-BLOWN/SELEXOL SOUR WATER TREATMENT
(SEE FIG. A-5)

| STREAM COMPONENT | A LB/HR | A WT PPM | B LB/HR | B WT PPM |
|---|---|---|---|---|
| $H_2O$ | 525,290 | -- | 365,354 | -- |
| $H_2S$ | 337 | 632 | 1 | 3 |
| $NH_3$ | 701 | 1,315 | 2 | 6 |
| $CO_2$ | 6,284 | 11,793 | 1 | 3 |
| Phenols | 5 | 9 | -- | < 5 |
| Organics | 25 | 45 | -- | < 3 |
| Cyanides | 10 | 18 | -- | < 5 |
| Suspended Solids | 175 | 315 | -- | < 5 |
| Non-Condensibles | 35 | 63 | -- | -- |
| TOTAL | 532,867 | | 365,358 | |

TABLE A-10

COST ESTIMATION OF SOUR WATER TREATMENT

| COGAS Process | BCR/Air-Blown/Selexol | BCR/Oxygen-Blown/Selexol | IGT/Air-Blown/Selexol |
|---|---|---|---|
| Throughput, $10^6$ gal/day | 1.5 | 1.7 | 1.4 |
| **Two Stage Distillation Process** | | | |
| Total Equipment Cost, $10^6$ $ | 3.9 | 4.2 | 3.5 |
| **Phosam-W Process** | | | |
| Total Equipment Cost, $10^6$ $ | 3.1 | 3.1 | 2.6 |
| **Operating Costs for Phosam-W Process** | | | |
| | | Costs ($/thousand gallons) | |
| Capital charges including maintenance at 17% yr (330 days/yr) | 1.94 | 1.76 | 1.33 |
| Energy at $1.80/$10^6$ Btu | 3.06 | 3.06 | 3.06 |
| Caustic soda | 0.04 | 0.04 | 0.04 |
| Phosphoric acid | 0.01 | 0.01 | 0.01 |
| | 5.05 | 4.87 | 4.44 |

TABLE A-11

SUMMARY OF PERTINENT DATA FOR CONVENTIONAL ION EXCHANGE RESINS

| Ion Exchange Resins | Discussion | Flow Rate [(m³/day)/m²] | Flow Rate (gpm/ft³) | Regeneration Chemical | Regeneration (kg/m³) | Regeneration (lb/ft³) | Typical Ion Typical Capacity (Kg/m³) | Typical Ion Typical Capacity (Kgr/ft³) |
|---|---|---|---|---|---|---|---|---|
| Cation Exchange Resins (Hydrogen or Acid Form) | | | | | | | | |
| Sulfonic Acid (Strong Acid) | All feed water cations are removed | 4-5 | 8-10 | $H_2SO_4$ | 80 | 5 | 25 | 11 |
| | | | | $H_2SO_4$ | 176 | 11 | 57 | 25 |
| | | | | HCl | 160 | 10 | 69 | 30 |
| Carboxylic Acid (Weak Acid) | Cation removal is limited to quantities equivalent to the amount of weak anion (bicarbonate) that is present in the feed water. | 3 | 6 | $H_2SO_4$ | 160 | 10 | 137 | 60 |
| | | | | HCl | 112 | 7 | 137 | 60 |
| Anion Exchange Resins (Hydroxyl or Base Form) | | | | | | | | |
| Strong Base | Anions of both strong and weak mineral acids are subject to greater physical degradation than are macro porous resins | | | | | | | |
| Type I - Gel Type | | 3 | 6 | NaOH | 64 | 4.0 | 25 | 11 |
| Type II - Gel Type | | 3 | 6 | NaOH | 64 | 4.0 | 48 | 21 |
| Type I - Marco Process | | 3 | 6 | NaOH | 64 | 4.0 | 23 | 10 |
| Type II - Marco Process | | 3 | 6 | NaOH | 64 | 4.0 | 41 | 18 |
| Weak Base Aliphatic Amine | Anions of strong mineral acids are removed. Anions of weak mineral acids such as $CO_2$, $SiO_2$ are not removed. | 3 | 6 | NaOH | 59 | 3.7 | 66 | 29 |
| | | | | $NH_4OH$ | 51 | 3.2 | 66 | 29 |
| | | | | $Na_2CO_3$ | 79 | 4.9 | 66 | 29 |
| Styrene Copolymer | | 4 | 8 | NaOH | 48 | 3.0 | 48 | 21 |
| | | | | $NH_4OH$ | 43 | 2.7 | 48 | 21 |
| | | | | $Na_2CO_3$ | 64 | 4.0 | 48 | 21 |

## CONVENTIONAL TWO–BED ION EXCHANGE PROCESS

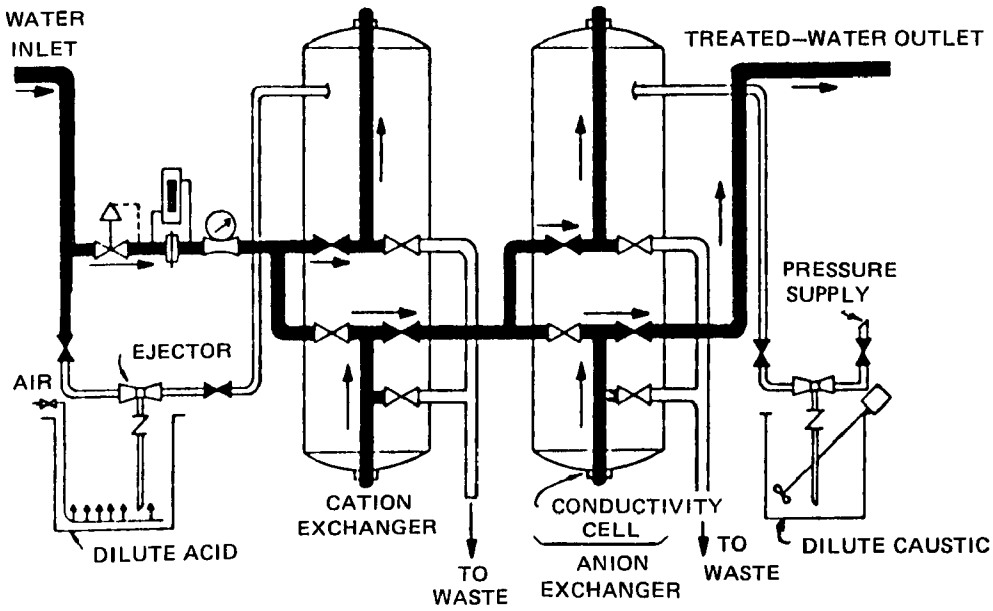


78–02–138–11

## BOILER FEED WATER TREATMENT SCHEMES

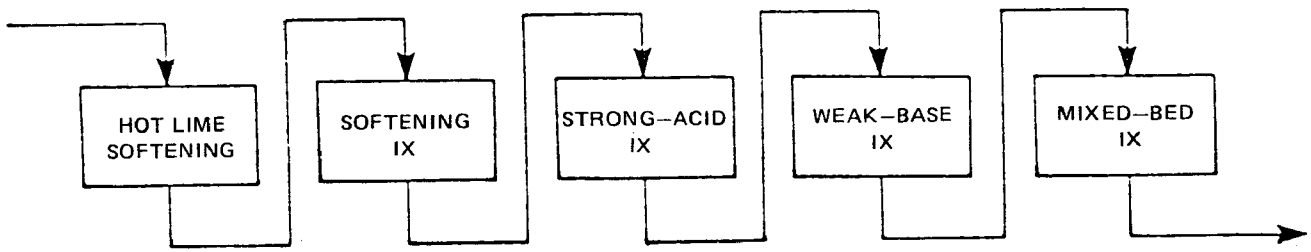


SCHEME I

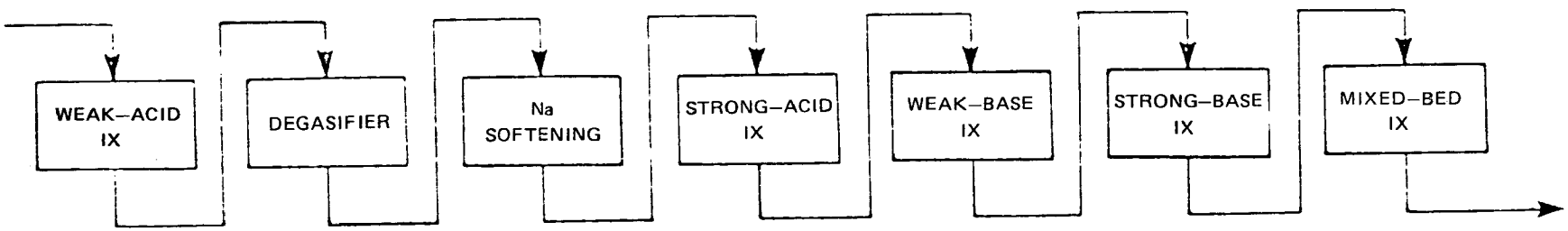


SCHEME 2

IX = ION EXCHANGER

FIG. A–7



78–02–138–12

required, but this is inexpensive. A raw water analysis is shown in Table A-12, the performance characterisitics of Scheme 2 are shown in Table A-13.

The deionized water will be used to generate steam at various pressures. The gasifier requires steam at 420 psig. Acid gas removal and ammonia recovery utilize steam at 50 psig and at 420 psig. The steam turbines will require steam at pressures above 1000 psig. The quality requirements for boiler feedwater at different pressures are shown in Table A-14. The deionized water produced by the Scheme 2 as mentioned above meets these boiler feedwater quality requirements.

Boiler Feedwater Treatment Cost

A cost summary for Scheme 2 demineralization, including the cost of chemicals for the three processes considered, is shown in Table A-15. The following costs are given for regenerating chemicals (¢ = cents): $H_2SO_4$, 3.8 ¢/lb; NaOH, 8.3 ¢/lb; and NaCl, 2.0 ¢/lb. The treatment costs were estimated by using the cost data published by Water Purification Associates (Reference A-1) (the treatment by Scheme 2 costs about $3.2 x $10^5$ for a flow rate of 869,000 lb/hr including resin replacement).

Reverse Osmosis for Boiler Feedwater Treatment

Reverse osmosis systems combined with demineralizers have proven to be cost effective in power plant feedwater use. Such a combination scheme for boiler feedwater treatment is used by some utility companies with an observed savings in the operating cost of more than one-third the conventional system. With the reverse osmosis unit operating upstream, the demineralizers produce five to ten times more deionized water between regenerations, and require less manpower to operate and maintain. In addition, the chemical requirements are lowered, thereby waste-disposal problems are minimized. Ion exchange resins operate with improved performance and extended life.

Figure A-8 shows the conventional demineralizer system and the combined reverse osmosis (RO)/demineralizer system, with a flow rate of 420,000 gpm; Table A-16 compares the cost (Reference A-3) of the two systems. The savings in chemical costs alone justifies application of the combined system.

A new approach to boiler feedwater treatment is the use of RO without demineralizers. Such a system has been operating for more than two years at a Texas petrochemical plant. The system, which feeds the boiler operating at 600 psi, produces deionized water from brackish well water containing 550 ppm dissolved solids. The 110,000 gpd system provides a 90 percent rejection at 85 percent recovery. The operating costs have ranged between 60 cents and 70 cents per thousand gallons.

COOLING TOWER WATER TREATMENT

The total make-up water to the cooling tower is primarily fresh water from the source, but also includes recycled water from the settling tank, boiler blowdown and the stripped water from the ammonia stripping section.

TABLE A-12

RAW WATER ANALYSIS

| Component | Composition | as $CaCO_3$ |
|---|---|---|
| pH | 7.6 | |
| Total Dissolved Solids | 400 mg/l | |
| Bicarbonate ($HCO_3^-$) | 180 mg/l | 147.6 |
| Sulfate ($SO_4^{2-}$) | 90 mg/l | 93.6 |
| Chloride ($Cl^-$) | 170 mg/l | 239.7 |
| Nitrate ($NO_3^-$) | 4.2 mg/l | -- |
| Calcium (Ca) | 52 mg/l | 130.0 |
| Magnesium (Mg) | 14 mg/l | 57.4 |
| Sodium and Potassium (Na, K) | 85 mg/l | 147.1 |
| Iron (Fe) | 0.7 mg/l | 1.3 |
| Silica ($SiO_2$) | 8.8 mg/l | -- |
| Dissolved Oxygen ($O_2$) | 9.8 mg/l | -- |
| Ammonia ($NH_3$) | 2.5 mg/l | -- |
| Specific conductivity at 25°C | $1.1 \times 10^{-3}$ mho | -- |

TABLE A-13

PERFORMANCE CHARACTERISTICS FOR SCHEME 2
BOILER FEED WATER DEMINERALIZATION*

| Component | After Weak Acid IX and Degasifier | After Softening | After Strong Acid Weak-Base Demineralization | Acid Strong-Base IX Silica Removal |
|---|---|---|---|---|
| CA + Mg | 20 | 0 | 0 | 0 |
| Na | 69 | 99 | 44 | 4 |
| Cl | 170 | 170 | 0 | 0 |
| $HCO_3$ | 0 | 0 | 0 | 0 |
| $SO_4$ | 90 | 90 | 1 | 0 |
| $SiO_2$ | 9 | 9 | 9 | <1 |

*All Values in ppm

TABLE A-14

QUALITY REQUIREMENTS FOR BOILER FEEDWATER(1)

| Characteristics | Boiler Feedwater: Quality of water prior to the addition of substances used for internal conditioning — Industrial: Low pressure 0 to 150 psig | Industrial: Intermediate pressure 150 to 700 psig | Industrial: High pressure 700 to 1,500 | Electric Utilities: 1,500 to 5,000 psig |
|---|---|---|---|---|
| Silica ($SiO_2$) | 30 | 10 | 0.7 | 0.01 |
| Aluminum (Al) | 5 | 0.1 | 0.01 | 0.01 |
| Iron (Fe) | 1 | 0.3 | 0.05 | 0.01 |
| Manganese (Mn) | 0.3 | 0.1 | 0.01 | (4) |
| Calcium (Ca) | (2) | (3) | (3) | (4) |
| Magnesium (Mg) | (2) | (3) | (3) | (4) |
| Ammonia ($NH_4$) | 0.1 | 0.1 | 0.1 | 0.7 |
| Bicarbonate ($HCO_3$) | 170 | 120 | 48 | (4) |
| Sulfate ($SO_4$) | (2) | (2) | (2) | (4) |
| Chloride (Cl) | (2) | (2) | (2) | (4) |
| Dissolved solids | 700 | 500 | 200 | 0.5 |
| Copper (Cu) | 0.5 | 0.05 | 0.05 | 0.01 |
| Zinc (Zn) | (3) | (3) | (3) | (4) |
| Hardness ($CaCO_3$) | 20 | (3) | (3) | (3) |
| Free mineral acidity ($CaCO_3$) | (3) | (3) | (3) | (3) |
| Alkalinity ($CaCO_3$) | 140 | 100 | 40 | (3) |
| pH, units | 8.0-10.0 | 8.2-10.0 | 8.2-9.0 | 8.8-9.2 |
| Color, units | (2) | (2) | (2) | (2) |
| Organics: | | | | |
| Methylene blue active substances. | 1 | 1 | 0.5 | (3) |
| Carbon tetrachloride extract. | 1 | 1 | 0.5 | (3) |
| Chemical oxygen demand ($O_2$) | 5 | 5 | 0.5 | (3) |
| Dissolved oxygen ($O_2$) | 2.5 | 0.007 | 0.007 | 0.007 |
| Temperature, F | (2) | (2) | (2) | (2) |
| Suspended solids | 10 | 5 | (2) | (3) |

(1) Unless otherwise indicated, units are mg/l and values that normally should not be exceeded. No one water will have all the maximum values shown.

(2) Accepted as received (if meeting total solids or other limiting values): has never been a problem at concentrations encountered.

(3) Zero, not detectable by test.

(4) Controlled by treatment for other constituents.

TABLE A-15

COST SUMMARY FOR DEMINERALIZATION OF BOILER FEED WATER

| Process | Demineralizer Capacity (gpm) | Demineralizers Annual Operating (Cost $) | Chemicals Required lb/hr | | | Total Operating Cost $ |
|---|---|---|---|---|---|---|
| | | | $H_2SO_4$ | NaOH | NaCl | |
| BCR/Air-Blown Selexol | 886.5 | 163,250 | 160 | 76 | 48 | 275,520 |
| BCR/Oxygen-Blown Selexol | 1073.4 | 197,440 | 194 | 91 | 58 | 325,440 |
| IGT/Air-Blown Selexol | 1533.2 | 282,240 | 277 | 131 | 83 | 466,240 |

## CONVENTIONAL DEMINERALIZER AND RO/DEMINERALIZER SYSTEMS FOR BOILER FEEDWATER TREATMENT

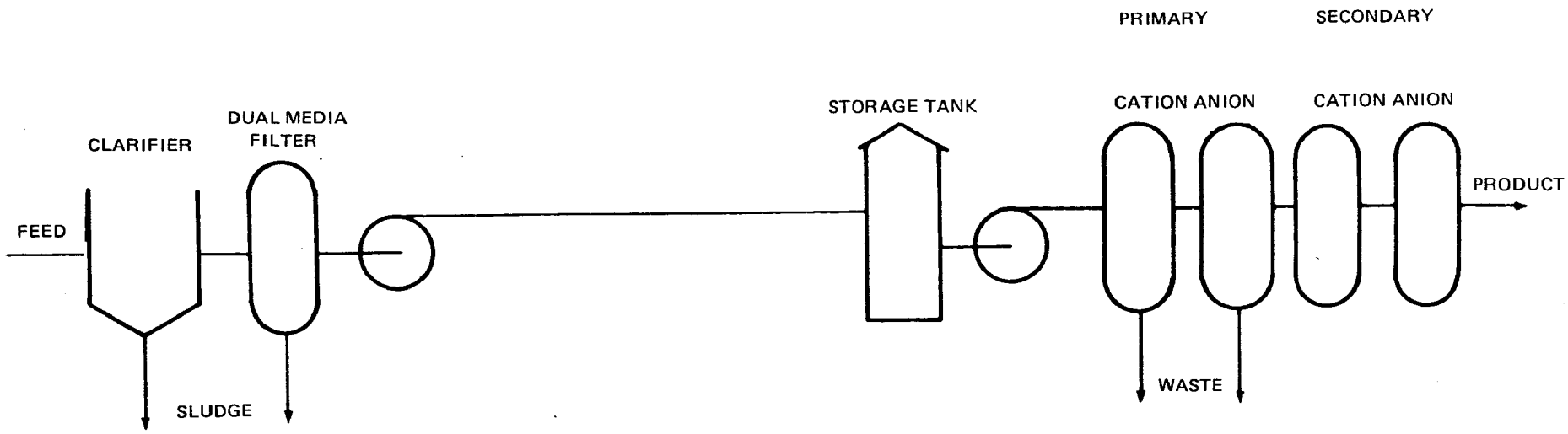


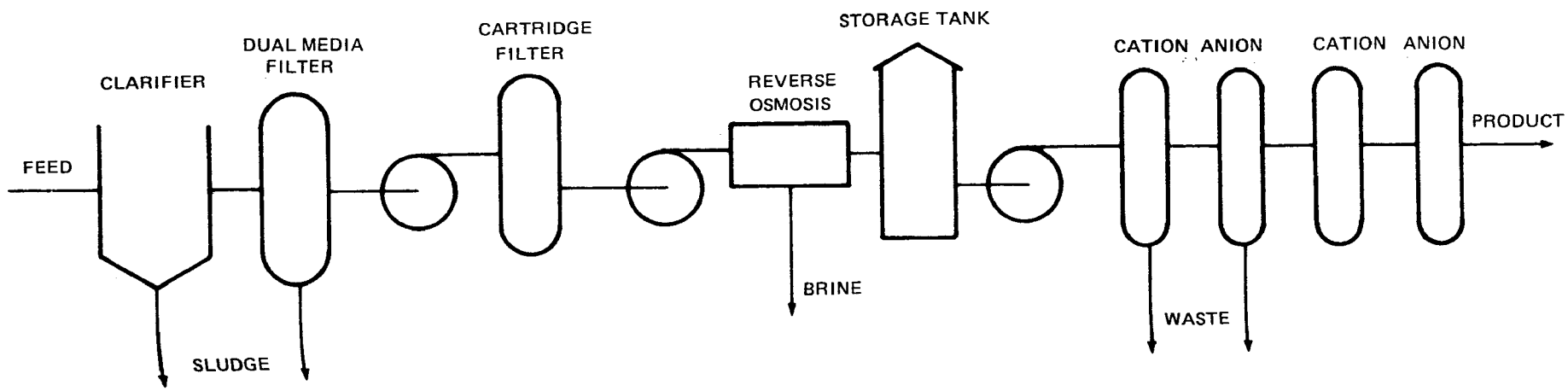


FIG. A-8

TABLE A-16

COST COMPARISON OF CONVENTIONAL DEMINERALIZER AND R/O DEMINERALIZER SYSTEMS

| | Conventional | | RO/Demineralizer | |
|---|---|---|---|---|
| | $/yr | $1000/gal | $/yr | $1000/gal |
| Capital | $160,230 | 1.015 | $168,430 | 1.067 |
| Labor | 96,000 | 0.608 | 96,000 | 0.608 |
| Maintenance | 50,000 | 0.317 | 50,000 | 0.317 |
| Pretreatment Chemicals | 46,460 | 0.294 | 46,440 | 0.294 |
| Demineralization, Chemicals | 176,680 | 1.094 | 15,880 | 0.101 |
| Resin | 32,310 | 0.205 | 8,950 | 0.057 |
| Modules | ---- | --- | 30,880 | 0.196 |
| Waste Chemicals | 81,300 | 0.515 | 2,570 | 0.016 |
| Power | 12,430 | 0.079 | 40,270 | 0.255 |
| Total | 651,410 | 4.13 | 459,420 | 2.91 |

Cost based on water containing 960 ppm TDS.

Cooling tower water is treated to prevent scaling, fouling, microbial growth and corrosion. The control limits for cooling tower circulating water are given in Table A-17.

The raw water may contain a high concentration of $HCO_3^-$, sometimes referred to as "alkalinity". Removal of bicarbonate prior to using the water in cooling towers will prevent scaling. The simplest way to accomplish this is to add sulfuric acid. One pound of $HCO_3^-$ requires 0.8 lb $H_2SO_4$ for treatment. Although simple, this is an expensive treatment, in that it causes a waste of biocides and anticorrosion chemicals in the cooing tower blowdown.

Chemical precipitation is also a feasible pretreatment option for fresh water. This method reduces dissolved solids comprised of heavy-metal or hardness ions. Lime, soda-ash or caustic is added in softeners to precipitate the hardness. Cold lime softening is commonly employed. This restricts frequent cooling tower blowdowns and conserves the water conditioning chemicals.

The impact of pretreating cooling tower make-up is summarized in Table A-18. This table presents chemical analysis of lime-softened water, and recirculating water at 6 and 13 cycles of concentration. The quality of make-up water shown in this table is different from the quality of raw water considered. The analyses for both cases favor sulfuric acid addition for control of calcium carbonate. Calcium sulfate solubility, therefore, limits the cooling water concentration. Note that the scaling potential of calcium sulfate (as indicated by the solubility product of total calcium and sulfate in solution) is identical for each case by virtue of softening pretreatment. Operation at 13 rather than 6 cycles of concentration in this example reduces the tower blowdown by approximately 57 percent.

## Cooling Tower Make-up Water Treatment Costs

The cost of cooling water by simple sulfuric acid treatment and by lime pretreatment for the processes considered is summarized in Table A-19. The following cost data has been used.

### Sulfuric Acid Treatment

$H_2SO_4$ required for removal of 1 lb of $HCO_3$ = 0.8 lb.

$H_2SO_4$ cost = 3.8 cents/pound

Biocides cost = $\$1/10^3$ gallons of blowdown

### Lime Treatment

Lime cost = 2.7 cents/pound

Biocides cost = $\$0.50/10^3$ gallons of blowdown

Anticorrosion chemicals = $\$0.50/10^3$ gallons of blowdown

TABLE A-17

CONTROL LIMITS FOR COOLING TOWER
CIRCULATING WATER COMPOSITION

| Parameters | Limits Minimum | Limits Maximum | Remarks |
|---|---|---|---|
| Langelier Saturation Index | +0.5 | +1.5 | Nonchromate programs |
| Ryznar Stability Index | +6.5 | +7.5 | Nonchromate programs |
| pH | 6.0 | 8.0 | |
| Calcium, mg/l as $CaCO_3$ | 20-50 | 300 | Nonchromate program |
| | | 400 | Chromate program |
| Total iron, mg/l | | 0.5 | |
| Manganese, mg/l | | 0.5 | |
| Copper, mg/l | | 0.08 | |
| Aluminum, mg/l | | 1 | |
| Suflide, mg/l | | 5 | |
| Silica, mg/l | | 150 | For pH 7.5 |
| | | 100 | For pH 7.5 |
| $(Ca) \cdot (SO_4)$, product | | 500,000 | Both calcium and sulfate expressed as mg/l $CaCO_3$ |
| Total dissolved solids, mg/l | | 2,500 | |
| Conductivity, micromhos/cm | | 4,000 | |
| Suspended solids, mg/l | | 100-150 | |

TABLE A-18

IMPACT OF SOFTENING COOLING TOWER MAKE-UP WATER

| Constituent | As | Plant Makeup | Following Primary Treatment | Circulating Waters Concentrations at 6 | Circulating Waters Concentrations at 13 |
|---|---|---|---|---|---|
| Calcium | $CaCO_3$ | 232 | 49 | 1392 | 640 |
| Magnesium | $CaCO_3$ | 135 | 121 | 810 | 1580 |
| Sodium | $Na^+$ | 117 | 175 | 702 | 2409 |
| Bicarbonate | $CaCO_3$ | 129 | 0 | 35 | 35 |
| Carbonate | $CaCO_3$ | - | 35 | - | - |
| Sulfate | $SO_4^=$ | 345 | 355 | 2685 | 5821 |
| Chloride | $Cl^-$ | 94 | 94 | 564 | 1221 |
| Silicate | $SiO_2$ | 17 | 10 | - | - |
| Total | | | | | |
| Hardness | $CaCO_3$ | 367 | 170 | 2202 | 2200 |
| pH | - | 8-8.3 | 8-9 | 6.5-7 | 6.5-7 |
| Turbidity | - | 5-20 | 5-10JTU | - | - |
| $K_{sCaSO_4}$* | - | - | - | $3.73 \times 10^6$ | $3.73 \times 10^6$ |

*$K_{sCaSO_4}$ = solubility product of calcium sulfate
= $(C_{Ca^{++}})\ (C_{SO_4^=})$
where $(C_{Ca^{++}})$ = total calcium in solution, ppm as $CaCO_3$
$(C_{SO_4})$ = total sulfate in solution, ppm as $SO_4^=$

TABLE A-19

COOLING TOWER WATER TREATMENT COST

| Operating Cost $/hr | BCR/Air-Blown/ Selexol | BCR/Oxygen-Blown/ Selexol | IGT/Air-Blown/ Selexol |
|---|---|---|---|
| $H_2SO_4$ Treatment | 62.3 | 52.4 | 57.1 |
| Lime Treatment | 38.6 | 36.5 | 36.6 |

## Lime Treatment (Cont'd)

Flocculation chemicals = $0.30/1000 gallons of blowdown

Dispersant chemicals = $0.15/1000 gallons of blowdown

Table A-19 shows that the operating cost of cooling water treatment by lime pretreatment is about 60-70 percent of the cost of sulfuric acid treatment. However, lime treatment requires an initial capital investment of about one million dollars for the clarifiers and the side stream filter.

## Sidestream Softening of Cooling Water

The amount of cooling tower blowdown can be greatly reduced by using side-stream treatment, such as lime softening and filteration. This method, shown in Figure A-9, treats the most concentrated water in the cooling tower. As a result, the amount of water treated is significantly less than the pretreatment of the make-up water. The system consists of an upflow, solids-contact reactor/clarifier. This is followed by filteration, and the treated water is recirculated to the cooling tower. Calcium and magnesium bicarbonates and silica concentration are reduced by lime treatment. Calcium and magnesium bicarbonates and silica concentration are reduced by lime treatment. Calcium and magnesium sulfates can be removed by adding soda ash together with lime. Treatment of the blowdown for removal of zinc, chromate, and other potential pollutants is much more practical when applied to a small flow. The performance of a typical system having a circulating water flow rate of 500,000 gpm and a side stream flow rate of 2000 gpm shows that the treatment reduces hardness to 80-120 mg/l, silica to 10-20 mg/l, and suspended solids to 10-20 mg/l. Lime treated effluent is recarbonated and then filtered to 1-2 mg/l of suspended solids. Sludge from the clarifiers is settled, dewatered on a filter and used for landfill.

## SIDESTREAM SOFTENING OF COOLING WATER

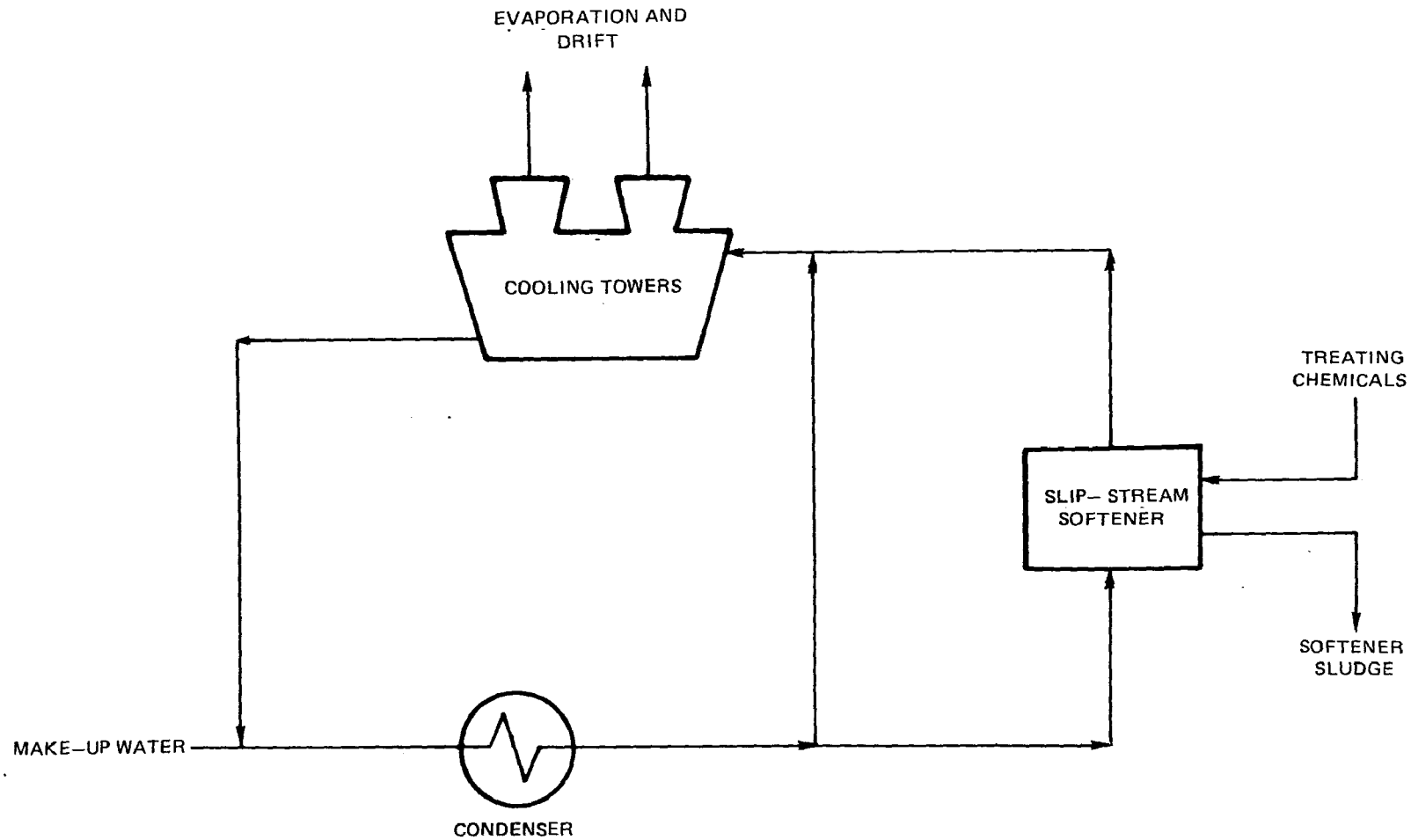


FIG. A–9



78–02–138–14

## REFERENCES


A-1 Goldstein, D. J. and David Yung: Water Conservation and Pollution Control in Coal Conversion Processes. EPA-600/7-77-065, (NTIS No. PB269-568), June, 1977.

A-2 Strauss, Sheldon D.: Water Treatment. Power, 117 (6) S1-S24 (1973).

A-3 Truby, Randy: Reverse Osmosis for Boiler Feedwater Treatment. Power Engineering, December, 1976, pp.58-60.

# APPENDIX B

## FUEL PROCESSING COST BASIS

Fuel processing costs for the low-temperature system were estimated by Fluor. The costs were estimated on a major component basis and an indication of the degree of detail considered is given in Table B-1. That table lists the major components that were considered in preparing an overall plant capital cost estimate.

TABLE B-1

EQUIPMENT LIST FOR AIR-BLOWN BCR PROCESS

Unit 10 - Coal Preparation and Handling

a. Coal Handling - one train required

| Item | Description |
|---|---|
| 10-BN-1 | Unloading Hopper |
| 10-CV-1 | Belt Conveyor |
| 10-CV-2 | Belt Conveyor |
| 10-TR-1 | Tripper |
| 10-ME-1 | Stacking System |
| 10-ME-2 | Reclaiming system |
| 10-CV-3 | Belt Conveyor |

b. Coal Pulverization - one train required

| | |
|---|---|
| 10-CV-4 | Belt Conveyor |
| 10-BN-2 | Pulverizer Feed Hopper |
| 10-1-V-1 | Transport Gas |
| 10-2-V-1 | Heater |
| 10-2-ME-3 | Pulverization System |
| 10-2-ME-3 | |
| 10-BN-3A, B, C & D | Pulverized Coal Storage Silos |

## Unit 20 - Gasification and Ash Handling

a. Gasification - five trains required (four operating and one spare) with each train consisting of the following:

| Item | Description |
|---|---|
| **Vessels** | |
| 20-1-V-1A & B | Coal Feed Lock Hoppers |
| 20-1-V-2 | High Pressure Coal Feed Hopper |
| 20-1-V-3A & B | Slag Lock Hoppers |
| 20-1-V-4 | Char Separator |
| 20-1-V-5 | Char Cooler |
| 20-1-V-6A & 6B | Char Transport Drums |
| 20-1-V-7A & 7B | Slag Hoppers |
| **Reactors** | |
| 20-1-R-1 | Gasifier |
| **Pumps** | |
| 20-1-P-1 | HP Quench Water Pump |
| **Compressors** | |
| 20-1-C-1 | Transport Gas Compressor |
| **Storage Bins** | |
| 20-1-BN-1 | Coal Feed Surge Bin |
| **Mechanical Equipment** | |
| 20-1-ME-1 | Bag Filter |

b. Ash Handling - one train required

| | |
|---|---|
| **Cooling Tower** | |
| 20-CT-1 | Cooling Tower |
| **Bins** | |
| 20-BN-2 | Dewatering Bin |

b. Ash handling - one train required (continued)

| Item | Description |
|---|---|
| **Tanks** | |
| 20-TK-1 | Transfer Tank |
| 20-TK-2 | Settling Tank |
| **Pumps** | |
| 20-P-2 | Quench Water Supply Pump |
| 20-P-3 | Quench Water Return Pump |
| 20-P-4 | Settling Tank Bottoms Pump |
| 20-P-5 | Jet Ejector Water Pump |
| 20-P-6 | Transfer Tank Bottoms Pump |

## Unit 21 - Gas Cooling and Particulate Removal

a. Gas Cooling and Particulate Removal - high temperature gas cooling section consisting of 21-1-E-1, 21-1-E-2, 21-1-E-3, 21-1-V-1 and 21-1-P-1 have four operating and one spare trains and remainder of system has four operating trains and no spare. Each train consists of the following:

| | |
|---|---|
| **Vessels** | |
| 21-1-V-1 | HP Steam Drum |
| 21-1-V-2 | Particulate Scrubber |
| 21-1-V-3 | K.O. Drum |
| 21-1-V-4 | Ammonia Absorber |
| **Exchangers** | |
| 21-1-E-1 | HP Boiler |
| 21-1-E-2 | Gasifier Effluent/Product Gas Exchanger |
| 21-1-E-3 | BFW Preheater |
| 21-1-E-4 | BFW Make-Up Heater |
| 21-1-E-5 | Demineralized Water Preheater |
| **Pumps** | |
| 21-1-P-1 | HP Boiler Circulation Pump |
| 21-1-P-2 | Particulate Scrubber Circulation Pump |

b. Char Recovery - one train required

| Item | Description |
|---|---|
| Pumps | |
| 21-1-P-3 | Char Slurry Recycle Pump |
| Mechanical Equipment | |
| 21-ME-1 | Secondary Char Recovery Unit |

## Unit 22 - Acid Gas Removal System

Data supplied by Allied Chemical Co.

## Unit 23 - Sulfur Plant and Tail Gas Treating

a. Sulfur Plant

A total of three parallel trains (two operating and one spare) required with each train consisting of the following:

| | |
|---|---|
| Furnace | |
| 23-1-H-1 | Sulfur Furnace and Waste Heat Boiler |
| Reactors | |
| 23-1-R-1 | Converter No.1 |
| 23-1-R-2 | Converter No.2 |
| Exchangers | |
| 23-1-E-1 | Condenser No. 1 |
| 23-1-E-2 | Condenser No. 2 |
| Blowers | |
| 23-1-BL-1 | Air Blower |
| Pumps | |
| 23-1-P-1 | Sulfur Transfer Pump |
| Sump | |
| 23-1-S-1 | Sulfur Sump |

b. Tail Gas Treating

A total of three trains required (two operating and one spare) with each train consisting of the following:

| Item | Description |
|---|---|
| **Heater** | |
| 23-1-H-2 | Tail Gas Heater |
| **Reactor** | |
| 23-1-R-3 | $SO_2$ Converter |
| **Vessels** | |
| 23-1-V-1 | Absorber/Quench Vessel |
| 23-1-V-2 | Sulfur Decanter |
| **Exchangers** | |
| 23-1-E-3 | Reactor Effluent Cooler |
| 23-1-E-4 | Quench Circulating Cooler |
| 23-1-E-5 | Regenerated Solution Cooler |
| **Blowers** | |
| 23-1-BL-2 | Air Blower |
| **Pumps** | |
| 23-1-P-2 | Quench Water Circulating Pump |
| 23-1-P-3 | Regenerated Solution Pump |
| 23-1-P-4 | Froth Slurry Pump |
| 23-1-P-5 | Filter Cake Pump |
| **Tanks** | |
| 23-1-TK-1 | Oxidizer Tank |
| 23-1-TK-2 | Froth Trank |

## Unit 24 - Sour Water Treating and Ammonia Recovery

One train required.

| Item | Description |
|---|---|
| **Vessels** | |
| 24-V-1 | Superstill |
| 24-V-2 | Ammonia Stripper |
| 24-V-3 | Ammonia Fractionator |
| 24-V-5 | Fractionator Feed Tank |
| 24-V-6 | Flash Drum |
| **Tanks** | |
| 24-TK-1 | Phosphoric Acid Storage Tank |
| 24-TK-2 | Caustic Storage Tank |
| **Exchangers** | |
| 24-E-1 | Lean Solution Cooler |
| 24-E-2 | Solution Exchanger |
| 24-E-3 | Stripper Condenser |
| 24-E-4 | Condensate Subcooler |
| 24-E-5 | Fractionator Condenser |
| 24-E-6 | Superstill Reboiler |
| 24-E-7 | Absorber Cooler |
| 24-E-8 | Bottoms Cooler |
| 24-E-9 | Stripper Reboiler |
| 24-E-10 | Fractionator Reboiler |
| 24-E-11 | Reflux Condenser Cooler |
| 24-E-12 | Feed Preheater |
| **Pumps** | |
| 24-P-1 | Absorber Circulation Pump |
| 24-P-2 | Rich Solution Pump |
| 24-P-3 | Fractionator Feed Pump |
| 24-P-4 | Fractionator Reflux Pump |
| 24-P-6 | Superstill Bottoms Pump |
| 24-P-7 | Reflux Condenser Pump |

# APPENDIX C

## POWERPLANT COST ANALYSIS

Previous studies demonstrated the need for a capability to provide cost estimates for future power systems that not only would enable power stations with different operating characteristics to be considered, but also would allow sensitivity studies to be undertaken for differing technical characteristics of the selected systems. As a result, members of the technical staff at UTRC, in cooperation with cost estimators at Burns & Roe, Inc., developed a set of correlations based on historical data which enable the total installed cost of COGAS power stations to be estimated in-house with a high degree of confidence. The procedure consists of a set of equations, grouped by Federal Power Commission (FPC) account numbers, which can be used to calculate the installed costs of major power station equipment.

Minor component equipment items are combined in logical groups, the costs of which are also estimated from correlation equations. The calculation procedure requires input data which are normally calculated as part of a routine technical analysis for electric power stations. Examples of such data include: gross and net station output power; steam turbine output power; gas turbine output power; cooling water flow rates; subcomponent input power requirements; and station efficiency. Because the cost correlations have been developed in sufficient detail, the need to resort to expensive preliminary system layout drawings is eliminated.

As part of the overall analysis, the costs of a few major components are estimated by methods other than the correlations described since these alternative methods make it possible to determine these specific equipment costs in even greater detail. Two such components are the large, industrial gas turbines and waste heat boilers, the costs of which are calculated using sophisticated computer program analyses proprietary to UTRC.

Furthermore, the costs of large, "standard" items such as steam turbogenerators and electric generators are obtained directly from published catalog data, which are corrected by appropriate price multiplier factors to maintain consistency with the latest industry experience.

A detailed list of all system components whose prices are capable of being estimated directly is presented in Table C-1 for all applicable FPC power station account categories. Not all items are used for each COGAS system considered since often there are specific characteristics of each station design which distinguish it from other stations. In the UTRC procedure, allowances are also made for such items as station start-up, temporary buildings, transportation during construction, special tools required during a particular power station contract, engineering, contingency, escalation (except where included in the cost of selected major system components), and interest during construction. Examples of typical resulting costs are shown to the right of each category. The example used is the air-blown BCR type gasifier with low-temperature cleanup which was the basic system of interest in this study.

TABLE C-1

POWER SYSTEM COST BREAKDOWN

FPC No. 341: Structures and Improvements

| | |
|---|---|
| Site Preparation | 1,209,000 |
| Administration Building | 805,000 |
| Gas Turbine Building | 1,088,000 |
| Turbogenerator Building | 3,738,000 |
| Circulating Water System | 1,438,000 |
| Stack | 1,724,000 |
| | 10,002,000 |

FPC No. 312 Boiler Plant Equipment

| | |
|---|---|
| Waste Heat Boiler | 56,365,000 |
| Boiler Feed Pumps | 741,000 |
| Boiler Feedwater Tank and Deaerator | 87,000 |
| Demineralizer | 906,000 |
| Condensate Storage Tank | 39,000 |
| Misc. Pumps | 156,000 |
| Piping | 12,265,000 |
| Insulation for Piping | 981,000 |
| Controls | 992,000 |
| | 72,532,000 |

FPC No. 314 Turbogenerator Unit

| | |
|---|---|
| Turbogenerator | 23,616,000 |
| Condenser, Tube & Ejector | 1,585,000 |
| Condenser Vacuum Pumps & Motor | 221,000 |
| Condenser Pumps & Drive Motor | 80,000 |
| Cooling Tower | 7,550,000 |
| Circulating Water System | 1,412,000 |
| | 34,464,000 |

TABLE C-1 (Cont'd)

Power System Cost Breakdown

FPC No. 343 Gas Turbine

| | |
|---|---|
| Gas Turbine | 46,038,000 |
| Air Start System | 180,000 |
| Coupling to Generator | 125,000 |
| Lube Oil Purification System | 137,000 |
| Lube Oil Filtration | 112,000 |
| Turbine Air Precooler | 603,000 |
| Service Air Compressor | 160,000 |
| Breeching | 3,540,000 |
| Expansion Joints | 2,064,000 |
| Inlet Air Filters | 472,000 |
| Turbine Enclosure Air Cooler | 120,000 |
| Emergency Cooling Water System | 12,000 |
| Misc. Pumps & Tanks | 28,000 |
| Control Panels | 300,000 |
| Computer | 300,000 |
| Fuel Piping | 1,501,000 |
| Fuel Pipe Insulation | 225,000 |
| | 55,917,000 |

FPC No. 341 Generator for Gas Turbine

14,863,000

FPC No. 345 Accessory Electrical Equipment
353 Station Equipment

17,620,000

FPC No. 346 Misc. Powerplant Equipment

526,000

## TECHNICAL REPORT DATA
*(Please read Instructions on the reverse before completing)*

| | | |
|---|---|---|
| 1. REPORT NO. EPA-600/7-78-088 | 2. | 3. RECIPIENT'S ACCESSION NO. |
| 4. TITLE AND SUBTITLE Fuel Gas Environmental Impact: Final Report | | 5. REPORT DATE June 1978 |
| | | 6. PERFORMING ORGANIZATION CODE |
| 7. AUTHOR(S) F. L. Robson and W. A. Blecher (UTRC); and V. B. May (Hittman Associates) | | 8. PERFORMING ORGANIZATION REPORT NO. |
| 9. PERFORMING ORGANIZATION NAME AND ADDRESS United Technologies Research Center Silver Lane East Hartford, Connecticut 06108 | | 10. PROGRAM ELEMENT NO. EHE623A |
| | | 11. CONTRACT/GRANT NO. 68-02-2179 |
| 12. SPONSORING AGENCY NAME AND ADDRESS EPA, Office of Research and Development Industrial Environmental Research Laboratory Research Triangle Park, NC 27711 | | 13. TYPE OF REPORT AND PERIOD COVERED Final; 9/76-12/77 |
| | | 14. SPONSORING AGENCY CODE EPA/600/13 |

15. SUPPLEMENTARY NOTES IERL-RTP project officer is Thomas W. Petrie, Mail Drop 61, 919/541-2708. EPA-600/76-153 and -/75-078 are earlier, related reports.

16. ABSTRACT The report gives results of continued investigation and further definition of the potential environmental and economic benefits of integrated coal gasification/gas cleanup/combined gas and steam cycle power plants. Reported refinements in plant operating characteristics lower heat rates and reduce emissions from previous values. An expanded study of plant environmental intrusions includes a look at potentially hazardous trace elements. Comparisons made of integrated plants using air- and oxygen-blown gasifiers favor air-blowing. Careful theoretical design of plants with low temperature sulfur cleanup reduces to marginal levels the performance and cost advantages of plants with high temperature cleanup. If gasifier steam feed rates are kept low in all but fixed bed types, choice of gasifier among other major generic types is not critical to achieving attractive systems using low temperature cleanup. Excessive thermal NOx emissions may be avoided by departing from conventional combustor designs. Fuel NOx and particulates still pose problems with use of high temperature cleanup. Sulfur removal to very low levels is possible with integrated systems, but cost rises rapidly as it becomes necessary to remove most of the COS as well as the H2S.

17. KEY WORDS AND DOCUMENT ANALYSIS

| a. DESCRIPTORS | | b. IDENTIFIERS/OPEN ENDED TERMS | c. COSATI Field/Group | |
|---|---|---|---|---|
| Pollution | Desulfurization | Pollution Control | 13B | 07D |
| Coal Gasification | Nitrogen Oxides | Stationary Sources | 13H | 07B |
| Gas Purification | Dust | Environmental Impact | 07A | 11G |
| Fuels | Chemical Analysis | Fuel Gas | 21D | |
| Toxicity | | Particulate | 06T | |
| Trace Elements | | | 06A | |

| | | |
|---|---|---|
| 18. DISTRIBUTION STATEMENT Unlimited | 19. SECURITY CLASS *(This Report)* Unclassified | 21. NO. OF PAGES 357 |
| | 20. SECURITY CLASS *(This page)* Unclassified | 22. PRICE |

EPA Form 2220-1 (9-73)