EPA-650/2-74-082
SEPTEMBER 1974

Environmental Protection Technology Series

REFINERY CATALYTIC CRACKER REGENERATOR SO_x CONTROL PROCESS SURVEY

Office of Research and Development
U.S. Environmental Protection Agency
Washington, DC 20460

EPA-650/2-74-082

REFINERY CATALYTIC CRACKER REGENERATOR SO_X CONTROL PROCESS SURVEY

by

T. Ctvrtnicek, T. Hughes,
C. Moscowitz, and D. Zanders

Monsanto Research Corporation
Dayton Laboratory
Dayton, Ohio 45407

Contract No. 68-02-1320
Task 1, Phase I
ROAP No. 21ADC-031
Program Element No. 1AB013

EPA Project Officer: Kenneth Baker

Control Systems Laboratory
National Environmental Research Center
Research Triangle Park, North Carolina 27711

Prepared for

OFFICE OF RESEARCH AND DEVELOPMENT
U.S. ENVIRONMENTAL PROTECTION AGENCY
WASHINGTON, D.C. 20460

September 1974

This report has been reviewed by the Environmental Protection Agency and approved for publication. Approval does not signify that the contents necessarily reflect the views and policies of the Agency, nor does mention of trade names or commercial products constitute endorsement or recommendation for use.

ABSTRACT

The report gives results of a survey of conceptual techniques applicable to fluid catalytic cracker (FCC) regenerator off-gas sulfur oxide emission reduction, with respect to their application both to the FCC system itself and to the regenerator off-gas. These two control techniques have also been compared with FCC feedstock desulfurization. The economics for all systems evaluated are compared. A comprehensive analysis of FCC operations has produced evidence that sulfur emission control can most effectively be achieved through steam contacting of the spent cracking catalyst. This concept is therefore proposed as the primary subject for further investigation.

TABLE OF CONTENTS

	Page
1. INTRODUCTION	1
2. SUMMARY	3
3. THE FLUID CATALYTIC CRACKING PROCESS	5
3.1 PROCESS DESCRIPTION	5
3.1.1 Principal Operations	5
3.1.2 Cracking Catalyst	9
3.1.3 Catalyst Stripping and Regeneration	12
3.2 TYPES OF FLUID CATALYTIC CRACKING UNITS	16
3.3 SIZE AND CAPACITY OF FLUID CATALYTIC CRACKING UNITS	20
3.4 EMISSIONS FROM FCC UNITS	22
3.4.1 General	22
3.4.2 Basis for Comparison	24
3.4.3 Predicting SO_2 Emission	25
3.5 SUMMARY OF ASSUMPTIONS	28
3.5.1 Technical Assumptions	29
3.5.2 Economic Assumptions	29
4. FCC FEED DESULFURIZATION	32
4.1 TECHNICAL EVALUATION	32
4.2 ECONOMIC EVALUATION	34
5. PROCESS MODIFICATION	39
5.1 SUMMARY OF CONCLUSIONS	39
5.2 PROCESS MODIFICATION ANALYSIS	43

TABLE OF CONTENTS (Continued)

	Page
5.2.1 Evidence of Effects of Steam Stripping on Sulfur Distribution in Fluid Catalytic Cracking	46
5.2.2 Theoretical Aspects of Steam Stripping	54
5.3 APPLICATION OF STEAM STRIPPING TO EXISTING FCC UNITS	59
5.3.2 Secondary (Add-On) Separate Steam Stripper	61
5.3.3 Application of Secondary Steam Stripping (Option 1)	64
5.3.4 Control of Other Pollutants with Steam Stripping	66
6. REGENERATOR FLUE GAS DESULFURIZATION	70
6.1 SUMMARY OF CONCLUSIONS	71
6.2 CANDIDATE PROCESS SELECTION	73
6.3 GENERAL CONSIDERATIONS IN EVALUATION OF THE SELECTED PROCESSES	83
6.3.1 Technical Evaluations	83
6.3.2 Economic Evaluation	87
6.4 ADSORBENT/ABSORBENT SYSTEMS	88
6.4.1 Westvaco Process	89
6.4.1.1 SO_2 Production Process Description	90
6.4.1.2 Sulfur Production Process Description	95
6.4.1.3 Experimentation Needed and Proposed by Westvaco	100
6.4.1.4 Economics	101
6.4.1.5 Comments	105

TABLE OF CONTENTS (Continued)

	Page
6.4.2 Shell Flue Gas Desulfurization Process	106
6.4.2.1 Process Description	106
6.4.2.2 Economics	111
6.4.2.3 Comments	111
6.4.3 Union Carbide PuraSiv-S Process	115
6.4.3.1 Process Description	115
6.4.3.2 Economics	118
6.4.3.3 Comments	118
6.5 SCRUBBING SYSTEMS	121
6.5.1 Wellman-Lord Sodium Sulfite Absorption	122
6.5.1.1 Process Description	122
6.5.1.2 Economics	130
6.5.1.3 Comments	130
6.5.2 Magnesium Oxide Scrubbing	134
6.5.2.1 Process Description	134
6.5.2.2 Economics	139
6.5.2.3 Comments	139
6.6 OXIDATION SYSTEM	142
6.6.1 CAT-OX Catalytic Oxidation	142
6.6.1.1 Process Description	142
6.6.1.2 Economics	148
6.6.1.3 Comments	148

TABLE OF CONTENTS (Continued)

		Page
REFERENCES		152
APPENDIX A	CRACKING CATALYSTS AND THEIR PRODUCERS	162
APPENDIX B	PREDICTION OF REGENERATOR OFF-GAS SO_2 CONCENTRATION	166
APPENDIX C	FEEDSTOCK DESULFURIZATION TECHNIQUES	170
APPENDIX D	ECONOMIC EVALUATION OF FCC FEEDSTOCK DESULFURIZATION - DETAILED ESTIMATES	181
APPENDIX E	ECONOMIC EVALUATIONS OF CATALYST STREAM CONTACTING (STRIPPING) - DETAILED ESTIMATES	190
APPENDIX F	ECONOMIC EVALUATION OF FLUE GAS DESULFURIZATION SYSTEMS - DETAILED ESTIMATES	211
APPENDIX G	EVALUATION FORM FOR ADD-ON FLUE GAS DESULFURIZATION SYSTEMS - DETAILED ESTIMATES	232
APPENDIX H	SINGLE UNIT CONVERSION FACTORS, BRITISH TO SI (METRIC)	236

LIST OF FIGURES

Figure		Page
1	Fluid Catalytic Cracking Unit	6
2	Processing Plan for Complete Modern Refinery	10
3	Catalyst Stripper	17
4	FCC Designs	19
5	SO_2 Concentration in FCC Regenerator Off-Gas	27
6	Hydrodesulfurization of FCC Feedstock, Capital Investment Cost (February 1973)	35
7	Hydrodesulfurization of FCC Feedstock, Operating Cost	36
8	Hydrodesulfurization of FCC Feedstock, Incremental Operating Cost	37
9	Distribution of Sulfur in FCC Products	49
10	Effects of Steam Stripping Rate on Sulfur Content of Coke (Natural Catalyst)	51
11	Improvement of Catalyst Activity and Selectivity with High Stripping-Steam Rate	53
12	Effect of Steam Stripping of Spent FCC Catalyst on SO_2 Concentration in Regenerator Off-Gas	55
13	Block Diagram for a Conceptual Steam Stripping Facility	63
14	FCC Catalyst Steam Stripping, Capital Investment Cost (February 1973)	67
15	FCC Catalyst Steam Stripping, Operating Cost	68
16	Westvaco Process - FCC Regenerator Waste Gas Treatment, SO_2 Production	91
17	Westvaco Process - FCC Regenerator Waste Gas Treatment, Conceptual Design Flowsheet	93

LIST OF FIGURES (Continued)

Figure		Page
18	Westvaco Process - FCC Regenerator Waste Gas Treatment, Elevation and Plot Plan	96
19	Westvaco Process - FCC Regenerator Waste Gas Treatment, Sulfur Production	97
20	Westvaco Process - FCC Regenerator Waste Gas Treatment, Pilot Plant Program Schedule	102
21	Westvaco Capital Investment Cost (February 1973)	103
22	Westvaco Operating Cost	104
23	Shell Flue Gas Desulfurization Unit	107
24	SFGD Capital Investment Cost (February 1973)	112
25	SFGD Operating Cost	113
26	PuraSiv-S Process Flow Diagram	116
27	PuraSiv-S Capital Investment Cost (February 1973)	119
28	PuraSiv-S Operating Cost	120
29	Wellman Lord, Inc., Sulfur Dioxide Recovery, Sodium System	124
30	Wellman Lord, Inc., Capital Investment Cost (February 1973)	131
31	Wellman-Lord, Inc., Operating Cost	132
32	Magnesia Slurry SO_2 Recovery Process	135
33	Magnesium Oxide Scrubbing Capital Investment Cost (February 1973)	140
34	Magnesium Oxide Scrubbing Operating Cost	141
35	CAT-OX Flow Diagram - Flue Gas Reheat System	143
36	CAT-OX Flow Diagram - High Temperature System	144

LIST OF FIGURES (Continued)

Figure		Page
37	CAT-OX Capital Investment Cost (February 1973)	149
38	CAT-OX Operating Cost	150

LIST OF TABLES

Table		Page
1	Capital and Operating Cost Summary for Systems to Control SO_x Emissions from Refinery Catalytic Cracker Regenerator	4
2	Fluid Catalytic Cracking Operating Ranges	8
3	Variations of Particle Distribution in Typical Fluid Cracking Catalysts	13
4	Design Conditions of Catalyst Strippers	18
5	Use of Various FCC Design Types	18
6	Summary of Refining and Catalytic Cracking Units in the United States as of January 1, 1973	21
7	Emission Ranges from Fluid Catalytic Cracking Unit Regenerator, Before and After CO Boiler	23
8	Comparison of Catalytic Cracking Units Operating Conditions	44
9	Flue Gas Desulfurization Processes	74
10	Flue Gas Desulfurization Processes After Classification According to Their Availability	82
11	Wellman-Lord SO_2 Recovery Process Development	123
12	Chemistry of Magnesia Slurry SO_2 Recovery Process	136

1. INTRODUCTION

To assist in their evaluation of air pollution technology applicable to catalytic cracker regenerator flue gas, the Environmental Protection Agency has contracted Monsanto Research Corporation to identify conceptual techniques for reducing petroleum refinery fluid catalytic cracker regenerator SO_x emissions to less than 200 ppm SO_2 and to perform a feasibility analysis of the techniques identified. This report contains the outcome of the first phase of this study.

This study was not aimed at development of sulfur oxides removal technology for the whole petroleum industry, or even for a specific refinery. Instead, our objective was to aid the Environmental Protection Agency in identifying the technology having the highest potential for application to this specific segment of the petroleum refining process and thus to allow the EPA to concentrate its research efforts on this technology, including eventual full-scale demonstration. Such a demonstration would then help to establish and define the emission standards for petroleum refineries. It should be noted that the process envisioned for demonstration is not intended to represent the only technology that will have to be applied by petroleum refiners. Rather, its primary purpose will be to demonstrate that the air pollution regulations to be established can be met. The refiners will be free to select and apply any technology producing comparable results.

In order to conduct the study most efficiently and to compare the selected SO_x control systems on an equal basis, FCC operating conditions had to be carefully defined. The FCC process, the types of units that have been developed, and the size of these units are

discussed in Section 3. The technical and economic assumptions applied throughout this study are also presented in that section.

Three approach alternatives to desulfurization of fluid catalytic cracker (FCC) regenerator flue gas were investigated. The first alternative process considered for SO_x control was desulfurization of the feed to the cracking operation to a degree that would result in sulfur emissions of 200 ppm. The second alternative, fluid catalytic process modification, required investigation and definition of the variables controlling this operation, especially those affecting sulfur emission from the FCC regenerator. The third approach alternative involved the selection and specification of the most feasible regenerator flue gas desulfurization system. The systems considered in this alternative were applied as add-on systems to existing fluid catalytic cracking units. The three approach alternatives are discussed in Sections 4, 5, and 6, respectively.

A rank ordering of the processing techniques considered has been established, and the most applicable technique for refinery catalytic cracker regenerator SO_x control considering the last two approach alternatives has been selected. Technical evaluation of the first approach alternative, feedstock desulfurization, was beyond the scope of this project, but it was evaluated to provide a basis for economic comparison with the other two alternatives. An experimental work plan for the second phase of the study to fully investigate the most applicable technique and to supply sufficient data for a pilot plant study has been submitted to EPA in a separate document.

2. SUMMARY

Conceptual techniques applicable to fluid catalytic cracker regenerator off-gas sulfur oxide emission reduction have been evaluated with respect to their application to (1) the fluid catalytic cracking (FCC) system itself and (2) the regenerator off-gas. These two techniques of control have also been compared with fluid catalytic cracker feedstock desulfurization. The economics for all systems evaluated are compared in Table 1.

A comprehensive analysis of FCC operations has produced evidence that sulfur emission control can be most effectively achieved through steam contacting of the spent cracking catalyst. This concept is therefore proposed as the primary subject for further investigation in Phase II of this program.

Table 1. CAPITAL AND OPERATING COST SUMMARY FOR SYSTEMS TO CONTROL SO_x EMISSIONS FROM REFINERY CATALYTIC CRACKER REGENERATOR

Final Position in Rank Ordering	FCC UNIT CAPACITY, BPSD Desulfurization Technique		10,000 Capital Investment Cost $ x 10^{-6}	10,000 Operating Cost ¢/bbl	50,000 Capital Investment Cost $ x 10^{-6}	50,000 Operating Cost ¢/bbl	150,000 Capital Investment Cost $ x 10^{-6}	150,000 Operating Cost ¢/bbl
1	Cracking Catalyst Steam Contacting	Typical† Case	0.5	13.8	1.2**	7.6**	2.8	6.0
		Worst † Case	0.7	19.8	2.0**	13.0**	4.5	11.0
2	Westvaco	SO_2 Production	1.0	11.9	2.8	6.1	5.8	4.6
		S Production	1.2	13.2	3.4	7 4	7.1	6.0
2	Shell		1.6	14.7	4.6	8.8	9.5	6.8
3	Wellman-Lord		1.7-2.2	22.9	4.9-6.2	9.3	10-12.5	6.1
NR	FCC Feed Desulfurization	Case A††	5.0	95	14.5	53	30.4	47
		Case B††	5.0	71	14.5	39	30.4	33
*	Union Carbide		2.4	23.1	7.5	14.6	16.3	11.8
*	Magnesium Oxide		1.7-1.9	23.8	4.8-5.4	10.9	9.8-11.0	7.6
*	CAT-OX		2.1-2.8	25.9	6.0-8.0	12.1	12.5-16.8	8.4

* Processes with Lower Rating

** For 45,000 BPSD Capacity

NR Not Rated

† Typical and Worst Cases are Defined on Page 66

†† Case A wt % S in/out 3.36/0.243

Case B 3.36/2.43

Cases A and B are Defined on Pages 28, 32,& 33

3. THE FLUID CATALYTIC CRACKING PROCESS

3.1 PROCESS DESCRIPTION

3.1.1 Principal Operations

A fluid catalytic cracking (FCC) plant is composed of three sections: cracking, regeneration, and fractionation. The cracking reactions take place continuously in the reactor, with the spent catalyst being continuously regenerated and returned to the reactor. Both the reactor and the regenerator operate on the fluidization principle, which makes possible the continuity of flow of catalyst as well as of hydrocarbon feed. The negative features of fixed-bed designs involving the intermittent shifting of reactors through cracking, purging, and regeneration cycles are thus eliminated.

In a typical plant, such as that presented in Figure 1, regenerated catalyst is withdrawn from the regenerator and flows by gravity down a standpipe. There a sufficiently high pressure head is built up to allow catalyst injection into the liquid oil stream. The resulting mixture of oil and catalyst flows through a riser (transfer line) where essentially all of the cracking reactions take place. The vapor stream flows into the reaction vessel (used primarily for catalyst disengagement). In this vessel gas velocity is intentionally low so that a high concentration of catalyst will result. The cracked product oil vapors are withdrawn from the top of the reactor after passing through cyclone separators to free them of any entrained catalyst particles.

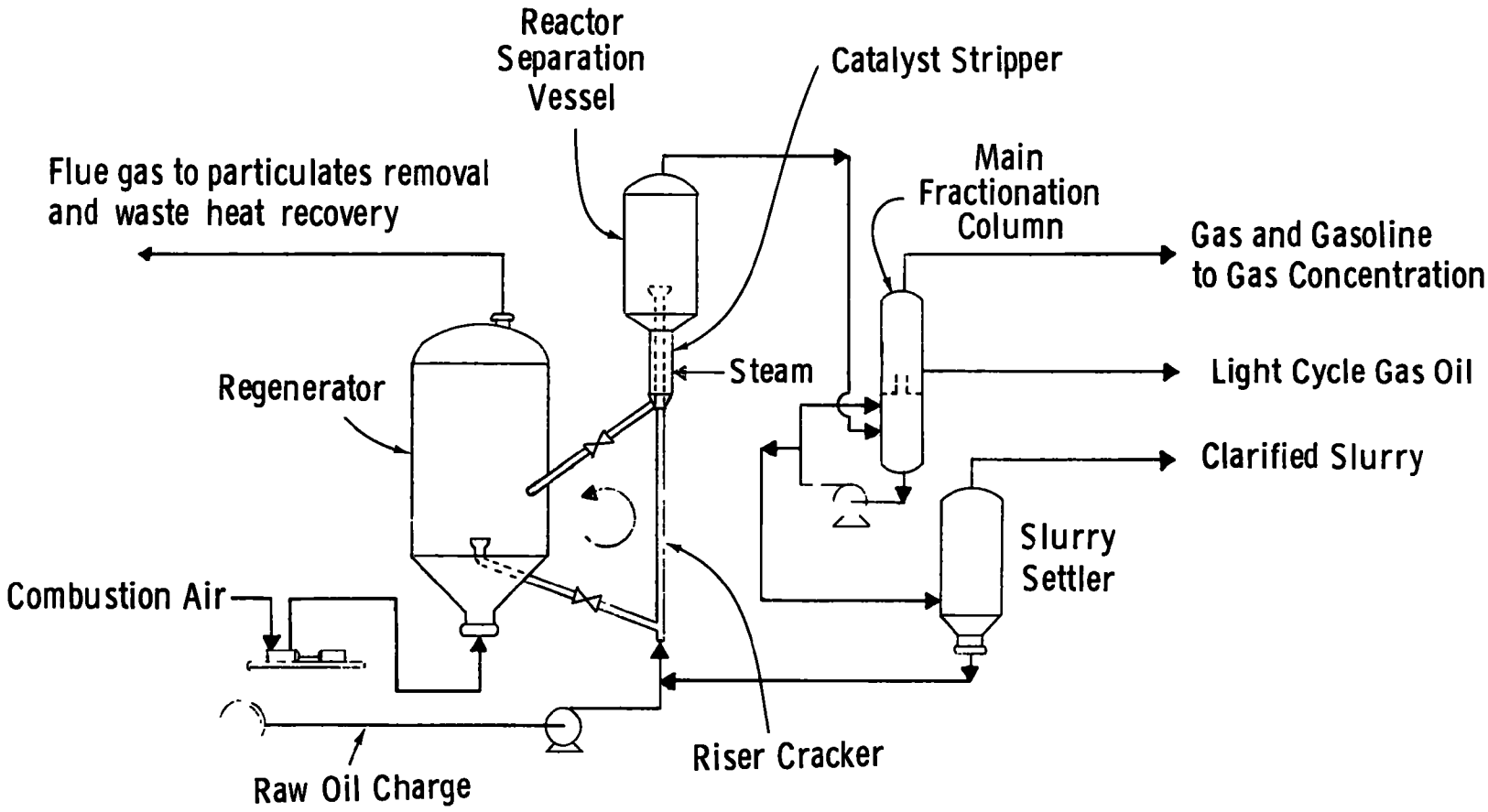

Figure 1. Fluid Catalytic Cracking Unit

The cracking of hydrocarbons that takes place during their contact with the catalyst results in coke deposition on the catalyst. The catalyst must therefore be periodically regenerated. The spent catalyst is withdrawn from the reactor and passed through a steam stripper where residual product vapors are desorbed from the catalyst. After stripping, the catalyst passes to the regenerator where the coke deposits are oxidized by air and burned off. The products of combustion leave the top of the regenerator and pass through a series of cyclones. Here, the bulk of the entrained catalyst is recovered. The regenerated catalyst is withdrawn from the bottom of the vessel to complete the cycle.

The regenerator off-gas is normally sent to an electrostatic precipitator for removal of catalyst fines. The gases (1000-12000°F),* containing a high concentration of carbon monoxide, can be sent to a CO boiler where CO is further oxidized. The CO boiler is located either upstream or downstream of the precipitator. Gas leaving the boiler or precipitator (375-800°F) is then discharged to the atmosphere. This gas is the source of air pollution. The gas composition is presented in Section 3.4.

The product vapors leaving the FCC reactor are sent to a fractionation tower where the first separation of products (gas, gasoline, and cycle gas oil) takes place. These streams are further separated in accordance with the refinery needs and products. FCC operating conditions are presented in Table 2.

FCC technology can be applied to the formation of various products from distillate oils although its major goal for many years was to convert fuel oil to gasoline. The process is extremely flexible and can be readily carried out on a wide variety of feedstocks and over a wide range of temperatures, conversion levels, and catalysts. These features make the fluid process adaptable to widely different refinery product yield and quality requirements.

---

*See Appendix H for British to SI (metric) conversion factors.

Table 2. FLUID CATALYTIC CRACKING OPERATING RANGES[17,25,35,39]

Reactor	Temperature, °F		885-975
	Pressure, psig		9-20
	Catalyst/Oil Ratio (weight)		4-20
	Gasoline Yield*, %	No Recycle	40-45
		Recycle	Up to 61
	Coke Formation*, %	No Recycle	4-9
		Recycle	12-14
	Dry Gas Formation*, %	No Recycle	7-12
		Recycle	13-15
	Conversion*, %	No Recycle	40-60
		Recycle	60-90
	Volume Hourly Space Velocity		1-3
	Gas Velocity, ft/sec		
		Standpipe	2-7
		Riser	15-40
		Fluid Bed	1-2
		Vapor Line	90-115
	Coke Content of Spent Catalyst, % wt		0.25-2.3
Regenerator	Temperature, °F		1000-1200
	Pressure, psig		1-13
	Catalyst Hold-Up Time, min		10-20
	Gas Velocity, ft/sec		1-2
	Coke Content of Regenerated Catalyst, % wt		0.05-1.0

* For more complete information, see also Reference 17, p. 768, and Reference 46, p. 124

The fluid process is capable of processing almost any petroleum fraction ranging from a naphtha to a reduced crude. Market requirements, however, have made it generally advantageous to process the medium or high boiling gas oil fractions. The products that are formed in catcracking include high octane gasoline, raw materials for alkylate production, petrochemical raw materials, heating oils, diesel oils, liquefied petroleum gases, and aromatics such as benzene, toluene, and xylenes (BTX aromatics).

The location of the catalytic cracking process in a modern refinery is shown in Figure 2.

3.1.2 Cracking Catalyst

With minor exception, all commercial cracking catalysts are based on silica-alumina combinations of one type or another. In general, they can be divided into three classes: (1) the acid-treated natural aluminosilicates; (2) the amorphous synthetic silica-alumina combinations; (3) the crystalline, synthetic silica-alumina combinations. All of them are high temperature acids and their catalytic activity is attributed to this activity. It should be noted that 90% or more of the cracking catalysts currently used fall into class 3.[41]

The earliest cracking catalysts of the silica-alumina type were the acid-treated montmorillonite clays (natural clays). These clays are hydrous aluminosilicates containing some base-exchangeable (zeolite type) ions. During the acid treatment, these zeolite ions as well as about one-half of the aluminum in the aluminosilicate structure are removed. These catalysts were widely used but had two weaknesses. The first of these was that a certain amount of iron in the crystal lattice became active

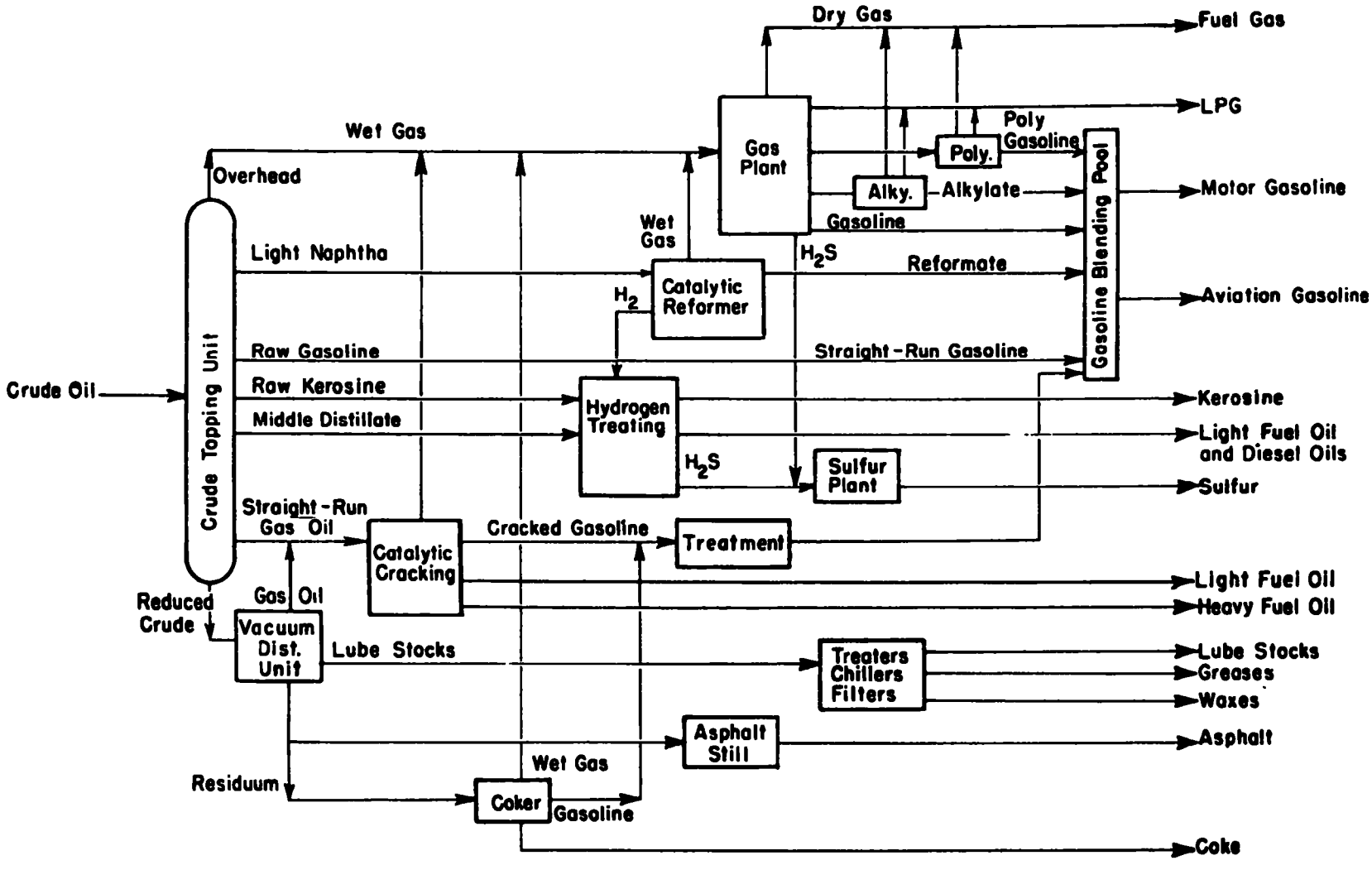

Figure 2. Processing Plan for Complete Modern Refinery

when high sulfur feedstocks were used. The iron catalyzes the formation of coke and hydrogen without contributing to gasoline formation. During catalyst regeneration, it catalyzes combustion of coke to CO_2 rather than to CO, and so liberates unnecessary quantities of heat.

The second weakness was that they were sensitive to high regeneration temperatures and would undergo thermal catalyst deactivation quite easily.

The amorphous silica-alumina (synthetic) combinations were based on combining silica and alumina gels so that the catalysts contained 10-15% Al_2O_3 or 20-30% Al_2O_3, which are defined as "Low" or "High" alumina catalysts, respectively. These catalysts were iron free, so they could be used with high sulfur oils. They were also more thermally stable so they could withstand high regeneration temperatures.

The crystalline, synthetic silica-alumina combinations are manufactured from the natural mineral faujasite and the synthetic Linde X and Y molecular sieves. When the base exchangeable ions are replaced in part by rare earth ions and in part by ammonium ions, an extremely active cracking catalyst is formed.

There are a large number of cracking catalysts. A list of these and their manufacturers has been made by Thomas[41] and is presented in Appendix A.

The amount of catalytic cracking catalyst purchased in the U.S. on a daily basis is about 550 tons/day (based upon 5.5×10^6 bpsd total catcracking capacity and a catalyst attrition of 0.2 lb/bbl feed). Of this amount, Davison Chemical Division of W. R. Grace & Co. supplies the largest quantities (approx. 35%).

American Cyanamid Co. supplies about 30% of total usage. Nalco Chemical Co. and Filtrol Corp. each have an estimated 10% of the catcracking catalyst market.[43,44]

The catalysts used in the FCC process are sold commercially in powdered form. Replacement of catalyst in FCC units is required because of catalyst deactivation by metals (nickel, vanadium, iron) contained in FCC feedstocks and "dusting losses" caused by fragmentation of catalyst particles during handling.

In general a good catalyst should not lose its activity during operation, and the loss by attrition should be small. Natural catalysts are soft and are therefore destroyed more rapidly than most synthetic catalysts. The zeolite catalysts which came onto the market during the last decade tend to be harder than the synthetic catalysts. In some instances, catalyst hardeners have been used to decrease catalyst attrition.

Obviously, the catalyst for the fluid process must exhibit a size distribution that fluidizes properly. For most catalysts, the percentage of up to 80 micron material should be kept above 50% (preferably 75%) and up to 40 micron fraction above 15%. Data on size distribution of catalysts are available in the literature.[17,45,47] An example is shown in Table 3.

3.1.3 Catalyst Stripping and Regeneration

Catalyst stripping is currently used in fluid catalytic cracking both for product recovery and equipment safety. As was already indicated, in the FCC process, large quantities of spent catalyst are continuously circulated back and forth between a conversion zone where the hydrocarbon feed is cracked and a regeneration zone where carbonaceous deposits are burned off the catalyst particles and catalyst is recovered. During the hydrocarbon

Table 3. VARIATIONS OF PARTICLE DISTRIBUTION IN TYPICAL FLUID CRACKING CATALYSTS[17]

Particle Size, Microns	A	B	C	D	E	F	G	H	I	J	K	L
0-10	75	60	0	5	12	1	1	-	-	-	4	6
0-20	95	85	0	15	22	5	3	10	1	13	15	19
0-40	100	95	50	25	41	30	17	25	12	24	33	44
0-80	-	100	100	75	71	75	56	50	48	40	55.8	71
0-125	-	-	-	-	84	93	-	-	71	-	-	-
0-180	-	-	-	100	93	99	95	-	86	-	-	-
0-500	-	-	-	-	100	100	100	100	100	100	-	-

A and B	commercially available, but expensive
C	theoretically desirable, but expensive
D	commercially available at moderate expense
E	average of commercially available at average cost
F	used catalyst, similar to D sample, when new
G, H, and J	samples cited in the literature
I	used catalyst, similar to E, when new (now too coarse)
K	used synthetic
L	used natural

cracking in the reactor, a portion of the feed remains on the catalyst in the form of coke. The composition of the coke has been reported as $(C_3H_4)_n$.[25,42] Additionally, some sulfur originally present in the feed is deposited on the catalyst. Its amount varies with the type of feed, rate of recycle, steam stripping rate, the type of catalyst, cracking temperature, etc.

As indicated by its composition, the coke contains about 10% (by weight) hydrogen. Additionally, the catalyst and the coke are exposed to relatively high concentrations of hydrocarbons in the FCC reactor, which can result in some adsorption of the hydrocarbons on both the catalyst and the coke. Thus, hydrogen content of coke has been reported to range from 4% to 16% by weight,[26] with the most likely value in range of 7-15%.[17]

The amount of hydrogen and carbon that remains on the spent catalyst after it leaves the reactor is very important for safe operation of fluid catcrackers. Essentially all coke forming compounds are removed in the regenerator by air oxidation. The oxidation reactions are highly exothermic and result in a temperature increase in the regenerator. High temperature in the regenerator can be detrimental to the catalyst and also can cause afterburning downstream from the regenerator and result in severe damage of cyclones and auxiliary equipment. The oxidation of coke is carried out under lean conditions (insufficient amount of air for complete combustion) so that not all the carbon is completely oxidized to carbon dioxide. Usually, the CO_2/CO ratio in the regenerator is maintained between 1.0 and 2.0.[17]

The heats of combustion (on a weight basis) for the three oxidation reactions $C \longrightarrow CO$, $C \longrightarrow CO_2$, and $H_2 \longrightarrow H_2O$ are 9743.2 Btu/lb, 14,086.8 Btu/lb, and 51,571.4 Btu/lb, respectively. These values clearly indicate that oxidation of hydrogen produces 5.3 times more heat than oxidation of carbon to carbon monoxide, and 3.7 times more heat than oxidation to carbon dioxide. The amount of

hydrogen leaving the reactor and entering the regenerator is therefore very important to proper operation of the FCC units. Furthermore, since the products that would be burned in the regenerator are quite valuable, it is economically desirable to recover them.

When the FCC process was being developed, it was learned that the use of steam is both an efficient and an economical method of stripping the hydrocarbons off the spent catalyst for their later recovery. Various devices and methods have been employed to remove hydrocarbons from spent fluidized catalyst.

The apparatus which is used to remove entrained hydrocarbon products from the spent catalyst is commonly referred to as the catalyst stripper. In present designs, steam is used as the stripping gas because it can be condensed and easily separated from the reaction products. Other gases, such as nitrogen, fuel gas, or oxygen-free flue gas, have been used as stripping agents.[25] Their use, however, was not desirable because these gases (1) are not condensable in existing refinery facilities and would cause dilution of process streams, and (2) blanketed heat transfer surfaces and decreased the heat transfer efficiency in condensers.

The catalyst strippers that are in use on existing FCC units are typically operated in the following manner. Spent catalyst leaving the reaction zone is passed through a catalyst stripper where stripping medium passes the catalyst counter-currently. The stripping gas and stripped out hydrocarbons are discharged from the stripper either directly into or slightly downstream of FCC reaction zone.

The contacting devices normally used in catalyst stripping are basically counter-current mass transfer units. Figure 3 depicts the physical configuration of such units. The baffles, which appear as having either a herringbone or a chevron configuration, are used as contacting stages in the stripper. Catalyst, which enters the top of the stripper, flows in a zigzag fashion downward by gravity over the baffles. The stripping gas (steam) flows vertically upward through each baffle and around the down-flowing catalyst particles. The baffles act as stripping gas distribution plates because each baffle contains many holes over its surface. Both short circuiting of stripping gas around the baffles and leakage of catalyst through the holes are avoided by proper design of the baffles. Details of each stripper design can be found in any of the patents covering such designs.[48-57,126] Typical design conditions for catalyst strippers are summarized in Table 4.

3.2 TYPES OF FLUID CATALYTIC CRACKING UNITS

There are several types of FCC units that have been developed by various companies and that differ slightly in the design of the major and auxiliary equipment.[15] The operating principles, however, are the same for all of these design types. Table 5 demonstrates the free world market distribution for the six designs presently used. The number of units based on the Esso Research & Engineering Co. design was estimated. The company has designed units presently handling 2×10^6 bpsd or about 25% of the free world capacity.[15] Using an average FCC unit capacity for the United States (Table 6) and applying this average to calculate the number of units that can handle the capacity reported by Esso, we have arrived at a total of 59 units. The same figure represents 25% of 237, the total number of FCC units. Schematic diagrams of FCC designs appear in Figure 4.[66]

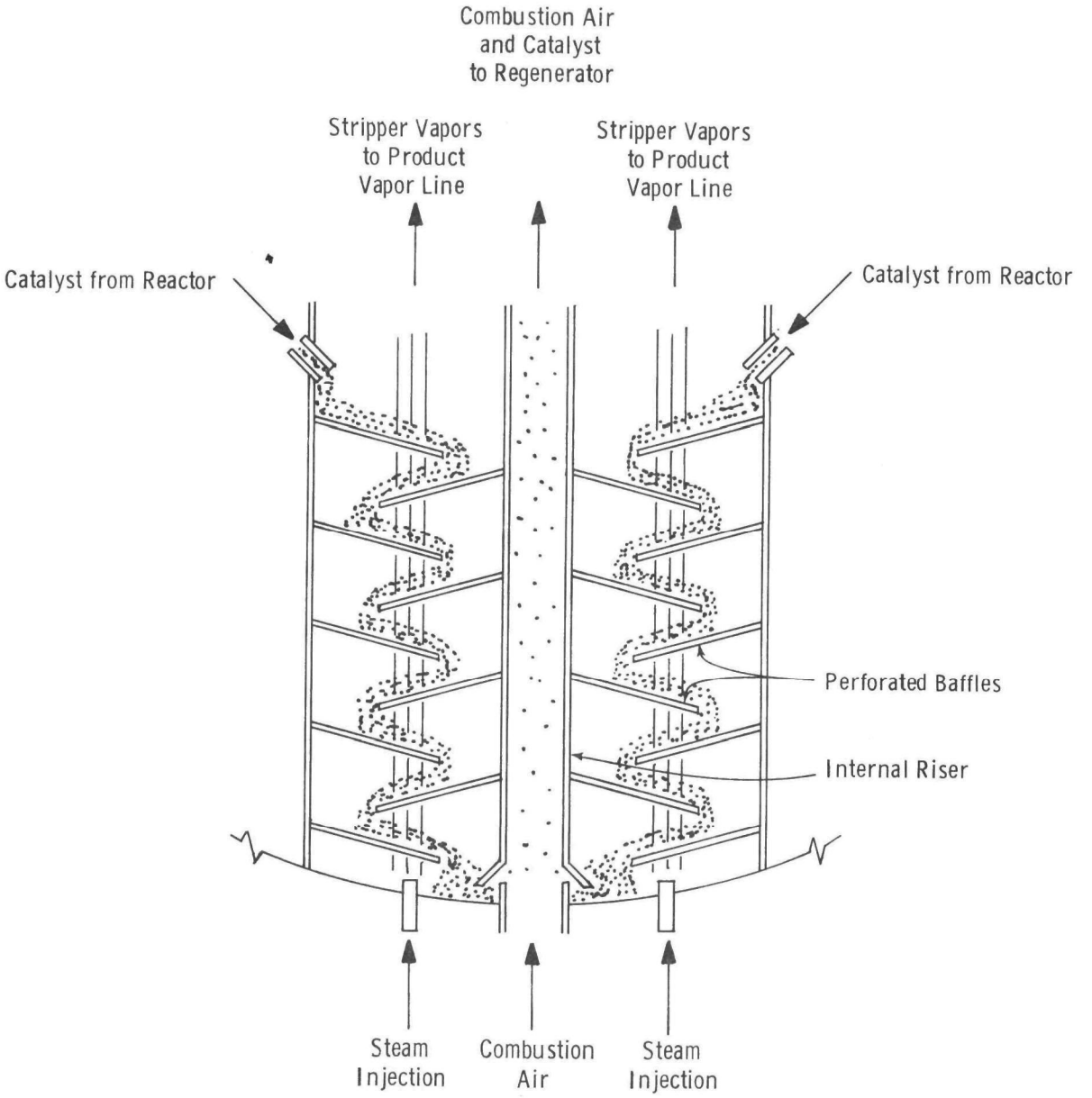

Figure 3. Catalyst Stripper

Table 4. DESIGN CONDITIONS OF CATALYST STRIPPERS[49,55,58]

Temperature, °F	900-1000
Pressure, psig	5-20
Steam Stripping Rate, lb/1000 lb of catalyst	1.8-9
Catalyst Flow, lb/sq ft/min	200-5000
Superficial Gas Velocity, ft/sec	0.05-25
Stripper Bed Density, lb/cu ft	15-35

Table 5. USE OF VARIOUS FCC DESIGN TYPES

Design Type (Licensor)	No. of Units	% of Total
Universal Oil Products Co.	125	52.5
Esso Research & Engineering Co.*	(59)	(25)
M.W. Kellogg Co.	31	13.1
Standard Oil Co. (Indiana)	11	4.6
Texaco Development Corp.	6	2.6
Gulf Research & Development Corp.	5	2.2
	237	100.0

* Estimated

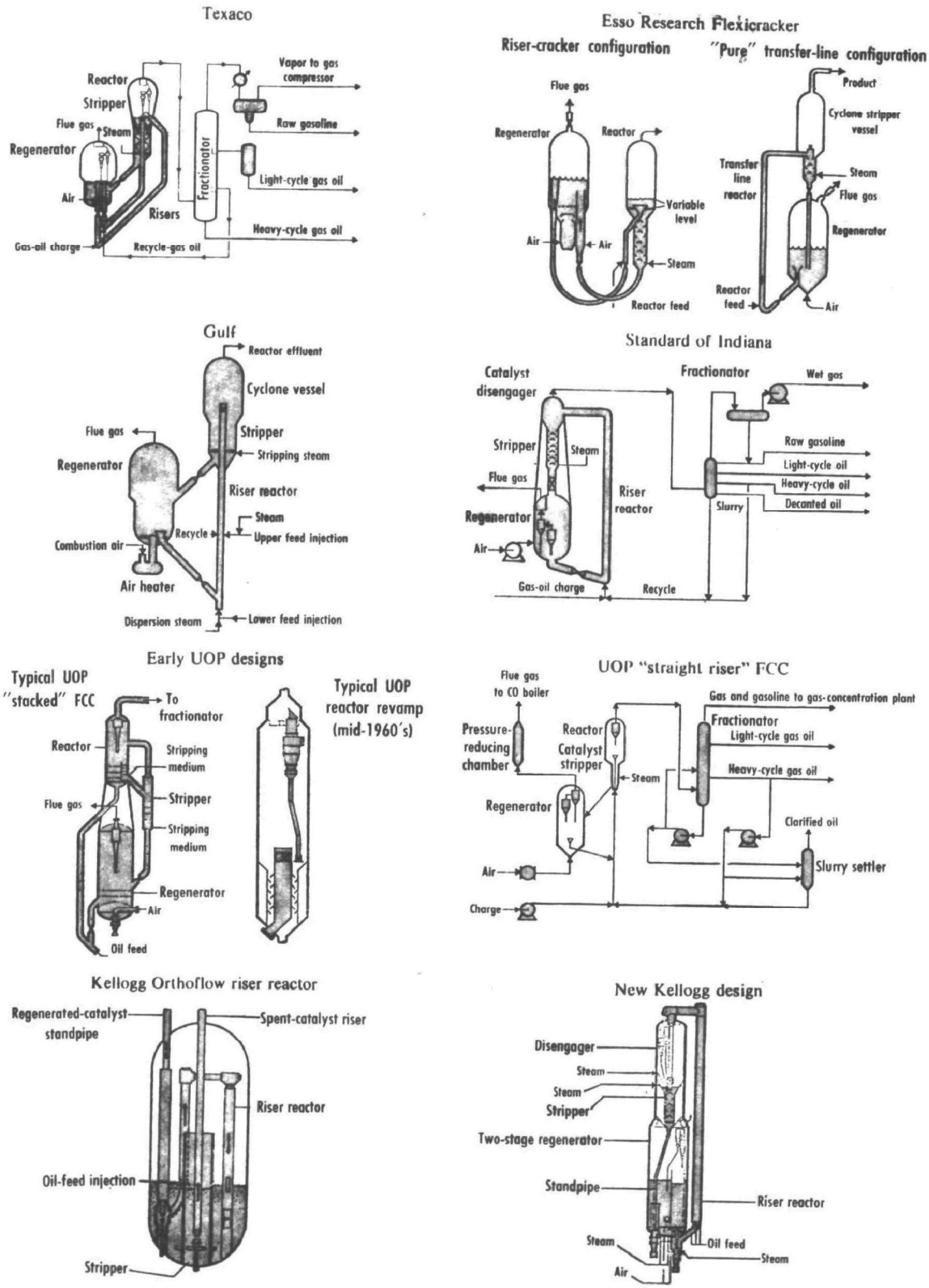

Figure 4. FCC Designs

3.3 SIZE AND CAPACITY OF FLUID CATALYTIC CRACKING UNITS

Another very important factor in the process alternatives evaluation was the size of the FCC unit for which the evaluation would be made. As of January 1, 1973, there were 246 refineries in the U.S. on stream.[9] Of these, 119 contained FCC units. Table 6 lists United States refineries according to their production capacity, in the intervals of 5,000 barrels per stream day (bpsd), excluding refineries larger than 100,000 bpsd. The latter were broken into two groups, (1) from 100,000 to 150,000 bpsd and (2) larger than 150,000 bpsd. Presently, the largest refinery in the U.S. is Exxon's 434,000 bpsd refinery in Baton Rouge, Louisiana.

Table 6 also includes the number and percentage of units that contain fluid or other catalytic cracking processes and the cumulative percent values for both refining and fluid cracking capacities. As shown in Table 6, practically any refinery larger than 5,000 bpsd can operate an FCC unit. The refineries larger than 30,000 bpsd will almost surely contain some catalytic cracking operation, with an 85% chance that it will be of the fluid type (from the total of 140 cat-cracking units, 119 are fluid). The fresh-feed FCC unit capacity on an average is about 33% of the refinery total capacity in barrels per stream day (bpsd).

The total number of U.S. refineries in 1940 was 461, with a total capacity of about 4.2 million bpsd.[10] As has already been mentioned, in 1973 the total number of refineries in the U.S. has been reduced to 246 but these have a total producing capacity of almost 14 million bpsd. Recently, a million barrels per day of new capacity within the United States has been announced, with the smallest unit having a capacity of 150,000 barrels per day.[11,12] These facts certainly indicate that the general trend in the petroleum industry is towards larger and larger capacity, and these larger refineries obviously contain FCC units. It can

Table 6 SUMMARY OF REFINING AND CATALYTIC CRACKING UNITS IN THE UNITED STATES AS OF JANUARY 1, 1973[9]

Refinery Size BPSD	Number of Refineries in Range	Refining Capacity BPSD	% of Total Capacity (Cumulative)	Number of Refineries in Range with FCC Facilities	FCC Capacity Fresh BPSD	FCC Capacity Total BPSD	% Units Having FCC Facilities	Number of Refineries in Range With TCC Facilities	% Units Having CC Facilities	% of Total FC Capacity (Cumulative)
1 - 5,000	45	128,280	92	0	0	0	0	0	0	0
5,000-10,000	34	245,900	2 67	3	7,300	12,400	8 82	0	8 82	0 26
10,000-15,000	15	188,400	4 02	4	17,700	25,300	26 67	1	33 33	0 80
15,000-20,000	18	324,100	6 33	6	42,000	53,400	33 33	3	50 00	1 93
20,000-25,000	8	188,800	7 68	5	42,000	48,850	62 50	1	75 00	2 96
25,000-30,000	18	512,800	11 35	8	81,700	93,400	44 44	6	77 78	4 94
30,000-35,000	3	101,600	12 07	3	34,500	53,270	100 00	0	100 00	6 06
35,000-40,000	9	335,900	14 47	7	90,100	102,250	77 78	0	77 78	8 23
40,000-45,000	2	87,500	15 10	1	18,000	27,000	50 00	1	100 00	8 80
45,000-50,000	9	441,500	18 25	8	150,000	209,100	88 89	1	100 00	13 22
50,000-55,000	8	417,200	21 23	6	100,000	112,100	75 00	2	100 00	15 59
55,000-60,000	4	233,600	22 90	3	61,700	68,740	75 00	0	75 00	17 05
60,000-65,000	6	374,000	25 57	5	92,000	100,000	83 33	1	100 00	19 16
65,000-70,000	4	274,700	27 54	3	73,000	103,000	75 00	1	100 00	21 34
70,000-75,000	2	147,000	28 59	2	56,000	72,000	100 00	0	100 00	22 87
75,000-80,000	2	160,000	29 73	1	30,000	30,000	50 00	1	100 00	23 50
80,000-85,000	3	251,000	31 52	2	38,500	39,000	66 67	1	100 00	24 33
85,000-90,000	6	536,700	35 36	6	184,000	227,900	100 00	0	100 00	29 15
90,000-95,000	1	95,000	36 04	1	46,000	55,300	100 00	0	100 00	30 32
95,000-100,000	8	787,400	41 66	6	224,400	261,400	75 00	0	75 00	35 95
100,000-150,000	17	2,069,700	56 45	15	620,400	757,500	88 24	1 (1)*	100 00	51 88
150,000 And Larger	24	6,096,100	100 00	24	1,979,300	2,274,500	100 00	0	100 00	100 00
Total	246	13,997,180	-	119	3,989,100	4,726,410	-	21	-	-

* Houdriflow Unit

Note In the source from which this information has been acquired[9] refining capacities in bpsd were not reported for some refineries, and were consequently estimated This has resulted in a slight difference in the total refining capacity from that reported in the source Also, only 17 refineries were listed for the state of Louisiana, which is in disagreement with the total of 18 refineries counted by the source This resulted in the total shown of 246 refineries instead of 247

also be reasonably assumed that the smaller capacity units will be phasing out. Furthermore, it is apparent from Table 6 that the refineries in the capacity range from 0 to 30,000 bpsd are responsible for only 11.35% of total United States production capacity, and less than 5% of the total FCC capacity.

Based on these facts we have chosen the range of FCC capacities between 10,000 and 150,000 bpsd for economic evaluation of the desulfurization systems for the fluid catalytic cracking operation. Specifically, our cost estimates were prepared for three capacities: 10,000, 50,000, and 150,000 bpsd of cracked stream. The data obtained for these capacities have been plotted to obtain the figures for intermediate sizes.

3.4 EMISSIONS FROM FCC UNITS

3.4.1 General

Atmospheric emissions from catalytic cracking operations have been established by several investigators. The first relatively complete study of emissions from the refineries was conducted in the years of 1955 through 1958 in Los Angeles County, California.[1-3]

A candid effort by the Environmental Protection Agency to establish emission standards for different groups of industries has recently revived interest in petroleum refinery emissions, specifically, in the emissions discharged to the atmosphere from fluid catalytic cracking (FCC) operations.[4-7] Nationwide emission trends have also been established.[8] A summary of data obtained from these sources is presented in Table 7.

These studies were also very helpful in establishing and defining the operations in petroleum refineries that are mostly responsible

Table 7. EMISSION RANGES FROM FLUID CATALYTIC CRACKING UNIT REGENERATOR, BEFORE AND AFTER CO BOILER

Fresh Feed Rate, bpsd 156,000

Recycle Feed Rate, bpsd 35,000

	Before CO Boiler	After CO Boiler*
Stack Discharge Rate, scfm (60°F, 1 atm, dry basis)	484,000	Up to 30% Volume Increase (On Wet Basis)
Temperature, °F	1000-1200	485-820
Emissions:		
Sulfur Dioxide, ppm**	140-3300	Up to 2700†
Nitrogen Oxides (as NO_2) ppm	8-394	Up to 500 †
Carbon Monoxide, % vol.	7.2-12.0	0-14 ppm
Carbon Dioxide, % vol.	10.5-11.3	11.2-14.0
Oxygen, % vol.	0.2-2.4	2.0-6.4
Moisture, % vol.	13.9 - 26.3	13.4-23.9
Nitrogen, % vol.	78.5-80.3	82.0-84.2
Hydrocarbons, ppm	98-1213	-
Ammonia, ppm	0-675	-
Aldehydes, ppm	3-130	-
Cyanides, ppm	0.19-0.94	-
Particulates, grains/scf	0.08-1.39	0.017-1.03

* Emissions after CO boiler will be affected by the type of supplemental fuel and operating conditions in the CO boiler

** It was reported that up to 60% of sulfur oxides in regenerator flue gas may appear as SO_3 (see page 85)

† Estimated

for atmospheric pollution. However, they have also indicated that the air pollution problem of the petroleum industry is very complex and varies from refinery to refinery. Specifically, the type of raw crude oil processed in the refinery as well as the types of unit operations that a specific refinery utilizes to produce its final products have a significant effect on the severity, amounts, and concentrations of atmospheric emissions. Consequently, a need to define the air pollution problem for each refinery in the United States individually and individual approaches to a refinery air pollution abatement was strongly felt throughout the whole study.

3.4.2 Basis for Comparison

The complete technical and economic comparison of the individual approach alternatives as well as the individual systems included in these alternatives could be made only if an equal and uniform basis for this comparison were well defined. Consequently, we have established a "typical" FCC operation based on the sulfur material balance. This "typical" FCC unit may not correspond exactly to or represent any actual refinery in the United States but was defined as accurately as possible to represent the present and future conditions. As such it was used as the basis for systems comparison, technical as well as economic, for all three approach alternatives evaluated.

The flue gas desulfurization processes developed primarily for power generation sources (in our study defined as add-on systems) were considered applicable for FCC flue gas desulfurization and were to become a significant part of the study. Applying operating conditions and economic assumptions similar to those applied to power plant flue gas desulfurization processes to the case of refineries would simplify our task without major

applicability restrictions and would result in much more effective conclusions. The majority of flue gas desulfurization systems have been studied within the range of sulfur dioxide concentrations of 2,000 to 2,500 ppm with removal efficiencies ranging from 90 to 95%. All the economic evaluations for these systems presently available are based on similar assumptions. Consequently, we have applied similar assumptions (2000 ppm SO_2 in regenerator flue gas and 90% removal) to composition and removal efficiencies of sulfur dioxide from FCC regenerator flue gas. Table 7, which summarizes the operating conditions and emission ranges of the FCC units in the U.S., shows that this assumption is well within the range existing in refineries. The sulfur dioxide emission level from most U.S. refineries is below the 2000 ppm level.[67] However, worldwide demand for petrochemical products indicates that high sulfur crudes will need to be processed in the future creating the potential for increased sulfur levels in refinery atmospheric emissions. Also, the size of the add-on systems applied to desulfurization of regenerator flue gas is a function of the gas volume handled by the process and will not change drastically with sulfur concentrations. (See also Section 6.3.) The effect of sulfur concentrations on operating cost can be considered negligible since sulfur credit was excluded from our cost analysis.

3.4.3 Predicting SO_2 Emission

As has already been indicated, some sulfur, whether in the form of sulfur-containing hydrocarbons or as hydrogen sulfide, is carried with the catalyst into the regenerator. Here, the sulfur compounds, along with carbon and hydrogen, are oxidized and leave the regenerator in the form of sulfur oxides. The oxidation reactions in the regenerator are carried out in an oxygen-lean atmosphere. The conditions of oxidation are very carefully controlled. Consequently, the sulfur dioxide concentration in the

gases leaving the regenerator will be a function of the amount of sulfur present on the catalyst to be regenerated and amount of air used for regeneration. Since the amount of air required for catalyst regeneration (or coke combustion) is proportional to amounts of individual elements (carbon, hydrogen, sulfur) carried by the spent catalyst, and since the degree and amount of oxidized carbon can be represented by the CO_2/CO ratio in the off-gas leaving the regenerator, the following equation was developed that enables prediction of SO_2 concentration in the regenerator off-gas as a function of hydrogen and sulfur content of coke and CO_2/CO ratio.

$$SO_2(\text{vppm}) = \frac{S \times 10^6}{2.667 + 5.015\left(\frac{2R+1}{R+1}\right)(1-S-H) + 27.429H + 2.095\,S} \quad (1)$$

where

SO_2 concentration in volume parts per million (vppm) is calculated on the dry basis

S = weight fraction of sulfur in coke

H = weight fraction of hydrogen in coke

R = mole ratio of CO_2 to CO in regenerator off-gas

The full derivation of this equation and necessary assumptions are supplied in Appendix B.

Based upon the above equation, the weight fraction of sulfur in coke before combustion, S, would have to be 0.00243 in order to obtain a concentration of 200 ppm SO_2 in the regenerator off-gas with R = 1 and H = 0.1. This can also be determined from the diagram in Figure 5, which was calculated using Equation 1. As it can be seen from Figure 5, sulfur concentration as a function of sulfur content of coke is practically linear within the sulfur-on-coke concentration range of 0-3% wt.

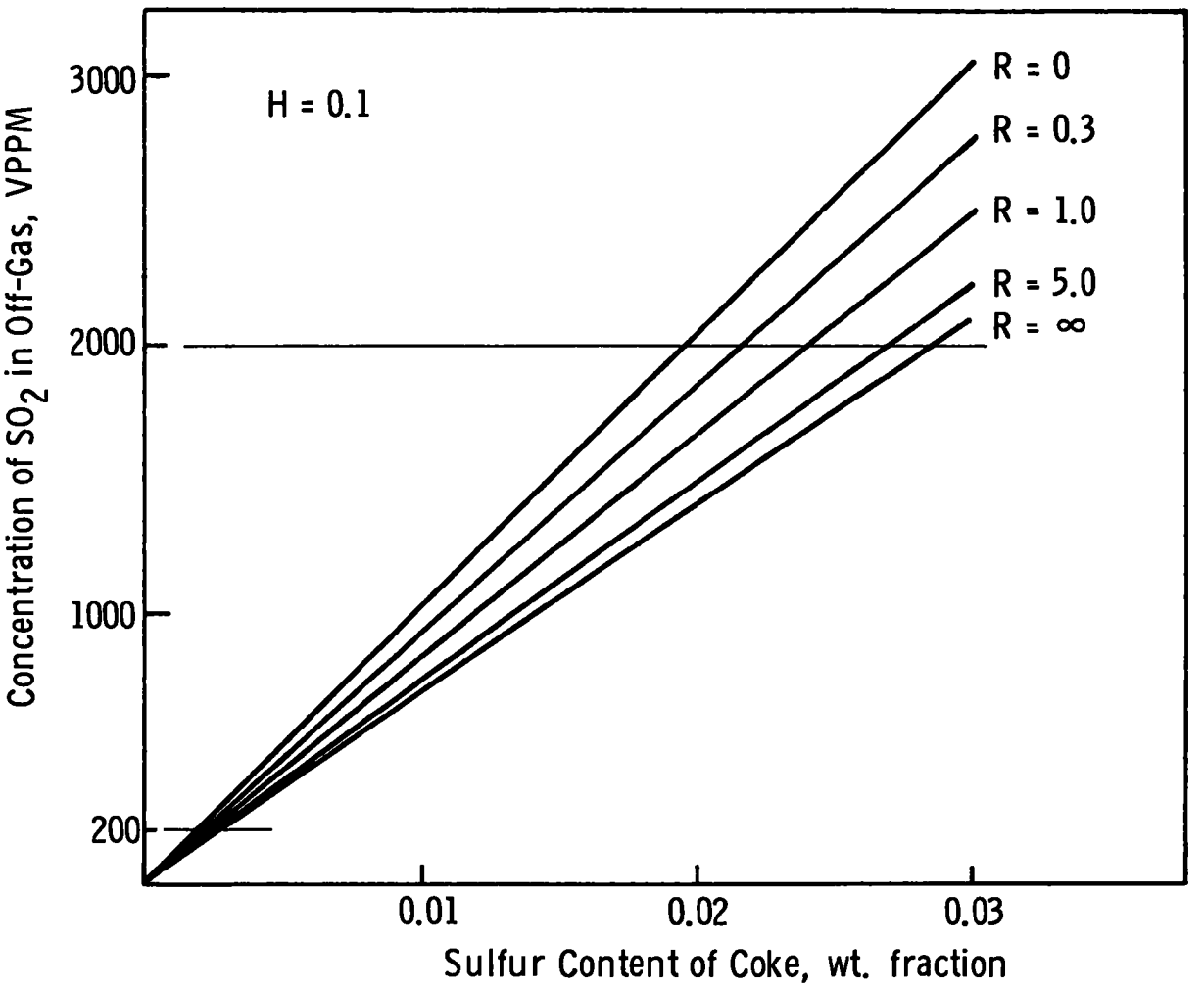

Figure 5. SO_2 Concentration in FCC Regenerator Off-Gas

This equation is also very useful in defining the degree of FCC feedstock desulfurization that would be equivalent to levels of regenerator off-gas sulfur emissions of 2000 ppm and 200 ppm. The sulfur content of coke (weight fraction) that would result in 200 ppm sulfur emission was already shown to be 0.00243, or 0.243 wt %. Similarly, the sulfur content of coke that will produce 2000 ppm SO_2 in the regenerator off-gas was determined to be 2.43 wt %. The ratio of wt % sulfur on coke to wt % sulfur in the FCC feed ranges from about 0.7 to 1.2[27,29,33,35,61] depending on FCC operating conditions (primarily sulfur content of the feed, type of catalyst, steam stripping rate, catalyst-to-oil ratio, oil recycle, feed hydrodesulfurization, etc). Applying this ratio one can convert the sulfur content in coke to sulfur content in the feed or vice versa. In our definition of the degree of FCC feedstock desulfurization (Section 4) which would be equivalent to emissions of 2000 ppm and 200 ppm, we have therefore assumed the sulfur content of feedstock (or the degree to which the feedstock must be desulfurized) to be 2.43 wt % and 0.243 wt %. The figures are equal to sulfur contents in the coke since the ratio of wt % sulfur in coke to wt % sulfur in the FCC feed was assumed to be 1.

3.5 SUMMARY OF ASSUMPTIONS

Two types of assumptions, technical and economic, had to be made in order to assure the comparison of all of the processes on the same basis. The assumptions were made to agree as accurately as possible with the conditions presently existing in refineries and were used throughout this whole study. The foundation for and discussion of the assumptions were presented in previous sections. When additional assumptions relative to a specific application were necessary, those are introduced and defined in the appropriate sections of this report.

3.5.1 Technical Assumptions

The majority of the technical assumptions define the operating conditions and sulfur balance around the fluid catalytic cracker. These are:

- The regenerator off-gas temperature is 1000°F.
- The regenerator off-gas sulfur dioxide concentration is 2000 ppm.
- A reducing atmosphere exists in the regenerator off-gas.
- Regenerator off-gas is diluted by 27% in passing through the CO boiler.
- An oxidizing atmosphere exists in the CO boiler flue gas.
- The CO boiler flue gas temperature is 500°F.
- No sulfur oxides are added to the flue gas from the supplemental fuel used in the CO boiler.
- The sulfur dioxide concentration in the gases emitted to the atmosphere is 200 ppm.

3.5.2 Economic Assumptions

The following general economic assumptions were used in the study, several of which are expressed as percentages of fixed capital investment (F.C.I.):

A. FCC Unit Size: 10,000, 50,000 and 150,000 bbl feed capacity

B. Capital Investment

1. Start-up cost - 10% F.C.I.
2. Working capital - 10.5% F.C.I.
3. Interest on construction loan - construction period of 12 months; financed fixed capital at the rate of 8%/yr for average of half of construction period assumed
4. Does not include sulfur recovery plant capital cost
5. Base period - February 1973
6. Scaling factor - 0.67
7. CE plant cost index

1968	113.7
1969	119.0
1970	125.7
1971	132.3
1972	137.2
Feb. 1973	140.4

C. Operating Cost

1. Labor - $5.50/manhour
2. Maintenance labor - 2% F.C.I.
3. Maintenance materials - 2% F.C.I.
4. Control laboratory labor - 20% of operating labor
5. Process water - 30¢/1000 gal
6. Operating material - 10% operating labor
7. Cooling water - 2¢/1000 gal
8. Electricity - 1¢/kwh
9. Fuel - 34¢/million Btu

10. Hydrogen cost - 40¢/1000 scf

11. Plant overhead - 80% total labor

12. Taxes & insurance - 2% F.C.I.

13. G&A, sales, research - 6% F.C.I.

14. Depreciation - 10% F.C.I.

15. Interest on working capital - 6% working capital

16. Return on investment - 20%

17. Value of steam - 50¢/10^6 Btu

18. Stream factor - 0.9

19. No credit for sulfur by-products was included in the cost estimates

20. No correction was made for by-product handling facilities (except for process modification alternative)

21. No correction was made to account for system retrofit expenses

22. Necessary off-site facilities (such as Claus unit) are available

23. Sulfur recovery plant costs - $16/long ton sulfur produced
    (a) direct operating costs $8/long ton
    (b) indirect operating costs - $8/long ton, H_2S is available

4. FCC FEED DESULFURIZATION

Desulfurization of the feed was the first approach alternative considered for reduction of the sulfur emissions from FCC operations. Desulfurization technology is very well known to petroleum refiners and can be applied to almost any petroleum stock. A large research effort has been directed towards developing this technology, and a large number of desulfurization processes applicable to various feedstocks, to desulfurize to different degrees, and of different designs have been developed

4.1 TECHNICAL EVALUATION

In our study we considered the desulfurization of the feed to the cat cracker as one of the alternatives to reduce the sulfur emissions in FCC regenerator flue gas. During the study it appeared that in order to correctly evaluate desulfurization of the feed to the FCC process, the refinery should not be penalized for the total cost of the desulfurization, but only for the part of the desulfurization cost that would result in additional reduction of sulfur emissions. If the refinery is willing to desulfurize this feed to a certain degree for whatever reason, whether to optimize its operation or produce products of needed quality, but disregarding the sulfur emission in regenerator flue gas, this cost should not be used for comparison with the other two approach alternatives. Generally, the sulfur concentrations of the original gas oils can vary from 0.51 to 3.36 wt % of sulfur.[24]

Our theoretical system has been defined in two cases. Case A will desulfurize the FCC feed from a maximum gas oil sulfur concentration of 3.36% to 0.243% to obtain 200 ppm sulfur emissions

in regenerator flue gas. Case B will desulfurize the feed from 3.36% to 2.43% sulfur in the feed, which corresponds to 2000 ppm. The cost difference between Cases A and B thus becomes a measure of cost needed to desulfurize the FCC feed from 2.43% to 0.243% equivalent to regenerator flue gas SO_2 concentrations of 2000 ppm and 200 ppm, respectively.

The results of such analysis would obviously render a comparison value even if desulfurization operating conditions of a specific refinery are considered. For example, if a refinery is desulfurizing to a level lower than 2.43%, the sulfur emissions in the regenerator flue gas will be lower than 2000 ppm. The expenditure that a refinery has to make to improve its desulfurization unit to reduce sulfur emissions to 200 ppm will then be within the range of figures represented by the cost difference of the two cases. It should be noted however, that the cost of an add-on system as it appears in this report will remain basically unchanged despite the degree of feed desulfurization because essentially the same volume of flue gas will have to be handled by this unit.

A modern petroleum refinery is a highly complex operation. In addition, each refinery operates on its own typical scheme depending on the composition of the crude oil that it is processing, the type and quality of product produced, and many other variables. Consequently, the benefits that can be realized from the desulfurization of some of the feedstocks will be primarily a function of the operations that a specific refinery utilizes to produce its products. The "real" desulfurization costs should be obtained from the optimization of the whole refinery operation. The basic cost estimates presented in this report have been prepared for the desulfurization of the feed to the catalytic cracking unit without considering any benefits of this desulfurization on

improved conversion efficiencies and reduced operating costs of the fluid catalytic cracking unit.

This economic evaluation of feedstock desulfurization appeared to be necessary in order to be able to compare the economics of all three of our approach alternatives, namely, process modification, desulfurization of feed, and add-on flue gas desulfurization systems.

Presently, very few desulfurization units are used in the U.S. The feed to catalytic cracking units is only 5.3% of the total desulfurization capacity (see Appendix C). When the new air pollution regulations are enforced and applied fully and the new energy supply basis is established, it can be expected that a significant change will occur in petroleum refining, specifically, desulfurization of some feedstocks. For these reasons, to enable application of desulfurization technology to air pollution abatement, and to understand its present application as well as future potential, we have included in Appendix C a brief discussion of present desulfurization techniques and air pollution regulations that will affect the scope to which this technology may be applied.

4.2 ECONOMIC EVALUATION

The capital and operating costs of FCC feed desulfurization are presented in Figures 6 and 7 and the incremental cost between Cases A and B in Figure 8. A detailed breakdown of the cost is summarized in Appendix D.

Some additional assumptions were made in these economic evaluations in addition to the assumptions summarized in Section 3.5. These are listed on the following page.

Process Conditions

- Reactor pressure, psig — 1000
- Reactor average temperature, °F — 750
- Liquid hourly space velocity, $hour^{-1}$ — 1.0
- H_2/oil ratio, scf/bbl — 4000
- Hydrogen consumption, scf/lb of sulfur removed — 48
- Boiling range of feed, °F — 600-1020

	Case A	Case B
• Sulfur in feed (% wt)	3.36	3.36
• Sulfur in product (% wt)	0.243	2.43

- Fixed bed type reactor

Capital Investment Cost

- The cost does not include a hydrogen plant
- General service facilities - 15% of total process and utilities cost

Operating Cost

- 2 operators per shift
- Catalyst cost, $1.05/lb
- Treatment loss, $0.178/bbl of feed
- Claus unit operating cost, $16.0/long ton of sulfur produced

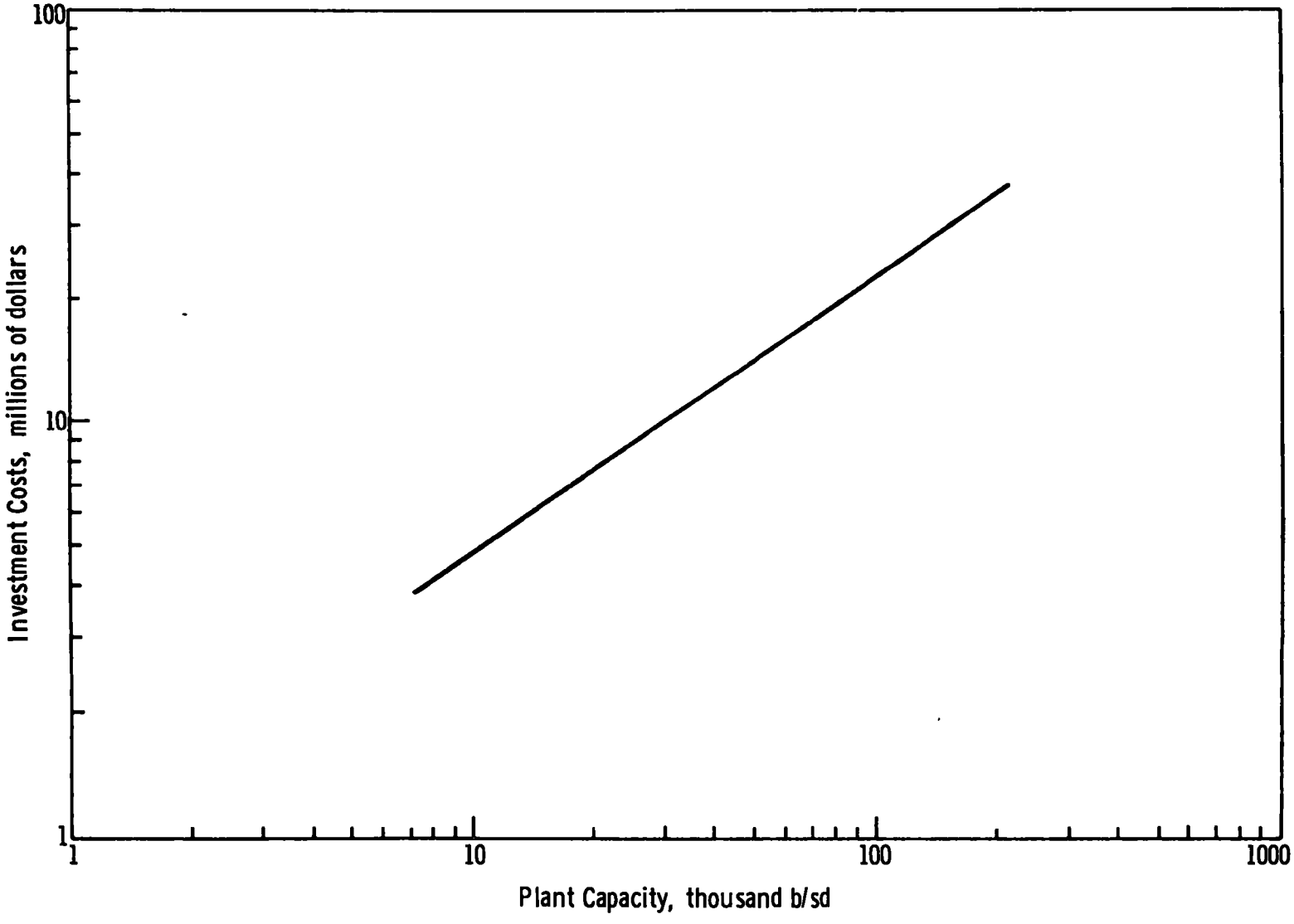

Figure 6. Hydrodesulfurization of FCC Feedstock, Capital Investment Cost (February 1973)

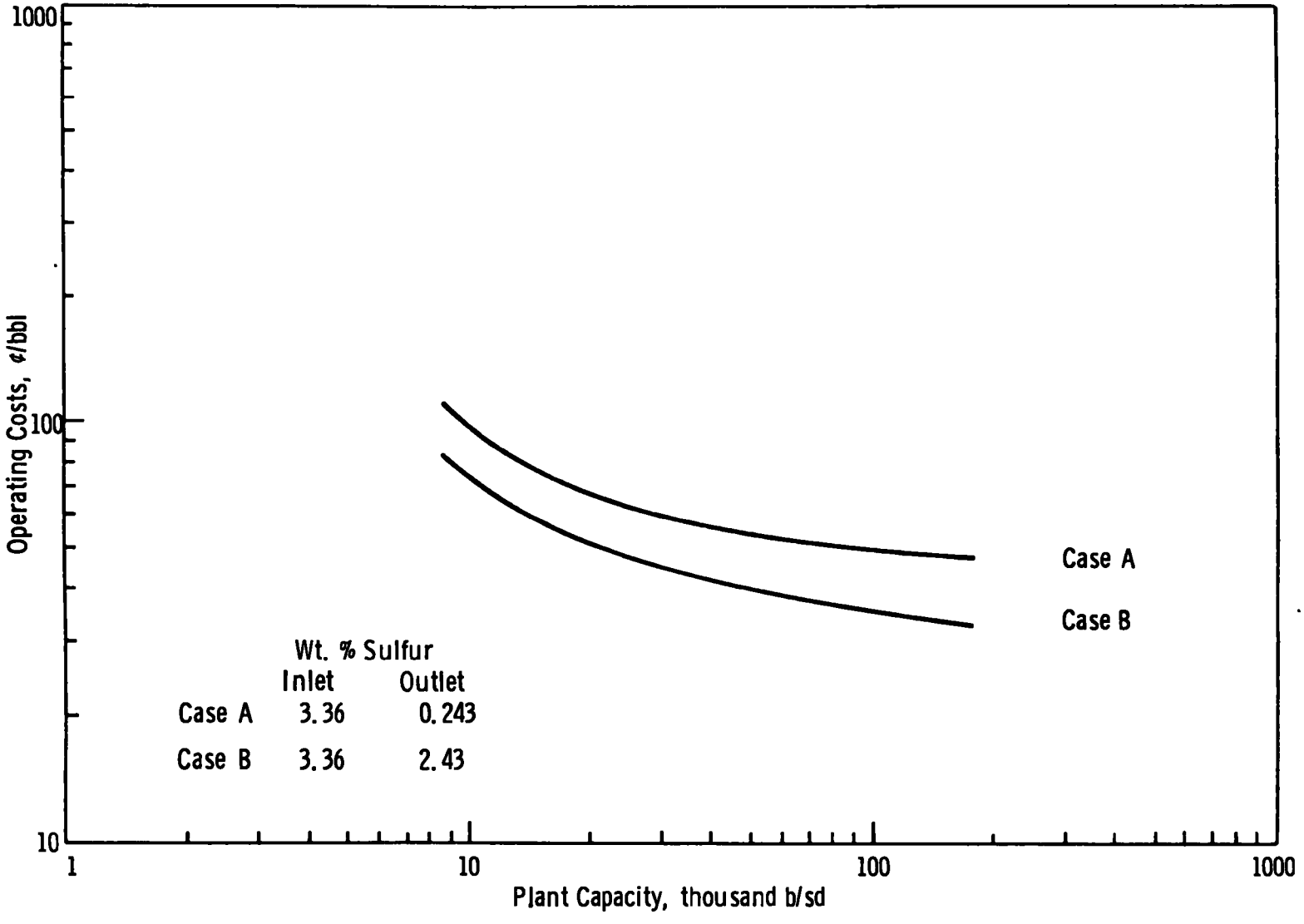

Figure 7. Hydrodesulfurization of FCC Feedstock, Operating Cost

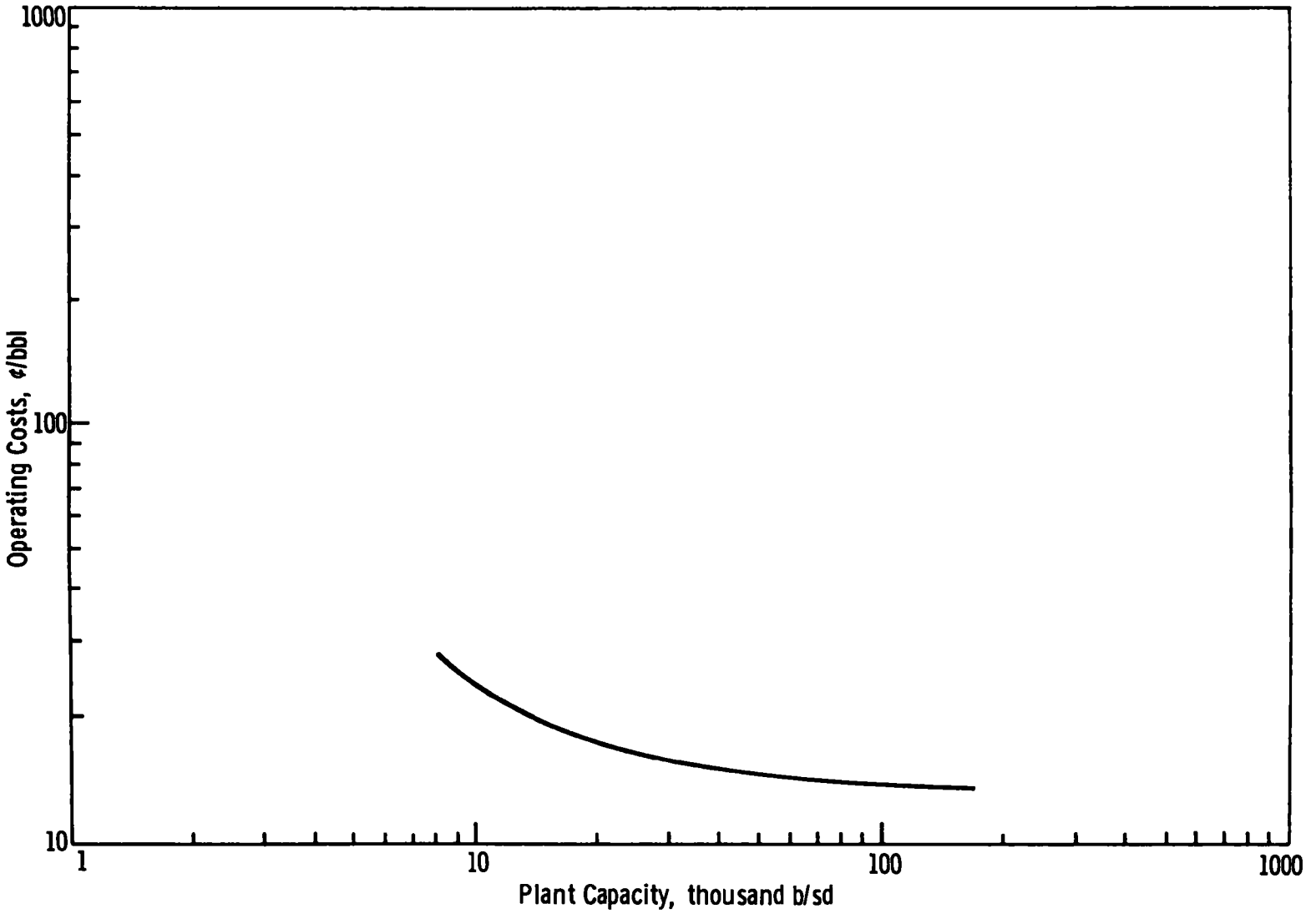

Figure 8. Hydrodesulfurization of FCC Feedstock, Incremental Operating Cost

5. PROCESS MODIFICATION

The second conceptual technique evaluated for reducing petroleum FCC regenerator SO_x emissions was FCC process modification. The purpose of process modification analysis was to determine if a location in the FCC flow train exists that could be easily modified and still be competitive with the other two approaches. Justification for such an analysis was found and also confirmed later in the fact that petroleum refiners primarily concentrate on hydrocarbon production. The sulfur oxides emission reduction from FCC operations was either of no concern or of secondary importance. The conclusions of our analysis are summarized below.

5.1 SUMMARY OF CONCLUSIONS

(1) Most of the presently used cracking catalysts are of the crystalline, silica-alumina type. All three types of catalysts utilized in catalytic cracking (natural, synthetic, and synthetic-zeolitic) are built from the same principal elements and compounds, namely, silicon dioxide and aluminum trioxide.

(2) Definite differences in sulfur poisoning and activity for all three catalyst types had been observed, with the natural catalyst having the highest and the zeolite catalyst the lowest poisoning properties.

(3) All three catalyst types are known to have demonstrated affinity to water vapors. Due to the molecular similarities of H_2O and H_2S, the catalysts can adsorb H_2S also. Some affinity for sulfur-containing hydrocarbons has also been demonstrated.[62] Presently, however, insufficient data are available on the catalysts' affinity to H_2S and other sulfur-containing hydrocarbons at the conditions existing in fluid catalytic crackers.

(4) Although it has been determined that H_2S has a definite poisoning effect on natural catalysts, the mechanism of poisoning is not fully understood.

(5) Due to the high poisoning properties of natural catalysts, a means of reducing their poisoning was investigated. It was determined that contacting of the catalyst with steam can prevent or reduce this catalyst poisoning.

(6) Because the sulfur poisoning of zeolite and synthetic catalysts is much less severe, no evidence was available on the effects of steam contacting these catalysts.

(7) Hydrocarbon cracking using any of the catalysts will result in deposition of coke on the catalysts. Regardless of the various mechanisms for the presence of sulfur on the cracking catalysts (H_2S, thiophenic sulfur, adsorption or chemical reaction with the catalyst or coke, non-thiophenic sulfur) it has been definitely demonstrated that applying steam contacting (steam stripping) to spent natural catalyst will reduce the sulfur transported into catalyst regenerator and consequently reduce the sulfur oxide emission from the FCC regenerator.

(8) Steam contacting of natural catalyst has been applied in three locations in fluid catalytic cracking units: spent catalyst contacting (stripping steam), regenerated catalyst contacting (hydration steam), and steam contacting in the presence of FCC high sulfur feed hydrocarbons (dispersion steam). Applying steam at all three locations had a beneficial effect on improved catalyst activity. conversion, and reduced poisoning. No drawbacks from the steam contacting on the natural catalyst have been found.

(9) Stripping steam has been sufficiently demonstrated to have a significant effect on reduction of sulfur oxide emissions in regenerator off-gas (refer to Section 5.2.1 for details).

(10) At the present time, the refineries use steam stripping to recover hydrocarbons carried on the spent catalyst to the regenerator. Consequently, catalyst steam stripping equipment exists in refineries and refiners are fully familiar with this technique.

(11) Literature search and industry contacts failed to reveal that steam stripping has been considered and evaluated by the petroleum refiners as a means of regenerator off-gas sulfur oxide emission control.

(12) Present steam stripping rates are much lower than those applied to older (natural) catalysts (see Section 5.3.7). The rate of steam stripping applied to present catalyst and required to reduce sulfur oxide emissions from the FCC regenerator flue gas to the level of 200 ppm has not been determined. Applying the data available for natural catalyst and obtained in the late forties indicates that the steam stripping rate would have to be increased in existing units about four to twenty times. Considering the technical developments in the area of catalysts and equipment, this requirement may be significantly reduced. Even in the first studies with natural catalyst the steam rates in commercial units were about 2 to 5 times lower than those measured in pilot scale units and producing the same effects.

(13) If the sulfur carried by the spent catalyst is in the form of H_2S, stripping should be possible. If the sulfur is in the form of hydrocarbons, an indication exists that this sulfur can be replaced using steam and H_2S can be formed over Al_2O_3 catalyst. (See Section 5.2.2.)

(14) Steam contacting of the zeolitic catalyst at temperatures below 1100°F will not cause catalyst deactivation.[64]

(15) Steam stripping will result in increased production of H_2S, a product that is now easily handled by the refineries.

(16) Economics of steam stripping are closely competitive with other sulfur emission reduction alternatives even though the most conservative assumptions were applied in our steam stripping economic analysis.

(17) No special chemicals are needed except steam, which is available in the refineries and fully compatible with existing equipment.

(18) Since catalyst contacting occurs at the temperatures normally existing in FCC operations, no excessive heat exchange is required. The steam condenser used in steam stripping represents a much more efficient heat exchange than the gas-gas heat exchangers so often needed in add-on system applications.

(19) Although steam stripping will probably result in some increase in catalyst attrition rates, it offers a potential solution to reduction of particulate emissions from FCC regenerators. (See Section 5.3.4.)

(20) Further simplification of the steam stripping technique is possible so that only relatively minor FCC equipment modifications may be required (see options 2, 3, and 4 in Section 5.3.2).

(21) In some applications, catalyst steam contacting may, through reducing the amount of coke on the spent catalyst, decrease the heat load of the FCC regenerator to levels that would not be sufficient to maintain operating temperatures in this equipment. Additional investigation of these systems is needed to determine their present sulfur emissions and application feasibility of regenerating air preheating.

(22) Steam stripping appears very attractive for refineries having low sulfur emissions. Applying add-on systems to these refineries would require essentially the same capital investments as in the refineries with high emissions. Steam stripping could be applied by varying the steam stripping rates.

(23) Steam contacting can control total sulfur oxide emissions from the FCC regenerator regardless of the form in which the sulfur is emitted (SO_2, SO_3, H_2SO_4 mist).

5.2 PROCESS MODIFICATION ANALYSIS

The initial steps in our process modification analysis consisted of comparing the FCC process with moving bed catalytic cracking also called Thermofor catalytic cracking (TCC) based upon process operating variables. Analysis of available literature suggested that the differences in SO_2 emissions for these two types of catalytic cracking were not due to a difference in the type of crude oil processed in these refineries. Sulfur emission data and the majority of process operating conditions, summarized in Table 8, have been obtained at the same time and from the same, relatively small geographical location in the United States (Los Angeles, California), where presumably the same crude oil is processed. Also, the comparison was made for an average of 6 FCC and 9 TCC units, all again from the same geographic area.

Table 8. COMPARISON OF CATALYTIC CRACKING UNITS OPERATING CONDITIONS[1,17,55]

	FCC	TCC
Number of Units	6	9
Fresh Feed Rate, bpsd	156,000	69,000
Recycle Feed Rate, bpsd	35,000	38,000
Fresh Feed to Recycle Ratio	4.5	1.8
Catalyst Circulation Rate, Tons per Hour	14,000	1,400
Stack Discharge Rate, scfm (Dry Basis)	484,000	134,000
Sulfur Dioxide Emission, ppm	308-2190	65-141
Steam Stripping Rate, lb H_2O/1000 lb Catalyst	1.8-9	~15
Catalyst to Oil Ratio*	12	2
Stack Discharge to the Feed Ratio, scfm /bpsd	2.5	1.25
Reactor Temperature, °F**	885-975	780-950
Reactor Pressure, psig**	9-20	10-15
Regenerator Temperature, °F**	1,000-1,150	960-1,080
Regenerator Pressure, psig**	1-13	Atm. to 1

* Density of oil 7 lb/gallon, 42 gallons/barrel, 2,000 lb/ton

** All data have been obtained or calculated from Reference 1, except the data marked which were taken from Reference 17 or 55

Several conclusions can be drawn from the comparison shown in Table 8:

(1) TCC units have significantly lower sulfur dioxide emission levels than FCC units.

(2) Two and one-half-fold higher fresh-feed-to-recycle ratio for FCC units would indicate that much heavier feedstocks, that usually contain high amounts of sulfur, were processed in TCC units.

(3) The two-fold higher sulfur stack discharge rate per barrel per day of total feed for the FCC unit indicates that the absolute amounts of sulfur emitted from the FCC units were even higher than those indicated by ppm sulfur dioxide emission data.

(4) Both of the two previous conclusions indicate that sulfur oxide concentrations from FCC units were significantly higher than the sulfur emissions from TCC units.

(5) Although the data for the steam stripping rates and operational temperatures and pressures were taken from a different source than the rest of the operating conditions shown in Table 8, the data nevertheless represent the values that are generally applied in FCC and TCC units. With most of the operating conditions (temperature, pressure) relatively equal and approximately two-fold higher steam stripping rate for TCC units than that for FCC units, it is quite evident that the rate of steam stripping can be directly connected with the differences in sulfur emissions from the two unit types compared.

Based on these observations, additional evidence was sought on the effects of steam stripping on sulfur distribution in catalytic cracking operations to either support or refute this approach. The steam stripping approach was considered a simple and economically feasible modification of fluid catalytic cracking units. It was learned that steam stripping was and still is used by petroleum refiners to remove hydrocarbons from the spent catalyst and also to prevent catalyst poisoning to some degree. However, the technique has never been viewed as a means of reducing SO_x atmospheric pollution from catalytic cracking units. This statement has been confirmed a number of times during this study by communication with qualified individuals in the refining industry to whom this approach was presented. The present use of steam stripping (although at much lower rates) by petroleum refiners assures that the technique would be fully compatible with the petroleum refinery operations. Because of the slightly different purpose for which steam stripping is presently used and because essentially no evidence was found of use of this approach by petroleum refiners to control SO_x emissions, more evidence was needed as to the ability of steam stripping to control sulfur emissions from FCC regenerator. This is why the steam stripping approach was fully investigated and analyzed in this study.

5.2.1 Evidence of Effects of Steam Stripping on Sulfur Distribution in Fluid Catalytic Cracking

In the late 1940's, when catalytic cracking started to become a major source of motor gasoline, many oil companies were in the process of optimizing the operation of FCC units. Among the many problems that had to be solved was the problem of catalyst deactivation by sulfur present in FCC feedstocks and fed into the reactor. In an effort to understand the mechanism of

catalyst poisoning, several investigators studied the sulfur material balances around the FCC units using natural and synthetic catalysts. Their studies involved the determination of sulfur distribution in the products as a function of process operating conditions, feedstocks, and catalyst types.

Strong evidence of a correlation between use of steam stripping and degree of sulfur emissions in the regenerator flue gas is the comparison of operating conditions for both FCC and TCC units, presented in the previous section. This evidence is further supported by a comprehensive review article written by Sittig[25] who states, "When a feed stock containing H_2S is contacted with the catalyst, H_2S competes with any steam in the feed for locations in the catalyst Montmorillonite inter-laminar spaces. Controlled rehydration by steam prevents interaction of the catalyst with H_2S with subsequent poisoning." Work supporting this statement has been conducted and described by R. C. Davidson.[30] This work also discusses the theoretical aspects of natural catalyst sulfur poisoning and catalyst dehydration which result in a progressive increase in coke and gas yields at the expense of gasoline yield for both natural and synthetic catalysts.

Although most of the work has been carried out on a pilot scale, some commercial data are presented confirming laboratory findings that definitely indicated that catalyst hydration reduces sulfur poisoning and thus improves the catalyst activity, increases gasoline yield, and reduces the coke yields. In two comparable runs, one without and one with hydration, the amount of sulfur emitted from the regenerator was decreased to less than one half by using 0.5 wt % (based on catalyst) of rehydration steam.

In his tests, Davidson used high temperature steam in two different locations: (1) in the mixture with feed gas oil (dispersion steam) and (2) admitting steam near the bottom of the regenerated catalyst standpipe (hydration steam). About three times as much dispersion steam as hydration steam was required to obtain comparable benefits. Also, the dispersion steam did not prevent the catalyst from poisoning as well as did the hydration steam.

Additional investigations performed by Healy and Hertwig[31] and Conn and Brackin[32] concerning the use of high temperature steam to prevent sulfur poisoning of the cracking catalyst are of special interest in this discussion. Healy and Hertwig studied in detail the distribution of sulfur in the FCC feedstock to four major products, namely, cracked gas, gasoline, cycle oil, and coke. They found that about 50% of the feed sulfur remained in liquid products of fluid catalytic cracking. The rest of the sulfur was distributed between the gas product (45%) and coke (5%). Their study was conducted on a pilot scale with feeds of varying origin and sulfur content. The effect of other significant process variables, such as temperature, conversion, and pressure on sulfur distribution was also indicated. Three commercial cracking catalysts were studied, namely silica-alumina, silica-magnesia, and natural catalyst. Silica-magnesia catalyst gave the lowest amounts of sulfur in the coke (about 6.7 times lower than silica-alumina catalyst and 5 times lower than natural catalyst). This indicates that catalyst selection can be a significant factor in reducing sulfur emissions from the FCC regenerator. Similar observations have been reported by Sittig[25] where specially treated sulfur-resistant (SR) catalysts containing relatively high amounts of aluminum trioxide have been developed. The data on sulfur distribution obtained for silica-alumina catalyst at 900°F reactor temperature are presented in Figure 9. Other investigators have conducted similar studies.[33,34]

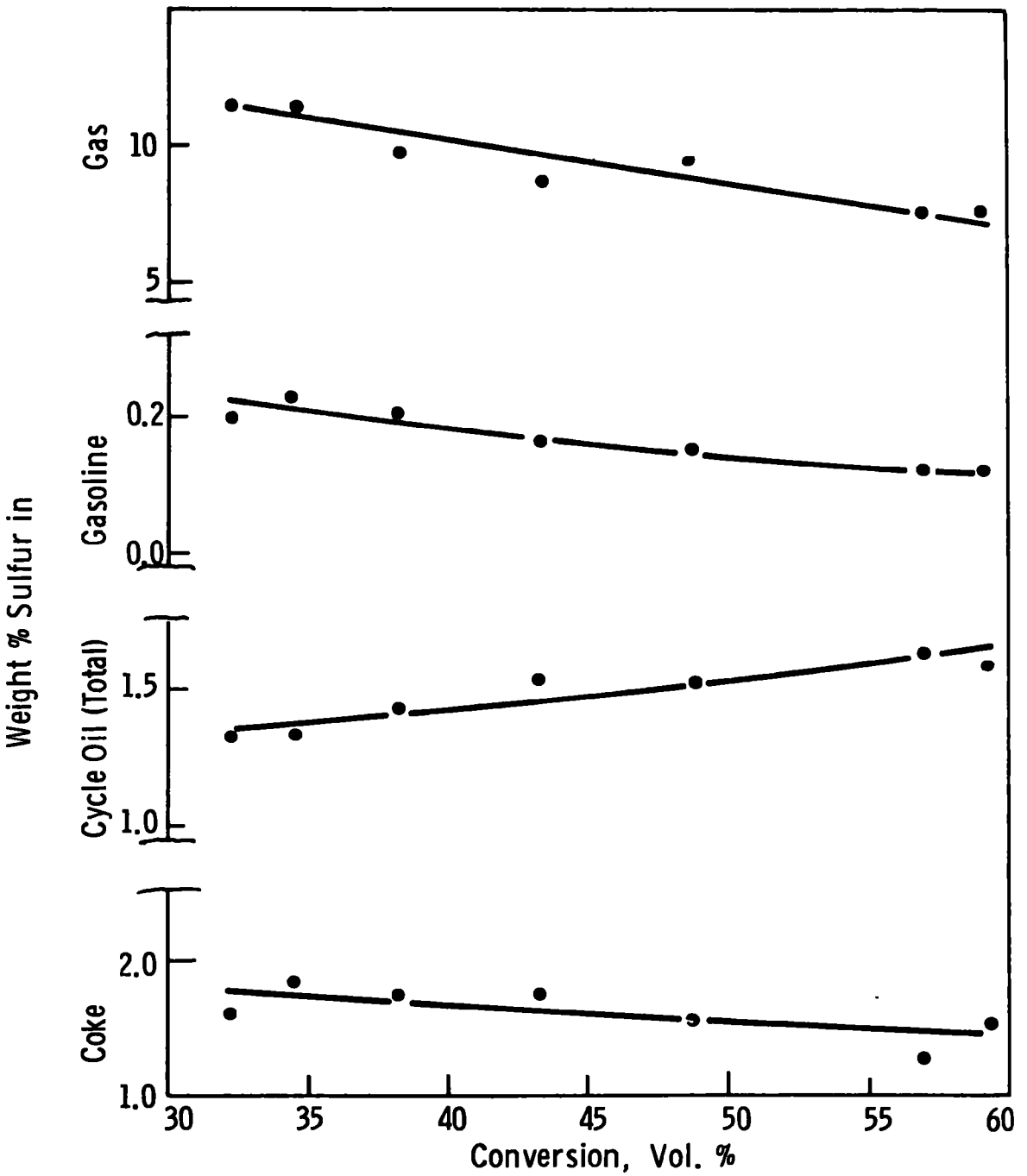

Figure 9. Distribution of Sulfur in FCC Products

In most of the experiments with silica-alumina catalyst the sulfur content of the coke was between 1.22 and 1.9 wt % depending on conversion. However, figures as high as 5 wt % (in one case 11%) have been reported depending on the type of the feed. The feed consisted of various types of virgin, cracked, or cycle gas oils with sulfur contents from 0.36 to 1.93%. The significant effect of steam stripping on the amount of sulfur in the coke has also been briefly discussed and reported. This effect has been observed with both good quality and contaminated natural catalysts. The data showing the variation of sulfur content of coke with the rate of steam stripping are presented in Figure 10. The sulfur removed from the coke at high stripping steam rates appears in the gas as H_2S.[31]

The other work, conducted by Conn and Brackin,[32] was a comprehensive study on prevention of catalyst sulfur poisoning by use of steam. The study was done on both pilot and full scales. Three different locations for steam injection were investigated. Two of these locations correspond to those studied by Davidson,[30] that is, dispersion and hydration steam. The third location of steam injection is in the spent catalyst stripper; this is termed stripping steam. All three cases have demonstrated that steam has a significant effect on sulfur distribution in fluid catalytic cracking.

The introduction of steam to the regenerated catalyst standpipe (hydration steam) serves to hydrate the catalyst prior to contact with oil, thus preventing loss of catalyst selectivity. Experimental work carried out using high sulfur gas oil and 0.5 wt % hydration steam (based on catalyst) basically confirmed the results obtained by Davidson[30] described earlier. The catalyst activity declined, the carbon factor practically doubled, and declines in conversion were observed after the use of hydration steam was discontinued.

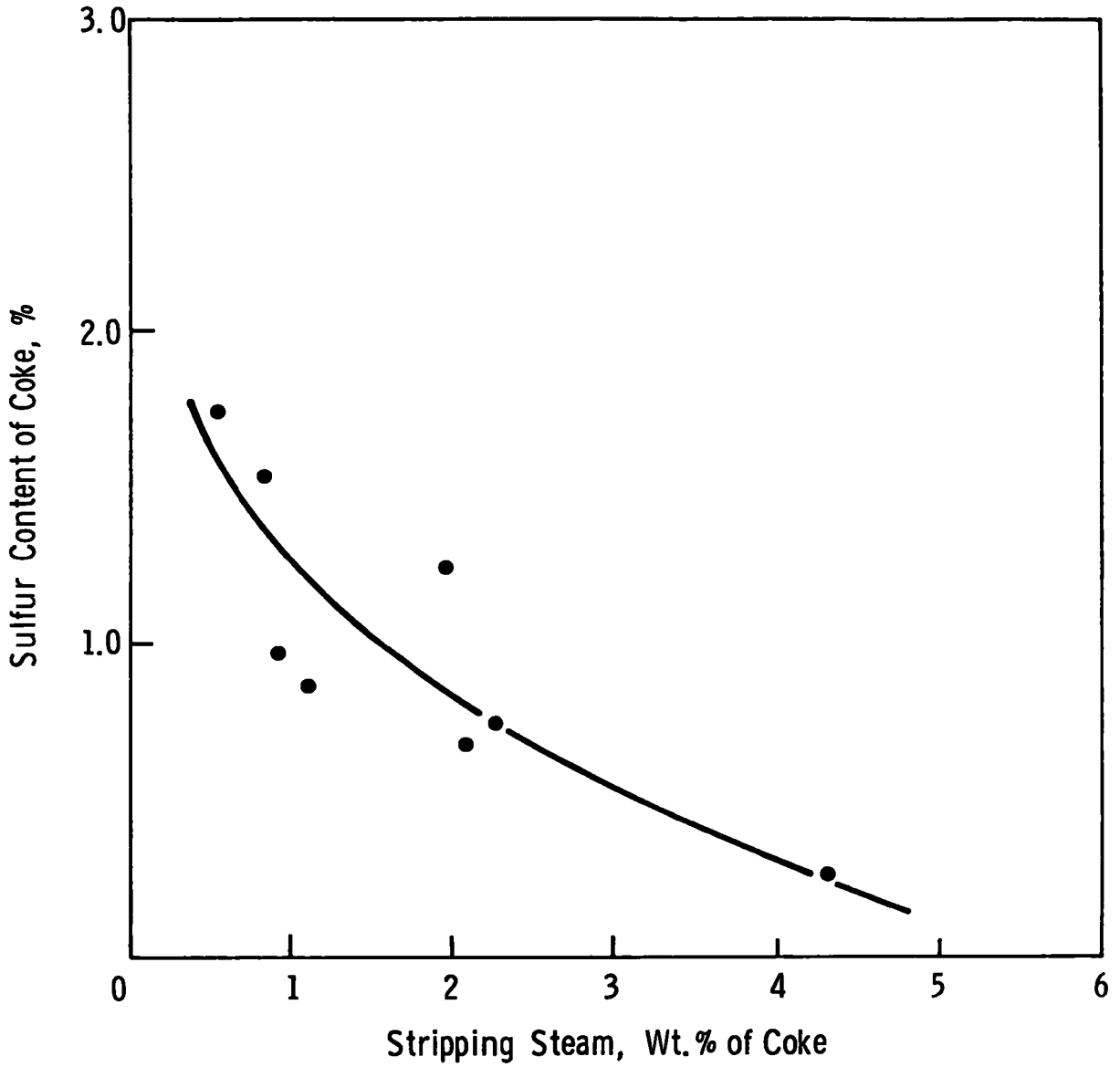

Figure 10. Effects of Steam Stripping Rate on Sulfur Content of Coke (Natural Catalyst)

Use of dispersion steam has also been investigated. Although the benefits of dispersion steam in maintaining catalyst selectivity claimed by Davidson have not been definitely confirmed, a marked improvement in product yields (0.4% dispersion steam resulted in more than 5% higher conversion) has been observed in cracking gas oil of high sulfur content.

Stripping steam was applied in both pilot and commercial units. In a pilot scale experiment a mixed gas oil containing 1.39% sulfur was cracked for a 24-hour period. The steam stripping "rate" was somewhat lower than that employed by commercial units, 0.5-0.8 wt % (based on catalyst). Also, no hydration or dispersion steam was used. After 24 hours the stripping rate has been increased to 4 to 6 wt %. The immediate effects of this experiment on increased catalyst activity and lowered carbon and gas factors are demonstrated in Figure 11 for both pilot and commercial units.

It should be noted that the steam stripping rates during the commercial experiment varied between 1.15 to 2.0 wt % and were considerably lower than the 4 to 6 wt % rates applied in the pilot plant. This can probably be explained by the better steam stripping efficiency obtainable in large-scale units.

Additional steam stripping experiments were performed in combination with hydration and dispersion steam. The coke yields varied from 1.2 to 5 wt %. Mixed gas oil containing 1.45% sulfur was used. The steam rates varied between 0.68-3.71 wt % for stripping steam, 0.27-1.5 wt % for dispersion steam, and 0.34-1.86 wt % for hydration steam. This rather complex experiment revealed that when hydration steam is present to protect the catalyst from sulfur poisoning, stripping steam can effectively be used to improve the properties of the catalyst, rejuvenate

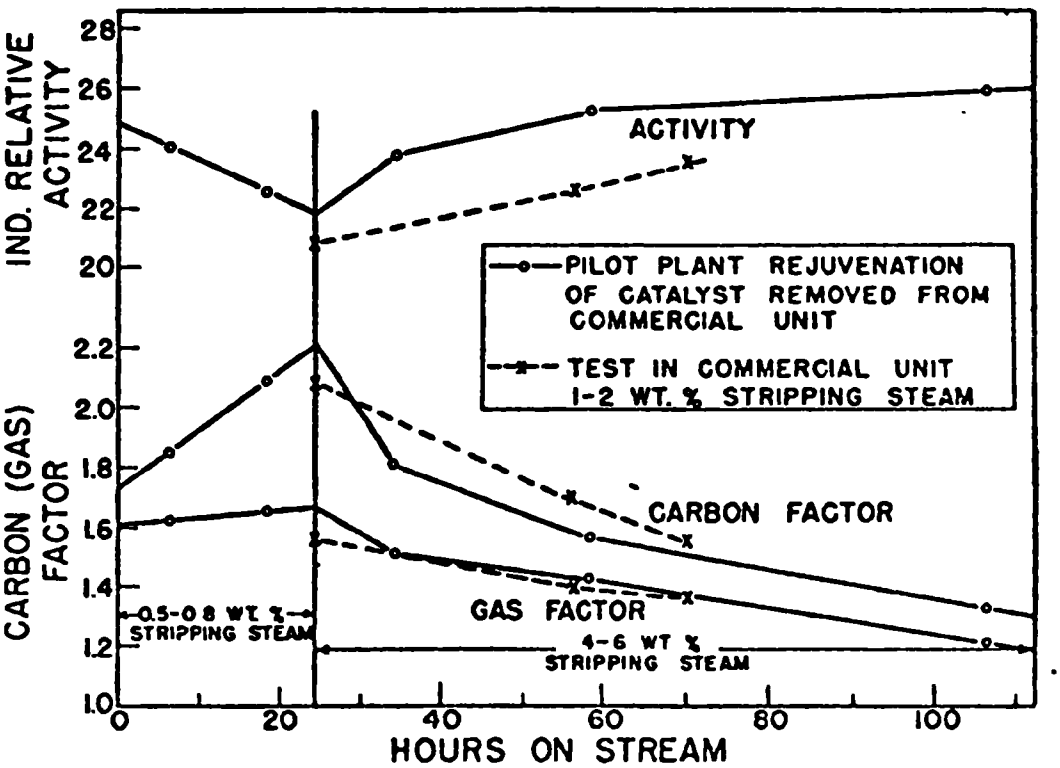

Figure 11. Improvement of Catalyst Activity and Selectivity with High Stripping-Steam Rate

the poisoned catalyst to selectivity levels approximating fresh catalyst, and reduce formation of coke.

Additional evidence of reduced sulfur emissions from the regenerator flue gas due to steam stripping is presented in Figure 12. One curve represents the data obtained by Conn and Brackin.[32] The other curve was obtained from the data measured by Healy and Hertwig[31] by using our mathematical model expressing the relationship between the hydrogen and sulfur content of the coke, CO_2/CO ratio in regenerator flue gas, and sulfur emissions , and presented in 3.4.1. A good agreement between the two measurements exists. A CO_2/CO ratio of 1.2 and a hydrogen content in coke of 0.1 were used in the conversion. As it can be seen from Figure 12, SO_2 emissions from FCC regenerator can be decreased to 200 ppm or lower by steam stripping the spent catalyst at the proper rates. The data in Figure 12 show that the quantity of steam required to achieve a 200 ppm level can vary from 2 to 5 wt % of catalyst (2-5 lb H_2O per 100 lb catalyst).

5.2.2 Theoretical Aspects of Steam Stripping

Heating of the silica-alumina catalyst to different temperatures results in different degrees of catalyst dehydration depending on heating temperatures. The water, normally part of the catalyst molecular structure, is driven off. The catalyst can be subsequently rehydrated by cooling. However, two temperatures appear to cause a significant structural change in the catalyst. If the natural catalyst is heated above 600°F, the water lost during the heating will cause a permanent structural change and the catalyst will not rehydrate by cooling and exposure to humidity. Heating of the catalyst above 1450°F will result in the destruction of the catalyst's montmorillonite structure.

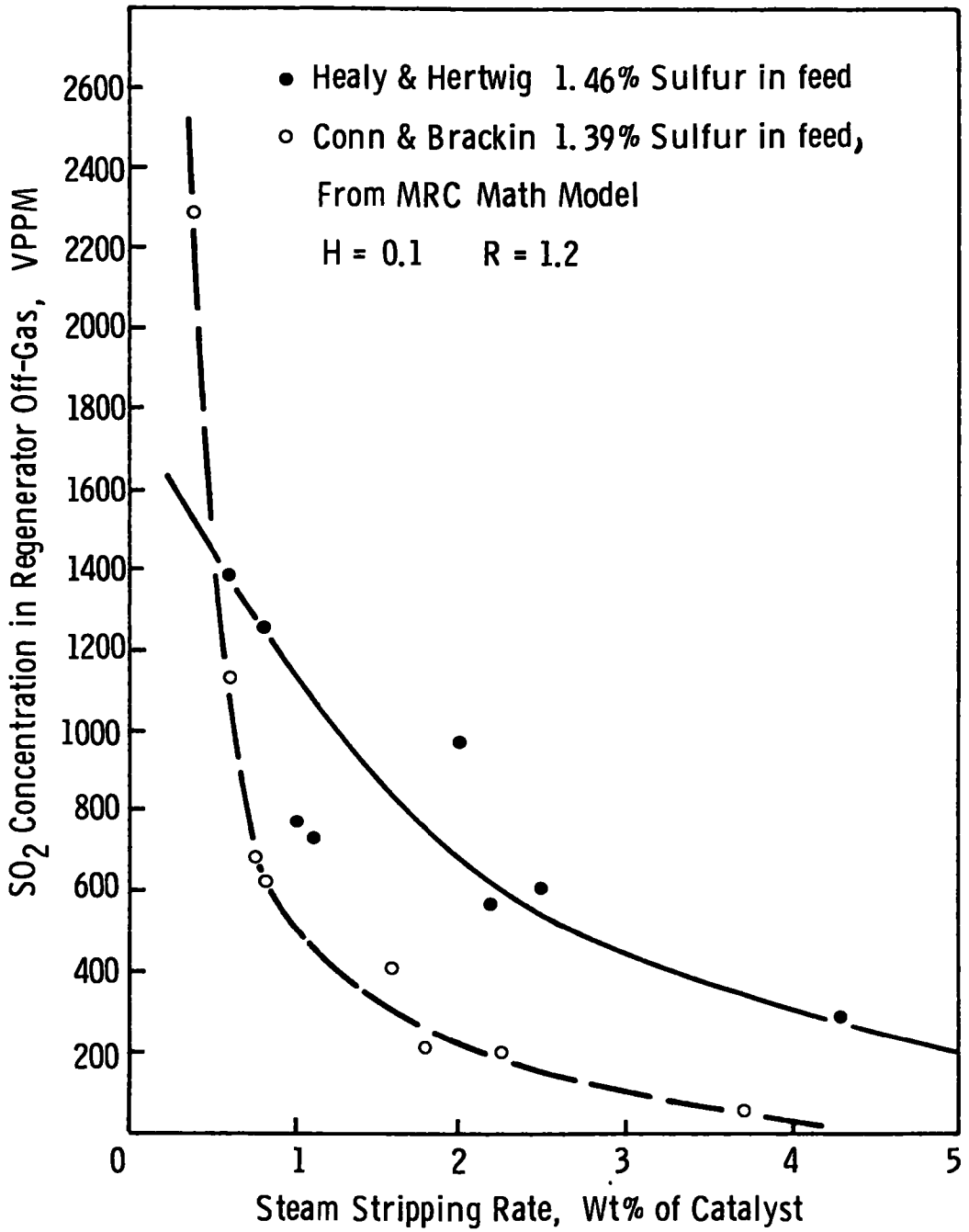

Figure 12. Effect of Steam Stripping of Spent FCC Catalyst on SO_2 Concentration in Regenerator Off-Gas

It is between these two temperatures that the catalytic crackers operate during the reaction and regeneration cycle. In this temperature range, usually at around 800°F, the catalyst will lose additional water which can, however, be resorbed and has been called by Davidson [30] the water of constitution.

The experimental work conducted by Davidson indicates that, owing to several analogous chemical properties of hydrogen sulfide and water, these two compounds can compete in sorption on silica-alumina catalyst. Adsorption of higher amounts of H_2S on the catalyst at 1050°F produces a material almost identical to that which has been sulfur poisoned and thus possesses lower activity, selectivity, and higher carbon yield. Many scientists believe that the poisoning is caused by a reaction of iron in the catalyst with H_2S and formation of iron sulfide. Two other experiments made by Davidson have definitely proven that presence of water can prevent the catalyst poisoning and that presence of iron on the catalyst does not seem to have significant effect on the poisoning.

Conn and Brackin [32] suggest that similar competitive phenomena occur between water, hydrogen sulfide, and other sulfur compounds normally present or formed during catalytic cracking. Since the concentrations of such harmful compounds are relativly high in the case of dispersion steam, larger amounts of steam are needed to protect the catalyst. The improvement of the poisoned catalyst by intensive steam stripping appears to be a result of the desorption of sulfur compounds from the catalyst; this has been demonstrated in Figure 12.

It is not known whether the removal of these sulfur compounds is due to a simple steam stripping action of hydrogen sulfide

and other sulfur compounds from the catalyst or whether it is brought about by reaction of the steam with the sulfur compounds to form hydrogen sulfide or some other volatile compounds. Even though the mechanism of steam stripping has not been fully determined, there is evidence to show that the sulfur appears in the stripper off-gas in the form of hydrogen sulfide.[31]

Some evidence also exists that at constant steam stripping rate the rapidity of poisoning of natural catalyst and the difficulty with which the poisoning is eliminated become greater with an increase of sulfur content in the feed. Thus, it appears that the net rate of sorption of the poisonous sulfur compounds onto the catalyst structure is a function of the concentration of these compounds in the atmosphere surrounding the catalyst, which tends to cause sorption, and the concentration of steam in this atmosphere tending to displace these compounds. As such, these adsorption-desorption phenomena will primarily depend on temperature, partial pressure of steam, and concentration of sulfur compounds.[32]

Basically, there are not sufficient data to determine the effect of this type of sulfur compounds on catalyst poisoning and coke formation. A recently published article[33] presents data on sulfur distribution in the FCC process using the silica-alumina and zeolite catalysts and suggests that the feed type is the most important variable affecting sulfur distribution. Other important factors the authors have observed which may become useful for better understanding of sulfur distribution in FCC units are mentioned below.

H_2S formation during cracking is kinetically controlled. Even though zeolite catalysts do display some desulfurization activity, the desulfurization reactions occur at a much slower

rate than do the cracking reactions. It appears that desulfurization of thiophenic compounds proceeds at a slower rate than for non-thiophenic sulfur compounds and that the H_2S is formed primarily from catalytic decomposition of non-thiophenic sulfur compounds.

In describing the types of sulfur compounds found in FCC feed, two terms are used to simplify the discussion: (1) Thiophenic sulfur is the sulfur that is part of an aromatic ring, as in thiophene. These compounds may be multi-ring compounds. (2) Non-thiophenic sulfur is sulfur that is part of straight or branched chain hydrocarbons, such as mercaptans or thioethers.

Exact distribution of sulfur to H_2S, gasoline, cycle oil, and coke varies with feed, catalyst type, conversion, and process variables, with space velocity and feed type being most significant. Due to the lack of experimental data, especially for newer catalyst materials,[45,46] and the rather broad range of variables at which commercial FCC units operate,[33] sulfur distribution phenomena are not well understood.

Some evidence exists[35] and some investigators believe[36] that sulfur is present in coke on spent catalyst as multi-ring thiophenic sulfur and that this type of aromatic ring structure will not react with steam to form H_2S. However, some other investigations conducted in this area[37,38,125] have produced evidence to show that a reaction between thiophene and its derivatives with steam can occur between 350-500°C (662-932°F) over a catalyst which, in one case, was identified as Al_2O_3. The following reaction scheme can be assumed.

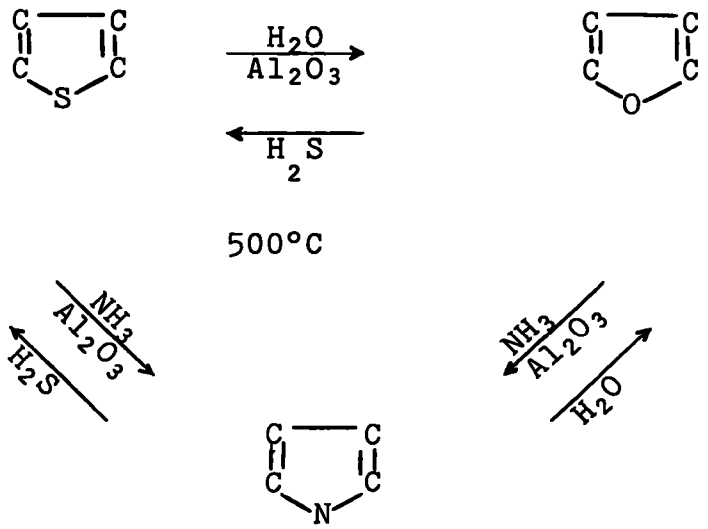

5.3 APPLICATION OF STEAM STRIPPING TO EXISTING FCC UNITS

Two possible conceptual methods of applying steam stripping to existing FCC units have been identified:

(1) An increase of the present steam stripping rates in existing equipment to the levels needed to achieve an adequate SO_x reduction in the regenerator flue gas.

(2) The use of a secondary (add-on) stripping system. The spent catalyst is removed from the existing equipment and transferred to a secondary stripper. Sulfur-free catalyst is then returned to the regenerator.

As explained previously, preliminary calculations based upon the data collected by Conn and Brackin and Healy and Hertwig (Figure 12) indicate that the steam stripping rate required to achieve a 200 ppm SO_2 concentration in regenerator off-gas would be approximately 2 to 5 lb of steam per 100 lb of catalyst. In our

technical and economic evaluations we have assumed 4 lb of steam per 100 lb of catalyst will be sufficient. It should be noted, however, that the steam stripping rates obtained by Conn and Brackin and Healy and Hertwig were determined in the late 1940's for natural catalysts used in cracking high sulfur feedstocks. More recent technical developments in the area of catalysts as well as more efficient equipment[66] can have a significant effect on determining the actual steam stripping rates. Even in 1947-1949, when the bulk of experimental work related to steam stripping was implemented, it was observed that significantly lower steam stripping rates are required in commercial applications than those determined in pilot scale units.

The rate of steam stripping will also be a function of the sulfur concentration in the feedstock processed by a refinery. This feature can become very advantageous for units that presently experience relatively low SO_x emissions. A slightly increased steam stripping rate may result in emissions reduced to the levels desired.

From the facts just presented it can be reasonably expected that much lower steam stripping rates will be required in practical applications of steam stripping techniques to reduce sulfur oxide emissions from regenerator flue gas. The true stripping rates for each application will have to determined by experimentation.

Lacking more accurate data, we have applied the most conservative assumptions in our technical and economic analysis of the steam stripping concepts to produce the worst, most unfavorable conditions possible. This fact should be very strongly considered whenever the concept of steam stripping as presented in this report is evaluated.

5.3.1 Effect of an Increase of Steam Stripping Rate

Increasing the steam stripping rate would allow the stripping steam and stripped sulfur compounds to pass through the existing stripper, reactor, overhead vapor line and FCC fractionator to the fractionator overhead condenser where the steam is condensed and water is removed from the system (see Figure 1). Performing the SO_x emission control in this manner would force the sulfur through the present facilities and remove it downstream in existing sweetening equipment.

Typically, the rate of steam stripping (4 lb/100 lb of catalyst) assumed for the technique evaluation would double or triple the flow rate in the reactor, vapor line, fractionator, and condenser. Since refineries are usually built with only a 10% to 15% flow capacity safety factor,[27,28,29] the existing equipment could not handle increased flow rates of this size. Thus major modifications of present equipment would be required. The types of modifications necessary are: increased stripper size, reactor size, vapor lines, and adding a parallel train for fractionation and condensation.

The bulk estimate for achieving such modifications is stated to be 1/3 the price of a new fluid catcracker. (A complete unit consists of reactor, regenerator, fractionators, and all other supporting equipment.) The price of a complete FCC unit handling the 25,000 barrel total feed per stream day is approximately $18,000,000. Thus, use of this method of stream stripping would require an outlay of about $6,000,000.

5.3.2 Secondary (Add-On) Separate Steam Stripper

The second emission control alternative mentioned above consists of diverting the spent catalyst stream to a secondary, separate

steam stripper. In performing the emission control in this manner, there are several options available:

(1) Transfer the spent catalyst (using steam as a carrier) to a second fluidized bed of catalyst where sufficient contact between steam and catalyst is maintained. The vapors leaving the catalyst stripper are condensed, and sour water and H_2S-rich gas are separated. The vapors leaving the separator are sent to a Claus unit for sulfur recovery and the sour water is sent to a water treatment plant for sulfur (H_2S) recovery and separation of catalyst fines from the effluent water. This option is analyzed in detail later and is schematically presented in Figure 13.

(2) Use essentially the same flow scheme as in option 1 above except that a cyclone would be used instead of the fluidized stripper. Using a stripping system of this sort is potentially feasible if sufficient contact between steam and catalyst can be obtained in the transfer line and the cyclone.

(3) Place a second catalyst stripper, which is similar in design to the existing stripper, between the regenerator and the existing catalyst stripper. This stripper would be designed to remove the stripper off-gas as a separate stream so that the bulk of steam would not dilute the products of FCC reactor. In a sense, this option consists of increasing the size of the existing catalyst stripper and operating it under conditions efficient for sulfur as well as hydrocarbon removal.

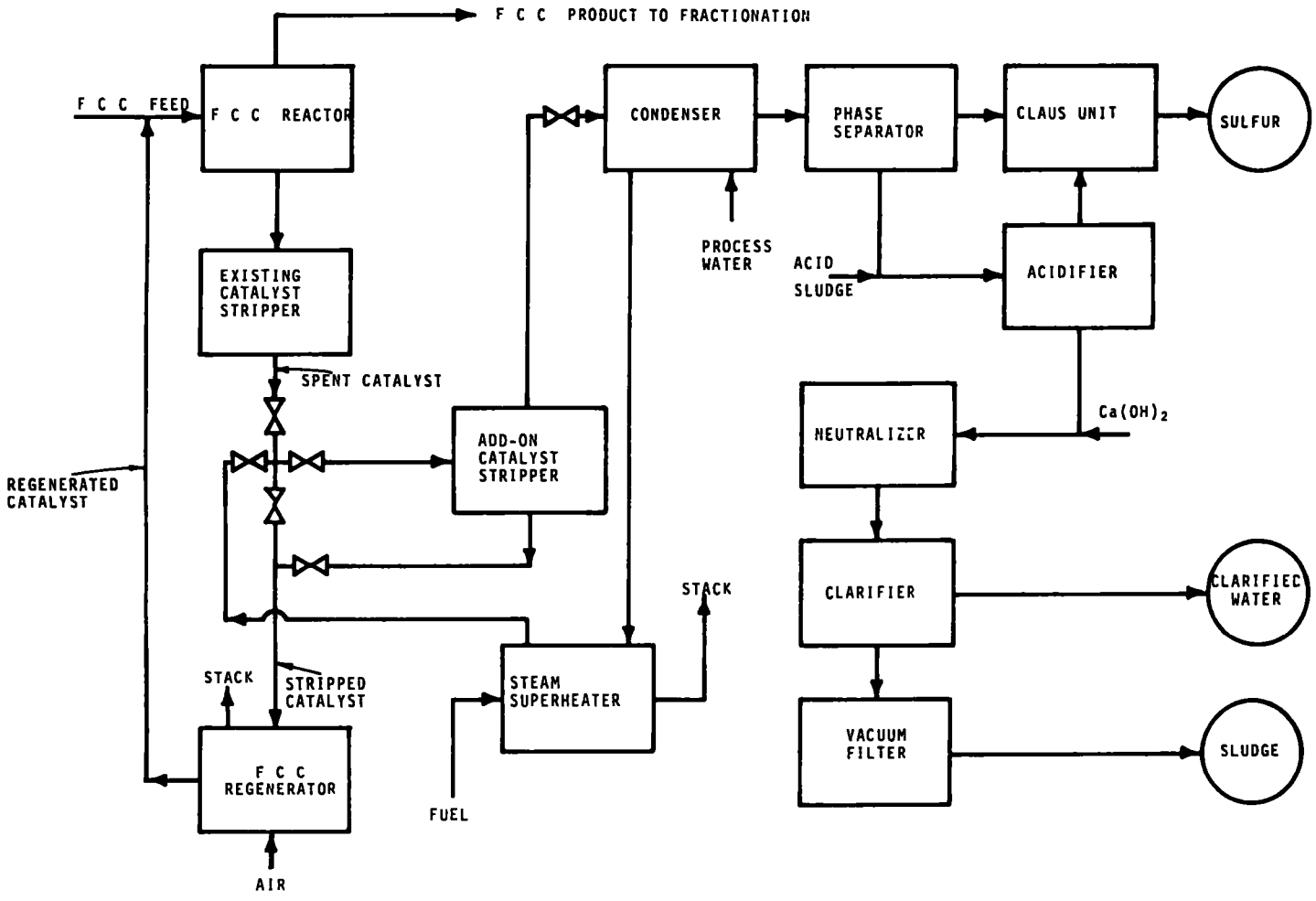

Figure 13. Block Diagram for a Conceptual Steam Stripping Facility

(4) Increase the steam stripping rate in the existing stripper. Dilution of FCC product stream can be avoided by proper modification of the existing stripper similar to that described in option 3, so that the excess steam can be removed as a separate stream.

Of the four options presented, the first option underwent technical and economic analysis. This option is evidently the most expensive of the four options because of the large increase in catalyst inventory and catalyst handling requirements. If any of the three other options can be applied, a more efficient and simpler modification and operation will result, and more favorable economics can be expected. Additionally, the last three options at the time of this study appeared to be rather conceptual, and an insufficient technical basis could be established for their full economic evaluations.

5.3.3 Application of Secondary Steam Stripping (Option 1)

In attempting to assess the technical aspects of steam stripping, the following processing scheme was assumed and presented schematically in Figure 13.

Catalyst feed for the add-on secondary stripper is withdrawn continuously from the catalyst standpipe, which connects the existing catalyst stripper to the regenerator. The entire catalyst stream is diverted by steam through a transfer line to a fluidized bed catalyst stripper. The catalyst, after stripping, is recycled back to the FCC unit for regeneration.

Stripper off-gas primarily consisting of steam plus H_2S and carrying some entrained catalyst particles is sent to a condenser for condensation. The H_2S-rich vapor stream and the sour water

from the condenser are separated in a phase separator. The H_2S-rich stream is sent to a Claus unit for sulfur recovery while the liquid stream is sent to wastewater treatment for H_2S recovery and catalyst fines removal. The liquid stream may also contain condensable hydrocarbons depending on the operating efficiency of the primary catalyst stripper. However, the extent of this potential problem cannot be properly evaluated due to a lack of appropriate data.

The sour water treatment plant consists of an acidifier, a neutralizer, a clarifier, and a vacuum filter. The acidifier is fed with waste acid sludge produced in the refinery alkylation operation. (Practically all refineries larger than 30,000 bpd having an FCC unit also have alkylation units.) Acidifying is needed to lower the pH of the liquor and thereby decrease the solubility of H_2S. The H_2S that is driven off in the acidifier is also sent to a Claus plant for sulfur recovery.

The acidic water is neutralized with calcium hydroxide before being sent to a clarifier for settling of catalyst particles. The neutralized clarified water can be either disposed of or reused. The sludge leaving the clarifier is dewatered in a vacuum filter and sent to landfill for disposal.

The application of secondary steam stripping for refinery FCC regenerator SO_x control requires some additional facilities. It must be pointed out, however, that many modern refineries already accommodate some or all of these facilities to handle the wastes normally produced from petroleum refining. Thus, utilization or expansion of these facilities to handle the additional load resulting from steam stripping would have to be evaluated separately for each specific refinery and application.

Our economic evaluations of the steam stripping technique were carried out for three nominal capacities of FCC units: 10,000,

45,000 and 150,000 bpsd. It was assumed that no facilities to process waste streams resulting from this approach are available except for the Claus plant. It was also assumed that the available Claus plant can handle increased loadings of hydrogen sulfide without expansion.

In our first evaluation for a 45,000 bpsd FCC, it appears that the cost of catalyst lost due to attrition in the secondary steam stripper is a major part of the operating cost for this case and will depend on attrition rates and catalyst/oil ratio. The attrition rates were assumed to be 0.2 lb of catalyst per barrel of feed. This attrition rate is considered typical in existing FCC operations. In other words, we have assumed that the catalyst attrition will essentially double (compared to existing conditions) if steam stripping is utilized.

Realizing that in FCC operation two major pieces of equipment, the reactor and the regenerator, are involved and participate in catalyst attrition, application of the attrition rate of 0.2 lb of catalyst per barrel of feed to an additional piece of equipment, the steam stripper, appeared to be rather pessimistic. Rates amounting to about 50% of this rate or 0.1 lb/ barrel should be more realistic.

The catalyst/oil ratio can vary between 4 and 20 lb of catalyst/ lb of oil. The recent tendency in refineries is towards lower catalyst/oil ratios. Our cost estimates were prepared for both 0.1 and 0.2 lb/barrel catalyst attrition rates, and catalyst/oil ratios of 6 and 12, respectively, and are presented in Figures 14 and 15, as typical and worst cases. The detailed cost estimates for all three sizes and both cases are summarized in Appendix E.

5.3.4 Control of Other Pollutants with Steam Stripping

As was shown earlier in Table 2, the regenerator off-gas contains a number of atmospheric pollutants in addition to sulfur oxides.

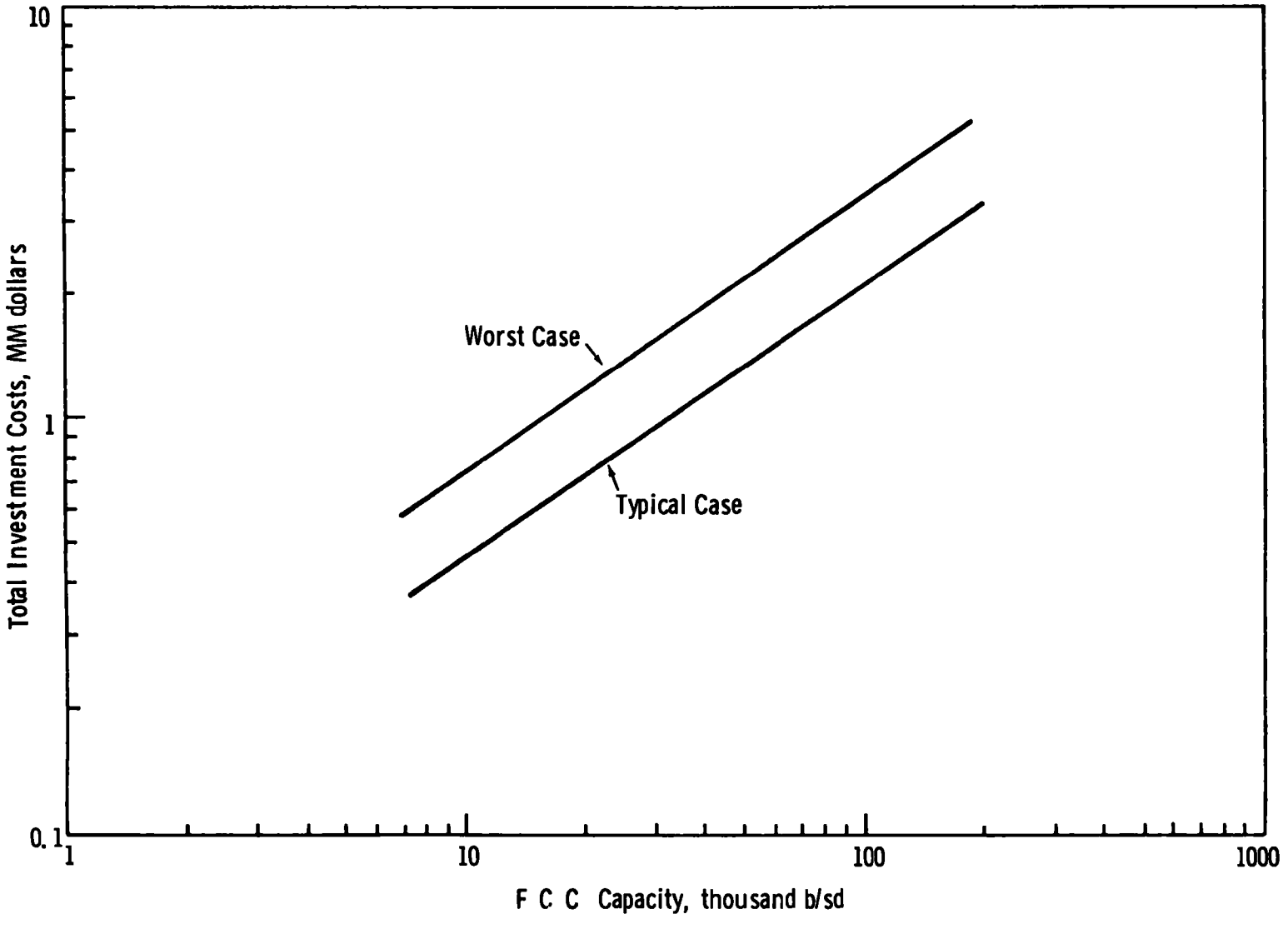

Figure 14. FCC Catalyst Steam Stripping, Capital Investment Cost (February 1973)

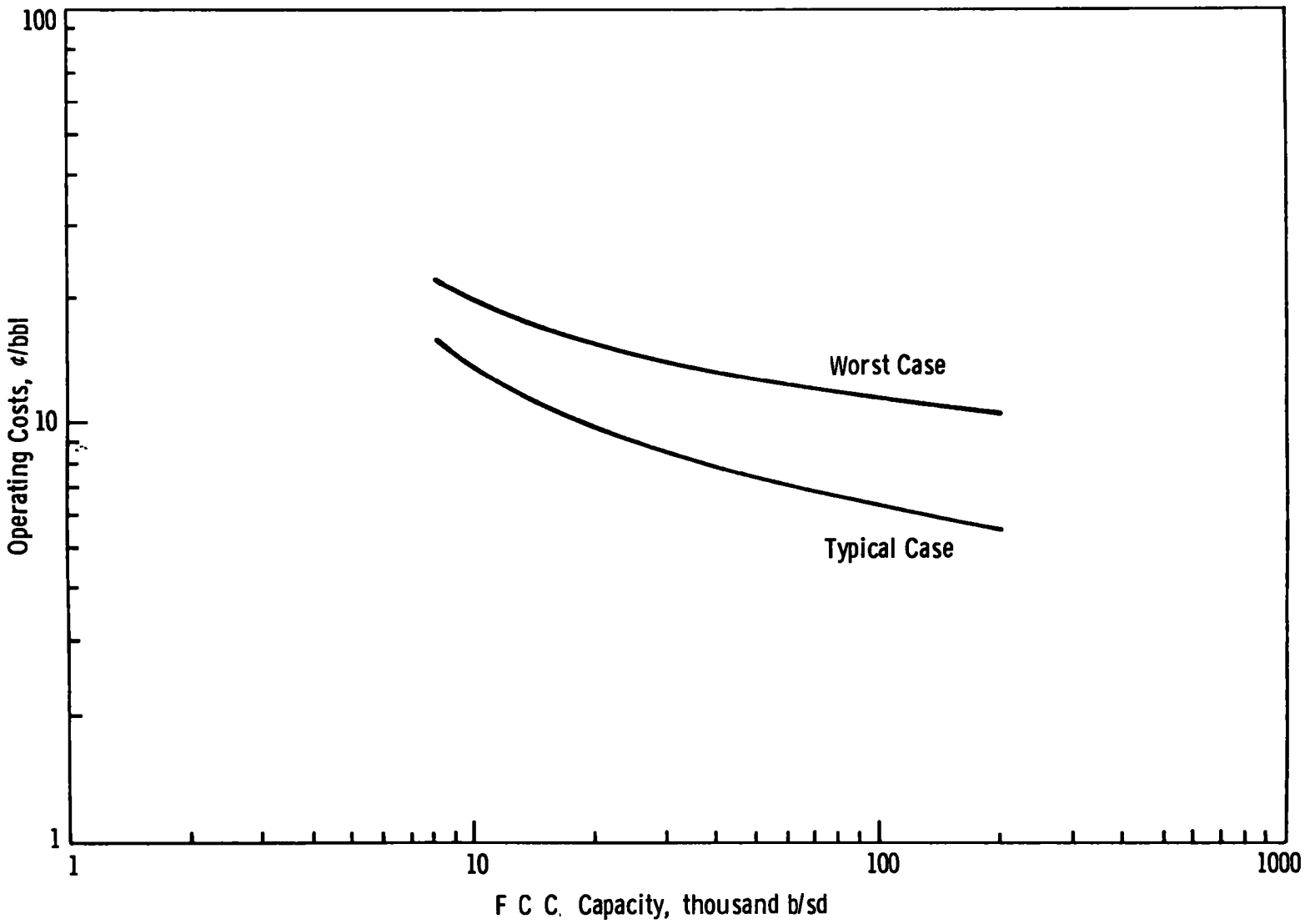

Figure 15. FCC Catalyst Steam Stripping, Operating Cost

Assessment of the effects of steam stripping on these additional pollutants is premature at this time. It is conceivable that steam stripping may reduce the amounts of nitrogen-containing hydrocarbons carried to the regenerator, but the effect of this process on nitrogen oxide emissions is presently unknown. Obviously, carbon monoxide and some of the hydrocarbons can be controlled by oxidation in the CO boiler, accompanied with heat recovery. In the CO boiler the additional introduction of nitrogen oxides as well as sulfur oxides can be expected, especially if sulfur-free supplementary fuel is not used.

In the reduction or removal of particulate matter, the steam stripping may play an important role if proper design modifications are made. Particulate emissions are caused by catalyst particles of the size that cannot be removed in existing cyclones in the regenerator. If the catalyst fines which would not ordinarily be removed in the regenerator can be removed before reaching these cyclones, then FCC particulate emissions could be reduced. The steam stripper and the cyclone in it can be designed to permit these catalyst fines to be carried to the water treatment facility downstream of the stripper and prevent their entrance to the regenerator. This concept is obviously still theoretical and will require practical verification. Its success will depend on attrition rates or formation of catalyst fines in various locations of future FCC units.

6. REGENERATOR FLUE GAS DESULFURIZATION

The third approach alternative for reduction of sulfur oxide emissions from FCC operations comprises processes capable of removing sulfur oxides from the flue gas leaving the FCC regenerator. These processes were evaluated as add-on systems downstream from the cracking catalyst regenerator.

Inclusion of the add-on processes in our study was a result of noting the apparent similarities in sulfur oxide concentrations existing in FCC regenerator off-gas and in power plant flue gases, for which these processes have primarily been developed or are applicable. The Federal Government, as well as the industry itself, have been committed to development of flue gas desulfurization technology for several years. Consequently, the application of power plant flue gas desulfurization technology to reduction of sulfur oxide emissions from FCC units could not be overlooked.

The development of over one hundred flue gas desulfurization processes has been actively continuing for several decades and has been even further intensified in recent years by the increasing effort by the Environmental Protection Agency to protect our environment by legislative action.

On the other hand, very few such processes have been considered for refinery application.[70,81] In order to include the most recent developments in flue gas desulfurization we prepared a comprehensive list of the existing processes as the basis for further process screening and evaluation. The processes were then analyzed and screened according to specific selection criteria to obtain a manageable number of processes for further detailed evaluation. Six final process candidates have been selected.

6.1 SUMMARY OF CONCLUSIONS

(1) Three general categories of add-on gas desulfurization systems have been selected from an initial screening of over 100 processes. The first, the adsorbent system category, includes the Westvaco process, the Shell Flue Gas Desulfurization process, and the Union Carbide PuraSiv-S process. The second, the scrubbing system category, includes the Wellman-Lord sodium sulfite process and the magnesium oxide slurry process. The third, the oxidation system category, includes the Monsanto Company CAT-OX® catalytic oxidation process.

(2) The Westvaco, Shell, and Wellman-Lord processes are presently the most feasible and most applicable add-on systems for sulfur oxide emission reduction in FCC regenerator flue gas.

(3) Based on available information, the Westvaco and Shell processes have been rated equally feasible for FCC regenerator off-gas desulfurization. Both processes are at the point of commercial demonstration and would be fully compatible with the petroleum refinery operations. The Shell process has been developed by petroleum engineers for refinery application and certainly should be considered fully in line with common design and operation refinery practices. The flexibility of the Westvaco process may appear very attractive for some refineries, especially those not having any sulfur treatment facilities at the present time. This process can produce three types of sulfur products, allowing adjustment to market conditions.

(4) Among the scrubbing systems, the Wellman-Lord process is well developed for commercial use. The process is very often applied to Claus plant tail gas desulfurization in refineries. However, general operational difficulties associated with the wet scrubbing media, mist elimination, and gas reheat, plus the negative effects of the presence or formation of sulfur trioxide in these systems, place the Wellman-Lord process below the adsorbent processes. Both the Westvaco and the Shell processes remove sulfur in its oxidized hexavalent form and should not have major drawbacks due to the presence of sulfur trioxide.

(5) None of the add-on systems offers the simplicity, flexibility, and general refinery applicability of steam contacting of the cracking catalyst. Additional testing is needed for the steam contacting technique, but this is the case with add-on techniques too.

(6) The oxidation systems, represented by the CAT-OX catalytic oxidation process, did not appear to be feasible for refinery applications. The rather poor quality sulfur product and potential catalyst plugging and poisoning effects caused by cracking catalyst fines and carbonaceous fractions, respectively, which are present in FCC regenerator flue gas, have eliminated this process from further consideration.

(7) On the basis of the conclusions given above, the fluid catalytic cracking sulfur oxide emission reduction techniques have been ranked as follows:

1. Cracking catalyst steam contacting
2. The Westvaco and Shell sulfur oxide adsorbing processes
3. The Wellman-Lord sodium sulfite scrubbing process

6.2 CANDIDATE PROCESS SELECTION

Our initial tabulation of processes yielded a total of 110 potential candidates for desulfurization of flue gases. These are summarized in Table 9. To reduce this number to a manageable few for detailed evaluation, a set of criteria by which processes could be eliminated from further consideration was established.

In order to select a reliable and relatively troublefree process for refinery application, the processes in Table 9 were screened four times. The last column of Table 9 shows in which screening a process was eliminated.

The first screening was based on several factors. Processes were eliminated from further consideration if they were unable to reduce the SO_2 concentration in the effluent to the atmosphere to less than 300 ppm. They were also eliminated if they were obsolete, of limited success, abandoned, had corrosion problems, had an unfavorable U.S. market, were proprietary, would not license, had technical difficulties, had slow kinetics, were not versatile, were of limited application, or if insufficient information was available. Application of these criteria eliminated 65 processes.

In the next level of screening, each of the remaining 45 processes were evaluated on specially prepared forms. An example of the form used in this evaluation is presented in Appendix G. The form provided space for listing all technical and economic information

Table 9. FLUE GAS DESULFURIZATION PROCESSES

Process Name	Developer	Development To Date	Raw Materials	Byproducts	Effluent Concentration ppm out/ppm in	Remarks	Eliminated in Screening
Flue Gas From Boilers							
Alkalized Alumina	Central Elec. Generating Board (Britain)	Bench Scale	Reducing Gas	H_2S			1
Alkalized Alumina	USBM	Pilot Plant	Reducing Gas	H_2S		Discontinued, high operating cost, and high capital	1
Amine Absorption	Arthur D. Little Inc.	Bench Scale				Abandoned	1
Ammonia Scrubbing	USSR	Pilot Plant	Ammonia	SO_2			1
	Electricite de France	Pilot Plant	Ammonia	SO_2, $CaSO_4$			1
	Fulham	Pilot Plant	Ammonia	S, $(NH_4)_2SO_4$		Abandoned Corrosion	1
	Mitsubishi	Pilot Plant	Ammonia	$(NH_4)_2SO_4$	300/3000		3
	Showa-Denko	Unknown	Ammonia	$(NH_4)_2SO_4$	150/3000	Abandoned Corrosion	1
	Wade Company	Pilot Plant	Ammonia	$(NH_4)_2SO_4$			1
	TVA	Pilot Plant	Ammonia	SO_2			3
	Hixson	Pilot Plant (TVA)	Ammonia	SO_2			3
	Poland	Unknown	Ammonia				1
Cal-Sox	Monsanto Co.	Pilot Plant		$CaSO_4$-$CaSO_3$			3
Catalytic Oxidation	Kiyoura	Pilot Plant	Ammonia	$(NH_4)_2SO_4$			2
Cat-Ox	Monsanto Co.	Commercial		H_2SO_4(78%)	200/2000		4
CO Reduction	Univ. of Massachusetts	Laboratory	CO	CO_2; S		Formation of Carbonyl Sulfide and Hydrogen Sulfide	1
Caustic Scrubbing	Kureha	Full Scale	NaOH	Na_2SO_3		Will Not License	1
	Ionics	Pilot Plant	NaOH	SO_2, H_2SO_4(30%)	150-300/3000	Electrolytic Regeneration	1
	General Motors	Full Scale	NaOH	Na_2SO_4 or $CaSO_4$			3
Char, Dry	Bergbau-Forshung	Pilot Plant		SO_2			2
	Kansai	Full Scale		SO_2		Carbon Attrition	1
	Reinluft	Pilot Plant		SO_2		Claim to Eliminate NO_x	2
	Westvaco	Pilot Plant		Sulfur	0-200/2000		
Char, Wet	Hitachi	Pilot Plant		H_2SO_4(15%)	300/3000		2
Char, Wet	Lurgi	Full Scale (2 small boilers)		H_2SO_4(25%)			3

Process Name	Developer	Development To Date	Raw Materials	Byproducts	Effluent Concentration ppm out/ppm in	Remarks	Eliminated in Screening
H_2S Reduction	Peter Spence, Ltd.	Laboratory	H_2S	Sulfur			2
	Princeton Chemical Res. Inc	Pilot Plant	Natural Gas	Sulfur		NO_x Interference	1
Lead Chamber Process	Tyco	Laboratory		Nitric Acid Sulfuric Acid			2
Lead-Zinc Ore Residues	Bulgaria	Laboratory	Zn-Pb Ore Residues	SO_2	300/2000		2
Lignite-Ash Still Process	Firma Karl Still (West Germany)	Pilot Plant	Lignite	SO_2		Reaction Rates Too Slow - Plant Shut Down	1
Lime Injection, Dry	Germany	Pilot Plant					1
Lime Scrubbing General	Bahco (Sweden)	Full Scale		$CaSO_3$-$CaSO_4$	100/2000		1
	Bankside (England)	Full Scale	$Ca(OH)_2$	$CaSO_3$-$CaSO_4$	300-600/3000	Limited Success For 20 years, Disposal Process	1
	Bischoff	Pilot Plant	$Ca(OH)_2$ $CaCO_3$	$CaSO_3$-$CaSO_4$	200-400/2000		3
	Mitsubishi	Full Scale H_2SO_4 Plant	$CaCO_3$-$Ca(OH)_2$	$CaSO_3$-$CaSO_4$	300/3000	High Cost	3
	USSR	Pilot Plant	Lime	$CaSO_3$-$CaSO_4$	300/2000	Disposal Problem	1
Lime Scrubbing Wet	Howden ICI Process (England)	Full Scale	Lime	$CaSO_3$-$CaSO_4$	300/3000	Plant Shut Down, Scaling Problem	1
Limestone Injection Dry	Bergbau-Forschung (Germany)	Laboratory	Limestone	$CaSO_4$			2
Limestone Injection Dry	Fuel Research Institute (Czechoslovakia)	Full Scale Steam Boilers	Limestone	$CaSO_3$-$CaSO_4$		Low Effic.	1
Limestone Injection Dry	TVA	Pilot Plant	Limestone	$CaSO_3$-$CaSO_4$		Low Effic.	1
Limestone Injection Dry	Central Research Institute of Electric Power Industries (Japan)	Pilot Plant				Low Effic.	1
Limestone Injection & Scrubbing	Rutgers Univ.	(Early Stage)	NaOH	H_2S			2
	Bischoff (Germany)	Pilot Plant	Lime	$CaSO_3$	400-200/2000	Expensive	1
	Combustion Engineering	Full Scale	Limestone	$CaSO_3$		Not Versatile to Different Boiler Types	1
	TVA	Pilot Plant	Limestone	$CaSO_3$			1
Limestone Slurry Scrubbing	Commonwealth Edison	Full Scale	Limestone	$CaSO_3$			1
	Detroit Edison	Full Scale				Same as Combustion Engineering Above	1

Process Name	Developer	Development To Date	Raw Materials	Byproducts	Effluent Concentration ppm out/ppm in	Remarks	Eliminated in Screening
Limestone Slurry Scrubbing	TVA	Pilot Plant	Limestone	$CaSO_3$			3
	Zurn Industries APCO/Key West, Florida	Pilot Plant	Limestone	$CaSO_3$		Key West Fla., In Operation	3
	Procon-UOP	Pilot Plant	Limestone	$CaSO_3$			1
Magnesium Oxide Process	Chemical Construction Corp.	Pilot Plant	MgO	SO_2			4
	USSR	Pilot Plant	MgO	SO_2	100-200/2000		1
Manganese Oxide	Mitsubishi	Pilot Plant	MnO NH_3	$(NH_4)_2SO_4$	130/1300	MnO Air Pollution	3
Metal Oxide Slurry	Grillo	Pilot Plant	MgO	SO_2	300/3000	Complex System	1
Molten Carbonate	Atomics International Division	Laboratory		H_2S		Difficult to Retro-fit	2
Na_2CO_3 Absorption	Precipitair Pollution Control	Pilot Plant	Na_2CO_3	Na_2SO_3	600/2000	Need Baghouse	1
NOSOX	Monsanto Co.	Pilot Plant	NaOH	SO_2, Na_2SO_4, NaOH			2
Potassium Carbonate & Molten Potassium Thiocyanate	Garret R&D Company	Laboratory		SO_2			2
Potassium Formate	Consolidation Coal Co.	Laboratory		H_2S, CO_2			2
Potassium Phosphate	TVA	Pilot Plant	Potassium Phosphate	H_2S		No Further Work Planned, Limited Market For Fertilizers	1
Potassium Sulfite	Wellman-Lord	Pilot Plant	H_2SO_3	SO_2		For Use On Existing Systems	1
Red Mud	Krupp	Pilot Plant	Red Mud From Al Processing	Sludge			1
	Mitsubishi	Pilot Plant	Red Mud			Limited Application, Need Al Source	1
Sea Water Scrubbing	Kanagawa	Pilot Plant	Sea Water			Must be Near Cheap Source of Water	1
	Univ. of Calif.	Laboratory	Sea Water				1
	Boliden	Pilot Plant (full scale to be built)	Sea Water				1
Sodium Carbonate	Lummus	None	Na_2CO_3 or $CaCO_3$	Sulfur		Combustion Engineering Claims Feasibility	2
Sodium Sulfite	Wellman-Lord	Full Scale (H_2SO_4 Plant)	Na_2SO_3	SO_2	200/2000		

Process Name	Developer	Development To Date	Raw Materials	Byproducts	Effluent Concentration ppm out/ppm in	Remarks	Eliminated in Screening
Sodium Sulfite-Zinc Oxide	Johnstone (patd)	Pilot Plant (1940's)	Na_2SO_3-$NaHSO_3$	$CaSO_4$, SO_2	150/3000	Removes Flyash	1
Solid Sorption, Dry	U.S. Bureau of Mines	Pilot Plant	H_2, CH_4	SO_2			1
	Esso & Babcock & Wilcox	Pilot Plant	H_2, CH_4	SO_2			1
	Houdry						1
	Shell Intern Research	Pilot Plant	H_2 or CH_4 or CO	Sulfur			
Solid Sorption, Uranium Dioxide	Brookhaven National Laboratories	Laboratory				50,000 ppm Complete Absorption	2
Unknown Processes	Universal Oil Products	Full Scale (Commonwealth Edison)		Sulfur			1
	United International Research	Bench Scale		H_2SO_4			1
Smelters							
Ammonium Sulfite, Sulfuric Acid	Cominco	Commercial	NH_3, H_2O, H_2SO_4	SO_2 SO_4 $(NH_4)_2SO_4$	150/3000		3
Ammonium Sulfite, Thermal Regeneration	Cominco		NH_3, H_2O	SO_2 SO_4 $(NH_4)_2SO_4$	150/3000	Used During WW II	1
Catalytic Oxidation	SNPA-Topsoe	Commercial		94% H_2SO_4	500-1000/17,000		1
Catalytic Reduction with Natural Gas	ASARCO	Obsolete	CH_4	S		Prototype of New Processes	1
	Texas Gulf Sulfur	Pilot Plant	CH_4	S			1
	Allied Chem. Canada, LTD	Commercial	CH_4	S		Details Not Public	1
Contact Sulfuric Process	Well Established, Widely Used	Commercial	H_2O	H_2SO_4		Not Suitable for Low SO_2 Concentration	1
Citrate Process	USBM	Pilot Plant	CH_4, Citric Acid	S	1200-2400/23,600		2
Dimethylaniline Absorption	ASARCO	Commercial		SO_2		Developed 25 Years Ago, 2 or 3 Units Operating	1
Reduction with Coke	Imperial Chem. Industries	Pilot Plant	Coke	S		Prior WW II	1

Process Name	Developer	Development To Date	Raw Materials	Byproducts	Effluent Concentration ppm out/ppm in	Remarks	Eliminated in Screening
Reduction with Coke	Boliden Co.	Commercial Prior WW II	Coke	S			1
Unknown Process	ASARCO & Phelps Dodge	Pilot Plant	Reducing Gas	S			1
Unknown Process	Inspiration Consolidated Copper/Golden Cycle Corp.	Pilot Plant		H_2SO_4			1
Sulfuric Acid Plants							
Aluminum Sulfate	Hardman-Holden Ltd	Commercial	Aluminum Sulfate $CaCO_3$	$CaSO_4$, SO_2		Corrosion Scaling	1
Catalytic Oxidation Process	USSR	Commercial	H_2O	H_2SO_4			1
Catalytic Oxidation, Char	Calgon	Lab Scale	H_2O	15% H_2SO_4			2
Solid Sorbent	Rohm & Haas	Lab Scale		SO_2	<100/	Ion Exchange Resin Absorbent	2
Kraft Paper Mills							
Caustic Scrubbing	Unknown	Unknown	White Liquor Caustic				1
Other Sulfur Containing Gases-Refineries							
Claus Unit Tail Gas, Catalytic	J. F. Pritchard	Pilot Plant					1
IFP Process	IFP	Commercial	H_2S	S	1500-2500/	CS_2 and COS Not Removed	1
Beavon Sulfur Removal Process	Ralph M. Parsons & Union Oil Co. of Calif.	Pilot Plant	Fuel Gas	H_2S		Removes CS_2, COS, Requires Additional H_2S Treatment	1
Direct Oxidation	Pan American Petroleum Corporation	Commercial	H_2S	S			1
Hydrogen Sulfide, Sulfur Dioxide Reaction-Claus Process	German	Commercial	H_2S	S			1
Scot	Shell	Commercial	Fuel Gas	H_2S	>250/		1
Others							
Aqueous Reduction	MRC	Laboratory	Reducing Agent	S		Adiabatic	2

Process Name	Developer	Development To Date	Raw Materials	Byproducts	Effluent Concentration ppm out/ppm in	Remarks	Eliminated in Screening
Double Alkali	FMC	Pilot Plant	Lime, Soda Ash	Sludge			3
	Envirotech		CaO, Na_2CO_3	Sludge			3
	GM		Lime, Soda Ash	Sludge			3
	Zurn Air Systems		Lime, Na_2CO_3	Sludge			3
	Chemico		Na Salt, $Ca(OH)_2$	Sludge			3
	A D. Little		Lime, Soda Ash	Sludge			3
	Kureha Chemical Industry Co.		Lime, Soda Ash	Sludge			3
	Showa Denko		Lime, Soda Ash	Sludge $CaSO_4$			3
Molecular Sieve	Union Carbide	Commercial		SO_2(1% vol)	15-25/3500		4

on each process available to us at the time. This information included control level achievable, state of development, location of the control process in the regeneration off-gas flow train, raw materials needed, products (wastes), marketability of products, space requirements, problems foreseen to achieve retrofit, economics, additional pollutants controlled, process reliability, and finally, applicability of the process for catcracker SO_2 emission control.

The manner in which some of this information was used to further narrow our search for the most feasible processes requires additional discussion, especially with respect to product marketability, process applicability, and reliability.

The product considered to have the best marketability at the present time is sulfur. If desulfurization were fully applied in all areas of industry, the amount of sulfur products produced could change the market situation drastically. However, sulfur products will probably always have some favorable properties for affecting its marketability, e.g., easy handling, storage, transportation, conversion to other sulfur products, etc. Products such as SO_2 and H_2S, although they are not readily marketed, can be converted to sulfur or sulfuric acid. Consequently, they were considered preferable to products such as $(NH_4)_2SO_4$.

The process applicability criterion was applied to determine whether the process can or cannot control the sulfur emissions to the level desired. In the sense used, process applicability included consideration of the integration of the process with a petroleum refinery. Important factors considered included process operating conditions and the ability and effectiveness in doing its job.

Finally, the process reliability criterion was used to determine how well a process can be applied to refinery FCC unit SO_x control, how well it compares with refinery operations, how easy it is to control and operate when SO_x concentration fluctuates, and how well the process has been demonstrated in these areas.

The second-level screening was done by classifying the processes according to their availability. Four categories were established: advanced first generation, first generation, near first generation, and second generation. Advanced first generation processes were those that are commercially available. First generation processes comprised those demonstrated in an advanced pilot plant stage. Near first generation processes were considered to be those that have been through advanced research and development and into the pilot plant stage. Second generation processes were those that are still in the bench experimental stage. When basically similar processes were at different levels of development, the less advanced ones were eliminated. During this screening, an additional 19 processes were eliminated, leaving 26 potential candidates. The remaining 26 have been classified according to their availability in Table 10.

The third-level screening, which preceded detailed evaluation of individual processes, was based on the form in which the sulfur value is recovered. The possible products in order of decreasing desirability are sulfur, H_2S or SO_2, ammonium sulfate or sulfuric acid, and a sludge for land disposal. Because of limited land availability in and around most refineries, nonregenerable sludge-producing sulfur removal processes are not desirable. Those products for which there is a limited market, dilute H_2SO_4 and $(NH_4)_2SO_4$, are lowest in desirability among the saleable by-products H_2S and SO_2 are more desirable since they can be used to produce

Table 10. FLUE GAS DESULFURIZATION PROCESSES AFTER CLASSIFICATION ACCORDING TO THEIR AVAILABILITY

Process Name	Developer	Product
Advanced First Generation		
Ammonium Sulfite	Consolidated Mining Co.	SO_2
CAT-OX	Monsanto	H_2SO_4 (78%)
Caustic Scrubbing	General Motors	Na_2SO_4 discharge
Char, wet	Lurgi (Germany)	H_2SO_4 (25%)
Molecular Sieve	Union Carbide	SO_2
Sodium Sulfite	Wellman-Lord	SO_2
First Generation		
Ammonia Scrubbing	TVA	SO_2;H_2SO_4;$(NH_4)_2SO_4$
Ammonia Scrubbing	Hixson	SO_2
	Shell	H_2S
Double Alkali	A. D. Little	Sludge
	Chemico	Sludge
	Envirotech	Sludge
	FMC	Sludge
	GM	Sludge
	Kureha Chemical Co.	Sludge
	Zurn Air Systems	Sludge
Lime/Limestone Scrubbing	Commonwealth Edison	Sludge
	Bischoff	Sludge
	Mitsubishi	Sludge
	TVA	Sludge
	APCO/Key West, Fla.	Sludge
Magnesium Oxide Scrubbing	Chemical Construction Co.	SO_2
Near First Generation		
Ammonia Scrubbing	Mitsubishi	$(NH_4)_2SO_4$
Calsox	Monsanto	Sludge
Char, dry	Westvaco	Sulfur
Manganese Oxide	Mitsubishi	$(NH_4)_2SO_4$

either concentrated sulfuric acid or elemental sulfur. Similarly, by-product sulfur is the most desirable product because of its convenient form and its marketability as a raw material. Twenty processes were eliminated because they produce the less desirable by-products, leaving six candidates for detailed evaluation. The six candidates are representative of three distinct categories: scrubbing systems, adsorbing systems, and oxidation systems.

The three potential candidate adsorbent/absorbent systems are processes by Westvaco (two alternatives), Shell, and Union Carbide. The two scrubbing systems remaining are the Wellman-Lord process and magnesium oxide scrubbing. The sixth process is the Monsanto Company CAT-OX® process, which is based on catalytic oxidation. The complete description of these processes, including process economic evaluations, is presented in Section 6.4. The applicability of each of the remaining candidates to catalytic cracking flue gas SO_x cleanup is included in the discussion. Process availability, process description and chemistry, applicability to catcracker off-gas, physical size requirements, possible experimental work required, additional pollutants controlled, and economics are also discussed.

The final, fourth-level screening was based on comparison of the technical soundness and economics of the six processes. After this comprehensive technical and economic evaluation, three processes remained: the Westvaco, the Shell and the Wellman-Lord processes.

6.3 GENERAL CONSIDERATIONS IN EVALUATION OF THE SELECTED PROCESSES

6.3.1 Technical Evaluations

Most of the data for the control processes selected have been obtained and are based upon burning 3.0-3.5% sulfur coal in a

power generation unit. This concentration corresponds to an SO_2 flue gas concentration of 2000-2500 ppm. In our study we have assumed that the regenerator off-gas sulfur concentration will be 2000 ppm. This concentration, of course, can be diluted by up to 30% due to additional volume introduced from combustion in a CO boiler, assuming that no additional sulfur oxides will result from the combustion of CO boiler supplemental fuel.

There are several operating schemes possible downstream from the FCC regenerator. These can lead to alternatives for integration of an add-on desulfurization system with the existing equipment. The off-gases leaving the regenerator contain a reducing atmosphere with high concentrations of carbon monoxide and a very low oxygen concentration. Additionally, the gases carry catalyst particulates. The heat of the carbon monoxide oxidation reaction can be recovered through its controlled combustion in the CO boiler.

Obviously, several possibilities appear for integration of a specific add-on process with existing refinery equipment. The reducing atmosphere can become very favorable for some of the processes, especially those in which extensive oxidation of sulfur dioxide to sulfur trioxide is undesirable. This oxidation occurring in an oxidizing atmosphere often results in arduous operating problems, increased consumption of chemical reactants, more difficult if not impossible regeneration, and increased operating cost. Scrubber systems would fall into this category of processes. On the other hand, for some processes an oxidizing atmosphere and presence of oxygen is essential for successful process operations. Alternative process locations for each of the six processes selected are proposed and evaluated in appropriate sections discussing each process.

In some applications of fluid catalytic cracking the regenerator flue gas contains a relatively high fraction of sulfur trioxide compared to the total concentration of sulfur oxides present in the stream. Variations of the SO_3-to-SO_2 ratio have been reported, with the percentage of sulfur oxides as SO_3 ranging from 10 to 60%.[2,3,92] Some investigators feel that the SO_3 is produced by the oxidation of SO_2 in the flue gas at elevated temperature, catalyzed by metals (vanadium, nickel, iron) deposited on the cracking catalyst. Equilibrium calculations, however, show that only 29% of SO_2 can be converted to SO_3 in a stream at 1200°F containing 1000 ppm SO_2 and 0.7% oxygen.[92] If the oxygen level is 20%, the amount of SO_2 converted will be 65%. The metals suspected to catalyze the oxidation of sulfur dioxide originate in the FCC feed and are deposited on the catalyst in relatively high concentrations without poisoning the catalyst. The presence of large amounts of SO_3 in the treated gases may have a detrimental effect on the operation of many of the available flue gas desulfurization processes with results similar to those caused by the presence of an oxidizing atmosphere, which has been already discussed.

As was indicated previously, the gases from the regenerator also contain catalyst fines. Chemically, the catalyst composition is very different from that of fly ash emitted from stationary sources. The effect of catalyst fines on the add-on system operation has not been previously determined and should be fully investigated if any of the add-on processes are applied to desulfurization of FCC regenerator flue gas. Obviously, if the process is applied after the electrostatic precipitator, the effects of catalyst fines may be minimized. Even if the potential change of catalyst fines properties due to their passing through the CO boiler is neglected, the effect of the fines on an add-on

system may be different in a reducing and oxidizing atmosphere. It should be realized that the effects of catalyst fines on a specific process may vary with the type of crude oil processed and type of catalyst used by a specific refinery.

Effects of potential by-products within a process ought not to be overlooked either. In addition to the chemical effects of the catalyst particulates on a specific add-on process, some physical effects may also result. The catalyst fines may cause plugging problems and consequently some operating difficulties. They can accumulate in process equipment and streams requiring their occasional removal, increased maintenance cost, and in scrubber systems, increased consumption of scrubbing media. Scrubber systems, on the other hand, could become a means of very efficient particulate emission control and possibly replace electrostatic precipitators.

The regenerator effluent gases leave the regenerator at much higher temperatures than those usually existing in power plants. Depending on the specific process operating temperature, this may require more or less gas cooling before the gas enters the actual process, and will have some effect on process economics. The flue gas leaving the CO boiler, however, is much more within the range of add-on process operating temperatures. Additionally, scrubber systems will require a reheat of the processed gases to reduce steam plume formation after the stream is discharged to the atmosphere.

The effect of the variation of flue gas composition on the control process chemistry and unit operations requires additional laboratory investigation. Also, the effects of the high level of SO_3, the limited level of O_2, the presence of high CO content, and

presence of other compounds as indicated in Table 7 would have to be experimentally determined for each of the processes.

6.3.2 Economic Evaluation

The general assumptions required for the economic analyses of the add-on processes have been presented in Section 3.5. Additional assumptions required for a specific process are given with the discussion of each process. Most of the economic evaluations for add-on systems have been correlated with megawatt output of a power plant. In order to apply these data to our study, a need appeared to convert the power plant megawatt output to volume of the flue gas treated by a specific add-on process. This conversion has been assumed to be 2000 scfm/MW.

All of the add-on processes selected [except Monsanto Company's CAT-OX and the Westvaco process (second alternative)] produce a concentrated SO_2 stream. This stream, it was assumed, will be fed to the Claus plant. For estimation of the additional cost credited to the gas treatment in the Claus plant, the twenty-third assumption in Section 3.5.2 was applied. The results obtained from applying this assumption are included in our detailed cost estimates and they were included in the total operating cost estimates.

Flue gas desulfurization costs are affected principally by capacity, SO_2 content, level of desulfurization, and availability of required outside services. Different SO_2 concentrations would change the economics to some extent. We have arbitrarily set the regenerator flue gas SO_2 level at 2000 ppm with a 90% reduction by the add-on systems (i.e., to 200 ppm). These criteria will affect the operating costs with regard to raw material requirements, but since no credit has been taken for

sulfur recovered, the effect of SO_2 level on the operating cost is minimized. Since the capital equipment is based on volume treated and not sulfur removed, the required capital investment for the removal unit will also be minimally affected by SO_2 effluent concentration. However, lower concentrations of SO_2 will require smaller regeneration units and consequently lower capital investment.

The values obtained for capital investment were modified where necessary to fit the application to catcracking flue gases. Frequently, heat exchange equipment was required to tailor the flue gas to the SO_x removal process. In all cases the most recent information available was utilized and where necessary updated using the CE index. If values for this index did not accompany the data, a value for the year in which the publication appeared was assumed.

The operating cost for the add-on systems has been expressed in terms of mills/cu ft of treated flue gas. To compare the add-on systems to the other two alternatives, the values for operating cost of the add-on systems must be expressed in cents per barrel of catcracker feed. To obtain these values, the catcracker operations were assumed to yield 3 scfm of flue gas per barrel per day of fresh feed. The corresponding cost for a different flue gas rate can be obtained by inserting the value acquired from the operating cost graphs of each process in the following equation:

$$\text{Cost (cents per barrel)} = \text{Cost (mills/cu ft)} \times 144 \times \frac{\text{scfm}}{\text{bpd}} \qquad (2)$$

6.4 ADSORBENT/ABSORBENT SYSTEMS

Three add-on processes remained in this category and have been evaluated. Each of the processes utilizes a solid acceptor that

collects the SO_2. The acceptor is subsequently regenerated and reused. The product of all three processes is a concentrated stream of SO_2, although the mechanism for obtaining the stream differs for each process. The concentrated sulfur dioxide stream is assumed to be fed to the Claus plant.

The Westvaco process adsorbs SO_2 on a carbon acceptor as sulfuric acid, which is subsequently converted to SO_2 with a reducing gas. This process can be modified to directly produce sulfur or to wash the carbon acceptor and produce dilute sulfuric acid. Since sulfur is the product considered most desirable, the process has been evaluated in two alternatives, the first producing SO_2 and the second producing sulfur.

The Shell Flue Gas Desulfurization (SFGD) process absorbs the SO_2 as $CuSO_4$ which is later reduced to Cu and SO_2 with hydrogen. The Union Carbide PuraSiv-S process adsorbs the SO_2 on molecular sieve and recovers the SO_2 thermally.

6.4.1 Westvaco Process

Both alternatives of this process have been developed by Westvaco Corporation, Research Center, N. Charleston, South Carolina.

Westvaco has been developing its SO_2 recovery process in both bench scale and fluid bed pilot equipment. Initial feasibility tests were conducted in small fixed bed reactors to determine the most effective carbon for SO_2 removal and to evolve the regeneration sequence for minimum carbon loss. Continuous operation of the various process steps was evaluated under simulated conditions in fluidized-bed pilot equipment.

Removal of SO_2 from actual boiler flue gas was first tested in a 1,500 cfh, 6-inch diameter unit operating on a slipstream from a 50 MW oil-fired boiler. This equipment was operated satisfactorily for continuous periods of up to one week. Scaled-up 18-inch diameter adsorbers, capable of handling gas rates of 20,000 cfh, also have been operated satisfactorily on flue gas from an oil-fired boiler and on simulated Claus tail gas. Data from these continuous units showed SO_2 removal capabilities down to the 50 ppm range.

6.4.1.1 SO_2 Production Process Description

A simplified block flowsheet of the process for treatment of FCC regenerator waste gas is shown in Figure 16. The FCC waste gas is cooled, oxygen is added and the gas is contacted with activated carbon in a SO_2 sorber. In the sorber activated carbon catalyzes the conversion of SO_2 to sulfuric acid by the reaction:

$$SO_2 + 1/2\ O_2 + H_2O \longrightarrow H_2SO_4 \qquad (3)$$

The conversion occurs within the pores of the activated carbon and the acid formed remains sorbed within the activated carbon. Recoveries of SO_2 greater than 90% are readily achieved from gases with concentrations similar to those emitted from FCC regenerator.

Acid laden carbon flows continuously from the sorber and passes to the regenerator where it is contacted with H_2S from the refinery to form SO_2 by the following reactions (4-a) and (4-b). These two reactions can be combined and yield reaction (5).

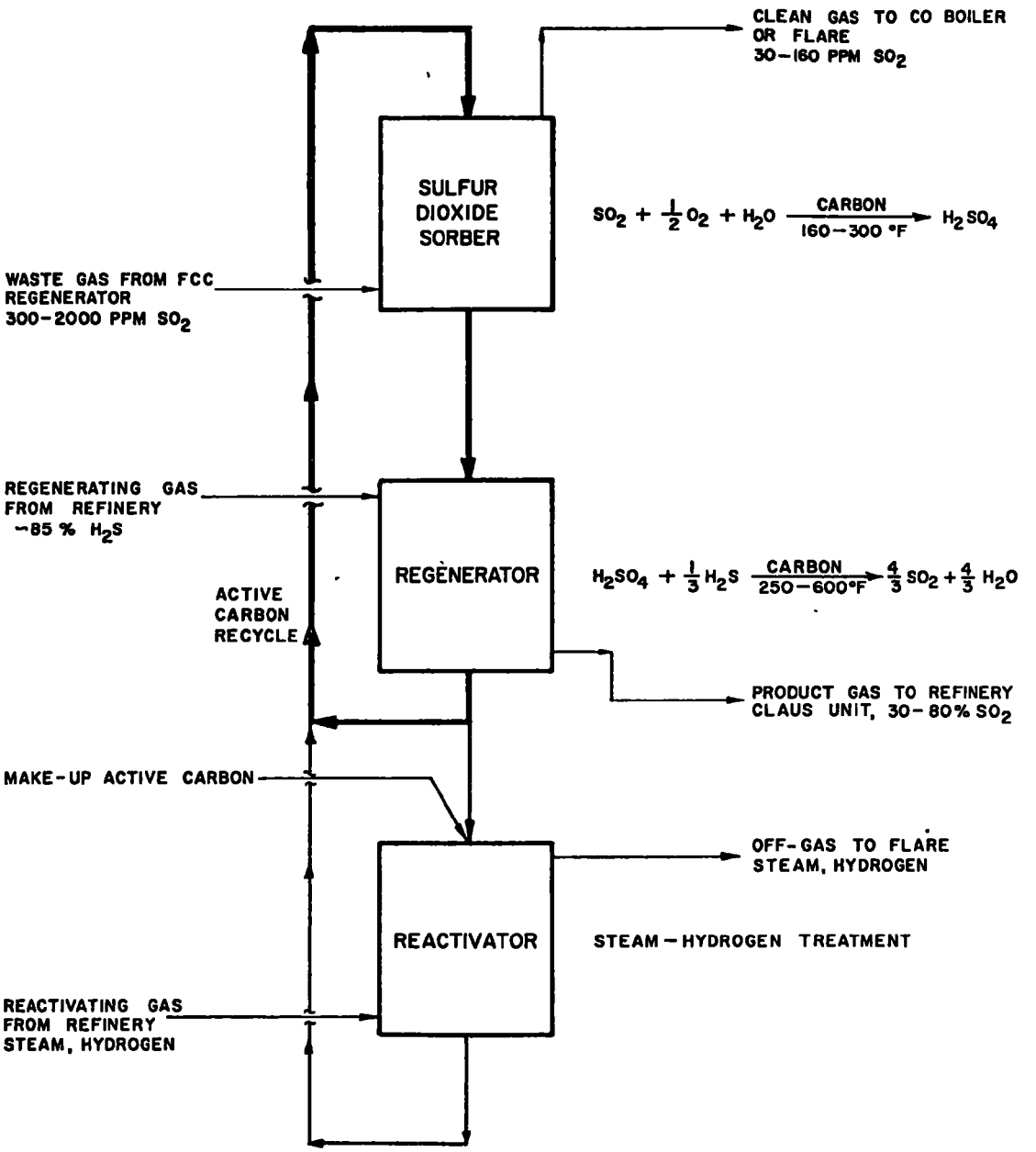

Figure 16. Westvaco Process - FCC Regenerator Waste Gas Treatment, SO_2 Production

$$1/9\ H_2SO_4 + 1/3\ H_2S \longrightarrow 4/9\ S + 4/9\ H_2O \qquad (4\text{-a})$$

$$8/9\ H_2SO_4 + 4/9\ S \longrightarrow 4/3\ SO_2 + 8/9\ H_2O \qquad (4\text{-b})$$

$$H_2SO_4 + 1/3\ H_2S \longrightarrow 4/3\ SO_2 + 4/3\ H_2O \qquad (5)$$

Off-gas from the regenerator will contain 30-35% SO_2 with an H_2S feed of 85%. If more concentrated SO_2 is required as product, a condenser can be added to remove water vapor and increase the concentration to 80-90% SO_2.

After being regenerated the carbon stream is split with 80% being sent back to the SO_2 sorber and 20% to a reactivator. In the reactivator the carbon is treated with steam and hydrogen to remove any buildup of chemisorbed oxygen or sulfur which lowers the carbon's activity. Off-gas from the reactivator is sent to a flare or the CO boiler.

The conceptual design flowsheet for FCC application proposed by the Westvaco is shown in Figure 17, and includes stream compositions and energy balance of the process.

The FCC regenerator waste gas, stream 11, is received from the refinery at 1100°F at a rate of 30,000 scfm. A part of the gas is used in the shell side of the Westvaco regenerator to supply process heat and the remainder is cooled to 500°F in a waste heater boiler (C-101) which generates 20,000 lb/hr of 15 psig steam, 22, for export. The waste gas, cooled to 500°F, is mixed with air, 21, to raise the oxygen concentration to 3.3%, 3, and then contacted with activated carbon in a 5-stage, fluid bed SO_2 sorber (E-101). In the SO_2 sorber, which is 15.6 in. dia. x 30 ft long, the SO_2 is converted to sulfuric acid, which remains adsorbed on the activated carbon. Water, 19, sprayed into the fluidized activated carbon evaporates to maintain the desired temperature in the

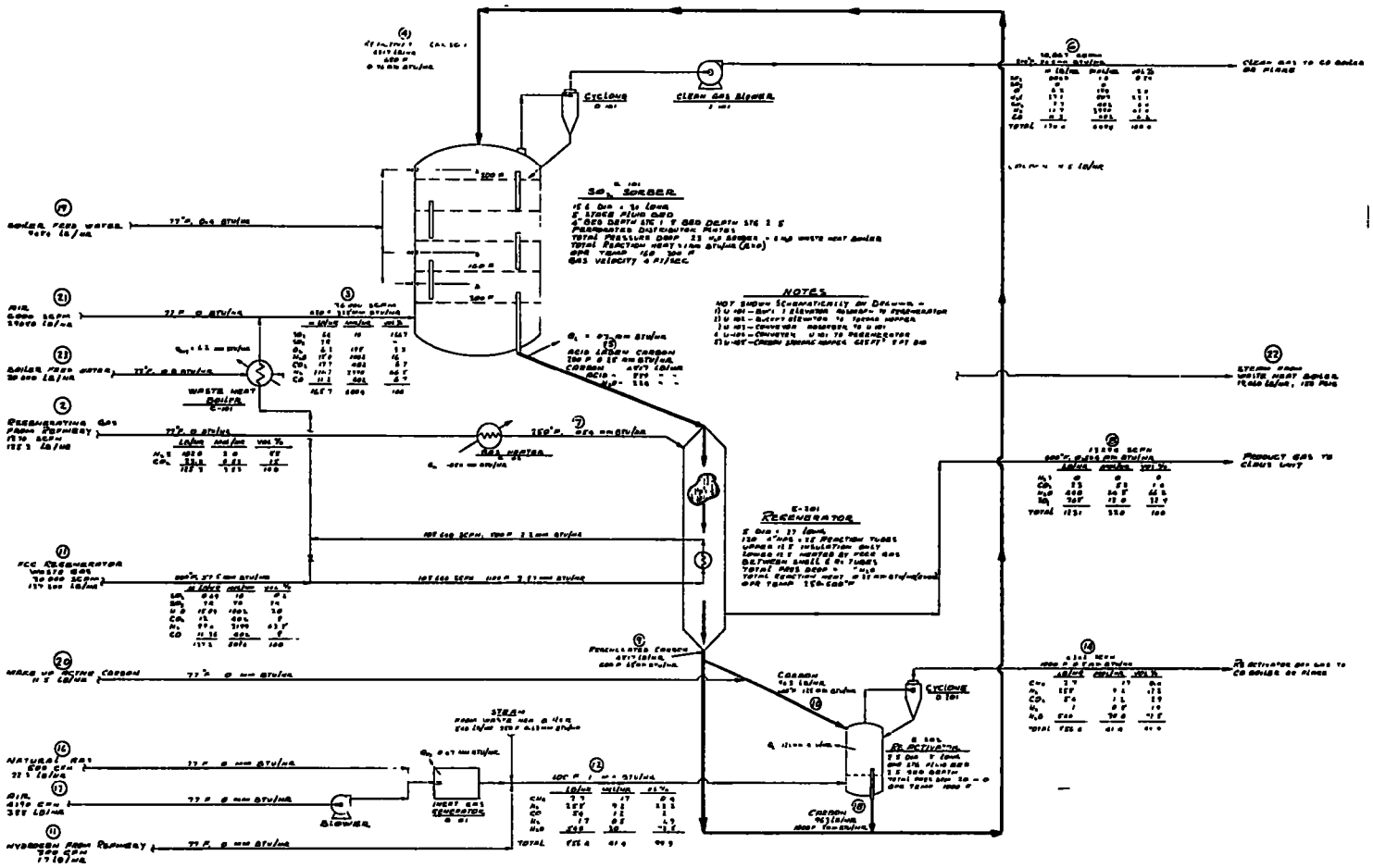

Figure 17. Westvaco Process - FCC Regenerator Waste Gas Treatment, Conceptual Design Flowsheet

reactor. The reactor bottom stage is kept at 300°F, below the SO_3 dew point, until SO_3 is removed. In the upper stages the temperature is lowered to 160-200°F for efficient SO_2 removal. After 90% SO_2 removal, carbon carry-over is removed in a cyclone (D-101) and returned to the SO_2 sorber. Pressure drop requirements are supplied by a blower (J-101) downstream of the sorber and the clean gas, 6, is sent to a flare or CO boiler depending on the refinery.

The acid-laden carbon from the SO_2 sorber is transported to the 5 ft dia. x 36 ft moving bed regenerator (E-201) by a conveyor and bucket elevator. Here, the carbon is contacted co-currently in 120 four-inch reaction tubes with H_2S-laden gas supplied from the refinery, 2. The reaction of H_2S and sorbed acid produce a stream of 32% SO_2, 8, which is returned to the refinery Claus plant. Heat to raise the carbon temperature from 250 to 600°F and to supply the heat of reaction is obtained by indirect heat exchange with a portion of the FCC regenerator flue gas.

Upon leaving the regenerator the carbon stream, 9, is split, 80% is returned directly to the SO_2 sorber and the remaining 20% is treated with a hydrogen-steam mixture, 12, to remove trace substances which might deactivate the carbon. The reactivator (E-202) is a 2.5 ft dia. x 8 ft long single-stage fluid bed unit operating at 1000°F. Both regenerated and reactivated carbons, 4, are reintroduced directly into the top stage of the SO_2 sorber. The reactivator off-gas, 14, is sent to a flare or CO boiler.

Carbon makeup, 20, is supplied at a rate of 11.5 lb/hr from an 8 ft diameter storage vessel capable of holding about 15 tons of carbon.

Raw Materials and Chemicals

1. Process water for waste heat recovery
2. Activated carbon
3. Hydrogen
4. Hydrogen sulfide
5. Fuel gas

Physical Size Requirements (Figure 18)

30,000 scfm unit
38 ft x 38 ft x 110 ft

150,000 scfm unit
85 ft x 85 ft x 110 ft

Location in Regenerator Downstream Flow Train

Immediately after regenerator

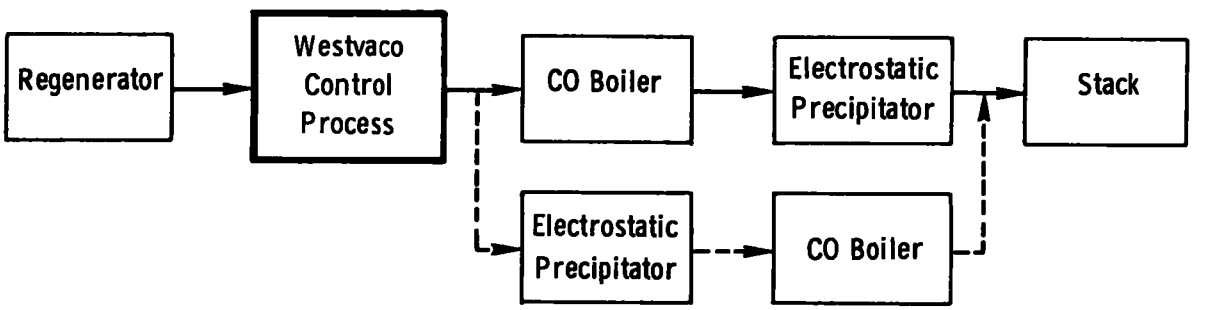

6.4.1.2 Sulfur Production - Process Description

Conceptual Design

A simplified process flowsheet of the Westvaco process in which sulfur is produced as by-product is shown in Figure 19. Plot areas would be similar to those presented in Figure 18.

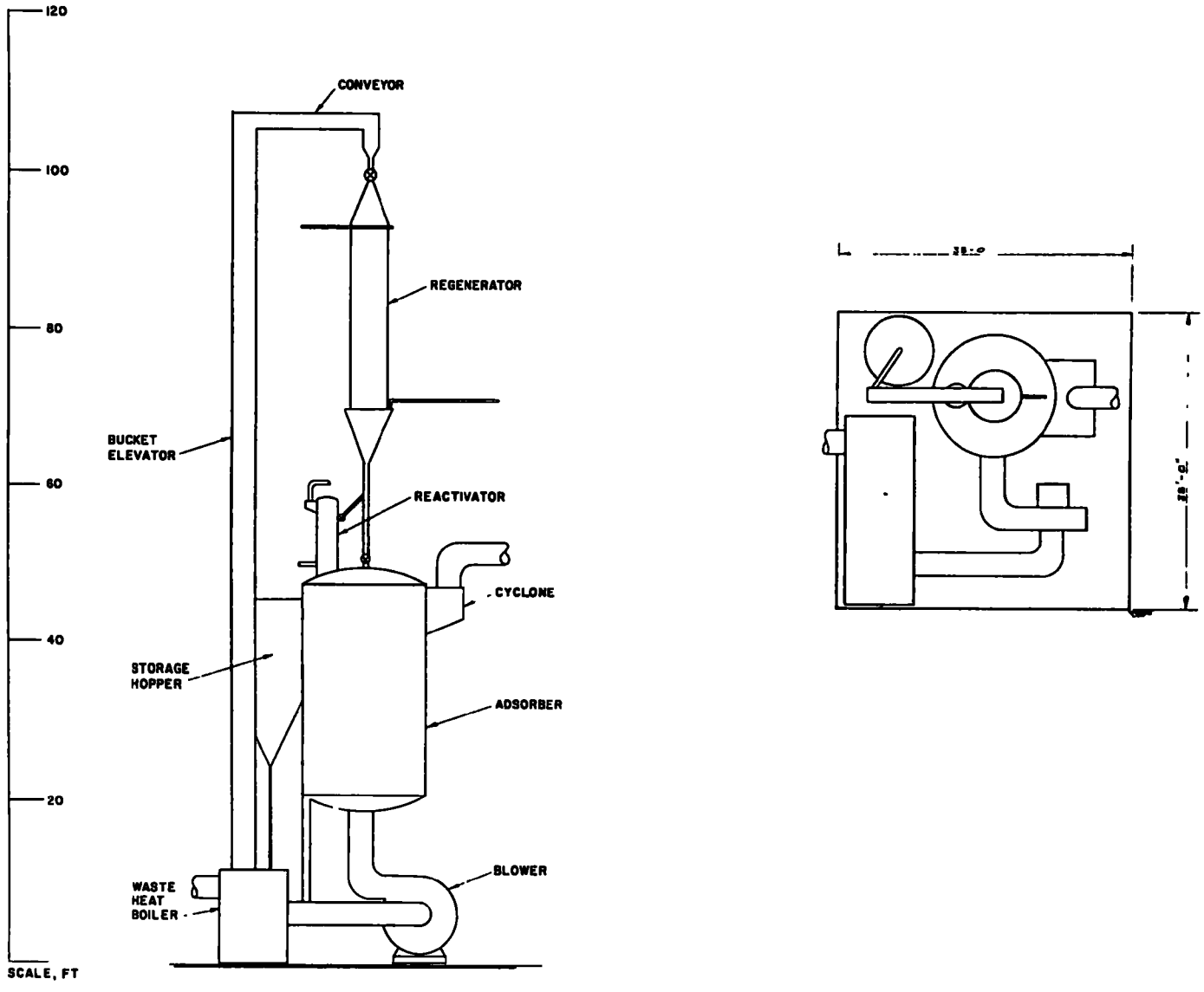

Figure 18. Westvaco Process - FCC Regenerator Waste Gas Treatment, Elevation and Plot Plan

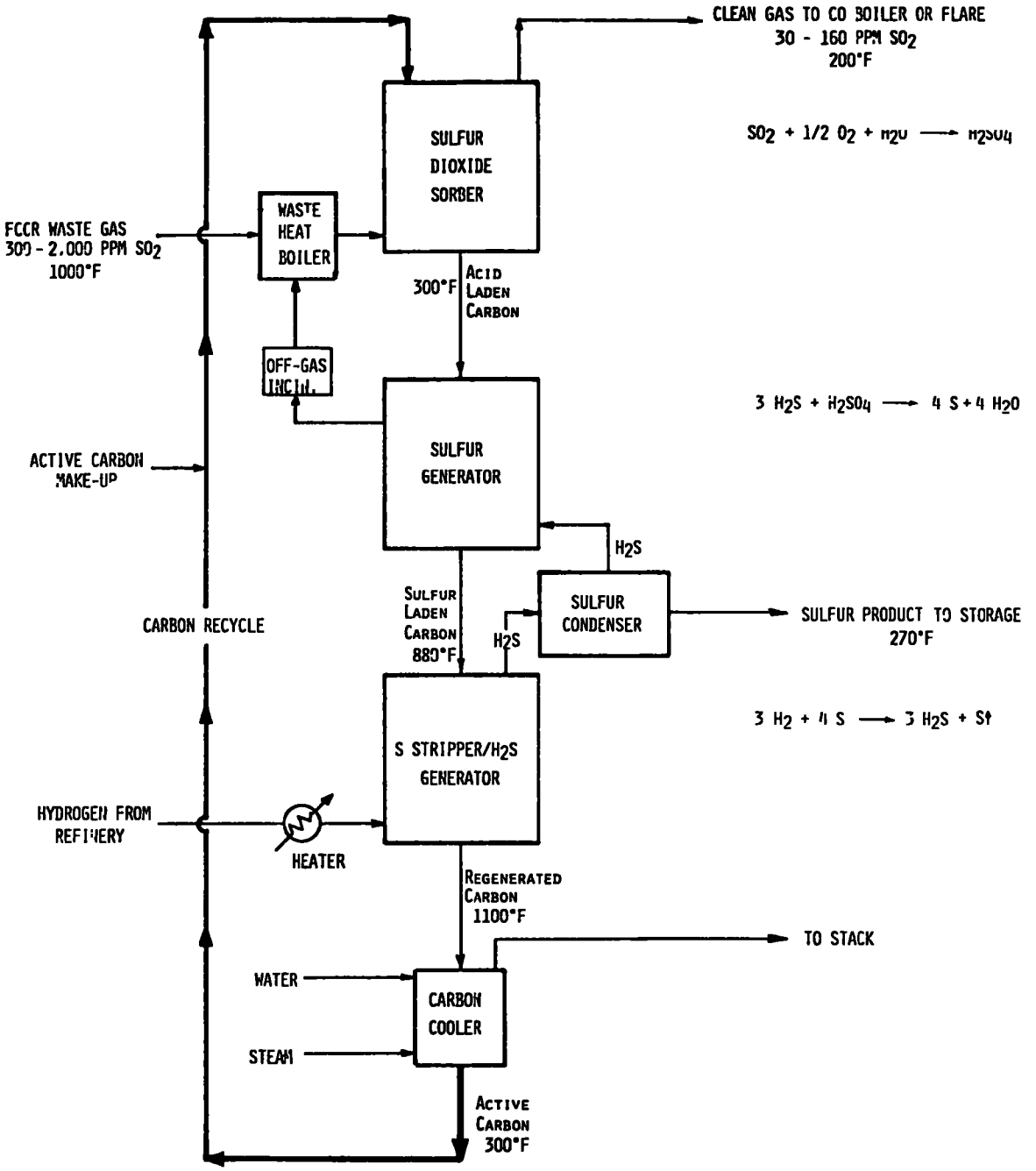

Figure 19. Westvaco Process - FCC Regenerator Waste Gas Treatment, Sulfur Production

Waste gas from the FCC regenerator unit at 1000°F is cooled in a waste heat boiler to 500°F prior to SO_2 removal. Process steam (150 psig) produced in the boiler is exported to the refinery. Air (not shown) is added to the cooled FCC regenerator waste gas and the gas is contacted with activated carbon in a 15.5 ft diameter, 5-stage fluid bed for SO_2 removal. Greater than 90% of inlet SO_2 is converted to H_2SO_4 and sorbed on the activated carbon according to the following reaction:

$$SO_2 + 1/2\ O_2 + H_2O \xrightarrow[\text{Carbon}]{\text{Active}} H_2SO_4. \qquad (6)$$

Acid laden carbon from the SO_2 sorber is then contacted with H_2S in a 6 ft dia. x 25 ft moving bed reactor containing 200 four-inch diameter reaction tubes. In the upper half of the reactor (Sulfur Generator) acid is converted to sulfur at 300°F by the reaction,

$$3\ H_2S + H_2SO_4 \longrightarrow 4\ S + 4\ H_2O. \qquad (7)$$

Normally, in this reaction conversion of acid to sulfur approaches 99% and H_2S utilization is greater than 95%. In order to insure that no H_2S leaves the process, the off-gas from the sulfur generator is burned in an incinerator and the incinerated gas is added to the FCC regenerator waste gases entering the SO_2 sorber. The lower part of the sulfur generator serves to preheat the carbon to 880°F by indirect heat exchange with a small part of the FCC regenerator waste gas prior to sulfur recovery.

The hot, sulfur-laden carbon is then contacted with 30% hydrogen from the refinery in a 4.25 ft diameter, 8-stage fluid bed unit. Three-fourths of the sulfur is converted to H_2S and one-fourth is vaporized by the hot gases, i.e.

$$3\ H_2 + 4\ S \longrightarrow 3\ H_2S + S\uparrow. \qquad (8)$$

The sulfur product is recovered in a conventional condenser such as is used in a Claus plant and the H_2S gas stream proceeds to the sulfur generator. Thus the H_2S forms an internal recycle loop within the process. If H_2S is available at the refinery, this step is not required and process costs are reduced.

Raw Materials and Chemicals

1. Process water
2. Activated carbon
3. Hydrogen
4. Fuel gas

Physical Size Requirements

30,000 scfm unit
38 ft x 38 ft x 110 ft
150,000 scfm unit
85 ft x 85 ft x 110 ft

Location in Regenerator Downstream Flow Train

Immediately after regenerator

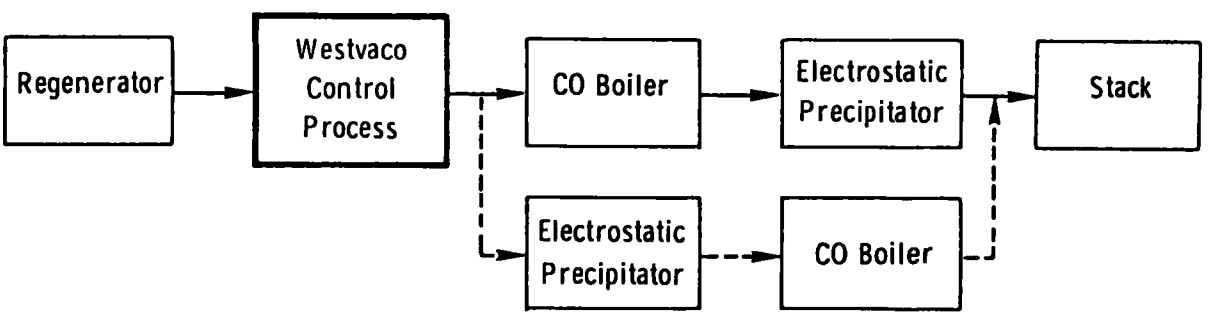

6.4.1.3 Experimentation Needed and Proposed by Westvaco

a. Current Status

Development of the Westvaco process has reached the 20,000 cfh pilot level. Emphasis to date has been upon removal of SO_2 from power boiler flue gases with the production of sulfur. With support from EPA all of the process steps have been successfully tested separately at the 20,000 cfh level. Mechanical integration of the pilot plant is just being completed preparatory to long-term cycling tests on flue gas from an oil-fired boiler. The pilot plant is well instrumented for data acquisition to evaluate process operation.

b. Development for FCC Regenerator Waste Gas

The Westvaco process seems well suited for application to FCC regenerator waste gases. The gas composition is similar to streams on which Westvaco extensive SO_2 removal work has been done on the laboratory and 20,000 cfh pilot levels. In addition, availability of H_2S and hydrogen at the refinery for the production of sulfur or sulfur dioxide greatly simplifies the process.

Westvaco feels that the process could be readily scaled from the current pilot scale to 30,000 cfm FCC regenerator waste gas treatment. Only minor modifications would be needed to current pilot equipment to evaluate the FCC regenerator waste gas treatment application.

The schedule for the 30,000 cfm process demonstration program proposed by Westvaco is shown in Figure 20. The proposed 16 month schedule assumes that rapid development is needed and that the initial three phases,

1) pilot evaluation of FCC regenerator waste gas treatment,

2) preparation of process design specifications for 30,000 cfm demonstration, and

3) preliminary design of 30,000 cfm demonstration unit,

would be in progress simultaneously. Presently, sufficient pilot information is available to begin preparation of process specifications and to prepare preliminary designs. Evaluation of FCC regenerator waste gas treatment in the current pilot plant would be used to confirm process applicability and firm up the final design data.

6.4.1.4 Economics

Capital cost requirements and operating expenses are based on an evaluation of data provided by Westvaco.[94] Values of required capital investment and operating cost obtained for application to FCC off-gases appear graphically in Figures 21 and 22. Included in these figures are values for both SO_2 production and direct sulfur production. Detailed operating cost estimates appear in Appendix F, Tables F1, F2, F3, F4, F5, and F6.

Additional assumptions used in cost estimates for this process include:

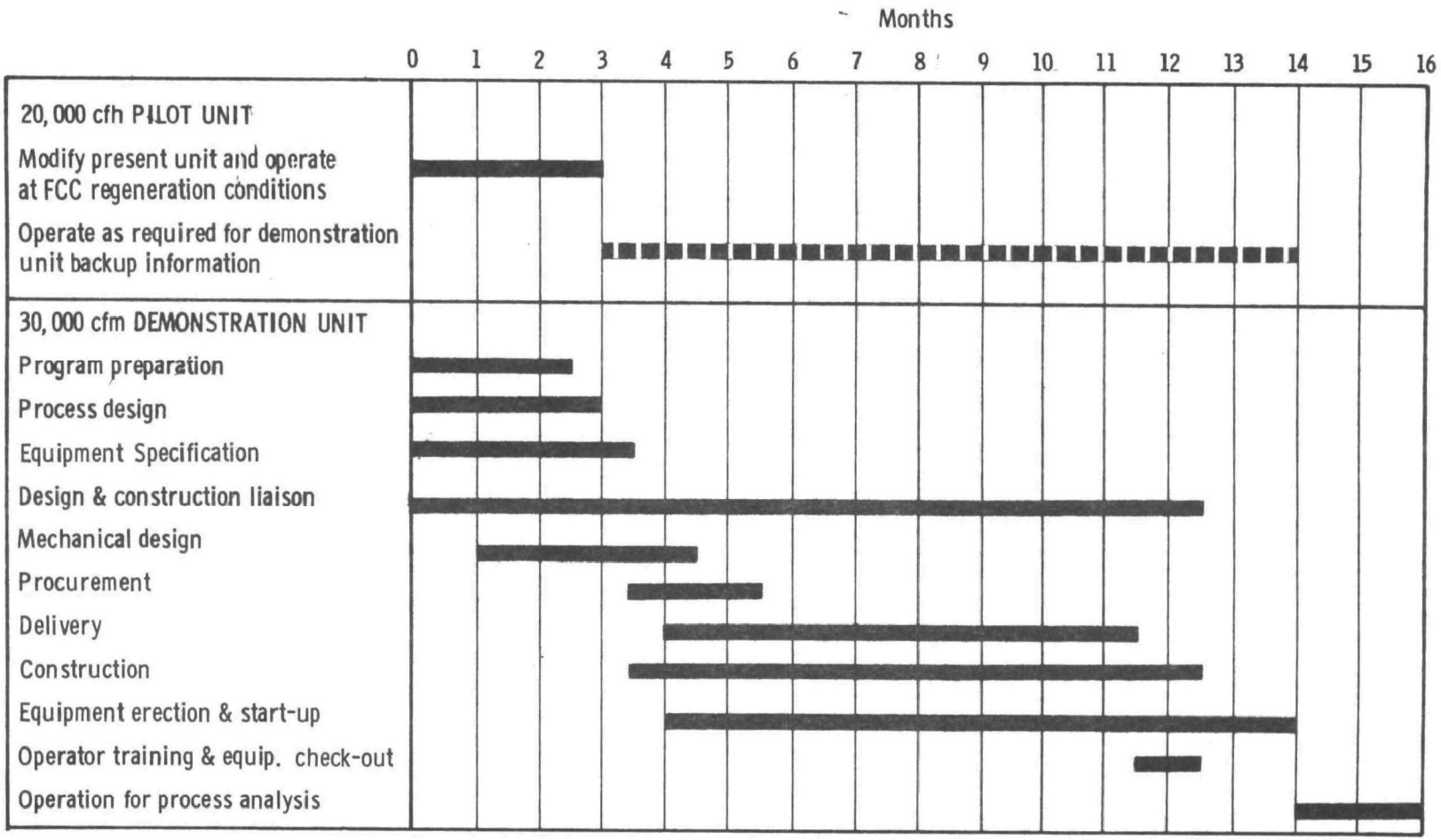

Figure 20. Westvaco Process - FCC Regenerator Waste Gas Treatment, Pilot Plant Program Schedule

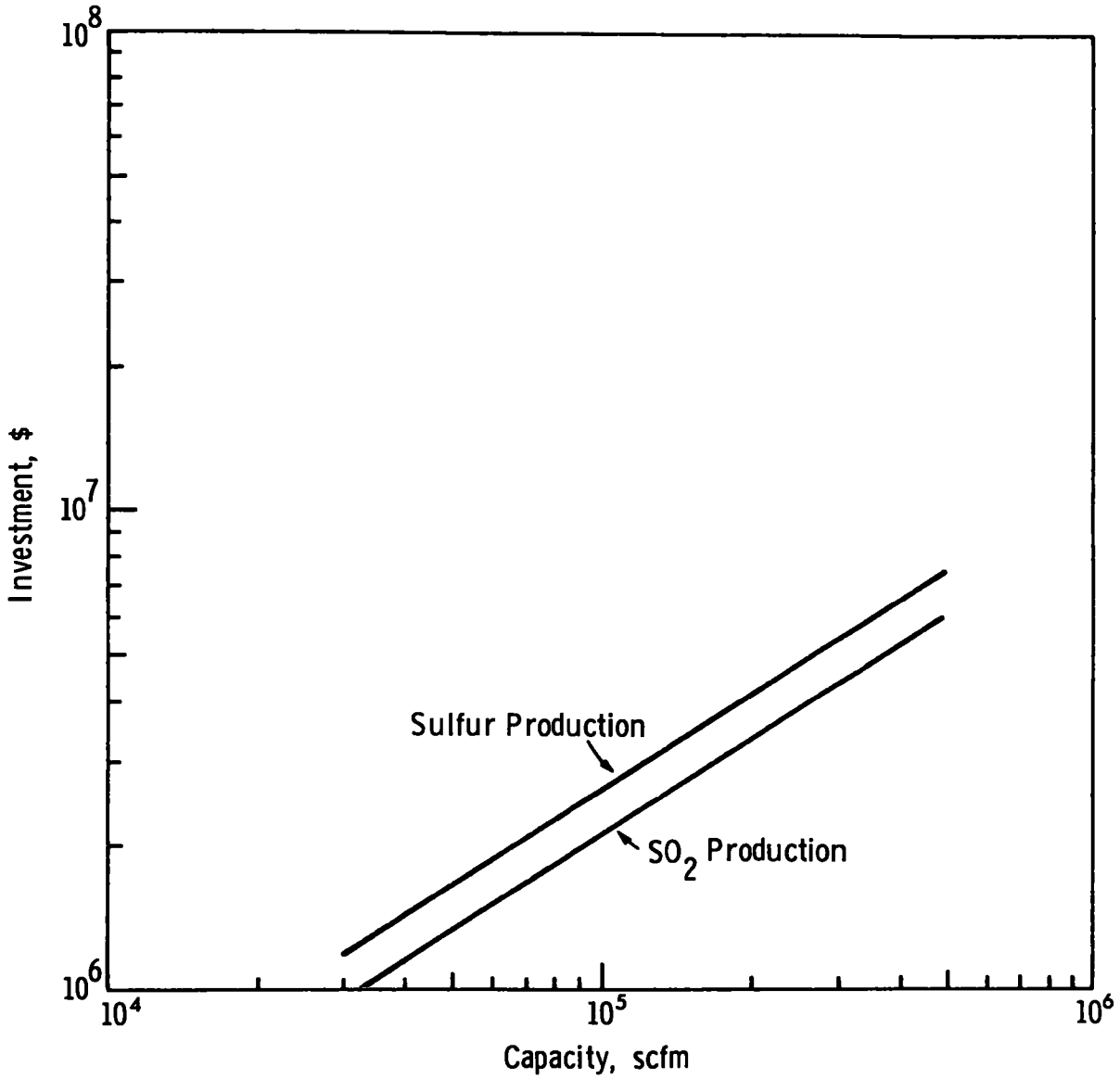

Figure 21. Westvaco Capital Investment Cost (February 1973)

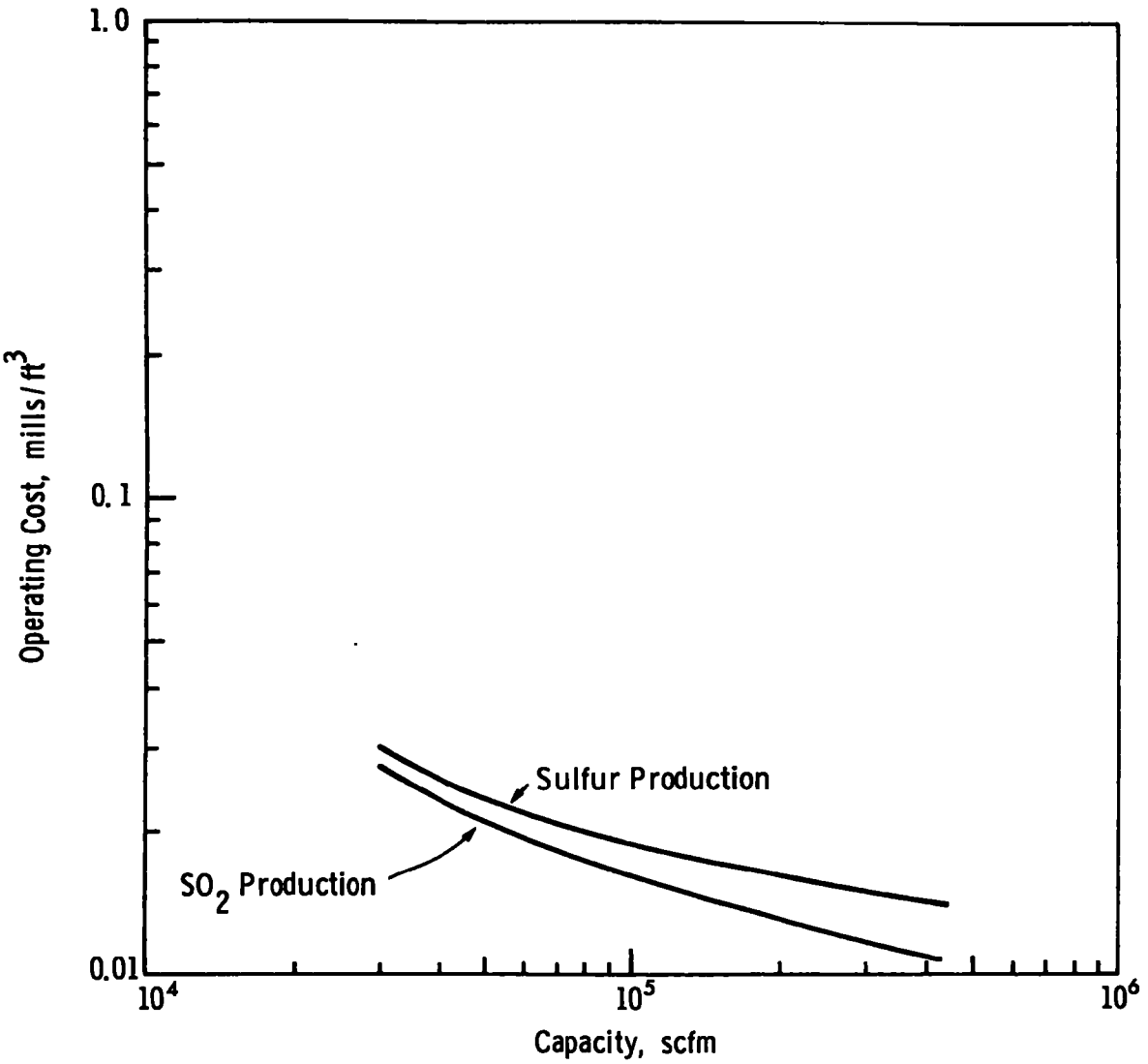

Figure 22. Westvaco Operating Cost

Carbon cost $0.25/lb
H_2S cost $20/ton of sulfur
Carbon lifetime - 1/2 year
Operating labor - 1 man/shift

6.4.1.5 Comments

The Westvaco process seems to be a very attractive option for the refinery FCC regenerator off-gas desulfurization. The company is actively working on the process, has previously considered the FCC application, and has not found any major technical drawbacks. The process includes basic unit operations that are common in chemical industry and consequently would not introduce anything new or "unfamiliar" to the petroleum refiners. The fact that the process can produce three of the sulfur products (SO_2, S, or H_2SO_4) would offer refineries advantageous flexibility in integration of the process with existing facilities as well as future expansion plans. No additional materials that are not already handled by the refineries are required for the process operation.

The process will probably operate well when sulfur concentration fluctuates as well as in the presence of sulfur trioxide. However, process operation and reliability under existing regenerator off-gas conditions will have to be fully tested. Specifically, the process operation in a reducing atmosphere would have to be determined and evaluated. Although the presence of particulates is not expected to cause any serious problems, their effects should also be tested. The process could be applied to gases leaving the CO boiler as well. However, higher capital and operating cost may be expected due to the regenerator off-gas dilution in the CO boiler.

6.4.2 Shell Flue Gas Desulfurization Process

This process has been developed by the Shell International Research, Netherlands, and is presently licensed by Universal Oil Products, Des Plaines, Illinois.

A 300-600 scfm pilot plant began operation in 1967 at the Pernis refinery in the Netherlands. The first full-scale unit is being constructed at the Showa Yokkaichi Sekiyu refinery in Japan, with scheduled start-up this year (1973).

6.4.2.1 Process Description

The Shell Flue Gas Desulfurization (SFGD) process uses a dry acceptor in a static packed bed to accept SO_2 from gaseous streams. The acceptor mass, contained in two or more identical reactors, is subjected to successive stages of acceptance and regeneration at approximately the same temperature. The net effect is that SO_2, free of oxygen and particulates, is obtained concomitant with the required degree of gas desulfurization.

Figure 23 is a simplified illustration of the SFGD process equipment arrangement. The SO_2-rich gas passes through the acceptance reactor(s) for typically 45-60 minutes, until the cumulative slip (breakthrough) of SO_2 into the treated gas has reached a designated SO_2 concentration. The SO_2-rich gas stream is then switched to a reactor containing regenerated acceptor, and the loaded acceptor is regenerated. Gas from the purging of the reactors between acceptance and regeneration is treated in the accepting reactor.

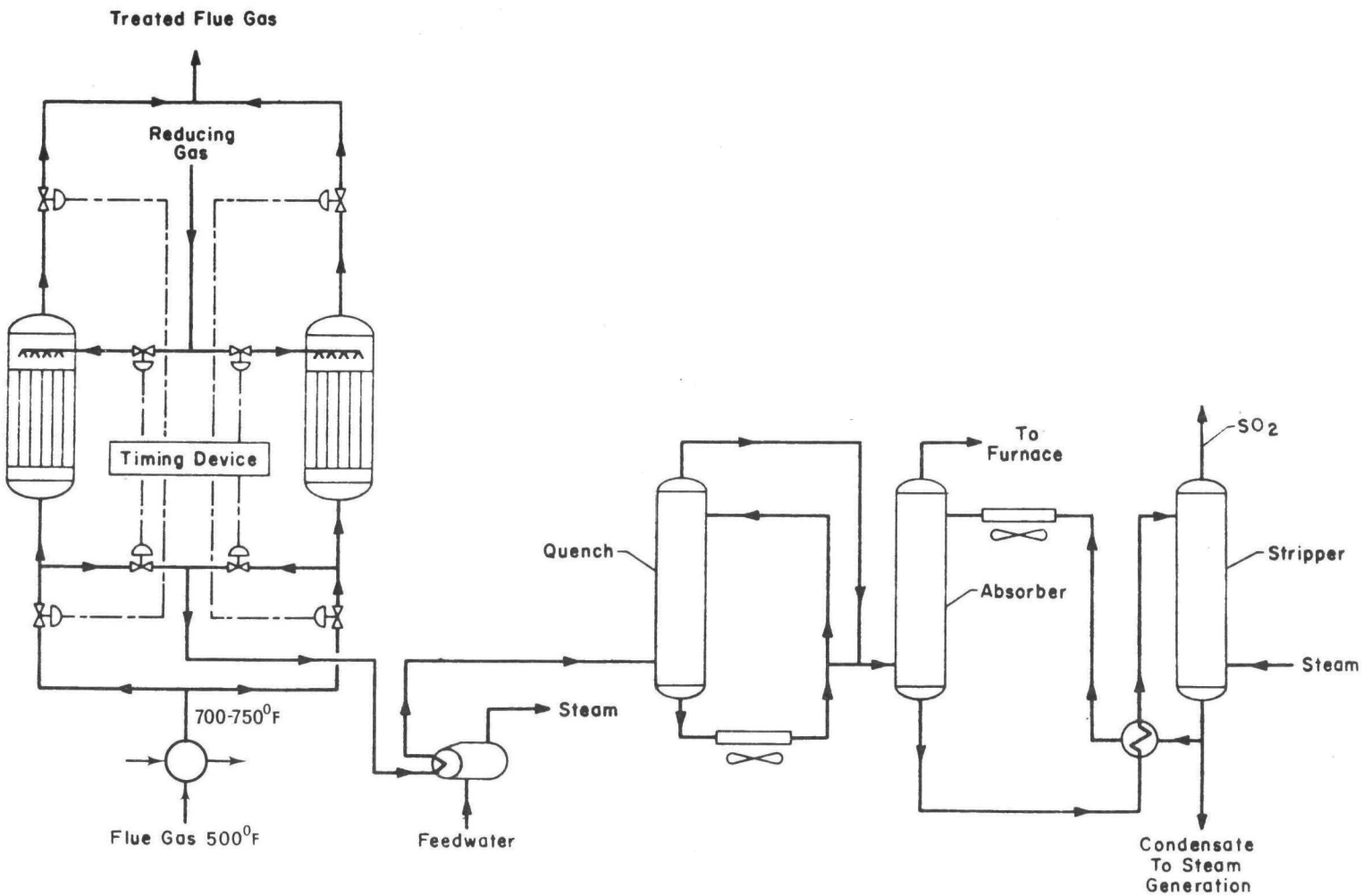

Figure 23. Shell Flue Gas Desulfurization Unit

In the "parallel passage" design of SFGD reactor internals, the acceptor material is contained in a series of packages arranged in a parallel configuration. The acceptor is contained between layers of wire gauze with spaces provided between acceptor packages for gas flow. In this way the gas flows along the surface of the acceptor packages and not through the acceptor material. This prevents pressure-drop buildup due to the deposition of particulate material present in many of the flue gases. For convenience in fabrication and handling, a number of layers of acceptor packages, appropriately spaced, are placed in a container to form a unit cell or module. The required number of these modules can then be placed in a suitably sized reactor vessel, according to throughput and SO_2 removal requirements.

In order to convert the cyclic regenerator reactor gas into a relatively constant flow of concentrated SO_2, the off-gas from the reactor regeneration cycle is charged through a cooler/condenser to an absorber/stripper system. Water (or a solvent having suitable absorption capacity for SO_2) is used to absorb SO_2 from the regeneration gas; surge capacity is provided on the absorption liquid to smooth fluctuations in the SO_2 rate.

CuO is outstanding as an acceptor in this application in that it readily forms sulfate with SO_2 in the presence of oxygen at, ideally, about 700-750°F, and also can be satisfactorily regenerated with reducing gas to yield concentrated SO_2 at about the same temperature. The stability of the acceptor in cyclic operation has been demonstrated in a pilot plant in over 20,000 hours of operation.

The basic reaction for acceptance of SO_2 from flue gas is as follows:

$$SO_2 + 1/2\ O_2 + CuO \longrightarrow CuSO_4 \qquad (9)$$

Copper sulfate releases the bulk of the accepted sulfur in the form of SO_2 upon regeneration with hydrogen-rich gas in accordance with the equation:

$$CuSO_4 + 2\ H_2 \longrightarrow Cu + SO_2 + 2\ H_2O \qquad (10)$$

Unconverted CuO is reduced to copper.

The following side reaction occurs to a minor extent, but is not significant when current regeneration procedures are followed:

$$CuSO_4 + 3\ H_2 \longrightarrow 1/2\ Cu_2S + 1/2\ SO_2 + 3\ H_2O \qquad (11)$$

Since regeneration reduces $CuSO_4$ to Cu, the following reaction must take place before the basic acceptance reaction can occur:

$$Cu + 1/2\ O_2 \longrightarrow CuO \qquad (12)$$

The following reaction occurs simultaneously, affecting the minor amount of Cu_2S formed during regeneration:

$$Cu_2S + 2\ 1/2\ O_2 \longrightarrow CuO + CuSO_4 \qquad (13)$$

The small amount of copper reacting in accordance with Eq. 11 undergoes the reaction of Eq. 13, of course, upon reintroduction of flue gas. The small extent to which this reaction occurs reflects the exceptional behavior of copper in this service and continuing improvement of regeneration techniques.

The reaction of Eq. 10 proceeds almost completely, with a sharp reaction front, when using hydrogen (or CO) as the regeneration agent. SO_2 evolution proceeds until the end of the regeneration period with no H_2 slip, and falls off sharply as regeneration gas slips through.

The very fast reaction of Eq. 12 proceeds with a sharp reaction front upon reintroduction of flue gas assuring that SO_2 in the flue gas will find oxidized copper with insignificant slip as long as a specified minimum oxygen content of the flue gas is maintained. The considerable heat release resulting from reactions of Eqs. 12 and 13 results in a temperature peak, which quickly travels through the reactor. To avoid significant initial slip of SO_2 from thermal decomposition and to protect the acceptor, the operating conditions and mechanical design of the reactor must be considered carefully. A mathematical model has been developed that reflects the kinetics of the acceptance/regeneration reactions and operating experience.

SO_2 is accepted according to the reaction described by Eq. 9 with the reaction front proceeding through the acceptor bed until the remaining part of unloaded or partially-loaded acceptor at the exit end of the reactor has become too small to ensure complete SO_2 removal. At this point, SO_2 will start to slip through into the treated gas. The reactor is switched to the regeneration mode when the cumulative slip has reached a specified exit SO_2 concentration.

Physical Size Requirements

Area requirements for the SFGD process have been estimated to be 37,500 - 52,500 sq ft for a 150,000 bpsd catcracking unit.[27,95]

Location in Regenerator Downstream Flow Train

After CO boiler

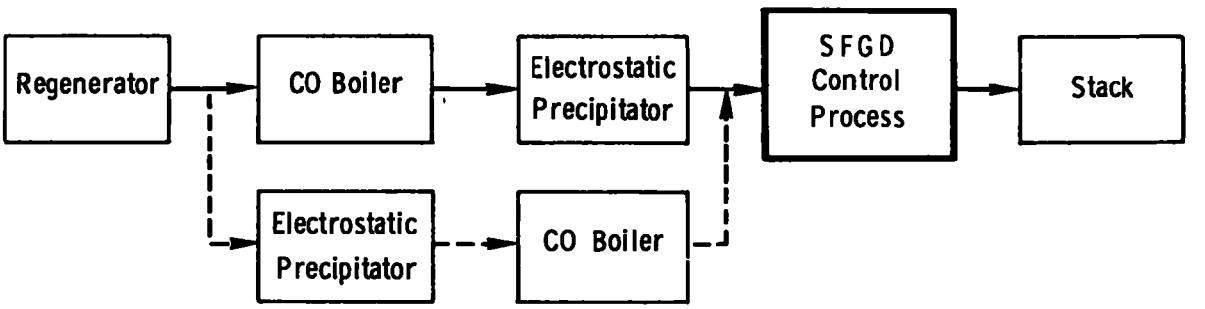

6.4.2.2 Economics

The capital cost and operating cost estimate, Figures 24 and 25, are based on data in the literature and contacts with Universal Oil Products. A complete operating cost summary appears in Tables F7, F8, and F9, Appendix F. Additional assumptions applied in the cost estimates include:

Steam cost - 60.2¢/1000 lb
Acceptor replacement cost - $1.87/lb
Operating labor - 1 man/shift
Initial catalyst charge added to fixed capital investment (50,000 bpsd - $179,000)
Acceptor lifetime - 1.5 years

6.4.2.3 Comments

The SFGD process was integrated into the FCC regenerator flow train after the CO boiler owing to the need for an oxidizing

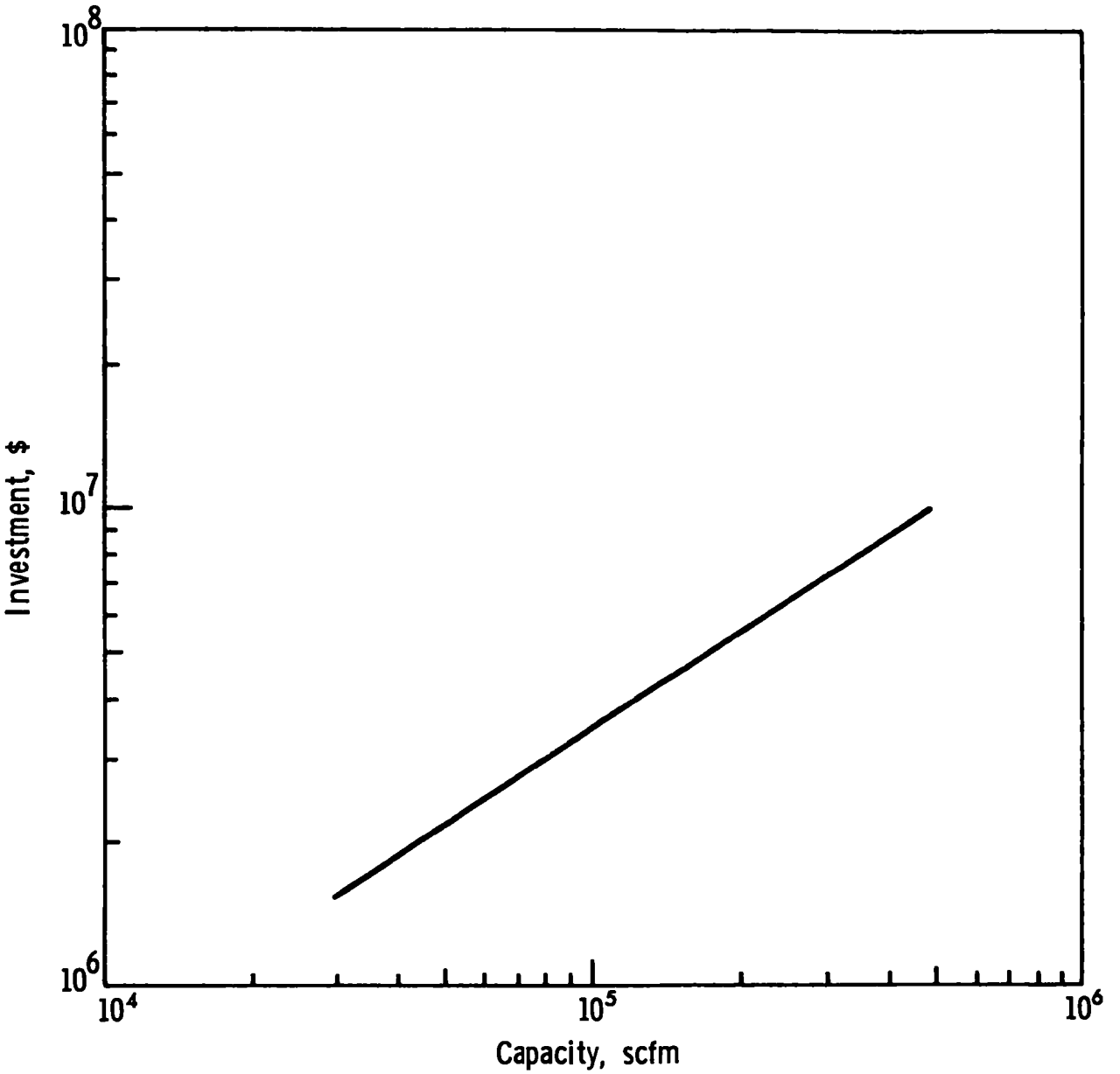

Figure 24. SFGD Capital Investment Cost (February 1973)

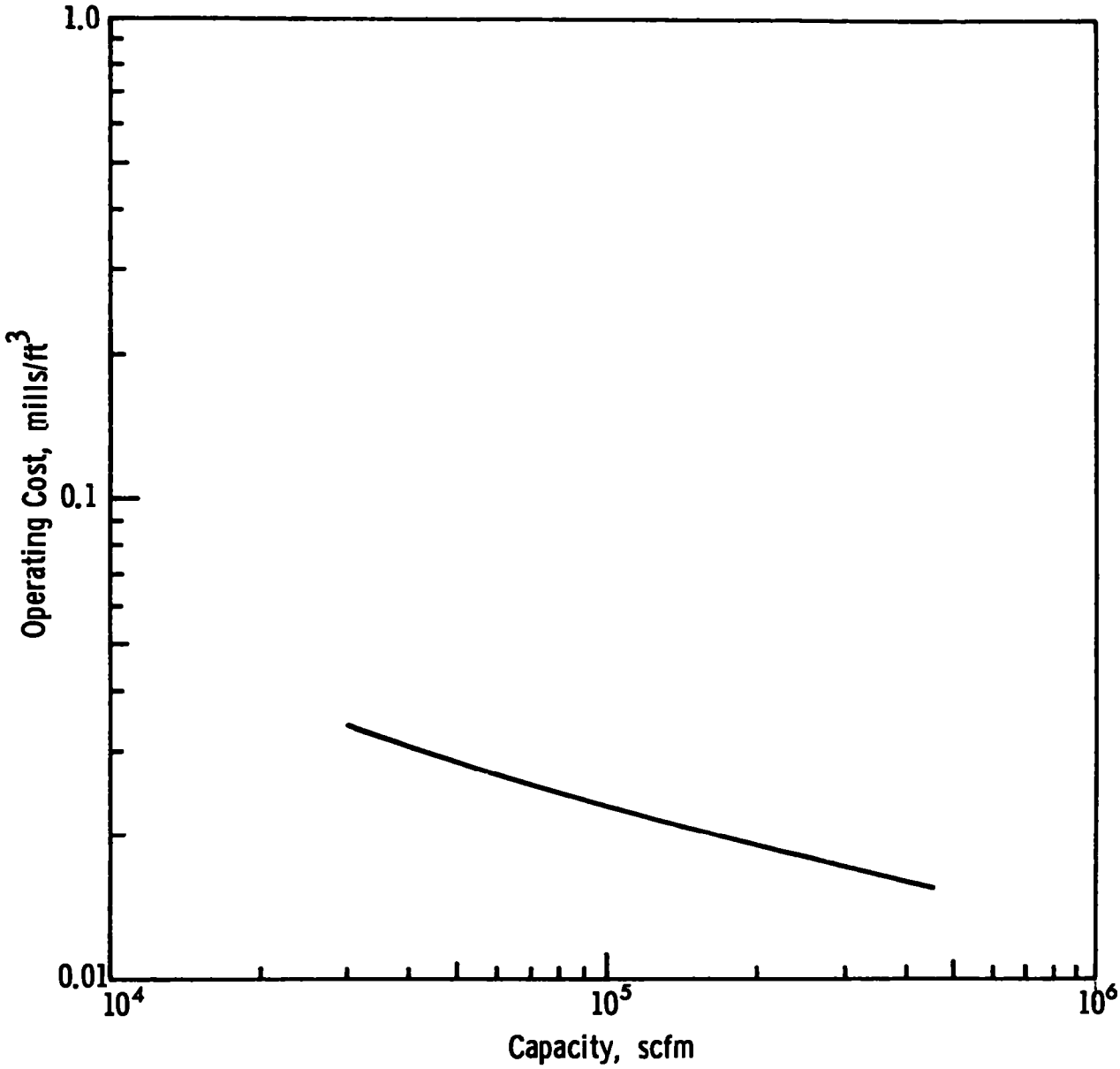

Figure 25. SFGD Operating Cost

atmosphere for the process operation. Ideally, however, the process would fit better into streams before the CO boiler. The high regenerator off-gas temperature at this point would avoid a significant expense for the gas reheat that is necessary if the process is inserted after the CO boiler. Some CO boilers, however, operate at temperatures higher than 500°F (see Table 7) and this problem would not arise. On the other hand, depending on the operation of a specific FCC regenerator, the off-gas leaving the regenerator can contain various concentrations of oxygen that may or may not be sufficient for the proper operation of the Shell process. The presence of high concentrations of carbon monoxide in this stream may, however, eliminate these oxidation effects. Additional experimentation to define the SFGD process operation under these conditions is required.

If the experimental work were to indicate that the effects of oxygen concentration prevail above those of carbon monoxide during the SO_2 accepting cycle (although this is highly improbable), an attractive modification of the process operation becomes apparent. The gas stream after passing through the acceptor cycle deprived of SO_2 could be utilized in the regenerator cycle and no hydrogen would be required. The same option exists assuming that the necessary oxygen for the acceptor cycle is supplied by hot air prior to initiation of the regenerator off-gas feeding to the acceptor reactor. Whether this possibility really exists will depend on the O_2, CO, SO_2, and acceptor equilibrium and kinetic conditions in both the acceptor and the regenerator reactors. It is also conceivable that many of these problems or possibilities can be resolved by contacting the process developer or by relatively simple thermodynamic calculations, and that no experimental work would be required. Our contacts failed to reveal that enough is known about the operation of the system described above.

Other advantages of the SFGD process include its insensitivity to particulates loading and simple static bed operation. This would allow for rather easy automation and trouble-free operation of this process and make the process more attractive for the refiners.

6.4.3 Union Carbide PuraSiv-S Process

This process has been developed by the Union Carbide Corporation, Linde Division, of Tarrytown, N.Y., and entered the list of flue gas desulfurization processes only a year ago (1972).

The PuraSiv-S process has been developed, pilot-plant tested, and is now ready for sale by Union Carbide Corp. The process has been tested on a commercial scale at Coulton Chemical Corporation in Oregon, Ohio.

6.4.3.1 Process Description

The PuraSiv-S process, Figure 26, is a fixed bed adsorption system for removing and concentrating SO_2 from SO_2 containing gases. Owing to competition of H_2O with SO_2 in the adsorption process on the tailor-made molecular sieve adsorbent, water must be removed from the flue gas prior to the adsorption step. The water vapor concentration of catalytic cracker flue gases ranges from 13.4 to 23.9% vol. Consequently, the flue gas must be cooled to about 60°F to reduce the water concentration to less than 2%, a requirement specified by the process developer. The Brink® demister after the gas cooling is an added precaution to eliminate SO_3 and water mist from the stream entering the molecular sieve adsorbers.

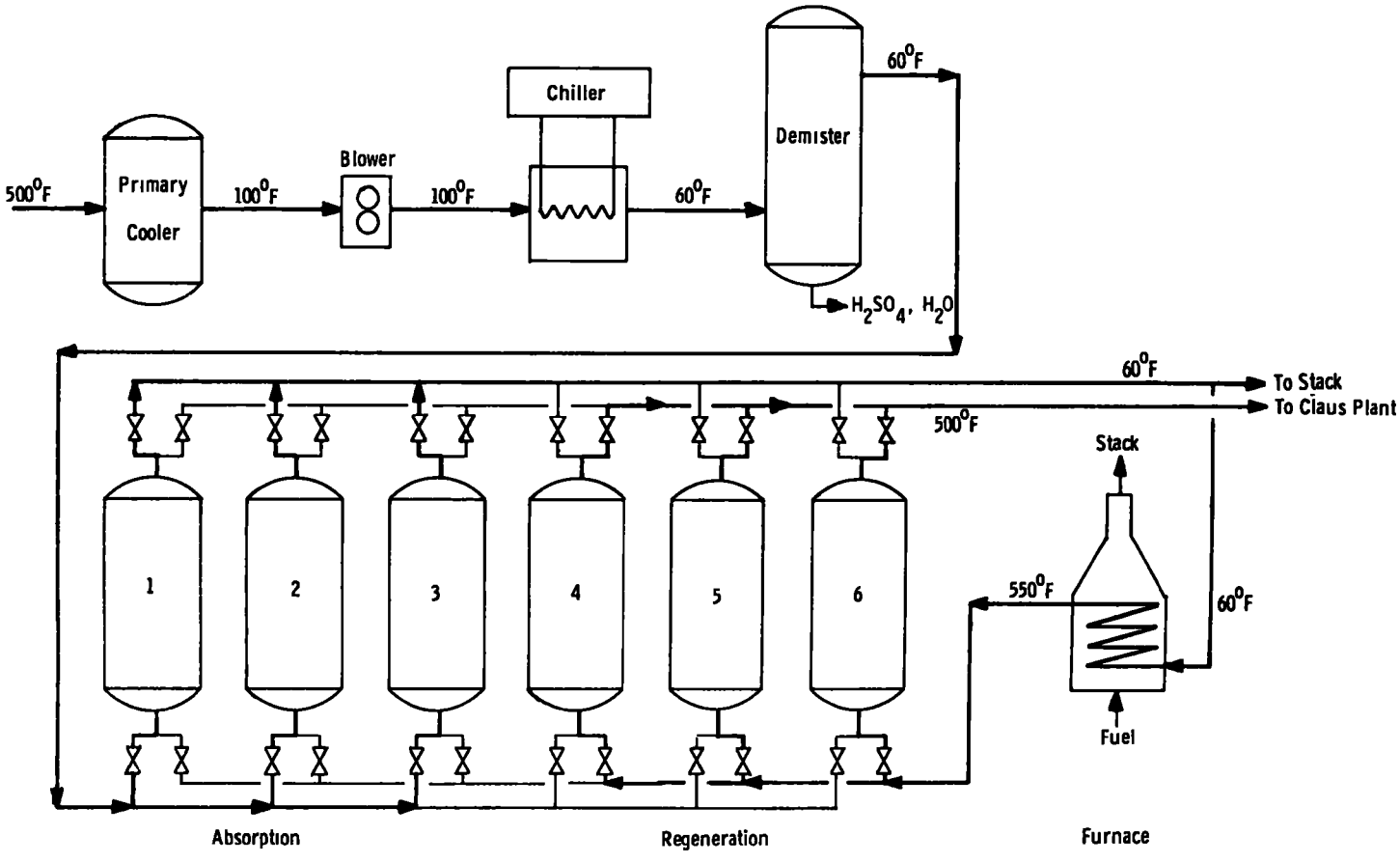

Figure 26. PuraSiv-S Process Flow Diagram

Upon thermal regeneration of the molecular sieve, the SO_2 is recovered and sent to a Claus unit for sulfur recovery. To maintain a constant and maximum SO_2 concentration feed to the Claus unit, six adsorption units operating like a three-phase electrical circuit are utilized. Three units are adsorbing while the other three are regenerating. Each of the regenerating units is at a different phase of regeneration so that one of the three units is always reaching its maximum SO_2 production. The entire system is operated by a proprietary timer-control system. The removal efficiency can be controlled to any desired level by cycle time and adsorber size.

Raw Materials and Chemicals

The major raw materials and chemicals needed to operate the PuraSiv-S process are cooling water, fuel oil, and molecular sieve adsorbent. The major item is the replacement of molecular sieve which must be done every two years.

Physical Size

For a flue gas rate of 135,000 scfm, the size requirements are 5250 sq ft with a height of 50 ft. Typical dimensions for the unit of this capacity are 70 ft x 75 ft x 50 ft.

Location in Regenerator Flow Train

The PuraSiv-S process would have to be placed after both an efficient electrostatic precipitator and a CO boiler. This is because the requirements for low particulates concentration in gas (essentially free of particles larger than 2-5 microns) to prevent adsorbent plugging and contamination and low gas temperatures are very critical.

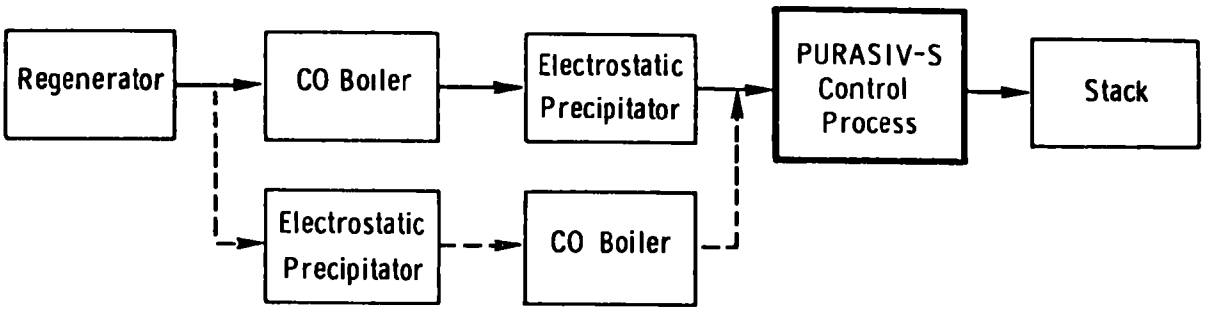

6.4.3.2 Economics

Figures 27 and 28 represent the capital investment and operating costs required for application of the PuraSiv-S process to the off-gases of an FCC regenerator. The data presented are based on published information and contacts with the process developer.[97,98,99] A complete operating cost summary is presented in Tables F10, F11, and F12, Appendix F. Additional assumptions used for the PuraSiv-S process include:

Temperature of flue gas entering the process is 500°F with 20% water by volume

Molecular sieve replacement-$1.25/lb

Molecular sieve lifetime-2 years

Operating labor - 1 man/shift

Initial catalyst charge added to fixed capital investment (50,000 bpsd - $1,451,200)

6.4.3.3 Comments

The PuraSiv-S process is reliable and capable of reducing SO_2 emission to any desired level. The reliability is attributable to the simplicity of the process, a straightforward adsorption-desorption. However, the process is very sensitive to flue gas composition. The tailor-made adsorbent is designed specifically for SO_2, but water competes with SO_2 for adsorption and must therefore be removed. This entails extensive cooling of the flue gas to 60°F, requiring massive and expensive heat exchange facilities. The molecular sieve adsorbent is effective in removing SO_2 in the presence of 7 to 10 percent CO_2, trace quantities of NO_x, and CO concentrations typically found in FCC regenerator off-gas.

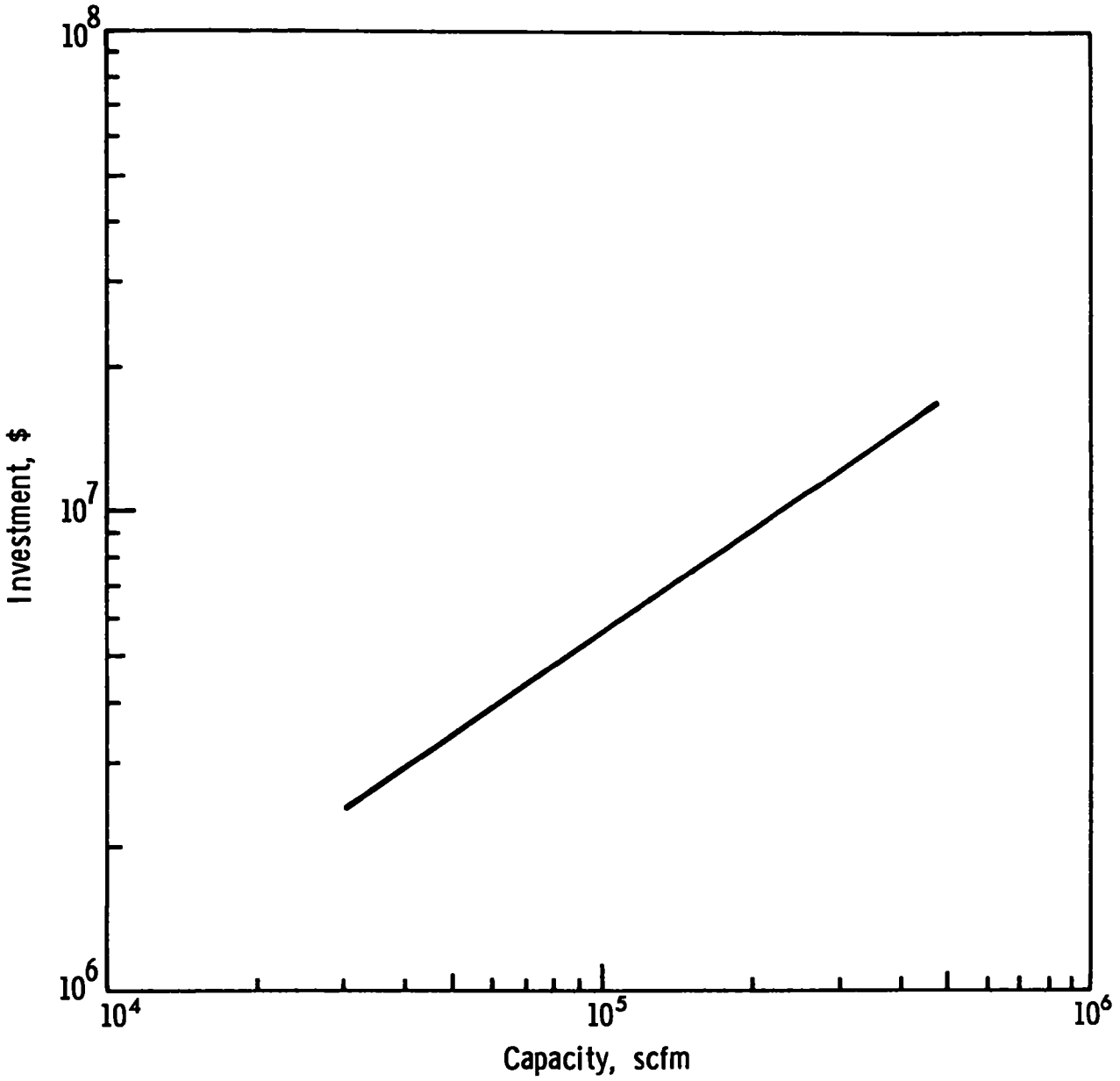

Figure 27. PuraSiv-S Capital Investment Cost (February 1973)

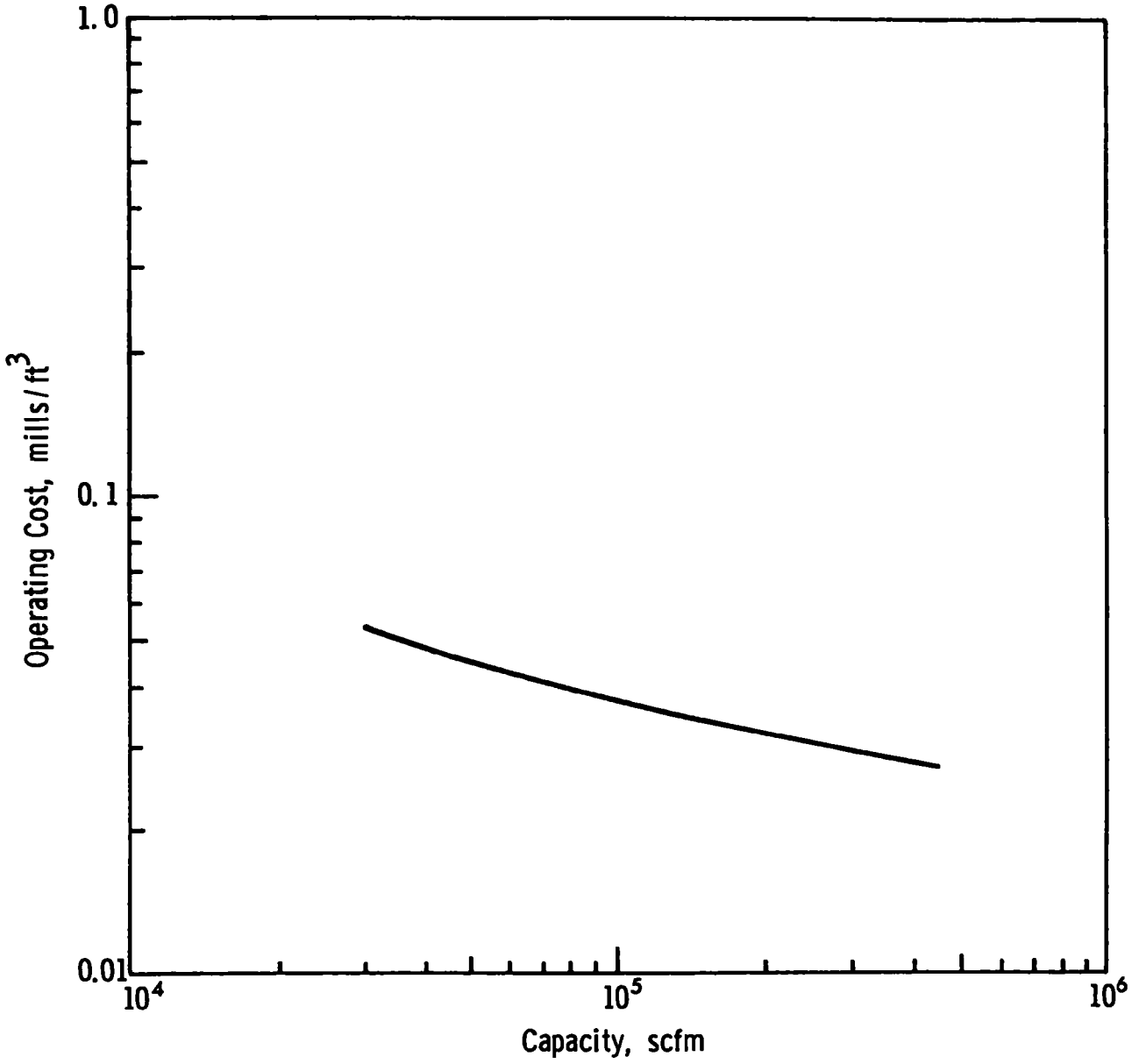

Figure 28. PuraSiv-S Operating Cost

Presence of particulates, however, has a detrimental effect on the adsorption process due to plugging of adsorption reactors.

6.5 SCRUBBING SYSTEMS

Two processes, the Wellman-Lord sodium sulfite absorption process and the MAGOX magnesium oxide scrubbing process, were evaluated in detail. In addition to these two scrubbing systems, other types of scrubbers were also considered and included limestone, ammonia, and zinc oxide scrubbing systems.

The possibility of applying the scrubber systems to gases with a reducing atmosphere and minimal oxygen concentrations appeared to be technically attractive. The reducing atmosphere could prevent oxidation of SO_2 to SO_3 and eliminate some of the operational and waste disposal problems that the scrubber systems experience when operated in oxidation atmosphere. All processes, however, had shortcomings not present in magnesia or sodium sulfite scrubbing. The shortcomings were primarily associated with scrubbing liquor regeneration. The ammonia systems produce $(NH_4)_2SO_4$, an undesirable product, or thermally decompose the $(NH_4)_2SO_4$ to NH_4HSO_4 and NH_3 (see reactions below) in order to recover SO_2. But NH_3 pollution problems are encountered.

$$NH_4HSO_4 + NH_4HSO_3 \longrightarrow (NH_4)_2SO_4 + SO_2 + H_2O \qquad (14\text{-a})$$

$$2\ NH_4HSO_4 + (NH_4)_2SO_3 \longrightarrow 2\ (NH_4)_2SO_4 + SO_2 + H_2O \qquad (14\text{-b})$$

$$(NH_4)_2SO_4 \longrightarrow NH_4HSO_4 + NH_3 \qquad (15)$$

Lime/limestone scrubbing is presently viewed as a sludge-producing process that creates unacceptable waste disposal problems, and regeneration with recovery of the sulfur value has yet to be demonstrated.[100] The process application to FCC regenerator off-gas in comparison with the two processes evaluated in detail was regarded as less attractive.

The zinc oxide process merely uses zinc oxide as an acceptor for SO_2 after it has been scrubbed from the flue gas by a sodium sulfite solution. The transfer involves some rather complicated chemistry and yet only recovers 70% of the sulfur removed from the flue gas.[88] The remainder is lost as $CaSO_4$.

6.5.1. Wellman-Lord Sodium Sulfite Absorption

The process has been developed by Davy Powergas, Inc., formerly Wellman-Power Gas, Inc., Lakeland, Fla.

The Wellman-Lord scrubbing process was commercialized in 1970. Table 11 lists the installations currently operating, being constructed, or on the drawing boards.

6.5.1.1 Process Description

The flow scheme for the basic process is shown in Figure 29. The SO_2-rich gas is contacted countercurrently in the absorber by the sodium sulfite solution and exits the absorber top stripped of SO_2. The solution leaving the bottom of the absorber, now rich in bisulfite, is discharged to a surge tank and then pumped to a proprietary evaporator/crystallizer in the regeneration section.

Low pressure steam is used to heat the evaporator and drive off SO_2 and water vapor. The sodium sulfite precipitates as it forms and builds a dense slurry of crystals.

The gas stream leaving the evaporator is subjected to partial condensation to remove the majority of the water vapor before the product SO_2 is discharged from the process. The condensate in the mixture with the sulfite slurry stream withdrawn from the evaporator is used for re-dissolving the slurry in the dissolving tank. The sulfite lean solution is then pumped to a surge tank

Table 11. WELLMAN-LORD SO_2 RECOVERY PROCESS DEVELOPMENT

Client	Location	Application Offgas Origin	S C F M Treated	Completion Date
Olin Corporation	Paulsboro, Nj	Sulfuric acid	45,000	July 1970
Toa Nenryo	Kawasaki, Japan	Claus Plant	41,000	August 1971
Japan Synthetic Rubber Co.	Chiba, Japan	Oil Fired Boiler	124,000	August 1971
Standard Oil of California	El Segundo Refinery El Segundo, Ca	Claus Plants	30,240	June 1972
Allied Chemical Corp.	Calumet Works Chicago, Ill	Sulfuric acid	29,580	August,1972
Olin Corporation	Curtis Bay, Md	Sulfuric acid	78,046	in progress
Northern Indiana Public Service Co. (NIPSCO)	Gary, Ind	Coal Fired Boiler - 115 MW power plant	310,000	in progress
Sumitomo Chiba Chemical Co.	Chiba, Japan	Oil Fired Boiler	250,000	in progress
Standard Oil of California	Richmond Refinery Richmond, Ca	Claus Plants	37,000	in progress
Japanese Synthetic Rubber	Yokkaichi, Japan	Steam Boiler Plant (SO_2 converted into sulfuric acid)	270,000	in progress
Kashima Oil Company	Kashima, Japan	Claus Plants	20,200	in progress
Confidential	Kawasaki, Japan	Steam Boiler Plant (SO_2 converted into sulfuric acid)	412,000	in progress
Chubu Electric	Nagoya, Japan	Oil Fired Boiler - 220 MW power plant	390,000	May 1973
Standard Oil of California	Richmond, Ca	Claus Plant - 325 TPD S	30,000	in progress
Standard Oil of California	El Segundo, Ca	Claus Plant - 325 TPD S	30,000	in progress
Confidential	Kansi, Japan	Power Plant	390,000	in progress
Toa Nenryo	Arita, Japan	Claus Plant	35,000	in progress
Toa Nenryo	Hatsushima, Japan	Claus Plant	9,000	in progress

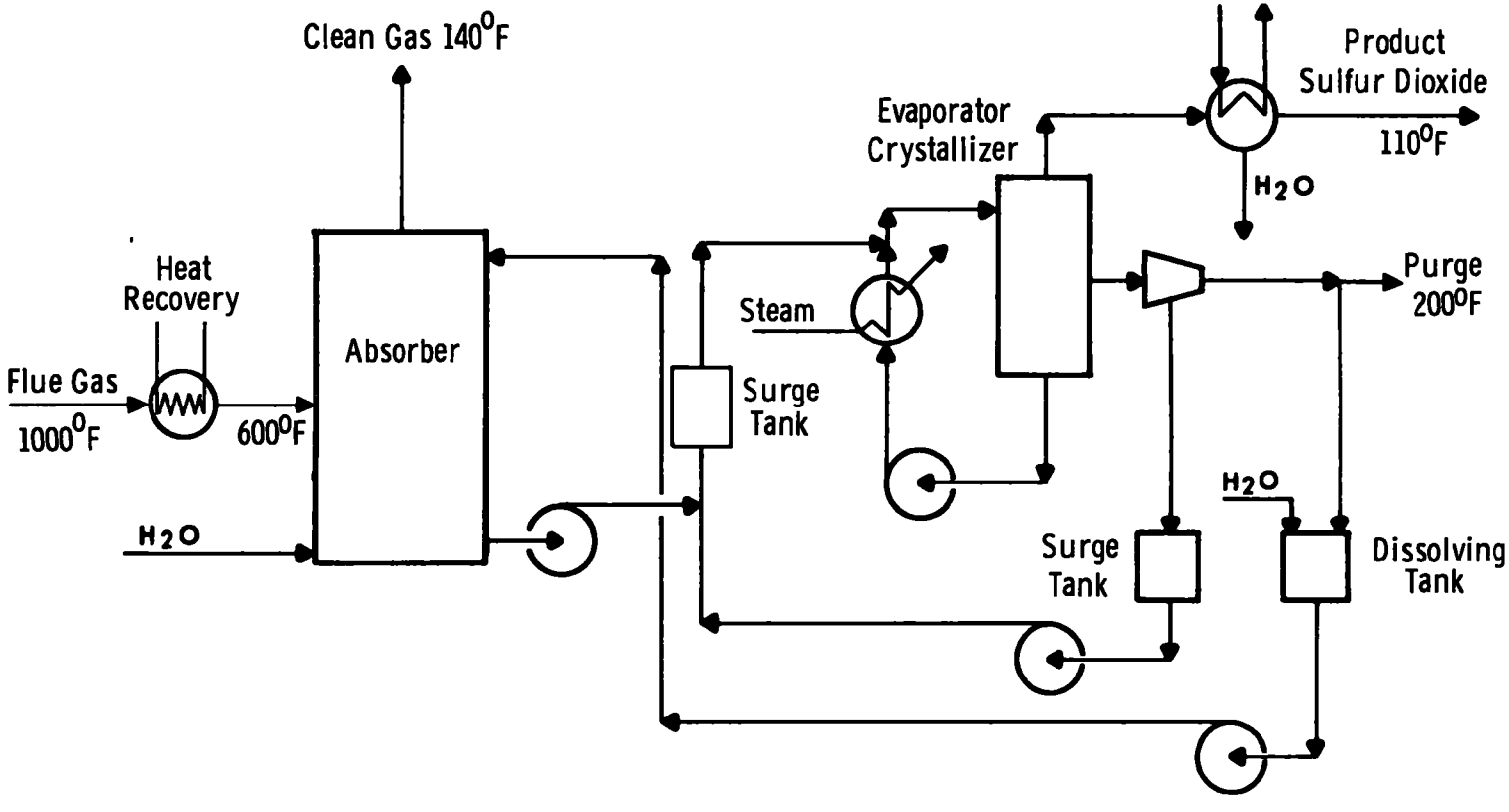

Figure 29. Wellman Lord, Inc., Sulfur Dioxide Recovery, Sodium System

and fed back to the absorber. To ensure the selection of the optimum process design in relation to the overall facility the pretreatment of feed SO_2-rich gas requires evaluation on a case-by-case basis. The type of pretreatment ultimately chosen will depend on gas temperature, particulate content, organic sulfur content, sulfur trioxide content, acid mist or vapor content, and humidity.

The process is based on a sodium sulfite/bisulfite cycle. The reactions that take place in the process can be abbreviated for simplicity as follows:

<u>Absorption</u>

$$SO_2 + Na_2SO_3 + H_2O \longrightarrow 2NaHSO_3 \qquad (16)$$

<u>Regeneration</u>

$$2NaHSO_3 \longrightarrow Na_2SO_3\downarrow + SO_2\uparrow + H_2O\uparrow \qquad (17)$$

Apart from the two major reactions above, sodium sulfate (Na_2SO_4), which is nonregenerable in the normal process, is formed in the absorber as a result of solution contact with oxygen and sulfur trioxide as follows:

$$Na_2SO_3 + 1/2\ O_2 \longrightarrow Na_2SO_4 \qquad (18)$$

and

$$2Na_2SO_3 + SO_3 + H_2O \longrightarrow Na_2SO_4 + 2NaHSO_3 \qquad (19)$$

The sodium sulfate so formed is controlled at a level of approximately 5 wt % in the absorber feed stream by maintaining a continuous purge from the system. High concentration of SO_3 in the flue gas, if not removed in the gas pretreatment, would result in an increased concentration of Na_2SO_4 and proportionally increased purge of the scrubbing liquor.

An additional source of sodium sulfate and thiosulfate is the so-called disproportionation reaction which takes place in the regeneration section:

$$6NaHSO_3 \longrightarrow 2Na_2SO_4 + Na_2S_2O_3 + 2SO_2 + 3H_2O \qquad (20)$$

Laboratory research and commercial experience have guided the selection of process operating conditions that minimize all these sources of sodium sulfate formation.

A makeup of caustic is required to replace that lost in the purge stream. The caustic makeup solution reacts with the sodium bisulfite in the absorber solution to form additional sodium sulfite:

$$NaOH + NaHSO_3 \longrightarrow Na_2SO_3 + H_2O \qquad (21)$$

Soda ash (Na_2CO_3) can also be used as the makeup source of sodium.

The simple regeneration scheme of the patented Wellman-Lord process relies on the favorable solubilities of the sodium system. The bisulfite form has almost twice the solubility of sulfite at the temperatures considered for the process. Because of this it is possible to feed the absorber with a saturated sulfite solution, or even a slurry, without any fear of additional crystallization or scale forming despite considerable evaporation of water. This is because as SO_2 absorption proceeds, the composition of the solution is shifted in the direction of increasing solubility as reaction (16) demonstrates.

There are several advantages to operating the absorber with highly concentrated solutions. The solubility of oxygen decreases rapidly as salt concentration increases and so the mass transfer

of oxygen into the solution is slowed appreciably. This reduces oxidation of the sodium salts to sodium sulfate. Also the steam requirements of the process are directly related to the quantity of water pumped around the system. Operating at or near saturation with respect to sulfite thus reduces the overall steam consumption.

The same solubility effect is taken advantage of in a reverse fashion in the regeneration section. As SO_2 is stripped from the concentrated solution, the sulfite salt is formed, rapidly reaching its solubility limit, and precipitates as crystals. The low SO_2 vapor pressure component (sodium sulfite) in the regenerated solution is continuously removed from the system and the regeneration operation proceeds with a constant high percentage of bisulfite in solution permitting a considerable reduction in the stripping steam requirements.

The absorber is a two or three stage contacting device. Depending on the requirements of a specific application, the unit may be either a tray or a packed tower. For most gases treated, the absorber will require recirculation around each individual stage, since the quantity of feed solution is insufficient to adequately wet the trays or packing.

During operation the recirculation rate can be throttled until the SO_2 emissions from the process increase up to the specified requirements. This will minimize oxidation reactions since the absorption of oxygen is liquid-film controlled and therefore proportional to liquid rate. The absorption of SO_2 is gas-film controlled and therefore relatively insensitive to liquid rate.

An inherent advantage of the Wellman-Lord process is that the absorption system can be physically separated by a large distance

from the regeneration system. In some applications, it may be practical to treat gases from more than one plant by installing separate absorbers for each source of SO_2, with all the absorbers being supplied from a common regeneration system.

The use of solution storage not only enables the process to operate smoothly during frequent changes of gas flow or SO_2 concentration, but it also permits a complete shutdown of the regeneration section to perform scheduled maintenance activities, without any pause in SO_2 absorption. This feature minimizes the amount of expensive spare equipment required with no sacrifice in basic pollution control reliability.

The heart of the regeneration system is a conventional forced-circulation evaporator/crystallizer. The design parameters of this unit have been developed such that long-term continuous operation is assured. The evaporator can be designed to use very low pressure exhaust steam (30 psig), which might otherwise be discharged to the atmosphere. In very large plants or in case of high cost steam it is practical and economical to operate the regeneration system as a double effect evaporator. This will reduce steam consumption by about 40-45%.

The gases leaving the evaporator are subjected to one or more stages of partial condensation. Existing plants are operating with both air and water-cooled condensers in this service. The final product SO_2 can be delivered at whatever quality is required for further processing. It is suitable for conversion to high grade sulfuric acid, elemental sulfur, or liquid SO_2. Existing Wellman-Lord plants use the SO_2 product for either sulfuric acid or sulfur production.

A small amount of the circulating solution oxidized to a non-regenerable sulfate form and purged from the system can be dried for sale or disposal, or it can be treated to permit its discharge as an innocuous effluent. Other process steps are available which recover the sodium values, thus allowing the system to operate as a closed loop.

Raw Materials and Chemicals

Sodium as NaOH or Na_2CO_3 - 0.45 lb/lb S recovered[101]

Steam (low pressure 30 psig, 275°F) - 33 lb/lb S recovered[101]

Oxidation inhibitors

Physical Size Requirements

The regeneration system does not need to be in the immediate vicinity of the scrubber. With limited area in petroleum refineries around catalytic cracking units, this feature could be advantageous. As can be seen from the listing of commercial installations, Table 11, several small units in the 30,000 scfm range have been built to control emissions from refinery Claus plants. This suggests other advantages for the process: the process is known to the refiners, and multiple scrubbers within a refinery could control several sources of SO_x emission using a centrally located regeneration plant.

Location in Regenerator Downstream Flow Train

The Wellman-Lord process should precede the CO boiler to avoid an oxidizing atmosphere, which would adversely affect the sulfite concentration by oxidizing it to sulfate, and increase sodium requirements.

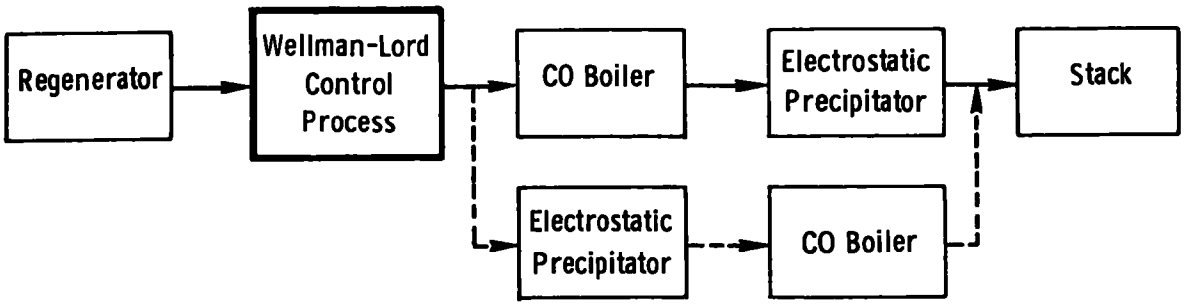

6.5.1.2 Economics

The capital investment and operating costs for the Wellman-Lord scrubbing process are illustrated in Figures 30 and 31. For capital and operation cost estimates the results from several sources of information are presented due to unreconcilable differences among them.[101,102,104,105,109,110]

Detailed operating cost estimates are summarized in Tables F13, F14, and F15, Appendix F. The following assumptions were made in addition to those appearing in Section 3.5.2.

NaOH Cost - $60/ton

Operating labor - 3 men/shift

No charge or credit was applied for disposal or use of Na_2SO_4.

6.5.1.3 Comments

The Wellman-Lord sodium sulfite absorption system has several attractive features that make it desirable for application to SO_x control of fluid catalytic cracking regenerator flue gas. Several units are presently operating on the tail gases from refinery Claus units. As already mentioned, the regeneration

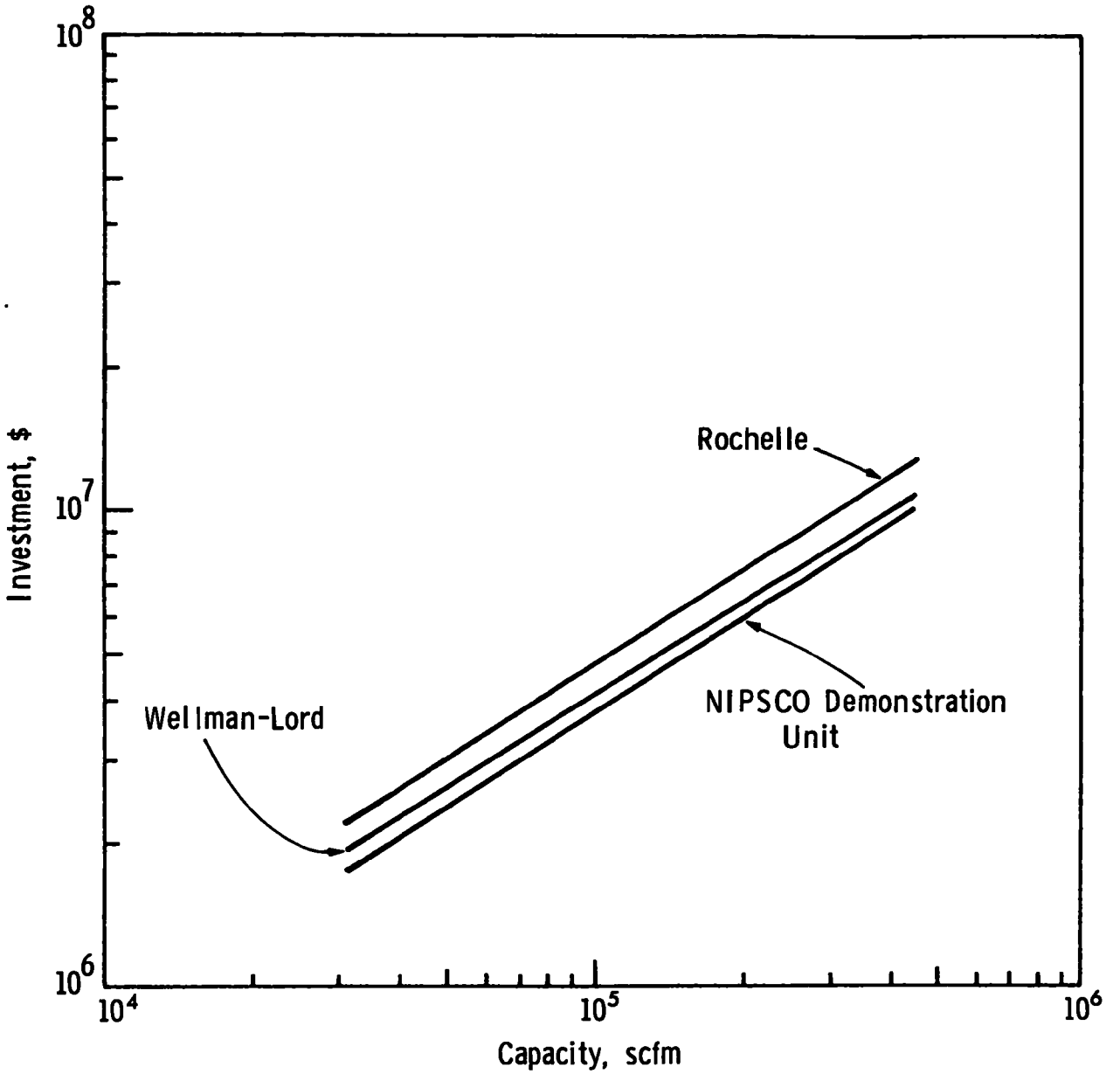

Figure 30. Wellman Lord, Inc., Capital Investment Cost (February 1973)

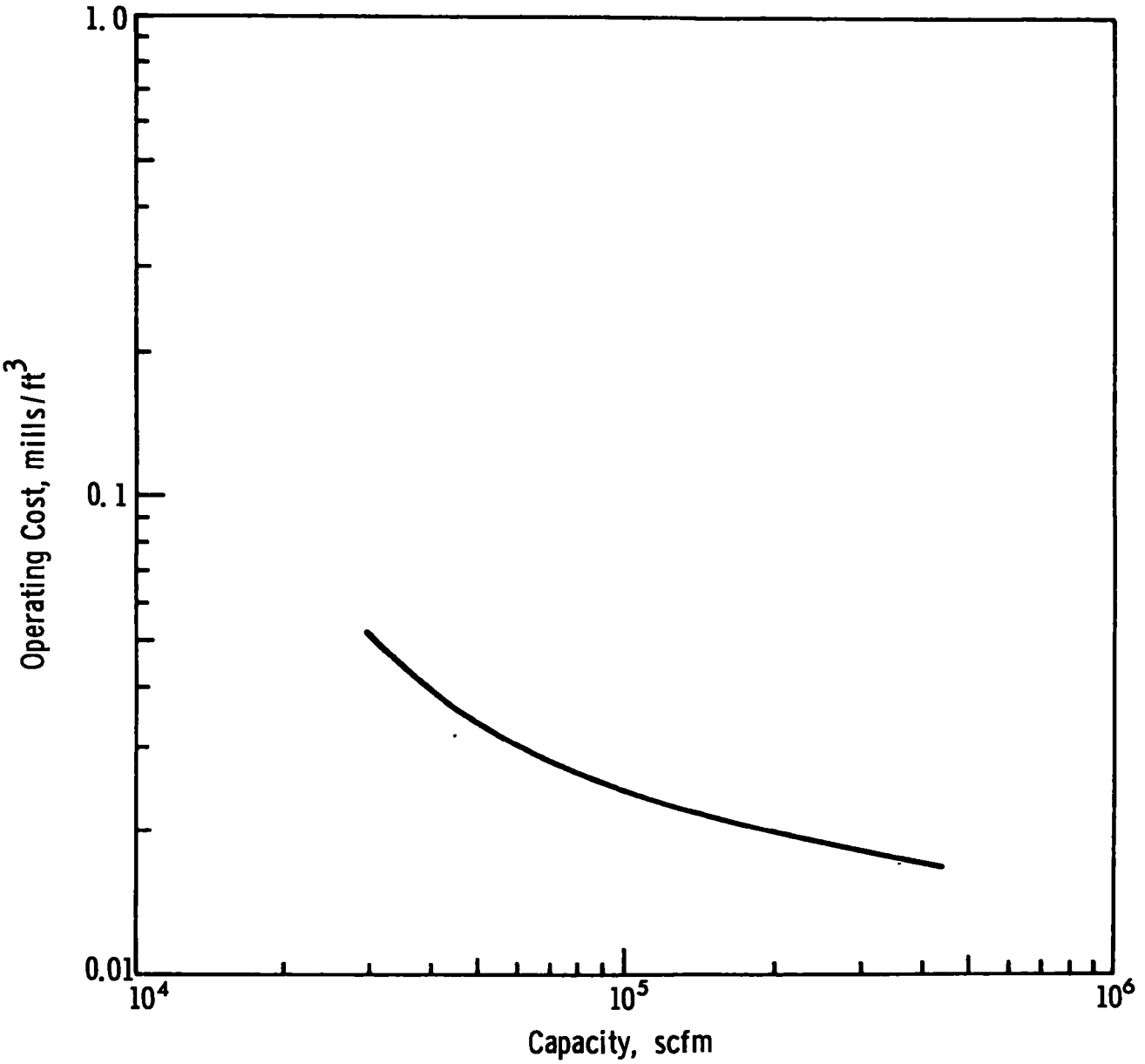

Figure 31. Wellman-Lord, Inc., Operating Cost

section may be physically removed from the absorber so that multiple sources of SO_x may be treated using a common regeneration system. Also, the system can be designed to obtain virtually any removal efficiency for sulfur oxides.

The process is fully developed. The reliability of the process can be demonstrated by the operating records of existing commercial installations. At Japan Synthetic Rubber Company a unit operated from May 9, 1972 to March 1, 1973 with an on-stream factor of 100%, and operated from June 1971 to March 1973 with an on-stream factor of 97%. Depending on the size of the surge tanks, the regeneration system may be shut down for maintenance with the scrubber continuing operation. The surge tanks will also minimize any difficulty involved with fluctuation of flue gas concentration.

Areas in which further study is required include an examination of possible catcracker catalyst effect on the oxidation of sulfite to sulfate, which would increase the waste disposal problem and the process operating cost. The cost for disposal of a dried salt suitable for landfill could range from $0.75 to $5.00 per ton while deep well injection of a solution compatible with the geology of the well could cost $1.00 per 1000 gallons or $6.85 per ton (based on 3.5% brine disposal cost). The dried mixture of Na_2SO_4 and Na_2SO_3 might be a desirable raw material for the paper or glass industry.

In relation to the waste disposal problem, further study is needed to investigate possible recovery techniques for the purge stream. The loss of sodium value consists of approximately 40 lb Na lost per 10^6 scf treated.[101] This value, as well as the performance of the scrubber, will be affected by the SO_3 concentration in the flue gas. Higher levels of SO_3 and O_2 will reduce the desirability of this process. Applying the process to gases from the FCC

regenerator with its reducing atmosphere and low oxygen concentrations is an attractive possible solution. The effects of other components present in the regenerator off-gas, however, will need to be investigated. The process would control the particulates emissions but would require an additional reheat of the desulfurized stream to prevent plume formation after the stream has been discharged to the atmosphere.

6.5.2 Magnesium Oxide Scrubbing

The process has been developed by Chemical Construction Company (Chemico) and Basic Chemicals, New York, New York.

A 425,000 acfm demonstration unit has been built on the No. 6 unit of Boston Edison's Mystic Station. Boston Edison paid for the absorption system while EPA furnished funds for magnesium oxide regeneration. Construction was completed in April 1972.[113] To date each of the process steps has been demonstrated with better than 90% SO_2 removal efficiency. Further long-term operation is planned to evaluate system reliability.

6.5.2.1 Process Description

The Chemico/Basic Magnesia Slurry process for recovery of sulfur dioxide from stack gases is shown schematically in Figure 32. The process involves operations associated with the following primary areas: (1) particulate removal (3) slurry handling and dewatering, (4) solids drying and calcining, and (5) SO_2 by-product manufacturing. The overall process chemistry involved is represented by the reactions shown in Table 12.

Flue gas containing SO_2 and catalyst fines passes into a particulate scrubber where particulate matter is removed using recirculated water as the scrubbing medium. A bleed stream from the scrubber is thickened to concentrate the fines as a slurry underflow, which

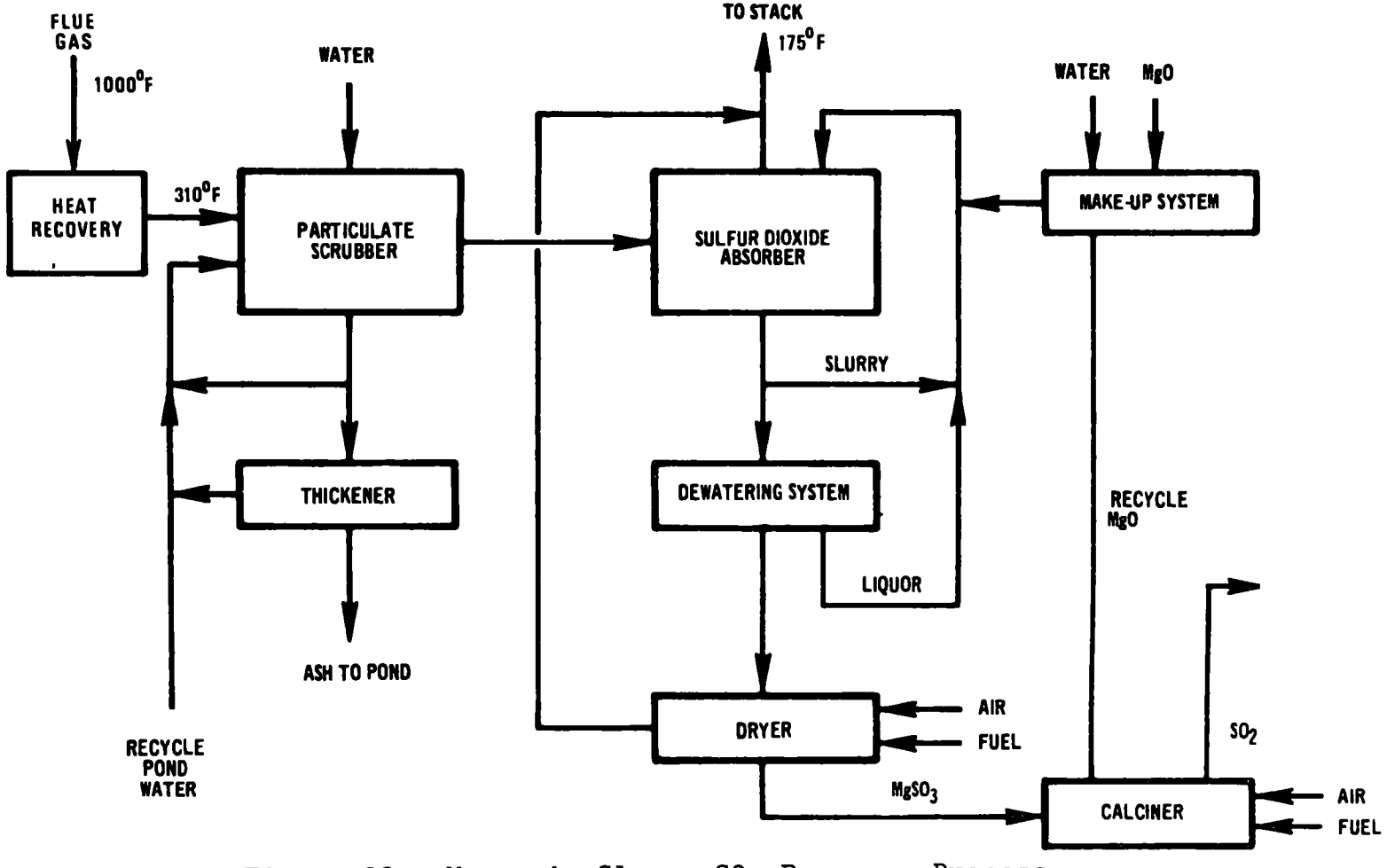

Figure 32. Magnesia Slurry SO_2 Recovery Process

Table 12. CHEMISTRY OF MAGNESIA SLURRY SO_2 RECOVERY PROCESS

ABSORPTION

Main Reactions

$$MgO + SO_2 + 3H_2O \rightarrow MgSO_3 \cdot 3H_2O \quad (22)$$

$$MgO + SO_2 + 6H_2O \rightarrow MgSO_3 \cdot 6H_2O \quad (23)$$

Side Reactions

$$MgSO_3 + SO_2 + H_2O \rightarrow Mg(HSO_3)_2 \quad (24)$$

$$Mg(HSO_3)_2 + MgO \rightarrow 2MgSO_3 + H_2O \quad (25)$$

$$MgO + SO_3 + 7H_2O \rightarrow MgSO_4 \cdot 7H_2O \quad (26)$$

$$MgSO_3 + \tfrac{1}{2}O_2 + 7H_2O \rightarrow MgSO_4 \cdot 7H_2O \quad (27)$$

DRYING

Main Reactions

$$MgSO_3 \cdot 3H_2O \overset{\Delta}{\rightarrow} MgSO_3 + 3H_2O \quad (28)$$

$$MgSO_3 \cdot 6H_2O \overset{\Delta}{\rightarrow} MgSO_3 + 6H_2O \quad (29)$$

$$MgSO_4 \cdot 7H_2O \overset{\Delta}{\rightarrow} MgSO_4 + 7H_2O \quad (30)$$

Side Reaction

$$MgSO_3 + \tfrac{1}{2}O_2 \overset{\Delta}{\rightarrow} MgSO_4 \quad (31)$$

REGENERATION

$$MgSO_3 \overset{\Delta}{\rightarrow} MgO + SO_2 \quad (32)$$

$$MgSO_4 + \tfrac{1}{2}C \overset{\Delta}{\rightarrow} MgO + \tfrac{1}{2}CO_2 + SO_2 \quad (33)$$

is transported to a disposal area. Overflow from the thickener is returned to the scrubber circuit for reuse.

Flue gas leaving the particulate scrubber enters a venturi absorber where it is contacted co-currently with an aqueous recycled slurry containing magnesium oxide (MgO), magnesium sulfite ($MgSO_3$), and magnesium sulfate ($MgSO_4$). The absorption reaction takes place between SO_2 and magnesium oxide and the magnesium sulfite is formed. Some of the SO_2 may also react with $MgSO_3$ in the presence of water to form magnesium bisulfite, which immediately reacts with the excess MgO present to yield additional $MgSO_3$. The quantity of MgO in the absorption slurry is maintained in excess of the stoichiometric requirement for reacting with all of the SO_2 present in the flue gas. A portion of the sulfur trioxide (SO_3) contained in the flue gas is absorbed in the slurry and reacts to form $MgSO_4$. Additional amounts of $MgSO_4$ can also be formed due to *in situ* oxidation of a portion of the magnesium sulfite.

The resulting aqueous slurry is discharged from the absorber and contains hydrated crystals of MgO, $MgSO_3$, and $MgSO_4$ as well as a solution that is saturated with each of these components. A continuous side-stream of this recycled slurry is diverted to a centrifuge where partial dewatering produces a moist cake containing crystals of $MgSO_3 \cdot 3H_2O$, $MgSO_3 \cdot 6H_2O$, $MgSO_4 \cdot 7H_2O$, and unreacted MgO. The clear liquor concentrate is returned to the main recirculating slurry stream together with makeup MgO slurry, and the resulting combined slurry is recycled to the absorber for further SO_2 recovery. The wet solids cake is conveyed to a dryer where free and bound moisture is removed using a direct-contact drying gas under non-oxidizing conditions. The dryer product is subsequently calcined to produce MgO, which is reused

in the absorption system after having been slaked and slurried in a makeup tank. The SO_2-rich effluent gas from the calciner is then employed in the production of either sulfuric acid, elemental sulfur, or liquefied SO_2.

Raw Materials and Chemicals

The process requires magnesium oxide and carbon for its operation. Amounts of both raw materials will depend on the presence and formation of $MgSO_4$ in the system as well as the regeneration capabilities of a specific process. Formation of $MgSO_4$ will be proportional to the flue gas SO_3 concentration with higher SO_3 concentration yielding more $MgSO_4$.

Physical Size Requirements

The area required for a two-stage venturi scrubber system with fluid bed dryer and calciner was estimated at approximately 1530 cu ft/1000 bpsd.[83]

Location in Regenerator Downstream Flow Train

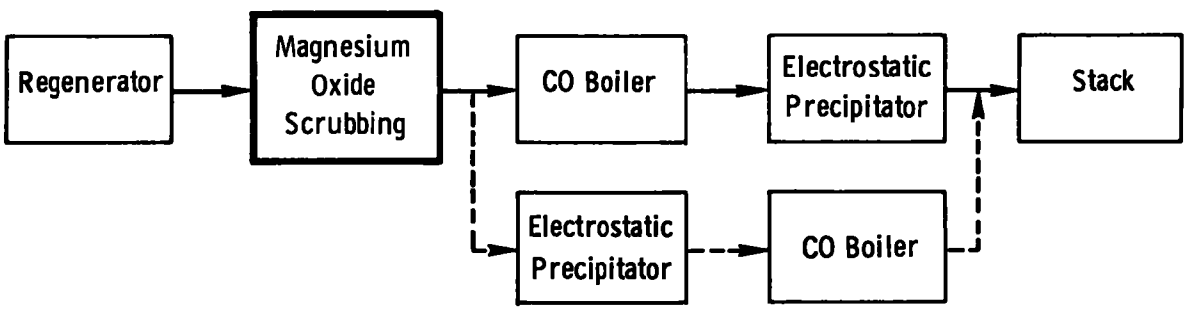

The scrubbing system should be installed upstream of the CO boiler to minimize oxidation of sulfite to sulfate. This is advantageous in that it minimizes the operating expense of regeneration reactions (32) and (33).

$$MgSO_3 \xrightarrow{\Delta} MgO + SO_2 \quad (32)$$

$$MgSO_4 + 1/2\ C \xrightarrow{\Delta} MgO + 1/2\ CO_2 + SO_2 \quad (33)$$

Regeneration of $MgSO_3$ does not require carbon, an added raw material expense.

6.5.2.2 Economics

The capital investment and operating costs for magnesium oxide scrubbing appear in Figures 33 and 34. The capital and operating cost estimates are based on data in published literature.[83,88] The detailed operating cost estimates are summarized in Tables F16, F17, and F18, Appendix F. Additional assumptions made specifically for this process are:

Lime cost - $16/ton

MgO cost - $102.50/ton

Coke cost - $23.50/ton

Fuel oil cost - $0.09/gal

Operating labor - 3.5 men/shift

6.5.2.3 Comments

Magnesium oxide scrubbing remains a potential candidate for SO_x removal from the FCC regenerator flue gas. The long-term reliability of the process is yet to be evaluated. As a regenerable process it is similar to a regenerable limestone scrubber, but the calcining temperature required for regeneration is much lower. Magnesium sulfite and sulfate are optimally calcined between 750 and 1100°F [88] while the calcium system requires temperatures in the vicinity of 2000°F.[100] An additional

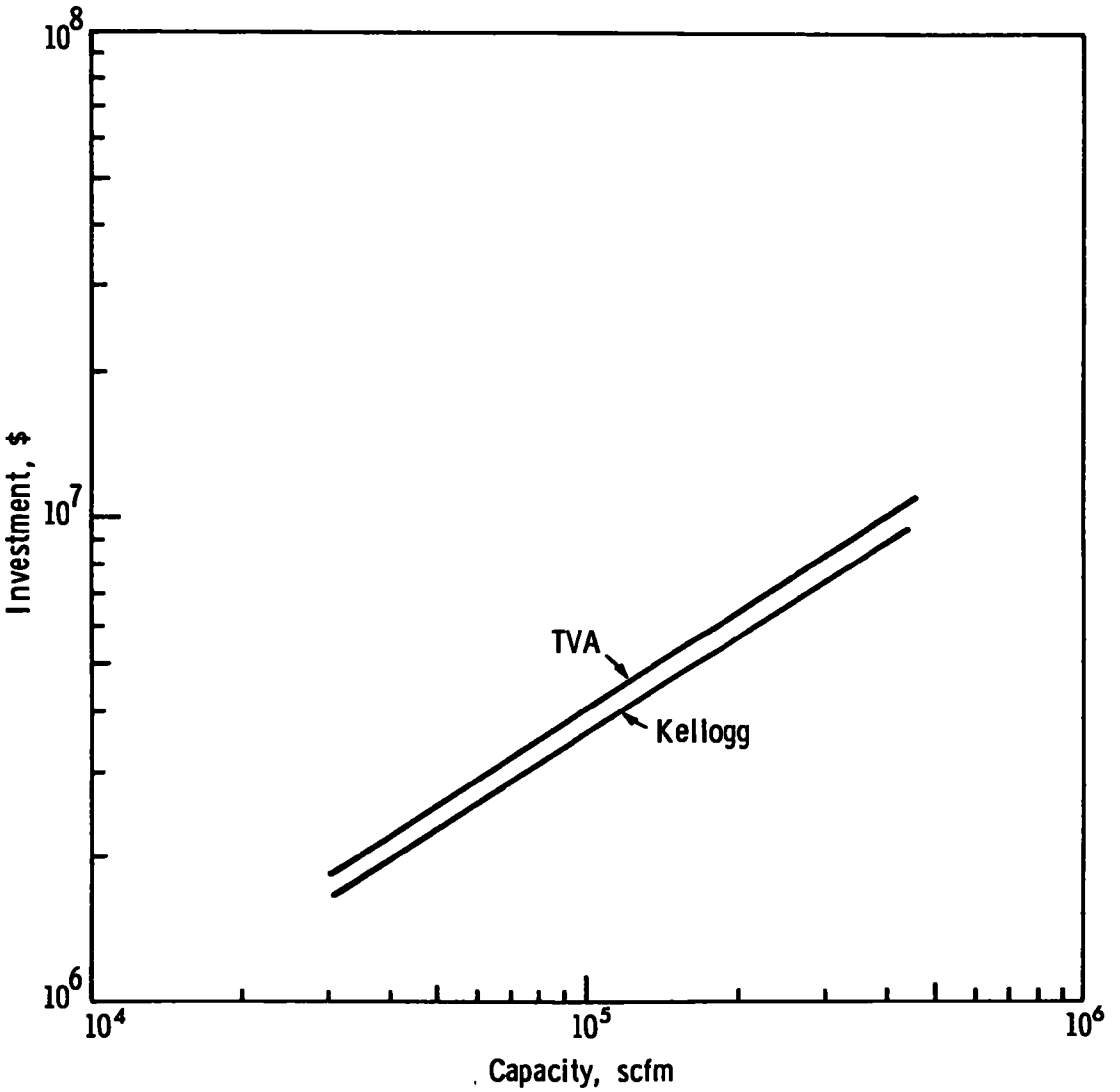

Figure 33. Magnesium Oxide Scrubbing, Capital Investment Cost (February 1973)

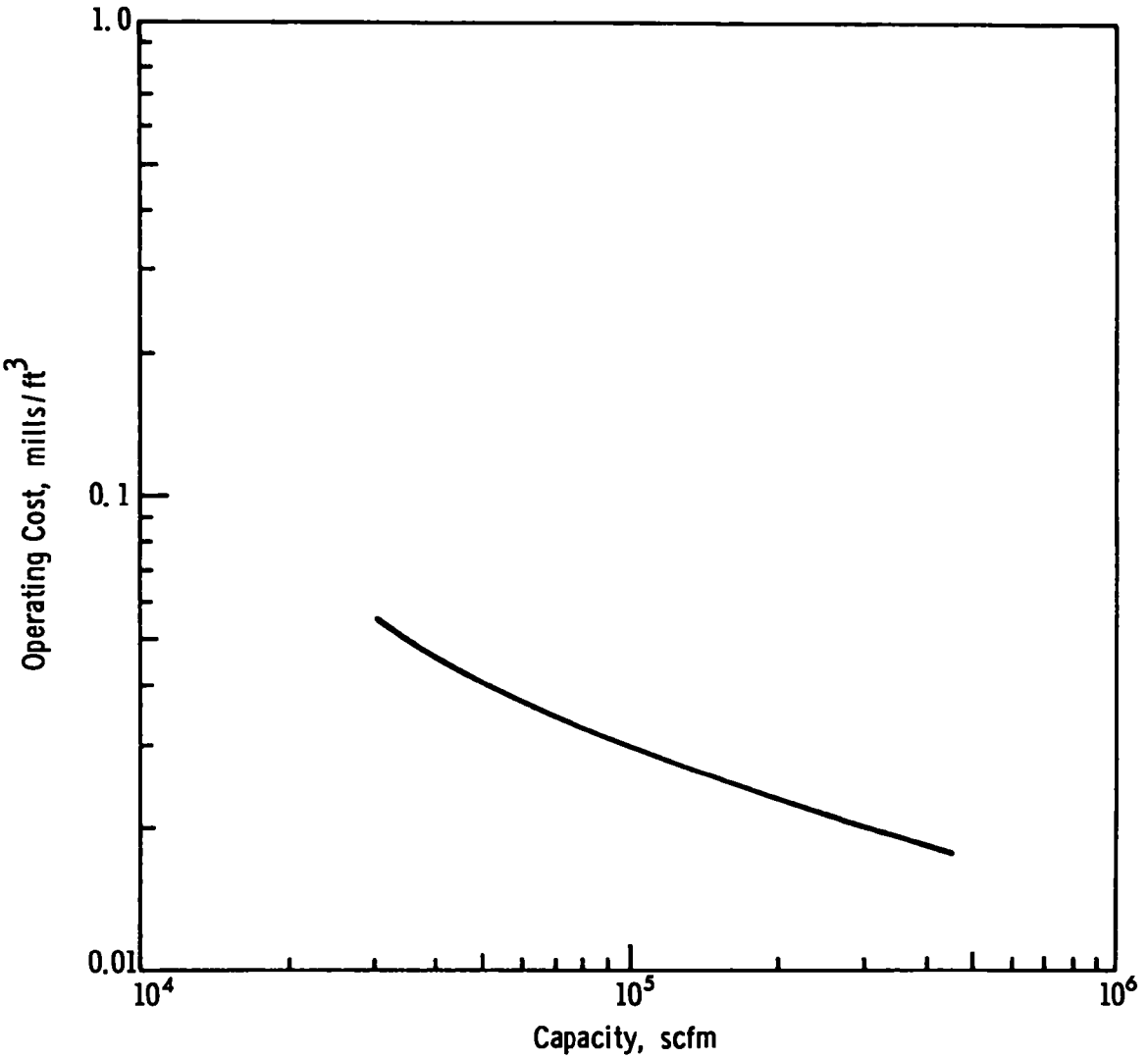

Figure 34. Magnesium Oxide Scrubbing, Operating Cost

advantage is the physical flexibility of the regeneration system. The calciner is capable of accepting multiple feeds from many scrubbers and may be centrally located to accommodate scrubbers on many SO_x emission sources in a refinery.

6.6 OXIDATION SYSTEM

The final process remaining for evaluation differs from the others in that it does not produce a stream of concentrated SO_2 as the product. The product of the catalytic oxidation (CAT-OX) process is a solution of sulfuric acid of approximately 78% concentration.

6.6.1 CAT-OX Catalytic Oxidation

This process has been developed by Monsanto Company, St. Louis, Missouri. A 15 MW (24,000 scfm) pilot unit has been operated in cooperation with Metropolitan Edison Co., Seward, Penn.[81] A 100 MW (238,000 scfm) commercial size demonstration unit is being operated at the Illinois Power Company's Wood River No. 4 unit. It was financed jointly by the Control Systems Division of the Office of Research and Monitoring of the EPA and the Illinois Power Company. It began operation on 4 September 1972.[120] The first commercial operation of integrated CAT-OX units is estimated to occur in July 1977. Start-up and operation of a commercial plant with a reheat alternative could be as early as January 1975.[81]

6.6.1.1 Process Description

Two flow diagrams, Figure 35 and 36, for the CAT-OX process are presented. The first is for low temperature (310°F) flue gas and the second is for high temperature (850°F) flue gas.

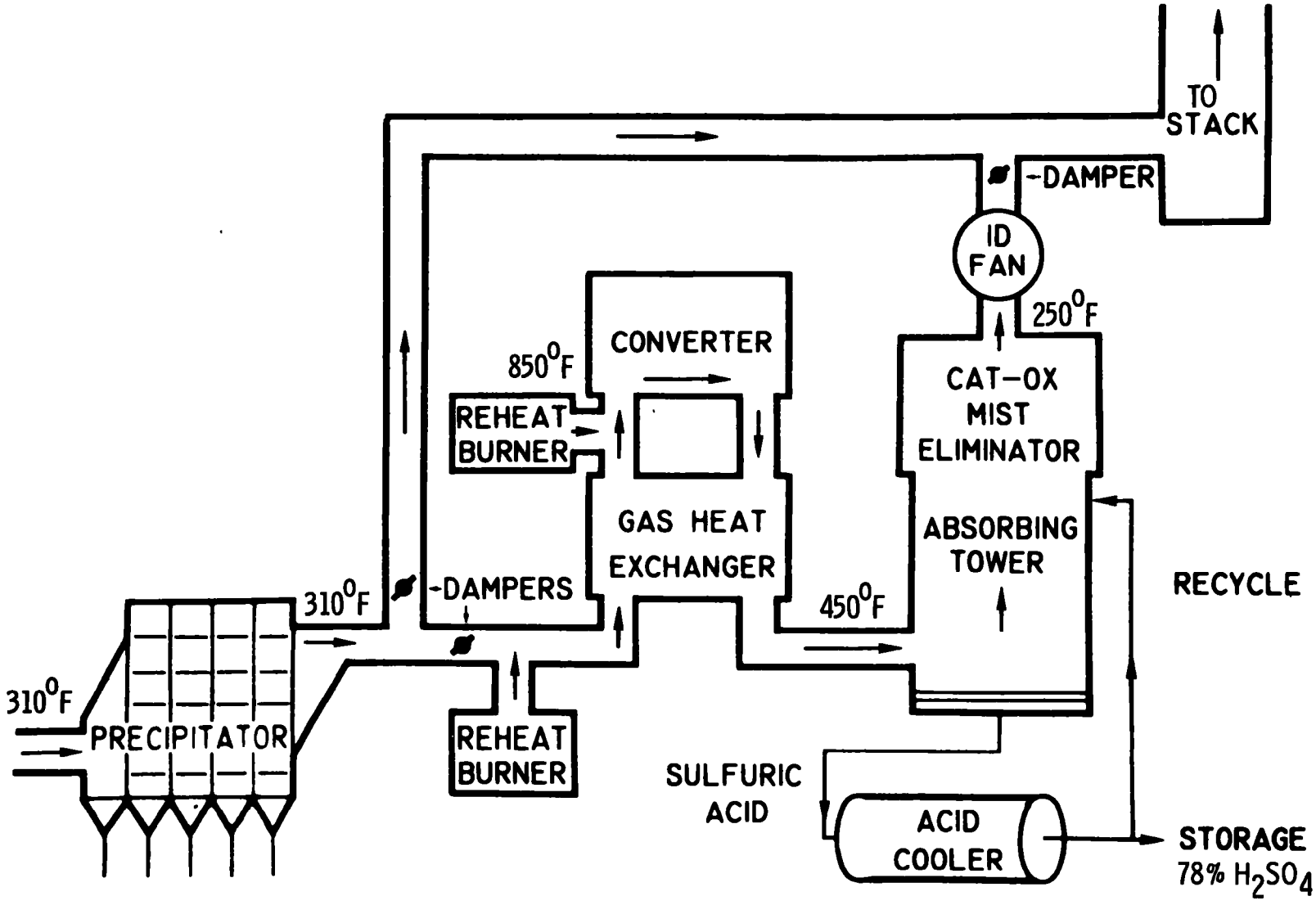

Figure 35. CAT-OX Flow Diagram - Flue Gas Reheat System

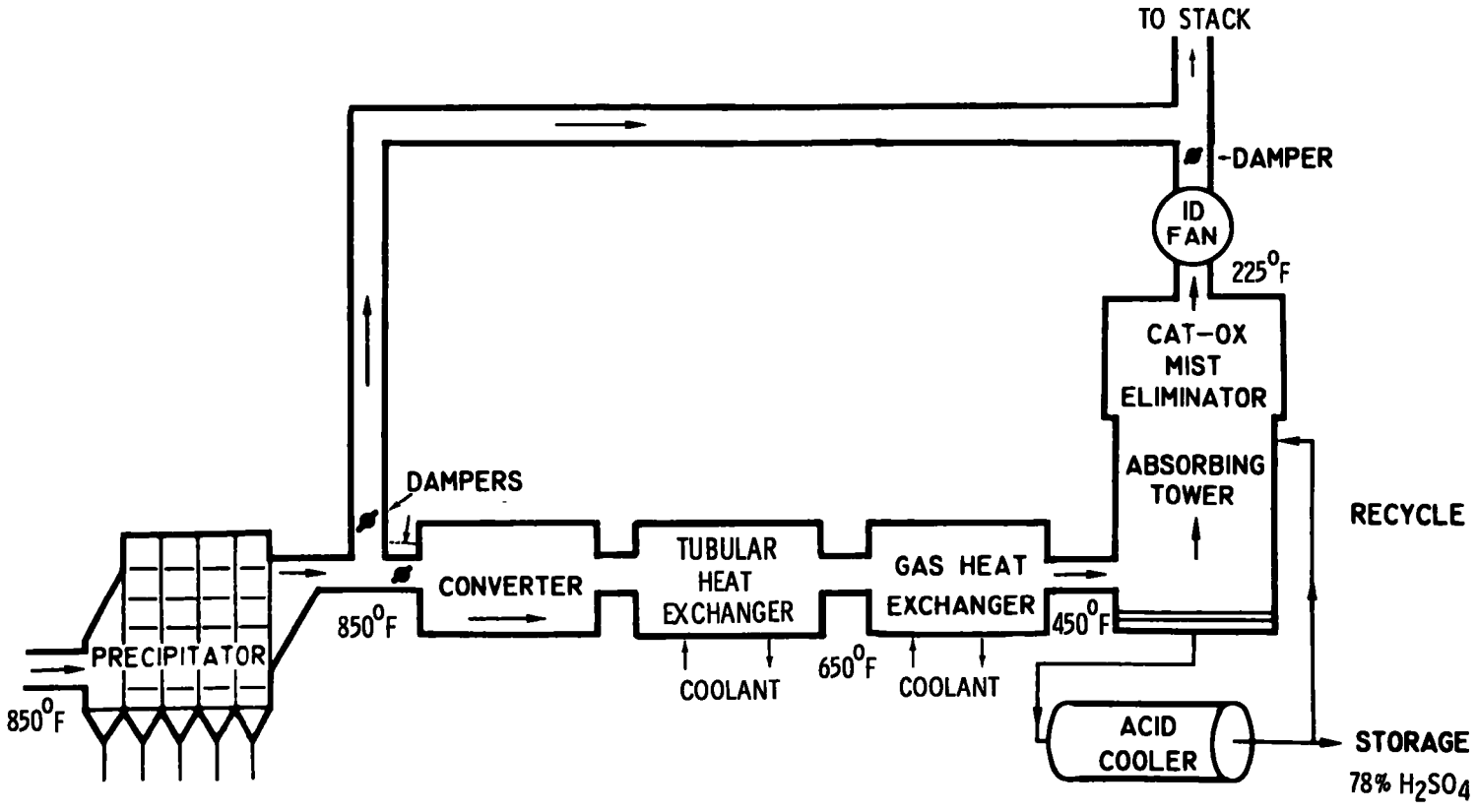

Figure 36. CAT-OX Flow Diagram - High Temperature System

The catalytic converter of the CAT-OX process operates at 850°F. To treat gases having lower temperatures requires supplemental flue gas heating, Figure 35. Essentially particulate-free gas (gas free of particulates larger than 2-5 microns) is required for optimal operation of the catalytic converter. A 0.005 grain/cu ft loading of carbonaceous matter creates serious problems of plugging and poisoning the catalyst bed. Consequently, very efficient electrostatic precipitators removing in excess of 99.5% of the particulates are part of the CAT-OX system.

Hot and clean gas is passed through the converter where the sulfur dioxide is catalytically oxidized on vanadium pentoxide catalyst to sulfur trioxide according to the reaction:

$$2SO_2 + O_2 \longrightarrow 2SO_3 + 2H_2O \longrightarrow 2H_2SO_4 \qquad (34)$$

The converter is designed so that the catalyst bed can be emptied onto a conveyor system for transport to a cleaning process, after which the cleaned catalyst is conveyed back to the converter. About 2.5% of the catalyst mass is lost during each cleaning process, which is anticipated to occur about four times per year. About 48 hours is required for each catalyst cleaning.

The treated flue gas, now containing SO_3, passes to a Ljungstrom-type heat exchanger where about 400°F sensible heat is recovered to heat the incoming untreated flue gas. As a result of heat recovery in this exchanger, the overall need for fuel usage is to add 150°F of sensible heat. The temperature of the gas is maintained well above the dew point. Normal flue gas leakage in a regenerative heat exchanger of this type will allow about 5% [120] of the flue gas to by-pass the unit, thereby reducing the overall efficiency of SO_2 removal to approximately 85%.

The flue gas is further cooled in a packed-bed absorbing tower, which operates in conjunction with an external shell and tube heat exchanger. During cooling, the H_2O and SO_3 combine to form sulfuric acid, which is subsequently condensed. The tower brings a cool stream of sulfuric acid into direct contact with the rising hot flue gas. Exit gas leaves the packed section at about 250°F while hot acid is constantly being removed from the bottom of the tower and cooled in the external heat exchanger.

Very fine mist particles of sulfuric acid are formed in the gas as it is cooled in the absorbing tower. These mist particles in the flue gas are removed along with some entrained droplets of circulating acid from the tower by the Brink® mist eliminator system. The packed section of the absorbing tower and the mist eliminators are contained within one vessel. The flue gas leaving the mist eliminator to enter the exit stack contains approximately 25 ppm of SO_3 which is less than the amount normally emitted from the combustion process.

Raw Materials and Chemicals

Annually 10% of catalyst requires replacement. Some sources list this expense as a raw material, others as a part of the maintenance cost. We have identified it as raw material.

Physical Size Requirements

	CAT-OX Requirements per 1000 bpsd FCC Capacity[122]	
	High Temperature Flue Gas	Flue Gas Reheat
area (sq ft)	186	139
acid storage (60 days) (sq ft)	775	775

Location of Process in Regenerator Downstream Flow Train

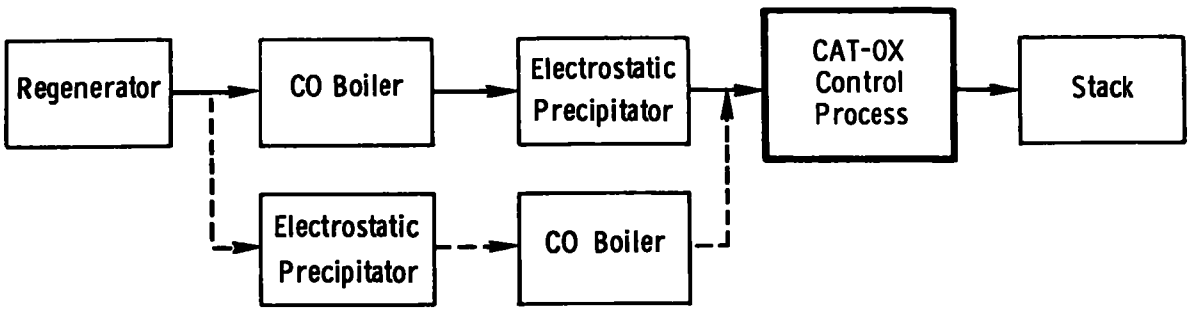

CAT-OX must follow the CO boiler to ensure an O_2/SO_2 ratio of 10:1 for proper operation of the catalytic reactor. This ratio is required to obtain adequate oxidation from SO_2 to SO_3. There are three alternatives of process integration with the FCC equipment depending on flue gas effluent temperature. These are presented below.

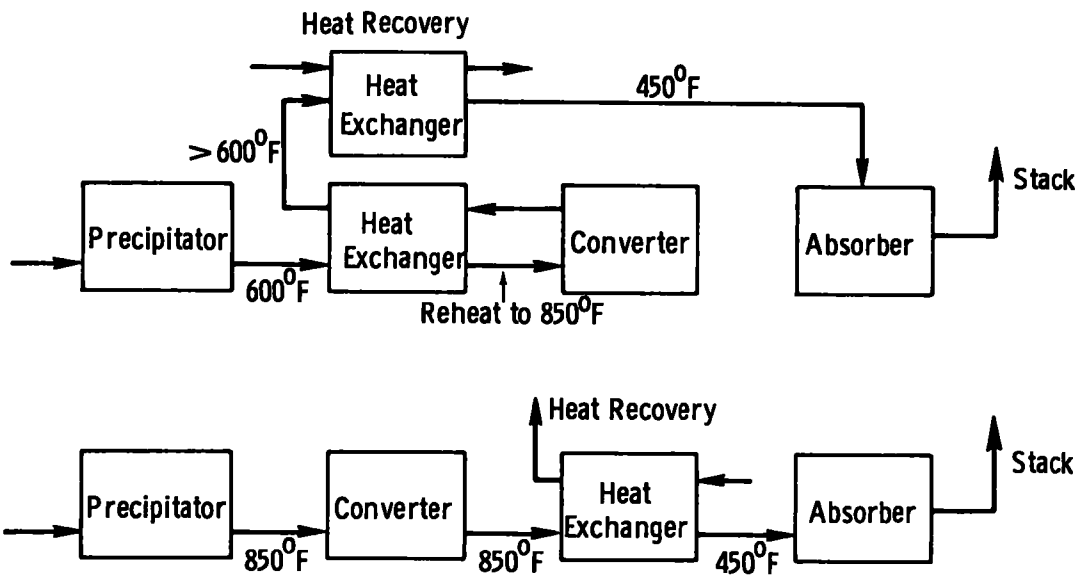

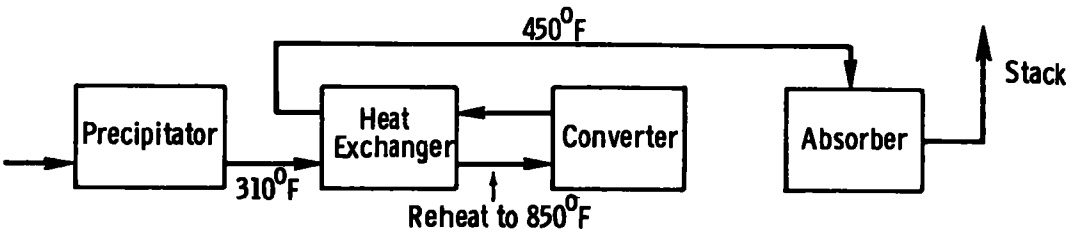

6.6.1.2 Economics

For economic considerations, the flue gas treated will be assumed to be available at 310°F, although the gas temperature after the CO boiler is usually in the range of 485-820°F. An actual temperature would result in less gas reheating if compared with the reheat system, but more gas reheating if compared with the high temperature alternative. Additional assumptions required specifically for CAT-OX include:

Catalyst cost - $41/cu ft[123]

Catalyst life - 5 years[123]

Operating labor - 3 men/shift

The investment and operating costs are shown in Figures 37 and 38. The detailed operating cost estimates are summarized in Tables F19, F20, and F21, Appendix F.

6.6.1.3 Comments

The CAT-OX SO_2 removal process was designed for application to stationary power sources, and extensive study would be required to optimize the process for application to FCC regenerator off-gases.

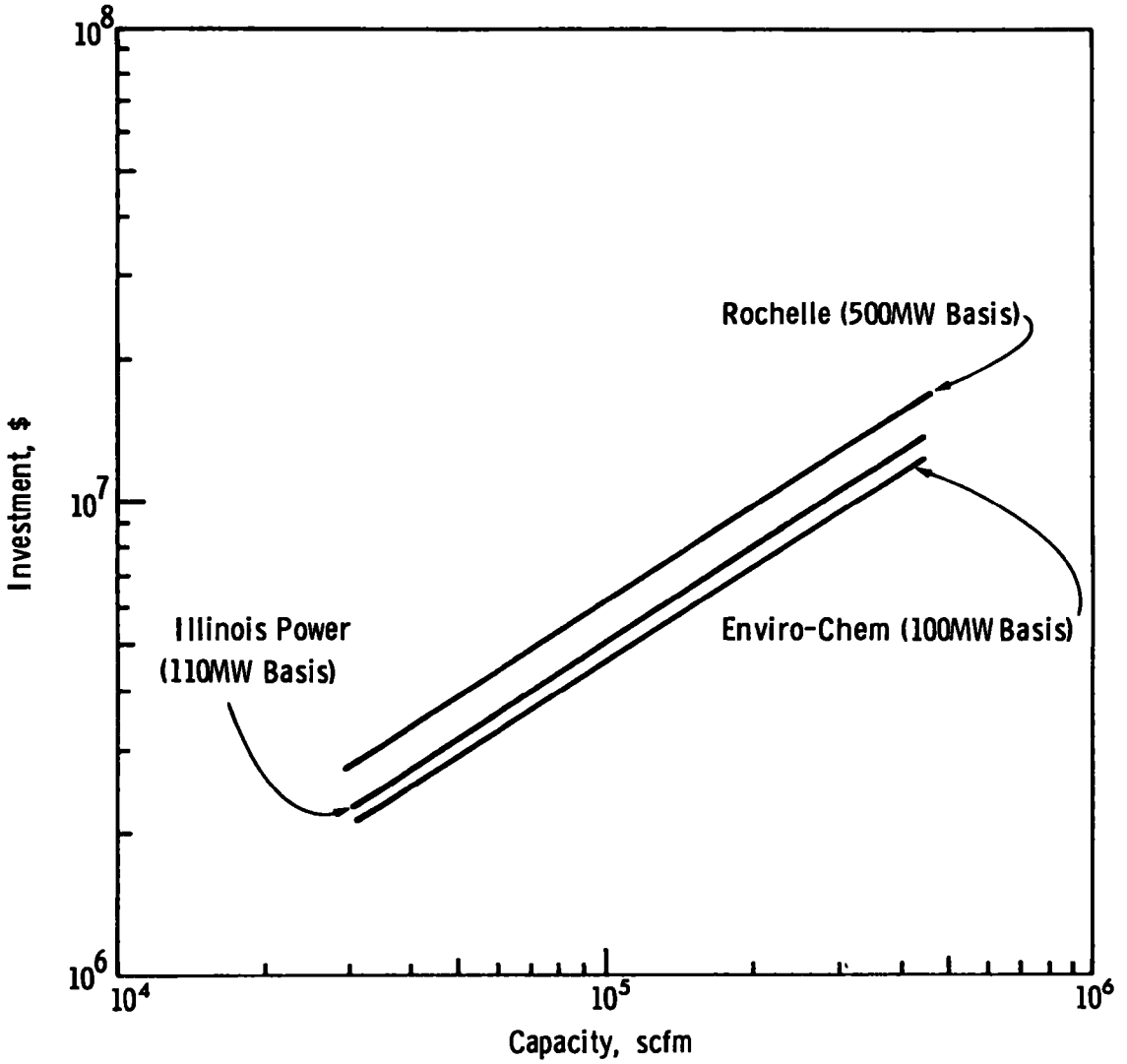

Figure 37. CAT-OX Capital Investment Cost (February 1973)

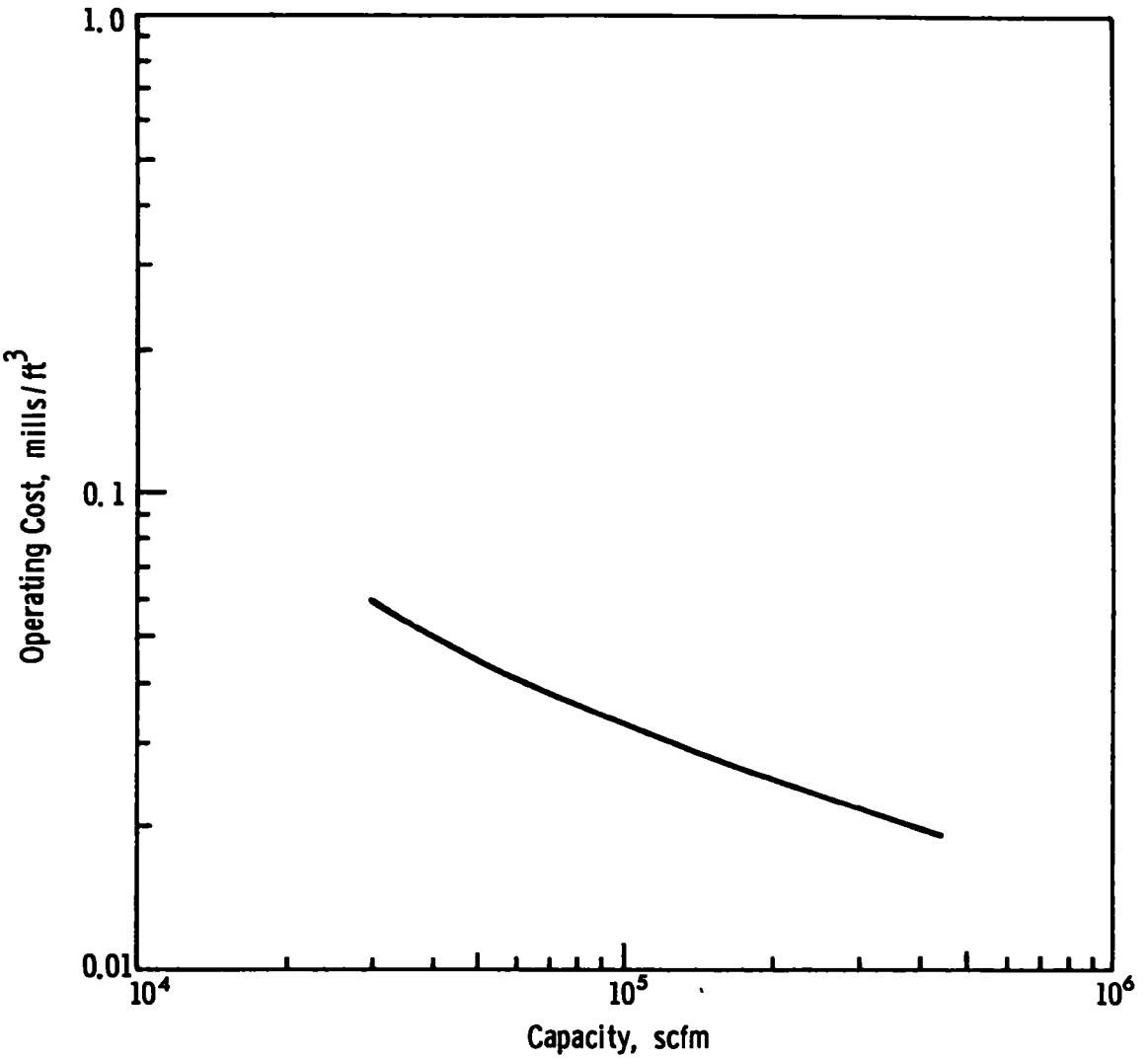

Figure 38. CAT-OX Operating Cost

Monsanto Enviro-Chem Systems, Inc. has contacted refiners and has yet to find a suitable refinery application for CAT-OX. Reasons for this include:

- size of the application - refineries are too small for economical operation.
- CAT-OX produces dirty, low-concentration sulfuric acid not readily usable in a refinery.
- Plugging and poisoning of catalyst due to carbonaceous material not removed by electrostatic precipitator (CAT-OX has not been tested and demonstrated on oil-fired boilers, which would probably produce more carbonaceous material and increase the catalyst poisoning problem.)

REFERENCES

1. Anon., Atmospheric Emissions from Petroleum Refineries, A Guide for Measurement and Control, U.S. Department of Health, Education and Welfare, Public Health Service, Division of Air Pollution, Publication No. 763, 1960.

2. Sussman, V. H., Atmospheric Emissions from Catalytic Cracking Unit Regenerator Stacks, Report No. 4, Los Angeles County Air Pollution Control District, June, 1957.

3. Danielson, J. A., Air Pollution Engineering Manual, Air Pollution Control District, County of Los Angeles, U.S. Department of Health, Education, and Welfare, Public Health Service, Bureau of Disease Prevention Environmental Control, National Center for Air Pollution Control, Cincinnati, Ohio 1967.

4. Shea, E. P., Source Testing - EPA Task No. 8, Standard Oil Company, Richmond, California, Midwest Research Institute, Kansas City, Missouri 64110, EPA Contract No. 68-02-0228, April 1972.

5. Schulz, E. J., Hillenbrand, L. J., Engdahl, R. B., Source Sampling of Fluid Catalytic Cracking Plant (Electrostatic Precipitators and CO boiler) of Standard Oil of California, Richmond, California, Contract No. 68-02-0230, Task Order No. 3, Battelle, Columbus Laboratories, Columbus, Ohio, July, 1972.

6. Schulz, E. J., Hillenbrand, L. J. Engdahl, R. B., Source Sampling of Fluid Catalytic Cracking, CO Boiler, and Electrostatic Precipitators at the Atlantic Richfield Company, Houston, Texas, Contract No. 68-02-0230, Task Order No. 3 Battelle, Columbus Laboratories, Columbus, Ohio, July, 1972.

7. Anon., Compilation of Air Pollutant Emission Factors (Second Edition), U. S. Environmental Protection Agency, Office of Air and Water Programs, Office of Air Quality Planning and Standards, Research Triangle Park, North Carolina, April, 1973.

8. Cavender, J. H., Kircher, D. S., Hoffman, A. J., Nationwide Air Pollutant Emission Trends 1940-1970, U. S. Environmental Protection Agency, Office of Air and Water Programs, Office of Air Quality Planning and Standards, Research Triangle Park, North Carolina, January, 1973.

9. Cantrell, A., U. S. Refineries: where, capacities, types of processing, The Oil and Gas Journal, April 2, 1973.

10. Anon., Petroleum Facts and Figures 1971 Edition, American Petroleum Institute, Washington, D. C., 20006, 1971.

11. Prescott, J. H., Refineries: The Dam Breaks, Chemical Engineering, August 6, 1973.

12. Anon., Parsons Gets Pact for 200,000 - b/d Louisiana Refinery, The Oil and Gas Journal, September 24, 1973.

13. Takaoka, S., Petroleum Desulfurization, A private report by the Process Economics Program, Stanford Research Institute, Report No. 47, January 1969.

14. Robson, F. L., Giramonti, A. J., Lewis, G. P., Gruber, G., Technological and Economic Feasibility of Advanced Power Cycles and Methods of Producing Nonpolluting Fuels for Utility Power Stations, United Aircraft Research Laboratories, December 1970.

15. Anon., 1972 Refining Processes Handbook, Hydrocarbon Processing, September 1972.

16. Bland, W. F., Davidson, R. L., Petroleum Processing Handbook, McGraw-Hill Book Company, 1967.

17. Nelson, W. L., Petroleum Refinery Engineering, McGraw-Hill Book Company, Fourth Edition, 1958.

18. Gruse, W. A., Stevens, D. R., Chemical Technology of Petroleum, McGraw-Hill Book Company, Third Edition, 1960.

19. Anon., Progress in Petroleum Technology, Number 5 of the Advances in Chemistry Series, American Chemical Society, August, 1951.

20. Conser, R. E., The Shell Flue Gas Desulfurization Process: How Does It Stack Up? Paper Presented at the Conference on Control of Gaseous Sulphur Compound Emission, University of Salford, Salford, England, April 9-12, 1973.

21. Anon., Crude Petroleum, Petroleum Products, and Natural-Gas Liquids: 1971, U. S. Department of the Interior, Bureau of Mines, Washington D. C., 20240, December 20, 1972.

22. Anon., Availability of Heavy Fuel Oils by Sulfur Levels, U. S. Department of the Interior, Bureau of Mines, Washington D. C. 20240, June 7, 1972.

23. Anon., Burner Fuel Oils, 1971, Ella Mae Shelton Bartlesville Energy Research Center, Bureau of Mines, U. S. Department of Interior, Bartlesville, Oklahoma, August 1971.

24. Gary, J. H. Schweyer, H. E., Crude Source and Desulfurization, Petroleum Refiner, September, 1953.

25. Sittig, M. Catalytic Cracking Techniques in Review, Petroleum Refiner, September, 1952.

26. Wunderlich, O. A., Emerson Ivey, F., Jr., Charts Make Cat Cracker Balance Easier, Petroleum Refiner, February, 1958.

27. Private Communication, Universal Oil Products.

28. Private Communication, M. W. Kellogg Co.

29. Private Communication, Brown and Root, Inc.

30. Davidson, R. C., Cracking Sulfur Stocks with Natural Catalyst, Petroleum Refiner, September, 1947.

31. Healy, J. W., Hertwig, W. R., Sulfur Distribution in Catalytic Cracking, Significance of Process Variables, Paper presented before the Division of Petroleum Chemistry, American Chemical Society, Atlantic City Meeting, September 18-23, 1949.

32. Conn, A. L., Brackin, C. W. Cracking of High Sulfur Stocks, Use of Steam with Natural Catalyst, Industrial and Engineering Chemistry, August 1949.

33. Wollaston, E. G., Forsythe, W. L., Vasalos, I. A., Sulfur Distribution in FVU Products, The Oil and Gas Journal, August 2, 1971.

34. Fowle, M. J., Bent, R. D., Where Does the Sulfur Go? Petroleum Refiner, November, 1947.

35. Private Communication, American Oil Co.

36. Private Communication, Monsanto Company

37. Jurjew, J. K., Katalytische Umwandlungen Von Heterocyclischen Verbindungen, II Mitteil: Uberfuhrung Von α-Methyl-Furan In α-Methyl-Pyrrol Und α-Methyl-Thiophen, III Mitteil: Reziproke Umwandlungen Der Einfachsten Funfgliedrigen Heterocyclen. Chemische Berichte, 69B, 1002-1004, 1936.

38. Yur'ev, Yu.K., Tronova, V. A., Catalytic Transformations of Heterocyclic Compounds XV. The Stability of the Catalyst and Optimum Conditions in the Transformation of Tetrahydrofuran into Pyrolidine and Thiophene and in that of Furan into Thiophene, J. Gen. Chem. (U.S.S.R) 10, 31-4 (1940)

39. Anon., Amoco Oil to Modify Its Cat Crackers, The Oil and Gas Journal, April 2, 1973.

40. Magee, J. S., Blazek, J. J., Ritter, W. R., Catalyst Developments in Catalytic Cracking, The Oil and Gas Journal, July 23, 1973.

41. Thomas, C. L., Catalytic Processes and Proven Catalysts, Academic Press, 1970.

42. Eberly, P. E., Jr., Kimberlin, C. N., Jr., Miller, W. H., Drushel, H. V., Core Formation on Silica-Alumina Cracking Catalysts, Industrial and Engineering Chemistry, Process Design and Development, April 1966.

43. Burke, P. D., Catalysts - Part 1, Chemical Week, August 17, 1963.

44. Burke, P. D., Catalysts - Part 2, Chemical Week, August 24, 1963.

45. Dean Edgar, M., Thermal Shock no Problem for Fresh FCC Catalyst, The Oil and Gas Journal, September 24, 1973.

46. Mills, G. A., Ashwill, R. E., Gresham, T. L., To Evaluate Cracking Catalysts, Hydrocarbon Processing, September 1967.

47. Nelson, W. L., What Is Good Catalyst, The Oil and Gas Journal, April 28, 1949.

48. U. S. Patent 2,724,686

49. U. S. Patent 2,587,554

50. U. S. Patent 2,628,157

51. U. S. Patent 2,586,705

52. U. S. Patent 2,497,940

53. U. S. Patent 2,496,356

54. U. S. Patent 2,467,850

55. U. S. Patent 2,449,617

56. U. S. Patent 2,487,132

57. U. S. Patent 2,755,231

58. U. S. Patent 2,854,319

59. Sachanen, A. N., The Chemical Constituents of Petroleum, Reinhold Publishing Corporation, 1945.

60. Sweeney, W. J., Petroleum and Its Products, Twenty-Fourth Annual Priestly Lectures, The Pennsylvania State College, Phi Lambda Upsilon and The Department of Chemistry, State College, Pennsylvania, April, 1950.

61. Private Communication, Gulf Oil Co.

62. Henke, A. M., Stauffer, H. C., Carr, N. L., Molecular Sieves Regenerate Well, Hydrocarbon Processing, May 1962.

63. Baker, R. W., Maher, P. K., Blazek, J. J., Sieves Make Good Cracking Catalysts, Hydrocarbon Processing, February 1968.

64. Private Communication, Davison Chemical

65. Conser, R. E., Management of Sulfur Emissions The UOP 1973 Technology Conference, September 1973.

66. Blazek, J. J., Gains From FCC Revival Evident Now, The Oil and Gas Journal, October 8, 1973.

67. Monsanto Files

68. Private Communication with Struther-Wells Corp.

69. Peters, M. S., Timmerhaus, K. D., Plant Design and Economics for Chemical Engineers, McGraw-Hill Company, 1968.

70. Elkin, H. F., Constable, R. A., Source/Control of Air Emissions, Hydrocarbon Processing, October 1972.

71. Hyne, J. B., Methods for Desulfurization of Effluent Gas Streams, The Oil and Gas Journal, August 28, 1972.

72. Draemel, D. C., Regeneration Chemistry of Sodium-Based Double-Alkali Scrubbing Process, NTIS No. PB-220077, March 1973.

73. Calvert, S., Goldshmid, J., Leith, D., Mehta, D., Wet Scrubber System Study, NTIS No. PB-213017, July 1972.

74. Calvin, E. L., A Process Cost Estimate for Limestone Slurry Scrubbing of Flue Gas, Part II - Detailed Estimate Sheets, NTIS No. PB-219017, January 1973.

75. Anon., Detailed Cost Breakdown for Selected Sulfur Oxide Control Processes, M. W. Kellogg Company, NTIS No. PB-209 024, March 1972.

76. Anon., Applicability of SO_2- Control Processes to Power Plants, M. W. Kellogg Company, NTIS No. PB-213421, November 1972.

77. Beers, W. D., Characterization of Claus Plant Emissions, NTIS No. PB-220376, April 1973.

78. Anon., Cost Nomographs of Selected Sulfur Dioxide Abatement Methods, Hittman Associates, Inc., NTIS No. PB-207108, January 1972.

79. Byers, R. L., Licht, W., Processes for Control of Sulfur Oxide Emissions, AIChE, 1972.

80. Anon., Removal of SO_2 from Flue Gas, AVCO Space Systems Division, NTIS No. PB-177492, November, 1967.

81. Anon., Summaries of Industrial Processes for Treatment of Sulfur and Nitrogen Containing Effluent Gases, Prepared for Office of Air Programs, EPA, by Process Research, Inc., June, 1972.

82. Anon., Sulfur & SO_2 Development, CEP Technical Manual, AIChE, 1971.

83. McGlamery, G. G., Torstrick, R. L., Simpson, J. P., Phillips, Jr., J. F., Conceptual Design and Cost Study, Sulfur Oxide Removal from Power Plant Stack Gas, Magnesia Scrubbing - Regeneration: Production of Concentrated Sulfuric Acid, EPA-R2-73-244, May 1973.

84. Fogel, M. E., et al., Comprehensive Economic Cost Study of Air Pollution Control Costs for Selected Industries and Selected Regions, NTIS No. PB-191054, February 1970.

85. Anon., Removal of Sulfur Dioxide from Waste Gases by Reduction to Elemental Sulfur, Princeton Chemical Research, Inc., NTIS No. PB-200071, July 1969.

86. Graefe, A. F., et al., The Development of New and/or Improved Aqueous Processes for Removing SO_2 from Flue Gases, Volume II, NTIS No. PB-196781, October 1970.

87. Gressingh, L. E., et al., Applicability of Aqueous Solutions to the Removal of SO_2 from Flue Gases, Final Report, Volume I, NTIS No. PB-196780, October 1970.

88. Anon., Evaluation of SO_2 - Control Processes, M. W. Kellogg Company, NTIS No. PB-204711, October 1971.

89. Slack, A. V., Sulfur Dioxide Removal From Waste Gases 1971, Noyes Data Corporation, 1971.

90. Nonhebel, G., Processes for Air Pollution Control, The Chemical Rubber Co., 1972.

91. Anon., Sulphur Emission Control - The Choice of Process Stays Wide Open, Process Engineering, July 1973.

92. Anon., 1972 NPRA Question and Answer Session on Refining Technology, The Petroleum Publishing Company, 1973.

93. Anon., Processing Discussed by NPRA Panel, Hydrocarbon Processing, March 1967.

94. Private Communication, Westvaco Corporation.

95. Dautzenberg, F. M., Nader, J. E., Van Ginneken, A. J. J., Desulfurization Process: Shell's Flue Gas Desulfurization Process, Chemical Engineering Progress, August 1971.

96. Jones, H. R., Pollution Control in the Petroleum Industry, Pollution Technology Review No. 4, Noyes Data Corporation, Park Ridge, New Jersey, 1973.

97. Collins, J. J., Fornoff, L. L., Miller, W. C., Lovell, D. C., The PuraSiv-S Unit Goes On-Stream at Coulton, Paper presented at the 66th Annual APCA Meeting, Chicago, Illinois, June 24-28, 1973.

98. Miller, W. C., Adsorption Cuts SO_2, NO_x, Hg, Chemical Engineering, August 6, 1973.

99. Private Communication, Union Carbide Corporation.

100. Private Communication, EPA Control Systems Laboratory.

101. Private Communication, Davy Powergas, Inc.

102. Schneider, R. T., Earl, C. B., Application of The Wellman-Lord SO_2 Recovery Process to Stack Gas Desulfurization, Paper presented at the Flue Gas Desulfurization Symposium, New Orleans, Louisiana, May 14-17, 1973.

103. Earl, C. B., Potter, B. H., The Wellman-Lord Sulfur Dioxide Recovery Process, Paper presented at the Industrial Coal Conference, University of Kentucky, April 18, 1973.

104. Edmisten, N. G., Bunyard, F. L., A Systematic Procedure for Determining the Cost of Controlling Particulate Emissions from Industrial Sources, Journal of the Air Pollution Control Association, July 1970.

105. Guthrie, K. M., Data and Techniques for Preliminary ... Capital Cost Estimating, Chemical Engineering, March 24, 1969.

106. Anon., W -L SO_2 Pollution Control, Publication of the Wellman-Power Gas, Inc., 1973.

107. Anon., Tail-Gas Desulfurization Operations Successful, The Oil and Gas Journal, February 7, 1972.

108. Anon., Combined SO_2 Removal Process Set for Testing, The Oil and Gas Journal, February 5, 1973.

109. Anon., SO_2 Recovery by Wellman-Lord, Company Publication, 1970.

110. Rochelle, G. T., Economics of Flue Gas Desulfurization, Paper presented at the Flue Gas Desulfurization Symposium, New Orleans, Louisiana, May 14-17, 1973.

111. Rochelle, G. T., A Critical Evaluation of Processes for the Removal of SO_2 from Power Plant Stack Gas, Paper presented at the 66th Annual Meeting of the APCA, June 24-28, 1973.

112. Burchard, J. K., Rochelle, G. T., Schofield, W. R. Smith, J. O., Some General Economic Considerations of Flue Gas Scrubbing for Utilities, Control Systems Division, Environmental Protection Agency, National Environmental Research Center, Research Triangle Park, North Carolina, October 1972.

113. Koehler, G. R., Operational Performance of the Chemico Basic Magnesium Oxide Systems at the Boston Edison Company, Part I, Paper presented at Flue Gas Desulfurization Symposium, New Orleans, Louisiana, May 14-17, 1973.

114. Quigley, C. P., Operational Performance of the Chemico Magnesium Oxide System at the Boston Edison Company, Part II, Paper presented at Flue Gas Desulfurization Symposium, New Orleans, Louisiana, May 14-17, 1973.

115. McGlamery, G. G., Magnesia Scrubbing Paper presented at Flue Gas Desulfurization Symposium, New Orleans, Louisiana, May 14-17, 1973.

116. Anz, B. M., Thompson, Jr., C. C., Pinkston, J. T., Design and Installation of a Prototype Magnesia Scrubbing Installation, United Engineers and Constructors, Inc., Philadelphia, Pennsylvania, May 15, 1973.

117. Maxwell, M. A., Koehler, G. R., The Magnesia Slurry SO_2 Recovery Process Operating Experience with a Large Prototype System, Paper presented at AiChE 65th Annual Meeting, New York, New York, November 26-30, 1972.

118. Shah, I. S., MgO Absorbs Stackgas SO_2, Chemical Engineering, June 26, 1972.

119. Anon., Papers on Zinc Oxide Slurry Scrubbing compiled by Tennessee Valley Authority, Division of Chemical Development, Applied Research Branch, Muscle Shoals, Alabama.

120. Schultz, E. A., Miller, W. E., The Cat-Ox Project at Illinois Power, Paper presented at the Electrical World Technical Conference, Chicago, Illinois, October 25-26, 1972.

121. Miller, W. E., The Cat-Ox Project at Illinois Power, Paper presented at Flue Gas Desulfurization Symposium, New Orleans, Louisiana, May 13-17, 1973.

122. Anon., Air Pollution Control for Electric Utilities, Cat-Ox Systems by Monsanto Enviro-Chem Systems, Inc., Monsanto publication, 1970.

123. Opferkuch, R. E., Mehta, S. M., Konicek, M. G., Zanders, D. L., Applicability of Catalytic Oxidation to the Development of New Processes for Removing SO_2 from Flue Gases, Vol. II, Monsanto Research Corporation, January 1971.

124. Conser, R. E., Anderson, R. F., New Tool Combats, SO_2 Emissions, The Oil and Gas Journal, October 29, 1973.

125. U. S. Patent 3,061,421

126. U. S. Patent 2,637,633

APPENDIX A

CRACKING CATALYSTS AND THEIR PRODUCERS

A. CLASS 1. ACID-TREATED NATURAL ALUMINOSILICATES AND SEMISYNTHETICS

American Cyanamid Company

Aerocat 2000: a semisynthetic fluid catalyst containing 35% Al_2O_3. The ABD is 0.60, the surface area 300 m^2gm^{-1}, and the pore volume 0.50 cm^3gm^{-1}.

Davison Chemical Division of W. R. Grace & Co.

Grade SS: a semisynthetic fluid catalyst containing 32% Al_2O_3. It is supplied in two different pore volume grades: 0.58 cm^3gm^{-1} (ABD 0.51) and 0.70 cm^3gm^{-1} (ABD 0.47). The surface area of the latter is 280 m^2gm^{-1}.

Filtrol Corporation

Grade 58: 17.5% Al_2O_3, fluid. The ABD is 0.65, the surface area 280-300 m^2gm^{-1}, and the pore volume 0.36 cm^3gm^{-1}.

Grade 62: 17.5% Al_2O_3 as 3/16 x 3/16 inch pellets. The ABD is 0.8, the surface area 280-300 m^2gm^{-1}, and the pore volume 0.36 cm^3gm^{-1}.

Grade 63: 38% Al_2O_3 as 3/16 x 3/16 inch pellets. The ABD is 0.8, the surface area 125-135 m^2gm^{-1}, and the pore volume 0.27 cm^3gm^{-1}.

Grade 80: 38% Al_2O_3, fluid. The ABD is 0.73, the surface area 125-135 m^2gm^{-1}, and the pore volume 0.27 cm^3gm^{-1}.

Grade 100: 51% Al_2O_3 microspheres. The ABD is 0.80, the surface area 105 m^2gm^{-1}, and the pore volume 0.37 cm^3gm^{-1}.

Grade 110: pellets.

Grade 110: spherical pellets.

Houdry Process and Chemical Company

Kao-Pellets: approximately 3/16 x 3/16 inch. The ABD is 0.77 and the surface area 90-100 m^2gm^{-1}

Kao-Spheres: 45% Al_2O_3 ca. 0.17 inch in diameter. The ABD is 0.77 and the surface area 90-100 m^2gm^{-1}.

Nalco Chemical Company

Nalcat 783: a semisynthetic fluid catalyst, 33% Al_2O_3. The ABD is 0.50, the surface area 280 m^2gm^{-1}, and the pore volume 0.65-0.70 cm^3gm^{-1}.

B. CLASS 2. AMORPHOUS SYNTHETIC SILICA-ALUMINA, INCLUDING SILICA-MAGNESIA

American Cyanamid Company

Aerocat: 13% Al_2O_3, fluid. The ABD is 0.49 and the pore volume 0.75 cm^3gm^{-1}.

Aerocat Triple A: 25% Al_2O_3, fluid. The ABD is 0.43 and the pore volume 0.89 cm^3gm^{-1}.

Aerocat 3C-12: 3% MgO in low alumina, fluid.

Aerocat 3C-20: 3% MgO in high alumina, fluid.

Davison Chemical Division of W. R. Grace & Company

Low Alumina: 13% Al_2O_3 fluid. The ABD is 0.43 and the pore volume 0.77 cm^3gm^{-1}.

High Alumina: 28% Al_2O_3, fluid, in three different pore volumes: 0.70 cm^3gm^{-1} (ABD 0.46), 0.78 cm^3gm^{-1} (ABD 0.43), 0.88 cm^3gm^{-1} (ABD 0.39).

SM-30: 27.5% MgO and 3% F, fluid. The ABD is 0.49 and the pore volume 0.72 cm^3gm^{-1}.

Houdry Process and Chemical Company

S-46: 13% Al_2O_3, tablets. The ABD is 0.62, the surface area 280-315 m^2gm^{-1}, and pore volume 0.61 cm^3gm^{-1}.

Mobil Chemical Company

Durabead 1: 10% Al_2O_3, spheres (beads).

Nalco Chemical Company

Nalcat Low Alumina: 13% Al_2O_3, fluid. The ABD is 0.40, the surface area 520 m^2gm^{-1}, and the pore volume 0.80-0.85 cm^3gm^{-1}

Nalcat High Alumina: 25% Al_2O_3, fluid. The ABD is 0.40-0.44, the surface area 440 m^2gm^{-1}, and the pore volume 0.8-0.9 cm^3gm^{-1}.

Universal Oil Products Company

Type FC-2: 13% Al_2O_3, fluid.

Type FC-3: 25% Al_2O_3, fluid.

C. CLASS 3. CRYSTALLINE SYNTHETIC SILICA-ALUMINA COMBINATIONS

American Cyanamid Company

Aerocat S-4: contains rare earth exchanged "Y" type molecular sieve in a semisynthetic matrix of 33% Al_2O_3 content, fluid. The ABD is 0.53, the surface area 330 m^2gm^{-1}, and the pore volume 0.57 cm^3gm^{-1}.

Aerocat TS-150: contains rare earth exchanged "Y" type molecular sieve in a matrix of synthetic silica-alumina (15% Al_2O_3), fluid. The ABD is 0.49, the surface area 600 m^2gm^{-1} and the pore volume 0.65 cm^3gm^{-1}

Aerocat TS-170 and TS-260: contain rare earth exchanged "Y" type molecular sieve in a semisynthetic matrix with approximately 33% Al_2O_3 content, fluid. The ABD is 0.55 and the pore volume 0.58 cm^3gm^{-1}.

Davison Chemical Division of W. R. Grace & Co.

XZ-15: 13% Al_2O_3, fluid. The ABD is 0.40, the surface area 500 m^2gm^{-1}, and the pore volume 0.88 cm^3gm^{-1}

XZ-25: 36% Al_2O_3, fluid. The ABD is 0.5, the surface area 340 m^2gm^{-1} and the pore volume 0.60 cm^3gm^{-1}.

XZ-36: 36% Al_2O_3, fluid. The ABD is 0.55 and the pore volume 0.55 cm^3gm^{-1}.

XZ-40: fluid.

Filtrol Corporation

Grade 800: microspheres, 48% Al_2O_3. The ABD is 0.69, the surface area 210 m^2gm^{-1}, and the pore volume 0.39 cm^3gm^{-1}.

Grade 810: pellets.

Houdry Process and Chemical Company

HZ-1: pellets.

Mobil Chemical Company

Durabead 6B and Durabead 8: as spheres (beads); D-5 and D-7: Fluid.

Nalco Chemical Company

KSF Series: "X" type molecular sieve in a matrix, fluid.

KSG Series: "Y" type molecular sieve in a matrix, fluid.

ND-2: low surface area, "Y" type molecular sieve in a matrix, fluid.

APPENDIX B

PREDICTION OF REGENERATOR OFF-GAS SO_2 CONCENTRATION

An equation has been developed to predict sulfur dioxide concentration in volume parts per million (vppm) in the regenerator flue gas. The variables affecting the sulfur dioxide emissions have been integrated into the equation and include CO_2/CO ratio and sulfur and hydrogen content on spent catalyst coke. The equation has been derived based on the following assumptions:

- No O_2 is present in the regenerator flue gas
- The composition of catalyst coke remains constant over the whole regeneration period
- Air is used for catalyst regeneration

The overall material balance for the catalytic cracker regenerator can be written

$$aC + bH_2 + dS + eO_2 + fN_2 \rightarrow$$
$$gCO + hCO_2 + dSO_2 + bH_2O + fN_2 \qquad \text{(B1)}$$

The following variables have been used in the equation and were defined as follows

$$R = \frac{CO_2}{CO} = \frac{h}{g} \quad \left(\frac{\text{moles carbon dioxide}}{\text{moles carbon monoxide}} \right) \qquad \text{(B2)}$$

$$K = \frac{S}{C} = \frac{d}{a} \quad \left(\frac{\text{moles sulfur}}{\text{moles carbon}} \right) \rightarrow \text{in coke on spent catalyst} \qquad \text{(B3)}$$

$$Q = \frac{H_2}{C} = \frac{b}{a} \quad \left(\frac{\text{moles hydrogen}}{\text{moles carbon}} \right) \rightarrow \text{in coke on spent catalyst} \qquad \text{(B4)}$$

Applying equations (B2), (B3), and (B4) the material balance equation (B1) can be rewritten

$$aC + QaH_2 + KaS + eO_2 + fN_2 \longrightarrow$$

$$gCO + hCO_2 + KaSO_2 + QaH_2O + fN_2 \qquad (B5)$$

Other equations which can be derived from equations (B1) through (B4) include

$$a = g + h = g(1 + h/g) = g(1 + R) \qquad (B6)$$

$$g = \frac{a}{1 + R} \qquad (B7)$$

$$h = R\,\frac{a}{1 + R} \qquad (B8)$$

Substituting the equations (B6), (B7), and (B8) into equation (B5) we obtain

$$aC + QaH_2 + KaS + eO_2 + fN_2 \longrightarrow$$

$$\left(\frac{a}{1+R}\right) CO + R\left(\frac{a}{1+R}\right)CO_2 + KaSO_2 + QaH_2O + fN_2 \qquad (B9)$$

The amount of oxygen in moles required for oxidation of coke can be calculated from the right side of equation (B9)

$$e = 1/2\left(\frac{a}{1+R}\right) + R\left(\frac{a}{1+R}\right) + Ka + 1/2Qa \qquad (B10)$$

Hence, the nitrogen amount can also be determined

$$f = \frac{79}{21}\,e = \frac{79}{21}\left[1/2\left(\frac{a}{1+R}\right) + R\left(\frac{a}{1+R}\right) + Ka + 1/2\ Qa\right] \qquad (B11)$$

Sulfur dioxide concentration in vppm of dry flue gas can be determined from the following equation

$$[SO_2](\text{vppm}) = \frac{d \times 10^6}{g + h + d + f} \qquad (B12)$$

After substituting equations (B3), (B7), (B8), and (B11) into equation (B12) we obtain

$$[SO_2](vppm) = \frac{Ka \times 10^6}{(\frac{a}{1+R}) + R(\frac{a}{1+R}) + Ka + \frac{79}{21}[1/2(\frac{a}{1+R}) + R(\frac{a}{1+R}) + Ka + 1/2Qa]} \quad (B13)$$

After expressing the variables K and Q in weight amounts and cancellation of a terms in equation (B13) we obtain

$$[SO_2](vppm) = \frac{\frac{M}{2.667 \times 10^6}}{1 + \frac{M}{2.667} + 3.762[1/2(\frac{1+2R}{1+R}) + \frac{M}{2.667} + 3L]} \quad (B14)$$

$$\text{where } M = \frac{\text{pounds S}}{\text{pounds C}} = K \times \frac{32 \text{ \#S/mole S}}{12 \text{ \#C/mole C}} = 2.667 \times K \quad (B15)$$

$$\text{and } L = \frac{\text{pounds } H_2}{\text{pounds C}} = Q \times \frac{2 \text{ \#}H_2\text{/mole } H_2}{12 \text{ \#C/mole C}} = 1/6 \times Q \quad (B16)$$

The sulfur and hydrogen content of coke are normally expressed in weight fractions of coke. By converting variables M and L according to equations (B17) and (B18) below

$$M = \frac{S}{1-H-S} \quad (B17)$$

$$L = \frac{H}{1-H-S} \quad (B18)$$

and substituting these equations into equation (B14), the equation in final form is

$$[SO_2](ppm) = \frac{S \times 10^6}{2.667 + 5.015(\frac{2R+1}{R+1})(1-H-S) + 27.429H + 2.095S} \quad (B19)$$

where

S = Weight fraction of sulfur in coke

H = Weight fraction of hydrogen in coke

R = Mole ratio of CO_2 to CO

APPENDIX C

FEEDSTOCK DESULFURIZATION TECHNIQUES

Low Sulfur Fuel Oil Demand

The importance of reducing sulfur content in fuel oil is increasing every year. Comprehensive governmental restrictions on sulfur emissions that result in air pollution restrict the use of fuel containing more than 1% sulfur. Recently, some cities on the east coast of the U.S., where the sulfur problem seems to be the most serious, have adopted a regulation by which domestic and industrial users are limited to fuel oils containing 0.3% sulfur or less. Additionally, no power plants are to be built or expanded after July 1, 1967 unless there is a guaranteed 20-year supply of fuel whose emission will not exceed 0.35 pound of sulfur dioxide per million Btu of heat input. Fuel oil containing 0.3% sulfur is needed to satisfy this requirement.

The present situation with respect to availability of crude oil and low sulfur fuel oil is rather turbulent, vague, and undergoing various political pressures. This situation has produced numerous discussions on the subject of desulfurization in connection with the production of low sulfur fuel oil and reduction of air pollution problems primarily on the east coast of the United States.

It should be noted that the high sulfur content in fuel oil should not be blamed on the U.S. refiner alone. In 1971 the total domestic demand for residual fuel oil amounted to 8.0×10^8 barrels of which 5.6×10^8 barrels were imported.[21] As indicated by Table C-1, these oils contain large amounts of sulfur and are primarily consumed in the eastern United States.

Table C-1 SULFUR CONTENT OF U.S. IMPORTED RESIDUAL FUEL OILS [22] (January-March 1972)

Sulfur Content %	Million Barrels	%
0-0.50	52.2	32.1
0.51-1.00	49.9	30.7
1.01-2.00	22.4	13.8
Over 2.00	38.0	23.4

There are six types of fuel oils marketed in the U.S. Grade 2 and grade 6 fuel oils are used most. Their average sulfur contents in the year of 1971 are shown in Table C-2.

Table C-2 GRADES AND SULFUR CONTENT OF U.S. FUEL OILS (1971)[23]

Fuel Oil Grade	Average Sulfur Content, Weight %	
1	0.07	A distillate oil intended for vaporizing pot-type burners and other burners requiring this grade of fuel.
2	0.24	A distillate oil for general-purpose domestic heating for use in burners not requiring No. 1 fuel oil.
4	0.65	Preheating not usually required for handling or burning.
5 (Light)	1.73	Preheating may be required depending on climate and equipment.
5 (Heavy)	1.42	Preheating may be required for burning and, in cold climates, may be required for handling.
6	1.59	Preheating required for burning and handling.

Table C-2 shows that the 0.3% sulfur requirement will primarily affect the production of No.5 and 6 fuel oils. The residual fuel oil, which is derived from the residue obtained from the distillation of crude petroleum, is commonly designated as No. 5 or No. 6 fuel oil (Figure 2). The residuum from atmospheric distillation is further distilled in a vacuum distillation column from which so called vacuum residue is produced. This residue can be diluted with light oil (cutter stock) or visbroken to meet the physical property requirements for No. 6 fuel oil.

The removal of sulfur compounds from petroleum feedstocks has been practiced since the very beginning of the refining industry. The sulfur compounds must be removed to improve color, odor, and other qualities of petroleum products, to improve the life of sulfur-sensitive catalysts, and to reduce formation of gumlike substance, corrosion, and air pollution. The trends of the past and the present capacity of the hydrotreating plants in the United States are shown in Table C-3. These data show that the feedstock that was primarily desulfurized in 1973 is naphtha (57.2%), and distillates (22.7%). The feed to catalytic cracking units and fuel oil represent only a minor portion, 5.3% and 3.5% of the total desulfurization feed. The crude oil capacity in the U.S. in the year 1973 has amounted to 14.0×10^6 b/d, from which 5.2×10^6 bpd or 37% were desulfurized.

Basically, the same technology is applied to desulfurization of gas oil. Presently, commercially available processes usually are categorized as either hydrodesulfurization, which was originally developed for the middle distillate, or hydrocracking. These processes are summarized in Table C-4.

Table C-3 HYDROTREATING PLANT CAPACITIES IN THE UNITED STATES BY FEEDSTOCK TYPE [9, 13], (bpsd)

Feedstock	Year 1966	1967	1968	1969	1973	%
Catalytic Cracking Feed	111,100	180,300	186,300	186,300	275,800	5.3
Naphthas	1,872,710	1,946,400	2,128,600	2,358,600	2,968,280	57.2
Distillates	835,670	941,800	1,009,400	1,029,400	1,178,850	22.7
Gas Oil	60,900	52,400	97,900	112,900	184,000	3.5
Lube Oil	100,900	105,700	118,700	118,700	149,940	2.9
Other	114,465	126,200	115,865	115,865	434,618	8.4
Total	3,095,745	3,352,800	3,656,765	3,921,765	5,191,488	100.0

Table C-4 DESULFURIZATION PROCESSES AND THEIR LICENSORS

Processes	Licensors
Gulfining	Gulf Research and Development
Hydrofining	British Petroleum or Esso Research and Engineering
Hydrodesulfurization	Institute Francaise du Petrole
Isomax	Chevron Research or UOP
Trickle Hydrodesulfurization	Shell Development
HGO-Unicracking	Union Oil Co. of California
Unifining	Union Oil Co. of California and UOP

Only a very few plants are in operation for desulfurization of residual oil throughout the world. The air pollution regulations have led to an effort to desulfurize more and more of the heavier gas oils.

To meet the regulations for the sulfur content in the fuel oil the petroleum refiner has three alternative courses of action: 1) use the low sulfur crude oil; 2) blend the high sulfur fuel oil with the low sulfur light petroleum fraction; and 3) desulfurize the high sulfur fuel oil. Today, most of the world's crude oil supply contains a high amount of sulfur (Table C-5).

Table C-5 AVERAGE SULFUR CONTENT OF WORLD CRUDE OILS[13]

	Sulfur Wt%
Kuwait	2.53
Middle East (includes Egypt)	2.03
Middle East (excluding Kuwait)	1.77
West Texas (below 36 API)	1.77
Venezuela	1.70
Mississippi (low gravity)	1.60
West Texas (all)	1.38
California	1.00
United States average	0.75
Canada (28-45 API)	0.44
East Texas field	0.26
Typical Gulf coastal (U.S.)	0.19
North Africa	0.18
Far East	0.09

The low sulfur crudes are in very short supply. The specifications for the viscosity and flash point for the fuel oil pretty much limit the amount of low sulfur petroleum fractions that can be blended with the high sulfur fuel to reduce sulfur content. These facts limit the options of the petroleum refiners and force them more and more to desulfurize.

Reduction of the sulfur content of the fuel can be accomplished in two ways: direct, or indirect desulfurization. Both methods are presently considered very effective and technically oriented.

The direct desulfurization of residual fuel oil is presently under development and will require additional research, specifically in the area of catalyst life and regeneration. The overall catalyst life is now about 25 to 45 barrels per pound depending upon the amount of metal in the residual fuel oil. The degree of desulfurization is limited to about 75%. Above this limit, hydrocracking becomes controlling and hydrogen consumption increases sharply. Present difficulties are very similar to those of desulfurizing the crude oil itself. The problem is the presence of asphaltic compounds and metallic contaminants that quickly deactivate the catalyst. Although these compounds are diluted in crude oil, the absolute amounts are the same, and therefore the catalyst life in crude oil processing is the same as that of residual fuel oil when the same amount of residual fuel oil is produced. The operating conditions for crude oils are also the same. The only difference is in the liquid hourly space velocity, which will result in larger plant requirements if desulfurization of the crude oil is performed.

The indirect hydrodesulfurization of residual fuel oil is considered most attractive at the present time. In this process as deep a cut as possible is made in the vacuum gas oil. This stream is later desulfurized. The desulfurized product is blended back with vacuum residuals to reduce the sulfur content of the residual fuel oil. This technology is very well developed, but the degree of desulfurization is limited to about 40 to 45% even if 97% of the sulfur is removed from the vacuum gas oil. This is obviously substantially lower than in the direct desulfurization process. The desulfurization of vacuum gas oil is also used as pretreatment of catalytic cracker feedstock to improve this unit operation. The technology of desulfurization of this stream is well established and seems to be free of serious problems.

Relatively high sulfur removal can be obtained and the catalyst life is fairly long: 200 to 400 barrels per pound for gas oil, and 150 to 350 barrels per pound for vacuum gas oil. Hydrogen consumption is lower -- about 484 scf/bbl [13]

Variables affecting the rate of desulfurization include type of feedstock, temperature, total pressure, hydrogen-to-oil ratio, liquid hourly space velocity, and type of catalyst.

At present insufficient data are available to relate the reaction rate constant to the properties of feedstock such as gravity, sulfur content, or boiling range. However, it is generally observed that nonthiophenic sulfur compounds are removed more rapidly than the thiophenic compounds, and that the rate of desulfurization decreases with increasing molecular weight of the petroleum fraction being processed. Table C-6 presents some quantitative data on the difficulty of feedstock desulfurization as a function of its origin. It is interesting to note that the degree of desulfurization of a gas oil is a function of the original sulfur content of the gas oil only and is not influenced by the source of the crude oil from which the gas oil is derived.[24] From this it can be concluded that in order to desulfurize various stocks or crude oils to the same concentration of sulfur, conditions of varying severity would have to be applied.

The upper temperature limit for desulfurization is about 800°F. The temperatures above this point would result in substantial hydrocracking and higher consumption of hydrogen. Higher hydrogen pressure favors the desulfurization but higher oil partial pressure retards the reaction. Generally, if the sulfur content of the feed increases, and the feedstocks become heavier, the higher total pressures are necessary to obtain efficient sulfur removal.

Table C-6 REDUCED CRUDE SULFUR CONTENTS/EASE OF DESULFURIZATION[20]

Reduced Crude	Sulfur, wt%
Amposta (Spanish)	6.7
Arabian Heavy	4.4
Khafji	4.2
Kuwait	4.0
Kirkuk	3.7
Arabian Light	3.0
Iranian Heavy	2.5
Iranian Light	2.4
Qatar	2.3
Tia Juana (Venezuela)	2.2
Zakum	2.0
Murban	1.5
Es Sider	0.8
Brega	0.4
Forcados (Nigerian)	0.4
Hassi Messaoud	0.35
Sarir	0.25

Relative Ease of Desulfurization to 1.0%*	
Tia Juana	Difficult
Iranian Heavy	↑
Khafji	
Arabian Heavy	
Kirkuk	
Iranian Light	
Amposta	
Kuwait	
Arabian Light	
Qatar	
Zakum	↓
Murban	Easy

* Relative ease of direct desulfurization considering sulfur content, molecular structure, metals content, etc.

Another important variable is hydrogen-to-oil ratio. At constant pressure, temperature, and liquid space velocity, the hydrogen-oil ratio affects the fraction of hydrocarbons vaporized, the hydrogen partial pressure, and the catalyst contact time. As the hydrogen-to-oil ratio is increased, the fraction of hydrocarbons vaporized increases together with hydrogen partial pressure, and the catalyst contact time decreases.

As the feedstocks become heavier, the lower space velocities are required, but at low space velocities the higher degree of desulfurization may be accompanied by increased cracking of the feedstocks and increased coke deposition on the catalyst because of the longer contact time. This fact suggests that an optimum hydrogen-to-oil ratio and liquid hourly space velocity exist for a specific desulfurization case.

Typical operating conditions for desulfurization of different types of feedstock are summarized in Table C-7.

For catalytic cracking feedstock the desulfurization of the stream would result in 1) an increase in gasoline yield, 2) elongation of catalyst life, and 3) improvement of product quality. It has been reported that with the hydrogenated feed and the conventional catalyst, the gasoline yield can increase by about 6%. When the feedstock had been hydrogenated and a zeolite catalyst employed, the gasoline yield was reported to increase by about 10% in comparison with the non-hydrogenated feedstock and the conventional catalyst.[13]

The benefits of desulfurization of feed to the FCC unit are mainly due to saturation of polycyclic aromatics, which will form carbonaceous deposits on the catalyst, and to the removal of metallic contaminants, which result in shortened catalytic cracking catalyst life. In addition to benefits of desulfurization on FCC unit operation and production already mentioned, the quality of the gasoline and gas oil from a hydrogenated feedstock is usually superior to that from an untreated feed. Catalytic gasoline from the hydrogenated feed is higher in octane number and lower in sulfur content. For the light gas oils, sulfur is decreased appreciably, diesel index is higher, and color stability is improved.

Table C-7 TYPICAL DESULFURIZATION CONDITIONS FOR VARIOUS FEEDSTOCKS[13]

	Temperature °F	Total Pressure psig	H_2/Oil Ratio scf/bbl	LHSV hr^{-1}
Straight run naphtha	690	350	800	8
Straight run kerosene	690	600	800	4
Straight run atmospheric gas oil	690	875	995	1.52
Straight run vacuum gas oil	750	1000	4,000	1
Residual fuel oil by fixed bed reactor	765	2000	6,342	0.62
Residual fuel oil by ebullated bed reactor	765	2000	6,342	1.54
Crude oil	765	2000	6,342	1.03

It can be concluded that the desulfurization of the FCC feed is not used extensively. The primary reason a refinery desulfurizes is to reduce the sulfur content of heavier fuel oils to meet air pollution regulations. This can be done to some degree either by a direct desulfurization of reduced crude or by indirect desulfurization of deep heavy gas oil fractions which can be blended with vacuum residuum. Neither of these techniques interferes significantly with fluid catalytic cracking and it cannot be expected that strict air pollution regulations imposed on fuel oil sulfur content will automatically solve or even affect the sulfur emission problems of FCC units.

However, if we theorize and take Middle East crudes (Kuwait, Khafji) in our example (this crude would produce a residual fuel oil containing about 4% sulfur), vacuum gas oil of 3.2% sulfur, and straight run gas oil of 1.2% sulfur,[13] the following can be said. Assuming that 80% desulfurization of residual fuel oil is obtained, this would result in 0.8% sulfur in the stream leaving the desulfurization unit. If the refinery intends to process primarily fuel oil, it is very questionable that this stream will be utilized for gasoline production and fed to a catalytic cracking unit. The straight run gas oil stream as well as the desulfurized stream if fed into the catalytic cracking unit would still result in sulfur emission in the range of 700-1000 ppm in the flue gas leaving the regenerator. In order to reduce this emission to 200 ppm level either more efficient desulfurization of the feed would be required or additional desulfurization of the flue gas would be necessary. Thus, in some cases, applying desulfurization to the FCC feed may not be the final solution to reduction of SO_x emissions from regenerator flue gas.

APPENDIX D

ECONOMIC EVALUATION OF FCC FEEDSTOCK DESULFURIZATION

DETAILED ESTIMATES

Table D-1 HYDRODESULFURIZATION OF FCC FEEDSTOCK (HEAVY GAS OIL) TOTAL CAPITAL INVESTMENT

PLANT CAPACITY = 10,000 BPSD AT 90% CAPACITY

Direct Costs	
Desulfurization Section	$2,425,800
Recovery Section	1,033,200
Total Process and Utilities Cost	3,459,000
General Service Facilities	518,900
Total Fixed Capital Investment	$3,977,900
Indirect Costs	
Interest on Construction Loan	159,100
Start-Up Costs	397,800
Working Capital	417,700
Total Capital Investment*	$4,952,500

* Does Not Include Land

Table D-2 OPERATING COST SUMMARY
HYDRODESULFURIZATION OF HEAVY GAS OIL
CAPACITY: 10,000 BPSD AT 90% CAPACITY
FIXED CAPITAL INVESTMENT $4,952,500
SULFUR CONTENT (WT% IN/ WT% OUT) 3.36/2.43

	Labor	
1	Operating	$96,400
2	Maintenance	69,200
3	Control Laboratory	19,300
4	Total Labor	184,900
	Materials	
5	Raw and Process	
6	Treatment Loss	300,400
7	Hydrogen	328,100
8	Catalyst	63,900
9	Maintenance	69,200
10	Operating	9,600
11	Total Materials	771,200
	Utilities	
12	Cooling Water	42,200
13	Process Water	2,200
14	Electricity	66,000
15	Fuel	166,700
16	Total Utilities	277,100
17	Total Direct Operating Cost (4,11,&16)	$1,233,200
18	Plant Overhead	147,900
19	Taxes and Insurance	99,100
20	Plant Cost (17, 18, & 19)	1,381,100
21	General & Administrative, Sales, Research	297,200
22	Cash Expenditures (20 & 21)	1,678,300
23	Depreciation	495,300
24	Interest on Working Capital	25,100
25	Total Operating Costs*	$2,198,700
26	Cost: (Cents/bbl)	70.91

* Does not include any by-product credit or recovery cost

Table D-3 OPERATING COST SUMMARY
HYDRODESULFURIZATION OF HEAVY GAS OIL
CAPACITY: 10,000 BPSD AT 90% CAPACITY
FIXED CAPITAL INVESTMENT $4,952,500
SULFUR CONTENT (WT% IN/ WT% OUT) 3.36/0.243

	Labor	
1	Operating	$96,400
2	Maintenance	69,200
3	Control Laboratory	19,300
4	Total Labor	184,900
	Materials	
5	Raw and Process	
6	Treatment Loss	300,400
7	Hydrogen	1,099,500
8	Catalyst	63,900
9	Maintenance	69,200
10	Operating	9,600
11	Total Materials	1,542,600
	Utilities	
12	Cooling Water	42,200
13	Process Water	2,200
14	Electricity	66,000
15	Fuel	166,700
16	Total Utilities	277,100
17	Total Direct Operating Cost (4,11,&16)	$2,004,600
18	Plant Overhead	147,900
19	Taxes and Insurance	99,100
20	Plant Cost (17, 18, & 19)	2,152,500
21	General & Administrative, Sales, Research	297,200
22	Cash Expenditures (20 & 21)	2,449,700
23	Depreciation	495,300
24	Interest on Working Capital	25,100
25	Total Operating Costs*	$2,970,100
26	Cost: (Cents/bbl)	94.72

* Does not include any by-product credit or recovery cost

Table D-4 HYDRODESULFURIZATION OF FCC FEEDSTOCK (HEAVY GAS OIL)
TOTAL CAPITAL INVESTMENT

PLANT CAPACITY = 50,000 BPSD AT 90% CAPACITY

Direct Costs	
Desulfurization Section	$7,131,200
Recovery Section	3,037,200
Total Process and Utilities Cost	10,168,400
General Service Facilities	1,525,300
Total Fixed Capital Investment	$11,693,700
Indirect Costs	
Interest on Construction Loan	467,800
Start-Up Costs	1,169,400
Working Capital	1,227,800
Total Capital Investment*	$14,558,700

* Does Not Include Land

Table D-5 OPERATING COST SUMMARY
HYDRODESULFURIZATION OF HEAVY GAS OIL
CAPACITY: 50,000 BPSD AT 90% CAPACITY
FIXED CAPITAL INVESTMENT $14,558,700
SULFUR CONTENT (WT% IN/ WT% OUT) 3.36/2.43

	Labor	
1	Operating	$96,400
2	Maintenance	203,400
3	Control Laboratory	19,300
4	Total Labor	319,100
	Materials	
5	Raw and Process	
6	Treatment Loss	901,200
7	Hydrogen	984,100
8	Catalyst	191,700
9	Maintenance	203,400
10	Operating	9,600
11	Total Materials	2,290,000
	Utilities	
12	Cooling Water	126,700
13	Process Water	6,700
14	Electricity	330,000
15	Fuel	833,300
16	Total Utilities	1,296,700
17	Total Direct Operating Cost (4,11,&16)	$3,905,800
18	Plant Overhead	225,300
19	Taxes and Insurance	233,900
20	Plant Cost (17, 18, & 19)	4,365,000
21	General & Administrative, Sales, Research	701,600
22	Cash Expenditures (20 & 21)	5,066,600
23	Depreciation	1,169,400
24	Interest on Working Capital	73,700
25	Total Operating Costs*	$6,309,700
26	Cost: (Cents/bbl)	38.94

* Does not include any by-product credit or recovery cost

Table D-6 OPERATING COST SUMMARY
HYDRODESULFURIZATION OF HEAVY GAS OIL
CAPACITY: 50,000 BPSD AT 90% CAPACITY
FIXED CAPITAL INVESTMENT $14,558,700
SULFUR CONTENT (WT% IN/ WT% OUT) 3.36/0.243

	Labor	
1	Operating	$96,400
2	Maintenance	203,400
3	Control Laboratory	19,300
4	Total Labor	319,100
	Materials	
5	Raw and Process	
6	Treatment Loss	901,200
7	Hydrogen	3,298,400
8	Catalyst	191,700
9	Maintenance	203,400
10	Operating	9,600
11	Total Materials	4,604,300
	Utilities	
12	Cooling Water	126,700
13	Process Water	6,700
14	Electricity	330,000
15	Fuel	833,300
16	Total Utilities	1,296,700
17	Total Direct Operating Cost (4,11,&16)	$6,220,100
18	Plant Overhead	225,300
19	Taxes and Insurance	233,900
20	Plant Cost (17, 18, & 19)	6,679,300
21	General & Administrative, Sales, Research	701,600
22	Cash Expenditures (20 & 21)	7,380,900
23	Depreciation	1,169,400
24	Interest on Working Capital	73,700
25	Total Operating Costs*	$8,624,000
26	Cost: (Cents/bbl)	53.22

* Does not include any by-product credit or recovery cost

Table D-7 HYDRODESULFURIZATION OF FCC FEEDSTOCK (HEAVY GAS OIL)
TOTAL CAPITAL INVESTMENT

PLANT CAPACITY = 150,000 BPSD AT 90% CAPACITY

Direct Costs	
Desulfurization Section	$14,887,900
Recovery Section	6,340,800
Total Process and Utilities Cost	21,228,700
General Service Facilities	3,184,300
Total Fixed Capital Investment	$24,413,000
Indirect Costs	
Interest on Construction Loan	976,500
Start-Up Costs	2,441,300
Working Capital	2,563,400
Total Capital Investment*	$30,394,200

* Does Not Include Land

Table D-8 OPERATING COST SUMMARY
HYDRODESULFURIZATION OF HEAVY GAS OIL
CAPACITY: 150,000 BPSD AT 90% CAPACITY
FIXED CAPITAL INVESTMENT $30,394,200
SULFUR CONTENT (WT% IN/ WT% OUT) 3.36/2.43

	Labor	
1	Operating	$96,400
2	Maintenance	424,600
3	Control Laboratory	19,300
4	Total Labor	540,300
	Materials	
5	Raw and Process	
6	Treatment Loss	2,703,600
7	Hydrogen	2,952,400
8	Catalyst	575,100
9	Maintenance	424,600
10	Operating	9,600
11	Total Materials	6,665,300
	Utilities	
12	Cooling Water	380,100
13	Process Water	20,100
14	Electricity	990,000
15	Fuel	2,499,900
16	Total Utilities	3,890,100
17	Total Direct Operating Cost (4,11,&16)	$11,095,700
18	Plant Overhead	432,300
19	Taxes and Insurance	488,300
20	Plant Cost (17, 18, & 19)	12,016,300
21	General & Administrative, Sales, Research	1,464,800
22	Cash Expenditures (20 & 21)	13,481,100
23	Depreciation	2,441,300
24	Interest on Working Capital	153,800
25	Total Operating Costs*	$16,076,200
26	Cost: (Cents/bbl)	33.10

* Does not include any by-product credit or recovery cost

Table D-9 OPERATING COST SUMMARY
HYDRODESULFURIZATION OF HEAVY GAS OIL
CAPACITY: 150,000 BPSD AT 90% CAPACITY
FIXED CAPITAL INVESTMENT $30,394,200
SULFUR CONTENT (WT% IN/ WT% OUT) 3.36/0.243

	Labor	
1	Operating	$96,400
2	Maintenance	424,600
3	Control Laboratory	19,300
4	Total Labor	540,300
	Materials	
5	Raw and Process	
6	Treatment Loss	2,703,600
7	Hydrogen	9,895,200
8	Catalyst	575,100
9	Maintenance	424,600
10	Operating	9,600
11	Total Materials	13,608,100
	Utilities	
12	Cooling Water	380,100
13	Process Water	20,100
14	Electricity	990,000
15	Fuel	2,499,900
16	Total Utilities	3,890,100
17	Total Direct Operating Cost (4,11,&16)	$17,498,200
18	Plant Overhead	432,300
19	Taxes and Insurance	488,300
20	Plant Cost (17, 18, & 19)	18,418,800
21	General & Administrative, Sales, Research	1,464,800
22	Cash Expenditures (20 & 21)	19,883,600
23	Depreciation	2,441,300
24	Interest on Working Capital	153,800
25	Total Operating Costs*	$22,478,700
26	Cost: (Cents/bbl)	47.39

* Does not include any by-product credit or recovery cost

APPENDIX E

ECONOMIC EVALUATIONS OF CATALYST STEAM CONTACTING (STRIPPING) DETAILED ESTIMATES

E-1. THE CAPITAL INVESTMENT COST

The capital and operating cost estimates of the secondary steam stripping technique have been prepared for two cases, typical and worst, as discussed and defined in Section 5.3.3.

The capital investment cost estimate for the typical case and a 45,000 bpsd nominal size FCC unit has been obtained by cost estimating the major equipment necessary for the process. This cost is designated as purchased equipment cost. Fixed capital investment cost has been calculated by applying a fixed capital investment factor[69] of 4.8 to the purchased equipment cost. The summary of purchased equipment cost determinations and the total capital investment cost data for this case are summarized in Table E-5.

The capital investment cost for the worst case and the same size FCC unit (45,000 bpsd) has been calculated by assuming a scaling factor of 0.67 and applying it to the fixed capital investment for the typical case. The cost for the worst case is summarized in Table E-7. Capital investment cost estimates for both the typical and the worst case, and for 10,000 and 150,000 bpsd FCC unit nominal sizes were obtained by applying the scaling factor of 0.67 to the corresponding fixed capital investment cost figures determined for the 45,000 bpsd unit. The capital investment data are summarized in Tables E-1, E-3, E-9, and E-11.

E1.1 Purchased Equipment Cost for 45,000 bpsd FCC Unit, Typical Case

a. Catalyst Stripper

(1) Assumptions

- Catalyst-to-oil ratio (C/O) is 6 lb of catalyst per lb of total feed for the typical case, and 12 lb of catalyst per lb of total feed for the worst case
- Steam stripping required to achieve 200 ppm sulfur emissions in regenerator off-gas is 4 lb of steam per 100 lb of catalyst
- Steam line pressure, 125 psig
- Sulfur content of coke before steam stripping, 1.5 wt%
- Sulfur content of coke after steam stripping, 0.243 wt%
- Stripper operating temperature, 1000°F
- Stripper operating pressure, 40 psia
- Velocity in stripper feed transfer lines, 40 ft/sec
- Velocity in stripper, 2 ft/sec
- Depth of fluidized bed in the stripper was assumed to be 10 ft with the fluid bed occupying 50% of the total stripper volume
- Vapor velocity in lines leaving the stripper, 100 ft/sec
- Velocity in stripper standpipe, 7 ft/sec
- Stripper bed density, 15 lb/cu ft
- Catalyst density in the standpipe, 35 lb of catalyst per cu ft
- Hydrogen sulfide produced in the steam stripper will be fed into existing Claus unit and no additional cost was assumed to be needed for expansion of this facility

(2) Calculations

Catalyst Circulation Rate (CCR), lb/hour

CCR (lb/hr) =

$$\frac{\text{(catalyst to oil ratio)x(300 lb per barrel of oil)x(barrel per day of feed oil)}}{\text{(24 hours per day)}}$$

CCR (lb/hr) = 75 x (45000) = 3.375×10^6

Steam Stripping Rate (SSR), lb/hour

SSR (lb/hr) = (lb of steam per lb of catalyst) x CCR

SSR (lb/hr) = 0.04 x 3.375×10^6 = 135,000

Volumetric Flow of Steam (VF), acfs

$$\text{VF (ACFS)} = \frac{\text{SSR} \times 359 \text{ cuft/lb mole} \times \left(\frac{1000+460}{460}\right) \times \frac{14.7}{40}}{18 \text{ lb/lb mole} \times 3600}$$

VF (ACFS) = 6.46×10^{-3} x 135000 = 872

Cross-sectional Area (A_L) and Diameter (D_L) of Feed Transfer Lines

$$A_L \text{ (sq ft)} = \frac{\text{VF}}{40 \text{ ft/sec}} = 0.025 \times 872 = 21.8$$

$$D_L \text{ (ft)} = \sqrt{\frac{4A_L}{\pi}} = 1.128 \times \sqrt{A_L} = 5.27$$

Cross-sectional Area (A_S) and Diameter (D_S) of the Stripper

$$A_S \text{ (sq ft)} = \frac{\text{VF}}{2 \text{ ft/sec}} = 0.5 \times 872 = 436$$

$$D_S \text{ (ft)} = 1.128 \times \sqrt{A_S} = 23.6$$

Cross-sectional Area (A_E) and Diameter (D_E) of Lines Leaving the Stripper

$$A_E \text{ (sq ft)} = \frac{VF}{100 \text{ ft/sec}} = 0.01 \times 872 = 8.72$$

$$D_E \text{ (ft)} = 1.128 \times \sqrt{A_E} = 3.33$$

Cross-sectional Area (A_P) and Diameter (D_P) of Stripper Standpipe

$$A_P \text{ (sq ft)} = \frac{CCR}{3600 \times (\text{bed density}) \times (\text{velocity})}$$

$$A_P \text{ (sq ft)} = \frac{3.375 \times 10^6}{3600 \times 35 \times 7} = 3.83$$

$$D_P \text{ (ft)} = 1.128 \times \sqrt{A_P} = 2.21$$

Catalyst Inventory (CI) in the Stripper

$$CI \text{ (tons)} = \frac{A_S \times 10 \text{ ft} \times (\text{stripper bed density})}{2000}$$

$$CI \text{ (tons)} = 0.075 \times 436 = 32.7$$

The cost of the steam stripper was estimated based on weight of this equipment. The unit price for 5% Cr, 1/2% Mo steel, which was assumed to suit this application, was estimated at 53.6¢/lb.[67] The weight of the steam stripper has been determined as 68,600 lb from which the cost was calculated:

$\$ = 0.536 \times 68{,}600 = \$36{,}770$

b. Condenser

The area of the condenser (sq ft) was calculated according to the following assumptions.

- Stripping steam will be cooled from 1000°F to 100°F and condensed
- The cooling water at 80°F will enter the condenser and will be evaporated to produce saturated steam at 353°F
- The overall heat transfer coefficient was assumed to be 700 Btu/ft^2 hr°F
- The cost of heat exchanger was assumed at \$7.75/sq ft[67] (5% Cr, 1/2% Mo steel)

Calculation of Heat Transfer Area

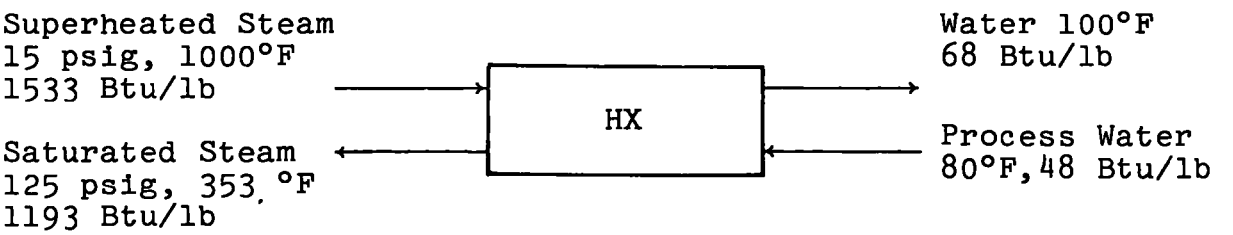

Using the heat transfer equation

$$Q = UA\ \Delta T_m$$

Where

$$\Delta T_m = \frac{(1000-353) - (100-80)}{\ln \frac{1000-353}{100-80}} = 180°F$$

$$Q = 135000 \times (1533-68) = 197.8 \times 10^6 \text{ Btu/hr}$$

$$A = \frac{Q}{U\Delta T_m} = \frac{197.8 \times 10^6}{700 \times 180} = 1570 \text{ sq ft}$$

Cost $ = 7.75 x 1570 = 12,165

$$\text{Water requirement} = \frac{197.8 \times 10^6}{1193-68} = 176 \times 10^3 \text{ lb/hr}$$

$$= 351 \text{ gpm}$$

The unit will produce 41,000 lb/hr of 125 psig steam.

The pump delivering this amount of water through the condenser and superheater operating at 125 psig will have 50 HP.

c. Steam Superheater

It was assumed that the saturated steam from the condenser will be used as the feed for the superheater. The cost of the 90 x 10^6 Btu/hr superheater was estimated at $200,000.[68] Natural gas was considered as the fuel.

Heat input required for the superheater was calculated as follows:

$$Q = 135{,}000 \text{ lb/hr} \times (1533 - 1193) = 45.9 \times 10^6 \text{ Btu/hr}$$

Superheater scale down:

$$\$ = 200{,}000 \left(\frac{45.9}{90}\right)^{0.67} = \$127{,}380$$

The amount of natural gas was approximated based on 15% heat loss and 1000 Btu/cu ft natural gas heating value:

$$\text{Natural Gas} = \frac{1.15 \times 45.9 \times 10^6 \times 24}{1000} = 1.27 \text{ million cu ft/day}$$

d. Phase Separator

A 500-gallon stirred tank was assumed to be used for phase separation. The tank is made of 5% Cr, 1/2% Mo steel. The price of this tank was estimated at $5,000.[67]

e. Acidifier

Epoxy-resin-lined, carbon-steel, stirred, 500-gallon tank was assumed to suit this application. The cost of this tank was assumed to be $3350.[67] 7.35 lb/hr of acid sludge is required to acidify the contents of the acidifier to pH 3. This amount was calculated based on the assumption that the sludge will contain 90% sulfuric acid.

f. Neutralizer

A 500-gallon, carbon steel, stirred tank was assumed to suit this purpose. The cost of this tank was estimated to be $1930.[67] The amount of lime needed to neutralize the acid sludge was calculated to be 5 lb/hr.

g. Clarifier

The mass flow rate through the clarifier was assumed to be 84 gal/sq ft hour.[67] The area of the clarifier (sq ft) was determined as follows:

$$\frac{135{,}000 \text{ lb/hr}}{8.3 \text{ lb/gallon} \times 84 \text{ gallons/sq ft hr}} = 194 \text{ sq ft}$$

From this the diameter of the tank was calculated to be 15.7 ft ∿ 16 ft. The depth of the clarifier was assumed to be 10 ft. The cost of this vessel was assumed to be $5,000.[67]

h. Vacuum Filter

It was assumed that catalyst fines can be filtered by a vacuum filter operating at the load of 15 lb cake/sq ft hour with 70% moisture in the cake.

Assuming 0.1 lb of catalyst per barrel of oil feed will be carried out from the steam stripper, the weight of filter cake and area of filter can be determined as follows:

$$\frac{0.1 \times 45000}{24 \times 0.3} = 625 \text{ lb/hour}$$

and

$$\frac{625}{15} = 42 \text{ sq ft}$$

The cost of this equipment was assumed to be $13,900.[67]

E-2 OPERATING COST

The operating cost estimates were individually calculated for each case and FCC unit size and are summarized in Tables E-2, E-4, E-6, E-8, E-10, and E-12.

In addition to the operating cost assumptions summarized in Section 3.5.2, the following data were applied in operating cost preparation:

- Catalyst loss was assumed 0.1 lb of catalyst per barrel of oil feed for the typical case and 0.2 lb of catalyst per barrel of oil feed for the worst case
- The cost of catalyst was assumed to be $600 /ton
- Operating labor - 2 men per shift

- The cost of raw materials and utilities was assumed to change proportionally with the size of the FCC unit
- The cost of sulfuric acid was assumed at $37/ton (as 100% H_2SO_4)
- The cost of lime was assumed to be $19.50/ton

Table E-1 SUMMARY OF CAPITAL INVESTMENT COSTS
FCC UNIT SIZE: 10,000 BPSD
TYPICAL STRIPPING OPERATION

Fixed Capital Investment	$360,100
Initial Catalyst Cost	4,400
Start-Up Cost	36,000
Working Capital	37,800
Interest on Construction Loan	14,400
Total Investment	$452,700

Table E-2 SUMMARY OF ANNUAL OPERATING COSTS
FCC UNIT SIZE: 10,000 BPSD AT 90% CAPACITY
TYPICAL STRIPPING OPERATION
FIXED CAPITAL INVESTMENT = $360,100

	Labor	
1	Operating	$96,400
2	Maintenance	7,200
3	Control Laboratory	19,300
4	Total Labor	122,900
	Materials	
5	Raw and Process	
6	Acid Sludge	200
7	Lime	100
8	Catalyst Replacement	99,000
9	Maintenance	7,200
10	Operating	9,600
11	Total Materials	116,100
	Utilities	
12	Process Water	11,000
13	Electricity	700
14	Fuel	31,700
15	Total Utilities	43,400
16	Total Direct Operating Cost (4,11,&15)	$282,400
17	Plant Overhead	98,300
18	Taxes and Insurance	7,200
19	Plant Cost (16, 17, & 18)	387,900
20	General & Administrative, Sales, Research	21,600
21	Cash Expenditures (19 & 20)	409,500
22	Depreciation	36,000
23	Interest on Working Capital	2,300
24	Total Operating Costs* (21,22,& 23)	$447,800
25	Cost: (Cents/bbl)	13.84

* Does not include by-product credit or recovery costs

Table E-3 SUMMARY OF CAPITAL INVESTMENT COSTS
FCC UNIT SIZE: 10,000 BPSD
WORST STRIPPING CASE

Fixed Capital Investment	$572,900
Initial Catalyst Cost	8,700
Start-Up Cost	57,300
Working Capital	60,200
Interest on Construction Loan	22,900
Total Investment	$722,000

Table E-4 SUMMARY OF ANNUAL OPERATING COSTS
FCC UNIT SIZE: 10,000 BPSD AT 90% CAPACITY
WORST STRIPPING OPERATION
FIXED CAPITAL INVESTMENT = $572,900

	Labor	
1	Operating	$96,400
2	Maintenance	11,500
3	Control Laboratory	19,300
4	Total Labor	127,200
	Materials	
5	Raw and Process	
6	Acid Sludge	400
7	Lime	200
8	Catalyst Replacement	198,000
9	Maintenance	11,500
10	Operating	9,600
11	Total Materials	219,700
	Utilities	
12	Process Water	22,000
13	Electricity	1,400
14	Fuel	63,400
15	Total Utilities	86,800
16	Total Direct Operating Cost (4,11,&15)	$433,700
17	Plant Overhead	101,800
18	Taxes and Insurance	11,500
19	Plant Cost (16, 17, & 18)	547,000
20	General & Administrative, Sales, Research	34,400
21	Cash Expenditures (19 & 20)	581,400
22	Depreciation	57,300
23	Interest on Working Capital	3,600
24	Total Operating Costs* (21,22,& 23)	$642,300
25	Cost: (Cents/bbl)	19.82

* Does not include by-product credit or recovery costs

Table E-5 SUMMARY OF CAPITAL INVESTMENT COSTS
FCC UNIT SIZE: 45,000 BPSD
TYPICAL STRIPPING OPERATION

PURCHASED EQUIPMENT COST	
Fluid Bed Steam Stripper	$36,770
Condenser	12,170
Steam Superheater	127,380
Phase Separator	5,000
Acidifier	3,350
Neutralizer	1,930
Clarifier	5,000
Vacuum Filter	13,900
Total	$205,500
Fixed Capital Cost (4.8 Factor)	986,400
Initial Catalyst Cost	19,600
Start-Up Cost	98,640
Working Capital	103,570
Interest on Construction Loan	39,460
Total Investment	$1,247,670

Table E-6 SUMMARY OF ANNUAL OPERATING COSTS
FCC UNIT SIZE: 45,000 BPSD AT 90% CAPACITY
TYPICAL STRIPPING OPERATION
FIXED CAPITAL INVESTMENT = $986,400

	Labor	
1	Operating	$96,400
2	Maintenance	19,700
3	Control Laboratory	19,300
4	Total Labor	135,400
	Materials	
5	Raw and Process	
6	Acid Sludge	1,000
7	Lime	400
8	Catalyst Replacement	445,500
9	Maintenance	19,700
10	Operating	9,600
11	Total Materials	476,200
	Utilities	
12	Process Water	49,300
13	Electricity	3,200
14	Fuel	142,500
15	Total Utilities	195,000
16	Total Direct Operating Cost (4,11,&15)	$806,600
17	Plant Overhead	108,300
18	Taxes and Insurance	19,700
19	Plant Cost (16, 17, & 18)	934,600
20	General & Administrative, Sales, Research	59,200
21	Cash Expenditures (19 & 20)	993,800
22	Depreciation	98,600
23	Interest on Working Capital	6,200
24	Total Operating Costs* (21,22,& 23)	$1,098,600
25	Cost: (Cents/bbl)	7.57

* Does not include by-product credit or recovery costs

Table E-7 SUMMARY OF CAPITAL INVESTMENT COSTS
FCC UNIT SIZE: 45,000 BPSD
WORST STRIPPING OPERATION

Fixed Capital Investment	$1,569,400
Initial Catalyst Cost	39,200
Start-Up Cost	156,900
Working Capital	164,800
Interest on Construction Loan	62,800
Total Investment	$1,993,100

Table E-8 SUMMARY OF ANNUAL OPERATING COSTS
FCC UNIT SIZE: 45,000 BPSD AT 90% CAPACITY
WORST STRIPPING OPERATION
FIXED CAPITAL INVESTMENT = $1,569,400

	Labor	
1	Operating	$96,400
2	Maintenance	31,400
3	Control Laboratory	19,300
4	Total Labor	147,100
	Materials	
5	Raw and Process	
6	Acid Sludge	2,000
7	Lime	800
8	Catalyst Replacement	891,000
9	Maintenance	31,400
10	Operating	9,600
11	Total Materials	934,800
	Utilities	
12	Process Water	98,600
13	Electricity	6,400
14	Fuel	285,000
15	Total Utilities	390,000
16	Total Direct Operating Cost (4,11,&15)	$1,471,900
17	Plant Overhead	117,700
18	Taxes and Insurance	31,400
19	Plant Cost (16, 17, & 18)	1,621,000
20	General & Administrative, Sales, Research	94,200
21	Cash Expenditures (19 & 20)	1,715,200
22	Depreciation	156,900
23	Interest on Working Capital	9,900
24	Total Operating Costs* (21,22,& 23)	$1,882,000
25	Cost: (Cents/bbl)	12.93

* Does not include by-product credit or recovery costs

Table E-9 SUMMARY OF CAPITAL INVESTMENT COSTS
FCC UNIT SIZE: 150,000 BPSD
TYPICAL STRIPPING OPERATION

Fixed Capital Investment	$2,209,900
Initial Catalyst Cost	65,300
Start-Up Cost	221,000
Working Capital	232,000
Interest on Construction Loan	88,400
Total Investment	$2,816,600

Table E-10 SUMMARY OF ANNUAL OPERATING COSTS
FCC UNIT SIZE: 150,000 BPSD AT 90% CAPACITY
TYPICAL STRIPPING OPERATION
FIXED CAPITAL INVESTMENT = $2,209,900

	Labor	
1	Operating	$96,400
2	Maintenance	44,200
3	Control Laboratory	19,300
	Total Labor	159,900
	Materials	
5	Raw and Process	
6	Acid Sludge	3,300
7	Lime	1,300
8	Catalyst Replacement	1,485,000
9	Maintenance	44,200
10	Operating	9,600
11	Total Materials	1,543,400
	Utilities	
12	Process Water	164,300
13	Electricity	10,700
14	Fuel	475,000
15	Total Utilities	650,000
16	Total Direct Operating Cost (4,11,&15)	$2,353,300
17	Plant Overhead	127,900
18	Taxes and Insurance	44,200
19	Plant Cost (16, 17, & 18)	2,525,400
20	General & Administrative, Sales, Research	132,600
21	Cash Expenditures (19 & 20)	2,658,000
22	Depreciation	221,000
23	Interest on Working Capital	13,900
24	Total Operating Costs* (21,22,& 23)	$2,892,900
25	Cost: (Cents/bbl)	5.96

* Does not include by-product credit or recovery costs

Table E-11 SUMMARY OF CAPITAL INVESTMENT COSTS
FCC UNIT SIZE: 150,000 BPSD
WORST STRIPPING OPERATION

Fixed Capital Investment	$3,516,100
Initial Catalyst Cost	130,700
Start-Up Cost	351,600
Working Capital	369,200
Interest on Construction Loan	140,600
Total Investment	$4,508,200

Table E-12 SUMMARY OF ANNUAL OPERATING COSTS
FCC UNIT SIZE: 150,000 BPSD AT 90% CAPACITY
WORST STRIPPING OPERATION
FIXED CAPITAL INVESTMENT = $3,516,100

	Labor	
1	Operating	$96,400
2	Maintenance	70,300
3	Control Laboratory	19,300
4	Total Labor	186,000
	Materials	
5	Raw and Process	
6	Acid Sludge	6,700
7	Lime	2,700
8	Catalyst Replacement	2,970,000
9	Maintenance	70,300
10	Operating	9,600
11	Total Materials	3,059,300
	Utilities	
12	Process Water	328,700
13	Electricity	21,300
14	Fuel	950,000
15	Total Utilities	1,300,000
16	Total Direct Operating Cost (4,11,&15)	$4,545,300
17	Plant Overhead	148,800
18	Taxes and Insurance	70,300
19	Plant Cost (16, 17, & 18)	4,764,400
20	General & Administrative, Sales, Research	211,000
21	Cash Expenditures (19 & 20)	4,975,400
22	Depreciation	351,600
23	Interest on Working Capital	22,200
24	Total Operating Costs* (21,22,& 23)	$5,349,200
25	Cost: (Cents/bbl)	10.99

* Does not include by-product credit or recovery costs

APPENDIX F

ECONOMIC EVALUATION OF FLUE GAS DESULFURIZATION SYSTEMS

DETAILED ESTIMATES

Table F-1 SUMMARY OF ANNUAL OPERATING COSTS
WESTVACO PROCESS (SO_2 PRODUCTION)
CAPACITY: 10,000 BPSD
FIXED CAPITAL INVESTMENT = $866,000

	Labor	
1	Operating	$48,200
2	Maintenance	17,300
3	Control Laboratory	9,600
4	Total Labor	75,100
	Materials	
5	Raw and Process	
6	Makeup Carbon	7,900
7	H_2S	2,700
8	Hydrogen	300
9	Maintenance	17,300
10	Operating	7,500
11	Total Materials	35,700
	Utilities	
12	Process Water	8,300
13	Electricity	27,100
14	Fuel	1,300
15	Total Utilities	36,700
16	Total Direct Operating Cost (4,11,&15)	$147,500
17	Plant Overhead	60,100
18	Taxes and Insurance	17,300
19	Plant Cost (16, 17, & 18)	224,900
20	General & Administrative, Sales, Research	51,900
21	Cash Expenditures (19 & 20)	276,800
22	Depreciation	86,600
23	Interest on Working Capital	5,500
24	Charge for Claus Unit	21,600
25	Total Operating Costs (21,22,23,& 24)	$390,500
26	Cost: (Mills/ft^3)	0.0275

Table F-2 SUMMARY OF ANNUAL OPERATING COSTS
WESTVACO PROCESS (SO_2 PRODUCTION)
CAPACITY: 50,000 BPSD
FIXED CAPITAL INVESTMENT = $2,280,000

	Labor	
1	Operating	$48,200
2	Maintenance	45,600
3	Control Laboratory	9,600
4	Total Labor	103,400
	Materials	
5	Raw and Process	
6	Makeup Carbon	39,400
7	H_2S	13,300
8	Hydrogen	7,600
9	Maintenance	45,600
10	Operating	10,200
11	Total Materials	110,100
	Utilities	
12	Process Water	41,400
13	Electricity	135,600
14	Fuel	6,700
15	Total Utilities	183,700
16	Total Direct Operating Cost (4,11,&15)	$397,200
17	Plant Overhead	81,800
18	Taxes and Insurance	45,600
19	Plant Cost (16, 17, & 18)	524,600
20	General & Administrative, Sales, Research	136,800
21	Cash Expenditures (19 & 20)	661,400
22	Depreciation	228,000
23	Interest on Working Capital	14,400
24	Charge for Claus Unit	108,100
25	Total Operating Costs (21,22,23,& 24)	$1,011,900
26	Cost: (Mills/ft^3)	0.0143

Table F-3 SUMMARY OF ANNUAL OPERATING COSTS
WESTVACO PROCESS (SO_2 PRODUCTION)
CAPACITY: 150,000 BPSD
FIXED CAPITAL INVESTMENT = $4,620,000

	Labor	
1	Operating	$48,200
2	Maintenance	92,400
3	Control Laboratory	9,600
4	Total Labor	150,200
	Materials	
5	Raw and Process	
6	Makeup Carbon	118,300
7	H_2S	40,000
8	Hydrogen	4,800
9	Maintenance	92,400
10	Operating	15,000
11	Total Materials	270,500
	Utilities	
12	Process Water	124,200
13	Electricity	406,800
14	Fuel	20,100
15	Total Utilities	551,100
16	Total Direct Operating Cost (4,11,&15)	$971,800
17	Plant Overhead	120,200
18	Taxes and Insurance	92,400
19	Plant Cost (16, 17, & 18)	1,184,400
20	General & Administrative, Sales, Research	277,200
21	Cash Expenditures (19 & 20)	1,461,600
22	Depreciation	462,000
23	Interest on Working Capital	29,100
24	Charge for Claus Unit	324,400
25	Total Operating Costs (21,22,23,& 24)	$2,277,400
26	Cost: (Mills/ft^3)	0.0107

Table F-4 SUMMARY OF ANNUAL OPERATING COSTS
WESTVACO PROCESS (SULFUR PRODUCTION)
CAPACITY: 10,000 BPSD
FIXED CAPITAL INVESTMENT = $924,000

	Labor	
1	Operating	$48,200
2	Maintenance	18,500
3	Control Laboratory	9,600
4	Total Labor	76,300
	Materials	
5	Raw and Process	
6	Makeup Carbon	23,700
7	Hydrogen	32,000
8	Maintenance	18,500
9	Operating	4,800
10	Total Materials	79,000
	Utilities	
11	Process Water	8,300
12	Electricity	27,100
13	Fuel	1,300
14	Total Utilities	36,700
15	Total Direct Operating Cost (4,10,&14)	$192,000
16	Plant Overhead	61,000
17	Taxes and Insurance	18,500
18	Plant Cost (15, 16, & 17)	271,500
19	General & Administrative, Sales, Research	55,500
20	Cash Expenditures (18 & 19)	327,000
21	Depreciation	92,400
22	Interest on Working Capital	5,800
23	Total Operating Costs (20,21, & 22)	$425,200
24	Cost: (Mills/ft^3)	0.0300

Table F-5 SUMMARY OF ANNUAL OPERATING COSTS
WESTVACO PROCESS (SULFUR PRODUCTION)
CAPACITY: 50,000 BPSD
FIXED CAPITAL INVESTMENT =$2,700,000

	Labor	
1	Operating	$48,200
2	Maintenance	54,000
3	Control Laboratory	9,600
4	Total Labor	111,800
	Materials	
5	Raw and Process	
6	Makeup Carbon	118,300
7	Hydrogen	160,000
8	Maintenance	59,000
9	Operating	4,800
10	Total Materials	337,100
	Utilities	
11	Process Water	41,400
12	Electricity	135,600
13	Fuel	6,700
14	Total Utilities	183,700
15	Total Direct Operating Cost (4,10,&14)	$632,600
16	Plant Overhead	89,400
17	Taxes and Insurance	54,000
18	Plant Cost (15, 16, & 17)	776,000
19	General & Administrative, Sales, Research	162,000
20	Cash Expenditures (18 & 19)	938,000
21	Depreciation	270,000
22	Interest on Working Capital	17,000
23	Total Operating Costs (20,21, & 22)	$1,225,000
24	Cost: (Mills/ft^3)	0.0173

Table F-6 SUMMARY OF ANNUAL OPERATING COSTS
WESTVACO PROCESS (SULFUR PRODUCTION)
CAPACITY: 150,000 BPSD
FIXED CAPITAL INVESTMENT =$5,700,000

	Labor	
1	Operating	$48,200
2	Maintenance	114,000
3	Control Laboratory	9,600
4	Total Labor	171,800
	Materials	
5	Raw and Process	
6	Makeup Carbon	354,900
7	Hydrogen	480,000
8	Maintenance	114,000
9	Operating	4,800
10	Total Materials	953,700
	Utilities	
11	Process Water	124,200
12	Electricity	406,800
13	Fuel	20,100
14	Total Utilities	551,100
15	Total Direct Operating Cost (4,10,&14)	$1,676,600
16	Plant Overhead	137,400
17	Taxes and Insurance	114,000
18	Plant Cost (15, 16, & 17)	1,928,000
19	General & Administrative, Sales, Research	342,000
20	Cash Expenditures (18 & 19)	2,270,000
21	Depreciation	570,000
22	Interest on Working Capital	35,900
23	Total Operating Costs (20,21, & 22)	$2,875,900
24	Cost: (Mills/ft^3)	0.0135

Table F-7 SUMMARY OF ANNUAL OPERATING COSTS
SHELL FLUE GAS DESULFURIZATION (SFGD)
CAPACITY: 10,000 BPSD
FIXED CAPITAL INVESTMENT = $1,090,000

	Labor	
1	Operating	$48,200
2	Maintenance	21,800
3	Control Laboratory	9,600
4	Total Labor	79,600
	Materials	
5	Raw and Process	
6	Acceptor Replacement	23,000
7	Hydrogen	34,800
8	Maintenance	21,800
9	Operating	4,800
10	Total Materials	84,400
	Utilities	
11	Steam	900
12	Electricity	12,200
13	Fuel	24,400
14	Total Utilities	37,500
15	Total Direct Operating Cost (4,10,&14)	$201,500
16	Plant Overhead	63,700
17	Taxes and Insurance	21,800
18	Plant Cost (15, 16, & 17)	287,000
19	General & Administrative, Sales, Research	65,400
20	Cash Expenditures (18 & 19)	352,400
21	Depreciation	109,000
22	Interest on Working Capital	6,900
23	Charge for Claus Unit	16,300
24	Total Operating Costs (20, 21,22, & 23)	$484,600
25	Cost: (Mills/ft^3)	0.0341

Table F-8 SUMMARY OF ANNUAL OPERATING COSTS
SHELL FLUE GAS DESULFURIZATION (SFGD)
CAPACITY: 50,000 BPSD
FIXED CAPITAL INVESTMENT = $3,230,000

	Labor	
1	Operating	$48,200
2	Maintenance	64,600
3	Control Laboratory	9,600
4	Total Labor	122,400
	Materials	
5	Raw and Process	
6	Acceptor Replacement	115,200
7	Hydrogen	174,100
8	Maintenance	64,600
9	Operating	4,800
10	Total Materials	358,700
	Utilities	
11	Steam	4,600
12	Electricity	61,100
13	Fuel	122,000
14	Total Utilities	187,700
15	Total Direct Operating Cost (4,10,&14)	$668,800
16	Plant Overhead	97,900
17	Taxes and Insurance	64,600
18	Plant Cost (15, 16, & 17)	831,300
19	General & Administrative, Sales, Research	193,800
20	Cash Expenditures (18 & 19)	1,025,100
21	Depreciation	323,000
22	Interest on Working Capital	20,300
23	Charge for Claus Unit	81,300
24	Total Operating Costs (20, 21,22,&23)	$1,449,700
25	Cost: (Mills/ft^3)	0.0204

Table F-9 SUMMARY OF ANNUAL OPERATING COSTS
SHELL FLUE GAS DESULFURIZATION (SFGD)
CAPACITY: 150,000 BPSD
FIXED CAPITAL INVESTMENT = $6,470,000

	Labor	
1	Operating	$48,200
2	Maintenance	129,400
3	Control Laboratory	9,600
4	Total Labor	187,200
	Materials	
5	Raw and Process	
6	Acceptor Replacement	345,700
7	Hydrogen	522,400
8	Maintenance	129,400
9	Operating	4,800
10	Total Materials	1,002,300
	Utilities	
11	Steam	13,900
12	Electricity	183,300
13	Fuel	366,000
14	Total Utilities	563,200
15	Total Direct Operating Cost (4,10,&14)	$1,752,700
16	Plant Overhead	149,800
17	Taxes and Insurance	129,400
18	Plant Cost (15, 16, & 17)	2,031,900
19	General & Administrative, Sales, Research	388,200
20	Cash Expenditures (18 & 19)	2,420,100
21	Depreciation	647,000
22	Interest on Working Capital	40,800
23	Charge for Claus Unit	244,000
24	Total Operating Costs (20, 21,22,&23)	$3,351,900
25	Cost: (Mills/ft^3)	0.0157

Table F-10 SUMMARY OF ANNUAL OPERATING COSTS
PURASIV-S PROCESS
CAPACITY: 10,000 BPSD
FIXED CAPITAL INVESTMENT = $1,650,000

	Labor	
1	Operating	$48,200
2	Maintenance	33,000
3	Control Laboratory	9,600
4	Total Labor	90,800
	Materials	
5	Raw and Process	
6	Molecular Sieve Replacement	145,100
7	Maintenance	33,000
8	Operating	4,800
9	Total Materials	182,900
	Utilities	
10	Cooling Water	1,300
11	Electricity	52,400
12	Fuel	8,700
13	Total Utilities	62,400
14	Total Direct Operating Cost (4,9,& 13)	$336,100
15	Plant Overhead	72,600
16	Taxes and Insurance	33,000
17	Plant Cost (14, 15, & 16)	441,700
18	General & Administrative, Sales, Research	99,000
19	Cash Expenditures (17 & 18)	540,700
20	Depreciation	165,000
21	Interest on Working Capital	10,400
22	Charge for Claus Unit	16,300
23	Total Operating Costs (19,20,21 & 22)	$732,400
24	Cost: (Mills/ft^3)	0.0516

Table F-11 SUMMARY OF ANNUAL OPERATING COSTS
PURASIV-S PROCESS
CAPACITY: 50,000 BPSD
FIXED CAPITAL INVESTMENT = $4,820,000

	Labor	
1	Operating	$48,200
2	Maintenance	96,400
3	Control Laboratory	9,600
4	Total Labor	154,200
	Materials	
5	Raw and Process	
6	Molecular Sieve Replacement	725,700
7	Maintenance	96,400
8	Operating	4,800
9	Total Materials	826,900
	Utilities	
10	Cooling Water	6,300
11	Electricity	262,000
12	Fuel	43,400
13	Total Utilities	311,700
14	Total Direct Operating Cost (4,9,& 13)	$1,292,800
15	Plant Overhead	123,400
16	Taxes and Insurance	96,400
17	Plant Cost (14, 15, & 16)	1,512,600
18	General & Administrative, Sales, Research	289,200
19	Cash Expenditures (17 & 18)	1,801,800
20	Depreciation	482,000
21	Interest on Working Capital	30,400
22	Charge for Claus Unit	81,300
23	Total Operating Costs (19,20,21 & 22)	$2,395,500
24	Cost: (Mills/ft^3)	0.0338

Table F-12 SUMMARY OF ANNUAL OPERATING COSTS
PURASIV-S PROCESS
CAPACITY: 150,000 BPSD
FIXED CAPITAL INVESTMENT = $9,640,000

	Labor	
1	Operating	$48,200
2	Maintenance	192,800
3	Control Laboratory	9,600
4	Total Labor	250,600
	Materials	
5	Raw and Process	
6	Molecular Sieve Replacement	2,177,000
7	Maintenance	192,800
8	Operating	4,800
9	Total Materials	2,374,600
	Utilities	
10	Cooling Water	19,000
11	Electricity	786,000
12	Fuel	130,300
13	Total Utilities	935,300
14	Total Direct Operating Cost (4,9,& 13)	$3,560,500
15	Plant Overhead	200,500
16	Taxes and Insurance	192,800
17	Plant Cost (14, 15, & 16)	3,953,800
18	General & Administrative, Sales, Research	578,400
19	Cash Expenditures (17 & 18)	4,532,200
20	Depreciation	964,000
21	Interest on Working Capital	60,700
22	Charge for Claus Unit	244,000
23	Total Operating Costs (19,20,21 & 22)	$5,800,900
24	Cost: (Mills/ft^3)	0.0273

Table F-13 SUMMARY OF ANNUAL OPERATING COSTS
WELLMAN-LORD PROCESS
CAPACITY: 10,000 BPSD
FIXED CAPITAL INVESTMENT = $1,500,000

	Labor	
1	Operating	$144,600
2	Maintenance	30,000
3	Control Laboratory	28,900
4	Total Labor	203,500
	Materials	
5	Raw and Process	
6	Sodium Hydroxide	3,000
7	Maintenance	30,000
8	Operating	13,000
9	Total Materials	46,000
	Utilities	
10	Cooling Water	1,100
11	Process Water	700
12	Electricity	13,400
13	Steam	5,000
14	Total Utilities	20,200
15	Total Direct Operating Cost (4,9,&14)	$269,700
16	Plant Overhead	162,800
17	Taxes and Insurance	30,000
18	Plant Cost (15, 16, & 17)	462,500
19	General & Administrative, Sales, Research	90,000
20	Cash Expenditures (18 & 19)	552,500
21	Depreciation	150,000
22	Interest on Working Capital	9,500
23	Charge for Claus Unit	12,600
24	Total Operating Costs (20,21,22, & 23)	$724,600
25	Cost: (Mills/ft^3)	0.0511

Table F-14 SUMMARY OF ANNUAL OPERATING COSTS
WELLMAN-LORD PROCESS
CAPACITY: 50,000 BPSD
FIXED CAPITAL INVESTMENT = $4,420,000

	Labor	
1	Operating	$144,600
2	Maintenance	88,400
3	Control Laboratory	28,900
4	Total Labor	261,900
	Materials	
5	Raw and Process	
6	Sodium Hydroxide	15,200
7	Maintenance	88,400
8	Operating	13,000
9	Total Materials	116,600
	Utilities	
10	Cooling Water	5,300
11	Process Water	3,300
12	Electricity	66,900
13	Steam	24,300
14	Total Utilities	100,300
15	Total Direct Operating Cost (4,9,&14)	$478,800
16	Plant Overhead	209,500
17	Taxes and Insurance	88,400
18	Plant Cost (15, 16, & 17)	776,700
19	General & Administrative, Sales, Research	265,200
20	Cash Expenditures (18 & 19)	1,041,900
21	Depreciation	442,000
22	Interest on Working Capital	27,900
23	Charge for Claus Unit	62,900
24	Total Operating Costs (20,21,22, & 23)	$1,574,700
25	Cost: (Mills/ft^3)	0.0222

Table F-15 SUMMARY OF ANNUAL OPERATING COSTS
WELLMAN-LORD PROCESS
CAPACITY: 150,000 BPSD
FIXED CAPITAL INVESTMENT = $9,080,000

	Labor	
1	Operating	$144,600
2	Maintenance	181,600
3	Control Laboratory	28,900
4	Total Labor	355,100
	Materials	
5	Raw and Process	
6	Sodium Hydroxide	45,600
7	Maintenance	181,600
8	Operating	13,000
9	Total Materials	240,200
	Utilities	
10	Cooling Water	15,800
11	Process Water	9,900
12	Electricity	200,700
13	Steam	74,300
14	Total Utilities	300,700
15	Total Direct Operating Cost (4,9,&14)	$896,000
16	Plant Overhead	283,300
17	Taxes and Insurance	181,600
18	Plant Cost (15, 16, & 17)	1,360,900
19	General & Administrative, Sales, Research	544,800
20	Cash Expenditures (18 & 19)	1,905,700
21	Depreciation	908,000
22	Interest on Working Capital	57,200
23	Charge for Claus Unit	188,700
24	Total Operating Costs (20,21,22, & 23)	$3,059,600
25	Cost: (Mills/ft^3)	0.0144

Table F-16 SUMMARY OF ANNUAL OPERATING COSTS
MAGNESIUM OXIDE SCRUBBING
CAPACITY: 10,000 BPSD
FIXED CAPITAL INVESTMENT = $1,450,000

	Labor	
1	Operating	$154,000
2	Maintenance	29,000
3	Control Laboratory	30,800
4	Total Labor	213,800
	Materials	
5	Raw and Process	
6	Lime	700
7	MgO	3,800
8	Coke	600
9	Maintenance	29,000
10	Operating	15,400
11	Total Materials	49,500
	Utilities	
12	Fuel Oil	23,300
13	Steam	-
14	Process Water	22,800
15	Electricity	20,400
16	Total Utilities	66,500
17	Total Direct Operating Cost (4,11,&16)	$329,800
18	Plant Overhead	171,000
19	Taxes and Insurance	29,000
20	Plant Cost (17, 18, & 19)	529,800
21	General & Administrative, Sales, Research	87,000
22	Cash Expenditures (20 & 21)	616,800
23	Depreciation	145,000
24	Interest on Working Capital	9,100
25	Charge for Claus Unit	16,300
26	Total Operating Costs (22,23,24, & 25)	$787,200
27	Cost: (Mills/ft^3)	0.0555

Table F-17 SUMMARY OF ANNUAL OPERATING COSTS
MAGNESIUM OXIDE SCRUBBING
CAPACITY: 50,000 BPSD
FIXED CAPITAL INVESTMENT = $4,100,000

	Labor	
1	Operating	$154,000
2	Maintenance	82,000
3	Control Laboratory	30,800
4	Total Labor	266,800
	Materials	
5	Raw and Process	
6	Lime	3,700
7	MgO	19,200
8	Coke	3,100
9	Maintenance	82,000
10	Operating	15,400
11	Total Materials	123,400
	Utilities	
12	Fuel Oil	116,500
13	Steam	-
14	Process Water	114,000
15	Electricity	101,900
16	Total Utilities	332,400
17	Total Direct Operating Cost (4,11,&16)	$722,600
18	Plant Overhead	213,400
19	Taxes and Insurance	82,000
20	Plant Cost (17, 18, & 19)	1,018,000
21	General & Administrative, Sales, Research	246,000
22	Cash Expenditures (20 & 21)	1,264,000
23	Depreciation	410,000
24	Interest on Working Capital	25,800
25	Charge for Claus Unit	81,300
26	Total Operating Costs (22,23,24, & 25)	$1,781,100
27	Cost: (Mills/ft^3)	0.0251

Table F-18 SUMMARY OF ANNUAL OPERATING COSTS
MAGNESIUM OXIDE SCRUBBING
CAPACITY: 150,000 BPSD
FIXED CAPITAL INVESTMENT = $8,390,000

	Labor	
1	Operating	$154,000
2	Maintenance	167,800
3	Control Laboratory	30,800
4	Total Labor	352,600
	Materials	
5	Raw and Process	
6	Lime	11,100
7	MgO	57,600
8	Coke	9,300
9	Maintenance	167,800
10	Operating	15,400
11	Total Materials	261,200
	Utilities	
12	Fuel Oil	349,600
13	Steam	-
14	Process Water	341,900
15	Electricity	305,700
16	Total Utilities	997,200
17	Total Direct Operating Cost (4,11,&16)	$1,611,000
18	Plant Overhead	282,100
19	Taxes and Insurance	167,800
20	Plant Cost (17, 18, & 19)	2,060,900
21	General & Administrative, Sales, Research	503,400
22	Cash Expenditures (20 & 21)	2,564,300
23	Depreciation	839,000
24	Interest on Working Capital	52,900
25	Charge for Claus Unit	244,000
26	Total Operating Costs (22,23,24, & 25)	$3,700,200
27	Cost: (Mills/ft^3)	0.0174

Table F-19 SUMMARY OF ANNUAL OPERATING COSTS
CAT-OX PROCESS
CAPACITY: 10,000 BPSD
FIXED CAPITAL INVESTMENT=$1,890,000

	Labor	
1	Operating	$144,500
2	Maintenance	37,800
3	Control Laboratory	28,900
4	Total Labor	211,200
	Materials	
5	Raw and Process	51,600
6	Maintenance	37,800
7	Operating	14,500
8	Total Materials	103,900
	Utilities	
9	Electricity	16,000
10	Total Utilities	16,000
11	Total Direct Operating Cost (4,8,&10)	$331,100
12	Plant Overhead	169,000
13	Taxes and Insurance	37,800
14	Plant Cost (11, 12, & 13)	537,900
15	General & Administrative, Sales, Research	113,400
16	Cash Expenditures (14 & 15)	651,300
17	Depreciation	189,000
18	Interest on Working Capital	11,900
19	Total Operating Cost (16, 17, & 18)	$852,200
20	Cost: (Mills/ft^3)	0.0601

Table F-20 SUMMARY OF ANNUAL OPERATING COSTS
CAT-OX PROCESS
CAPACITY: 50,000 BPSD
FIXED CAPITAL INVESTMENT=$5,490,000

	Labor	
1	Operating	$144,500
2	Maintenance	109,800
3	Control Laboratory	28,900
4	Total Labor	283,200
	Materials	
5	Raw and Process	258,000
6	Maintenance	109,800
7	Operating	14,500
8	Total Materials	382,300
	Utilities	
9	Electricity	80,000
10	Total Utilities	80,000
11	Total Direct Operating Cost (4,8,& 10)	$745,500
12	Plant Overhead	226,600
13	Taxes and Insurance	109,800
14	Plant Cost (11, 12, & 13)	1,081,900
15	General & Administrative, Sales, Research	329,400
16	Cash Expenditures (14 & 15)	1,411,300
17	Depreciation	549,000
18	Interest on Working Capital	34,600
19	Total Operating Cost (16, 17, & 18)	$1,994,900
20	Cost: (Mills/ft^3)	0.0281

Table F-21 SUMMARY OF ANNUAL OPERATING COSTS
CAT-OX PROCESS
CAPACITY: 150,000 BPSD
FIXED CAPITAL INVESTMENT=$11,500,000

	Labor	
1	Operating	$144,500
2	Maintenance	230,000
3	Control Laboratory	28,900
4	Total Labor	403,400
	Materials	
5	Raw and Process	774,000
6	Maintenance	230,000
7	Operating	14,500
8	Total Materials	1,018,500
	Utilities	
9	Electricity	240,000
10	Total Utilities	240,000
11	Total Direct Operating Cost (4,8,&10)	$1,661,900
12	Plant Overhead	322,700
13	Taxes and Insurance	230,000
14	Plant Cost (11, 12, & 13)	2,214,600
15	General & Administrative, Sales, Research	690,000
16	Cash Expenditures (14 & 15)	2,904,600
17	Depreciation	1,150,000
18	Interest on Working Capital	72,500
19	Total Operating Cost (16, 17, & 18)	$4,127,100
20	Cost: (Mills/ft^3)	0.0194

APPENDIX G

EVALUATION FORM FOR ADD-ON FLUE GAS DESULFURIZATION SYSTEMS

CONSIDERATIONS IN RANKING SO_2 EMISSION CONTROL PROCESSES

A. PROCESS NAME

B. DEVELOPER

C. BASIC PRINCIPLE

D. CONTROL LEVEL ACHIEVABLE

1. Claimed (Theoretical) _____

2. Demonstrated _____

E. STATE OF DEVELOPMENT

1. Conceptual Development ☐

2. Laboratory Development ☐

3. Bench Scale Development ☐

4. Pilot Plant Tested ☐

5. Commercial Installation ☐

6. Demonstration Site

a. Location

b. Conditions, Conclusions, and Recommendations

c. Reference

7. Commercial Availability Date _____

F. PROCESS APPLICABILITY TO CATCRACKER FLUE GAS

G. LOCATION OF THE CONTROL PROCESS IN REGENERATOR OFF-GAS FLOW TRAIN

H. RAW MATERIALS NEEDED

I. SALEABLE SULFUR PRODUCTS (WASTES)

1. Sulfur ☐
2. Sulfur Dioxide ☐ Concentration -
3. Sulfuric Acid ☐ Concentration -
4. Other

5. Marketability (According to February, 1973 Market Conditions)

   a. Excellent ☐
   b. Good ☐
   c. Poor ☐

J. OTHER BY-PRODUCTS

1. Form

2. Proposed Methods of Disposal

K. SCHEMATIC OF PROPOSED REGENERATOR OFF-GAS FLOW TRAINS

L. SPACE REQUIREMENTS

M. PROBLEMS FORESEEN IN ACHIEVING RETROFIT

N. ECONOMICS FOR CONTROL PROCESS

A. Catcracker Capacity -

B. Investment Costs - $

C. Operating Costs - ($ /year) ; (¢/bbl) ; ($\frac{\text{Mills}}{\text{ft}^3}$)

D. Reference

O. ADDITIONAL POLLUTANTS CONTROLLED

A. Claimed _____

B. Demonstrated _____

P. PROCESS RELIABILITY

Q. IS THE PROCESS WORTH FURTHER INVESTIGATION FOR CATCRACKER SO_2 EMISSIONS CONTROL APPLICATION?

A. Yes ☐

B. No ☐

C. Unable to Determine at Present

D. Comments

APPENDIX H

SINGLE UNIT CONVERSION FACTORS, BRITISH TO SI (METRIC)

To convert from	to	multiply by
atmosphere (atm)	pascal (Pa)	9.807×10^{4}
barrel (for petroleum, 42 gal)	metre^3 (m^3)	1.590×10^{-1}
British thermal unit (Btu)	joule (J)	1.055×10^{3}
day (d)	second (s)	8.640×10^{4}
degree Celsius (°C)	kelvin (K)	$t_k=t_c+273.15$
degree Fahrenheit (°F)	degree Celsius	$t_c=(t_f-32)/1.8$
degree Fahrenheit (°F)	kelvin (K)	$t_k=(t_f+459.67)/1.8$
foot (ft)	metre (m)	3.048×10^{-1}
foot^3 (cu ft)	metre^3 (m^3)	2.832×10^{-2}
foot^2 (sq ft)	metre^2 (m^2)	9.290×10^{-2}
gallon (gal)	metre^3 (m^3)	3.785×10^{-3}
grain (1/7000 lb)	kilogram (kg)	6.480×10^{-5}
gram (gm)	kilogram (kg)	1.000×10^{-3}
hour (h)	second (s)	3.600×10^{3}
inch (in)	metre (m)	2.540×10^{-2}
inch^2 (sq in)	metre^2 (m^2)	6.452×10^{-4}
inch^3 (cu in)	metre^3 (m^3)	1.639×10^{-5}
kilowatt-hour (kwh)	joule (J)	3.600×10^{6}
litre (l)	metre^3 (m^3)	1.000×10^{-3}
micron (μ)	metre (m)	1.000×10^{-6}
minute (min)	seconds (S)	6.000×10^{1}
pound-force/inch^2 (psi)	pascal (Pa)	6.895×10^{3}
pound-mass (lb)	kilogram (kg)	4.536×10^{-1}
ton (long)	kilogram (kg)	1.016×10^{3}
ton (short)	kilogram (kg)	9.072×10^{2}

TECHNICAL REPORT DATA
(Please read Instructions on the reverse before completing)

1 REPORT NO EPA-650/2-74-082	2	3. RECIPIENT'S ACCESSION NO.
4 TITLE AND SUBTITLE Refinery Catalytic Cracker Regenerator SOx Control Process Survey		5 REPORT DATE September 1974 6. PERFORMING ORGANIZATION CODE MRC-DA-445
7 AUTHOR(S) T. Ctvrtnicek, T. W. Hughes, C. M. Moscowitz, and D. L. Zanders		8. PERFORMING ORGANIZATION REPORT NO.
9 PERFORMING ORGANIZATION NAME AND ADDRESS Monsanto Research Corporation Dayton Laboratory Dayton, Ohio 45407		10. PROGRAM ELEMENT NO. 1AB013; ROAP 21ADC-031 11. CONTRACT/GRANT NO. 68-02-1320 (Task 1, Phase I)
12. SPONSORING AGENCY NAME AND ADDRESS EPA, Office of Research and Development NERC-RTP, Control Systems Laboratory Research Triangle Park, NC 27711		13. TYPE OF REPORT AND PERIOD COVERED Phase I Final, 7-11/73 14. SPONSORING AGENCY CODE

15. SUPPLEMENTARY NOTES

16 ABSTRACT

The report gives results of a survey of conceptual techniques applicable to fluid catalytic cracker (FCC) regenerator off-gas sulfur oxide emission reduction, with respect to their application both to the FCC system itself and to the regenerator off-gas. These two control techniques have also been compared with FCC feedstock desulfurization. The economics for all systems evaluated are compared. A comprehensive analysis of FCC operations has produced evidence that sulfur emission control can most effectively be achieved through steam contacting of the spent cracking catalyst. This concept is therefore proposed as the primary subject for further investigation.

17. KEY WORDS AND DOCUMENT ANALYSIS

a DESCRIPTORS		b. IDENTIFIERS/OPEN ENDED TERMS	c. COSATI Field/Group
Air Pollution	Desulfurization	Air Pollution Control	13B, 07D
Petroleum Refining	Cost Effectiveness	Stationary Sources	13H, 14A
Catalytic Cracking		Feedstock	07A
Regeneration (Engineering)		Steam Contacting	
Sulfur Oxides			07B

18. DISTRIBUTION STATEMENT Unlimited	19. SECURITY CLASS *(This Report)* Unclassified	21. NO. OF PAGES 248
	20. SECURITY CLASS *(This page)* Unclassified	22. PRICE

EPA Form 2220-1 (9-73)