United States
Environmental Protection
Agency

Office of Air
Land and Water Use
Washington DC 20460

EPA 600/5-79-005
March 1979

Research and Development

EPA

Resource Use and Residuals Generation in Households

Resource Use and Residuals Generation in Households

by

J. Kühner, D. F. Luecke, M. Shapiro
Meta Systems Inc
Cambridge, Massachusetts 02138

Contract No. 68-01-2622
Modification No. 3

Charles N. Ehler
U.S. Environmental Protection Agency
Office of Research and Development
Washington, D.C. 20460

Land Use and Comprehensive Planning Staff
Office of Research and Development
U.S. Environmental Protection Agency
Washington, D.C. 20460

FOREWORD

The Environmental Management Research program in the Office of Air, Land, and Water Use, Office of Research and Development, U.S. Environmental Protection Agency, is unique in its emphasis on intermedia effects, on the integration of institutional and technological environmental management strategies, and on a complete range of implementation measures, including economic incentives, land use management, public education and traditional regulatory mechanisms.

This report describes energy and water use and the generation of liquid, solid and gaseous residuals for nine major household functions and their associated activities. It examines those factors which influence resource use and residuals generation, summarizes the range of options available to conserve resources (and reduce residuals discharge), and estimates the costs and benefits of conservation measures. Indices of resource use and residuals generation are developed to aid regional residuals environmental quality management analyses.

Courtney Riordan
Acting Deputy Assistant Administrator
Office of Air, Land, and Water Use

ABSTRACT

This report describes, for households, resource use (energy and water only), the generation of liquid, solid and gaseous residuals (other energy residuals are not discussed, e.g., heat, noise, etc.), potential conservation measures and the direct costs, to the household, associated with these measures. This study focuses on nine major household functions and associated activities and their relative importance for resource use and residuals generation. In considering conservation measures, attention is focused on new structures and factor prices are assumed fixed.

The household activities are organized by function, and the behavioral, physical and institutional factors which influence energy and water use and the residuals generation are identified. With this structure the relevant literature is critically reviewed to provide a basis for estimating use and generation rates and for assessing the influence, where possible, of the factors on these rates. Then, conservation measures and estimates of their performance and cost are presented. Resource use and residuals generation rates and conservation measures are brought together in the context of the factors which influence them, by utilizing two baselines or benchmarks developed for single family residences. These baselines are identified as low and high resource use and residuals generation households. Conservation measures are imposed on the baselines, direct costs to the households are calculated and the relative attractiveness of the measures is determined in terms of the cost/unit reduction in resource use or residual generation.

CONTENTS

Abstract. i
List of Figures v
List of Tables. vi
List of Abbreviations and Symbols x
Conversion Table. xi

Section 1. Introduction. 1
Section 2. Conclusion. 4
Section 3. Recommendations 8
Section 4. Household Functions and Factors Affecting Resource Use and Residuals Generation. 10
Section 5. Household Functions, Resource Use, and Residuals Generation. 22
- Space Heating and Cooling. 22
  - Heating and Cooling Load Tables. 22
  - Computing Fuel Use and Emissions for Heating and Cooling. 23
- Water Heating. 26
  - Energy Requirements, Water Use and Residuals Generation for Water Heating 27
- Lighting 30
- Kitchen. 30
  - Energy Use and Gaseous Residuals Generation. 32
  - Water Use and Wastewater and Liquid Residuals Generation 36
  - Solid Residuals Generation 37
- Washing and Cleaning 37
  - Clothes Washing and Drying 40
  - Floor Cleaning 43
- Bathroom 43
  - Water Use. 43
  - Wastewater Generation. 48
  - Energy 53
- Living and Entertainment 53
- Outdoors 58
  - Water Use. 58
  - Solid Residuals. 59
  - Stormwater Runoff. 60
- Maintenance. 60
  - Automobile Maintenance 60
- Summary. 62

CONTENTS (CONTINUED)

Section 6. Conservation Measures and Their Direct Costs. 64
- Introduction 64
- Space Heating and Cooling. 64
  - Solar Heating and Cooling. 69
  - Costs of Solar Systems 71
- Water Heating. 71
  - Solar Water Heating. 73
- Lighting 75
- Kitchen. 77
  - Water, Liquid Residuals (and Some Energy). 77
  - Energy 77
  - Solid Residuals. 78
- Washing and Cleaning 84
- Bathroom 85
  - Toilets. 85
  - Bathing. 87
  - Lavatory 87
- Outdoors 89
  - Water. 89
  - Solid Residuals. 89
  - Stormwater Runoff. 89
- Maintenance. 91
- Summary. 91

Section 7. Resource and Residuals Baselines and the Impact of Conservation Measures. 92
- Introduction 92
- Baselines. 92
  - Energy and Gaseous Residuals Baselines 93
  - Water Use and Liquid Residuals Baselines 93
  - Solid Residuals Baselines. 101
- Conservation Measures Applied to the Baselines 101
  - Energy 101
  - Gaseous Residuals. 116
  - Water Use and Liquid Residuals 116
  - Solid Residuals. 122

References. 131

Appendices

A. Household Function: Detailed Presentation A-1
- Introduction. A-1
- Space Heating and Cooling A-1
  - Heating and Cooling Load Tables. A-5
  - Computer Fuel Use and Emissions for Heating and Cooling A-8
- Water Heating A-12
  - Inputs and Residuals Generation A-14

CONTENTS (CONTINUED)

Lighting. A-22
Kitchen A-22
Energy Consumption and Residuals Generation. A-26
Washing and Cleaning. A-38
Clothes Washing and Drying Activity. A-41
Floor Cleaning A-46
Bathroom A-48
Conventional Practice. A-51
Living and Entertainment. A-62
Outdoors. A-66
Water Use. A-66
Solid Residuals. A-67
Maintenance A-67
Automobile Maintenance A-68
References. A-69
B. Heating and Cooling Load Calculations. B-1
Design Heating and Cooling Loads. B-1
Design Heat Loss Calculation. B-1
Design Cooling Load Calculation B-3
Annual Heating and Cooling Loads. B-4
Thermal Conductivity of Structural Components B-4
C. Heat Transmission Coefficient (U) Requirements--Heat Loss of Selected Thermal Design Standards. C-1
One and Two-Family Structures. C-1
Multi-Family Structures. C-3
D. Residential Solid Wastes D-1
E. Calculation of Baseline Use and Generation Estimates E-1
Energy and Gaseous Residuals E-1
Water and Liquid Residuals E-6
Solid Residuals. E-7

FIGURES

Number		Page
1	Household Function, Resource Consumption and Residuals Generation	11
A.1	Space Heating: Energy/Residuals	A-3
A.2	Cooling: Energy/Residuals	A-4
A.3	Water Heating: Materials, Energy, and Residuals	A-13
A.4	Lighting--Energy/Residuals	A-23
A.5	Kitchen--Energy/Residuals	A-24
A.6	Kitchen--Materials/Residuals	A-25
A.7	Washing and Cleaning: Energy/Residuals	A-39
A.8	Washing and Cleaning: Materials/Residuals	A-40
A.9	Bathroom--Residuals Flow	A-49
A.10	Bathroom--Energy Flow	A-50

TABLES

Number		Page
1	Household Functions and Related Activities	10
2	Functions to be Considered in Terms of Resource Use and Residuals Generation	12
3	Factors Affecting Energy Use	14
4	Factors Affecting Water Use	17
5	Factors Affecting Generation of Liquid Residuals	19
6	Factors Affecting Solid Residuals Generation	20
7	Insulation in Structures	24
8	Heat Loss--Btu/sq ft/Degree Day	25
9	Cooling Load for Average Outdoor Temperature of 90°F and 85°F	25
10	Water Heating Energy Requirement and Water Use	28
11	Estimated Hot Water Use by Activity	29
12	Residuals Generations Associated with Water Heating	31
13	Appliances in Kitchen and Their Range of Resource Use and Residual Generation	33
14	Appliances in Kitchen for Hypothetical Low, Medium and High Energy Households	35
15	Characteristics of Liquid Residuals from Kitchen	38
16	Ranges of Generation Rates for Each Component of Residential Solid Residuals	39
17	Washing and Cleaning Function: Clothes Washing and Drying	41
18	Electric Energy Use for Floor Cleaning	44
19	Water Use for Bathroom	45
20	Frequency of Toilet Flushing	47
21	Frequency of Bathing	47
22	Comparison of BOD_5 Data for Toilet Flushing Wastewater	49
23	Comparison of Suspended Solids Data for Toilet Flushing Wastewater	50
24	Comparison of Total Nitrogen and Total Phosphorus Data for Toilet Flushing Wastewater	51
25	Bacteriological Characteristics of Bathing Wastewater	52
26	Comparison of BOD_5 Data for Bathing Wastewater	52
27	Comparison of Suspended Solids Data for Bathing Wastewater	54
28	Lavatory Wastewater Characterization	54
29	Potential Contribution of Lavatory Input Materials	55
30	Energy Use for Personal Upkeep	56
31	Energy Consumption of Television	57
32	Typical Pollutant Concentrations in Wastewater from Self-Service Auto Washers Over a 10 Month Period	61
33	Incremental Heat Loss Reduction	66
34	Cooling Load Reductions	67

TABLES (CONTINUED)

Number		Page
35	Costs of Insulation and Storm Windows (in New Housing)	68
36	Reduction Due to Switching Window Exposure and Installing Shading Devices	70
37	Some Examples of Cost Estimates for Solar Heating Systems	72
38	Effect of Improved ASHRAE Heater Design Standards	74
39	Light Source Efficiencies	76
40	Monthly Space, Time, and Cost Requirements for a Household for Recovering Solid Residuals	80
41	Measures Influencing Solid Residuals Generation	81
42	Measures Influencing Solid Residuals Generation	82
43	Measures Influencing Solid Residuals Generation	83
44	Water Conservation Devices for Bathroom (Toilet)	86
45	Water Conservation for Bathroom (Shower, Bath, Sink)	88
46	Lawn and Garden Irrigation Devices Which May Conserve Water	90
47	Some Characteristics of Baseline "Single Family House"	93
48	Characteristics of Baselines for Energy Use	94
49	Characteristics of Baselines for Water Use and Waste Water and Liquid Residuals Generation	95
50	Factors Leading to Low and High Baseline Solid Residuals Generation	96
51	Energy Baselines	97
52	Gaseous Residuals (lbs/yr)	98
53	Water Use Baselines (gal/yr)	99
54	Liquid Residuals Baseline (lbs/yr)	100
55	Solid Residuals Baselines	102
56	Structural Improvements to Reduce Heat Loss	103
57	Energy Savings	105
58	Relative Effectiveness of Conservation Measures	106
59	Cooling Load Reductions	108
60	Summary of Selected Conservation Measures for Heating and Cooling	110
61	Energy Conservation Modifications for Water Heating With Cost Estimates	111
62	Water Heating-Energy Savings and Costs	112
63	Energy Conservation Measures in the Kitchen	114
64	Modified Energy Baselines	115
65	Gaseous Residuals of Modified Low and High Baselines (lbs/yr)	117
66	Water and Liquid Residuals Reductions in the Kitchen	117
67	Water Conservation Measures in Washing and Cleaning	119
68	Water Conservation Measures in the Bathroom	120
69	Effects of Water Saving Devices on Bathroom Water Use	121
70	Reduction of Solid Residuals Generation (Low Baseline)	124
71	Reduction of Low Baseline Solid Residuals (kg/yr)	125
72	Reduction of Solid Residuals Generation (High Baseline)	127
73	Reduction of High Baseline Solid Residuals (kg/yr)	129

TABLES (CONTINUED)

Number		Page
A-1	Household Functions and Related Activities.	A-2
A-2	Insulation in Structures.	A-6
A-3	Heat Loss--BTU/sq ft/Degree Day	A-7
A-4	Cooling Load for Average Outdoor Temperatures (90°F and 85°F)	A-7
A-5	Emission Rates for Gas and Oil (lbs/yr)	A-9
A-6	Air Emissions due to Fuel Use for Residential Heating . . .	A-10
A-7	Water Heating Energy and Water Inputs and Residuals Generated (unit/cap/day).	A-15
A-8	Water Heating Energy and Water Inputs and Residuals Generated (unit/day).	A-17
A-9	Gas Consumption for Water Heating, 1971	A-20
A-10	Estimated Hot Water Use	A-21
A-11	Appliances in Kitchen and their Range of Resource Use and Residuals Generation	A-27
A-12	Characteristics of Liquid Residuals from Kitchen.	A-29
A-13	Ranges of Generation Rates for Each Component of Residential Solid Residuals	A-30
A-14	Appliances in Kitchen for Hypothetical Low, Medium and High Energy Households	A-31
A-15	Typical Values of Energy Consumption of Kitchen Appliances.	A-34
A-16	Inputs and Residual Outputs; Washing and Cleaning Function: Clothes Washing and Drying.	A-42
A-17	Inputs and Residual Outputs per Use; Washing and Cleaning Function: Clothes Washing and Drying	A-44
A-18	Electric Energy Use for Floor Cleaning.	A-47
A-19	Water Use for Bathroom.	A-52
A-20	Frequency of Toilet Flushing.	A-53
A-21	Frequency of Bathing.	A-53
A-22	Comparison of BOD_5 Data for Toilet Flushing Wastewater. . .	A-56
A-23	Comparison of Suspended Solids Data for Toilet Flushing Wastewater.	A-57
A-24	Comparison of Total Nitrogen and Total Phosphorus Data for Toilet Flushing Wastewater.	A-58
A-25	Bacteriological Characteristics of Bathing Wastewater . . .	A-60
A-26	Comparison of BOD_5 for Bathing Wastewater	A-60
A-27	Comparison of Suspended Solids Data for Bathing Wastewater.	A-61
A-28	Lavatory Wastewater Characterization.	A-61
A-29	Potential Contribution of Lavatory Input Materials.	A-63

TABLE (CONTINUED)

Number		Page
A-30	Energy Use for Personal Upkeep.	A-64
A-31	Energy Consumption of Television.	A-65
A-32	Typical Pollutant Concentrations in Wastewater from Self-Service Auto Washers Over a 10 Month Period	A-68
B-1	Dimensions.	B-2
B-2	Climatic Factors for Selected Cities in the U.S	B-5
B-3	Indoor Temperature Correction Factor.	B-7
D-1	Description of Residential Solid Residuals.	D-2
D-2	Components of Solid Residuals Generated Indoors	D-4
D-3	Seasonal Variation of Refuse Composition: Franklin, Ohio .	D-6
D-4	Material-Flow Estimates of Residential Solid Residuals Generation.	D-7
D-5	Ranges of Generation Rates for Each Component of Residential Solid Residuals	D-9
E-1	General Characteristics of Baseline "Single Family Home". .	E-1
E-2	Specific Energy Use Characteristics	E-2
E-3	Standby Heat Loss Characteristics	E-4
E-4	Specific Characteristics for Water Use and Liquid Residuals Baseline.	E-6
E-5	Liquid Residuals.	E-8
E-6	Factors Influencing the Generation of Solid Residuals . . .	E-8
E-7	High Baseline Solid Residuals by Component.	E-9

LIST OF ABBREVIATIONS AND SYMBOLS

ABBREVIATIONS

Btu	--British thermal units
Btuh	--British thermal units per hour
BOD_5	--five day biochemical oxygen demand
Btu/sq ft/degree day	--British thermal units per square foot per degree day
cu ft	--cubic feet
c.v.	--coefficient of variation
°C	--degrees centigrade
°F	--degrees Fahrenheit
gal	--gallon
gpcd	--gallons per capita per day
gpm	--gallons per minute
gm	--grams
hrs	--hours
kg	--kilogram
kwh	--kilowatt hours
lbs	--pounds
N	--nitrogen
%	--percent
P	--phosphorus
sq ft	--square feet
SS	--suspended solids
TN	--total nitrogen
TP	--total phosphorus
yr	--year

CONVERSION TABLE

To Convert	To	Multiply by
inches	millimeters	25.40
inches	centimeters	2.54
feet	meters	0.305
square feet	square meters	0.093
acres	square meters	4047.
cubic feet	cubic meters	0.028
pounds	kilograms	0.453
gallons	cubic meters	0.0038
gallons	liter	3.8
gallons/minute	cubic meters/minute	0.0038

SECTION 1

INTRODUCTION

This report describes resource use (energy and water only), the generation of liquid, solid and gaseous residuals* (other energy residuals are not discussed, e.g. heat, noise, etc.), potential conservation measures for households, and the direct costs associated with these measures for households. Other analyses of household activities have relied primarily on per capita use and generation values derived from aggregate data. This study focuses on nine major household functions and associated activities and their relative importance for resource use and residuals generation. In considering conservation measures we focus attention on new structures and we assume fixed factor prices.

Many concepts presented here were derived from industry studies by Resources for the Future (RFF)† and from the residuals-environmental quality management studies initiated by the U.S. Environmental Protection Agency's (EPA) environmental management program.‡ Although the approach is not without its critics**, it provides a useful framework for organizing household functions and activities and a structure for considering the factors which influence the use of resources and the generation of residuals. The objectives of the study may be stated as follows:

---

* "The term 'residual' is used to replace the more traditional but semantically biased terms 'waste' and 'pollutant.' A residual is a non-product material or energy output, the value of which is less than the cost of collecting, processing, and transporting it for use. The definition is time dependent, i.e., is a function of the level of technology in the society at a point in time and of the relative costs of alternative inputs. For example, manure in the United States is now typically a residual, whereas 30 or so years ago it was a valuable raw material. Residual is defined herein in an economic sense and should be distinguished from the use of the term in a more narrow sense in Section 208(b)(2)(J) of the Federal Water Pollution Control Act Amendments of 1972 (P.L. 92-500), which refers to 'residual waste,' meaning sludge from wastewater treatment plants." (1)

† See for a summary: Reference (2)

‡ For additional information contact: Charles N. Ehler, Media Quality Management Division, Office of Air, Land and Water Use, Office of Research and Development, U.S. E.P.A., Washington, D.C. 20460.

** See, for example, Reference (3).

1. to determine those factors which influence resource use and residuals generation and their reduction in the residential setting by collecting and organizing information in the literature; and to estimate response, quantitatively where possible, to changes in the factors;

2. to summarize and analyze information on the range of options available to households to conserve resources and to reduce residuals discharge;

3. to determine the direct costs to households for reducing resource use and residuals discharge; and

4. to develop indices of resource use and residuals generation for household activities which may aid regional residuals environmental quality management analyses.

There are three major components under which the factors influencing use and generation rates, and their reduction and the costs of reduction, can be organized.

1. the behavioral component;

2. the physical/technological component; and

3. the administrative/institutional component.

From the point of the household, the first component reflects endogenous factors (e.g., thermostat setting or frequency of bathing) which are solely defined by the household. Under the second component factors such as level of insulation and type of plumbing fixtures are, to some extent, under the control of the household. They are partly endogenous and partly exogenous. In the case of the third component the factors are almost totally exogenous to the individual household (e.g. building codes or appliance standards). We recognize that the factors under each component may have a major impact on energy and water use and liquid, gaseous, and solid residuals generation. However, we have chosen to concentrate primarily on the second component. We believe that we can obtain more reliable estimates of the influence which factors under this component have on resource use, residuals generation and conservation measures.

Although we intend to emphasize the second component we do not ignore the other two. After organizing the household activities by function, we identify the behavioral, physical and institutional factors which influence energy and water use and the residuals generation. With this structure we critically review the relevant literature to provide a basis for estimating use and generation rates and for assessing the influence, where possible, of the factors on these rates. Then, conservation measures and estimates of their performance and cost are presented. We bring together resource use and residuals generation rates and conservation measures in the context of the factors which influence them, by utilizing two baselines or benchmarks developed for single family residences. These baselines are identified as low and high resource use and residuals generation households. Conservation measures are

imposed on the baselines, direct costs to the households are calculated and the relative attractiveness of the measures is determined in terms of the cost/unit reduction in resource use or residual generation.

SECTION 2

CONCLUSION

In meeting the objectives of the study, we have found it necessary, in order to use literature estimates of residential resource use and residuals generation, to provide a common basis or framework within which to view the range of values of these estimates. We have devised an approach which puts some perspective on the relationship between literature values of residential energy and water use and gaseous, liquid and solid residuals generation, potential conservation measures and various household functions. Benchmarks or "Baselines" are constructed by specifying for the household functions the characteristics which underlie use and generation rates. Conservation measures are then imposed on these baselines and reductions and their costs to the household are explicitly evaluated.

The following conclusions can be drawn regarding available literature, the baseline method, and the results obtained with its use:

1. In the literature estimates of resource use (energy and water) and of generation of liquid, solid, and gaseous residuals for different types of individual housing units vary widely. Generally, the discussions which accompany these estimates only hint at cause-effect relationships. Thus for purposes of this study we summarize the estimates, while maintaining the distinction between high and low rates and interpret some of them in accordance with our judgment.

2. Organizing the household by functions and associated activities burdened the search for and application of use and residual generation figures, but did provide an operational concept to assist understanding energy/materials/residuals flows, to identify possible points of conservation, and to assess potential conservation measures.

3. An established literature on potential measures to reduce resource use and residuals generation in households which includes cost and performance estimates does not yet exist. We were required to review a wide variety of materials (trade and professional journals, brochures, pamphlets, unpublished reports, etc.). To interpret the estimates found in these sources and to understand the implications of many of the reported values, and the effectiveness and limitations of conservation measures we contacted building suppliers, appliance manufacturers and utilities. In this search it became clear that the physical, institutional, and behavioral factors which characterize individual households and their environments have a significant impact on resource use, residuals generation, and conservation measures. Therefore it became

necessary to interpret use and residuals generation figures within a framework of institutional/administrative, physical/technological, and behavioral factors in order to analyze and assess conservation measures.

4. Constructing baselines provides a reasonable perspective on the relationship between use and generation figures and potential conservation measures and permits estimation of their relative effectiveness (given the various factors of influence). Even though we devised low and high use baselines only for new single family residences, the method should be applicable to most any type of residential structure. However, in order to apply the methodology to existing housing, the spectrum of conservation measures might have to be broadened because retrofitting requires somewhat different technologies and clearly has different costs to households than is the case with new housing.

5. In the baselines used in this study the differences between the high and low use and generation rates are more a matter of the physical character of the structures (e.g., amounts of insulation, efficiency of the heating system, and the presence of resource using devices) than the behavioral differences of the occupants. We feel this limitation is necessary since usable estimates of the response of households to resource price changes or to comprehensive conservation campaigns are not available. Therefore, most of the conservation options chosen rely on physical changes in the structure or on equipment rather than on changes (no matter how marginal) in the life style of the residents. Reducing solid residuals generation, however, is a somewhat different matter because behavioral factors become dominant in all reduction options.

6. The conservation measures (or combinations of measures) are rated on the basis of cost per unit of reduction in resource used or residual generated (e.g., \$/1,000 gallons or $\$/10^6$ Btu). However, since behavioral factors are so important in reducing solid residuals, we have used a level of "inconvenience," which depends to some extent on time, to rate potential measures.

7. Regarding reducing residential energy and water use, we conclude as follows:

(a) Since heating and cooling, and water heating, make up the major portion of residential energy use (approximately 80%) any conservation measures should be first oriented toward reduction in these functions. Most other reductions can be classed as incidental.

Given our high use baseline space heating conservation measures proceeding from very modest addition of insulation to substantial increases in thickness of insulation and inclusion of storm windows can reduce the fuel requirements by almost 60 percent. The effects of burner maintenance and lower thermostat setting depend on what physical improvements have been made; the contributions are small in the case of well insulated homes. High cooling loads can also be reduced by improved insulation; in our case by 40 percent. In the low use case (insulation according to FHA -73 standards) the reduction of the space heating load can still amount to 55 percent for the best

insulation, but the relative effectiveness (as measured by cost/unit of energy saved) decreases: it is $2.48/10^6$ Btu in the high use case, while $5.6/10^6$ Btu in the low use case. But, for example, intermediate insulation, such as an increase to 6 inches in the roof and additions of storm windows has a relative effectiveness of $0.57 and $1.92/10^6$ Btu respectively. Thus, given the current cost of natural gas to the consumer -- an average cost in the northeast of between $3/10^6$ Btu and $4/10^6$ Btu -- only the very highest levels of insulation would appear to be unreasonable for the low use case. The increase in fuel prices will make the more expensive conservation measures attractive. However, for those households which face decreasing block prices for fuel, the increasing marginal costs/unit of energy saved will make the installation of the last few inches of insulation less attractive.

Solar energy systems can provide a substantial portion of the heating and cooling load. Housing with solar systems is generally very well insulated (up to 24 inches of ceiling insulation and 5-5/8 inches of wall insulation). Given a conservative estimate that a solar system could provide (for either baseline) approximately half of the heating requirement at a cost of $10/10^6$ Btu, the remaining fuel requirement would be 27.5×10^6 Btu/yr for the low use baseline, and 53.0×10^6 Btu/yr, for the high use baseline. In the case of cooling (the solar system augmented by some auxiliary equipment at a unit cost of about $3,000), the annual cost would be $21/10^6$ Btu if it provided 50 percent of the energy for cooling. For water heating few reductions in energy can be expected in either baseline unless a flow through unit or a solar unit is substituted for the more conventional storage water heater. Nonetheless, the cost-energy savings ratios show that, given current fuel costs, all are reasonably attractive measures -- particularly in the case of high energy use.

(b) The greatest indoor water savings can be realized within the bathroom function, because toilet and bathing are the most important water using activities. In the low baseline the toilet accounts for 33 percent and bathing 22 percent of indoor use. In the high case, the shares of indoor use are 38 percent and 19 percent respectively. In calculating the possible reductions for the baselines, the most reliable estimates of the decreased water use are those for the toilet, since a decrease in the volume of water necessary to flush is translated directly into savings. The estimates of both shower and sink water saved are less reliable, because reduced flow rate does not necessarily translate into a savings.

Remarkable reductions in water use can be achieved, some even with small investments in hardware (such as dual flush mechanisms and low flow shower heads) which use water more efficiently. Such a modification leads to about 30 percent savings for the high baseline at $0.36/1,000 gallons, and to about 20 percent savings for the low baseline at about $0.22/1,000 gallons. The modification composed of composting toilet (e.g., clivus multrum), air assisted shower head, and recycling of gray water for lawn irrigation saves up to 92 percent of the high baseline bathroom use at $4.1/1,000 gallons, and up to 55 percent of the low baseline bathroom use at $10.8/1,000 gallons.

8. Regarding reducing residential generation of gaseous, liquid, and solid residuals, it can be concluded:

(a) gaseous residuals are only generated by those functions which convert fuel to heat in residences. Since their contribution is very low (with and without their reduction), residential housing does not influence significantly air quality, given the assumption that neither coal nor solid residuals are burnt. Therefore the reduction of gaseous residuals is only considered in the context of reducing energy use.

(b) Since it is assumed in the liquid residuals baselines that none of the water used indoors is consumed, the reduction in wastewater hydraulic load is the water saved. The only measure which will have more than a marginal effect on the residuals is the modification (leading to the largest water savings) in which all the residuals are put on the land. In case a garbage grinder is used, its elimination has a substantial impact because its contribution to the liquid residual is the largest single source.

(c) In a residential setting of single family homes with gardens, composting organics together with garden wastes can provide the largest reduction of the total load. In the presence of garbage grinders, composting garden wastes makes up the largest single reduction. Separating newspapers, glass and metals can reduce the individual components significantly; but the reduction of the total load is only significant in case these components are recovered at a rate of 30 to 50 percent. Separating additional fractions of the paper component should provide further reduction of the load.

CHAPTER 3

RECOMMENDATIONS

1. Extension of Work Toward Behavioral Component: This study has not given great emphasis to the impact of individual behavior on conservation. This is due in part to the relatively low reliability of data needed to infer the response of households to changes in resource prices and pricing policies (e.g., peak load pricing for water). Little exists which could be used in a study like this. If it is desirable, however, to devise implementation incentives which induce conservation, the response of households must be empirically assessed. Schemes should be developed which effectively guide empirical studies. Therefore it is necessary to initiate adequate programs to collect the data from which operational behavioral models can be constructed.

2. Lack of Good Performance and Cost Data of Conservation Equipment: Even though this area has become of so much concern, accessible data are largely of low quality. The nonexistence of data is responsible in part for this situation, but also the lack of consistency and completeness in reporting existing data. In general, performance data are more easily obtained than cost data; but in this study we show that, especially in dealing with equipment applied in areas which contribute marginally, but not insignificantly, to resource use or residuals generation, the lack of data is noticeable. Often data provided by manufacturers are more for the purposes of promotion than evaluation. A well directed and wide ranging effort must be undertaken to collect consistent and reliable performance and cost data.

3. Lack of Data: Clearly certain areas are not covered in the literature because data have not been collected. Therefore, concerted efforts have to be undertaken to collect resource use and residuals generation data at various locations and seasons; otherwise it is impossible to evaluate relative effectiveness of conservation measures. We feel that particularly water use and liquid and solid residuals generation have not been explored to such an extent that reliable estimates can be made given certain behavioral and physical assumptions.

4. Literature Values and Their Inconsistencies: Data used in the study are based solely on the review of literature on residential resource use and residuals generations and on respective conservation measures. Some of the areas have been covered extensively in the literature; others almost not at all. But even in those areas which have been studied frequently the comparison of data is very difficult. Even though the data may be reported in a complete way, cause-effect relationships cannot be identified. This often leaves the reader unable to understand or explain the wide range found in the reported figures. Sometimes the data are just incomplete. A typical example

occurs in the literature on the solid residuals; figures might be given in terms of composition (%; lbs) but without relation to climate, season, and (socio-economic) areas of generation. Frequently composition is reported only as a percentage and total residuals estimates are impossible. Even though many people hold the view that literature reviews and data evaluations have been done beyond justification, additional sorting and evaluation of reported data is needed.

5. Studies of Retrofitting Residences for Conservation: Several studies of retrofitting residences for energy conservation exist. Although studies also have been done on water conservation and the reduction in liquid residuals, they tend to be more descriptive than analytic, or they are outdated. For solid residuals the number of adequate studies is even lower. Comprehensive and timely studies are needed for water conservation and liquid and solid residuals reduction.

SECTION 4

HOUSEHOLD FUNCTIONS AND FACTORS AFFECTING RESOURCE USE AND RESIDUALS GENERATION

The many activities which contribute to the routines of a household are organized under nine functions. These functions and associated activities are listed in Table 1 and their relationships to household material and energy flows are diagrammed in Figure 1. The service functions of space heating and cooling, water heating and lighting are each essentially one activity. In the case of other functions such as kitchen, bathroom, washing and cleaning, and living and entertainment, a variety of activities take place.

TABLE 1. HOUSEHOLD FUNCTIONS AND RELATED ACTIVITIES

- Space Heating and Cooling
- Water Heating
- Lighting
- Kitchen
  - -food preparation
  - -cooking
  - -dish washing
- Washing and Cleaning
  - -clothes washing and drying
  - -house cleaning
- Bathroom
  - -toilet
  - -bathing
  - -sink
  - -personal upkeep
- Living and Entertainment
  - -audio visual
  - -hobby
- Outdoors
  - -garden/yard
  - -recreation
  - -other
- Maintenance
  - -automotive
  - -upkeep, repair

Activities related to the functions kitchen, bathroom, and living and entertainment tend to be room specific; other functions such as washing and cleaning occur throughout the living space. The maintenance function occurs both indoors and outdoors, and consists of repair and upkeep of appliances, the heating, lighting, and water systems, house painting and auto repair. The outdoor function involves landscaping and other yard and garden activities including outdoor entertainment and recreation.

Table 2 summarizes for each function, which resources are used and which residuals generated. Almost all of the functions use energy and the majority use water. Liquid residuals are generated by several functions and three sources of gaseous residuals are identified. Several of the functions generate solid residuals. However, as a matter of convenience in

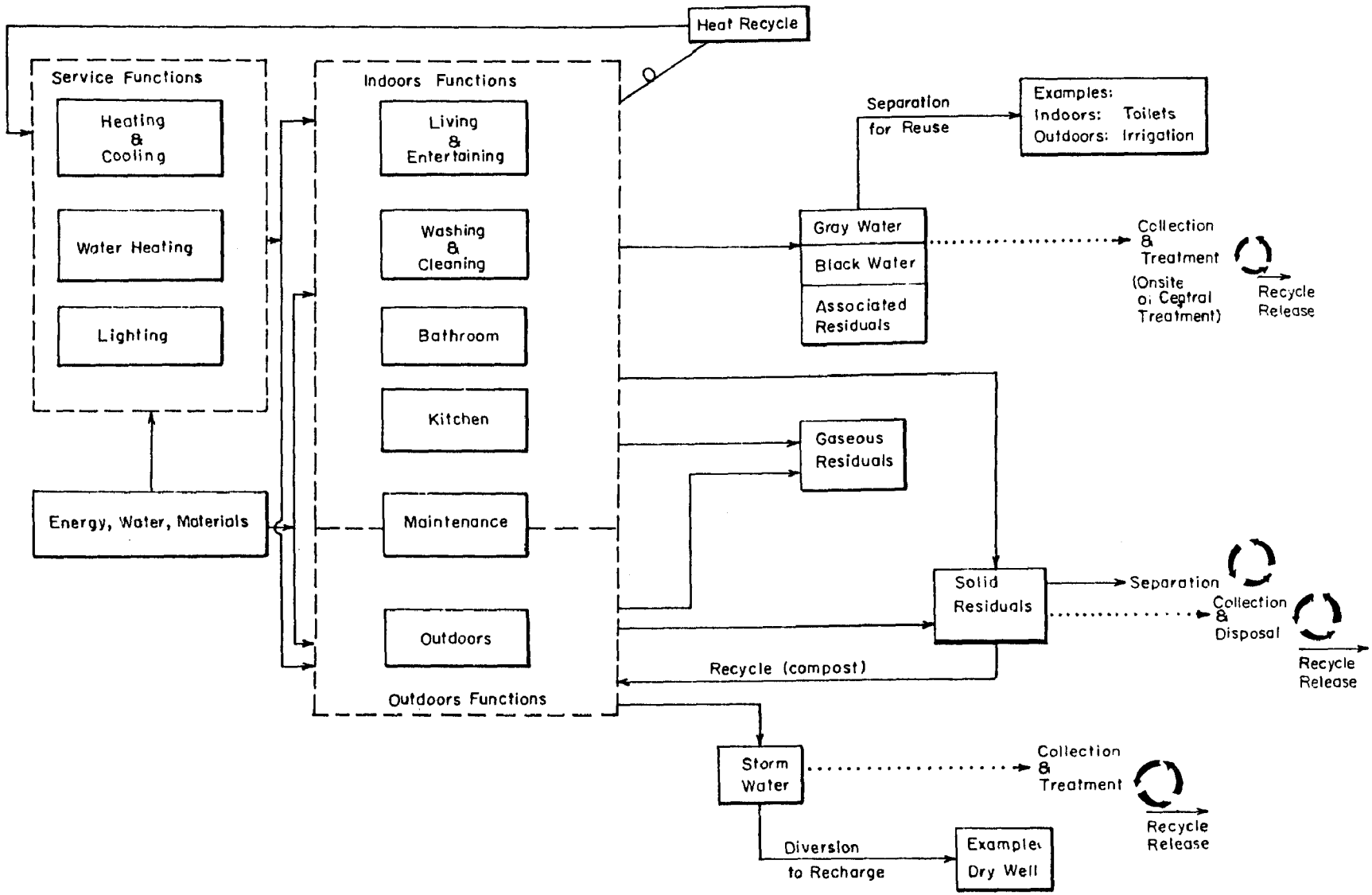

FIGURE 1: HOUSEHOLD FUNCTIONS, RESOURCE CONSUMPTION AND RESIDUALS GENERATION

TABLE 2. FUNCTIONS TO BE CONSIDERED IN TERMS OF RESOURCE USE AND RESIDUALS GENERATION

	Resources		Residuals		
	Energy	Water	Liquid	Solid	Gaseous
Space Heating & Cooling	X				X
Water Heating	X	X			X
Lighting	X				
Kitchen	X	X	X	X	X
Washing & Cleaning	X	X	X		
Bathroom	X	X	X		
Living & Entertainment	X				
Outdoors	(X)	X	X	X	
Maintenance		X	X		

organizing the functions, all indoor solid residuals are assigned to the kitchen function and the solid residuals generated in landscaping, gardening and maintaining the exterior of the residence are assigned to the outdoors function.

Factors which affect the use and generation rates appear in Tables 3 through 6. These tables list by resource (or residual) and by household function the administrative/institutional, physical/technological, and behavorial factors which influence the use and generation rates. At the bottom of each table a row (or set of rows), which is labeled General, contains items on price and pricing policy. We recognize that price changes and pricing policy can act as powerful incentive mechanisms and in an effort to make the tables complete, if not exhaustive, we have made them part of the list. However, recall from Section 1 that we intend to assume fixed factor prices in this study. In subsequent sections we will discuss the other factors and consider how those under the physical/technological component in particular are associated with energy and water use and with liquid, solid and gaseous residuals generation.

TABLE 3. FACTORS AFFECTING ENERGY USE

Function	Administrative & Institutional	Physical & Technological	Behavioral
Space Heating and Cooling	-Building Codes (ASHRAE 90-75) -ordinances or standards which may affect the public acceptance or availability of energy saving devices -research in energy conservation and development of new systems -financial incentives affecting designs or type of insulation, etc. -bank mortgage practices	-insulation -storm windows/door and window weather stripping -shape -orientation -landscaping -mounding -awnings -venetian blinds -curtains -HVAC size -waste heat use -type and fuel of system: electrical resistance; gas/oil; solar -number of control points for temperature setting -thermostat timer -color of walls and roof of residence	-thermostat setting -heating of unoccupied rooms -use of curtains and/or venetian blinds for window insulation -proper use of flue -maintenance of HVAC system
Water Heating	-ASHRAE design standards	-insulate hot water pipes and storage tank -distance between water heater and major uses -central system in multi-family housing -ratio of system capacity to household use	-water heater temperature setting -maintenance of furnace

(Continued on next page)

TABLE 3 (CONTINUED)

Function	Administrative & Institutional	Physical & Technological	Behavioral
Water Heating (continued)		-type of heating unit -type of pilot light -quick recovery option -separate (or booster) water heater -solar water heater	
Lighting (in the whole house)		-type of lighting units	-selection of lighting level -lighting practices
Kitchen	-design standards for ranges, refrigerators, freezers, and other kitchen appliances	-type of range -type of dishwasher (if any) -type of stove and over pilots -type of refrigerator/freezer combination	-frequency of use of range -frequency of use of garbage grinder -frequency of use of dishwasher -use of drying system in dishwasher -temperature setting of refrigerator -use of other appliances
Washing/Cleaning	-design standards for washing machines, dryers, vacuum cleaners, and other appliances	-type of washing machine	-frequency of use of washing machine -frequency of use of dryer -choice of detergent

(continued on next page)

TABLE 3 (CONTINUED)

Function	Administrative & Institutional	Physical & Technological	Behavioral
Washing/Cleaning (continued)		-type of dryer (gas, with/without pilot light; electric) -type of iron -type of vacuum-cleaner -type of floor polisher	-frequency of use of iron -frequency of house cleaning
Bathroom		-individual heating systems -hair dryer -heat lamp	-temperature of bathing water -frequency and length of bathing and/or showering -frequency of use of appliances
Living and Entertainment		-type of television -radio/stereo	-frequency of use of TV and radio/stereo -energy-consuming hobbies (sewing, wood-working, etc.)
Outdoors		-presence of swimming pool with pump and heating system	-use of pool heating system
Maintenance			
General	-price of energy (gas, oil, electricity)		

TABLE 4. FACTORS AFFECTING WATER USE

Function	Administrative & Institutional	Physical & Technological	Behavioral
Space Heating and Cooling	-water heater design standard	-hot water pipe insulation	
Lighting			
Kitchen	-appliance standards -ordinance on garbage grinding	-type of sink -type of nozzle -type of faucet and control valve -dishwasher -garbage grinder	-frequency of dishwasher use -frequency of garbage grinder use
Washing and Cleaning	-appliance standards	-washing machine model	-frequency of washing machine use -laundromat use
Bathroom	-ordinance on water reuse -ordinances and standards on bathroom fixtures and appliances	-bath tub size -type of shower head -type of toilet -gray water recycling system -type of faucet and control valve	-frequency and duration of bathing and showering -frequency of toilet flushing
Living and Entertainment			
Outdoors	-ordinance on water use -ordinance on water recycling -zoning ordinance on lot size -building code	-type of lawn sprinkler system -gray water recycling system -rainfall/runoff storage and control system -type of landscaping -swimming pool	-frequency of lawn sprinkling -practice of washing of impervious areas

(Continued on next page)

TABLE 4 (CONTINUED)

Function	Administrative & Institutional	Physical & Technological	Behavioral
Maintenance	-ordinance on water use	-type of nozzle and hose for car washing	-frequency of car washing -control of leaks
General	-price of water -metering -sewer charges -other ordinances and regulations affecting water use		

TABLE 5. FACTORS AFFECTING GENERATION OF LIQUID RESIDUALS

Function	Administrative & Institutional	Physical & Technological	Behavioral
Space Heating and Cooling			
Water Heating			
Lighting			
Kitchen	-ordinance on garbage grinders -ordinance on constituents of detergents and other cleaning compounds	-garbage grinder	-use of phosphate free detergent -selection of fresh or preprepared food -frequency of use of garbage grinder -amount of food waste and disposal practices
Washing and Cleaning		-type of washing machine	-floor covering preference -type of detergents used -washing and cleaning practice
Bathroom		-Clivis Multrum waterless toilet -Ecolet waterless toilet	-frequency of bathing
Outdoors	-permit (requirement) to use gray water	-gray water recycling system -type of landscape vegetation	
Maintenance	-incentives for recycling waste oil -restrictions on dumping waste oil		-auto maintenance practices -used lubricating oil disposal practice
General	-price of water -pricing policy (e.g. peak load pricing)		

TABLE 6. FACTORS AFFECTING SOLID RESIDUALS GENERATION

Function	Administrative & Institutional	Physical & Technological	Behavioral
Heating and Cooling		-coal fired heating system	
Water Heating			
Lighting		-durability of light bulbs	
Kitchen (and storage)	-ordinance on garbage grinder -food products offering	-garbage grinder -storage space for recyclable materials and containers -compactor	-eating, drinking & related purchasing habits -frequency of garbage grinder use -use of compactor -reuse of packaging material
Washing and Cleaning			
Bathroom			
Living & Entertainment			-purchase of newspapers (and leaving them at home) -collection of magazines and journals -frequency of home entertainment
Outdoors	-ordinance on compost heaps	-on-site compost heap -composition of garden regarding type of trees and lawn	-choosing of materials to be put on compost heap
Maintenance	-standards on durability of goods	-durability of goods	-throw away-repair habits -selecting appliances to be thrown away or repaired

(Continued on next page)

TABLE 6 (CONTINUED)

Function	Administrative & Institutional	Physical & Technological	Behavioral
General	-ownership of dwelling unit -ordinance on use of items made at least partially of recycled materials -support of recycling center by municipal government -separate collection services of materials (type) and their advertisement -ordinance on mandatory source separation -"bottle bill" legislation -user charge system -factor prices of recycled materials -resource prices -scavenger ordinance -recycling centers in neighborhood and/or community-wide	-housing characteristic (type, age, size, room & space distribution) -central storage facility for recyclable materials in MduH* -chutes (MduH) for direct discarding materials -recycling centers in neighborhood and/or community-wide	-inclination to reduce residuals generation through purchasing and use habits -investment of "time" in recycling activities -amount of time of family at home

*MduH = multi-family dwelling unit housing.

SECTION 5

HOUSEHOLD FUNCTIONS, RESOURCE USE, AND RESIDUALS GENERATION

Each of the household functions identified in Section 4 is discussed here in terms of water and/or energy use and residuals generation. Service functions that comprise only one activity are discussed first, followed by those functions comprised of a variety of activities.* The discussions consist of reviews of those studies concerned with the particular functions that report data on resource use and residuals generation. The two exceptions are heating/cooling and lighting. Because of the high energy requirements of heating/cooling and the great variability of energy needs in different parts of the nation in a variety of residential structures, a method is presented for calculating energy use as a function of type of structure, construction materials, structural soundness, and climate. Lighting is discussed only briefly because it uses such a small portion of the total energy in a residence.

SPACE HEATING AND COOLING

Space heating and cooling is the household function which requires the greatest amount of energy. In a typical single-family home in the northeast with 5500 heating degree days and 400 cooling hours per year, over 65 percent of the energy used (approximately 77 million Btu) will be devoted to this function (4). In this section we present the ASHRAE method for calculating heating and cooling loads, the resultant energy requirements (5), and the residuals generated as a function of type of structure and climate.

Heating and Cooling Load Tables

Tables were constructed for a variety of typical residential structures to show heat loss per sq ft per degree day, and cooling load per sq ft per cooling hour.

Tables were developed for four types of residential dwellings.†

1. Single Family, one-story, unattached
2. Single Family, two-story, unattached
3. Attached Split-level Townhouses
4. Three-story, Low Rise apartments.

---

* Appendix A contains mass and energy flow charts and a more detailed presentation for each function.

† See Appendix B for method of heat loss calculation.

For each of the construction types three different wall materials (i.e., wood, brick veneer, and aluminum siding) were considered initially.* However, because the heat loss coefficients for the three wall materials vary only a few percent one set of coefficients which are an average of wood and brick veneer is used. Five levels of thermal soundness are also considered.

1. Uninsulated, no insulation on walls, floor or roof. Single windows.
2. FHA '65,† enough insulation to comply with the 1965 FHA minimum property standards for federally insured homes.
3. FHA '73, enough insulation to comply with the 1973 FHA minimum property standards for federally insured homes.
4. ASHRAE 90-75, enough insulation to comply with ASHRAE standards for heat loss.
5. Best, 24" insulation in the ceiling, 5 5/8" of insulation in walls (requires 6" studs), 2" of insulation around foundation, and storm windows.‡

Table 7 contains the complete array of insulation options. For each structure at each level of thermal soundness, heating load and cooling load were calculated (Tables 8 and 9).**

The tables were constructed assuming a winter indoor temperature of 65°F and summer indoor temperature of 75°F. The values for the 20 cases in each table have units of Btu/sq ft of floor area heated (or cooled) per degree day (or cooling hour). For reasons explained in Appendix B the cooling load tables have two parts, one for an average outdoor temperature of 90°F and the other for a temperature of 85°F. In an example below, use of both the heating and cooling tables in conjunction with average degree days and cooling hours for the northeast is demonstrated.

Computing Fuel Use and Emissions for Heating and Cooling

A one-story, single family house with 1,500 sq ft of living space constructed according to FHA '65 standards loses about 25,650 Btu/degree day (1,500 sq ft x 17.1 Btu/sq ft/degree day), when the indoor temperature is kept at 65°F. Multiplying the heat loss by 5000 degree days gives an annual heat loss of 128.25×10^6 Btu. If the residence is equipped with a gas forced air heating system (conversion efficiency of 75 percent) the total fuel requirement will be

$$128.25 \times 10^6 \text{ Btu/yr} \div (1{,}040 \text{ Btu/cu ft} \times 0.75) = 164.42 \times 10^3 \text{ cu ft of gas.}$$

---

* These wall types represent construction characteristics reported in Characteristics of New Construction. These types encompass most of the existing stock of houses as well as new construction.

† See Appendix C for summary of regulations.

‡ Note: We designed our houses with a combined roof/ceiling, as given in Thermal Design of Buildings.

** The details of the calculations are contained in Appendix B.

TABLE 7. INSULATION IN STRUCTURES

	None	FHA '65	FHA '73	ASHRAE 90-75	Best
Single Family 1-story					
Wall	-	-	1-1/2"	3 5/8"	5-5/8"
Roof	-	1"	3"	4"	24
Window	Single	Single	Single	Single	Storm
Floor	-	1 1/2"	2"	2"	2"
Single Family 2-story					
Wall	-	-	1-1/2"	3 5/8"	5 -5/8"
Roof	-	1"	3"	4"	24
Window	Single	Single	Single	Single	Storm
Floor	-	1 1/2"	2"	2"	2"
Townhouse 9 Row					
Wall	-	1"	3"	1 1/2"	5-5/8"
Roof	-	2"	5"	5"	24
Window	Single	Single	Single	Single	Storm
Floor	-	-	1 1/2"	2"	2"
3-Story Low Rise					
Wall	-	-	2"	3 5/8"	5-5/8"
Roof	-	1"	3"	4"	24
Window	Single	Single	Single	Single	Storm
Floor	-	-	1 1/2"	2"	2"

TABLE 8. HEAT LOSS -- BTU/SQ FT/DEGREE DAY

	Uninsulated	FHA '65	FHA '73	ASHRAE 90-75	Best
Single Family 1-story	21.0	17.1	11.0	9.6	7.0
Single Family 2-story	19.2	17.3	11.2	9.7	7.0
Townhouse Split Level	16.8	12.0	8.2	9.2	6.7
Low Rise 3-story	10.8	10.8	6.7	6.2	4.1

TABLE 9. COOLING LOAD FOR AVERAGE OUTDOOR TEMPERATURE 90°F*

	Uninsulated	FHA '65	FHA '73	ASHRAE 90-75	Best
Single Family 1-story	40	35	27	24	19.4
Single Family 2-story	36	33	27	24	19.9
Townhouse Split Level	24	19	15	16	12.1
Low Rise 3-story	19	18	14	14	10.5

COOLING LOAD FOR AVERAGE OUTDOOR TEMPERATURE 85°F*

	Uninsulated	FHA '65	FHA '73	ASHRAE 90-75	Best
Single Family 1-story	35	31	25	22	17.6
Single Family 2-story	31	29	24	22	18.1
Townhouse Split Level	21	17	14	14	11.3
Low Rise 3-story	17	16	13	13	10.6

* Units -- Btu/sq ft/cooling hour.

In order to translate the fuel requirement into emissions the U.S. EPA-conversion factors (6) (see Table A-5) are used. Total emissions are:

	lb/yr
Particulates	1.6
SO_2	.1
SO_3	-
CO	3.3
Hydrocarbons	1.3
NO_2	13.1

If the calculations are to be done for a different region of the country an adjustment can be made on the basis of the ratio of degree days. For example, the average number of degree days per year in Denver, Colorado is 6200. Thus for the same single family house in Colorado, heat loss would be 160×10^6 Btu/yr (128.25×10^6 Btu/yr x (6200/5000) with comparable increases in fuel use and residuals generation. Determining the effect of changing the thermostat setting is done on the same principle using conversion ratios found in Table B-3 for various combinations of thermostat setting and average outdoor temperature. Thus if the thermostat were turned up to 70°F and the average outdoor temperature were 42°F the heat loss would be 153×10^6 Btu/yr.

Energy requirements for cooling are computed in a similar fashion using the cooling load table in conjunction with average annual cooling hour values and average outdoor temperatures. However, with electric cooling it is not necessary to calculate air emissions since they occur at the power plant. With average outdoor temperatures of 85°F during the summer and an average of 400 cooling hours in the northeast, the single family house with central air conditioning will have a total cooling load of 21×10^6 Btu (35 Btu/sq ft/ cooling hour x 400 cooling hours x 1,500 sq ft). This is a little less than 20 percent of the heating load.

WATER HEATING

Residential water heating utilizes about 15 percent of the total residential energy consumption for the nation, accounting for about 3.9 (10^{12})Btu's in 1970 (7). In a typical single family house in the Northeast the water heater represents about 18 percent of the total energy requirement (4). This makes water heating the second most important residential energy consumption activity. Virtually all dwelling units that have plumbing also have hot water, thus future growth of energy consumption for this function depends primarily on population growth and growth in the per capita use of hot water.

The range of energy requirements for heating water is presented for electric, gas, and oil units along with the resultant air emissions. The results of studies on estimating hot water uses are also discussed and reasons for the wide variations in estimates are offered.

Energy Requirements, Water Use and Residuals Generation for Water Heating

Table 10 presents the energy requirements and the water use for the water heating function. These data indicate that daily per capita direct energy requirements range from less than 8,000 to almost 30,000 Btu's. Minimum and maximum values for electric heaters are lower than for gas heaters. This difference may in part reflect incompatibilities in the data sources.* However, despite the difficulty in comparing data from different sources, there is a real difference in the direct energy consumption between electric and fossil fuel heaters, due primarily to the energy losses involved in the combustion and heat transfer for the fossil fuels. Under current ASHRAE guidelines (13) a gas storage heater designed to supply 80 gallons/day at 140°F and a water temperature rise of 80°F would require about 26,000 Btu/day more than a comparable electric heater (neglecting the substantial conversion losses at the power plant). This is a difference of 43 percent. With a pilot-less ignition (usually electric) the difference would about 17,000 Btu/day. However, if average fuel costs are considered, the electric heater is about 4.1 times as expensive to operate.†

Quick Recovery Electric Water Heaters--

Some electric water heaters feature "quick recovery" heating elements which allow for more rapid heating after the stored water has been depleted. These heaters draw about 4,500 watts as opposed to 2,500 watts for standard heaters, and reportedly increase energy consumption by about 14 percent for typical use (9). However, the rapid recovery heater would require less storage for any given demand, and the economics for the consumer depend upon the trade-off between storage costs and the additional energy costs.

Hot Water Use--

Residential hot water use can be estimated in two ways. First, the reported energy consumption can be converted to an implied water use by making explicit assumptions as to thermal efficiency and water inlet and outlet temperatures. A second approach is to attempt to calculate the hot water use from estimates of the individual water consumption for various activities for given water temperatures. The first approach was employed in deriving the estimates in Table 10. These estimates place per capita hot water use at between 9 and 27 gallons/day, if a 140°F heater outlet temperature is assumed. Estimates of individual activity use of the hot water are presented in Table 11. These are intended to give ranges of normal household use and are

---

* The range reported for electric heaters is based on data provided by Boston Edison (10). The values for gas heaters are based on estimates by Hittman Associates (12) for different dwelling types and household sizes. These data agree closely with the range of regional averages reported by the American Gas Association (8).

† Based on national average prices of $\$1.42/10^6$ Btu for gas and $\$8.29/10^6$ Btu for electricity in 1974, as reported in American Gas Association (8).

TABLE 10. WATER HEATING ENERGY REQUIREMENT AND WATER USE (UNIT/CAPITA/DAY)

	Energy Requirement[1] (Btu)			Implied Water Use[2,5] (gal)
	electric	gas	oil	
gas heater - pilot	NA	17,900-29,600	NA	13.1-26.5
gas heater - electric ignition[3]	X	13,500-27,200	NA	13.1-26.5
electric heater	7,900-19,800	NA	NA	9.5-23.7
oil heater	X	NA	13,500-27,200[4]	13.1-26.5

1. Direct energy consumption. Energy loss in power plant conversion is ignored.

2. Total of hot water use of household activities. Should not be added to water use of other activities in computing total water use.

3. Calculated from estimate with pilot light by assuming heat loads of 9,600 Btu/day for pilot light.

4. Assumed to operate at same efficiency as gas.

5. Assumed hot water temperature = 140°F, average inlet temperature 60°F, efficiencies: electric = 0.80, gas and oil = 0.65.

Notes: Where data is given only in units/appliance, conversion to per capita values based upon 3.5 persons/dwelling unless otherwise specified by source.
NA = not applicable; X = data not available.

Sources: -American Gas Association (8)
-Edison Electric Institute (9)
-Boston Edison (10)
-Hittman Associates (11)
-Hittman Associates (12)

TABLE 11. ESTIMATED HOT WATER USE BY ACTIVITY

Activity	Total Water Use (gal)	Temperature	Hot Water Use (gal)	Frequency/ capita/day	Hot Water Use gal/capita/day
		140° outlet temperature			
bath & shower	10-50	100°F	5-25	.5-1.0	2.5-25
dishwasing:					
machine	10-17	140°F	10-17	.25-.5	2.5-8.5
hand	8-14	110°F	5-9	.30-.5	1.5-4.5
laundry:					
hot cycle	25-60	120°F	19-45	0-.5	0-22.5
warm wash/ cool rinse	25-70	100°F wash 60°F rinse	5-12	0-.5	0-6.0
cleaning	2	120°F	1.5	.1-.2	.1-.3
other (personal upkeep, etc.)	1-10	100°F	.5-5	1	.5-5
		120° outlet temperature			
bath & shower	10-50	100°F	6.7-33	.5-1.0	3.3-33
dishwashing:					
machine	10-17	120°F	10-17	.25-.5	2.5-8.5
hand	8-14	110°F	6.7-11.7	.30-.5	2-5.8
laundry:					
hot cycle	25-60	120°F	25-60	0-.5	0-30
warm wash/ cool rinse	25-70	100°F wash 60°F rinse	6.7-16	0-.5	0-8
cleaning	2	120°F	2	.1-.2	.2-.4
other (personal upkeep, etc.)	1-10	100°F	.7-6.7	1	.7-6.7

Notes: Assumed water inlet temperature 60°F. It has been assumed that frequency of use is independent of volume of use.

based on the available literature. For a 120°F water outlet temperature a low water use household, which hand washes dishes, does all laundry at a laundromat, and uses the minimum values listed, would employ an average of 6.2 gpcd. A high consuming household with a washing machine and automatic dishwasher, and utilizing the maximum values listed would require almost 80 gpcd. The latter figure is undoubtedly unrealistic as an average over an extended period of time (30 gpcd is a more reasonable figure), but it indicates the high energy using potential inherent in a modern home equipped with common appliances.

Air Emissions--

The residuals indicated in Table 12 were obtained by applying EPA emission coefficients (6) to the energy use data (Table A-5), and are thus strictly proportional to fuel use for any particular fuel type. Since water heating is responsible for only one-sixth as much energy use as space heating, and relies mostly on natural gas and electricity, the contribution of air pollutants from water heating is a relatively small proportion of the total residential contribution.

LIGHTING

Energy used for lighting comprises about 15-20 percent of the lighting/appliance energy load and about one to two percent of the total residential energy load. An average value for energy used in home lighting is 876 kwh/yr, though, depending on the household, it could range anywhere from 500-1,750 kwh/yr. It neither uses substantial amounts of energy nor produces significant residuals.

KITCHEN

The kitchen function includes three major activities; food storage and preparation, dishwashing, and storage and disposal of solid residuals. These activities generally involve the use of "appliances." The impact of the following appliances on both resource use and residuals generation* are considered as parts of the kitchen function.

Food Storage and Preparation

-refrigerator/freezer (E)
-separate freezer (E)
-stove/oven (E)
-sink (W, WW, LR)

---

* E = energy consumption at point of user; W = water consumption; WW = amount of wastewater; LR = characteristics of liquid residuals (in wastewater); SR = solid residuals; and GR = gaseous residuals.

TABLE 12. RESIDUALS GENERATIONS ASSOCIATED WITH WATER HEATING

	Air Emissions (lb/capita/day)			
	particulates	SO_2	NO_X	CO
gas heater -pilot	$3.2(10^{-4})$* $-5.4(10^{-4})$	$1.0(10^{-5})$* $-1.7(10^{-5})$	$1.7(10^{-3})$* $-2.8(10^{-3})$	$3.4(10^{-4})$* $-5.6(10^{-4})$
gas heater -electric ignition	$2.4(10^{-4})$* $-4.8(10^{-4})$	$.77(10^{-5})$* $-1.50(10^{-5})$	$1.3(10^{-3})$* $-2.6(10^{-3})$	$2.6(10^{-4})$* $-5.2(10^{-4})$
electric heater	NA	NA	NA	NA
oil heater	$9.6(10^{-4})$† $-19.2(10^{-4})$	$.03(10^{-5})$†‡ $-.07(10^{-5})$	$1.15(10^{-3})$† $-1.30(10^{-3})$	$4.8(10^{-4})$† $-9.6(10^{-4})$

* 1 cu ft natural gas = 1,050 Btu.

† 1 gal fuel oil = 140,000 Btu.

‡ Assumed sulphur content 2.5 percent by weight.

Dishwashing

-sink for manual dishwashing (W, WW, LR)
-automatic dishwasher (W, WW, LR)

Storage and Disposal of Residuals

-garbage grinder (E, W, WW, LR)
-compactors (E, SR)
-chutes (gravity or vacuum) (E, SR)
-storage bins for mixed and/or separated solid residuals (LR).

Energy Use and Gaseous Residuals Generation

The ranges of resource use and residuals generation in the kitchen, identified in the literature or derived from various sources, are summarized in Tables 13 and 14. The 1970 saturation levels for each appliance and those projected for 1990 are shown in the table and indicate the importance of each appliance in the household.

Energy Use--

The consumption and operating requirements of refrigerators, freezers, ranges, and dishwashers are shown in Table 13, columns 1 and 2.* The probable distribution of other electrical appliances in households with different energy use levels are indicated in Table 14. All the yearly values of use (kwh/yr) are based on the literature.

Freezers, particularly the frost-free version, are the most energy-intensive appliances in the kitchen. The saturation figures (Table 13) suggest that there are not many in use because they are expensive to buy and to operate. In addition, the increasing size of refrigerator/freezer combinations limit the need for an additional freezer. Another factor is the lack of space in apartment buildings to accommodate a freezer. Manual defrost freezers, frost-free refrigerator/freezer combinations, and stove and oven units constitute a group of similarly intensive energy appliances. Manual defrost refrigerator/freezer units and dishwashers usually utilize less than half as much energy as a stove or frost-free refrigerator.

Although frost-free refrigerators may consume as much as 30-60 percent more energy than manual units, 70 percent of the working units are expected to be frost-free designs in 1990. Currently 40 percent of the units are of this type (14). The lower kwh/yr figure for manual units, however, may be somewhat unrealistic; energy consumption rises as soon as ice begins to accumulate within the unit, so that irregular defrosting could lead to an energy

---

* Garbage grinders are not discussed in the section on energy consumption because their use of electricity is negligible.

TABLE 13. APPLIANCES IN KITCHEN AND THEIR RANGE OF RESOURCE USE AND RESIDUAL GENERATION

		Energy* kwh/yr	Energy* 10^3 Btu/cap/day	Water† and Wastewater (gpcd)	LR	SR	% Saturation‡ 1970	% Saturation‡ 1990
Refrigerator/ Freezer	Frost Free	750-1,790	2.0-4.8	-	-	-	98**	120
	Manual	460- 728	1.2-1.9					
Separate Freezer	Frost Free	1,761-1,985	4.7-5.3	-	-	-	28 (21)	46
	Manual	1,195-1,320	3.19-3.5					
Range (stove/oven)		1,142-1,550 (2,300-3,100)††	3.05-4.14	-	-	-	41 (28)	75
Sink		-	-	2.7-18.0‡‡ (9.9)	Table 15	-	>100	>100
Dishwashing	Automatic	322-380	.86-1.02	1.1-6.0		-	19 (34)	80
	Manual	-	-	1.1-4.6				
Garbage Grinder		9.9-30	.03-.05	.8-4.0		Table 16		
Storage Bins		-	-	-	-			
Refuse Compactor***		60						

* Assumption of 3.5 people per household for per capita energy consumption figure; energy figures neglect conversion loss at power plant; energy use for hot water heating is accounted for in Water Heating.

† Evaporative losses are neglected; per capita figures are based on the family sizes encountered in sampling programs of the authors (see "Bathroom and Bedroom").

(continued)

TABLE 13. (CONTINUED)

† Figures are based on Project Independence (local and regional differences are documented in the literature); the figures in parentheses indicate the figures for Southern California.

** 40 percent of the units in operation today, and 70 percent of the ones in operation in 1990 are of the frost free feature.

†† The figures in parentheses give the consumption figures of gas ranges.

‡‡ 18.0 and 9.9 gpcd include bathroom sinks.

*** Only one source of reference.

TABLE 14. APPLIANCES IN KITCHEN FOR HYPOTHETICAL LOW, MEDIUM AND HIGH ENERGY HOUSEHOLDS.* (BTU IN MILLIONS/YEAR)

Low	Btu	Medium	Btu	High	Btu
Range	4.0	Range	4.3	Range (self cleaning)	4.8
Refrigerator (manual)	2.5	Refrigerator/ Freezer	4.0	Refrigerator/ Freezer	4.4
Coffeemaker	.5	Coffeemaker	.5	Freezer	5.0
Toaster	.1	Frying Pan	.3	Dishwasher	1.2
		Toaster	.1	Coffeemaker	.5
				Frying Pan	.3
				Toaster-Oven	.3
				Broiler	.3
				Trash Compacter	.2
				Toaster	.1

* The Btu-values are typical values for these appliances as provided by manufacturers.

consumption as high as that of a frost-free unit. Side-by-side refrigerator/freezer combinations are inefficient; they use approximately 18 percent more electricity than comparable top-freezer models (15).

Gas refrigeration units are no longer sold in this country; however, some units are still in operation. In 1968, there were four million gas units, compared to 57.6 million electric units. A gas refrigerator uses an equivalent of 4,102 kwh/yr compared to 1,270 kwh/yr for electric units (neglecting the conversion losses at the power plant) (16).

The average size of refrigerators increased by about one-thrid of a cu ft/yr during the 1960's. Recently, the rate of increase has dropped to one-sixth of a cu ft/yr because of the limits imposed by current building standards. In 1970 the average size was 13 cu ft; it is now 14 cu ft (14).

The saturation level of ranges (stove and oven combined for our purposes) has been above 90 percent in the past 20 years; currently it is 97 percent. Both gas and electric ranges are still sold, but sales of electric ranges began to outnumber sales of gas ranges during the mid-1960's, even though gas ranges are cheaper to buy and cheaper to run (in terms of energy use costs). The number of electric units in operation is now larger than the number of gas units. Only on the West Coast is the number of gas ranges sold and in operation greater than the number of electric ranges.

The various sizes of gas and electric ranges, along with cooking habits, account for variations in energy consumption by these appliances. The American Gas Association, for example, makes the distinction between house ranges and apartment ranges. House ranges are estimated to consume on the average 10.5 million Btu/yr (3,080 kwh/yr) compared to 8.8 million Btu/yr (2,340 kwh/yr) for apartment ranges.

Most of the energy consumed by the operation of dishwashers is attributable to hot water demand. Dishwashers use eight to nine percent of the central hot water supply in the home. Up to 16 gallons of hot water of the central hot water system (about 120°F-140°F) are used per cycle. In models with "sani-wash" features the water is further heated up to 150°F-155°F. The heating/drying cycle is the second largest energy consuming factor. Eliminating it would save about 30 percent of the energy used in a dishwasher (14).

Residuals Generation--

There are no significant amounts of gaseous residuals emitted from the residence by the kitchen appliances. There are some implied power plant emissions associated with the use of electric appliances, but they are not considered in this study. The gas stove and gas refrigerator do convert fuel in the residence, but the products of the conversion process are unimportant as residuals.

Water Use and Wastewater and Liquid Residuals Generation

Sinks, dishwashers, and garbage grinders are the water users in the kitchen. Neglecting losses due to evaporation in food preparation, the wastewater

generated is equal to the amount of water used at these points minus any recycling which may occur. All water consumption figures in Table 13 are based on references discussed in more detail in the section on the bathroom (see below). Most of the values appear to be reasonable and are consistent among the references. Dishwashing (manual or automatic) is the greatest water user in the kitchen. Use of a garbage grinder also consumes substantial amounts of water as shown in the table. Food preparation is included in the category "sink," since there are no data on this water use activity alone.

The range of water use estimates for each of the appliances is greater than four-fold. But it should be understood that the ranges are not meant to reflect limits. There are derived from literature values based for the most part on small samples (17). They are not lower and upper bounds.

The greatest source of liquid residuals in the kitchen is the garbage grinder. As shown in Table 15 over half of the BOD_5 and suspended solids result from this appliance. Use of the sink does contribute somewhat less than half of the BOD_5 and a very small portion of the suspended solids. Organics from the dishwasher are at least an order of magnitude less than either the garbage grinder or sink. As sources of nutrients the appliances are comparable and as will be shown below, they supply amounts of total nitrogen and total phosphorus in the same range as washing machines.

Solid Residuals Generation

The kitchen function includes the storage and disposal of solid residuals generated in all indoor household functions. These solid residuals include: (a) lint, inorganics from sweeping the floor, vacuuming, etc; (b) paper, glass, plastics, textile, rubber, leather products and other incidentals; (c) paper, bottles, cans and other miscellaneous incidentals, such as ashes from fireplaces; and (d) ash residuals from individual heating systems fired with coal and wood.

The values shown in Table 16 (derived in Appendix D) are based on an average household of 3.2 persons (average U.S. family size) because the per capita generation data (used as multiplier for the percentage ranges of each component) were derived from a nationwide material flow balance. A low and a high estimate is provided for three cases: (i) combined disposal of all solid wastes; (ii) separation of glass and metals from paper and other wastes; and (iii) use of a garbage grinder. By and large, paper is the most important component of solid waste accounting for over 30 percent by weight in most cases. Paper is followed by food wastes except when a grinder is used. Glass is also important, as is metal. The other constituents are quite negligible.

WASHING AND CLEANING

The washing and cleaning function is composed of two major activities -- clothes washing and drying, and room cleaning. The clothes washing and drying activities account for somewhere around 2 to 3 percent of the direct household energy use (11) and 4 to 27 percent of the household water use (19). Room cleaning is responsible for a much smaller proportion of total water and energy

TABLE 15. CHARACTERISTICS OF LIQUID RESIDUALS FROM KITCHEN (lb/cap/day)

	BOD_5	SS	TN	TP
Sink	.018 - .023[3]	.005[1] - .009	.001 - .002[3]	.001
Dishwasher	.001[1] - .028[2]	.0002[1] - .012[2]	.001[2]	.001 - .002[2]
Garbage Grinder*	.024 - .068 (.021 - .10)	.035 - .096 (.03 - .14)	.001 - .002	.00007[1] - .0002

* It is reported that on the average .5 lb/cap/day of garbage results in .068 lb BOD_5/cap/day and .096 lb (dry) SS/cap/day; assuming linear relations in the absence of data, the range based on the range of garbage disposed (Table 16) would result in approximately .021-.1 lb BOD_5/cap/day and .03-.14 lb SS/cap/day, respectively. (See K. Ligman, et al. (18)).

1. the low values are reported in the same study as the low flow values (Bennett, E. R., et al. (17)).

2. the high values are reported in the same study as the high flow values (Witt, M.D. (19)).

3. high value is reported in the study of low flow value (Bennett, E. R., et al. (17)).

TABLE 16. RANGES OF GENERATION RATES FOR EACH COMPONENT OF RESIDENTIAL SOLID RESIDUALS*
(kg/cap/day)

		Organics	Paper	Glass	Metals	Plastics	Rubber Leather	Textiles	Miscel-laneous	Total †
Combined Storage and Disposal	L	.08	.09	.06	.06	.01	.005	.005	.002	.31
	H	.37	.44	.29	.14	.09	.04	.05	.02	1.44
Separated Stor-age and Disposal	L	.09	.08	.06	.06	.01	.005	.005	.002	.31
	H	.43	.4	.29	.14	.09	.04	.05	.02	1.44
Organics Disposed of by Grinder	L	.02	.08	.06	.06	.01	.005	.005	.002	.24
	H	.11	.4	.29	.14	.09	.04	.05	.02	1.13

* See Appendix D for derivation of figures (L = low; H = high)

† The totals were calculated under the assumption of independence of the components leading to extremely high and low values.

requirements. The principal appliances associated with this activity are vacuum cleaners and electric floor washers and polishers, which together account for about one-tenth of one percent of direct household energy input.* Water use for floor washing and other cleaning activities accounts for 1 to 5 percent of total household requirements (19).

Clothes Washing and Drying

Table 17 lists ranges of average energy and water consumption and residuals generation by appliances used for clothes washing and drying, expressed in units of consumption or residuals generation per capita/day.†

Clothes Washers--

In 1970 approximately 60 percent of the occupied dwelling units in the U.S. had automatic clothes washers, and another 10 percent had non-automatic washers (25). An automatic washing machine is considered to be a standard appliance for most new single family homes, but these appliances are seldom found in individual units of multi-family structures. However, often they are provided in common areas. In dwellings that do not have washing machines most of the water use and residuals generation associated with clothes washing is "exported" to laundromats and commercial laundries. Only for very low income families, and in isolated rural areas, is most clothes washing still done by hand.

As shown in Table 17, the direct electrical energy use of the washing machine is very small, but its use does contribute significantly to the household's water consumption and to the generation of BOD_5 and suspended solids. Washing machine effluent contains about 16 percent of the household's BOD_5 generation, 12 percent of the suspended solids and up to 50 percent of the phosphorus where high phosphate detergents are employed.‡

Clothes Dryers--

Dryers account for about two percent of the household energy use (11). The percentage of homes with dryers ranges from 33 to 53 depending upon the region of the country (26). Among households with dryers, about 67 percent are electric units, the remainder are gas.

A typical dryer employs a 1/4-1/3 hp electric motor to operate the tumbler and blower and uses a 4,000-5,000 watt electric heater or 10,000-25,000 Btu/hr gas burner to generate the heat needed for evaporation. In direct energy use the electric dryer is slightly more efficient than the gas unit. For a 35 minute cycle the electric unit would utilize 9,900 Btu (ignoring conversion losses at the power plant), the gas about 12,700. However,

---

* Meta estimate.

† Estimates on a per cycle or per use basis appear in Appendix A.

‡ Estimates based on averages from studies cited in Table 17.

TABLE 17. INPUTS AND RESIDUAL OUTPUTS

WASHING AND CLEANING FUNCTION: CLOTHES WASHING AND DRYING

(Units/capita/day)

	Energy Use[1] (Btu)		Water Use	Wastewater	BOD_5	Suspended Solids	Total Nitrogen	Total Phosphorous
	Electric	Gas	(gal.)	(gal.)	(lb)	(lb)	(lb)	(lb)
Washing Machine								
-automatic	235-274	NA	4.2-18.1[5]	4.2-18.1[2]	.019-.033	.007-.024	0.0-.002	.0001-.005
-non-automatic	203	NA	x	x	x	x	x	x
Dryer								
-gas (w. pilot)	178-342	4,697-9,393[3]	NA	NA	NA	NA	NA	NA
-gas (w/o pilot)	178[4]-342	3,131-6,027	NA	NA	NA	NA	NA	NA
-electric	2,645-5,975	NA	NA	NA	NA	NA	NA	NA
Iron (electric)	160-400	NA	NA	NA	NA	NA	NA	NA

1. Does not include hot water energy. Electric energy is only Btu's used at home, not energy used to generate electricity.

2. Evaporative losses ignored.

3. Pilot light consumes about 880 Btu/day.

4. Does not include electrical energy for ignition.

(continued)

TABLE 17. (Continued)

5. Water use data for washing machines is based upon a small sample of actual users, while electric use data was taken from annual averages reported in the sources listed below. As a result the ranges for the two categories may not be completely consistent.

Notes: Where original data is based upon total household use a conversion factor of 3.5 people/household is assumed, except where otherwise specified in source.
NA = not applicable
x = data unavailable

Sources: Energy: Edison Electric Institute (9).
Hittman Associates (11).
Federal Energy Administration (14).
Association of Home Appliance Manufacturers (20).
Citizen's Advisory Committee on Environmental Quality (21).
Water: Ligman, K., et al. (18).
Siegrist, R., et al. (22).
Bennett, E.R. and K. Linstedt (23).
Cohen, S. and H. Wallman (24).

under existing pricing structures the electric dryer is from five to six times as expensive to operate as a gas dryer (26).

Floor Cleaning

Floor cleaning includes sweeping, washing, waxing, and vacuuming. Water use reported for this activity ranges from 0.45 to 2.05 gpcd (19). About one gallon is employed to clean a full size room; thus water use for this activity will increase somewhat with total floor area or number of rooms. Water used for cleaning is usually taken from the sinks or tub and is thus included in the values for kitchen and bathroom sinks and tub, and reported elsewhere in the report. For the same reason values for wastewater and waterborne residuals are not reported separately here.

Solid wastes are generated from the dirt and dust collected by sweeping and vacuuming and from detergent packaging. These are included in the solid waste storage and disposal activity for the kitchen function.

About 90 percent of households have vacuum cleaners. A much smaller percentage have floor washers and polishers (27). They are the principal energy using appliances in this category. Average per capita and per event energy requirements are listed in Table 18. Relative to major appliances these uses are insignificant.*

BATHROOM

Bathroom activities include toilet flushing, bathing (tub and shower), lavatory use (wash basin), and personal upkeep. Lavatory use is defined as water use and wastewater generation at the bathroom sink as opposed to personal upkeep which encompasses electrical appliances such as hair dryers, water pics, electric shavers, shaving cream heaters, and solid waste generation. For bathroom activities energy use is primarily associated with heating water. However, only the amount of hot water required for bathing and lavatory use is included in this section. Energy requirements have been treated above.

Water Use

Water use data are shown for various bathroom activities in Table 19. Several of the factors influencing the quantities of water used for bathroom activities are discussed below.

Toilet flushing--

The water use for toilet flushing shown in the table extends from 9.2 gpcd to 26.2 gpcd. Toilet flushing accounts for a major fraction of the total household water use; estimates range from 22 percent (29) to 45 percent (19) of total daily residential water use.

---

* One exception to the low level of energy use in this category is the central vacuum system which is found in some houses. We do not have quantititative data on the energy demand for this system, but the presence or absence of such a system has been found to be significant as a predictor of household electricity consumption (28).

TABLE 18. ELECTRIC ENERGY USE FOR FLOOR CLEANING[1]

	Btu/capita/day[2,3]	Btu/event[2]
Vacuum	90.3-122.9	2,218-2,580
Floor polisher	40.1-48.6	980-1,194

1 Direct use, does not include conversion at the generating plant.

2 Computed assuming one vacuuming or polishing "event" per week.

3 Assuming 3.5 persons/household.

Sources: Edison Electric Institute (9).

Boston Edison (10).

Citizen's Advisory Committee on Environmental Quality (21).

TABLE 19. WATER USE FOR BATHROOM (GPCD)

	REFERENCE								
Function	1	2	3	4	5	6	7	8	9
Bath	6.3	20.0	10.0	17.5	7.8	11.7	10.8	8.8	20.0
Shower	6.3	20.0	10.0	17.5	7.8	11.7	10.8	8.8	20.0
Toilet	17.1	25.0	9.2	26.2	17.6	18.4	14.4	14.5	24.0
Lavatory								2.0	
Total *	23.4	45.0	19.2	43.7	24.4	30.1	25.2	25.3	44.0

References:

1. Cohen, S. and H. Wallman (24).
2. Bailey, J.R., et al. (29).
3. Witt, M.D. (19).
4. Haney, P.D. and C.L. Hamann (30).
5. Laak, R. (31).
6. Ligman, K. (32).
7. Wallman, H. (33).
8. Bennett, E.R., et al. (17).
9. Reid, G.W. (34).

* Total includes either bath or shower, but not both.

Conventional toilets have flushing volumes ranging from 3.0 gallons to 5.5 gallons (19). Older toilets often have larger tank volumes and use higher volumes per flush. The frequency of flushing reported in various studies is shown in Table 20. Data on the frequency of toilet flushing by age group show that the frequency for adults is 4.5 per capita/day, while for both teenagers (13-20 years) and children (1-12 years) the frequency is 2.4 (17). Combining frequencies and flush volumes, minimum and maximum water use values of 6.9 gpcd and 24.8 gpcd, respectively, are obtained; the range agrees with the literature values shown in Table 19.

Seasonal data show little difference between warm and cold weather periods. In Wisconsin, summer use is 2 percent greater than winter use (19) whereas in Connecticut, Rhode Island and California, data show winter use 4 percent greater than summer use (24). These studies include families with children at school during the winter period, but the effect of their absence during the school day is minimal.

Regional data show average toilet flushing volumes of 16.8 gpcd in Connecticut and Rhode Island (35), 8.5 gpcd in Wisconsin (17), 14.7 gpcd in Colorado (24), and 18.2 gpcd in California (36). The low value for Wisconsin is the result of low frequency of flushing, as previously discussed. No regional trend is apparent.

Bathing--

The range of water use for bathing, as shown in Table 21 is from 6.3 gpcd to 20.0 gpcd. Bathing has been reported from 18 percent to 37 percent of the total daily residential water use (35). Bathing involves either tub or shower use and there is considerable variation in water use for each. The variability of water use during a shower is high, due more to the duration per shower than frequency of showering. Data indicate showers can take less (35), the same (17) and more water (18) than tub bathing and exhibit a C.V. of 0.49. Studies have shown a minimum volume of water for a shower is 2.5 gallons (17), and a maximum of greater than 50 gallons (the shower being limited in duration to the hot water tank capacity). Shower flow rates range from 5.0 gpm to 10.0 gpm (22). Bathing water use ranges from 16.3 to 31.5 gallons per shower (35). Tub bathing uses from 20 to 30 gallons per event. The average frequency of bathing reported in various studies ranges from 2.2 to 3.3 times per week (Table 21).

Very little difference exists between the mean frequency of bathing according to the data; however, disaggregation according to age group does show a large difference. The most frequent bathers are the teenage group (from age 13-20) with 5.3 baths per capita/week. Adults bathe at a frequency of 1.9 times/week, and children (age 1-2) at 1.1 times/week (18). Multiplying these minimum and maximum frequencies of bathing by the minimum and maximum volumes per bathing event produces a range of 2.6 to 23.9 gpcd. This range is broader than shown in Table 19.

Seasonal data show little variation for warm and cold weather. May to November data show an average of 6.0 gpcd compared with December to April averages of 7.0 gpcd (24). Seasonal differences do exist for hot water use as discussed under energy requirements and water heating above. Regional bathing data exhibit no definable trend in water use. In Connecticut and Rhode

TABLE 20. FREQUENCY OF TOILET FLUSHING

		Ligman* (Rural)	Ligman* (Urban)	Bennett†	Siegrist‡
Frequency (flushes per capita per day)	Monday through Sunday	3.6 ± 1.5 (mean + std. dev.)	3.6 ± 0.9	3.6	2.3 ± 0.6
	Saturday and Sunday	3.8 ± 1.6	3.1 ± 1.2		

* Ligman, K., et al. (18)

† Bennett, E.R., et al. (17).

‡ Siegrist, R., et al. (22).

TABLE 21. FREQUENCY OF BATHING

	Ligman* (Rural)	Ligman* (Urban)	Bennett†	Witt‡
Frequency (Number per capita per week)	3.1	2.8	2.2	3.3

* Ligman, K., et al. (18).

† Bennett, E.R., et al. (17).

‡ Witt, M., et al. (35).

Island the water use (gpcd) is 6.2 (24); in Wisconsin 9.3 (35); in Colorado 8.7 (17); and in California 6.6 (24).

Lavatory--

Little data exist on water use for the lavatory (bathroom sink). Studies report total water use for all sinks in the household range from 9.9 gpcd (29) to 18.0 gpcd (24). Bennett (17) reports water use at the sink (including the lavatory) to be highly variable ranging from a "trace" to 48 gallons per event (e.g., washing hair in the lavatory will greatly increase water use); the mean is 1.7 gallons per "sink event" with a distribution of 35 percent kitchen and 65 percent bathroom lavatory use. Based on this apportionment, the lavatory is used daily 3.8 times by adults, 1.9 by teenagers (13-20 years old) and 2.0 by children (1-12 years). This is approximately the same ratio as toilet flushing. Using 1.7 gallons per use and the above frequencies, the range of lavatory water use is 3.2 gpcd to 6.5 gpcd.

Wastewater Generation

The constituents of wastewater considered are BOD_5, suspended solids (SS), total nitrogen and total phosphorus; bacterial concentrations are discussed for potentially reusable bathing wastewater.

Toilet wastewater--

Toilet wastewater constitutes approximately 21 percent of the total residential BOD_5, 37 percent of the total suspended solids, 73 percent of the total nitrogen and 33 percent of total phosphorus. It is estimated that toilet wastewater contains daily fecal discharge of 100-200 gm (net weight) per capita, urine discharge of 800-1,500 ml/capita and toilet paper of 4-20 gm/capita. Associated with these are BOD_5 values of 0.32 gm/gm feces, 0.009 gm/gm urine and 0.20 gm/gm toilet paper (18). Table 22 shows a range of total BOD_5 values, 0.015 to 0.083 lb/capita/day and 0.004 to 0.015 lb/event. Suspended solids data show a range from 0.09 to 0.12 lb/capita/day, or 0.017 to 0.022 lb/event (Table 23). The major nutrients, nitrogen and phosphorus, in toilet wastewater are shown in Table 24. The range for total nitrogen is 0.003 to 0.050 lb/capita/day and for total phosphorus 0.003 to 0.008 lb/capita/day. Study data on nitrogen report 0.003 to 0.010 lb/event. For total phosphorus the value most often used is 0. 001 lb/event. Ligman (18) reports that toilet wastewater suspended solids are 82 percent volatile, total nitrogen is essentially organic and ammonia type, approximately 50 percent of phosphorus is ortho type, and approximately one-half the BOD_5 is removable by filtration.

Bathing wastewater--

Bathing wastewater constributes approximately 8 percent of the BOD_5 and 4 percent of the suspended solids of the total residential waste load.* The range of BOD_5 for bathing wastewater shown in Table 26 is 0.007 to 0.032 lb/capita/day; on an event basis, the range is 0.017 to 0.063 lb. Comparable figures for suspended solids shown in Table 27 range from 0.002 to 0.042 lb/capita/day. The range by event is 0.004 to 0.083 lb/event.

---

* These wastewaters provide the best source of potential wastewater reuse within the household. Table 25 shows the bacteriological characteristics of the bathing wastewater. Analysis of isolates suggests that much of the bacterial contamination of these wastewaters is probably from the natural environment or the natural skin flora; therefore, their presence in the bathing wastewater is not considered of great sanitary significance with respect to potential reuse.

TABLE 22. COMPARISON OF BOD_5 DATA FOR TOILET FLUSHING WASTEWATER

		Ligman*	Bennett†	Laak‡	Witt**
BOD_5 (pounds per capita per day)	Fecal	0.025 (.017-.040)	0.010		0.010
	Urine	0.023 (.018-.037)	0.005		0.014
	Paper	0.004 (.003-.006)	-		-
	Total	0.052 (.038-.083)	0.015	0.052	0.024
BOD_5 (pounds per event)		0.014	0.010	0.004	0.015

* Ligman, et al. (18).

† Bennett, et al. (17).

‡ Laak, R. (37).

** Witt, et al. (35).

TABLE 23. COMPARISON OF SUSPENDED SOLIDS DATA FOR TOILET FLUSHING WASTEWATER

		Ligman*	Bennet†	Witt‡
Suspended Solids (pounds per capita per day)	Fecal	.048 (.040-.062)	.048	.010
	Urine	-	-	.014
	Paper	.020 (.010-.040)	.032	-
	Total	.068 (.050-.102)	.080	.024
Suspended Solids (pounds per event)	Total	.018	.022	.017

* Ligman, et al. (18).

† Bennett, et al. (17).

‡ Witt, et al. (35).

TABLE 24. COMPARISON OF TOTAL NITROGEN AND TOTAL PHOSPHORUS DATA FOR TOILET FLUSHING WASTEWATER

		Ligman*	Laak†	Bennet‡	Witt**
Total Nitrogen (pounds per capita per day)	Feces	.003 (.001-.005)		.004	.003
	Urine	.034 (.002-.045)		.008	.006
	Paper	-		-	-
	Total	.037 (.003-.050)	.032	.012	.009
(per event)	Total	.010	.006	.003	.006
Total Phosphorus (pounds per capita per day)	Feces	.001 (.001-.004)		.002	.001
	Urine	.002 (.002-.004)		.001	.001
	Paper	-		-	included above
	Total	.003 (.003-.008)	.001	.003	.002
(per event)	Total	.001	.001	.001	.001

* Ligman, et al. (18).

† Laak, R. (37).

‡ Bennett, et al. (17)

** Witt, et al. (35).

TABLE 25.* BACTERIOLOGICAL CHARACTERISTICS OF BATHING WASTEWATER

Organism	Range (per 100 mℓ)	Geometric Mean (per 100 mℓ)
Fecal Streptococci	1-70,000	44
Fecal Coliforms	1-2,500	220
Total Coliforms	70-8,200	1,100

* Siegrist, et al. (22).

TABLE 26. COMPARISON OF BOD_5 DATA FOR BATHING WASTEWATER

	Ligman*	Bennett†	Witt‡
BOD_5 (pounds per capita per day)	0.020 (.011-.032)	0.007	0.007
BOD_5 (pounds per event)	0.039 (.022-.063)	0.023	0.017

* Ligman, et al. (18).

† Bennett, et al. (17).

‡ Witt, et al. (35).

The range of BOD_5 and suspended solids values for bathing is not reduced by considering per event basis. This indicates the wastewater residuals from an individual bathing event are highly variable as contrasted to less variable toilet flushing wastewater when considered on a per event basis.

Lavatory wastewater--

Minimal data exists on segregated lavatory characteristics; a summary of available data is shown in Table 28. The nutrients are zero but the BOD_5 and suspended solids contribution is greater than from bathing. Some typical products which may be introduced into the lavatory wastewater are shown in Table 29. Data for lavatory wastewater residuals indicate contributions of approximately 8 percent of the BOD_5 and 6 percent of suspended solids to the total residential liquid residual.

Energy

Small electrical appliances used for personal upkeep are shown in Table 30; estimating the total time of use per year, the annual energy use of these appliances is calculated as 27.3 kwh.

The major energy use in the bathroom is associated with water heating; it is estimated that approximately 40 percent of household hot water use occurs in the bathroom (24). Seasonal variation exists with winter use of hot water for bathing being 30 percent greater than summer use; hot water use in summer is approximately 55 percent of total bathing use. Based upon an aggregate of bathing and lavatory use, a range of 9.5 to 26.5 gpcd is calculated. The amount of hot water associated with this range is 5.2 to 14.6 gpcd and 6.8 to 19.0 gpcd summer and winter use, respectively.

LIVING AND ENTERTAINMENT

Television is the major energy user in this category (but still a small percentage of total household energy use). A color television uses more energy than a black and white and a tube television uses more than a solid state as is shown in Table 31. The "instant-on" feature of many televisions can double the amount of electricity used. This feature is expected to disappear from new sets.

Other items which contribute to energy consumption under this function are stereos, radios, and electric hobbies and games. A stereo uses the same amount of electrcity per hour as does a black and white tube television. Radios, electric hobbies, and games use much less. Slide or film projectors are another, minor, energy-user.

Entertaining guests is a major activity for some families. Depending upon social tastes and income, entertaining can influence other functions, such as the kitchen and washing and cleaning, in terms of the amount of energy, foods and other materials consumed and the quantities of residuals produced from cans and bottles, food waste and packaging, wastewater from dishwashing

TABLE 27. COMPARISON OF SUSPENDED SOLIDS DATA FOR BATHING WASTEWATER

	Ligman*	Bennett†	Witt‡
Suspended Solids (pounds per capita per day)	0.012 (.002-.042)	0.002	0.005
Suspended Solids (pounds per event)	0.027 (.004-.083)	0.006	0.013

* Ligman, et al. (18).

† Bennett, et al. (17).

‡ Witt, et al. (35).

TABLE 28. LAVATORY WASTEWATER CHARACTERIZATION

	BOD_5	Suspended Solids	Total Nitrogen	Total Phosphorus
Residual (pounds per capita per day)	0.011	0.009	0.0	0.0

* Bennett, et al. (17).

TABLE 29. POTENTIAL CONTRIBUTION OF LAVATORY INPUT MATERIALS

		Ratio*	COD	BOD_5	Total PO_4-P
Hair Care	Fitch Shampoo	b	1.024	.084	0.0
	Wella by Balsam	b	4.720	.026	0.0
	Breck Setting Lotion	b	0.054	xx†	0.0
Hand Soap	Dial	a	2.355	1.809	0.0
	Unknown	a	2.375	1.840	0.0
Tooth Care	Ultra Brite	a	3.171	0.200	0.098
	Tooth Powder	a	2.602	0.082	0.0001

* a = ratio mg of pollutant product to mg of product;
b = gm of pollutional product to ml of product.

† xx = material was toxic to BOD_5 testing organism.

Source: Bennett, et al. (17).

TABLE 30. ENERGY USE FOR PERSONAL UPKEEP*

Appliances	Wattage	Use Time/Year (hrs)†	Killowatt-hours/year
Hair Dryer	600	39	23.4
Heat Lamp	250	13	3.2
Shaver	14	52	0.7
Total			27.3

* Association of Home Appliance Manufacturers, Edison Electrical Institute (9).

† Meta Systems average estimate based on much diverting figures in literature.

TABLE 31. ENERGY CONSUMPTION OF TELEVISION

	Average Wattage	Energy Consumption*		% Saturation†	
		kwh/year	10^3 Btu/cap/day‡	1970	1990
Black and White	50 - 160	100 - 330	.27 - .88	99	85
Color	175 - 300	350 - 525	.93 - 1.4	51	98

* The values of the range are comprised of average values given for tube (upper bound) and solid state (lower bound) in reports of the Edison Electric Institute (9).

† "Project Independence" (14).

‡ Assumption of 3.5 people/household.

and so forth. Large groups of people can contribute greatly to the cooling load as can extensive use of the stove and oven for food preparation. Finally, personal hobbies can range from the passive non-consuming sort (stamp collecting) to a moderately energy-using sort (sewing) to larger energy and material users such as wood-working and carpentry (assuming power tools). Although there are no data on these activities it is reasonable to assume that on the average resource utilization is insignificant and residuals generation is minimal

OUTDOORS

The two most important activities within the outdoors function are gardening and recreation. Of these, gardening uses more resources, particularly water, and generates a greater volume of residuals in the form of yard clippings, grass and leaves. In the warmer part of the country recreation might include a swimming pool, but its water use is a rather small component of total outdoor water consumption.* The greatest users of energy outdoors are power tools for gardening, swimming pool filter pumps and heaters, and lighting for entertainment and recreation. However, the requirements are negligible and quantitative estimates are not made under the outdoor function. Also, the wastewater generated directly by outdoor activities is insignificant, except in the cases of consistently over-watering the lawn or garden.

One phenomenon (as opposed to activity) which is included under the outdoors function is that of stormwater runoff. Although not directly the consequence of any particular activity, it is often as great a source of wastewater as all the other water use activities.† Moreover, because of the peaking character of storm runoff the environmental effects can be far more serious. Below, efforts to estimate runoff from residences are discussed following a review of outdoor water use and solid residuals studies.

Water Use

There are tremendous variations in the estimates of outdoor water use reported in the literature. Lawn watering and the irrigation of plants and shrubs, which account for almost all that is used, differ across regions, vary with the season, and demonstrate a demand behavior which is both price and income elastic (39). In addition, the amount needed to care for lawns and shrubs depends on the area of yard available for gardening. Linaweaver (40)

---

* Lumped in a category which includes car washing and cleaning of driveway, sidewalks and streets; water for swimming pool use is less than 10 percent of outdoor water consumption. California Department of Water Resources (38).

† For example, a residence on a one-quarter acre lot in a region with an average annual rainfall of 40 inches of which 40 percent runs off would generate an average daily flow of almost 300 gallons. This is equivalent to the wastewater flow of a family of four persons.

reports that in the West residential units use twice as much water as comparable eastern units and that for the nation as a whole the ratio of summer use to average annual use is approximately 2.5. Discussing the results of a study on 39 communities, Howe and Linaweaver estimated that for a subset of these communities in the West the outdoor water use in the areas with water meters was 186 gal/day per dwelling unit and in the unmetered areas the figure was 420 gal/day per dwelling unit while indoor water use differed by less than 5 percent. Augmenting the data with metered communities from the East they estimated that the price elasticity was -1.16 and the income elasticity was 1.07 (39). These elasticities showed that outdoor use of water is far more sensitive to price and income than is indoor use.

In reviewing several studies of residential water use Milne concludes that a reasonable estimate of outdoor use is 70 gpcd (41). A recent review of water demand in California, employing data from 1972, reports that total residential use was approximately 151 gpcd of which 66 gal (or 44%) was consumed outdoors primarily for landscape irrigation (38). Andrews (42) found in a study of three New Hampshire towns that in two of the towns fewer than 10 percent of the residences watered the lawns at all. However, in the demand study of Howe and Linaweaver (39), the authors report that during the summer the mean daily outdoor water use in the unmetered eastern communities of their sample was over 1,000 gallons.

Clearly the variation is significant. Nonetheless, except for the case of the New Hampshire towns, most residences use a considerable amount of water outdoors during those seasons when the weather is favorable. In some regions that implies a substantial demand throughout the year.

Solid Residuals

The weight of solid waste generated by a household in landscaping and gardening varies widely. As with outdoor water use, seasonal, regional, and income effects and type of residence are important. However, there are few data available and most estimates are not based on direct measurements, but on educated guesses or very small samples. For example, in three studies containing figures on the composition of residential solid waste for Santa Clara County, California, the estimate of the percentage by weight of yard wastes in one study was 23.8 percent, in the second study it was 9 percent and in the third study it was 34.5 percent (43, 44, 45). Such apparent discrepancies are not unusual and may depend on nothing more than the time of year when the data were collected. In a study of municipal solid waste in Springfield, Massachusetts, the average percentage of garden waste varied considerably over the city for the four seasons. In the winter it was 0.0 percent, in the spring 10.0 percent, in the summer 21.0 percent, and in the fall 34.5 percent (46). Converting these figures to pounds per household per week (lb/HH/wk) increases the variation.

	lb/HH/wk
Winter	0.0
Spring	5.4
Summer	9.7
Fall	25.1

Estimates of these generation rates varied considerably with the housing characteristics of the city; clear correlations, however, could not be established. With the kind of range exhibited by the estimates it is impractical to put forward a single figure to be used in all circumstances requiring the calculation of solid waste load. Nonetheless they do show the importance of yard wastes as a component of residential solid waste and demonstrate that at certain times of the year leaves and lawn clippings may be the major items in refuse.

Stormwater Runoff

Studies have shown that significant relationships exist among certain gross characteristics of residential areas and the quantity and quality of stormwater runoff. For example, the data from Sartor and Boyd (47) and the subsequent re-analysis by Sutherland and McCuen (48) distinguish between single and multi-family residential areas for the purpose of predicting accumulation rates of dust and dirt per curb mile. Likewise relationships between population density and street length per acre (49) and percent imperviousness have been developed (48). These show that as density increases street length/acre and percent imperviousness increase and hence the total pollutant load and runoff/acre increase. Young (50) has employed a simple model to evaluate the impact of total population and population density on runoff and water quality. However, these aggregate relationships obscure issues of fundamental importance when the individual residence or subdivision is considered in detail. The impacts on runoff at this level are not well known, although recently some work has been proposed in this area (51).

MAINTENANCE

Under the function of maintenance are such activities as upkeep and repair of the interior and exterior of the residence and care and cleaning of an automobile. Maintenance of a residence requires small amounts of energy and water and generates little in the way of residuals. Although no data are available it is safe to assume that amounts of resource uses and residuals created are negligible. However, an automobile, depending on the habits of its owner, may be a different matter.

Automobile Maintenance

Washing a car can require between 150 and 300 gallons of water.* If the car is washed on an impermeable surface or in the street, a substantial portion of the water may run off into the sewer system carrying with it the detergent, grit, salt, paint and other forms of debris which are washed from the car and scoured from the driveway and street. If the car is washed on a permeable surface, most of the water probably infiltrates and there is little runoff.

---

* Assume flow to be between 5 gal/min and 10 gal/min and time to wash car 1/2 hour.

However, this is another case in which there are no data. The best estimates available which may be applicable are from a study which includes some data on self-service auto washers. The pollutants which were measured were total solids, total volatile solids, suspended solids, volatile suspended solids, BOD_5, and oil and grease (52). The results appear in Table 32. The concentrations of total solids, total volatile solids, suspended solids, and grease are very high. However, the study reports that the average volume of water used per car is only 20 gallons which is much lower than our estimates of the water needed when washing a car at home. In the latter case it is reasonable to assume that the concentration of pollutants would be much lower.

One other auto maintenance activity generates an important residual. The backyard oil change means that used lubricating oil must be poured in the sewer, flushed down the toilet, spread on the ground or taken to a collection facility. Recent estimates of the annual automotive consumption of motor oil place the figure at 1.1 billion gallons. A little less than half is burned or somehow lost in the process of lubrication leaving 600 million gallons to be reused or disposed of in some way or other (53). For a long time most of the oil was drained and replaced at service stations where the used oil was stored and eventually hauled off to be treated or rerefined for use as a fuel or lubricant or in the manufacture of asphalt. However, today almost half of the automotive lubricating oil is sold by discount stores and other outlets (54). People are now changing the oil in their cars and the used oil is being dumped along with the lead, copper, barium, zinc, phosphorus, tin, or chromium it may contain. This is another case where there are no data on the magnitude or distribution of the residuals, although it is probably reasonable to assume that in certain areas the problem may be important.

TABLE 32. TYPICIAL POLLUTANT CONCENTRATIONS IN WASTEWATER FROM SELF-SERVICE AUTO WASHERS OVER A 10 MONTH PERIOD
(all units mg/l)

	Minimum	Maximum	Average
Total Solids	729	3,334	2,006
Total Volatile Solids	207	871	456
Suspended Solids	95	840	386
Volatile Suspended Solids	25	116	72
BOD_5	15	166	57
Grease and Oil	38	200	86

SUMMARY

Organizing the use of resources and the generation of residuals by function allows us to: (a) identify the important functions for each resource and residual; (b) observe the great variance of the rates even within functions; and (c) illustrate, where data allowed, links between certain pairs of functions and levels of resources used or residuals generated.

In the case of resources, the greatest energy user, given current levels of insulation (e.g., FHA 1973) and central heating and air conditioning systems, is space heating/cooling. In those parts of the country with at least 5,000 degree days, heating can account for more than 75 percent of the energy requirement. The second most important use of energy is water heating. In a household with four persons the requirement can range between 20 x 10^6 Btu/yr and 45 x 10^6 Btu/yr. Depending on space heating, water heating can use from 10 percent to over 50 percent of the household's energy. All other functions tend to be marginal, in that any one of them usually accounts for less than five percent of the total. Nonetheless, such items as frost free refrigerators and freezers and kitchen ranges with standby pilots can use more energy than comparable models without these features.

Water is used in the greatest quantities in the bathroom. In most homes the toilet accounts for somewhere between 30 percent and 50 percent of the water used. Bathing and showering are also important. Other significant water using activities are clothes and dish washing. In addition, lawn watering can be very substantial, particularly in the spring and summer. One study cited above reported, for a group of eastern communities, a rate of over 1,000 gallons/day for outdoor residential use during the warm months.

The gaseous residuals and the hydraulic load of the liquid residuals are, to a large extent, proportional to the energy used (for space heating and water heating) and the water used respectively. Clearly the composition of the gaseous effluents depends on the type of fuel burned and the efficiency of the furnace but the primary sources of the gases are space heating and water heating. Minor sources are such items as gas ranges and dryers. Little if any water is consumed in household activities; virtually all becomes part of the liquid waste stream. The other constituents of the liquid residuals, particularly BOD_5 and SS, have their source in the bathroom and the kitchen (an important source if there is a garbage grinder). Outdoors, stormwater runoff may be a very important source of liquid residuals.

Placing solid residuals under the kitchen function obscures the wide range of actual sources. However, a review of the composition estimates presented above and in Appendix A suggests that all functions might make some contribution. Important functions are kitchen (organics, glass, metal and some paper and plastics), living and entertainment (newspapers) and outdoors (leaves, grass, etc.)

The great variance in the rates of resource use and residuals generation is remarkable. As remarkable is the fact that so little of the variance is explained in the studies which report use and generation rates. In order to provide some perspective on the great range of estimates, we present in Section 7 baselines in which we specify the characteristics of the structures which determine the amounts of resources used and residuals generated.

Two relationships can be established linking resources or residuals across functions. Neither is very surprising. First, the energy required for water heating is a function of the volume of water used for bathing, dishwashing and clothes washing. Second, the components of the liquid residuals and the solids residuals depend on whether or not there is a garbage grinder in the residence. Limited data and the fact that most empirical resource use studies concentrate on only one item (e.g., energy) make the identification of other links difficult.

SECTION 6

CONSERVATION MEASURES AND THEIR DIRECT COSTS

INTRODUCTION

Conservation can be achieved through technological or behavioral changes. It can occur at the point of use, where the savings may be dramatic, and at the point of generation, where residuals may be recaptured, recovered and reused rather than discarded. As has been pointed out in Section 5, for many activities resource use and residuals generation are highly dependent upon such factors as region of the country, socio-economic characteristics, climate and season. However, in spite of wide variations in use and generation rates, structural improvements, in particular, and other conservation measures and practices can result in impressive reduction in waste of resources and the generation of residuals.

Often the choice of construction materials, the soundness of a structure, or the design of appliances can significantly alter the amount of energy, water, or other resources consumed by a particular household function. Similarly, the capture of residuals for reuse often requires physical modifications in residences. Plumbing, for instance, must be specifically designed to transport, store, and, in some cases, treat reusable wastewaters; storage space or collection sites encourage solid waste separation; waste heat can be recaptured with special devices.

In a complementary fashion, the preferences of residents -- e.g, the temperature at which thermostats are set, the length of time and manner in which appliances are utilized, and the volume of hot water used in bathing -- can affect the use of resources. Although the importance of individual behavior is acknowledged, in this section most of the emphasis will be placed on structural modifications and improvements in the efficiency of devices.*

SPACE HEATING AND COOLING

Structurally, the most effective measure for reducing energy use in heating and cooling in residences is insulation. In Table 8 of Section 5 we have shown that for a single family house the addition of 3 5/8" of insulation material in walls, 2" around the floor, and 4" in the ceiling can

---

* The one exception to this is the case of solid residuals recovery. Individual behavior is essential for conservation.

reduce heat loss by more than 50 percent compared with the uninsulated house. The effect on cooling load is comparable (see Table 9 of Section 5). Perhaps the most obvious choice after insulation is the addition of storm windows. Their effectiveness in reducing heat loss is 10 to 20 percent. Tables 33 (Heating) and 34 (Cooling) contain the incremental heat loss reduction for the addition of insulation from 1" to 24" in the ceiling and from 1" to 5 5/8" in the walls and heat loss reduction resulting from the installation of storm windows. Cost estimates appear in Table 35.

The high levels of insulation in the ceiling require a well ventilated space between ceiling and roof beams. In the walls, more than 3 5/8" of insulation can be accommodated only by using 6" studs or by attaching insulation board to the outer surface of the stud wall. For our cost calculations we assume that 6" studs are used.

In addition to insulation and storm windows, energy can be saved by modifying the furnace, placement of windows, trees and shrubs, the color of the building, and the use of drapes, shades, and awnings. The modification of conventional furnaces is a measure which is promising although somewhat controversial. Such modifications usually rely on some type of device which uses the flue gas to preheat the water or air before it enters the boiler or heating chamber of the furnace. Advocates claim that fuel use can be reduced by about 20 percent (55). Cost estimates for such devices vary between $200 and $400.

The placement of windows is especially important in summer cooling since the major source of heat gain is solar radiation rather than the indoor-outdoor temperature difference. It can be minimized by having the major portion of glass area facing north and south. The cooling load through an unshaded east or west window is three times as much as through a north window and twice as much as through a window facing south. For example, the cooling load of a 1,500 sq ft house with all its windows (220 sq ft) on the east and west sides of the building is approximately 30 percent greater than the same house with its windows facing north and south. Although the placement of windows to reduce cooling load might increase heat loss in the winter, it is less important.

Another factor to consider in window placement is the direction of prevailing winds. A window facing a 30 mph wind will lose at least ten percent more heat than one facing a 15 mph wind. The lay of the land can also impact energy conservation. For instance, mounding can act as a windbreak and decrease heat loss through windows and walls. However, the better the structure, the lesser will be the effect of high winds and windbreaks.

Landscaping is sometimes a very effective method of energy conservation, serving as a windbreak and a shading device. Deciduous trees will service to shade walls and windows in summer while allowing solar radiation to penetrate in winter. The heat gain of an east or west facing wall or window, if shaded, is reduced to that of a north-facing wall. In the case of the window, the shading reduces heat gain by about 67 percent. Also, the branches and trunks of trees will act as partial windbreaks in winter, particularly if trees are planted in clusters.

TABLE 33. INCREMENTAL HEAT LOSS REDUCTION*
(BTU/SQ FT FLOOR SPACE/DEGREE DAY)

Roof Insulation:	Single-Family 1-story	Single-Family 2-story	Townhouse Row	Low Rise 3-story
1st inch	2.5	1.2	1.2	.7
2nd inch	1.9	1.0	.9	.6
3rd inch	.6	.3	.3	.2
4th inch	.6	.3	.3	.2
5th inch	.3	.1	.1	.1
6th inch	.3	.1	.1	.1
9th inch	.39	.18	.19	.11
12th inch	.19	.09	.09	.06
15th inch	.12	.06	.06	.04
18th inch	.08	.04	.04	.02
21st inch	.06	.03	.03	.02
24th inch	.06	.03	.03	.02
Wall Insulation:				
1st inch	1.9	2.8	1.4	1.2
1 1/2 inches	.5	.8	.4	.3
2nd inch	.2	.2	.1	.1
3rd inch	.3	.5	.4	.2
3 5/8 inches	.2	.2	.1	.1
4th inch	.08	.13	.06	.04
5th inch	.15	.23	.12	.07
5 5/8 inches	.07	.10	.05	.03
Storm Windows	2.1	2.1	1.7	1.7

* To find total annual fuel use reduction due to any one measure, multiply the reduction in the above table by number of heating degree days (Appendix B, Table B-2) for the area and by the total floor area for the structure. (All reductions are incremental and therefore additive, i.e., the savings for the 3rd and 4th inches of insulation on a single-family one-story are equal to 0.6 + 0.6 = 1.2 Btu/sq ft Floor Space/Degree Day.) This gives the total annual reduction for the structure assuming a 65° indoor temperature and 100 percent fuel use efficiency. To adjust for other temperatures use Table B-3 (Appendix B).

TABLE 34. COOLING LOAD REDUCTIONS
(90°F OUTDOOR,* BTUH/SQ FT FLOOR SPACE†)

Roof Insulation:	Single-Family 1-story	Single-Family 2-story	Townhouse Row	Low Rise 3-story
1st inch	4.8	2.2	2.3	1.4
2nd inch	3.7	1.8	1.8	1.2
3rd inch	1.0	.5	.05	.3
4th inch	1.0	.5	.05	.3
5th inch	.5	.2	.2	.2
6th inch	.5	.2	.2	.2
9th inch	.568	.270	.274	.163
12th inch	.284	.135	.137	.082
15th inch	.183	.087	.088	.052
18th inch	.121	.058	.059	.035
21st inch	.081	.038	.039	.023
24th inch	.081	.038	.039	.023
Wall Insulation:				
1st inch	2.4	3.6	1.9	1.2
1 1/2 inches	.7	1.0	.5	.3
2nd inch	.2	.2	.1	.1
3rd inch	.3	.5	.3	.2
3 5/8 inches	.2	.2	.1	.1
4th inch	.074	.13	.074	.037
5th inch	.15	.223	.112	.074
5 5/8 inches	.074	.112	.056	.037
Storm Windows	2.9	2.9	2.0	2.0

* To convert for 85° outdoor: multiply above roof values by .86, above wall values by .73, and above window values by .87.

† To find total annual reduction for any measure, multiply above coefficient by total floor area of the structure and by the number of cooling hours per year found in Table B-2 (Appendix B).

TABLE 35. COSTS OF INSULATION AND STORM WINDOWS (IN NEW HOUSING)

Ceiling & Wall Insulation	Cost* ($/ sq ft)	Total Cost Ceiling†	Total Cost Walls‡
1"	.25	$435	$265
1 1/2"	.27	470	286
2"	.29	505	307
3"	.34	592	360
4"	.38	661	403
5"	.43	748	456
6"	.48	835	509

Floor Perimeter Insulation	Incremental Cost ($/linear ft.)	Total Cost Floors**
1"	.45	$72
1 1/2"	.55	88
2"	.66	106

Storm Windows	Incremental Cost ($/ sq ft)	Total Cost Windows††
-	2.00	$440

Footnotes on following page

Footnotes for Table 35

* For levels of wall insulation greater than 3 5/8", studs must be increased from 4" to 6". The above figures do not include these stud costs. However in our calculations in Section 7 we use studs; $0.43 per linear foot for 2x4's and $0.56 per linear foot for 2x6's. This represents a total difference of $125.00, or $0.12 per square foot of wall area for our 1-story single family home, assuming the studs are spaced 16" on center. For levels of roof insulation greater than 6" we use $0.32 per square foot for 3" increments and $0.48 per square foot for 6" increments.

† assume roof area of 1740 sq ft.

‡ assume wall area minus windows of 1060 sq ft.

** assume perimeter of 160 ft.

*** assume window area of 220 sq ft.

The color of both roof and walls can reduce heat gain due to solar radiation. A light-colored wall will absorb much less heat than a dark wall and can reduce the total heat gain for an unshaded house by about four percent. Since roofs usually accumulate dirt, a light-colored roof may not remain so; nonetheless, it can reduce total heat gain by 10-15 percent.

Awnings will have the same effect as shade trees in reducing solar radiation through windows. Indoor shades such as venetian blinds and curtains are also effective. They can reduce heat gain by 30-40 percent on east, west or south walls, and 25 percent on north-facing walls. The difference is greater on the east and west walls than on the others, since the initial radiation is greater. Table 36 lists several measures which reduce cooling load by reducing solar radiation through windows. Cost estimates are not made because they can vary too widely.

Solar Heating and Cooling

Solar heating and cooling systems are becoming economically attractive. Although the costs and design features have not yet stabilized on the consumer market, there are two widely accepted systems for which general concurrence exists on likely future costs.

In one system, water (treated with a chemical anti-freeze) circulates through collectors which are composed of black-surface metal plates enclosed by glass. Solar radiation absorbed by the plates is transferred as heat to the water which is then stored in a large well insulated tank (called the "store"), usually located in the basement of the residence. From the store, the heated water is piped throughout the house and a variety of heat-exchange systems can be used to warm the room air. Alternately heat from the store may be transferred to a separate water circulation system for distribution throughout the structure. Thermostats control the rate at which the water circulates through the collectors and through the heating system. The other system uses air rather than water. In principal it is the same except that air is heated in the collectors, blown into a store of stones which trap the heat, from which heated air is carried into the living space.

In either system, a conventional heating unit is usually required for those times when the heat store is depleted. Also, most systems require some auxiliary energy source to operate the pumps, blowers and other mechanical features. "Passive" systems, which do not incorporate such features, have been used but they require the occupants of a residence using such a system to accommodate themselves to the limits of the system (56).

Test runs of a solar cooling system in Colorado are yielding encouraging results (57). Similar to the water-based heating system, the cooling system uses a heat exchanger to transfer heat from the collector fluid to the storage fluid. The distribution system uses forced air. Hot water from the storage tank is piped to the cooling unit where the water provides the energy to operate a standard three-ton lithium bromide absorption air conditioner adapated for hot water.

TABLE 36. REDUCTION DUE TO SWITCHING WINDOW EXPOSURE AND INSTALLING SHADING DEVICES (BTUH/SQ FT WINDOW)[1,2,3]

For each square foot of window switched from east or west, multiply by:

	To:	Single Window	Storm Window
1.	North	75	64
	NE/NW	32	29
	SE/SW	14	12
	South	53	46

For each square foot of unshaded window affected by the following shading devices multiply by:

		Drapes or Venetian Blinds	
2.	North	86	73
	NE/NW	64	53
	E/W	43	34
	SE/SW	53	43
	South	75	62
		Roller Shades Half-Drawn	
3.	North	82	69
	NE/NW	53	39
	E/W	26	18
	SE/SW	38	29
	South	68	53
		Awnings	
4.	North	79	72
	NE/NW	78	70
	E/W	77	70
	SE/SW	78	70
	South	79	72

1. After the values in the table are multiplied by the square feet of window affected, to find the annual reduction in cooling load, multiply by cooling hours/year for your city.

2. Measure 1 is additive with either 2, 3, or 4. But 2, 3, and 4 are not additive with one another.

3. These values are valid for average outdoor heating season temperatures between 85° and 100°.

Debate continues about the amount of heating or cooling that a solar system can provide for a residence. Massdesign estimates that the systems they considered can achieve from 43 percent to 88 percent savings in the amount of auxiliary fuel required for space heating and water heating (56). Arthur D. Little, Inc., however, found in a study for ASHRAE that only 30-50 percent of the space heating could be economically provided by a solar system on the basis of their cost calculations (58).

The Colorado study found from actual tests in prototype homes that the solar systems could carry 40 percent of the normal cooling load (between August 1, 1974 and January 31, 1975), 86 percent of the space heating load and 68 percent of the domestic water heating load. However, heat losses from the store and circulation system accounted for almost half of the cooling load during August. Modification of the system subsequently raised the percent of solar cooling provided to 55.8 percent (57).

Costs of Solar Systems

Studies by Arthur D. Little, Massdesign and Colorado State University have assumed that collectors cost $6-7/sq ft, installed. Massdesign and the Colorado study group predict that the cost of collectors should drop to $4/sq ft as designs are simplified, the quantity of material used is reduced and the manufacturing labor is decreased. Massdesign cost estimates for several of their synthetic cost simulations appear in Table 37. The Colorado study found that the typical system can provide 70 million Btu/year for a cost of $6-7/million Btu (57).

According to the same study a 3-ton solar cooling unit costs about $2,000 to provide 250,000 Btu seven hours a day at peak capacity using the same solar collector and storage (57). In a report by the National Bureau of Standards, the cost estimate for a similar unit with necessary auxiliary equipment was closer to $3,000 (59).

WATER HEATING

Potential savings in energy use by water heaters can be obtained in three areas: design, installation and use. Design improvements would increase the energy efficiency of water heaters by reducing the heat loss with added insulation and increasing the efficiency of gas burners and associated heat transfer systems. Burner efficiency can be improved by attaining more complete combustion and through the use of multiple-stage burners which allow the unit to match heat loads with burner use more effectively. Improved heat transfer will reduce the temperature of the exhaust gases, reducing heat lost "up the stack." The industry appears to be moving toward increasing efficiency. This can be seen by comparing current ASHRAE standards with those which will be in effect in 1977 (13). For electric heaters, the current standard allows a maximum stand-by heat loss of six watts/sq ft of heater surface (20.5 Btu/sq ft) and will be reduced to four watts/sq ft (13.6 Btu/sq ft). For gas and oil water heaters the required recovery efficiency (fuel to hot water) is 70 percent and will be increased to 75 percent. Maximum stand-by heat loss in percent of energy use is 4.3 + 67/V where V is the

TABLE 37. SOME EXAMPLES OF COST ESTIMATES FOR SOLAR HEATING SYSTEMS*

Home†	Net Heated Area (sq ft)	Net Collector Area (sq ft)	System Cost ($)	Energy Supplied (10^6 Btu)‡	Cost/Effect. ($/$10^6$ Btu)
Solar Cape -Water	1,844	715	6,900	71.3 (69)	9.7
Solar Cape -Water (Low Cost)	1,844	400	2,800	43.2 (42)	6.5
Solar Saltbox -Water	1,844	1,215	8,750	85.2 (88)	10.3
Solar Saltbox -Air	1,844	965	5,900	67.5 (84)	8.7
Solar Townhouse	1,650	715	5,500	55.7 (93)	9.9

* See Reference (56)

† The names in the list refer to the style or type of structure (e.g. cape, saltbox) and the type of solar system (water or air).

‡ The numbers in parentheses are the percentage of the total Btu requirement.

heater volume, in gallons. This will be reduced to 2.3 + 67/V in 1977.

Estimated effects of these improved design standards are indicated in Table 38 for electric and gas heaters delivering 80 gal/day at 120°F with an inlet water temperature of 60°F and a room temperature of 70°F. Under the assumed conditions the improved standards will reduce wasted heat by 20 to 30 percent and overall hot water energy demand by five to six percent. Yet a flow-through heater can be more efficient (close to 80 percent) and can eliminate the need for a stand-by pilot (60).

In addition to the performance of a water heater, its size and location are important. Over-capacity or under-capacity can increase substantially stand-by heat loss. The location of the heater should be selected to avoid a long run of pipe line. Heat loss may be further limited by insulation of the circulating line.

For any given hot water heater installation, energy use can be reduced by lowering the hot water temperature. In the past, heaters have often been set at 140-150°F. A value of 120°F is now generally recommended for energy conservation. For the electric heater in Table 38 the 120°F temperature results in 28 percent lower conduction loss. This results in a lower total water heating energy use of above five percent. One problem to consider in setting the water temperature lower is the effect on hot water demand. If use habits do not change, then certain activities such as bathing will demand more hot water in order to obtain the same temperature.

Water conservation practices, discussed elsewhere for the individual activities, will reduce hot water demands and energy use. Further conservation of energy may be affected by controlling the amount of time the heater is functioning. For example, if bathing, dishwashing and laundry activities could take place in either the morning or at night (preferably at night to avoid peak use), the heater could be turned on several hours before this time and then disconnected after use.

The cost of a more efficient storage water heater can vary. Currently a 40 gallon gas heater costs from $130 to $180, depending on the quality of insulation and burner (the cost of installation is additional). Prices increase about $10 for each 10 gallon increase in storage capacity. Electric storage heaters are $30 to $40 less than comparable gas units. A reasonable estimate of the cost differential for a heater designed according to the improved ASHRAE standards is $100 for a 50 gallon unit. A flow-through unit can cost in the neighborhood of $400 (58). The cost of insulating hot water lines is usually between $0.50 and $1.00 per foot.

Solar Water Heating

Solar water heating can be provided as part of a solar space heating system or as a separate system. In either case the water temperature attained from solar heating alone is generally too low for some hot water uses, thus the solar system functions largely as a preheater; additional heat must be provided either in a storage heater or at the point of use.

TABLE 38. EFFECT OF IMPROVED ASHRAE HEATER DESIGN STANDARDS

	Electric Heater			Gas Heater		
	Current Standard (Btu/day)	1977 Standard (Btu/day)	% Reduction	Current Standard (Btu/day)	1977 Standard (Btu/day)	% Difference
hotwater	40,000	40,000	-	40,000	40,000	-
pilot	-	-	-	9,600	9,600	-
heat loss*	8,700	6,100	30	21,300	16,900	21
Total	48,700	46,100	5	70,900	66,500	6

* Includes conversion loss and stand-by loss.

Notes: Assumed conditions:

water inlet temperature	= 60°F
water outlet temperature	=120°F
room temperature	= 70°F
hot water use	= 80 gal/day
heater size, gas	= 50 gal
heater size, electric	= 66 gal

According to the Arthur D. Little study (58), solar water heating systems designed to provide the least amortized cost per unit of energy provided would cover from 30 to 50 percent of the thermal requirements for water heating, depending upon the region of the country and type of structure. The associated collector areas ranged from 30 to 55 sq ft/dwelling unit. The solar energy systems considered in the Massdesign study (Table 37) incorporated water heating units. Over the course of a year's operation the systems provide a large portion of the water heating energy reqiurement. However, the costs of the water heating components were not accounted for separately. Since we do not have costs for individual units we have assumed the ratios of cost/energy unit supplied which are reported in the Massdesign work are applicable to water heating (56).

LIGHTING

Two ways to conserve energy in lighting are to make maximum use of sunlight and to illuminate only the areas which are needed for specific activities. They can be combined in the placement and design of windows and rooms.

Although all exposures receive adequate light, certain exposures are more conducive to the use of sunlight than are others. Eastern and western exposures receive good morning and afternoon sun. However, light from a low lying sun, to which both these exposures are subject, is difficult to control and may produce glare and excessive heat. Vertical windows are best for these exposures. A southern exposure receives the most sunlight. Moreover, the sunlight is at a high angle which does not produce glare and offers, in conjunction with high window placement, the best opportunity for lighting a whole room. Horizontal windows are best for this exposure. Northern exposures receive no direct sunlight.

When sunlight is not available and a specific task has to be done it is best to light the immediate area rather than the whole room. For normal living space in which no specific task is being done, light should be kept at a minimum. Lighter finishes on ceilings, walls, floors, and even furniture can increase the utilization of available light by providing greater reflectances.

There are several kinds of bulbs used for lighting, although in residential use incandescent and fluorescent are the most popular (see Table 39). Long lasting incandescent bulbs should be used sparingly. They are very energy inefficient compared to "normal bulbs." Whenever possible, fluorescent should be used rather than incandescent since the former is three times more energy efficient than incandescent.* During the cooling season lighting will

---

* However, fluorescent lighting may be harder on the eyes, one reason being that it is nearer the blue of the spectrum. The focal point of blue light is slightly in front of the retina and so some blurring occurs. In many buildings fluorescent light has been made slightly yellow, thereby bringing it nearer the red end and easing its effect upon the eye. But when this is done, efficiency decreases.

TABLE 39. LIGHT SOURCE EFFICIENCIES

Incandescent Lamp	
60-watt general service lamp	14.3 lumens/watt
100-watt general service lamp	17.4 lumens/watt
Fluorescent Lamp	
2 - 24 inch cool white lamps	50 lumens/watt
2 - 48 inch cool white lamps	67 lumens/watt
HID Lamps*	
400-watt phosphur coated mercury lamp	46 lumens/watt
400-watt metal halide lamp	74 lumens/watt
400-watt high pressure sodium lamp	100 lumens/watt

* for outside use.

contribute to the heating load. A rough estimate is that for each kwh of lighting used an extra one-half kwh of air conditioning will be required.

KITCHEN

Because of the way in which the kitchen function has been defined, it encompasses the use of more types of resources (electricity, gas, and water) and the generation of more residuals (gaseous, liquid and solid) than any other function. On the other hand, except for the reduction in solid residuals and the elimination of the gas pilot from stoves, most conservation measures will produce only very marginal improvements.

Water, Liquid Residuals (and Some Energy)

Water use in kitchen sinks is largely determined by the amount of water needed for rinsing fresh foods, cooking, or for washing dishes and utensils manually. Aerator-type nozzles might reduce water use if the faucet is turned on to a moderate degree; however, if these devices encourage maximum strength use, it is not clear that they save water. Double sinks may reduce water consumption. Timed faucets, or faucets which operate only by hand pressure, are water-saving devices which are not found very frequently in kitchens; their use for rinsing fresh foods seems to be quite impractical.

The volume of water used by garbage grinders can be reduced if the unit is used only when filled with food residuals. The weight of pollutants disposed of into the sewer is not affected by this practice, of course. The energy used by the grinder is relatively unimportant.

Dishwashing is an important source of water and energy use and wastewater generation. The main difference between hand washing dishes and using an automatic dishwasher is in the use of electricity, if the machine is utilized only when full. Otherwise, the two methods of dishwashing are comparable (see Section 5). The washer consumes electrical energy in heating the water from the central hot water system to the required temperature (about 155°F in models with "sani-feature"), in drying the dishes with hot air, and in operating the pump. Perhaps a 30 percent reduction in electricity use can be achieved by cool drying. Also a reduction of the water temperature in the washing cycle could save energy if washing is judged to be effective and sanitary at lower temperature.* Water can be conserved by collecting the water used in the final rinsing, and by applying it for lawn irrigation. However, the relatively small amount of water saved (say about one-half of the total water used in the dishwasher) would not offset the replumbing cost.

Energy

Important users of electricity are the refrigerator and freezer; together they represent far more than half of the electrical energy used in the kitchen. Two methods are available to reduce the energy requirements in existing units: (1) pipe waste heat from the compressor to the outside of the box; and

---

* Commercial dishwashers, for example in restaurants, operate at a temperature of 180°F.

(2) install an on-off switch for the anti-condensation heater in those units which have them. Each will reduce the use of electricity by about 10 percent. In selecting a new unit it is obvious that all other things being equal, the more insulation a unit has, the more efficient it will be. Project Independence claims that an increase of insulation from one and a half inches to two inches increased efficiency by 20 percent (14).

Significant improvements in efficiency are also obtained by keeping condenser coils clean and the door gaskets in good repair, by reducing the number of times the door is opened, particularly in a household with children, by keeping the unit fully stocked,* and by purchasing a unit no larger than necessary for the household.

In the cooking activity, the stove and oven are the important users of energy. The biggest difference between gas and electric ranges is the fuel wasted by the pilot light on the gas stove. The American Gas Association estimates that the pilot light uses one-third of the gas consumption of the ranges (8); Consumer Report (15) estimates between 20-50 percent. It is possible to replace the gas pilot light with an electric ignition device. Efforts are being made to ban the sale of appliances equipped with gas pilot lights. The state of California, for example, has already instituted such a ban (61).

In the case of ovens, insulation is again important. Self-cleaning ovens are required (for reasons of safety) to have more insulation that standard ovens. Although the self-cleaning models use less energy for baking and roasting they use more for cleaning. Nonetheless, since conduction losses generally account for about 60 percent of oven heat loss, energy savings can be obtained with self-cleaning models by disconnecting the self-cleaning feature. Again, elimination of the gas pilot can save energy. A gas range with an electric ignition burner and oven can cost $40 to $50 more than a comparable model without this feature (62). Another item which may reduce energy use is a small glass panel on the oven door which prevents unnecessary heat loss by allowing the user to observe the cooking process without opening the door. However, heat loss through the window may be greater than through a solid door, partially offsetting any savings.

Many appliances in the kitchen give off waste heat: oven, dishwasher, refrigerator, stove. During the summer it may be advantageous to lower waste heat loads in the kitchen by proper ventilation. In the fall and the winter the waste heat from the kitchen automatically reduces the space heating load.

Solid Residuals

The kitchen and the other functions produce solid residuals in the form of paper, glass, metal, food wastes, and other miscellaneous items. Garbage

---

* A unit that is filled with food requires less electricity to operate than one which is empty.

grinders convert about 75 percent of the organic component to liquid residuals. Refuse compactors reduce the volume needed for storage, but the total weight is not reduced. The fact that a refuse compactor is more effective in reducing the volume of certain materials, such as metal containers and other bulky materials, might have an influence on the weight and composition of the household's solid residuals.

Mechanical devices and physical changes in refuse storage areas are not likely to significantly reduce the generation of solid wastes. Solid residuals comprise the one category where measures exogenous to the household (e.g., the packaging practices of vendors, the passage of such legislation as the "bottle bill," the provision of separate collection, and the relative prices of virgin and recycled factors of production) and attitudes and behavior of members of the household (e.g., preference for prepared food and willingness to participate in recycling programs) are more important than physical measures designed to control residuals generation. As a result it is difficult to estimate what kinds of reductions in waste generation might be anticipated. Nonetheless, below we will show how the factors listed in Table 6 of Section 4 can contribute to a reduction in solid residuals generation.

Inconvenience plays the most important role for a household involved in any program of solid residuals recovery. Finding the space to store the residuals and the time to separate and recycle them is inconvenient; out of pocket costs are minor. Table 40 summarizes monthly space, time, and cost requirements of a household to recover glass, tin/bi-metals, aluminum, and newspaper. The estimates of time (which seem to be very much at the low range) and costs are derived from a study of source separation and recycling programs across the country (63). Some general trends could be observed: the more frequent the collection, the higher the participation rate; participation rates in programs increase with duration of the programs. For example, a program in Fort Worth, Texas indicated a participation rate of 25 percent for a newspaper collection frequency of twice per month, but a rate of 40 percent for once a week collection. After inception, the program revealed an annual increase in the participation rate of 18 percent. Collection on the day of regular solid waste collection is also basic for a stable participation rate. A mandatory source separation ordinance will contribute to an increase in the participation rate.

In the following tables of potential measures to reduce the solid residuals generation rate (Tables 41 through 43), every measure was given a rating of "inconvenience" to the household, as perceived by Meta Systems' participants in recycling operations and as interpreted by the review of related literature (63, 64, 65, 66). The rating depends essentially on the amount of resource input, especially time required by the various measures. However, because time estimates can vary so widely and because other considerations (e.g., existence of collection centers and frequency of collection) are also important we did not use amount of time as the rating which appears in the tables. Rather we gave each conservation measure a <u>letter</u> rating; an A reflects no inconvenience and a D indicates considerable inconvenience.

We felt four ratings were sufficient in an area which is so difficult to evaluate in "average" terms; more ratings would only confuse the issue by

TABLE 40. MONTHLY SPACE, TIME, AND COST REQUIREMENT FOR A HOUSEHOLD FOR RECOVERING SOLID RESIDUALS*

	Residuals† (lbs/month)	Storage‡ Requirement (sq ft/month)	Time (min/month) for Preparation					Range of Costs*** ($/month)
			Clean**	Remove Contaminants	Reduce Volume	Bundle	Transport (in house)	
Glass	18.0	2.2	9.6	2.4	0	N.A.	6.4	0-0.005
Tin/Bi-Metal	6.8	1.6 - 2.8	9.2	4.4	8.8	N.A.	5.6	0-0.005
Aluminum	1.2	1.8 - 1.9	2.8	0.4	0.8	N.A.	1.2	0-0.002
Newspaper	48.8	3.3	N.A.	0.4	N.A.	9.2	2.4	0-0.011

* Based on: SCS-Engineers (63)

† Assumed 3.4 persons/household on the average.

‡ Monthly accumulation of materials in storage containers of a makeshift nature (e.g., cardboard boxes or grocery bags); lower value of ranges indicates that volume of materials has been reduced; newspapers are stacked.

** Includes time for material sorting.

*** Incremental (1973) costs to households for resources used (while separating and preparing materials); including water used for cleaning, energy used if metal container volume reduction is accomplished with can opener, and twine used when bundling newspaper; lower range indicates zero preparation costs; costs in parentheses give costs of container. No value is given to home labor or inconvenience.

TABLE 41. MEASURES INFLUENCING SOLID RESIDUALS GENERATION

Administrative/Institutional	% Reduction (of component weight)	Level of Inconvenience to Household
Garbage Grinder Organics	65-75	A
Separate Central Collection:*		B-C
Paper	35 (15)	
Glass	} 60 (25)	
Metals		
Bottle Bill:		B
Metal	15-20	
Glass	25-35	
Restricting Advertising:		A
Mail		
Paper	} 5-10	

* These estimates are based on unpublished data of EPA regarding their source separation and collection programs in Marblehead, Massachusetts, a relatively wealthy suburb, and Somerville, Massachusetts (numbers in parentheses), a blue-collar city near Boston with a higher percentage of rental units. In Somerville, just clear glass instead of all glasses was separated.

TABLE 42. MEASURES INFLUENCING SOLID RESIDUALS GENERATION

Physical/Technological	% Reduction (of component weight)	Level of Inconvenience to Household
Storage space (in MduH)*		
Paper	15-25	B (C)†
Glass	25-35	
Metals		
Separate Chutes (in MduH)‡		
Glass & Metals	70-80	A
Paper Bundled	30-40	B (C)**

* These values have been developed from the data on Somerville, Mass., because the city has a high percentage of multi-family units: central collection is assumed.

† If a storage facility is provided for every floor, the inconvenience (B) of recycle is much smaller than the inconvenience (C) associated with carrying the material into the basement.

‡ Based on speculation of a dual chute system: glass and metals, and others (except newspapers), respectively.

** See † above.

TABLE 43. MEASURES INFLUENCING SOLID RESIDUALS GENERATION

Behavioral	% Reduction (of component weight)	Level of In-Convenience to Household
Use of garbage grinder organics	65-75	A
Participating in voluntary recycling operation*		C-D
Paper	10-20	
Glass	10-40	
Metals	15-50	
Others	0-6	
Compost heap use		B-C
Organics (except meat)	30-60	
Garden waste	70-85	
Use of advertising mail as scratch paper	2-3	B
Reuse of packaging material paper	1-3	B
Conscious efforts of purchasing products generating fewer residuals	3-5	C-D

* Upper estimates are based on the best year of the recycling operation in Wellesley, Mass., one of the most successful voluntary operations in the United States; it is assumed that a recycling center is conveniently located in the neighborhood.

arguments about scaling. Rating A implies essentially that changes of the household's daily routines are not required. Rating D is given to those tasks which require the largest inputs of household resources (e.g., separating materials and taking them to a recycling station). Ratings B and C cover largely the efforts at home, such as separating, storing and bundling materials to be picked up at curbside as part of a regular collection service. We feel that the inconvenience increases with the number of materials separated, the time required to separate them, and the space needed to store them. If only newspapers are separated, the time and space requirement is relatively minor. If, however, newspapers, metals and glass are separated, the space requirements increase and if the materials must be taken to a collection point, time increases also. Thus, we feel that a rating of B is appropriate for separation of one fraction, such as newspapers; should the tasks of separating other materials be added, the inconvenience might increase to C, especially in small single family and multi-family units. The storage space required becomes significant.

The rating of the impact of the "bottle bill" is difficult. Many people perceive it as very inconvenient at the moment of its inception; but only storing the containers is really inconvenient because return can be combined with purchase of new containers. Therefore, we have used a rating of B.

Use of compost heaps must receive a range of ratings. Given small lot sizes and the intention of efficient use (i.e., large reductions in volume of material) of compost heaps which requires the proper mix of materials, control of the level of humidity and insurance of aerobic conditions, would imply a rating of C. If the compost heap is largely a dumping place for grass clippings and leaves on a large lot (see Outdoors), there might be little inconvenience. The rating might be B or even A.

In general, it is difficult to compare the inconvenience levels as they are perceived by citizens. But, we feel that our attempt of an average rating and its discussion should provide some guidance.

WASHING AND CLEANING

The two major users of resources under this function are the washing machine (water) and the dryer (electricity or gas). The washing machine also contributes to the liquid waste load.

In washing, water can be conserved by the use of water level settings appropriate for the size load being washed. If the machine does not have level control the user should wait for a full load to accumulate. One device, known as a "suds-saver," reuses wash water by discharging it to a sink where it is stored for use in the next washing cycle.

Because the washer's direct electric energy use is so small, the principal energy conservation measure is the reduction in hot water use. This can be achieved both through a reduction in overall water use and through the use of warm or cold rather than hot water for washing and of cold water for

rinsing.* Control over residuals loads is limited to the use of a "suds-saver" and to the selection and use of detergents.

For dryers, decreasing energy use depends to a large extent on behavior. Conservation measures include waiting for full loads to accumulate, cleaning the lint filters regularly, drying similar type fabrics together, running multiple loads in succession to avoid having to reheat the dryer before each load, avoiding "overdrying" of fabrics, and keeping the dryer in a heated room. It may also be possible to increase the inherent efficiency of the units by providing additional insulation and tighter seals.†

It has been suggested that waste heat from dryers be employed to heat rooms by allowing for indoor venting during the heating season. Because of the high moisture content of this gas, and the presence of fine lint particles, special air filters would be required and excessive humidity could be a problem.

BATHROOM

Water use can be reduced significantly, but little opportunity exists to reduce or eliminate wastewater residuals associated with bathroom activities; the options are more related to media trade-off (e.g., waterless vs. water-using toilet) and alternate methods of treatment and disposal (e.g., septic tank or composting toilets vs. centralized treatment).

Toilets

Major savings in water can be achieved in this area. Many devices exist which reduce the volume of water used in conventional toilets by as much as 90 percent. The shallow trap toilet, which is similar in appearance and cost to the conventional toilet, is designed to use approximately one-third less water than the conventional toilet. Dual flush toilet devices can convert conventional toilets to a two-cycle operation. One flush is for liquids and the other for solids. Two such devices are the econo-flush and the sink-bob toilets. The Saveit water saver device requires modification of the conventional toilet; the result is a reduced flush for both cycles. Data have indicated this reduced flush may not be sufficient to adequately remove solids (24). All devices, except the Saveit which needs modification for the solids to flush, appear satisfactory to U.S. consumers (24). A water use and cost summary for such devices and others is shown in Table 44.

---

* Some cycles, such as the permanent press cycles, have a larger water use in the pre-rinse cycle in order to keep the clothes wet at all times. Thus the proper selection of washing cycles affects not only cleaning efficiencies, but water use as well.

† The fact that electric units are more efficient than gas seems to indicate that manufacturers do respond to energy prices and that there is room for improving the operating efficiency of dryers.

TABLE 44. WATER CONSERVATION DEVICES FOR BATHROOM (TOILET)*

Device	Cost ($)	Water Used
Toilets		
Conventional toilet close-coupled	60†(1974)	5-7 gal
Conventional toilet one piece	180-480†	6-8 gal
Conventional toilet one piece w/flush meter valve		4 1/4 gal
Conventional urinal w/water storage tank (residential)	40-125†(plus 75 for tank)	1-4 gal 1-4 gal
Shallow trap toilet	70	3-3.5 gal
Tank flushing valve	few dollars	
Variable flush attachment	5[m]	
Dual flush	16†	2-4 gal for partial flush
Pressurized flush toilet	300† 60 for air compressor	2 quarts/flush
Pressurized tank toilet	40 for tank	2-2 1/2 gal
Controlled volume flush toilet	not given	1-3 pints/flush
Wastewater recycling toilet	single: 1400-1650[m] double: 2400-2800[m]	
Oil flush toilet	2500 not installed[m] without incinerator	

(Footnotes on next page)

TABLE 44 (CONTINUED)

Device	Cost ($)	Water Used
Incinerator toilet	395[m] (1972) 75 installation	8 ounces for weekly cleaning
Vacuum toilet		1.3 quarts/flush; 6% of water used in conventional toilets
Composter toilet	950[†] not installed, including toilet stool and garbage chute	0
Packaging toilet		0
Freeze toilet	320[†] (estimate for delivered unit in New York area)	0
Chemical toilet	60 and up for fresh water flush[†] 250 for water recirculating[†]	4 gal/60-80 uses
Leak signalling ballcock	6-10[†]	

* Milne, M. (41)

† study cost estimate (41)

m manufacturers cost estimate (41)

The Clivis Multrum, a waterless toilet which also accepts kitchen garbage and produces a dry, black, odorless humus reduced to 5 percent of the input volume, was first introduced in Sweden, in approximately 1954. The device has not yet been well-received in the U.S. In some installations odors may be a problem and supplemental heat is sometimes necessary to maintain the temperature at 90°F (32°C) which increases energy use and cost. The complete system including recommended external equipment costs $2,000-$3,000 (1974 dollars) (29).

The Lilyendahl system uses air rather than water to transport wastewater, requiring only 0.5 gallons per toilet flush. The system's principal components are a waste receiving tank and a vacuum pump. Current use in Sweden and the Caribbean Islands is limited to commercial establishments. As an individual wastewater treatment system it costs $1,520 (1974 dollars); however, a system installed in a development of 100 houses or more is estimated to cost $295 per household (29).

Wastewater residuals from toilets cannot be reduced but transport-treatment options are available. Collection systems can be relieved in stress areas by utilizing water saving toilets; however, consideration must be given to the potential impact on conventionally designed sewers and wastewater treatment plants, since the solids content of the resulting wastewater would be substantially increased.

Bathing

Flow limiting heads for showers can reduce rate to 2.5 gpm and 3.5 gpm; however, survey results (29) indicate some user dissatisfaction with the lower rate, 2.5 gpm. These devices cost less than $15 installed (1974).

Water savings in bathing can also be achieved by the thermostatic mixing valve. It maintains a constant temperature level by controlling the hot and cold water mix. The bather can reduce the shower flow rate while soaping without need of temperature regulation. The device costs $100 installed (1974 price). An extensive list of devices, range of water used, and costs is found in Table 45.

Reuse of the bathing water and other gray water for toilets can reduce water use by up to 40 percent. Total installed costs of a reuse unit (1974 dollars) is $325.00 (29). Reuse of bathing and lavatory wastewater for bathing requires on-site conversion of the residuals media (i.e., liquid to solid); the result is a decreased hydraulic and wastewater residual loading but may increase solid waste residuals (e.g., a filtering unit or cartridge used to remove residuals needs to be disposed, but a diatomite type filtration unit will increase the solids loading to the sewer system during backwashing).

Lavatory

Lavatory water use can be reduced by separate hot and cold water faucets, which may encourage using the basin to catch and mix water to the desired temperature, in contrast to a single mix-type faucet which encourages continual water flow. Another device is the spring or timed faucet that automatically shuts off the flow at short intervals. Faucet aerators may decrease

TABLE 45. WATER CONSERVATION DEVICES FOR BATHROOM* (SHOWER, BATH, SINK)

Device	Cost ($)	Water Used
Bathing and Personal Hygiene		
Conventional faucet		
Flow controls - sink, shower	0.75-20†	3 gal/min
Aerators and spray tapes	aerators: 1-5† when purchased separately	aerators: 0.75 gal/min spray taps: 1-2 gal/min
Self-closing mixing valves	comparable to conventional equipment cost	
Thermostatically controlled mixing valve	60† installation cost same as for conven. valve	
Pressure balancing mixing valve	45† installation cost same as for conven. toilet	
Air-assisted shower head	275 installed m	1/2 gal/min
Bidets	70†	hold 1-2 gal
Sinks and Bathtubs		
Functionally designed sinks and bathtubs (water saving)	limited demand means initial price somewhat higher than conventional models	sinks: less than 1 gal tubs: less than 50 gal

* Milne, M. (41)

† study cost estimate (41)

m manufacturers cost estimate (41)

the water use at the lavatory; estimated reductions are one to two gallons per household per day (24). Contrary to this is the belief that the aerator reduces splashing and water use could actually be increased. This device is not as costly at $2.

OUTDOORS

The only resource used in significant quantities outdoors is water. The most important residuals are solid waste and stormwater runoff. To a large extent the one activity which accounts for water used, the solid residuals generated, and the quantity of runoff is landscaping. Consequently changing landscaping and gardening practices can lead to substantial reductions in water consumption and residuals generation.

Water

Although outdoor use can amount to over half of the water utilized by a residence, little attention has been given to conservation measures. Approximately 90 percent of the outdoor water use goes to lawn and garden and some of it is wasted in overwatering. A recent California study estimated that overwatering accounted for slightly less than 20 percent of the outdoor residential water use in the state in 1972 (38). There are some devices which can reduce overwatering if properly employed. Trigger type nozzles, soil moisture indicators, timed sprinkler systems, and drip irrigation systems can reduce water use. These and other devices are listed along with ranges of costs in Table 46 . We have made no estimate of water savings, but the study mentioned above concludes that a well-controlled, timed sprinkler system would reduce overwatering by 50 percent (38).

Another approach to reducing irrigation requirements is the utilization of native vegetation and low water using plants to landscape a residence. In some regions of the country such a practice could reduce outdoor water use by more than 50 percent.

Solid Residuals

Most solid residuals from landscaping and gardening can be composted and reapplied to the soil as a fertilizer or conditioner. Composting grass clippings, leaves, and other organic yard wastes can reduce the weight of solid waste residuals by as much as 30 percent at least during the summer and the fall. This requires, however, a composting operation closely controlled by the household. Composition of materials, level of humidity, and method of covering the heap are determinants of the quality of the operation (see above). If composting bins are used, depending on the size and design they can cost between $10 and several hundred dollars. Also ready-made units are available. They range in price from $75 to several hundred dollars.

Stormwater Runoff

Runoff from residential lots can be decreased by eliminating impervious surfaces, by landscaping with vegetation which increases interception and infiltration of precipitation and retards overland flow, and by directing runoff from roof to dry wells rather than sewers and gutters. Quantitative relationships have not been developed on a small scale but on the basis of aggregated data Lager and Smith have estimated that the residuals in the runoff can be reduced by as much as 25 percent (67).

TABLE 46. LAWN AND GARDEN IRRIGATION DEVICES WHICH MAY CONSERVE WATER

Device	Cost ($)
Hose Attachments	1 - 40
Instantaneous Moisture Indicator	1 - 25
Tensiometers	150
Lawn Sprinkler Timer	70 and up
Drip Irrigation System	7 - several hundred
- hose attachment	7 - 20
- installed system	300 - 800 (depending on area of lawn and quality of system)

MAINTENANCE

Automotive maintenance is the only activity considered to be a significant resource user or residuals generator under the maintenance function. Unfortunately data which would provide the basis for estimating the magnitude of water use and wastewater generation have not been collected. The amount of water used in washing a car can be reduced with a trigger type nozzle or the use of a bucket. Any runoff associated with washing would be reduced also.

Discarded lubricating oil presents a problem similar to that faced with recoverable solid residuals--the broad distribution of very small quantities of a material which can be economically reclaimed only once it has been collected. The collection depends on individual willingness to transport the oil to some central location where sufficiently large quantities can be stored and reclaimed.*

SUMMARY

In this section we have presented a wide range of conservation measures and suggestions for practices which may reduce resource use and residuals generation. In most cases we have provided the range of savings to be expected with the various measures, devices and practices. Where possible we have given cost estimates. Although we have focused our attention on the major resource using functions and activities we have tried to include some examples of simple and inexpensive devices which, when used properly, can lead to noticeable savings. In the next section we will show how the material presented above can be employed to estimate reductions in resource use and residuals generation in the context of completely specified baseline cases.

---

* For a further discussion of the issues associated with collection and reclamation of used oil, see Irwin, W. A. (68).

SECTION 7

RESOURCE AND RESIDUALS BASELINES AND THE IMPACT OF CONSERVATION MEASURES

INTRODUCTION

We intend to develop two hypothetical baselines -- one "high" and one "low" -- of resource use and residuals generation. Our purpose is to provide, in a more concrete context, some perspective on the use and generation figures presented in Section 5 and the conservation measures in Section 6. Also, we wish to illustrate a method for determining the relative merits of conservation measures and their attractiveness to homeowners.

The baselines are constructed for single family residences and the differences between the high baseline and the low baseline are more a matter of physical differences in the structures (e.g., amounts of insulation, efficiency of the heating system, and the presence of resource using devices) than behavioral differences of the occupants. Two baselines are selected to illustrate the range of options available and the consequences of implementing conservation measures depending on assumed use levels.

BASELINES

The baselines are constructed for a single family detached house on a one-quarter acre lot. In each case the house is occupied by four persons (two adults and two children) and is assumed to be located in southern New England. Some of the characteristics shared by both baseline houses are listed in Table 47.

Energy use and gaseous residuals generation for each residence are presented first, followed by the water use and liquid residuals estimates and the solid waste baseline figures. Table 48 contains the specific characteristics necessary for the obtaining energy baselines. As can be seen from the table the primary differences are found in levels of insulation, thermostat settings and energy using devices. The characteristics which are important for determining the water use and liquid residuals baselines appear in Table 49 and the characteristics and assumptions needed to calculate the solid residuals baselines are contained in Table 50 .

The calculations which must be made to develop the baseline estimates are straightforward, but tedious, and are not presented in this section. However, in order to provide the information necessary to reproduce the estimates, an example of the procedure we have used is given in Appendix E.

TABLE 47. SOME CHARACTERISTICS OF BASELINE "SINGLE FAMILY HOUSE"

Structure Type: One-story detached; no basement; 1,500 sq ft of living space

Lot Size: 1/4 acre

Location: Southern New England (according to Table B-2: 5,000 degree days/year; average outdoor heating season temperature: 45°F; 400 cooling hrs/yr; average outdoor cooling season temperature: 85°F)

Size of Household: 4 persons (2 adults and 2 teenage children)

Energy and Gaseous Residuals Baselines

For the energy baselines the estimates of use (on an annual basis) by function, for both the high and low baseline, appear in Table 51 . In both cases the most important function is space heating and the second most important is water heating. Together they account for over 80 percent of the energy used. All other functions, with the exception of cooling in the high baseline, use very small quantities of energy. There is not one which contributes more than four percent to the total.

The transformation of the requirements for energy into gaseous residuals is performed using the ratios in Table A-5. Only those functions which actually convert fuel to heat in the residence (i.e., space heating, water heating, and kitchen range) generate gaseous residuals. The results are found in Table 52 . Naturally the primary contributor is space heating.

Water Use and Liquid Residuals Baselines

In the water use baselines, the most important water using activities--toilet and bathing--occur within the bathroom function (Table 53). In the low baseline the toilet accounts for 33 percent of indoor use and bathing 22 percent. In the high case the shares of indoor use are 38 percent and 19 percent respectively. Some outdoor water use is included in the high baselines--lawn watering and car washing. Lawn watering accounts for almost all of the outdoor use (89%) and 20 percent of the total (indoor plus outdoor) water use.

In the liquid residuals baselines it is assumed that none of the water used indoors is consumed, i.e., all becomes part of the liquid residuals load. In the case of outdoor use we assume that the irrigation water does not run off, but that the car wash water does and that it enters the sewer system. Estimates of organics and nutrients which become part of the liquid residuals stream appear in Table 54. The only real differences between the two

TABLE 48. CHARACTERISTICS OF BASELINES FOR ENERGY USE

Low Energy Use House	High Energy Use House
Heating Built to FHA '73 specifications; gas forced-air heating; 75 percent efficiency; thermostat setting 68°F (reduced to 62°F for 6 hours overnight); all rooms heated.	**Heating** Built to FHA '65 specifications; gas forced-air heating; 65 percent efficiency; thermostat setting of 72°F (no reduction overnight); all rooms are heated all the time.
Cooling No central cooling system.	**Cooling** Central cooling system; thermostat setting of 75°F (efficiency of 65 percent).
Water Heating Central supply and storage system; gas furnace with pilot light; 50 gallon tank; inlet temperature 60°F; outlet temperature 120°F; ambient air temperature 68°F.	**Water Heating** Central supply and storage system; gas furnace with pilot light; 50 gallon storage tank; inlet temperature 60°F; outlet temperature of 140°F; and ambient air temperature 70°F.
Kitchen Gas range (stove/oven) with pilot light; refrigerator (manual defrost).	**Kitchen** Appliances include a self-cleaning gas range (stove/oven) with pilot light; refrigerator (frost-free), separate freezer (frost-free feature); dishwasher; and other appliances.
Washing/Cleaning Washing machine and dryer (each used once a day).	**Washing/Cleaning** Washing machine, electric dryer, and miscellaneous small appliances are available; washing machine and dryer are each run once a day on the average.
Bathroom Miscellaneous small energy uses.	**Bathroom** Miscellaneous small energy uses.
Living/Entertainment Black and white T.V.; radio.	**Living/Entertainment** Color T.V. (with instant-on feature) and radio/stereo equipment.

TABLE 49. CHARACTERISTICS OF BASELINES FOR WATER USE AND WASTEWATER AND LIQUID RESIDUALS GENERATION

Low Water Use House	High Water Use House
Indoors:	
Kitchen: -sink	Kitchen: -sink -garbage grinder (2 uses/day) -dishwasher (2 loads/day)
Bathroom: -bath tub -conventional toilet (4 gallon tank) -sink	Bathroom: -two bathrooms, first with tub & shower, second with shower only Each with conventional toilet (6 gallon tank) and sink
Other: -washing machine (once every other day)	Other: -washing machine (once a day)
Outdoors	
-no lawn watering -car washed in car wash	-18,500 sq ft of lawn watered -car washed once every month

TABLE 50. FACTORS LEADING TO LOW AND HIGH BASELINE SOLID RESIDUALS GENERATION

	I	II	III
Low			
	• grinder ordinance • separate collection of cardboard, paper, glass and metals at days of regular collection	• absence of garbage grinder • gardening efforts • no compost heap • citywide recycling center	• family eats regularly at home; attempts to keep use of precooked meals at a minimum • non-returnable beer and soft drink cans • regular local morning newspaper (not very big); Sunday newspaper • separation of newspaper and glass and metal at a frequent level (2 per month) • some "junk mail" is used for "scratch" paper; all other paper fractions are discarded.
High			
	• grinder ordinance • factor price (paper good but variable, aluminum 17¢/lb) • separate collection of newspaper (1/month) (a little unreliable; no good advertisement)	• no compost heap • recycling center available (but only on voluntary participation except for newspaper)	• family eats regularly at home; typical food being a mixture of fresh and precooked meals • all organics are ground by garbage grinder • non-returnable beer and soft drink cans • regular local morning newspaper (not very big): Sunday newspaper • Occasional separation of newspaper (1/3 month). If they are not picked up they get thrown away with regular collection.

I = administrative and institutional factors

II = physical and technological factors

III = behavioral and personal factors

TABLE 51. ENERGY BASELINES

	Low Use		High Use	
	Millions Btu/yr	Portion of Total	Millions Btu/yr	Portion of Total
Space Heating	118.3	0.75	266.4	0.73
Cooling	-	-	28.6	0.08
Water Heating	24.5	0.16	35.8	0.10
Lighting	1.7	0.01	6.0	0.02
Kitchen	7.0	0.04	16.9	0.04
-Range (plus pilot)	[4.0]		[4.8]	
-Dishwasher	[-]		[1.2]	
-Refrigerator	[2.5]		[4.4]	
-Freezer	[-]		[5.0]	
-Miscellaneous	[1.5]		[1.5]	
Washing/Cleaning	5.6	0.03	8.3	0.02
-Washing machine	[0.3]		[0.5]	
-Dryer	[5.0]		[7.5]	
-Miscellaneous	[0.3]		[0.3]	
Bathroom				
-Miscellaneous	0.1	-	0.1	-
Living/Entertainment	0.9	0.01	2.6	0.01
-Television	[0.3]		[1.8]	
-Radio/Stereo	[0.3]		[0.5]	
-Miscellaneous (hobbies)	[0.3]		[0.3]	
Total	158.1	1.00	364.7	1.00

TABLE 52. GASEOUS RESIDUALS (LBS/YR)

	Low Baseline					
	Particulates	SO_2	SO_3	CO	Hydrocarbons	NO_2
Heating	1.1	0.1	-	2.3	0.9	9.1
Water Heating	0.2	-	-	0.5	0.2	1.9
Kitchen Range	-	-	-	0.1	-	0.3
Total	1.3	0.1	-	2.9	1.1	11.3

	High Baseline					
	Particulates	SO_2	SO_3	CO	Hydrocarbons	NO_2
Heating	2.6	0.2	-	5.2	2.1	20.6
Water Heating	0.3	-	-	0.7	0.3	2.7
Kitchen Range	-	-	-	0.1	-	0.4
Total	2.9	0.2	-	6.0	2.4	23.7

TABLE 53. WATER USE BASELINES (GAL/YR)

	Low Use			High Use		
	Gallons/ yr	Portion of Sub-Total	Portion of Total	Gallons/ yr	Portion of Sub-Total	Portion of Total
Indoor:						
Kitchen						
- sink	8,760	.13	.13	8,760	.08	.06
- garbage grinder	-			4,380	.04	.03
- dishwashing	5,840	.09	.09	11,680	.10	.08
Bathroom						
- toilet	21,900	.33	.33	43,800	.38	.30
- bathing	14,600	.22	.22	21,900	.19	.15
- sink	4,380	.07	.07	4,380	.04	.03
Cleaning						
- washing machine	8,210	.13	.13	16,425	.14	.11
- miscellaneous	1,825	.03	.03	3,650	.03	.02
Subtotal	65,515	1.00	1.00	114,975	1.00	-
Outdoor:						
Lawn watering	-	-	-	29,200	.89	.20
Maintenance						
- car washing	-	-	-	3,650	.11	.02
Subtotal	-	-	-	32,850	1.00	-
TOTAL	65,515	-	1.00	147,825	-	1.00

TABLE 54. LIQUID RESIDUALS BASELINE (LBS/YR)

	Low Use			
	BOD_5	SS	TN	TP
Kitchen				
- sink	29.2	7.7	1.5	1.5
- dishwashing	21.9	8.8	1.5	1.5
Bathroom				
- toilet	43.8	65.7	29.2	4.4
- bathing	14.6	8.8	1.5	-
- sink	14.6	13.1	-	-
Cleaning				
- washing machine	18.6	3.7	.8	.2
TOTAL	142.7	107.8	34.5	7.6

	High Use				
	BOD_5	SS	TN	TP	Grease and Oil
Kitchen					
- sink	29.2	7.7	1.5	1.5	-
- garbage grinder	116.8	131.4	1.5	1.5	-
- dishwasher	21.9	8.8	1.5	3.0	-
Bathroom					
- toilet	43.8	65.7	29.2	4.4	-
- bathing	14.6	8.8	1.5	-	-
- sink	14.6	13.1	-	-	-
Cleaning					
- washing machine	37.2	7.5	1.5	.4	-
Maintenance					
- car washing	.1	.8	-	-	.2
TOTAL	278.2	243.8	36.7	7.8	.2

baselines result from the presence of a garbage grinder, the more frequent use of a washing machine and the car washing in the high case. In the low baseline the most important source of residuals is the bathroom function. However, in the high base the garbage grinder contributes far more to the residuals load than any other source.

Solid Residuals Baselines

The annual generation figures by component appear in Table 55. From the total in the table, it can be seen that there is little difference between the high and low baselines. The primary reason for this is the presence of a garbage grinder in the high baseline residence which reduces the food component of solid residuals by more than an order of magnitude. For all other components the high baseline has substantial greater amounts of residuals than does the low baseline.

CONSERVATION MEASURES APPLIED TO THE BASELINES

The application of the conservation measures to the baseline cases is done in a manner so as to illustrate their range of impacts and costs rather than to identify only the most cost-effective measures. The energy baseline is considered first, followed by the gaseous residuals, water, liquid residuals, and solid residuals baselines. Each resource or residual is taken separately through the relevant household functions and impacts and cost estimates are calculated.

Energy

Heating and Cooling--

The first measures considered are conventional means of reducing heat loss and fuel requirements. The impact of six modifications to the shell of structure are investigated alone and in conjunction with improving the burner efficiency by proper maintenance and lowering the temperature setting on the thermostat. The modifications, labelled A through F, are outlined in Table 56. They proceed from very modest additions of insulation to substantial increases in the thickness of insulation and the inclusion of storm windows.

We assume that proper maintenance of the burner costs $25/year and allows the heating system to operate at an 80 percent efficiency. In assessing the effect of lowering the thermostat we assume that indoor temperature is kept at 64°F.

The heat loss calculation method described in Section 5 and the incremental heat loss reduction and costs presented in Section 6 are used to compute the annual energy savings in Btu's per year and their associated total costs

TABLE 55. SOLID RESIDUALS BASELINES

Component	Low Baseline Amount (kg/yr)	Low Baseline Portion of Total	High Baseline Amount (kg/yr)	High Baseline Portion of Total
Food	540	.31	29	.02
Paper	394	.22	511	.28
Glass	204	.12	423	.24
Metals	102	.06	204	.11
Miscellaneous*	175	.10	292	.16
Garden	336	.19	336	.19
Total	1,751	1.00	1,795	1.00

* Includes plastics, rubber, leather, textiles, building materials, etc.

TABLE 56. STRUCTURAL IMPROVEMENTS TO REDUCE HEAT LOSS

Modification	
A	increase by 1" insulation in roof
B	increase by 1" insulation in walls
C	add storm windows throughout
D	increase to 6" insulation in roof
E	increase to 6" insulation in roof and add storm windows
F	up to 24" insulation in roof, 5 5/8" in walls, storm windows and insulation around floor (foundation)

and annual costs.* The annual costs are then divided by the annual energy savings to provide an indicator of the relative effectiveness of the conservation measures. The results of these calculation appear in Tables 57 and 58.

For the low baseline, the addition of one inch of insulation in the ceiling or walls leads to a fuel savings of slightly more than 6 percent. The installation of storm windows results in a savings of almost 20 percent. Increasing insulation to 24 inches in the ceiling and 5 5/8 inches in the walls, adding insulation to the foundation, and installing storm windows can in the low baseline bring about a 55 percent reduction in fuel requirements. Looking at the ratios of annual costs to annual fuel savings it can be seen that they increase rather dramatically going from modification A to modification F. Nonetheless, given the current cost of natural gas to the consumer--an average cost between $\$3/10^6$ Btu and $\$4/10^6$ Btu--only modification F would appear to be unreasonable. In noting this, we recognize that fuel prices are likely to increase dramatically and also that using an average cost for gas ignores the fact that currently most residential customers face a decreasing block rate. The increase in prices will make the more expensive conservation measures attractive, while decreasing rates will make the marginal improvements (e.g., the last few inches of insulation) less attractive.

In the case of the high baseline the first inch of insulation in the ceiling or in the walls can reduce the fuel requirement by approximately 11 percent. The effect of storm windows is equivalent to the first inch of insulation, but more expensive. Going to the highest level of insulation considered can reduce fuel requirements by almost 60 percent. Using the gas prices given above all the modifications would be attractive to a household.

The effects of a burner maintenance program and a lower thermostat setting depend on what physical improvements have been made. By themselves (i.e., given the baselines), the former lowers the fuel requirement by 6 percent (7.1×10^6 Btu) for the low baseline and by 19 percent (50.6×10^6 Btu) for the high baseline and the latter by 12 percent (14.2×10^6 Btu) in the low case and 30 percent (78.9×10^6 Btu) in the high. When the residences are well insulated (e.g. modification F) the maintenance program and the lower thermostat setting result in much lower savings. In the low baseline given modification F, the maintenance program reduces the fuel requirement by 3 percent (3.4×10^6 Btu) and setting the thermostat at 64°F provides a 5 percent (6.4×10^6 Btu) savings. In the high baseline with the same modification, burner maintenance saves an additional 8 percent (20.3×10^6 Btu) and the lower indoor temperature saves 12 percent (31×10^6 Btu). Including all measures (Modification F, burner maintenance and an indoor temperature of 64°F) as part of an energy conservation program on the high baseline leads to a 77 percent reduction in energy use.

---

* The annual cost (or payment) is computed using the formula which appears in the footnote of Table 57.

TABLE 57. ENERGY SAVINGS
(10^6 BTU/YR)

Modification	Low Baseline Reduction (10^6 Btu/yr)	Low Baseline Percent Reduction*	High Baseline Reduction (10^6 Btu/yr)	High Baseline Percent Reduction**
A	6.5	5.5	29.6	11.1
B	7.5	6.3	29.6	11.1
C	22.6	19.1	32.7	12.3
D	12.9	10.9	57.6	21.6
E	35.5	30.0	90.3	33.9
F	63.4	53.6	160.4	60.2

*Low baseline: 118.3 x 10^6 Btu/yr
**High baseline: 266.4 x 10^6 Btu/yr

First Cost and Annual Cost (assuming 8 3/4 percent interest rate & 25 year payment period)

Modification	Low Baseline Total Cost ($)	Low Baseline Annual Cost*** ($)	High Baseline Total Cost ($)	High Baseline Annual Cost*** ($)
A	69	6.9	70	7.0
B	42	4.2	265	26.5
C	440	44.0	440	44.0
D	243	24.3	400	40.0
E	683	68.3	880	88.0
F	3,548	354.8	3,970	397.0

***Annual cost figures are calculated using the expression

$$C_a = C_f \left[\frac{i}{1-(1+i)^{-n}}\right]$$

where:

C_a = annual cost

C_f = total cost

i = interest rate (.0875 is used)

n = number of repayment periods in years (25 years is used)

TABLE 58 . RELATIVE EFFECTIVENESS OF CONSERVATION MEASURES*

Modification	Low Baseline ($/$10^6$ Btu)	High Baseline ($/$10^6$ Btu)
A	1.06	.24
B	.56	.90
C	1.95	1.35
D	1.88	.69
E	1.92	.97
F	5.60	2.48

* Relative Effectiveness is calculated by dividing the annual costs ($) by the annual energy savings (10^6 Btu) (see Table 57 for respective values).

Cooling load reduction have been computed only for the high baseline because we have not included energy for cooling in the low baseline. The insulation modifications considered above (Table 56) are also used for cooling. The energy savings which can be achieved with these modifications range from 6 to 40 percent (See Table 59). Recall, however, that the total cooling load in the baseline is only 8 percent of the energy requirement for heating. Nonetheless, as much as 11.4 x 10^6 can be saved. Such a savings in cooling in conjunction with a reduction in the space heating requirement can make even the very high level of insulation(Modification F) extremely attractive to the household. If, for this modification, the reduction in cooling load (11.4 x 10^6 Btu/yr) is added to the reduction in heating requirement, (160.4 x 10^6 Btu/yr), the relative effectiveness in dollars per unit of energy saved is improved from \$2.48/10^6 Btu to \$2.31/10^6 Btu.

In Section 6 above, the reductions in heat loss and cooling load due to placement of windows, effect of shade trees and other vegetation, mounding, window awnings, drapes and venetian blinds, and the color of walls and roof have been listed. Although each can contribute to a decrease in energy requirements they also serve other functions. Thus the portion of their costs attributable to conservation cannot be assessed. Nonetheless in placing windows, in landscaping, in interior decorating, and in selecting colors the impact on demand for energy should not be ignored.

Solar Energy--

A solar energy system can provide a substantial portion of the heating and cooling load of the house. However, because of the cost of such systems we assume that the residence has already been insulated to conform with modification F above. In the low baseline with this modification the total heating load is 41.2 x 10^6 Btu/yr and in the case of the high baseline it is 68.9 x 10^6 Btu/yr.* In Section 6 Table 37 , data were presented showing that in the northeast, solar energy systems can provide on the average between 75,000 Btu/yr and 120,000 Btu/yr for each square foot of collector panel depending on the other components of the system. Costs vary from \$6/10^6 Btu to \$11/10^6 Btu and the systems provide between 42 percent and 93 percent of the annual household energy requirement for space and water heating.

The single family residences in the baselines have approximately 1,000 sq ft of roof area available for solar panels. Assuming that on the average panels provided 100,000 Btu/sq ft per year, the roof area is sufficient to meet a substantial portion of the space heating requirement. Although the total output might be expected to be about 100 x 10^6 Btu/yr, in the winter months some form of auxiliary heating system would be needed given that heat loss would be greatest and insulation lowest. A conservative estimate might

---

* The heating load is lower than the fuel requirement because the efficinecy of the furnace is not included in the calculation. The fuel requirements would be 59.9 x 10^6 Btu/yr. and 106.0 x 10^6 Btu/yr.

TABLE 59. COOLING LOAD REDUCTIONS

Modification	Low Baselines*	High Baseline†		
		10^6 Btu yr.	10^3 kwh yr.	Percent Reduction
A	-	2.9	.9	10.1
B	-	1.7	.5	5.9
C	-	2.3	.7	8.0
D	-	5.4	1.6	18.9
E	-	7.7	2.5	26.9
F	-	11.4	3.3	39.9

* There is no air conditioning in the low baseline.

† High baseline 28.6 x 10^6 Btu/yr (8.38 x 10^3 kwh/yr).

Parameters:

1) Incremental reduction in Btu/sq ft living space/cooling hour from Table 34.

2) Living space: 1500 sq ft
Cooling hours: 400
Air conditioner efficiency: .65

be that a solar system could provide for either baseline approximately half of the heating requirement at a cost of $\$10/10^6$ Btu. The remaining fuel requirement would be 27.5×10^6 Btu/yr for the low baseline assuming a burner efficiency of 75 percent, and 53.0×10^6 Btu/yr, for the high baseline assuming an efficiency of 65 percent.

In the case of cooling (only the high baseline), the solar heating system could be augmented with an absorption cooling machine such as a lithium bromide absorption unit. Such a unit along with the necessary water cooling tower and other hardware would cost between $2,000 and $4,000. If the unit were added to the solar heating system, a conservative estimate would be that reduces the cooling load by 50 percent from 28.6×10^6 Btu/yr to 14.3×10^6 Btu/yr. Assuming the unit costs $3,000 the implied cost/$10^6$ Btu would be $21.* Even if the total cooling load could be accommodated by the system, the ratio would still be over $\$10/10^6$ Btu.

In Table 60 a summary of the conservation measures for modifications E and F and solar panels is presented against the baseline cases. The impact of increased burner efficiency and changing the thermostat settings is not included. Cost estimates are shown.

Water Heating--

As in the case of space heating several modifications which can reduce energy requirements are employed to illustrate the range of savings given the baseline use. The effects of insulating hot water pipes, increasing storage tank insulation and burner efficiency, the use of a flow through heater, and a solar heater are considered. Also, the savings to be gained by lowering the heater thermostat from 140°F to 120°F is shown. A description of all modifications and the estimates of their costs are presented in Table 61. The cost of a solar water heating unit does not appear in the table, since in most cases the unit is part of the space heating system. In the discussion above we assumed that the solar space heating system could provide energy at approximately $\$10/10^6$ Btu.

Table 62 contains estimates of reductions in energy requirements for hot water heating, based on the same approach as that used to develop the baselines above. The table also contains a column of the ratio of annual cost to the energy savings. As can be seen, few dramatic reductions in energy can be expected in either baseline unless a flow through unit or a solar unit is substituted for the more conventional storage water heater. Nonetheless, the cost-energy savings ratios show that given current fuel costs, all are reasonably attractive measures--particularly in the case of high energy use.

Lighting--

Of overriding importance in the conservation of energy for lighting is the behavior of individuals in the home. Estimates of reduction in the baseline are not made.

---

* The $3,000 would translate into $300/yr assumed interest of 8.75 percent and repayment period of 25 years. Thus $\$300/14.3 \times 10^6$ Btu = $\$21/10^6$ Btu.

TABLE 60. SUMMARY OF SELECTED CONSERVATION MEASURES FOR HEATING AND COOLING

	Low Baseline			High Baseline						
	Fuel Reduction (10^6 Btu/yr)	Remaining Fuel Requirement (10^6 Btu/yr)	Increment Cost (dollars)	Fuel Reduction (10^6 Btu/yr)			Remaining Fuel Requirement (10^6 Btu/yr)			Increment Cost (dollars)
	Heating	Heating		Heating	Cooling	Total	Heating	Cooling	Total	
Baseline	-	118.3	-	-	-	-	266.4	28.6	295.0	-
Modification E	35.5	82.8	683	90.3	7.7	98.0	176.1	20.9	197.0	880
Modification F	63.4	54.9	2,865	160.4	11.4	171.8	106.0	17.2	123.2	3090
Solar Heating † (plus Mod. F)	90.9	27.4	4,000	213.4	11.4	224.8	53.0	17.2	70.2	4000
Solar Cooling † (plus Mod. F)	-	-	-	-	14.3	14.3	53.0	14.3	67.3	3000
Total	-	-	7,548	-	-	-	-	-	-	10,970

* Cost of adding the modification or addition to all modifications made above.

† Solar Heating and Cooling assume insulation at level of modification F.

TABLE 61. ENERGY CONSERVATION MODIFICATIONS FOR WATER HEATING WITH COST ESTIMATES

Modification	Measure	Estimate of Additional Cost*
A	Insulate hot water pipes (assume 100 ft.)	$50 - $100
B	New ASHRAE standards heater;	$100
C	Direct Conversion Heater with electric ignition (80% efficiency)	$200 †
D	Direct conversion heater with electric ignition (80% efficiency); insulated pipes	$250 - $300
E	Solar water heater (assumed to supply 50 percent of heat requirement at 120°F)	see discussion

* Estimates of additional cost above that of standard storage unit in residence with uninsulated hot water pipes.

† This is a cost estimate obtained from Commonwealth Gas Company of Massachusetts. The company estimates that a direct conversion unit costs approximately $400 and a conventional storage unit $200. The additional cost of the flow through unit is then $200.

TABLE 62. WATER HEATING-ENERGY SAVINGS AND COSTS

	Low Baseline			High Baseline		
	Reduction (10^6 Btu/yr.)	Remaining Requirement (10^6 Btu/yr.)	Relative Effectiveness ($/$10^6$ Btu)	Reduction (10^6 Btu/yr)	Remaining Requirement (10^6 Btu/yr)	Relative Effectiveness ($/$10^6$ Btu)
Baseline	-	24.5		-	35.8	
Modification A (insulate pipes)	1.4*	23.1	3.6-6.2	2.0*	33.8	2.5-5.0
Modification B (ASHRAE heater)	1.6	22.9	6.3	2.3	33.5	4.4
Modification C (Direct conversion heater)	3.8	20.7	5.3	7.2	30.3	2.8
Modification D (Mod. A plus Mod. C)	5.8	18.7	4.3-5.2	9.2	28.3	2.7-3.3
Modification E (Solar heater)	12.3	12.2	10†	17.9	17.9	10†

* Based on an estimate of reduction in hot water use from Bulletin No. 198, California Department of Water Resources (38).

† Taken from discussion of space heating.

Kitchen--

Total energy use in the kitchen for the low baseline is assumed to be 7.0×10^6 Btu/yr. We consider only a few individual measures for energy savings since reductions are not very dramatic and cost estimates are questionable. Table 63 describes the measures and provides estimates of energy savings and costs. Although none of the measures provide very great reductions in energy use (with the possible exception of the elimination of gas pilot), in combination a reduction of over 50 percent can be achieved in the low baseline and almost 40 percent in the high baseline.

Washing and Cleaning--

Under this function the primary use of energy comes from the clothes dryer. In the low baseline 5.0×10^6 Btu/yr was allocated to the dryer, and in the high baseline 7.5×10^6 Btu/yr was allocated. The remainder, in each case, is used by the washing machine and miscellaneous cleaning devices. In Section 6 we have pointed out that the gasket seals on the dryer door should be kept in good repair and that the heat loss could be reduced by increasing insulation, but estimates of energy savings have not been made. However, even a 50 percent reduction in energy use only eliminates 2.3×10^6 Btu/yr from the overall household demand for the low baseline and 3.8×10^6 Btu/yr from the high baseline.

Bathroom--

Energy conservation is not considered under this function.

Living and Entertainment--

The important uses of energy are the color television with the "instant-on" feature (high baseline) which uses about 525 kwh/yr (approximately 1.8×10^6 Btu/yr) and radio/stereo which uses 150 kwh/yr (approximately $.5 \times 10^6$ Btu/yr). Elimination of the "instant-on" can reduce the television energy use by 50 percent. Other reductions are negligible.

Outdoors and Maintenance--

Energy conservation was not considered under these functions.

Summary of Energy Conservation--

To show the combined effect of the energy conservation measures on the baselines, modified baselines which incorporate a number of the conservation measures have been computed. In all cases those measures which lead to the greatest energy savings are included. Thus in the case of space heating the modified use figures are for residences with the highest levels of insulation plus solar heating systems. For water heating, the energy use figures are for a solar heater with auxiliary direct conversion flow-through heaters. Also, for each function total costs of the modifications are computed. The new energy use and cost figures appear in Table 64 .

In the modified low baseline the total energy requirement is approximately one-third of the original baseline. The estimate of the total cost is slightly more than $9,000. For the high baseline the modified energy requirement is 30 percent of the unmodified baseline. The total cost estimate is $13,350.

TABLE 63. ENERGY CONSERVATION MEASURES IN THE KITCHEN

Modification		Cost	Low Baseline Reduction (10^6 Btu/yr)	High Baseline Reduction (10^6 Btu/yr)
A	Install on/off switches on anticondensation heaters in refrigerator and freezer	$20*	N/A	1.0
B	Gas range with electric ignition and improved insulation†	$50	2.8	3.0
C	Increased insulation in refrigerator and freezer	$200	.9	1.9
D	Do not use dryer cycle in dishwasher	-	N/A	.4
Total Reduction			3.7	6.3

* Assume materials cost $5 and labor $15.

† Assume substitution of electric ignition for pilot reduces energy use by 2.2×10^6 Btu/year and that improved insulation reduces loss by another $.6 \times 10^6$ Btu/year in the low baseline and $.8 \times 10^6$ Btu in the high baseline.

TABLE 64. MODIFIED ENERGY BASELINES

	Modified Low Use			Modified High Use		
	Million Btu/yr	Portion of Total	Total Cost ($)	Million Btu/yr	Portion of Total	Total Cost ($)
Space Heating	27.4	.53	7,548	53.0	.47	7,970
Cooling	-	-	-	14.3	.13	3,000
Water Heating *	12.2	.23	1,530	17.9	.16	2,090
Lighting	1.7	.03	-	6.0	.05	-
Kitchen	4.3	.08	150	10.6	.10	290
- Range	[1.2]		[50]	[1.8]		[50]
- Dishwasher	-		-	[.8]		-
- Refrigerator	[1.6]		[100]	[3.0]		[120]
- Freezer	-		-	[3.5]		[120]
- Miscellaneous	[1.5]		-	[1.5]		-
Washing/Cleaning	5.6	.11	-	8.3	.07	-
- Washing machines	[0.3]		-	[0.5]		-
- Dryer	[5.0]		-	[7.5]		-
- Miscellaneous	[0.3]		-	[0.3]		-
Bathroom	0.1		-		-	-
- Miscellaneous						
Living/Entertainment	0.9	.02	-	1.7	.02	-
- Television	[0.3]		-	[0.9]		-
- Radio/Stereo	[0.3]		-	[0.5]		-
- Miscellaneous (hobbies)	[0.3]		-	[0.3]		-
TOTAL	52.2	1.00	9,228	111.9	1.00	13,350

* This assumes in the low baseline solar system costing approximately $1230 (based on a cost of $10/10^6 Btu/yr supply 12.3 x 10^6 Btu). If annual payment is the $123 using 8.75 percent interest and 25 yrs the total cost is $1230. Assume also $300 for auxiliary flow-through heater (over cost of conventional pipes). In the high baseline it is assumed that the total cost of the solar system plus auxiliary system is $1790 + $300 = $2090.

Gaseous Residuals

Given that we have assumed gaseous residuals generation to be proportional to energy use for those functions which burn fuel on the premises,the determination of gaseous residuals reductions is merely a matter of multiplying the ratios in Table A-5 by the energy reductions (converted to cubic feet of natural gas). Because the task of computing reductions is straightforward we present only one example using the energy figures in the modified baselines (Table 64). The results are contained in Table 65. Comparing them with the original baselines shows that reductions of almost 80 percent can be achieved.

Water Use and Liquid Residuals

In water conservation the functions of space heating and cooling, lighting, and living and entertainment are not considered.

Water Heating--

Insulating the hot water lines can reduce water use by somewhere between one and four percent at a cost of $.50 to $1.00 per foot of line (41). In the low baseline the savings of water would be between 660 gallons and 2,660 gallons per year and in the high baseline between 1,100 gallons and 4,500 gallons per year. If 100 feet of pipe are insulated at $1.00 per foot and if that resulted in a savings of one percent of the indoor water use the cost/ 1000 gallons saved would be $.02 in the low baseline and less than $.01 in the high baseline.*

Kitchen--

As has been shown above, few water saving devices exist for the kitchen. Flow aerators may reduce the consumption of water used for washing of foods, hands, and miscellaneous dishes, but there is opinion on using them differently. In the high baseline, we assume that the garbage grinder and the dishwasher are each used twice daily. If the dishwasher is used once a day and the garbage grinder is eliminated the kitchen water use can be reduced by 10,220 gallons/yr (a reduction of 40 percent of the kitchen use). Also, the hydraulic waste load is reduced and the major source of organic wastes is removed. Table 66 contains a summary.

The costs associated with these reductions are really a matter of convenience to the household as well as a matter of transforming the organic liquid residual into organic solid residual. In fact, not installing a garbage grinder can save between $100 and $250.

Washing and Cleaning--

Principal savings can be achieved by installing a washing machine with a water level selector and by using a "suds saver." A selector can reduce use by about 10 percent. In the low baseline 820 gallons/yr and in the high

---

* Assume that the pipe insulation cost is included in cost of structure and paid off in same fashion (i.e., at 8.75 percent interest over a period of 25 years).

TABLE 65. GASEOUS RESIDUALS OF MODIFIED LOW AND HIGH BASELINES (LBS/YR)

	Particulate	SO_2	SO_3	CO	Hydro-carbons	NO_2
Space Heating	0.3	-	-	0.5	0.2	2.1
Water Heating	0.1	-	-	0.2	0.1	0.9
Range	-	-	-	-	-	0.1
Total (Low Baseline)	0.4	-	-	0.7	0.3	3.1
Total (High Baseline)	0.7	-	-	1.4	0.6	5.7

TABLE 66. WATER AND WASTEWATER REDUCTIONS IN THE KITCHEN

(High Baseline)

Measure	Water Saved (gal/yr)	Waste Load Reduction (lb/yr) BOD	SS	TN	TP
eliminate garbage grinder	4,380	116.8	131.4	1.5	1.5
use dishwasher once/day	5,840	-	-	-	1.5
Total	10,220	116.8	131.4	1.5	3.0
Reduction as Percent of Kitchen functions	40	70	90	33	50

baseline 1,640 gallons/yr would be saved. The "suds saver" reduces washing water volume between 20 and 30 percent depending on the number of times the wash water is reused. The annual savings, assuming one reuse, would be approximately 1,640 gallons for the low baseline and 3,285 gallons for the high baseline. The selector can make a washing machine slightly more expensive -- perhaps $20 to $30. The cost of a "suds saver" is in the same range.

Also, use of a "suds saver" would reduce slightly the organic residuals. Since detergenets are an important source of BOD and phosphates, reuse of the wash water probably can lower the washing and cleaning components of these residuals by about 25 percent. The effects are summarized in Table 67.

Bathroom--

The greatest water savings can be realized within the bathroom function. Several combinations of water saving devices and estimates of their additional costs (i.e., cost incremented above conventional devices) are presented in Table 68. They range from modest changes such as dual flush mechanisms on toilets and low flow shower heads (Modification A in the table) to composting toilets and gray water recycling systems (Modification E in the table).

In Table 69 are found the reductions in the baselines which might be anticipated if the bathroom were equipped with these water saving features. Note that some equipment is used only in the high baseline. The more reliable estimates of the decreased water use are those for the toilet, since a decrease in the volume of water necessary to flush a toilet is translated directly into savings. The estimates of both shower and sink water saved are less reliable. A reduced flow rate does not necessarily translate into savings. For a bath it is unimportant and for shower and sink use it may have only a marginal effect on total water used. Nonetheless as the figures in the table demonstrate, remarkable reductions in water use can be achieved, some even with small investments in hardware which use water more efficiently.

For the low baseline the Modification A leads to slightly more than a 20 percent (9,490 gal/yr) reduction in water used in the bathroom and both Modification C and E lead to about a 55 percent (21,900 gal/yr) reduction. The other modifications lead to savings between these extremes. The cost/1,000 gallons of water saved (assuming the same interest rate and pay off schedule used above) ranges from .22 for Modification A to 10.8 for Modification E.*

In the case of the high baseline, savings are lowest for Modification A (33 percent) and highest for Modification E (92 percent). Calculating cost/1,000 gallons of water saved for the high baseline depends on the assumption made about necessity of duplicating equipment given that the residence has two bathrooms. We will assume that pressure tanks and gray water recycling plumbing need not be duplicated and that only one composting toilet is installed. We also assume that these items reflect almost all of the cost of the mechanisms. Given these assumptions and those made above about interest

---

* In the low baseline the costs of any shower modification are excluded because it is assumed that the bathroom has only a tub.

TABLE 67. WATER CONSERVATION MEASURES IN WASHING AND CLEANING

	Low Baseline				
	Water Saved* (gallon/yr.)	Reduction in Liquid Residuals (lb/yr.)			
		BOD_5	SS	TN	TP
Water level selector on machine	820	-	-	-	-
"Suds Saver"	1,640	4.5	.9	.2	.1

	High Baseline				
	Water Saved* (gallon/yr.)	Reduction in Liquid Residuals (lb/yr.)			
		BOD_5	SS	TN	TP
Water level selector on machine	1,640	-	-	-	-
"Suds Saver"	3,285	9.3	1.9	.4	.1

* The amounts of water saved with the water level selector and the "Suds Saver" are not strictly additive since the "Suds Saver" estimate is based on a full work load.

TABLE 68. WATER CONSERVATION MEASURES IN THE BATHROOM

Modification	Description	Cost
A	-dual flush	$ 16
	- shower head flow control	20
	- sink nozzle aerator	5
		$ 41
B	-pressurized tank toilet	$ 40
	-pressure balancing	40
	-sink nozzle aerator	5
		$ 85
C	-shallow trap toilet	-
	-gray water recycling system from bath, shower, and sink to toilet	$360
		$360
D	-pressurized flush toilet	$260
	-air-assisted shower head	275
		$535
E	-composting toilet (Clivus Multrum)	$2,000
	-air-assisted shower head	275
	-gray water recycle to irrigate lawn	360
		$2,635

TABLE 69. EFFECTS OF WATER SAVING DEVICES ON BATHROOM WATER USE

Low Baseline

Reduction (gal/yr) due to:

	Modification A	Modification B	Modification C	Modification D	Modification E
Toilet	7,300	12,650	21,900	19,160	21,900
Bath*	-	-	-	-	-
Sink	2,190	2,190	-	-	-
Total Reduction	9,490	14,840	21,900	19,160	21,900

* Given the specification in the low baseline that the bathroom is equipped with a tub, but not with a shower, a reduction in water use is not attributed to low flow shower heads or pressure balancing valves.

High Baseline

Reduction (gal/yr) due to:

	Modification A	Modifciation B	Modification C	Modification D	Modification E
Toilet	9,730	25,310	43,800	40,150	43,800
Bath	10,950	8,760	-	20,750	20,750
Sink	2,190	2,190	-	-	-
Total Reduction	22,870	36,260	43,800	60,900	64,550

rates and the payment schedule the cost/1,000 gallons saved is .36 for Modification A and 4.1 for Modification E. The others are within this range.

The reduction in wastewater hydraulic load is the water saved. However, the only measure which will have more than a marginal effect on the organic residuals is Modification E. In that case all the organics from the toilet and the kitchen are composted and the gray water residuals are put on the land.

Outdoors--

In the high baseline outdoor water use amounts to 29,200 gallons/yr given an irrigation water requirement of .25 inches/week during the spring and summer. No overwatering is assumed. Thus, no attempt is made to relate the use of sprinkler devices or soil moisture measurement devices to water savings. But the effect of a gray water recycling system which provides lawn irrigation water can be estimated. During the spring and summer 1,325 gallons/week are needed. If all the bathroom gray water is used approximately 500 gallons/week are available which would provide 40 percent of the requirement. Above in Section 6 we have assumed the total cost of such a system to be about $360.

We have not made estimates of the impact of landscaping with vegetation on water requirements or runoff, nor have we attempted to determine the consequences of efforts to reduce stormwater runoff.

Maintenance--

A spring type nozzle might be assumed to reduce water use in car washing by 50 percent from the equivalent of 10 gallons/day to 5 gallons/day. The cost would be marginal. Baseline data on the pollution problem of discarded lubricating oil do not exist.

Summary of Water Savings and Liquid Residuals Reduction--

Because of their interdependencies, conservation measures designed to save water and reduce liquid residuals do not lend themselves to the type of summary used above with energy conservation. However there are few points which might be reemphasized. First, the greatest savings in water can be achieved by introducing conservation measures in the bathroom--particularly by modification of the toilet. Second a substantial reduction in liquid residuals can be realized by eliminating garbage grinders which are the greatest single source of organics in our high baseline. Last, other large reductions in water use or liquid residuals generation depend on introducing those systems which have their own energy requirements (e.g., pressurized flush toilets and air-arrested showers) or systems which have not yet been accepted by large portions of the population (e.g., composting toilets).

Solid Residuals

Solid residuals can be reduced by the various measures discussed in Section 6. How some of these measures can be applied to the reduction of the low and high baselines of solid residuals generation is delineated below. Because the reduction in solid residuals depends so much on actions taken by members of the household we have selected a stepwise approach to illustrating options for reducing the residuals. The steps are segmented and each one implies an additional measure taken to lower the generation of residuals.

Some options are already implied in the low baseline since it was not defined primarily on the basis of fewer "potential solid residuals" (i.e., reduced material input to household) but rather on the assumption that the household already was taking some measures to reduce solid residuals. The low baseline is presented first.

Low baseline--

Table 70 contains measures which result in a reduction of the low baseline figures. The following reductions are derived from these measures (summarized in Table 71).

Step 1--Conscious participation in separation programs leads to weekly separation at a rate of 80 percent of newspaper and 80 percent of the maximum recycling rate of 60 percent of the total glass and metals component; this results in an incremental reduction of 73 kg/yr for newspaper and 59 kg/yr for glass and 44 kg/yr for metals; the inconvenience is assessed with B.

Step 2--Separation of materials not centrally collected and voluntary transport to satellite recycling centers could perhaps decrease the rate of generation of the "miscellaneous" component (for example, plastics) by 10-20 percent and the original paper component by 5-10 percent (brown paper bag and other cardboard materials); due to voluntary participation, the lower limits have to be assumed. This results in an incremental reduction of 15 kg/yr (miscellaneous) and 29 kg/yr (paper), respectively, at an inconvenience level of D.

Step 3--A source separation ordinance should make the source separation program slightly more effective; an increase to the 90 percent of the newspaper component and 90 percent to the maximum recyclable fraction of glass and metals (which was 60 percent of the total glass and metal components), results in an incremental reduction of 29 kg/yr (newspaper), and 15 kg/yr for glass and 7 kg/yr for metals, respectively, at an inconvenience level of B.

Step 4--Establishment of a compost heap would affect about 50 percent of the organics and possibly 80 percent of the garden waste; this yields a reduction of 277 kg/yr for organics and 263 kg/yr for garden wastes at an inconvenience rate of B.

Step 5--The enactment of a bottle bill would reduce presumably the metal and glass components of the total metal and glass residuals (baseline) by 20 and 35 percent, respectively; given that the remaining glass and metal residuals are separated and recovered at the rate assumed in Step 3, the incremental reduction is 29 kg/yr for glass and insignificantly small for metals at an inconvience of B.

Step 6--Very conscious efforts of the household to purchase only products with small packaging amount might reduce the original paper component by about 2-3 percent at an inconvenience level of D; the rate is so small because the household had avoided buying precooked food which is quite intensive in paper; incremental reduction might be 15 kg/day at an inconvenience D.

TABLE 70. REDUCTION OF SOLID RESIDUALS GENERATION
(Low Baseline)

	I	II	III
Step 1:			conscious participation in separation program
Step 2:		satellite recycling center accepting materials separately collected	separation of all materials take materials that are not centrally collected voluntarily to recycling center
Step 3: source separation ordinance; scavenger ordinance			conscious fulfillment of source separation ordinance
Step 4: city encouragement for use of compost heaps in gardens (organizational instructions)		set a place aside for a compost heap	put organics (including garden waste, but excluding bones from meals) on compost heap
Step 5: enactment of "bottle bill"			return containers covered under bottle bill
Step 6:			conscious effort of buying products with small amount of packaging material

I = administrative/institutional
II = physical/technological
III = behavioral

TABLE 71. REDUCTION OF LOW BASELINE SOLID RESIDUALS (kg/yr)

	Organics	Paper	Glass	Metals	Misc.	Garden	Total
Baseline	540	394	204	102	175	336	1,752
Step 1:							
Reduction	-	73	59	44	-	-	
Remainder	540	321	145	58	175	336	1,576
Step 2:							
Reduction	-	29	-	-	15	-	
Remainder	540	292	145	58	160	336	1,532
Step 3:							
Reduction	-	29	15	7	-	-	
Remainder	540	263	130	51	160	336	1,481
Step 4:							
Reduction	277		-	-	-	263	
Remainder	263	263	130	51	160	73	941
Step 5:							
Reduction	-	-	29	-	-	-	
Remainder	263	263	101	51	160	73	912
Step 6:							
Reduction	-	15	-	-	-	-	
Remainder	263	248	101	51	160	73	897

High baseline--

Table 72 contains measures which could reduce the solid residuals generation in a stepwise, accumulative way. The following reductions are derived from these measures (summarized in Table 73).

Step 1--For the reduction of paper component assume that 80 percent of the total newspaper component is separated for newspaper collection, this yields an increase of 117 kg/yr in separated newspaper; the inconvenience is assessed with B.

Step 2--Materials, such as glass and metals, are separated in addition to newspapers, and voluntary transport to neighborhood recycling center; assuming that 25 percent of the glass component and 30 percent of the metal component is recycled, the reduction is 102 kg/yr for glass and 58 kg/yr for metals at an inconvenience of D.

Step 3--All materials that have to be separated according to ordinance (newspaper, glass, metals) are regularly collected; assuming an increase of the reduction of the newspaper component to 90 percent and of the maximal recyclable glass and metal fraction (with is thought to be 60 percent of the total glass and metal component) to 90 percent yields an incremental reduction of 15 kg/yr for newspaper, 146 kg/yr for glass, and 73 kg/yr for metals at an inconvenience level of B.

Step 4--Establishment of a compost heap would affect about 50 percent of the organics (computed only from the amount that is ground up in the garbage grinder) and possibly 80 percent of the garden waste; this yields a reduction of 263 kg/yr at an inconvenience rate of B; by reducing the amount of pre-cooked food purchased, the original paper component is reduced by 3 percent (15 kg/yr) at an inconvenience of C.

Step 5--The enactment of a bottle bill would reduce presumably the total metal and glass components of the residuals (baseline) by 20 and 35 percent respectively; given that the remaining glass and metal residuals are recovered at the rate assumed in Step 3, the incremental reduction is 15 kg/yr for metals and 44 kg/yr for glass at an inconvenience rate of B.

Step 6--Very conscious efforts of the household to purchase only products with small packaging amount might reduce the original paper component by about 5 percent at an inconvenience level of D.

TABLE 72

REDUCTION OF SOLID RESIDUALS GENERATION (High Baseline)

I	II	III
Step 1:		
increase reliability of separate collection of newspaper		conscious participation in separation program
increase frequency of collection to (1/week) at days of regular collection		
Step 2:		
	Recycling center for citywide operation with satellite centers (paper, glass, metals)	
	bins for separating materials	separation of all materials
		take materials that are not centrally collected voluntarily to recycling center
Step 3:		
regular collection of all separated materials		conscious fulfillment of source separation ordinance
source separation ordinance		
scavenger ordinance		
Step 4:		
city encouragement for use of compost heaps in gardens (organizational instructions)	set a place aside for compost heap	put organics (including garden waste, but perhaps excluding bones from meals) on compost heap (instead of grinding them up)

TABLE 72 (continued)

I	II	III
Step 4 (continued)		reduce amount of pre-cooked and package food; buy fresh food whose residuals can be composted
Step 5:		
enactment of "bottle bill"		return containers covered under bottle bill
Step 6:		
		conscious efforts of buying products with small amount of packaging materials

TABLE 73. REDUCTION OF HIGH BASELINE SOLID RESIDUALS (kg/yr)

	Organics	Paper	Glass	Metals	Misc.	Garden	Total
Baseline	29	511	423	204	292	336	1,795
Step 1:							
Reduction		117					
Remainder	29	394	423	204	292	336	1,678
Step 2:							
Reduction			102	58			
Remainder	29	394	321	146	292	336	1,518
Step 3:							
Reduction		15	146	73			
Remainder	29	379	175	73	292	336	1,284
Step 4:							
Reduction		15				263	
Remainder	29	362	175	73	292	73	1,004
Step 5:							
Reduction			44	15			
Remainder	29	362	131	58	292	73	945
Step 6:							
Reduction		29					
Remainder	29	333	131	58	292	73	916

Summary--

The reduction of the total load of solid residuals was close to 50% in both baselines even though the reduction of each individual component was quite different. The low baseline was largely decreased due to composting of organics and garden waste. The decrease of the high baseline was made possible by composting garden wastes and separating paper, glass and metal fractions,because the garbage grinder was used to dispose of all those organics which should not be put on a residential compost heap. Thus, given residential property with gardens, composting garden waste is the single most important reduction in the presence of garbage grinders; while in its absence composting organics together with garden wastes make up the single largest reduction. If additional paper fractions would be separated at the same scale as newspaper, reduction of the paper component would cause another major decrease of the total load.

REFERENCES

1. Bower, B.T., Ehler, C.N., and Kneese, A.V., "Implementation Incentives for Environmental Quality Management," Environmental Science and Technology, Volume 11, March 1977.

2. Bower, B.T., "Studies of Residuals Management in Industry," in E.S. Mills (ed.), Economic Analysis of Environmental Problems, Columbia University, 1975.

3. MacAvoy, P.W., "Comment on 'Bower, B.T., Studies of Residuals Management in Industry'," in E.S. Mill (ed.), Economic Analysis of Environmental Problems, Columbia University Press, 1975.

4. Carroll, T. Owen, et al., Land Use and Energy Utilization (Interim Report), for Office of Conservation and Environment, Federal Energy Administration, February 1976, p. 55.

5. American Society of Heating, Refrigeration and Air Conditioning Engineers, Inc., ASHRAE - 1973 Systems Handbook.

6. U.S. Environmental Protection Agency (EPA), "Compilation of Air Pollutant Emission Factors," Second Edition, April 1973, AP-42; U.S. EPA, Supplements #1, 2, and 3 to the above.

7. Committee on Finance, U.S. Senate, Energy Statistics, Washington, D.C.: U.S. Government Printing Office, July 1975.

8. American Gas Association, 1974 Gas Facts, Arlington, Virginia, 1975.

9. Edison Electric Institute, "Annual Energy Requirements of Electric Household Appliances," New York, N.Y., 1975.

10. Boston Edison, "The Wise Use of Energy," Boston, Massachusetts, undated.

11. Hittman Associates, "Residential Energy Consumption," Phase I Report, prepared for Department of Housing and Urban Development, March 1972.

12. Hittman Associates, "Multifamily Housing Final Report," prepared for U.S. Department of Housing and Urban Development, Washington, D.C.: Government Printing Office, June 1974.

13. American Society of Heating, Refrigeration and Air Conditioning Engineers (ASHRAE), Inc., "Energy Conservation in New Building Design," ASHRAE Standard No. 90-75, 1975.

14. "Project Independence," Federal Energy Administration Project Independence Blueprint Final Task Force Report, Volume 1, prepared by the Interagency Task Force on Energy Conservation, under direction of Council on Environmental Quality, November 1974.

15. Consumer Report, December 1975, pp. 7-8.

16. "Patterns of Energy Consumption in the U.S.," Stanford Research Institute, January 1972.

17. Bennett, E.R., K.D. Linstedt and J. Felton, "Comparison of Septic Tank and Aerobic Treatment Units: The Impact of Wastewater Variations on These Units," Proceedings of the Rural Environmental Engineering Conference, University of Vermont, Burlington, Vermont, 1975.

18. Ligman, K., N. Hutzler, and W.C. Boyle, "Household Wastewater Characterization," Journal of Environmental Engineering Division ASCE, 100, EEL, February 1974, pp. 201-215.

19. Witt, M.D., "Water Use in Rural Homes," Small Scale Waste Management Publication, 1974, 27 pp.

20. Association of Home Appliance Manufacturers, "Energy Data," Chicago, Illinois, undated.

21. Citizen's Advisory Committee on Environmental Quality, "Citizen Action Guide to Energy Conservation," 1973.

22. Siegrist, R., M. Witt, and W.C. Boyle, "Characteristics of Rural Household Wastewater," Journal of Environmental Engineering Division ASCE, 102 June 1976, pp. 533-548.

23. Bennett, E.R. and K. Linstedt, "Individual Home Wastewater Characterization and Treatment," Environmental Resources Center Completion Report Series no. 66, Colorado State University, Fort Collins, Colorado, July 1975.

24. Cohen, S. and H. Wallman, "Demonstration of Waste Flow Reduction for Households," prepared for U.S. EPA, September 1974, DPA-670/2-74-071.

25. Census of Housing, 1970, Bureau of Census, Department of Commerce, Washington, D.C.

26. Environment Information Center, Inc., The Energy Index, Volume 3, New York, N.Y., December 1975.

27. Merchandising Week 102, (8), 1970.

28. Center for Environmental Studies, Princeton University, "Energy Conservation in Housing," continuation proposal submitted to the National Science Foundation, 1975.

29. Bailey, J.R., R.J. Benoif, J.L. Dodson, J.M. Robb and H. Wallman, "A Study of Flow Reduction and Treatment of Wastewater from Households," U.S. EPA, 11050FKE 12/69, December 1969.

30. Haney, P.D. and C.L. Hamann, "Dual Water Systems," Journal American Water Works Association, 57, September 1965.

31. Laak, R., "Home Plumbing Fixture Waste Flows and Pollutants," Unpublished Report, University of Connecticut, Storrs, Connecticut, 1972.

32. Ligman, K., "Rural Wastewater Simulation," M.S. Independent Study Report, University of Wisconsin, Madison, Wisconsin, 1972.

33. Wallman, H., " Should We Recycle/Conserve Household Water?" 6th International Water Quality Symposium, Washington, D.C., April 18-19, 1972.

34. Reid, G.W., "Projection of Future Municipal Water Requirements," Southwest Water Works, S. 46;18, 1965.

35. Witt, M., R. Siegrist, and W.C. Boyle, "Rural Household Waste-Water Characterization," Proceedings of the National Home Sewage Disposal Symposium, December 1974, pp. 79-88.

36. "Public Water Supplies in the 100 Largest Cities in the United States," U.S. Geological Survey, Water Supply Paper No. 1812, 1962.

37. Laak, R., "The Effect of Aerobic and Anaerobic Household Sewage Pretreatment of Sewage Beds," Ph.D. thesis presented at the University of Toronto, Toronto, Ontario, Canada, 1966.

38. Water Conservation in California, Department of Water Resources, Bulletin No. 198, May 1976.

39. Howe, W. and F.P. Linaweaver, Jr., "The Impact of Price on Residential Water Demand and its Relation to System Design and Price Structure," Water Resources Research, Volume 3, No. 1, 1967.

40. Linaweaver, F.P., et al., Report V on Phase Two of the Residential Water Use Project, Department of Environmental Engineering Science, Johns Hopkins University, 1966.

41. Milne, M., Residential Water Conservation, California Water Resources Center Report No. 35, March 1976.

42. Andrews, Richard A. and Martha R. Hammond, Characteristics of Household Water Consumption in Three New Hampshire Communities, Water Resources Research Center, University of New Hampshire, December 1970.

43. Niessen, W.R. and S.H. Chansky, "The Nature of Refuse," Proceedings of 1970 National Incinerator Conference, ASME Incinerator Division, Cincinnati, Ohio, May 17-20, 1970, p. 4.

44. Comprehensive Studies of Solid Waste Management - First and Second Reports, HEW, Public Health Service Publication No. 2039, p. 20.

45. Darnay, A. and W.E. Franklin, Salvage Markets for Materials in Solid Wastes, for EPA, Contract No. CPE 69-3, 1972, p. 156-2.

46. Meier, P.M., J. Kühner, and R.E. Bolton, Wet Systems for Residential Refuse Collection: A Case Study of Springfield, Massachusetts, Report by Curran Associates, Inc. to EPA Solid and Hazardous Waste Research Laboratory, Cincinnati, Ohio, March 1974 (published by NTIS, PB-234-499/AS).

47. Sartor, J.D. and G.B. Boyd, "Water Pollution Aspects of Street Surface Contaminants," U.S. EPA, EPA-R2-72-081, November 1972.

48. Sutherland, R. and R. McCuen, "A Mathematical Model for Estimating Pollution Loadings in Runoff from Urban Streets," Chapter 7 in "Flood Runoff from Urban Areas," by R. McCuen, University of Maryland Water Resources Center, 1975.

49. American Public Works Association, "Nationwide Characterization, Impacts and Critical Evaluation of Stormwater Discharges, Non-Sewered Urban Runoff and Combined Sewered Overflows," Progress Report to U.S. EPA, August 1974.

50. Young, G.K., "NPS Impact and Urban Holding Capacity: Major Issues," Proceedings, Urban Stormwater Management Seminars, Water Quality Management Guidance Document WPD 03-76-04, pp. I/98 - 122, U.S. EPA, January 1976.

51. Meta Systems Inc, "New Residential Development and the Quantity and Quality of Runoff," Proposal submitted to U.S. EPA, 10 December 1976.

52. Development Document for Proposed Effluent Limitations Guidelines and New Source Performance Standards to the Auto and Other Laundries, EPA Office of Enforcement and General Council, April 1974.

53. Decision Makers Guide in Solid Waste Management, EPA Office of Solid Waste Management Programs, SW-500, 1976.

54. Maugh, Thomas H., II, "Rerefined Oil: An Option that Saves Oil, Minimizes Pollution," Science, Volume 193, 17 September 1976.

55. Brochure "Custom Heat Recovery Systems: Industrial, Commercial, Residential," Maxi-Heat Recovery Systems, Inc., Milton, Massachusetts, 1977.

56. Massdesign, Solar Heated Houses, for New England and Other Temperate Climates, Third Edition, July 1975, pp. 7 and 43.

57. Ward, Dan S., et al., Performance of a Residential Solar Heating and Cooling System, Colorado State University, June 1975.

58. Arthur D. Little, Inc., "An Impact Assessment of ASHRAE Standard 90-75, Energy Conservation in New Building Design," December 1975, pp. 35 and 71.

59. Hill, James E. and Thomas E. Richtmyer, "Retrofitting a Residence for Solar Heating and Cooling: The Design and Construction of the System," NBS Technical Note 892, National Bureau of Standards, Washington, D.C., November 1975.

60. Personal Communication with R.D. Johnston, Commonwealth Gas Company of Massachusetts, February 1977.

61. Personal Communication, February 1977.

62. Personal Communication with Boston Stove Company, March 1977.

63. SCS-Engineers, "Analysis of Source Separation Collection of Recyclable Solid Waste," EPA-publication SW-95C.1, 1974; NTIS-PB-239775.

64. National Analysts, "Metropolitan Housewives' Attitudes toward Solid Waste Disposal," Report Prepared for U.S. Environmental Protection Agency, EPA-R5-72-003, 1972.

65. Resource Planning Associates, Inc., "Source Separation-The Community Awareness Program in Somerville and Marblehead, Massachusetts," Report Prepared U.S. Environmental Protection Agency, EPA/530/SW-551, November 1976.

66. Newspaper clippings over the last 12 months relating to bottle bill and source separation programs in the Boston area.

67. Lager, J. and G. Smith, "Urban Stormwater Management and Technology: An Assessment," Metcalf & Eddy, Inc., for U.S. EPA, December 1974.

68. Irwin, W.A., "Alternative Institutional Approaches to Recycling Used Oil," Paper #12 of the Symposium on the International and Comparative Dimensions of Water Recycling and Reuse, Bellagio, Italy, 12-17 November 1976.

APPENDIX A

HOUSEHOLD FUNCTION: DETAILED PRESENTATION

INTRODUCTION

Each of the household functions (see Table A-1) is discussed in this appendix. Included are mass and energy flow charts of the respective functions,* accompanied by a discussion and summary of available data on water use, energy use, liquid residuals generation (including 5-day biochemcial oxygen demand, suspended solids, total nitrogen and total phosphorus), gaseous residuals generation (including particulates, hydrocarbons, sulfur oxides, nitrogen oxides, and carbon monoxide) and available data on costs of conservation and modification alternatives. Discussion of solid residuals generation is concentrated within the Kitchen function.

The extent of coverage differs between the sections and within each section among the different categories of activities and flows. These differences reflect primarily our judgments as to the relative importance of each function and category within the household and the number of available alternatives.

SPACE HEATING AND COOLING

Space heating and cooling is the household function which uses the greatest amount of energy. In a typical single-family home in the northeast with 5500 heating degree days and 400 cooling hours, over 65 percent of the household energy used will be devoted to this function (1). The space heating/cooling flow charts (Figures A.1 and A.2) show the flow of energy through each of the functions and illustrate the points at which residuals are generated.

The discussion of these functions proceeds backwards in this appendix for each of the charts (i.e., from structure to HVAC (Heating, Ventilating and Air-Conditioning) system to fuel to residuals generated). This is done for two reasons, the first being that it is our intent to give users of this report an idea of the heating/cooling load for various kinds of structures and so it is logical to begin with the design of the structure. The second is that our ultimate objective is the identification of measures for energy conservation in new buildings and the best place to start is the structure itself.

---

* Mass and energy flow charts are not included for the Maintenance Function or the Outdoor Function.

TABLE A-1. HOUSEHOLD FUNCTIONS AND RELATED ACTIVITIES

- Space Heating and Cooling
- Water Heating
- Lighting
- Kitchen
  - food preparation
  - cooking
  - dish washing
- Washing and Cleaning
  - clothes washing and drying
  - house cleaning
- Bathroom
  - toilet
  - bathing
  - sink
  - personal upkeep
- Living and Entertainment
  - audio-visual
  - hobby
- Outdoors
  - gardening
  - recreation
  - other
- Maintenance
  - automotive
  - upkeep, repair

FIGURE A.1. SPACE HEATING: ENERGY/RESIDUALS

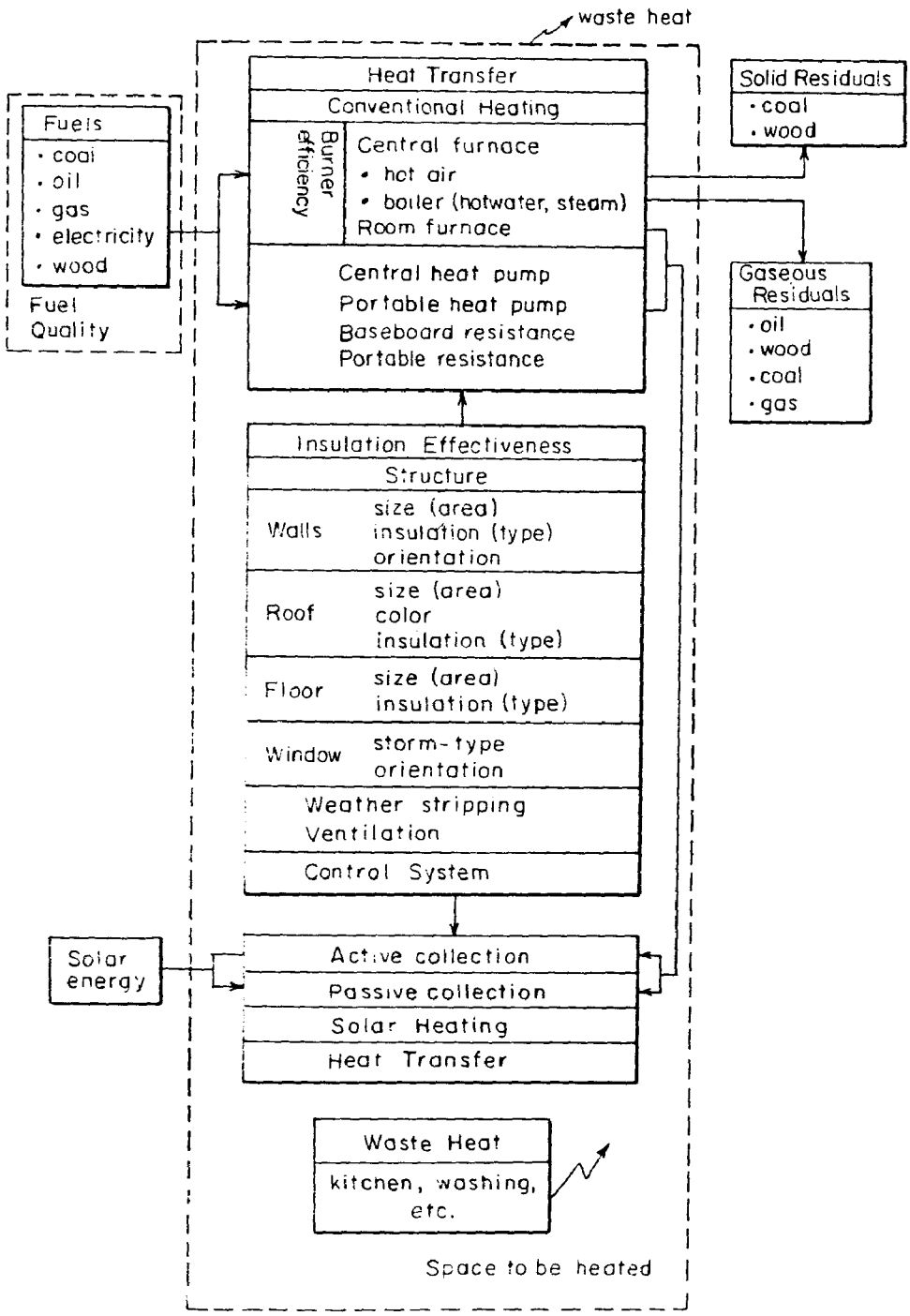

FIGURE A.2. COOLING: ENERGY/RESIDUALS

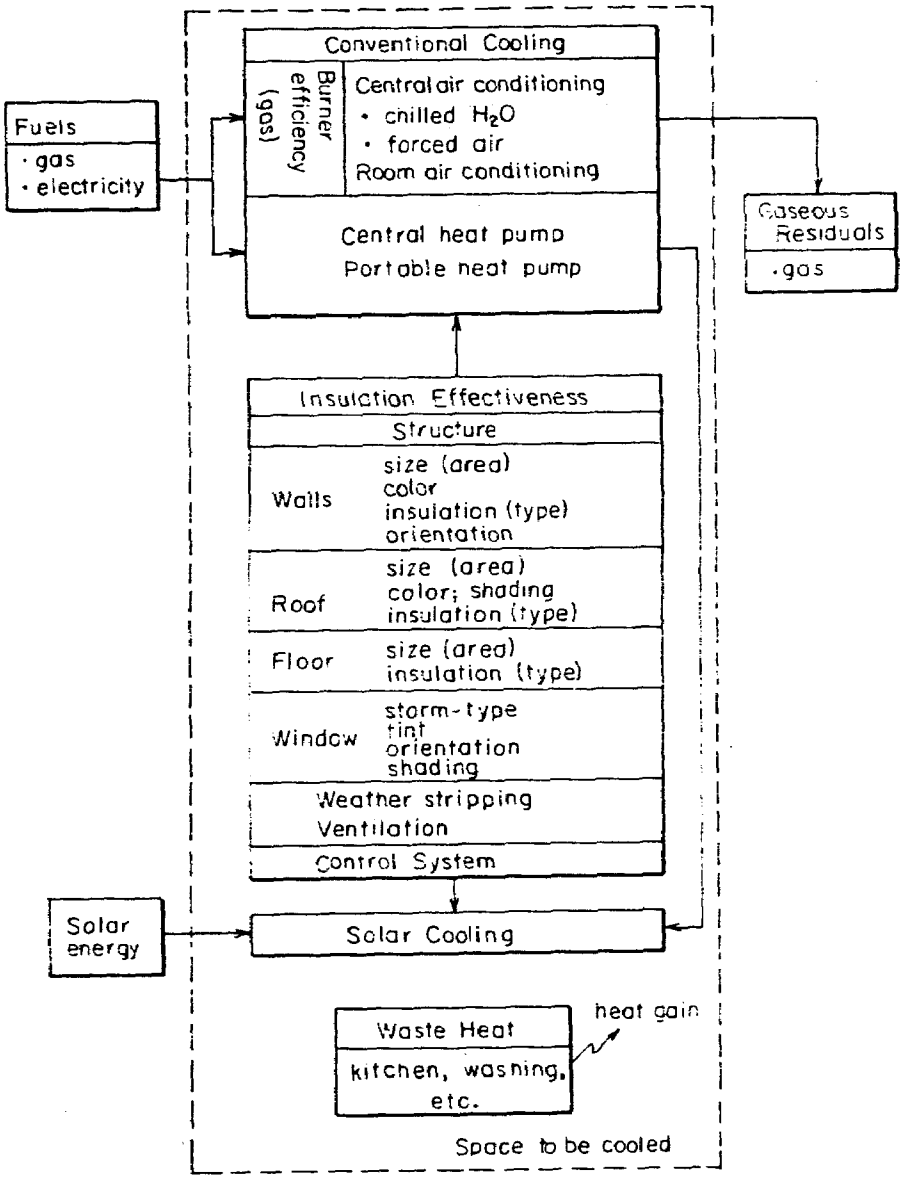

The discussion of heating and cooling presents tables which describe the heating/cooling loads for various kinds of residential structures at various levels of thermal-structural soundness. We then discuss how these tables may be used both to estimate the energy needs of new developments and to ascertain the energy saving value of structural improvements. Next we mention the various types of HVAC systems which might be employed along with their respective fuels. Residuals generated by the various fuels are then discussed.

Heating and Cooling Load Tables

Tables were constructed for a variety of typical residential structures to show heat loss per sq ft per degree day, and cooling load per sq ft per cooling day.*

Tables were developed for four types of residential dwellings:

1. Single Family, one-story, unattached
2. Single Family, two-story, unattached
3. Attached Split-Level Townhouses
4. 3-story, Low Rise apartments.

Initially, for each of the construction types three different wall materials (i.e., wood, brick veneer, and aluminum siding) were considered.† However, because the heat loss coefficients for three wall materials vary by only a few percent one set of coefficients which is an average of wood and brick veneer is used. Five levels of thermal soundness are also considered:

1. Uninsulated, no insulation on walls, floor or roof. Single windows.
2. FHA '65,‡ enough insulation to comply with the 1965 FHA minimum property standards for federally insured homes.
3. FHA '73, enough insulation to comply with the 1973 FHA minimum property standards for federally insured homes.
4. ASHRAE 90-75, enough insulation to comply with ASHRAE standards for heat loss.
5. Best, the maximum amount of insulation for each type of construction; for example for a frame wall with a 4" space, 3-5/8" of insulation is the maximum.**

---

* See Appendix B for method of heat loss calculation.

† These wall types represent construction characteristics reported in Characteristics of New Construction. These types encompass most of the existing stock of houses as well as new construction.

‡ See Appendix C for summary of regulations.

** Note: We designed our houses with a combined roof/ceiling, as given in Thermal Design of Buildings. It is possible to put more roof insulation in a structure with an unheated attic. Actually, in Section 5 the Best level of insulation has been increased to 24" in the ceiling and 5-5/8" in the walls. (See Tables 7 and 8). These changes were made in response to review comments on the draft report.

Table A-2 contains the complete array of insulation options. For each structure at each level of thermal soundness heating load and cooling load (Btu) per sq ft were calculated.*

TABLE A-2. INSULATION IN STRUCTURES

	None	FHA '65	FHA '73	ASHRAE 90-75	Best
Single Family 1-story					
Wall	-	-	1"	3 5/8"	3 5/8"
Roof	-	1"	3"	5"	6"
Window	Single	Single	Single	Single	Storm
Floor	-	1 1/2"	1 1/2"	2"	2"
Single Family 2-story					
Wall	-	-	1"	3 5/8"	3 5/8"
Roof	-	1"	3"	5"	6"
Window	Single	Single	Single	Single	Storm
Floor	-	1 1/2"	1 1/2"	2"	2"
Townhouse 9 Row					
Wall	-	1"	3"	1 1/2"	3 5/8"
Roof	-	2"	5"	5"	6"
Window	Single	Single	Single	Single	Storm
Floor	-	-	1 1/2"	2"	2"
3-Story Low Rise					
Wall	-	-	2"	3 5/8"	3 5/8"
Roof	-	1"	3"	4"	6"
Window	Single	Single	Single	Single	Storm
Floor	-	-	1 1/2"	2"	2"

The tables† were constructed assuming a winter indoor temperature of 65°F and summer indoor temperature of 75°F. The figures for the 20 cases in each table have units of Btu per sq ft of floor area heated (or cooled) per degree day (or cooling hour). For reasons explained in Appendix B the cooling load tables have two parts, one for an average outdoor temperature of 90°F and the other for a temperature of 85°F. In an example below, use of both the heating and cooling tables in conjunction with average degree days and cooling hours for the northeast is demonstrated.

* Details of calculations in Appendix B.

† Tables A-3 and A-4.

TABLE A-3. HEAT LOSS -- BTU/SQ FT/DEGREE DAY

	Uninsulated	FHA '65	FHA '73	ASHRAE 90-75	Best
Single Family 1-story	22.4	17.1	11.0	10.3	8.7
Single Family 2-story	19.2	17.3	11.2	9.9	7.9
Townhouse Split Level	16.8	12.0	8.2	9.2	7.3
Low Rise 3-story	10.8	10.8	6.7	6.2	4.5

TABLE A-4. COOLING LOAD FOR AVERAGE OUTDOOR TEMPERATURE OF 90°F
(Units -- Btu/sq ft/cooling hour)

	Uninsulated	FHA '65	FHA '73	ASHRAE 90-75	Best
Single Family 1-story	40	35	27	24	21
Single Family 2-story	36	33	27	24	21
Townhouse Split Level	24	19	15	16	13
Low Rise 3-story	19	18	14	14	11

COOLING LOAD FOR AVERAGE OUTDOOR TEMPERATURE OF 85°F

	Uninsulated	FHA '65	FHA '73	ASHARAE 90-75	Best
Single Family 1-story	35	31	25	22	19
Single Family 2-story	31	29	24	22	19
Townhouse Split Level	21	17	14	14	12
Low Rise 3-story	17	16	13	13	11

Computing Fuel Use and Emissions for Heating and Cooling

A one-story, single family house with 1,500 sq ft of living space constructed according to FHA '65 standards loses about 25,650 Btu/degree day (1,500 sq ft x 17.1 Btu/sq ft/degree day), when the indoor temperature is kept at 65°F. Multiplying the heat loss 5000 degree days gives an annual heat loss of 128.25×10^6 Btu. If the residence is equipped with a gas forced air heating system (conversion efficiency of 75 percent) the total fuel requirements will be

$$128.25 \times 10^6 \text{ Btu/yr} \div (1{,}040 \text{ Btu/cu ft} \times 0.75) = 164.42 \times 10^3 \text{ cu ft}$$

of gas. To translate the fuel requirement into emissions the conversion factors in Table A-5 are used. Total emissions for our example were:

	lbs/yr
Particulates	1.6
SO_2	0.1
SO_3	-
CO	3.3
Hydrocarbons	1.3
NO_2	13.1

For a comparison, estimated air emissions for a variety of residential structures are displayed in Table A-6.

If the calculations are to be done for a different region of the country an adjustment can be made on the basis of the ratio of degree days. For example, the average number of degree days per year in Denver, Colorado is 6200. Thus for the same kind of single family house, the heat loss would be 160×10^6 Btu/yr (128.25×10^6 Btu/yr x (6200/5000) with comparable increases in fuel use and residuals generation. Determining the effect of changing the thermostat setting is done on the same principle using conversion ratios found in Table B-3 for various combinations of thermostat setting and average outdoor temperature. Thus if the thermostat were turned up to 70°F and the average outdoor temperature were 42°F the heat loss would be 153×10^6 Btu/year.

Energy requirements for cooling are computed in a similar fashion using the cooling load table in conjunction with average annual cooling hour figures and average outdoor temperatures. However, with cooling it is not necessary to calculate air emissions for the household since they occur at the power plant. With an average outdoor temperature of 85°F during the summer and an average of 400 cooling hours in the northeast, our single family house with central air conditioning will have a total cooling load of 21×10^6 Btu = 35 Btu/sq ft/cooling hour x 400 cooling hours x 1,500 sq ft. This is a little less than 20 percent of the heating load.

TABLE A-5. EMISSION RATES FOR GAS AND OIL (2)
(LBS/YR)

	Gas[a]	Oil[b]
Particulates	10	10
SO_2	0.6	142S[c]
SO_3		2S[c]
CO	20	5
Hydrocarbons	8	3
NO_2	80	12
HCHO (aldehydes)		2

a. Emission rate in lbs/10^6 cu ft.

b. Emission rate in lbs/10^3 gal.

c. S is equal to percent by weight of sulfur in oil.

TABLE A-6. AIR EMISSIONS DUE TO FUEL USE FOR RESIDENTIAL HEATING

			Single Unit[a]	540 Units	Single Unit[b]	540 Units	Single Unit[c]	540 Units	Single Unit[d]	540 Units	8 units[e]	540 Units
			A	A	C	C	E	E	Hittman House	Hittman House	Hittman Town House	Hittman Town House
Heat Load BTU/year			13×10^7		9.86×10^7		5.78×10^7		8.53×10^7		58×10^7	
Fuel Use[f]	gas ($ft^3 \times 10^6$)		.179	96.7	.135	72.9	.0789	42.6	.117	63.2	.83	56.0
	oil ($gal \times 10^3$)		1.16	626.0	.880	475.0	.516	279.0	.750	405.0	5.18	350.0
Emissions (lbs.)[g]	particulates	gas	1.79	970.0	1.35	729.0	.79	427.0	1.17	632.0	8.3	560.0
		oil	11.6	6,264.0	8.8	4,752.0	5.16	2,786.0	7.5	4,050.0	51.8	3,500.0
	SO_2	gas	.107	58.0	.081	44.0	.047	25.0	.070	38.0	.498	33.6
		oil	164.7S	88,938S	125S	67,500S	73.3S	39,582S	106.5S	57,510S	735S	49,612S
	SO_3	gas	-	-	-	-	-	-	-	-	-	-
		oil	2.32S	1,253S	1.76S	950S	1.03S	556S	1.5S	810S	10.4S	702S
	CO	gas	3.58	1,933.0	2.7	1,458.0	1.58	853.0	2.35	1,269.0	16.6	1,120.0
		oil	5.8	3,132.0	4.4	2,376.0	2.58	1,393.0	3.75	2,025.0	25.9	1,748.0
	Hydrocarbons	gas	1.43	772.0	1.08	583.0	.63	340.0	.94	508.0	6.64	446.0
		oil	3.48	1,879.0	2.64	1,426.0	1.55	837.0	2.25	1,215.0	15.5	1,046.0
	NO_2	gas	14.3	7,722.0	10.8	5,830.0	6.3	3,400.0	9.4	5,080.0	66.4	4,482.0
		oil	13.9	7,506.0	10.6	5,724.0	6.19	3,343.0	9.0	4,860.0	62.0	4,185.0
	HCHO (aldehydes)	gas	-	-	-	-	-	-	-	-	-	-
		oil	2.32	1,253.0	1.76	950.0	1.03	556.0	1.5S	810.0		

Source: "Land Use-Water Quality Relationship," prepared under contract no. 68-01-2622 for the Environmental Protection Agency, by Meta Systems Inc, March 1976.

Footnotes: see next page.

Footnotes to Table A-6.

a. House Type A: no insulation, 1500 sq ft, 8 ft ceiling, 70° indoor, 0° outdoor, 4500 degree days, calculation done with Heat Cost Calculator.

b. House Type C: 2" or more of insulation on walls and ceiling, 1500 sq ft-8 ft ceiling, 70° indoor, 0° outdoor, 4500 degree days, calculation done with Heat Cost Calculator.

c. House Type E: 6" insulation on ceiling, 2" or more of insulation on sidewalls, storm sash, 1500 sq ft, 8 ft ceiling, 70° indoor, 0° outdoor, 4500 degree days, calculation done with Heat Cost Calculator.

d. Hittman House: 5" ceiling insulation, 2-1/4" sidewall insulation, 1500 sq ft, 8 ft ceiling, 75° indoor, 10° outdoor, 4500 degree days, calculation done using the aggregate form of the ASHRAE method.

e. Hittman Townhouse: 5" ceiling insulation, 2 air spaces in sidewall, each unit 1300 sq ft, 8 ft ceilings, townhouses in groups of 8 units -- 4 upstairs, 75° indoor, 10° outdoor, 4500 degree days, calculation done using the aggregate form of the ASHRAE method.

f. Gas efficiency assumed 70 percent; oil efficiency assumed 80 percent.

g. For emission factors, see Table A-5.

WATER HEATING

Residential water heating utilizes about 15 percent of the total residential energy consumption for the nation, accounting for about 3.9 (10^{12}) Btu's in 1970 (3). This makes water heating the second most important residential energy consumption activity, after space heating. Virtually all dwelling units which have plumbing also have hot water; thus future growth of energy consumption for this function will depend primarily on population growth and growth in the per capita use of hot water, not on increased appliance saturation. Figure A.3 shows the flow chart of a residential hot water heating system.

The two basic types of hot water systems are the direct heating system and the storage system. In the former, the water is heated as it is being used, thus the heating device must be sized to deliver the required water temperature at the maximum design flow rates and minimum design water inlet* temperature. In many cases the direct water heating system is combined with the furnace used for space heating. In storage systems water is heated more slowly and stored in a tank (which usually doubles as the water heater) until it is needed. In a storage system thermal demands are met partly from the stored hot water, thereby reducing the size of the heating device required. The storage system may have somewhat higher initial costs than direct heating, but allows for more efficient heating element sizing and operation. Overall, storage systems are usually more economical and are preferred in most new homes.

In most single family homes, townhouses, and many garden apartments each individual dwelling unit has its own storage heater. However, in most larger multiple-unit structures, apartments are served by a single, centralized hot water system. Such a system entails a more expensive distribution system, but there are significant countervailing economies. Storage required per capita or per unit is generally lower because all peak demands do not occur simultaneously. Also, the storage is more thermally efficient because the heat transfer surface per unit of volume decreases with increasing tank size (but losses in the distribution lines are increased). Because of the long lengths of distribution lines in large apartment buildings, a considerable amount of water will be stored and will be cooled in the pipes during periods of low use. Under these conditions it is both inconvenient and wasteful for the consumer to "let the water run" until hot water is obtained. Thus provision is made to recirculate water from the pipes back to the storage heater.

The three types of heating elements most commonly employed are gas and oil burners and electric resistance heaters. Gas heaters are the most popular, being employed in 48 percent of the occupied dwelling units in the northeast region, 74 percent of the units in the north central region, 57 percent

---

* In this section we refer to inlet temperature as the temperature of the cold water entering the heating unit. The outlet temperature is the temperature of the heated water leaving the unit.

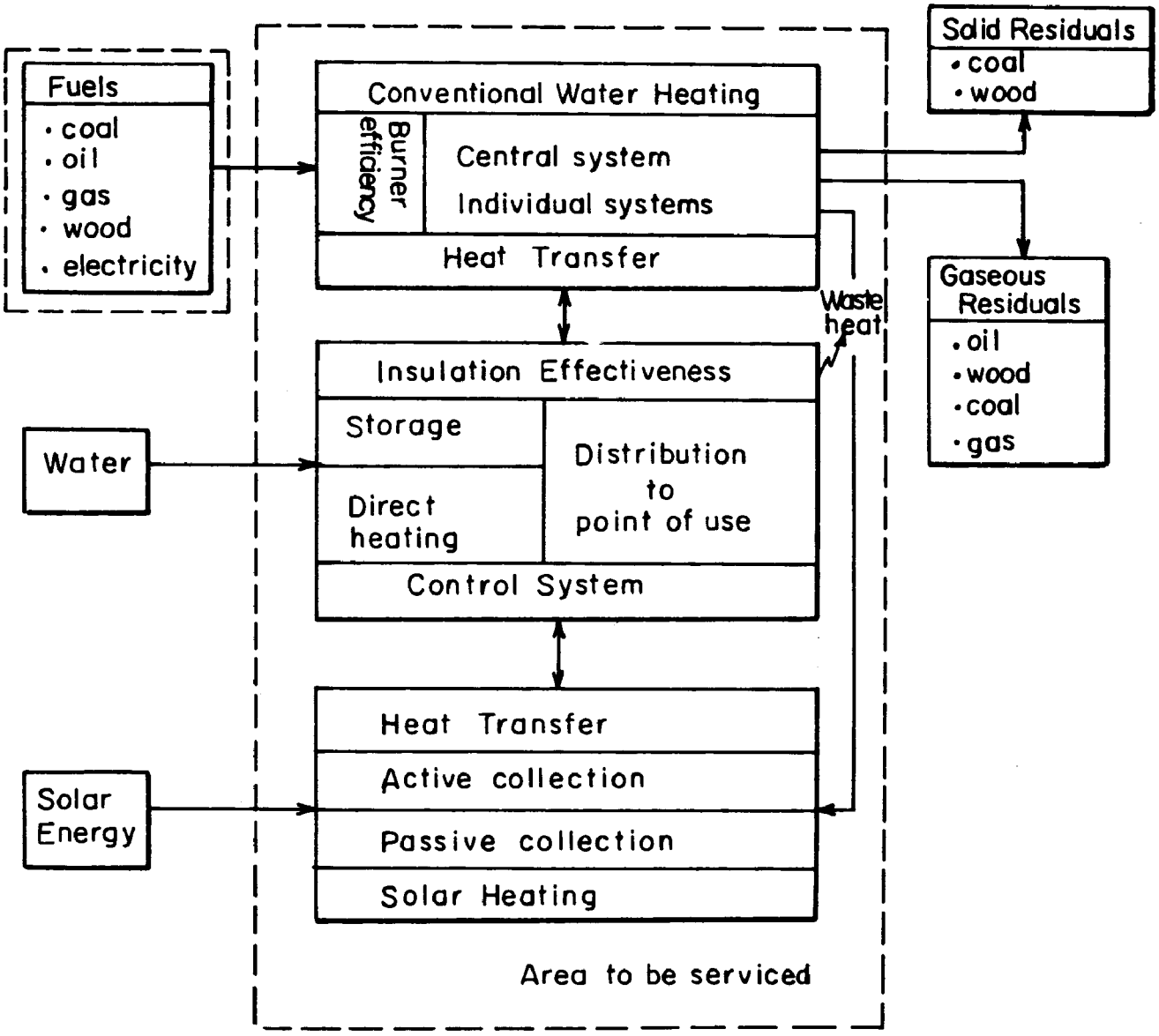

FIGURE A.3. WATER HEATING: MATERIALS, ENERGY, AND RESIDUALS

of the units in the southern region, and 73 percent of the dwellings in the western region of the United States.* Electric heaters are the next most popular, accounting for 15, 24, 39 and 26 percent of occupied dwellings in the northeast, north central, southern and western regions, respectively. Fuel oil is an important energy source for hot water heating only in the northeast, where it is employed in 35 percent of the occupied dwelling units. A 40 gallon gas storage heater currently (i.e., 1977) costs from $130-180 depending upon the quality of insulation and burner. Prices increase about $10 for each 10 gallon increase in storage capacity. Electric storage heaters are $30-40 less than gas units for comparable sizes, but the recommended sizes for similar use are somewhat higher, partly negating the cost difference.

Inputs and Residuals Generation

Table A-7 presents energy and water inputs for the water heating function and gaseous residuals generated per capita per day. Table A-8 presents these data on a per day basis. These data indicate that daily per capita direct energy requirements may range from less than 8,000 up to 30,000 Btu's. Minimum and maximum values for electric heaters are lower than for gas heaters. In part this difference may reflect incompatibilities in the data sources. The range reported for electric heaters is based on data provided by Boston Edison (5). The values for gas heaters are based on estimates by Hittman Associates for different dwelling types and household sizes (6). These data agree closely with the range of regional averages reported by the American Gas Association (7). However, despite the difficulty in comparing data from different sources, there is a real difference in the direct energy consumption between electric and fossil fuel heaters, due primarily to the energy losses involved in the combustion and heat transfer for the fossil fuels. Under current ASHRAE guidelines (8) a gas storage heater designed to supply 80 gallons per day at 140°F and a water temperature rise of 80°F would require about 26,000 Btu/day more than a comparable electric heater (neglecting the substantial conversion losses at the power plant). This is a difference of 43 percent. With a pilot-less ignition the differences would be about 17,000 Btu/day. However, if conversion losses at the electric generating plant are taken into account, then the total energy requirement for electric hot water heating is about 2.2 times as great as for a conventional gas heater. If average fuel costs are considered, the electric heater is about 4.1 times as expensive to operate.† This analysis also suggests another possible reason why energy consumption is higher for gas heaters. Because gas is much less expensive per Btu, manufacturers of gas heaters have had less incentive to improve efficiency than manufacturers of electric heaters, and consumers with gas heaters have had less incentive to minimize hot water use.

---

* Regions are U.S. Census Regions (4).

† Based on national average prices of $\$1.42/10^6$ Btu for gas and $8.29/10^6$ Btu for electricity in 1974, as reported in American Gas Association (7).

TABLE A-7. WATER HEATING ENERGY AND WATER INPUTS AND RESIDUALS GENERATED

(unit/capita/day)

	Energy Input[1] (Btu)			Implied Water Input[2,5] (gal)	Air Emissions (lb)			
	electric	gas	oil		part.	SO_2	NO_x	CO
gas heater - pilot	NA	17,900-29,600	NA	13.1-26.5	$3.2(10^{-4})$[6] $-5.4(10^{-4})$	$1.0(10^{-5})$[6] $-1.7(10^{-5})$	$1.7(10^{-3})$[6] $-2.8(10^{-3})$	$3.4(10^{-4})$[6] $-5.6(10^{-4})$
gas heater - electric ignition[3]	X	13,500-27,200	NA	13.1-26.5	$2.4(10^{-4})$[6] $-4.8(10^{-4})$	$.77(10^{-5})$[6] $-1.5(10^{-5})$	$1.3(10^{-3})$[6] $-2.6(10^{-3})$	$2.6(10^{-4})$[6] $-5.2(10^{-4})$
electric heater	7,900-19,800	NA	NA	9.5-23.7	NA	NA	NA	NA
oil heater	X	NA	13,500-27,200[4]	13.1-26.5	$9.6(10^{-4})$[7] $-19.2(10^{-4})$	.03[7,8] -.07	$1.15(10^{-3})$[7] $-1.3(10^{-3})$	$4.8(10^{-4})$[7] $-9.6(10^{-4})$

1. Direct energy consumption. Energy loss in power plant conversion is ignored.

2. Total of hot water use of household activities. Should not be added to water use of other activities in computing total water use.

3. Calculated from estimate with pilot light by assuming heat loads of 9,600 Btu/day for pilot light.

4. Assumed to operate at same efficiency as gas.

5. Assumed hot water temperature = 140°F, average inlet temperature 60°F, efficiencies: electric = 0.80, gas and oil = 0.65.

6. 1 $ft.^3$ natural gas = 1,050 Btu.

(continued)

TABLE A-7. (CONTINUED)

7. 1 gal fuel oil = 140,000 Btu.

8. Assumed sulphur content 2.5 percent by weight.

Notes: Where data is given only in units/appliance, conversion to per capita values based upon 3.5 persons/dwelling unless otherwise specified by source.
NA = not applicable.
X = data not available.

Sources: Energy: Boston Edison (5).

Hittman Associates (6).

American Gas Association (7).

Hittman Associates (9).

Edison Electric Institute (10).

Air Pollutants: U.S. Environmental Protection Agency (2).

TABLE A-8. WATER HEATING ENERGY AND WATER INPUTS AND RESIDUALS GENERATED

(unit/day)

	Energy Input[1] (Btu)			Implied Water Input[2,5] (gal)	Air Emissions (lb)			
	electric	gas	oil		part.	SO_2	NO_x	CO
gas heater - pilot	NA	39,400-118,400	NA	29.0-106.0	$.71(10^{-3})$[6] $-2.13(10^{-3})$	$2.2(10^{-5})$[6] $-6.6(10^{-5})$	$3.7(10^{-3})$[6] $-11.1(10^{-3})$	$.75(10^{-3})$[6] $-2.25(10^{-3})$
gas heater - electric ignition[3]	X	29,800-108,000	NA	29.0-106.0	$.54(10^{-3})$[6] $-2.00(10^{-3})$	$1.7(10^{-5})$[6] $-6.2(10^{-5})$	$2.8(10^{-3})$[6] $-10.2(10^{-3})$	$.57(10^{-3})$[6] $-2.10(10^{-3})$
electric heater	27,000-69,300	NA	NA	33.2-83.1	NA	NA	NA	NA
oil heater	X	NA	29,800-108,800[4]	29.0-106.0	$2.1(10^{-3})$[7] $-7.7(10^{-3})$	.075[7,8] -.273	$2.50(10^{-3})$[7] $-9.10(10^{-3})$	$1.06(10^{-3})$[7] $-3.90(10^{-3})$

1. Direct energy consumption. Energy loss in power plant conversion is ignored.

2. Total of hot water use of household activities. Should not be added to water use of other activities in computing total water use.

3. Calculated from estimate with pilot light by assuming heat loads of 9,600 Btu/day for pilot light.

4. Assumed to operate at same efficiency as gas.

5. Assumed hot water temperature = 140°F, average inlet temperature 60°F, efficiencies: electric = 0.80, gas and oil = 0.65.

6. 1 $ft.^3$ natural gas = 1,050 Btu.

(continued)

TABLE A-8. (Continued)

7. 1 gal. fuel oil = 140,000 Btu.

8. Assumed sulphur content 2.5 percent by weight.

Notes: NA = not applicable.
S = data not available.

Sources: Energy: Boston Edison (5).
Hittman Associates (6).
American Gas Association (7).
Hittman Associates (9).
Edison Electrict Institute (10).
Air Pollutants: U.S. Environmental Protection Agency (2).

The above discussion also indicates the importance of pilot lights in gas water heating. According to one source a gas pilot utilizes 9,600 Btu/day (9), which is from 8-24 percent of the total consumption, according to Table A-8. Thus substantial energy savings are possible with electric ignition systems.

Some types of electric water heaters feature "quick recovery" heating elements which allow for more rapid heating after the stored water has been depleted. These heaters draw about 4,500 watts as opposed to 2,500 watts for standard heaters, and reportedly increase energy consumption by about 14 percent for typical uses (10). However, the rapid recovery heater would require less storage for any given demand, and the economics for the consumer depend upon the trade-off between the storage costs and the additional energy costs.

The data in Tables A-7 and A-8 do not reflect seasonal and regional differences in energy use. Even if there is no seasonal difference in hot water use, there will be a difference in energy demands due to differences in inlet water temperatures. For example, in the northern part of the country the inlet temperatures might be 40°F in winter and 70°F in summer. For an outlet temperature of 140°F, this would mean a summer heat load 30 percent less than in winter, for the same water use and operating efficiency. Regional differences are also significant. According to data on gas water heater use (Table A-9), average energy use for water heaters was greatest in the South Atlantic region, at 98,100 Btu/heater/day and least in the New England region at 66,300 Btu/heater/day, about a third less.

Residential hot water use can be estimated in two ways. First, the reported energy consumption can be converted to an implied water use by making explicit assumptions as to thermal efficiency and water inlet and outlet temperatures. A second approach is to attempt to estimate the hot water use from individual estimates of the water consumption for each activity and the associated temperature. The former approach has been employed in deriving the estimates in Table A-7 and A-8. These estimates place per capita hot water use at between nine and 27 gallons per day, if a 140°F heater outlet temperature is assumed. Estimates of individual activity use are presented in Table A-10. These are intended to give ranges of normal household use and are based on the available literature. For a 120°F water outlet temperature, a low water use household, which conservatively hand-washes dishes without continuously running water, does all laundry at a laundromat, and uses the minimum values listed, would employ an average of 6.2 gal/capita/day, while a high consuming household, which has a washing machine and automatic dishwasher, and utilizes the maximum values listed would require almost 80 gal/capita/day. The latter figure is undoubtedly unrealistic as an average over an extended period of time, but it indicates the high energy using potential inherent in a modern home equipped with common appliances.

Gaseous residuals are generated from the combustion of fossil fuels for water heating. The residuals indicated in Table A-7 and A-8 have been obtained by applying EPA emission coefficients (2) to the energy use data, and are thus strictly proportional to fuel use for any particular fuel type. Since water heating is responsible for only one-sixth as much energy use as space heating, and relies mostly on natural gas and electricity, the contribution of

TABLE A-9. GAS CONSUMPTION FOR WATER HEATING, 1971

Region	Consumption (Btu/heater/day)
New England (Conn., Maine, Mass., N.H. R.I., Vermont)	66,300
Middle Atlantic (N.J., N.Y., Pa.)	87,100
East North Central (Ill., Ind., Mich., Ohio, Wisc.)	86,800
West North Central (Iowa, Ka., Minn., Mo., Neb., N.D., S.D.)	93,400
South Atlantic (Del., D.C., Fla., Ga., Maryland, N.C., S.C., Va., W.Va.)	98,100
East South Central (Ala., Ky., Miss., Tenn.)	78,600
West South Central (Ark., La., Oklah., Texas)	87,400
Mountain (Ariz., Col., Idaho, Mont., Nev., N.M., Wy.)	71,500
Pacific (Alaska, Cal., Hawaii, Oregon, Washington)	90,100

Source: Adapted from American Gas Association, 1974 Gas Facts, (7).

TABLE A-10. ESTIMATED HOT WATER USE

Activity	Total Water Use (gal)	Temperature	Hot Water Use (gal)	Frequency/ capita/day	Hot Water Use gal/capita/day
		140° outlet temperature			
bath & shower	10-50	100°F	5-25	.5-1.0	2.5-25
dishwasing:					
machine	10-17	140°F	10-17	.25-.5	2.5-8.5
hand	8-14	110°F	5-9	.30-.5	1.5-4.5
laundry:					
hot cycle	25-60	120°F	19-45	0-.5	0-22.5
warm wash/ cool rinse	25-70	100°F wash 60°F rinse	5-12	0-.5	0-6.0
cleaning	2	120°F	1.5	.1-.2	.1-.3
other (personal upkeep, etc.)	1-10	100°F	.5-5	1	.5-5
		120° outlet temperature			
bath & shower	10-50	100°F	6.7-33	.5-1.0	3.3-33
dishwashing:					
machine	10-17	120°F	10-17	.25-.5	2.5-8.5
hand	8-14	110°F	6.7-11.7	.30-.5	2-5.8
laundry:					
hot cycle	25-60	120°F	25-60	0-.5	0-30
warm wash/ cool rinse	25-70	100°F wash 60°F rinse	6.7-16	0-.5	0-8
cleaning	2	120°F	2	.1-.2	.2-.4
other (personal upkeep, etc.)	1-10	100°F	.7-6.7	1	.7-6.7

Notes: Assumed water inlet temperature 60°F. It has been assumed that frequency of use is independent of volume of use.

gaseous residuals from water heating is a relatively small proportion of the total residential contribution.

LIGHTING

Energy used for lighting comprises about 15-20 percent of the lighting/appliance energy load and about one to two percent of the total residential use in a typical single family home (1). An average value for energy used in home lighting is 876 kwh/year, though depending on the household, it could range anywhere from 500-1,750 kwh/year.

The flow chart (Figure A.4) illustrates the energy used and residuals (waste heat) generated by the lighting function as well as measures which can be taken to reduce them.

KITCHEN

The kitchen function includes three major activities; food storage and preparation, dishwashing, and storage and disposal of solid residuals. Flow charts describing the materials consumed and residuals generated and the corresponding energy consumption and residuals flows are presented in Figures A.5 and A.6. The Figures indicate the points at which materials (such as food and other household items and supplies) enter the system and the energy sources; the appliances using these inputs and generating residuals; intermediate points of entry, such as for residuals from other functions; and exits for residuals. Alternative appliances and flows of residuals are indicated.

The following "appliances" and their impact on both resource use and residuals generation* are considered:

<u>Food Storage and Preparation</u>

-refrigerator/freezer (E)
-separate freezer (E)
-stove/oven (E)
-sink (W, WW, LR)

<u>Dishwashing</u>

-sink for manual dishwashing (W, WW, LR)
-automatic dishwasher (W, WW, LR)

---

* E = energy consumption at point of user; W = water use; WW = amount of wastewater; LR = liquid residuals (in wastewater); SR = solid residuals; and GR = gaseous residuals.

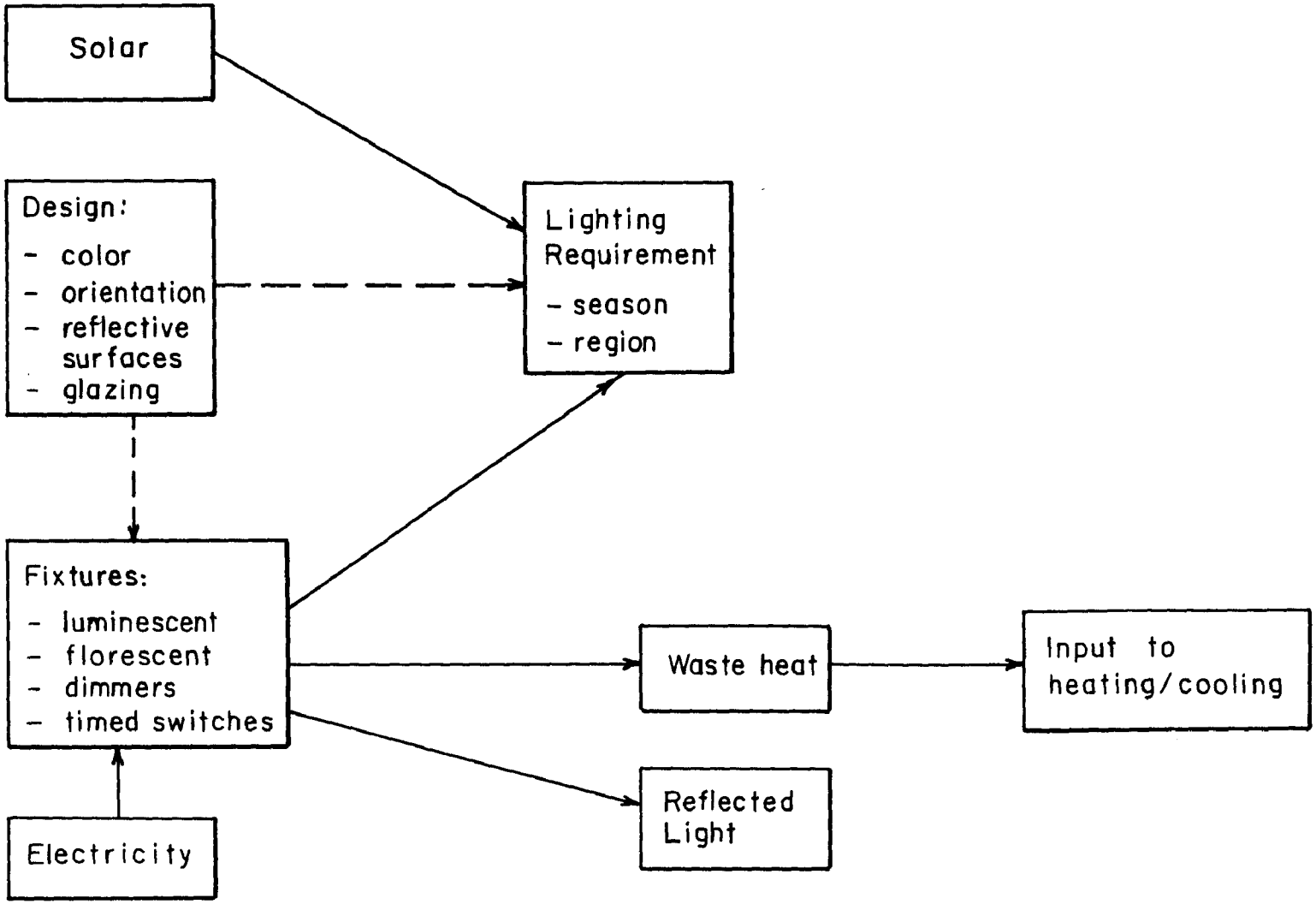

FIGURE A.4. LIGHTING -- ENERGY/RESIDUALS

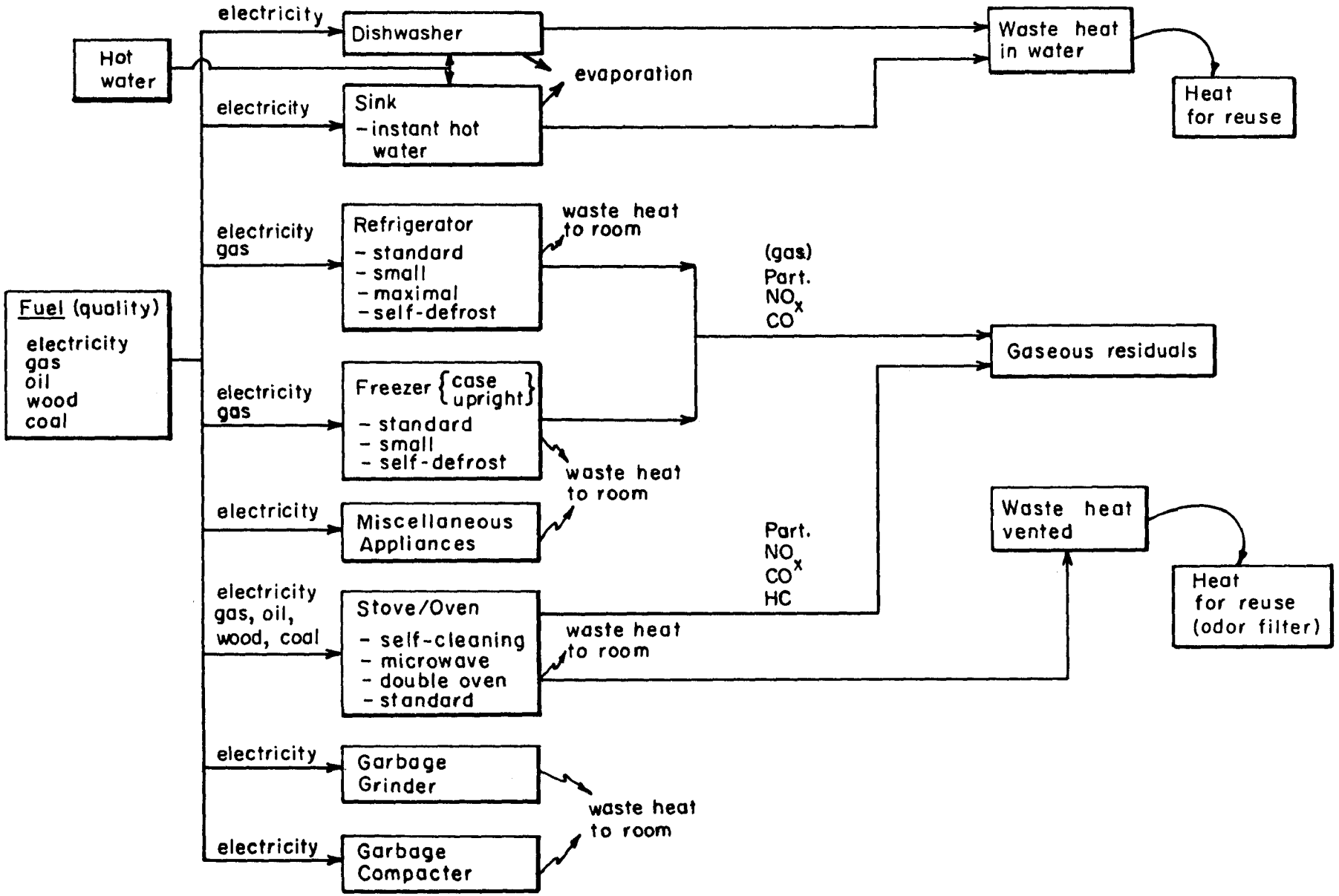

FIGURE A.5. KITCHEN -- ENERGY/RESIDUALS

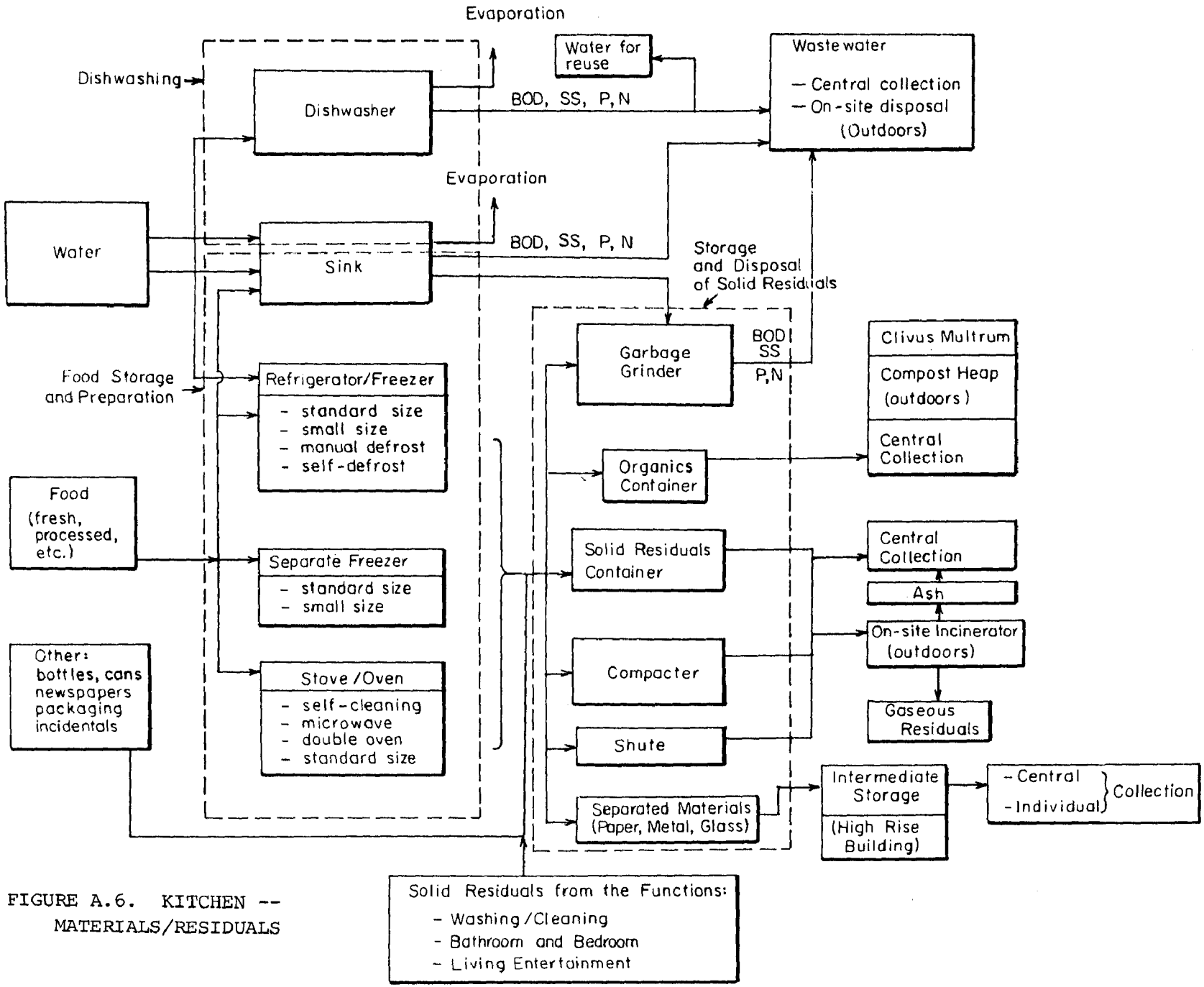

FIGURE A.6. KITCHEN -- MATERIALS/RESIDUALS

Storage and Disposal of Residuals

-garbage grinder (E, W, WW, LR)
-compactors (E, SR)
-chutes (gravity or vacuum) (E, SR)
-storage bins for mixed and/or separated solid residuals (LR).

Materials input to the overall kitchen function include foods, supplies and their packaging, cleaning products, and a variety of incidentals, as well as the residuals of other functions -- such as newspapers, other paper products, cans, bottles and so forth -- which are disposed of or stored for disposal in the kitchen. Energy input is required in the form of electricity for small appliances; electricity, gas, wood or other fuels for stove and oven; electricity or gas for refrigerator and freezer, and heated water for dishwashing or other purposes. Water itself is another material input to the system, particularly for food preparation and dishwashing.

Residuals are made up of liquid residuals which include biochemical oxygen demand, suspended solids, phosphorous and nitrogen; some gaseous residuals from gas appliances, and indirectly, from hot water heating; and organic and other solid residuals discarded from the preparation of food or contributed by other functions. The gaseous residuals generated by appliances are negligible and those caused by hot water heating are considered in the water heating function.

The interconnections with other systems are most obvious at the points where solid materials discarded from other household functions enter the kitchen and are "processed" (collected, compacted, stored) to be disposed of as residuals, and where the kitchen produces residuals such as organics that become inputs to another system such as the outdoor function where disposal can take place in septic tanks, composting or on-site incineration.

Not all appliances associated with kitchen activities are present in every household. Their availability, size, and usage depends on various user characteristics and patterns of behavior which are discussed below. Points at which the user can have significant influence over the materials consumed or residuals generated by the activities and associated appliances are marked in the flow charts.

Energy Consumption and Residuals Generation

The ranges of resource consumption and residuals generation in the kitchen, identified in the literature or derived from various sources, are summarized in Tables A-11 through A-13. Levels of saturation as sampled in 1970 and projected for 1990 indicate the importance of each appliance in the household.

Energy Consumption--

The consumption and operating characteristics of refrigerators, freezers, ranges, dishwashers, and garbage grinders were investigated (see Table A-11, columns 1 and 2). The probable distribution of other electrical appliances in households with different energy consumption levels are indicated in Table A-14. All the yearly values of consumption (kwh/yr) are based on our literature review.

TABLE A-11. APPLIANCES IN KITCHEN AND THEIR RANGE OF RESOURCE USE AND RESIDUAL GENERATION

		Energy* kwh/yr	Energy* 10^3 Btu/cap/day	Water† and Wastewater (gpcd)	LR	SR	% Saturation‡ 1970	% Saturation‡ 1990
Refrigerator/ Freezer	Frost Free	750-1,790	2.0-4.8	-	-	-	98**	120
	Manual	460- 728	1.2-1.9					
Separate Freezer	Frost Free	1,761-1,985	4.7-5.3	-	-	-	28 (21)	46
	Manual	1.195-1,320	3.19-3.5					
Range (stove/oven)		1,142-1,550 (2,300-3,100)††	3.05-4.14	-	-	-	41 (28)	75
Sink		-	-	2.7-18.0‡‡ (9.9)	Table 15	-	>100	>100
Dishwashing	Automatic	322-380	.86-1.02	1.1-6.0		-	19 (34)	80
	Manual	-	-	1.1-4.6				
Garbage Grinder		9.9-30	.03-.05	.8-4.0		Table 16		
Storage Bins		-	-	-	-			
Refuse Compactor***		60						

* Assumption of 3.5 people per household for per capita energy consumption figure; energy figures neglect conversion loss at power plant; energy use for hot water heating is accounted for in Water Heating.

† Evaporative losses are neglected; per capita figures are based on the family sizes encountered in sampling programs of the authors (see "Bathroom and Bedroom").

(continued)

TABLE A-11 (CONTINUED)

‡ Figures are based on Project Independence (local and regional differences are documented in the literature); the figures in parentheses indicate the figures for Southern California.

** 40 percent of the units in operation today, and 70 percent of the ones in operation in 1990 are of the frost free feature.

†† The figures in parentheses give the consumption figures of gas ranges.

‡‡ 18.0 and 9.9 gpcd include bathroom sinks.

*** Only one source of reference.

TABLE A-12. CHARACTERISTICS OF LIQUID RESIDUALS FROM KITCHEN (LBS/CAP/DAY)

	BOD_5	SS	TN	TP
Sink	.018 - .023[3]	.005[1] - .009	.001 - .002[3]	.001
Dishwasher	.001[1] - .028[2]	.0002[1] - .012[2]	.001[2]	.001 - .002[2]
Garbage Grinder*	.024 - .068 (.021 - .10)	.035 - .096 (.03 - .14)	.001 - .002	.00007[1] - .0002

* It is reported that on the average .5 lb/cap/day of garbage results in .068 lb BOD_5/cap/day and .096 lb (dry) SS/cap/day; assuming linear relations in the absence of data, the range based on the range of garbage disposed (Table A-13) would results in approximately .021-.1 lb BOD_5/cap/day and .03-.14 lb SS/cap/day, respectively. (See K. Ligman, et al., (11)).

1. the low values are reported in the same study as the low flow values (Bennett, E. R., et al., (12)).

2. the high values are reported in the same study as the high flow values (Witt, M.D. (13)).

3. high value is reported in the study of low flow value (Bennett, E. R., et al., (12)).

TABLE A-13. RANGES OF GENERATION RATES FOR EACH COMPONENT OF RESIDENTIAL SOLID RESIDUALS (kg/cap/day)

		Organics	Paper	Glass	Metals	Plastics	Rubber Leather	Textiles	Miscel-laneous	Total
Combined Storage and Disposal	L	.08	.09	.06	.06	.01	.005	.005	.002	.31
	H	.37	.44	.29	.14	.09	.04	.05	.02	1.44
Separated Stor-age and Disposal	L	.09	.08	.06	.06	.01	.005	.005	.002	.31
	H	.43	.4	.29	.14	.09	.04	.05	.02	1.44
Organics Disposed of by Grinder	L	.02	.08	.06	.06	.01	.005	.005	.002	.24
	H	.11	.4	.29	.14	.09	.04	.05	.02	1.13

* See Appendix D for derivation of figures (L = low; H = high)

† The totals were calculated under the assumption of independence of the components leading to extremely high and low values.

TABLE A-14. APPLIANCES IN KITCHEN FOR HYPOTHETICAL LOW, MEDIUM AND HIGH ENERGY HOUSEHOLDS.* (BTU IN MILLIONS/YEAR)

Low	Btu	Medium	Btu	High	Btu
Range	4.0	Range	4.3	Range (self cleaning)	4.8
Refrigerator (manual)	2.5	Refrigerator/ Freezer	4.0	Refrigerator/ Freezer	4.4
Coffeemaker	.5	Coffeemaker	.5	Freezer	5.0
Toaster	.1	Frying Pan	.3	Dishwasher	1.2
		Toaster	.1	Coffeemaker	.5
				Frying Pan	.3
				Toaster-Oven	.3
				Broiler	.3
				Trash Compacter	.2
				Toaster	.1

* The Btu-values are typical values for these appliances as provided by manufacturers.

Freezers, particularly the frost-free version, are the most energy-intensive appliances in the kitchen. The saturation figures (Table A-11) suggest that there are not many in use because they are expensive to buy and run. The increasing size of refrigerator/freezer combinations will limit the need for an additional freezer. Another limiting factor is the lack of space in apartment buildings to accommodate a freezer.

The demand for a separate freezer could arise from such factors as the scarcity of certain foods (i.e., meats), changing food prices, and the remoteness of a household from the store and the resulting convenience of shopping less frequently.

Manual defrost freezers, frost-free refrigerator/freezer combinations, and stove and oven units constitute a group of similarly intensive energy appliances. Manual refrigerator/freezer units and dishwashers consume significantly less energy.

Frost-free refrigerators may consume as much as 30-60 percent more energy than manual units. Nevertheless, the frost-free feature is demanded by customers; 70 percent of the working units are expected to be frost-free designs in 1990. Currently 40 percent (14) of the units are of this type. The lower kwh/year figure for manual units, however, may be somewhat unrealistic; energy consumption rises as soon as ice begins to accumulate within the unit, so that irregular defrosting could lead to an energy consumption as high as that of a frost-free unit. The time and trouble that defrosting takes is its main drawback at the sales counter. Other factors influencing the choice of frost-free units is their noise level and the fact that some sizes of freezers are only available in frost-free versions.

Side-by-side refrigerator/freezer combinations are inefficient; they consume approximately 18 percent (15) more electricity. In an area with an electricity rate of 6¢/kwh, the average top-freezer would cost $96.76/year whereas the side-by-side model would cost $116.64/year, a difference of almost $20.

Gas refrigeration units are no longer sold in this country; however, some units are still in operation. In 1968, there were four million gas units, compared to 57.6 million electric units. A gas refrigerator uses an equivalent of 4,102 kwh/year compared to 1,270 kwh/year for electric units (16) (neglecting the conversion losses at the power plant).

The average size of refrigerators increased by about one-third of a cu ft per year during the 1960's. Recently the rate of increase has dropped to one-sixth of a cu ft per year because of the limits imposed by current building standards. In 1970 the average size was 13 cu ft (14), and it is now increasing to 14 cu ft.

The saturation level of ranges (stove and oven combined, for our purposes) has been above 90 percent in the past 20 years; currently it is 97 percent. Both gas and electric ranges are marketed, but sales of electric ranges began to outnumber sales of gas ranges during the mid-1960's, even though gas ranges are cheaper to buy and cheaper to run (in terms of cost of energy consumption).

Now in the 1970's the number of electric units in operation is actually larger than the number of gas units. Only on the west coast is the number of gas ranges sold and in operation greater than the number of electric ranges.

The various sizes of gas and electric ranges account, along with cooking habits, for variation of energy consumption by these appliances. The American Gas Association, for example, makes the distinction between house ranges and apartment ranges. House ranges are estimated to consume on the average 10.5 million But/yr (3,080 kwh/yr) compared to 8.8 million Btu/yr (2,340 kwh/yr) for apartment ranges.

Dishwashers use eight to nine percent of the central hot water supply in the home. In the future "virtually all new housing units will have dishwashers," according to Project Independence's estimate. Thus most of the energy consumed by the operation of dishwashers is attributable to hot water demand. Up to 16 gallons of hot water of the central hot water system (about 120°F-140°F) are used per cycle. In models with "sani-wash" features the water is further heated up to 150°F-155°F. The heating/drying cycle is the second largest energy consuming factor. Eliminating it would save about 30 percent of energy used in a dishwasher (14).

Garbage grinders are quite unimportant in terms of their energy consumption, but are included due to their impact on other media.

The typical range and variation in energy consumption implies certain behavioral patterns and other socio-economic characteristics. To help interpret the implications of the values in Table A-11, energy consumption by dishwashers and garbage grinders was calculated, based on various user patterns (see Table A-15). These calculations show that the lower range of the values of Table A-11 is quite acceptable, while the upper range values are low for the dishwasher, but high for the garbage grinder, given our assumption of user patterns. The scheme of calculations should enable the interested person to compute possible ranges of energy consumption for specific behavioral patterns.

Water Consumption and Wastewater and Liquid Residuals Generation--

Sinks, dishwashers, and garbage grinders are discussed in this section. Neglecting losses due to evaporation or food preparation, the wastewater generated is assumed equal to the amount of water consumed at these points before evaluation of conservation measures. All water consumption figures are based on references discussed in more detail in the section on the bathroom (see below). Many of the values seem to be reasonable and are consistent among the references, while others are less certain. Consider, for example, the kitchen sink (exclusive of dishwashing); Laak (17) assumes three gallons of water and a generation of 0.001 lbs BOD_5 per event of food preparation. At two meals per day, on the average, and assuming a family of 3.5 people, the water consumption would be about 1.71 gpcd. Given an additional one gallon per handwashing event* the daily consumption of the sink would be about 2.3 gpcd assuming that the person who prepares the food washes their hands every time.

---

* See discussion on "Bathroom".

TABLE A-15. TYPICAL VALUES OF ENERGY CONSUMPTION OF KITCHEN APPLIANCES

Appliance	Heating and/or Driving Element	Heating* of Water	Operation Times and Consumption: Washing Cycle	Operation Times and Consumption: Drying Cylce	Total kwh per use	Use per day	10^3 Btu/day	Persons per Household	10^3 Btu cap/day
Dishwasher -65 min. cycle 39 min. washing and 26 min. drying cycle -14 gallons - 1/4 hp pump	750 W (heating)	for 155°F: .49 kwh	.11 kwh	.31 kwh	.91†	1	3.10	2 3.5	1.55 0.89
						1.5	4.65	4 5	1.16 0.93
						2	6.2	6 7	1.03 0.89
		for 150°F: .33 kwh	.11 kwh	.31 kwh	.75‡	1	2.6	3.5	.7
		for 140°F: 0	.11 kwh	.31 kwh	.44**	1	1.5	3.5	.43
Garbage Grinder	1/2 hp		2 min.		.012	1 2	.04 .08	3.5 6	.012 .01
	1/3 hp		2 min.		.008	1 2	.03 .06	3.5 6	.01 .01

* Assumed that water from central water heating has temperature of 140°F, and that water has to be heated up only once to desired °F: 1 Btu x ΔT x gallon water x 8.

† Use of open door drying would reduce energy consumption by 30 percent.

(continued)

TABLE A-15. (continued)

‡ Use of open door drying would reduce energy consumption by 41 percent

** Use of open door drying would reduce energy consumption by 70 percent.

If handwashing accounts for a total of 0.011 lbs BOD_5/cap/day* and, we assume that 0.008 lbs of the 0.011 are generated at the kitchen sink the total does not approach the lower bound of the BOD from the kitchen sink. If, however, it is assumed that additional food pieces enter the sink exclusive of the dishwashing operation, we are easily within the range of the given wastewater characteristics, but would have problems in justifying the lower water use figures.

The lower value for the water use with an automatic dishwasher is based on a frequency of use of 0.6/day for 3.8 persons/family and seven gallons per dishwasher use (12). This value is very low due to the very conservative use patterns of the families sampled.† The low energy value of Table A-11 implies four gpcd (14 gallons per day/3.5 people).‡ Therefore it seems advisable to select the low value only in cases where very low user frequencies are expected. Also the lower bound of the BOD_5 values is quite high given Laak's value of 0.01 gm BOD_5/gallon. The low values for both quantity and quality (BOD_5) are based on the same sample (Bennett, et al.) (12); Laak's (17) value is derived from a situation unassessable for us.**

Solid Residuals Generation--

The kitchen function includes the activity "storage and disposal" of solid residuals generated in all indoors household functions. In addition to the residuals from activities in the kitchen, solid residuals from other functions are accounted for: lint, inorganics from sweeping the floor, vacuuming, etc. (washing/cleaning); paper, glass, plastics, textile, rubber, leather products and other incidentals (bathroom and bedroom), paper, bottles, cans and other miscellaneous incidentals, such as ashes from fireplaces (living/entertainment); and ash residuals from individual heating systems fired with coal and wood (space heating), respectively.

The values of Table A-13 (as derived in Appendix D) imply an average household of 3.2 persons (average U.S. family size) because the per capita generation data (used as multiplier for the percentage ranges of each component) was derived from a nationwide material flow balance. This is important for estimating the generation of solid residuals per household.

---

* See discussion on "Bathroom".

† A survey by K.S. Watson (1963) showed average uses/day of 1.2-1.78 for families of about four people at a use of 7-12.5 gallons/cycle (18).

‡ It should be pointed out very clearly that the energy figures are based on reported average consumption figures scaled down to per capita figures while the water use and liquid residuals generation figures are based on averages of a small sample of monitored households.

** All values should be accepted for what they are: ranges based on certain conditions. Low or high values can only be reached under certain combinations of conditions, which are discussed below. But it should be understood that the ranges are not absolute limits; they reflect literature values based on small samples, not all possible lower and upper bounds.

A study of three collection routes in low income areas of Cincinnati (19) evaluated the influence of family sizes on the per capita collection rate for different types of housing. Single-family houses showed an average weekly per capita generation rate* of 9-10 lbs (1.29 lbs/cap/day) for six or more people, while an averge of 25 lbs (3.57 lbs/cap/day) for one person.† Multi-family dwellings showed an average weekly per capita generation rate of about 8-10 lbs (1.25 lbs/cap/day) for ten or more people compared to the average of 22 lbs for three to four people per unit (3.14 lbs/cap/day).‡ In apartment houses the generation rate was consistently about seven lbs/person/week (1.00 lb/cap/day) for 17-126 people per structure.

According to the average composition data (presented in Table D-1 of Appendix D), paper constituted the single most important component (between 34.4 and 40.8 percent), followed by food (between 22.7 and 27.2 percent). The amount of paper waste such as newspapers does not increase linearly with family size; one subscription usually suffices no matter what the family size. In a small household, printed matter can supply relatively more of the total waste. Other paper wastes appear correlated with food wastes: the higher the paper the lower the food content of residuals, presumably because processed foods, which are heavily packaged, are more completely consumed but produce residuals from the packaging. Unfortunately, the lack of detailed socio-economic description of the routes studied does not allow a definitive interpretation of these results. It is only known that the route with the lowest paper composition had the highest average number of persons per single family house, but the lowest number of contributors per multi-family structure. If the ratio of a single family to multi-family structure is large on that route, then the presence of large families should reduce the paper component according to the above discussion. Quimby (20) has estimated that in 1969, 17 percent of per capita paper consumption is accounted for by newspapers, resulting in a total of about 98 lbs newspaper per person/year or 0.27 lb/cap/day. He also estimated that in metropolitan areas and among average and higher income groups it is reasonable to posit an average household consumption of 8-10 lbs of newspapers per week, which is about 0.37 lb/cap/day for a family size of 3.5, a number comparable to the national average of 0.27 lb/cap/day. In the materials balance (21) for commercial and residential solid wastes, roughly 50 percent of the paper component is comprised of containers and packaging, 25 percent of newspapers, books, and magazines, and 25 percent of other products. Assuming that in residential solid residuals each of the components contributes one-third, a 0.37 lb/cap/day newspaper generation rate could therefore result in 1.07 lbs/cap/day of paper products. This figure is still a bit high compared to the estimate of 0.88 in Table A-13. If paper makes up about 40 percent of the total, a per capita generation rate of 2.68 lbs/cap/day would result. Quimby (20) estimates that the newspaper weight of 0.37 lbs/cap/day (see above) is approximately 15 percent or

---

* We assume here that the collection rate is equal to the generation rate; Davidson's report, however, does not address this question at all.

† Family sizes ranged from 1-4 to 1-11 on the different routes.

‡ People per structure were between 4 and 21, 2 and 26, and 3 and 14 on the three routes.

more of the weight of residuals generated in residential buildings; this would yield an upper limit of 2.47 lbs/cap/day. If the newspaper and magazine component is 50 percent of the paper component in metropolitan and middle to high income areas, the 0.74 lb/cap/day approaches the values of Table A-13; and if the paper component is about 40 percent of the total weight, a reasonable total generation rate of about 1.7 lbs/cap/day results.

The generation of organics is extremely high in Table A-13. The implication appears to be that much fresh unprocessed fruit, vegetables, and meat are used in food preparation. This should yield a reduced rate of packaged material. The few available data show that high garbage residuals are compensated for by low paper residuals.

In general, the range of values of each category seem to reflect reasonable lower and upper bounds; but the choice of categories whose lower or upper bounds, respectively, can be added up for low or high total values, has to be made very carefully.

WASHING AND CLEANING

The washing and cleaning function is comprised of two major activity types: clothes washing and drying, and room cleaning. Figures A.7 and A.8 depict the flow of energy and materials through the activities and the associated appliances. Clothes washing and drying includes hand and machine washing, drying by natural evaporation or by electric or gas heat, and ironing. Energy inputs are required in the form of hot water for washing, electricity for the washing machine motor and for the dryer motor and blower, electricity for resistance heating in the electric dryer and iron, and gas for a gas heated dryer. Major materials inputs (aside from the clothes themselves) are the water and soaps, detergents and other cleaning materials. Wastewater is generated from the washing machine, and contains quantities of BOD, suspended solids and phosphorus. Solid residuals include lint from the filters in the dryer and washer, and detergent packaging materials. These are considered in the solid residuals storage and disposal activity of the kitchen function. Small amounts of air pollutants are generated by the combustion of gas in the dryer, by the lint picked up in the dryer exhaust, and indirectly by the combustion of fuel for hot water. The first two sources of air pollution are considered insignificant and are not dealt with here. The third source is dealt with under the function of hot water heating. The clothes washing and drying activity may account for 2 to 3 percent (Hittman Associates (9)) of the direct household energy use and 4 to 27 percent of the household water consumption (Witt, M.D. (13)).

Room cleaning is responsible for a much smaller proportion of total water and energy requirements. The principal appliances associated with this activity are vacuum cleaners and electric floor washers and polishers, which together account for about one-tenth of one percent of direct household energy input.* Water use for floor washing and cleaning activities accounts for 1 to

---

* Meta estimate.

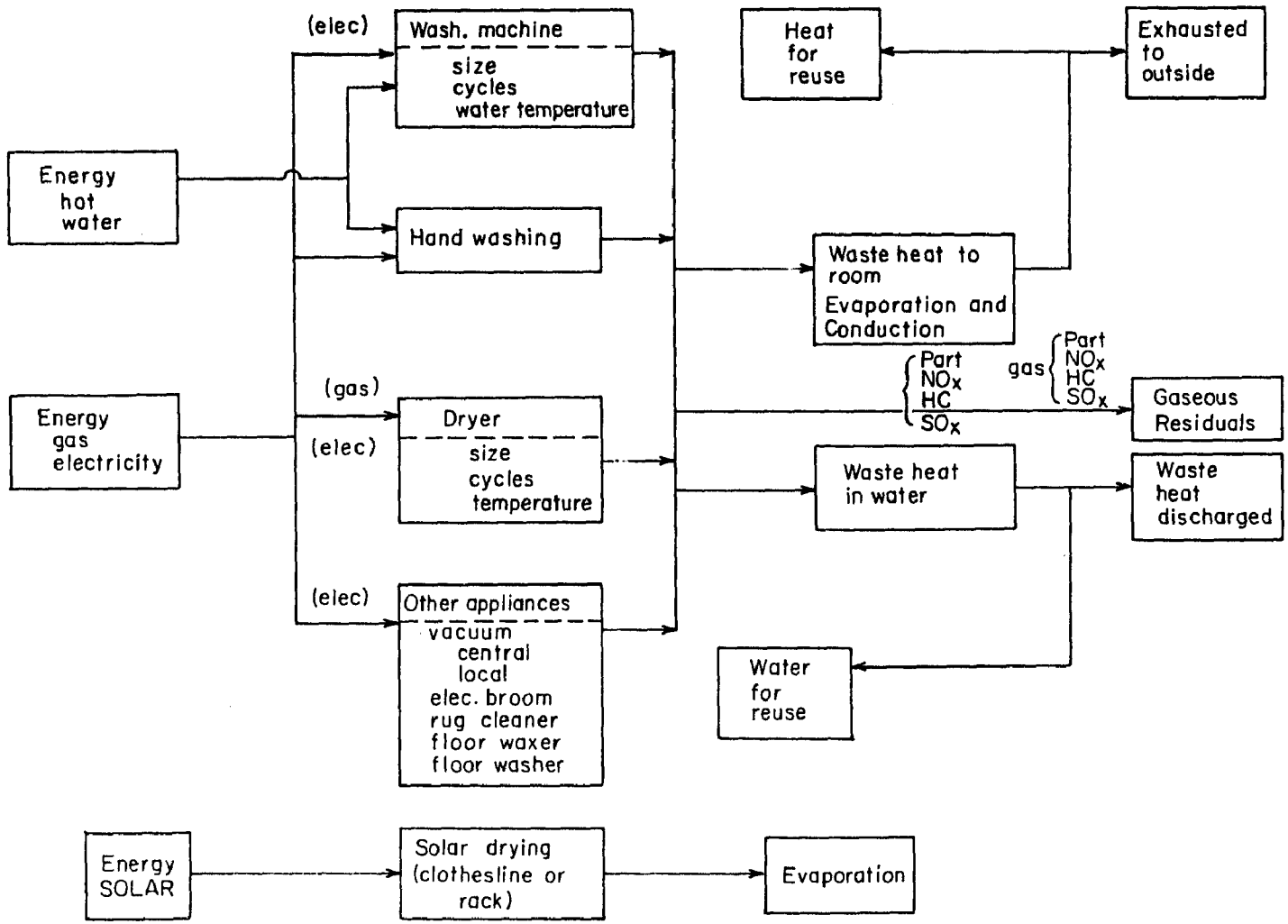

FIGURE A.7

WASHING AND CLEANING--ENERGY/RESIDUAL

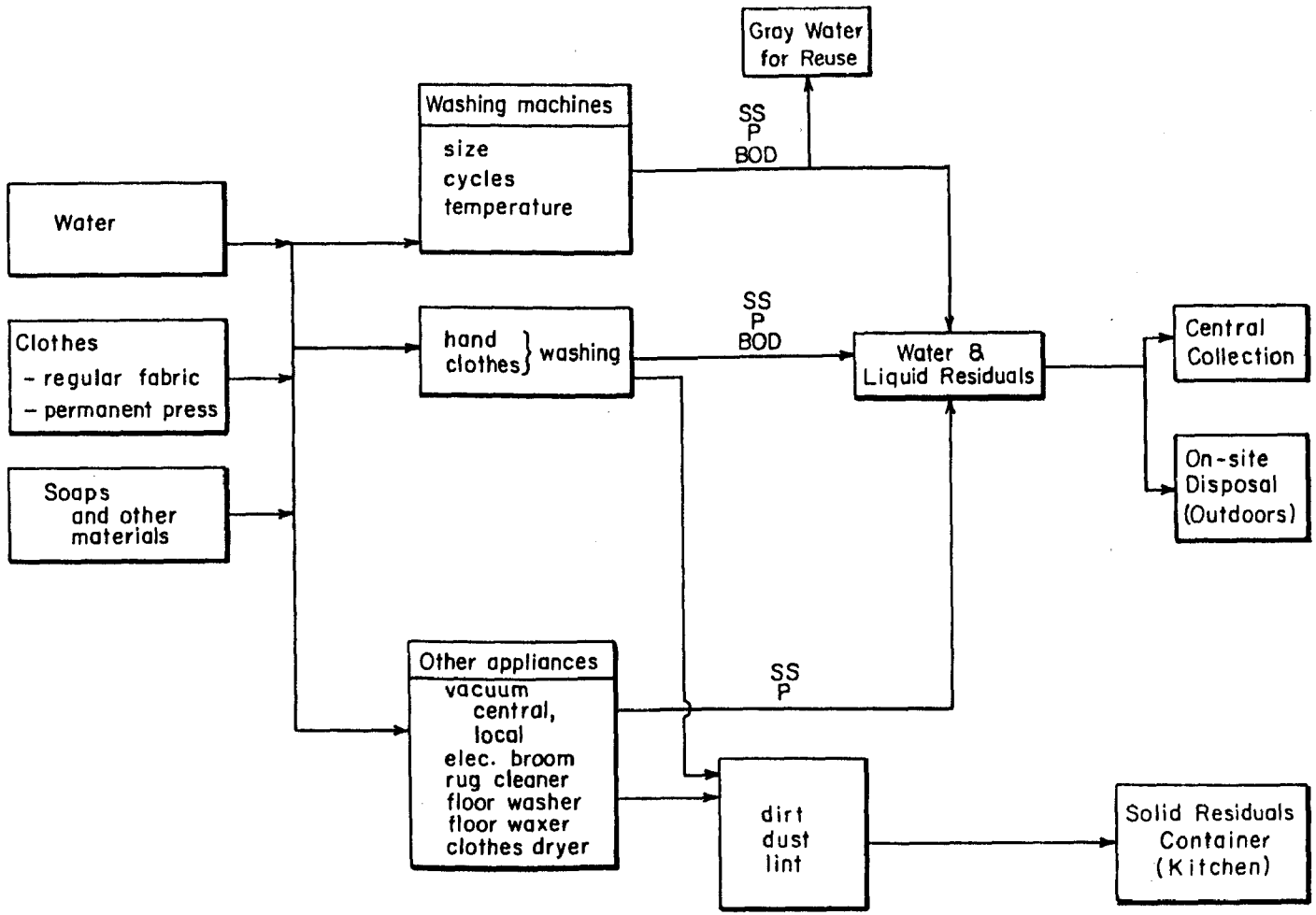

FIGURE A.8

WASHING AND CLEANING--MATERIALS/RESIDUAL

5 percent of total household requirements (Witt, M.D. (13)).

Clothes Washing and Drying Activity

Table A-16 lists ranges of average energy and water consumption and residuals generation by appliances used for clothes washing and drying, expressed in units of consumption or residuals generation per capita per day. Table A-17 presents similar information on a per cycle or per use basis. These data, combined with explicit assumptions as to frequency of use and household size, will enable the user to compute daily, monthly, or annual figures appropriate for particular situations.

Clothes Washers--

In 1970 approximately 60 percent of the occupied dwelling units in the United States had automatic clothes washers, and roughly another 10 percent had non-automatic washers (4). An automatic washing machine is considered to be a "standard" appliance for most new single family homes, but traditionally these appliances have not been common in individual units of multi-family structures. Washing machines may be provided in common areas of apartments, and the advent of compact washing machines has made this appliance more practical for small apartments, although the capacities of the devices are limited. In dwellings which do not have washing machines a large part of the water consumption and residuals associated with clothes washing is "exported" to laundromats and commercial laundries. Only for very low income families, and in isolated rural areas, would the bulk of clothes washing be done by hand. Thus it is generally not appropriate to compare the water use of families with clothes washing machines to those without unless the outside use is taken into account. In this discussion we consider only households with their own washing machines or with access to washing machines within the building.

Washing machines are available in a range of sizes and the more recently produced units feature a variety of control characteristics which enable the users to tune the operation to their specific needs. A variety of combinations of water level, operating cycles and wash and rinse temperatures can be selected, depending upon the types of fabrics and loads involved. Generally speaking, the larger number of options is favorable to conservation of water and energy if the options are used properly. However, the initial cost of washing machines, ($250-330/unit (27)) increases with the number of options.

As indicated in Table A-16, the direct electrical energy use of the washing machine is very small, but the washing machine does contribute significantly to the household's water consumption and to the generation of BOD and suspended solids. It is not a significant source of nitrogen in wastewater, but is an important source of phosphorus if phosphorus is present in the detergents. Washing machine effluent contains about 16 percent of the household's BOD generation, 12 percent of the suspended solids and up to 50 percent of the phosphorus where high phosphate detergents are employed.*

---

* Meta's estimates based on averages from studies cited in Table A-16.

TABLE A-16. INPUTS AND RESIDUAL OUTPUTS

WASHING AND CLEANING FUNCTION: CLOTHES WASHING AND DRYING

(Units/capita/day)

	Energy Use[1] (Btu)		Water Use	Wastewater	BOD_5	Suspended Solids	Total Nitrogen	Total Phosphorous
	Electric	Gas	(gal.)	(gal.)	(lb)	(lb)	(lb)	(lb)
Washing Machine								
-automatic	235-274	NA	4.2-18.1[5]	4.2-18.1[2]	.019-.033	.007-.024	0.0-.002	.0001-.005
-non-automatic	203	NA	x	x	x	x	x	x
Dryer								
-gas (w. pilot)	178-342	4,697-9,393[3]	NA	NA	NA	NA	NA	NA
-gas (w/o pilot)	178[4]-342	3,131-6,027	NA	NA	NA	NA	NA	NA
-electric	2,645-5,975	NA	NA	NA	NA	NA	NA	NA
Iron (electric)	160-400	NA	NA	NA	NA	NA	NA	NA

1. Does not include hot water energy. Electric energy is only Btu's used at home, not energy used to generate electricity.

2. Evaporative losses ignored.

3. Pilot light consumes about 880 Btu/day.

4. Does not include electrical energy for ignition.

(continued)

TABLE A-16. (Continued)

5. Water use data for washing machines is based upon a small sample of actual users, while electric use data was taken from annual averages reported in the sources listed below. As a result the ranges for the two categories may not be completely consistent.

Notes: Where original data is based upon total household use a conversion factor of 3.5 people/household is assumed, except where otherwise specified in source.
NA = not applicable.
X = data unavailable.

Sources: Energy: Hittman Associates (9).
Edison Electric Institute (10).
Federal Energy Administation (14).
Association of Home Appliance Manufacturers (22).
Citizen's Advisory Committee on Environmental Quality (23).
Water: Ligman, K., et al., (11).
Siegrist, R., et al., (24).
Bennett, E.R., and K. Linstedt (25).
Cohen, S. and H. Wallman (26).

TABLE A-17. INPUTS AND RESIDUAL OUTPUTS PER USE

WASHING AND CLEANING FUNCTION: CLOTHES WASHING AND DRYING

	Energy Use[1] (Btu/event)		Water Use	Wastewater	BOD_5	Suspended Solids	Total Nitrogen	Total Phosphorous
	Electric	Gas	(gal/event)	(gal/event)	(lb/event)	(lb/event)	(lb/event)	(lb/event)
Washing Machine								
-automatic	887-990	NA	25-71[5]	25-71[2]	.062-.070	.025-.051	.00-.006	.001-.015
-non-automatic	552	NA	x	x	x	x	x	x
Dryer								
-gas (w. pilot)	682-935	12,000-16,500[3]	NA	NA	NA	NA	NA	NA
-gas (w/o pilot)	682-935[4]	12,000-16,500	NA	NA	NA	NA	NA	NA
-electric	9,898-13,652	NA	NA	NA	NA	NA	NA	NA
Iron (electric)	1,867	NA	NA	NA	NA	NA	NA	NA

1. Hot water not included. Btu's used to generate electricity not included.

2. Evaporative losses ignored.

3. Pilot light consumes about 880 Btu/day.

4. Does not include electrical energy for ignition.

5. Water use data for washing machines is based upon a small sample of actual users, while electric use data was taken from annual averages reported in the sources listed below. As a result the ranges for the two categories may not be completely consistent.

(continued)

TABLE A-17. (Continued)

Notes: Where original data is based upon total household use a conversion factor of 3.5 people/household is assumed, except where otherwise specified in source.
NA = not applicable.
X = data unavailable.

Sources: Energy: Hittman Associates (9).
Edison Electric Institute (10).
Federal Energy Administation (14).
Association of Home Appliance Manufacturers (22).
Citizen's Advisory Committee on Environmental Quality (23).
Water: Ligman, K., et al., (11).
Siegrist, R., et al., (24).
Bennett, E.R., and K. Linstedt (25).
Cohen, S. and H. Wallman (26).

Clothes Dryer--

In homes which have dryers, these appliances account for about 2 percent of the household energy use (Hittman Associates (9)). While the majority of homes which have washing machines also have dryers, a significant number do not. While about 70 percent of occupied dwelling units had an automatic or non-automatic washing machine in 1970, the percentage with dryers ranged from 33 to 53, dependent upon the region of the country (4). Among households with dryers, electric units were preferred by a ratio of 2 to 1 over gas dryers.

A standard home size dryer unit sells for from $170 to $220 for an electric unit and $180 to $250 for a gas unit. It employs a 1/4 - 1/3 hp electric motor to operate the tumbler and blower and uses a 4,000-5,000 watt electric heater or 1,000-25,000 Btu/hour gas burner to generate the heat needed for evaporation. Air is heated to about 200°F and leaves at 90°F. Operating times for dryers vary with the size of load and type of fabric. Average times are reported to be 0.6 hours for a full load of permanent press fabrics and 0.8 hours for a full load of regular fabrics.

In direct energy use the electric dryer is slightly more efficient than the gas unit. For a 35 minute cycle the electric unit would utilize about 9,900 Btu, the gas about 12,700 (Hittman Associates (9)). However, when conversion at the generating plant is taken into account the electric unit is responsible for 2.2 times as much energy consumption as the gas dryer. Also, under existing pricing structures the electric dryer is from 5 to 6 times as expensive to operate as a gas dryer (28).

Iron--

The iron utilizes about the same per capita amount of energy as the clothes washer, although the range of reported values is greater (Table A-16). The wider range probably reflects the impacts of personal styles and the influence of permanent press fabrics.

Floor Cleaning

Floor cleaning includes sweeping, washing, waxing, and vacuuming. Water use reported for this activity ranges from 0.45 to 2.05 gpcd (13). This reflects household cleaning habits and cleaning methods. About 1 gallon is employed to clean a full size room; thus water use for this activity will increase somewhat with total floor area or number of rooms. Water used for cleaning is usually taken from the sinks or tub and is thus included in the values for kitchen and bathroom sinks and tub, and is reported elsewhere in the report. The values listed here should not be added in with the sink and tub values in aggregating household water use. For the same reason values for wastewater and waterborne residuals are not reported separately here.

Solid wastes are generated from the dirt and dust collected by sweeping and vacuuming and from detergent packaging. These are included in the solid waste storage and disposal activity for the kitchen function.

Principal energy using appliances are the vacuum cleaner and floor washer and polisher. Average per capita and per event energy uses for these appliances are listed in Table A-18.

TABLE A-18. ELECTRIC ENERGY USE FOR FLOOR CLEANING[1]

	Btu/capita/day[2,3]	Btu/event[2]
Vacuum	90.3-122.9	2,218-2,580
Floor polisher	40.1-48.6	980-1,194

1 Direct use, does not include conversion at the generating plant.

2 Computed assuming one vacuuming or polishing "event" per week.

3 Assuming 3.5 persons/household.

Sources: Edison Electric Institute, (10).

Boston Edison, (5).

Citizen's Advisory Committee on Environmental Quality, (23).

About 90 percent of households have vacuum cleaners (29), while a much smaller percentage have floor washers and polishers. Since these units account for much less than 1 percent of direct household energy use, they do not represent a major potential for energy reduction. Good maintenance practice, such as regularly cleaning or replacing the vacuum filter bag will both reduce energy use and lengthen the operating life of the appliance. Nonelectric procedures can be substituted for both appliances, but particularly in the case of vacuums, current home decorating patterns, featuring extensive carpet areas, reinforce the need for the appliance.

One exception to the low level of energy use in this category is the central vacuum system employed in some houses. We do not have quantitative data on the energy demand for this system, but the presence or absence of such a system has been found to be significant as a predictor of household electricity consumption (30).

BATHROOM

Bathroom activities are identified as toilet flushing, bathing (tub and shower), lavatory use (wash basin), and personal upkeep. Lavatory use is defined as water use and wastewater generation at the bathroom sink as opposed to personal upkeep which encompasses the use of electrical appliances such as hair dryers, water pics, electric shavers, and shaving cream heaters. Some solid waste, usually in the form of packaging material, is generated by the latter activity.* Energy used to heat water for bathing and lavatory activities is discussed in the Water Heating Section; however, the amount of hot water used for bathing and lavatory use is included in this section. Factors related to consumer behavior are discussed in this section <u>only</u> if they relate specifically to bathroom activities.

The flow of materials into and out of the bathroom and bedroom which is integrated with bathroom activities is shown in Figure A.9. Inputs consist of paper products (e.g., toilet paper, toothpaste containers, etc.), human waste (internal and external),† water and reused water, soap and detergent. Additionally, if a Clivus Multrum type wastewater treatment system is used, organic kitchen waste from food preparation would also be input. The activities consist of toilet flushing, bathing, and lavatory use. The materials outputs are waste residuals (e.g., wastewater and compost material which may be inputs to the outside function and/or back into the bathroom as reuse water), and solid waste (inputs to the kitchen function). Similarly, the energy flow into and out of the bathroom is shown in Figure A-10. Energy is consumed in the forms of hot water and electricity by bathing, lavatory use and personal upkeep; outputs are hot water and heat.

---

* Personal upkeep is a minor part of the bathroom activity. In the discussion of the bathroom function it is confined to the presentation of an estimate of energy use of small appliances.

† Internal refers to feces and urine, whereas external refers to perspiration, dirt, oil, etc., that is removed by bathing.

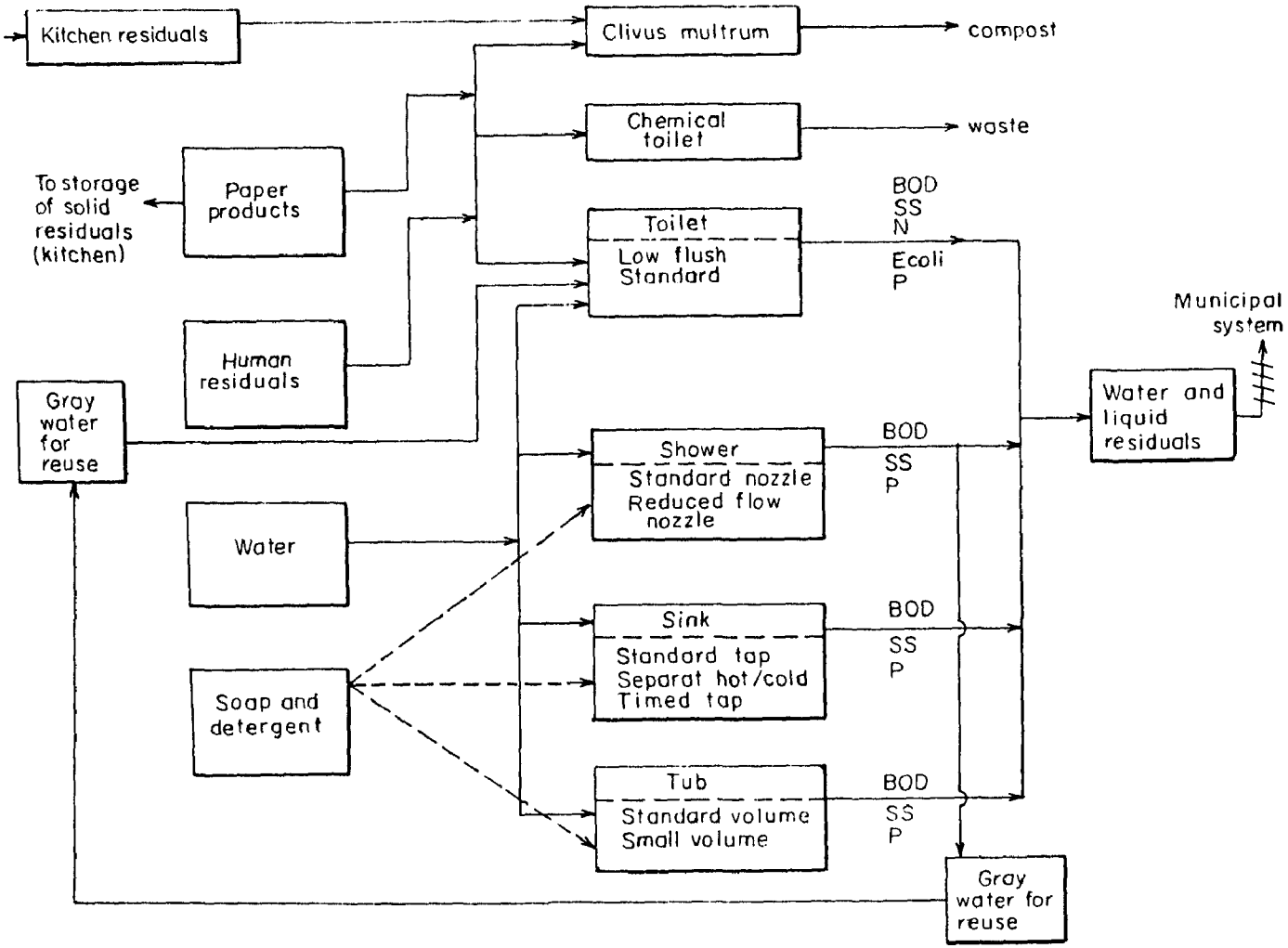

FIGURE A.9. BATHROOM -- RESIDUALS FLOW

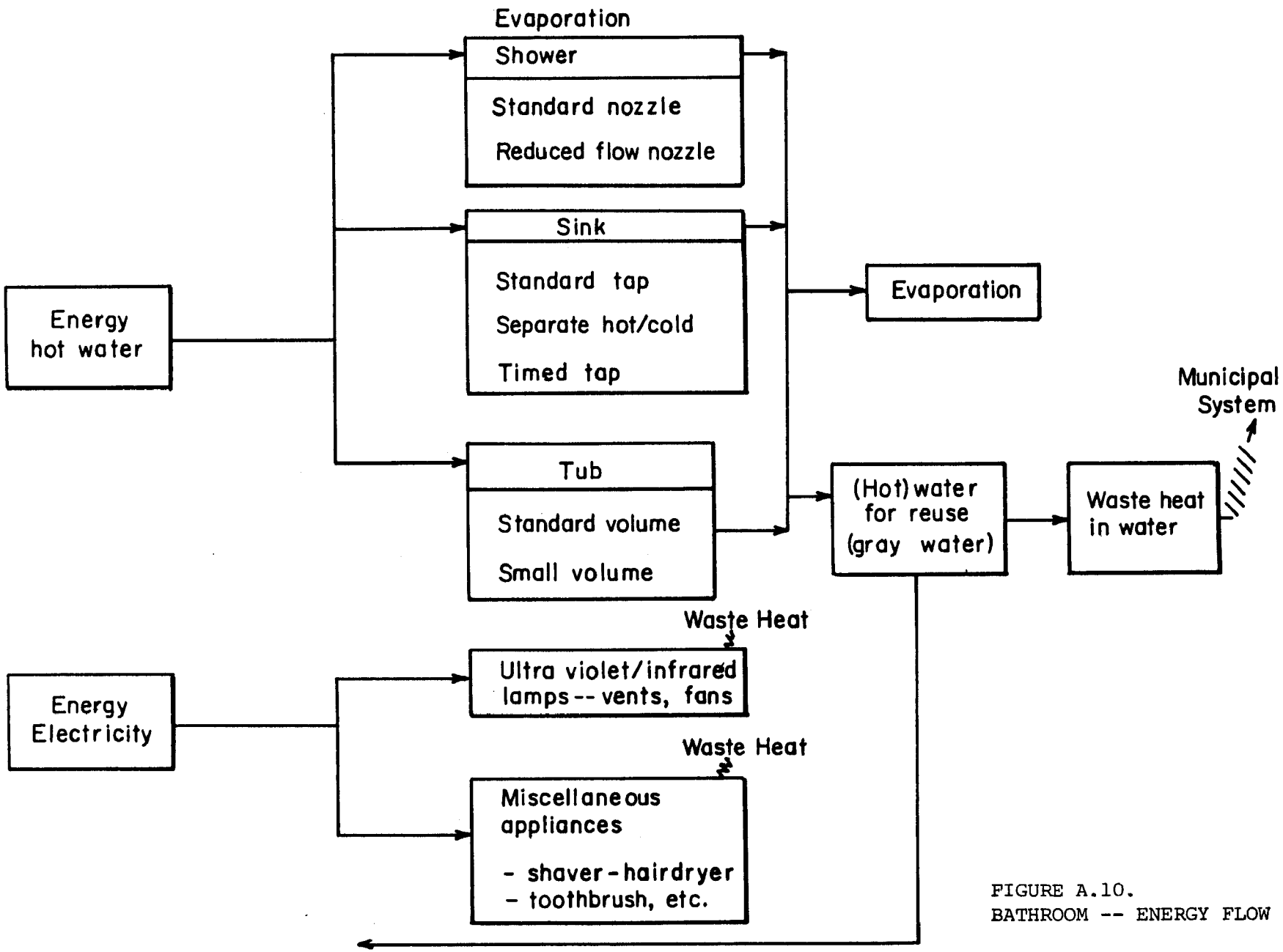

FIGURE A.10.
BATHROOM -- ENERGY FLOW

Conventional Practice

Water Use--

Water use data are shown for various bathroom activities in Table A-19. Overall residential water use is influenced by numerous factors, as discussed in Section 4; however, those factors influencing specifically bathroom and bedroom activities are discussed below.

Toilet flushing--The range of water use for toilet flushing shown in Table A-19 is from 9.2 gpcd (35.0 lpcd) to 26.2 gpcd (99.6 lpcd).* It has been reported that toilet flushing accounts for a major fraction of the total household water use; data show toilet flushing as low as 22 percent (31) and as high as 45 percent (13) of total daily residential water use.

Usage can be expressed as the product of volume per flush times the number of flushes per day. Conventional toilets have flushing volumes ranging from 3.0 gallons (11.4 liters), to 5.5 gallons (20.8 liters) (13). Older toilets often have larger tank volumes and use higher volumes per flush. The frequency of flushing reported in various studies is shown in Table A-20. No reason could be found for the lower value of 2.3 since the data represents a wide variety of family types (herdsman, pharmacist, etc.) and sizes (3 to 7 members), the coefficient of variation (C.V.), 0.26, for the low value is within the range of 0.25 to 0.42 for the other table values, and the total water use of 42.6 gpcd (162 lpcd) agrees with 44.4 gpcd for the higher frequency study.

Data on the frequency of toilet flushing by age group show that the frequency for adults is 4.5 per capita per day, while for both teenagers (13-20 years) and children (1-12 years) the frequency is 2.4 (12).

Combining frequencies and flush volumes, minimum and maximum water use values of 6.9 gpcd (26.2 lpcd) and 24.8 gpcd (94.2 lpcd), respectively, are obtained; the range agrees with the literature values shown in Table A-19.

Seasonal data show little difference between warm and cold weather periods. In Winsconsin (13), summer use is 2 percent greater than winter use whereas in Connecticut, Rhode Island and California (26), data show winter use 4 percent greater than summer use. These studies include families with children at school during the winter period, but the effect of their absence during the school day is minimal.

Cohen's study (26) shows small annual variation with monthly toilet flushings exhibiting C.V. from 0.14 to 0.20 within the study households; the average variation is 0.16. This is small compared to the variation between the study households, which have a C.V. of 0.48.

Peak daily values of toilet flushing occur between 7:00 a.m. to 8:00 a.m. and 6:00 p.m. to 8:00 p.m. These peaks are normally coincident with other activity peaks and can cause solids wash-out problems in on-site, wastewater

---

* gpcd is gallons per capita per day and lpcd is liters per capita per day.

TABLE A-19. WATER USE FOR BATHROOM (GPCD)

	REFERENCE								
Function	1	2	3	4	5	6	7	8	9
Bath	6.3	20.0	10.0	17.5	7.8	11.7	10.8	8.8	20.0
Shower	6.3	20.0	10.0	17.5	7.8	11.7	10.8	8.8	20.0
Toilet	17.1	25.0	9.2	26.2	17.6	18.4	14.4	14.5	24.0
Lavatory								2.0	
Total *	23.4	45.0	19.2	43.7	24.4	30.1	25.2	25.3	44.0

References:

1. Cohen, S. and H. Wallman, (26).
2. Bailey, J.R., et al., (31).
3. Witt, M.D., (13).
4. Haney, P.D. and C.L. Hamann, (32).
5. Laak, R., (33).
6. Ligman, K., (34).
7. Wallman, H., (35).
8. Bennett, E.R., et al., (12).
9. Reid, G.W., (36).

* Total includes either bath or shower, but not both.

TABLE A-20. FREQUENCY OF TOILET FLUSHING

		Ligman* (Rural)	Ligman* (Urban)	Bennett†	Siegrist‡
Frequency (flushes per capita per day)	Monday through Sunday	3.6 ± 1.5 (mean + std. dev.)	3.6 ± 0.9	3.6	2.3 ± 0.6
	Saturday and Sunday	3.8 ± 1.6	3.1 ± 1.2		

* Ligman, K., et al., (11).

† Bennett, E.R., et al., (12).

‡ Siegrist, R., et al., (24).

TABLE A-21. FREQUENCY OF BATHING

	Ligman* (Rural)	Ligman* (Urban)	Bennett†	Witt‡
Frequency (Number per capita per week)	3.1	2.8	2.2	3.3

* Ligman, K., et al., (11).

† Bennett, E.R., et al., (12).

‡ Witt, M., et al., (37).

treatment systems. The hourly peak has been reported at twice the daily average flow (12). Maximum daily average use can be 32 percent greater than the minimum (37).

Regional data show average toilet flushing volumes of 16.8 gpcd in Connecticut and Rhode Island (26), 8.5 gpcd in Wisconsin (37), 14.7 gpcd in Colorado (12), and 18.2 gpcd in California (26). The low value for Wisconsin is the result of low frequency of flushing, as previously discussed. No regional trend is apparent for toilet flushing.

Bathing--The range of water use for bathing, as shown in Table A-19, is from 6.3 gpcd (23.9 lpcd) to 20.0 gpcd (76.0 lpcd). Bathing has been reported from 18 percent (37) to 37 percent (38) of the total daily residential water use. Bathing involves either tub or shower use and there is considerable variation in water use for each. The variability of water use during a shower is high, due more to the duration per shower than frequency of showering (e.g., washing hair can require a longer shower consuming approximately an additional 15 gallons). Data indicate showers can take less (37), the same (12) and more (+50 percent) (11) water than tub bathing and exhibit a C.V. of 0.49. Studies have shown that a minimum volume of water for a shower can be 2.5 gallons (12), while the maximum can be greater than 50 gallons (the shower being limited in duration to the hot water tank capacity). Shower flow rates can be 5.0 gallons per minute (gpm) (19.0 lpm) to 10.0 gpm (38.0 lpm) (11). Bathing water use ranges from 16.3 gallons (61.9 liters) to 31.5 gallons (120 liters) per "event" (37). Tub bathing uses from 20 gallons (76.0 liters) to 30 gallons (114 liters) per use. Table A-21 shows the frequency of bathing reported in various studies.

Very little difference exists between the mean frequency of bathing according to the data; however, disaggregation according to age group does show a large difference. The most frequent bathers are the teenage group (from age 13-20) with 5.3 baths per capita per week. Adults bathe at a frequency of 1.9, and children (ages 1-12) at 1.1 (24). Multiplying these minimum and maximum frequencies of bathing by the minimum and maximum volumes per bathing event produces a range of 2.6 (9.8 lpcd) to 23.9 (90.8 lpcd) gpcd. This range is broader than shown in Table A-19; the minimum value is obtained from only child frequency and the maximum from only teenage frequency. Good agreement exists with the literature values when a realistic aggregated family frequency is used.

Seasonal data show little difference between water use for warm and cold weather. May to November data show an average of 6.0 gpcd (22.8 lpcd) compared with December to April averages of 7.0 gpcd (26.6 lpcd) (26). Seasonal differences do exist for hot water use as discussed under energy in this section.

Variations within individual households over a year, expressed as C.V., show a range of 0.11 to 0.39; the average is 0.26 (26). These same data have a C.V. between households of 0.49. Bathing appears to be more variable than toilet flushing within a household but about the same between households.

Bathing water use peaks at approximately the same hours as toilet flushing, 7:00 a.m. to 9:00 a.m. and 6:00 p.m. to 8:00 p.m. For on-site wastewater treatment systems, the impact of tub drain rates of 10-15 gpm (38-57 lpm) is

more severe than shower drain rates of 2-5 gpm (8-20 lpm) due to solids wash-out potential.

Regional bathing data exhibit no definable trend in water use. In Connecticut and Rhode Island the water use (gpcd) is 6.2 (26); in Wisconsin 9.3 (13); in Colorado 8.7 (25); and in California 6.6 (26).

Lavatory--Little data exist on water use for the lavatory (bathroom sink). Studies report total water use for all sinks in the household range from 9.9 gpcd (39.61 lpcd) (31) to 18.0 gpcd (72 lpcd) (26). Bennett, et al. (12), report water use at the sink (including lavatory) to be highly variable ranging from a "trace" to 48 gallons (192 liters) per event (e.g., washing hair in the lavatory will greatly increase water use); the mode is 1 gallon (3.8 liters) and the mean 1.7 gallons (6.5 liters) per "sink" event with a recommended distribution of 35 percent kitchen and 65 percent bathroom lavatory use. Based on this apportionment, the lavatory is used daily 3.8 times by adults, 1.9 by teenagers (13-20 years old) and 2.0 by children (1-12 years). This is approximately the same ratio as toilet flushing. Using 1.7 gallons (6.5 liters) per use and the above frequencies, the range of lavatory water use is 3.2 gpcd (12.2 lpcd) to 6.5 gpcd (24.7 lpcd).

Wastewater Generation--

Wastewater residuals for various bathroom activities are discussed below. The toilet receives primarily human wastes, the sink receives lint and debris from washing, toothpaste, hair from shaving or hair washing, shampoo, and other soaps or detergents, etc., and bathing wastewater contains residuals similar to the sink with the possible addition of urine. However, each activity could also involve detergents, cleaning solvents, household cleaning debris, polishes, and numerous other substances, some of which may be toxic. The constitutents of wastewater considered below are BOD_5, suspended solids, total nitrogen and total phosphorus; bacterial concentrations are discussed for potentially reusable bathing wastewater.

Toilet wastewater--It is estimated that toilet wastewater contains daily fecal discharge of 100-200 grams (net weight) per capita, urine discharge of 800-1,500 milliliters per capita (mlpc) and toilet paper of 4-20 grams per capita (gmpc). Associated with these are BOD_5 values of 0.32 gm/gm feces, 0.009 gm/gm urine and 0.20 gm/gm toilet paper (11). Table A-22 shows a range of total BOD_5 values, 0.015 to 0.083 pounds (lb) per capita per day and 0.004 to 0.015 lb per event. The range is smaller considering BOD_5 as "per event," since frequency data (used to convert to a "per capita" basis) show wide variations (see water use discussion for toilet flushing in this Section).

Similarly, comparative data for suspended solids presented in Table A-23 show a range of from 0.024 to 0.102 lb/cap/day. The range per event is narrowed to 0.017 to 0.022 lb per event.

The major nutrients, nitrogen and phosphorus, in toilet wastewater are shown in Table A-24. The range for total nitrogen and total phosphorus is 0.003 to 0.050 and 0.003 to 0.008 lb/cap/day, respectively.

TABLE A-22. COMPARISON OF BOD_5 DATA FOR TOILET FLUSHING WASTEWATER

		Ligman*	Bennett†	Laak‡	Witt**
BOD_5 (pounds per capita per day)	Fecal	0.025 (.017-.040)	0.010		0.010
	Urine	0.023 (.018-.037)	0.005		0.014
	Paper	0.004 (.003-.006)	-		-
	Total	0.052 (.038-.083)	0.015	0.052	0.024
BOD_5 (pounds per event)		0.014	0.010	0.004	0.015

* Ligman, et al., (11).

† Bennett, et al., (12).

‡ Laak, R., (17).

** Witt, et al. (37).

TABLE A-23. COMPARISON OF SUSPENDED SOLIDS DATA FOR TOILET FLUSHING WASTEWATER

		Ligman*	Bennet†	Witt‡
Suspended Solids (pounds per capita per day)	Fecal	.048 (.040-.062)	.048	.010
	Urine	-	-	.014
	Paper	.020 (.010-.040)	.032	-
	Total	.068 (.050-.102)	.080	.024
Suspended Solids (pounds per event)	Total	.018	.022	.017

* Ligman, et al., (11).

† Bennett, et al., (12).

‡ Witt, et al., (37).

TABLE A-24. COMPARISON OF TOTAL NITROGEN AND TOTAL PHOSPHORUS DATA FOR TOILET FLUSHING WASTEWATER

		Ligman*	Laak†	Bennet‡	Witt**
Total Nitrogen (pounds per capita per day)	Feces	.003 (.001-.005)		.004	.003
	Urine	.034 (.002-.045)		.008	.006
	Paper	-		-	-
	Total	.037 (.003-.050)	.032	.012	.009
(per event)		.010	.006	.003	.006
Total Phosphorus (pounds per capita per day)	Feces	.001 (.001-.004)		.002	.001
	Urine	.002 (.002-.004)		.001	.001
	Paper	-		-	included above
Total		.003 (.003-.008)	.001	.003	.002
(per event)	Total	.001	.001	.001	.001

* Ligman, et al., (11).

† Laak, R., (17).

‡ Bennett, et al., (12).

** Witt, et al., (37).

The range of total nitrogen per toilet flushing event is 0.003 to 0.010 lb; a total phosphorus value of 0.001 lb per event, is reported in the study data.

Ligman (34) reports that toilet wastewater suspended solids are 82 percent volatile, total nitrogen is essentially organic and ammonia type, approximately 50 percent of phosphorus is ortho type, and approximately one-half the BOD_5 is removable by filtration.

Toilet wastewater constitutes approximately 21 percent of the total residential BOD_5, 37 percent of the total suspended solids, 73 percent of the total nitrogen and 33 percent of total phosphorus.

Bathing wastewater--Bathing wastewater in the residential sector ranges from 18 to 37 percent of total residential water use, ranking second in quantity to toilet flushing (37); it contributes approximately 8 percent of the BOD_5 and 4 percent of the suspended solids of the total residential waste load. These wastewaters provide the best source of potential wastewater reuse within the household. Table A-25 shows the bacteriological characteristics of the bathing wastewater. Analysis of isolates suggests that much of the bacterial contamination of these wastewaters is probably from the natural environment or the natural skin flora; therefore, their presence in the bathing wastewater is not considered of great sanitary significance with respect to potential reuse.

The range of BOD_5 for bathing wastewater in Table A-26 is 0.007 to 0.032 lb/cap/day; on an event basis, the range is 0.017 to 0.063 lb.

Comparable figures for suspended solids shown in Table A-27 range from 0.002 to 0.042 lb/cap/day. The range by event is 0.004 to 0.083 lb per event.

The range of BOD_5 and suspended solids values for bathing is not reduced by considering per event basis. This indicates the wastewater residuals from an individual bathing event are highly variable in relation to less variable toilet flushing wastewater when considered on a per event basis.

Most people bathe at their house regardless of their varied daily activities, whereas toilet flushing can occur outside the house as well as in the house, depending upon the daily activities. The variation of wastewater residuals for toilet flushing events is strongly dependent upon the physical size of the contributor or a surrogate, age (i.e., an adult event contributes more than a child event); the frequency of toilet flushing is influenced by life style. In contrast, life style influences the wastewater residuals for the bathing event because of occupation (coal miner vs. school teacher), hobby (tennis vs. chess) and so forth as well as frequency of bathing; however, frequency is most dependent upon age as discussed earlier.

Lavatory wastewater--Minimal data exists on segregated lavatory wastewater characteristics; a summary of available data is shown in Table A-28. The nutrients are zero but the BOD_5 and suspended solids contribution is greater than from bathing.

TABLE A-25 . . * BACTERIOLOGICAL CHARACTERISTICS OF BATHING WASTEWATER

Organism	Range (per 100 mℓ)	Geometric Mean (per 100 mℓ)
Fecal Streptococci	1-70,000	44
Fecal Coliforms	1-2,500	220
Total Coliforms	70-8,200	1,100

* Siegrist, et al., (24).

TABLE A-26 . COMPARISON OF BOD_5 DATA FOR BATHING WASTEWATER

	Ligman*	Bennett†	Witt‡
BOD_5 (pounds per capita per day)	0.020 (.011-.032)	0.007	0.007
BOD_5 (pounds per event)	0.039 (.022-.063)	0.023	0.017

* Ligman, et al., (11).

† Bennett, et al., (12).

‡ Witt, et al., (37).

TABLE A-27. COMPARISON OF SUSPENDED SOLIDS DATA FOR BATHING WASTEWATER

	Ligman*	Bennett†	Witt‡
Suspended Solids (pounds per capita per day)	0.012 (.002-.042)	0.002	0.005
Suspended Solids (pounds per event)	0.027 (.004-.083)	0.006	0.013

* Ligman, et al., (11).

† Bennett, et al., (12).

‡ Witt, et al., (37).

TABLE A-28. LAVATORY WASTEWATER CHARACTERIZATION

	BOD_5	Suspended Solids	Total Nitrogen	Total Phosphorus
Residual (pounds per capita per day)	0.011	0.009	0.0	0.0

* Bennett, et al., (12).

Analysis of some typical products which may be introduced into the lavatory wastewater is shown in Table A-29.

Data for lavatory wastewater residuals indicate contributions of approximately 8 and 6 percent of the residential BOD_5 and suspended solids, respectively.

Energy Use and Air Emissions--

Energy use in the bathroom from lighting is discussed under aggregated household lighting. Small electrical appliances used for personal upkeep are shown in Table A-30, estimating the time of use per year, the annual energy use of these appliances is calculated as 27.3 kwh. The major energy use in the bathroom is associated with hot water use; it is estimated that approximately 40 percent of household hot water use occurs in the bathroom (26). Seasonal variation exists with winter use of hot water for bathing being 30 percent greater than summer use; hot water use in summer is approximately 55 percent of total bathing use. Based upon an aggregate of bathing and lavatory use, a range of 9.5 to 26.5 gpcd (35.1 to 101 lpcd) is calculated. The hot water associated with this range is 5.2 to 14.6 gpcd (19.8 to 55.5 lpcd) and 6.8 to 19.0 gpcd (25.8 to 72.2 lpcd) summer and winter use, respectively. Energy used to heat water is discussed in detail under the Water Heating Section.

The air emission residuals for bathroom and bedroom functions are primarily associated with space heating (e.g., type of heating system, type of fuel, etc.) and remote energy generation (i.e., electricity generation). Air emission residuals are discussed under the Space Heating, Water Heating functions.

LIVING AND ENTERTAINMENT

The major energy-user falling under the category of living and entertainment is the television. As can be seen from Table A-31, a color television uses more energy than a black and white and a tube television uses more than a solid state.

The "instant-on" feature with which many televisions are equipped consumes a significant amount of electricity. This feature is expected to disappear from new sets.

Other items which may contribute to energy consumption in this category are stereos, radios, and electric hobbies and games. A stereo uses the same amount of electricity per hour as does a black and white tube television. Therefore, in some households it will be a significant energy consumer. Slide or film projectors are another, minor, energy-user.

Many objects and devices which are used for the entertainment of both children and adults are a source of solid residuals. The most obvious example of this are poorly-made toys which break quickly and are then thrown out. Added to this, energy has been consumed in their production. For this reason, when discussing conservation in living and entertainment, we must evaluate the patterns of our consumption not only in terms of the durability of the goods we buy but also in terms of the actual production of these goods.

TABLE A-29. POTENTIAL CONTRIBUTION OF LAVATORY INPUT MATERIALS

		Ratio*	COD	BOD_5	Total PO_4-P
Hair Care	Fitch Shampoo	b	1.024	.084	0.0
	Wella by Balsam	b	4.720	.026	0.0
	Breck Setting Lotion	b	0.054	xx†	0.0
Hand Soap	Dial	a	2.355	1.809	0.0
	Unknown	a	2.375	1.840	0.0
Tooth Care	Ultra Brite	a	3.171	0.200	0.098
	Tooth Powder	a	2.602	0.082	0.0001

* a = ratio mg. of pollutant product to mg. of product;
b = gm. of pollutional product to ml. of product.

† xx = material was toxic to BOD_5 testing organism.

Source: Bennett, et al., (12).

TABLE A-30. ENERGY USE FOR PERSONAL UPKEEP*

Appliances	Wattage	Use Time/Year (hrs)†	Killowatt-hours/year
Hair Dryer	600	39	23.4
Heat Lamp	250	13	3.2
Shaver	14	52	0.7
Total			27.3

* Association of Home Appliance Manufacturers, Edison Electrical Institute (10).

† Meta Systems average estimate based on much diverting figures in literature.

TABLE A-31. ENERGY CONSUMPTION OF TELEVISION

	Average Wattage	Energy Consumption*		% Saturation†	
		kwh/year	10^3 Btu/cap/day‡	1970	1990
Black and White	50 - 160	100 - 330	.27 - .88	99	85
Color	175 - 300	350 - 525	.93 - 1.4	51	98

* The values of the range are comprised of average values given for tube (upper bound) and solid state (lower bound) in reports of the Edison Electric Institute

† "Project Independence," (14).

‡ Assumption of 3.5 people/household.

Entertaining guests is a major activity in some families. Depending upon social tastes and income, entertaining can influence other functions, such as the Kitchen and Washing and Cleaning in terms of both the amount of energy, foods and other materials consumed and the amount of residuals produced from cans and bottles, food waste and packaging, wastewater from dishwashing and so forth. Large groups of people can contribute greatly to the cooling load as can extensive use of the stove and oven for food preparation.

Finally, personal hobbies can range from the passive non-consuming sort (stamp collecting) to a moderately energy-using sort (sewing) to larger energy and material users such as wood-working and carpentry (assuming power tools).

OUTDOORS

The two most important activities within the outdoors function are gardening and recreation. Of these, gardening uses more resources, particularly water, and generates a greater volume of residuals in the form of yard clippings, grass and leaves. In the warmer parts of the country recreation might include a swimming pool, but its water use is a surprisingly small component of total outdoor water consumption. The greatest users of energy outdoors are power tools for gardening, swimming pool filter pumps, and lighting for entertainment and recreation. However the requirements are negligible and quantitative estimates are not made. Also, the wastewater generated by outdoor acitivites is insignificant, except in the cases of consistently over-watering the lawn or garden. Estimates of outdoor water use and solid waste generation are discussed below.

Water Use

There are tremendous variations in the estimates of outdoor water use reported in the literature. Lawn watering and the irrigation of plants and shrubs, which account for almost all that is used, differ across regions, vary with the season, and demonstrate a demand behavior which is both price and income elastic (39). In addition, the amount needed to care for lawns and shrubs depends on the area of yard available for gardening. Linaweaver (40) reports that in the West residential units use twice as much water as comparable Eastern units and that for the nation as a whole the ratio of summer use to average annual use is approximately 2.5. Discussing the results of a study on 39 communities, Howe and Linaweaver (39) estimated that for a subset of these communities in the West the outdoor water use in the areas with water meters was 186 g/day per dwelling unit and in the unmetered areas the figure was 420 g/day per dwelling unit while indoor water use differed by less than 5 percent. Augmenting the data with metered communities from the East they estimated that the price elasticity was -1.16 and the income elasticities was 1.07. These elasticities showed that outdoor use of water is far more sensititive to price and income than is indoor use.

In reviewing several studies of residential water use Milne (41) concludes that a reasonable estimate of outdoor use is 70 gpcd. A recent review of water demand in California, employing data from 1972, reports that total residential use was approximately 151 gpcd of which 66 gallons or 44 percent was consumed outdoors primarily for landscape irrigation (42). Andrews (43) found

in a study of three New Hampshire towns that in two of the towns fewer than 10 percent of the residences watered the lawns at all. However, in the demand study of Howe and Linaweaver (39), the authors report that during the summer the mean daily outdoor water use in the unmetered Eastern communities of their sample was over 1,000 gallons.

Clearly the variation is significant. Nonetheless, except for the case of the New Hampshire towns, most residences use a considerable amount of water outdoors during those seasons when the weather is favorable. In some regions that implies a substantial demand throughout the year.

Solid Residuals

The weight of solid residuals generated by a household in landscaping and gardening vary widely. As with outdoor water use, seasonal, regional, and income effects and type of residence are important. However, there are few data available and most estimates are not based on direct measurements, but on educated guesses or very small samples. For example, in three studies containing figures on the composition of residential solid waste for Santa Clara County, California, the estimate of the percentage by weight of yard wastes in one study was 23.8 percent, in the second study it was 9 percent and in the third study is was 34.5 percent (44). Such apparent discrepancies are not unusual and may depend on nothing more than the time of year when the data were collected. In a study of municipal solid waste in Springfield, Massachusetts, the percentage of garden waste varied considerably over the four seasons. In the winter it was 0.0 percent, in the spring 10.0 percent, in the summer 21.0 percent, and in the fall 34.5 percent (45). Converting these figures to pounds per household per week (lb/HH/wk) increases the variation:

	lb/HH/wk
Winter	0.0
Spring	5.4
Summer	9.7
Fall	25.1

With the kind of range exhibited by these estimates it is impractical to put forward a single figure to be used in all circumstances requiring the calculation of solid waste load. Nonetheless they do show the importance of yard wastes as a component of residential solid waste and demonstrate that at certain times of the year leaves and lawn clippings may be the major items in solid residuals.

MAINTENANCE

Under the function of maintenance are such activities as upkeep and repair of the interior and exterior of the residence and care and cleaning of an automobile. Maintenance of a residence requires small amounts of energy and water and generates little in the way of residuals. Although no data are available it is safe to assume that amounts of resources used and residuals created are negligible. However, an automobile, depending on the habits of its owners, may be a different matter.

Automobile Maintenance

Washing a car can require between 150 and 300 gallons of water.* If the car is washed on an impermeable surface or in the street, a substantial portion of the water may runoff into the sewer system carrying with it the detergent, grit, salt, paint and other forms of debris which are washed from the car and scoured from the driveway and street. If the car is washed on a permeable surface, most of the water probably infiltrates and there is little runoff. However, this is another case in which there are no data. The best estimates available which may be applicable are from a study which includes some data on self-service auto washers. The pollutants which were measured were total solids, total volatile solids, suspended solids, volatile suspended solids, BOD_5, and oil and grease (46). The results appear in Table A-32. The concentrations of total solids, total volatile solids, suspended solids, and grease are very high. However, the study reports that the average volume of water used per car is only 20 gallons which is much lower than our estimates of the water needed when washing a car at home. In the latter case it is reasonable to assume that the concentration of pollutants would be much lower.

One other auto maintenance activity generates an important residual. The backyard oil change means that used lubricating oil may be poured in the sewer, flushed down the toilet, spread on the ground or taken to a collection facility. Recent estimates of the annual automotive consumption of motor oil place the figure at 1.1 billion gallons. A little less than half is burned or somehow lost in the process of lubrication leaving 600 million gallons to be reused or disposed of in some other way (47). For a long time most of the oil was drained and replaced at service stations where the used oil was stored and eventually hauled off to be treated or rerefined for use as a fuel or lubricant or in the manufacture of asphalt. However, today almost half of the automotive lubricating oil is sold by discount stores and other outlets (48). People are now changing the oil in their cars and the used oil is being dumped along with the lead, copper, barium, zinc, phosphorus, tin, or chromium it may contain. This is another case where there are no data on the magnitude or distribution of the residuals, although it is probably reasonable to assume that in certain areas the problem may be important.

TABLE A-32. TYPICAL POLLUTANT CONCENTRATIONS IN WASTEWATER FROM SELF-SERVICE AUTO WASHERS OVER A 10 MONTH PERIOD
(all units mg/l)

	Minimum	Maximum	Average
Total Solids	729	3,334	2,006
Total Volatile Solids	207	871	456
Suspended Solids	95	840	386
Volatile Suspended Solids	25	116	72
BOD_5	15	166	57
Grease and Oil	38	200	86

* Assume flow to be between 5 g/min and 10 g/min and time to wash car at 1/2 hour.

APPENDIX A

REFERENCES

1. Carroll, T. Owen, et al., Land Use and Energy Utilization (Interim Report), for Office of Conservation and Environment, Federal Engery Administration, February 1976, p. 55.

2. U.S. Environmental Protection Agency (EPA), "Compilation of Air Pollutant Emission Factors," Second Edition, April 1973, AP-42; U.S. EPA, Supplements #1, 2, and 3 to the above.

3. Committee on Finance, U.S. Senate, Energy Statistics, Washington, D.C.: U.S. Government Printing Office, July 1975.

4. Census of Housing, 1970, Bureau of Census, Department of Commerce, Washington, D.C.

5. Boston Edison, "The Wise Use of Energy," Boston, Massachusetts, undated.

6. Hittman Associates, "Multifamily Housing Final Report," prepared for U.S. Department of Housing and Urban Development, Washington, D.C.: Government Printing Office, June 1974.

7. American Gas Association, 1974 Gas Facts, Arlington, Virginia, 1975.

8. American Society of Heating, Refrigeration and Air Conditioning Engineers, Inc. (ASHRAE), "Energy Conservation in New Building Design," ASHRAE Standard no. 90-75, 1975.

9. Hittman Associates, "Residential Energy Consumption," Phase I Report, prepared for Department of Housing and Urban Development, March 1972.

10. Edison Electric Institute, "Annual Energy Requirements of Electric Household Appliances," New York, N.Y., 1975.

11. Ligman, K., N. Hutzler, and W.C. Boyle, "Household Wastewater Characterization," Journal of Environmental Engineering Division ASCE, 100, EE1, February 1974, pp. 201-215.

12. Bennett, E.R., K.D. Linstedt and J. Felton, "Comparison of Septic Tank and Aerobic Treatment Units: The Impact of Wastewater Variations on These Units," Proceedings of the Rural Environmental Engineering Conference, University of Vermont, Burlington, Vermont.

13. Witt, M.D., "Water Use in Rural Homes," Small Scale Waste Management Publication, 1974, 27 pp.

14. "Project Independence," Federal Energy Administration Project Independence Blueprint Final Task Force Report, Volume 1, prepared by the Interagency Task Force on Energy Conservation, under direction of Council on Environmental Quality, November 1974.

15. Consumer Report, December 1975, pp. 7-8.

16. "Patterns of Energy Consumption in the U.S.," Stanford Research Institute, January 1972.

17. Laak, R., "The Effect of Aerobic and Anaerobic Household Sewage Pretreatment of Sewage Beds," Ph.D. thesis presentation at the University of Toronto, Toronto, Ontario, Canada, 1966.

18. Watson, K.S., Water Requirements of Dishwashers and Food Waste Disposers, J. AWWA, 55, 555 (1963).

19. Davidson, G.R., Jr., "A Study of Residential Solid Waste Generated in Low-Income Areas," EPA-SW-83ts, 1972.

20. Quimby, T., Resource Recovery Conference: Solid Waste Management in Buildings, November 15-16, 1972.

21. Smith, F.L., "A Solid Waste Estimation Procedure: Material Flows Approach," U.S. EPA, SW-147, May 1975.

22. Association of Home Appliance Manufacturers, "Energy Data," Chicago, Illinois, undated.

23. Citizen's Advisory Committee on Environmental Quality, "Citizen Action Guide to Energy Conservation," 1973.

24. Siegrist, R., M. Witt, and W.C. Boyle, "Characteristics of Rural Household Wastewater," Journal of Environmental Engineering Division ASCE, 102, June 1976, pp. 533-548.

25. Bennett, E.R. and K. Linstedt, "Individual Home Wastewater Characterization and Treatment," Environmental Resources Center Completion Report Series no. 66, Colorado State University, Fort Collins, Colorado, July 1975.

26. Cohen, S. and H. Wallman, "Demonstration of Waste Flow Reduction for Households," prepared for U.S. EPA, September 1974, EPA-670/2-74-071.

27. Consumer Report, October 1975.

28. Environment Information Center, Inc., The Energy Index, Volume 3, New York, N.Y., December 1975.

29. Merchandising Week 102 (8), 1970.

30. Center for Environmental Studies, Princeton University, "Energy Conservation in Housing," continuation proposal submitted to the National Science Foundation, 1975.

31. Bailey, J.R., R.J. Benoif, J.L. Dodson, J.M. Robb, and H. Wallman, "A Study of Flow Reduction and Treatment of Wastewater from Households," U.S. EPA, 11050FKE 12/69, December 1969.

32. Haney, P.D. and C.L. Hamann, "Dual Water Systems," Journal American Water Works Association, 57, September 1965.

33. Laak, R., "Home Plumbing Fixture Waste Flows and Pollutants," Unpublished report, University of Connecticut, Storrs, Connecticut, 1972.

34. Ligman, K., "Rural Wastewater Simulation," M.S. Independent Study Report, University of Wisconsin, Madison, Wisconsin, 1972.

35. Wallman, H., "Should We Recycle/Conserve Household Water?" 6th International Water Quality Symposium, Washington, D.C., April 18-19, 1972.

36. Reid, G.W., "Projection of Future Municipal Water Requirements," Southwest Water Works, S. 46:18, 1965.

37. Witt, M., R. Siegrist and W.C. Boyle, "Rural Household Waste-Water Characterization," Proceedings of the National Home Sewage Disposal Symposium, December 1974, pp. 79-88.

38. "Public Water Supplies in the 100 Largest Cities in the United States," U.S. Geological Survey, Water Supply Paper No. 1812, 1962.

39. Howe, W. and F.P. Linaweaver, Jr., "The Impact of Price on Residential Water Demand and its Relation to System Design and Price Structure," Water Resources Research, Volume 3, No. 1, 1967.

40. Linaweaver, F.P., et al., Report V on Phase Two of the Residential Water Use Project, Department of Environmental Engineering Science, Johns Hopkins University, 1966.

41. Milne, M., Residential Water Conservation, California Water Resources Center Report No. 35, March 1976.

42. Water Conservation in California, Department of Water Resources, Bulletin No. 198, May 1976.

43. Andrews, Richard A., and Martha R. Hammond, Characteristics of Household Water Consumption in Three New Hampshire Communities, Water Resource Research Center, University of New Hampshire, December 1970.

44. Niesson, W.R. and S.H. Chansky, "The Nature of Refuse," Proceedings of 1970 National Incinerator Conference, ASME Incinerator Division, Cincinnati, Ohio, May 17-20, 1970, p. 4; Comprehensive Studies of Solid Waste Management - First and Second Reports, HEW, Public Health Service Publication No. 2039, p. 20; and Darnay, A. and W.E. Franklin, Salvage Markets for Materials in Solid Wastes, for Environmental Protection Agency, Contract No. CPE 69-3, 1972, p. 156-2.

45. Meier, P.M., J. Kühner, and R.E. Bolton, Wet Systems for Residential Refuse Collection: A Case Study of Springfield, Massachusetts, Report by Curran Associates, Inc. to EPA Solid and Hazardous Waste Research Laboratory, Cincinnati, Ohio, March 1974 (published by NTIS, PB-234-499/AS).

46. Development Document for Proposed Effluent Limitations Guidelines and New Source Performance Standards to the Auto and Other Laundries, EPA Office of Enforcement and General Council, April 1974.

47. Decision Makers Guide in Solid Waste Management, EPA Office of Solid Waste Management Programs, SW-500, 1976.

48. Maugh, Thomas H., II, "Rerefined Oil: An Option that Saves Oil, Minimizes Pollution," Science, Volume 193, 17 September 1976.

APPENDIX B

HEATING AND COOLING LOAD CALCULATIONS

DESIGN HEATING AND COOLING LOADS

Thermal requirements for different kinds of structures are either of a prescriptive nature (a maximum thermal resistivity of walls, roof, etc., is allowed), or performance oriented (a maximum heat loss or gain is allowed during a one-hour period at design conditions). Design conditions represent the most extreme conditions which heating and cooling systems are expected to handle.*

DESIGN HEAT LOSS CALCULATION

Hourly design heat loss was calculated using the ASHRAE method. There are two components of heat loss: transmission and infiltration. Transmission represents the heat lost by conduction through exterior surfaces. It is equal to the area of the surface multiplied by a conduction coefficient (U) which varies according to the construction material; this product in turn is multiplied by the temperature difference between indoor and out. For a wall area of 1,082 ft.^{2} with a U coefficient of .08 and a temperature difference of 75°,

$$1{,}082 \times .08 \times 75 = 6{,}492 \text{ Btuh.}$$

This procedure is carried out for all exterior surfaces.

To this is added heat loss due to infiltration of air through cracks and openings. This is also calculated according to ASHRAE procedures. Modifications such as weatherstripping and cutting down on door openings are done to decrease heat loss due to transmission by making it harder for heat to travel across the boundary (a smaller U value).

Example of Heat Loss Calculation for a 1,500 sq ft home (see Table B-1 for dimensions).

- Transmission Loss:

	Area		U coeff.		Temp. Diff.		Heat Loss (Btuh)
Walls	1,040	x	.06	x	75	=	4,680
Roof	1,740	x	.10	x	75	=	13,050

---

* Heating systems are designed to be able to handle the temperature difference between indoor and outdoors which occurs one percent of the time. According to the ASHRAE Standard 90-75, this should be changed to that which occurs 2-1/2 percent of the time.

TABLE B-1. DIMENSIONS

	Sq Ft Living Area	Sq Ft First Floor Area	Sq Ft Roof Area	Sq Ft Gross Exterior Wall Area	Sq Ft Window* Area	Sq Ft Net Wall† Area	Ft Length x Width	Ft. Perimeter	Cu Ft Volume	Cu Ft Height
Single Family One-story	1,500	1,500	1,740	1,280	220	1,060	50x30	160	12,000	8
Single Family Two-story	1,600	800	880	1,950	240	1,710	38x21	118	12,800	16.5
Townhouse (9 units, split level)	11,250	6,300	6,300	7,310	1,125	6,185	35x20	430	107,100	17
Low-Rise (27 units, 3-story)	27,000	9,000	9,000	11,960	2,700	9,260	180x50	460	234,000	26

* Window area was assumed to be about 15 percent of floor area for the single family structure and about 10 percent for the other structures.

† Includes door area.

•Transmission Loss (continued)

	Area		U coeff.		Temp. Diff.		Heat Loss (Btuh)
Floor	1,500	x	.2	x	30	=	9,000
Windows	192	x	1.13	x	75	=	16,272
Door	42	x	.4	x	75	=	1,260
Total Transmission Loss (Btuh)							44,262

•Infiltration:* air exchange/hr. x .018 x 12,000† cu ft x 75 = 16,200

•Total Heat Loss 60,462

•Total Heat Loss (Btuh)/sq ft living area 40

DESIGN COOLING LOAD CALCULATION

The components of cooling load are the following:

1. heat gain due to temperature difference between indoors and out;
2. heat gain due to solar radiation;
3. heat gain due to infiltration;
4. heat gain due to occupants;
5. heat gain due to appliances;
6. heat gain through ducts;
7. latent heat load.

The first two are referred to as the sensible cooling load. This encompasses heat gain through the outer shell (due to transmission and solar radiation, the latter figuring larger) and is calculated in the same manner as transmission heat loss, though instead of using the actual temperature difference between inside and out, an equivalent temperature difference (ETD) is used to take account of factors which influence solar radiation. Thus there will be a different ETD depending on color, mass, and orientation of the external surfaces.

The cooling load due to components 3-7 have been taken from Thermal Design of Buildings. They are as follows:

Infiltration -- 1.5 Btuh/sq ft of gross exterior wall area;
Occupants -- 250 Btuh/person (4 occupants per single family unit; 3.0 occupants per 3-story low-rise unit and townhouse unit);
Appliances -- 1,200 Btuh/unit;
Ducts -- 5-15 percent of the sensible heat gain; we assumed 5 percent;
Latent Heat Load -- 30 percent of the sensible heat gain.

---

* See ASHRAE Handbook of Fundamentals.

† Volume of air in structure.

The total of numbers one through seven, when divided by square footage of living area, gives cooling load per square foot of living area.

ANNUAL HEATING AND COOLING LOADS

Annual loads are found, in the case of heating, using degree days per year and in the case of cooling using cooling hours per year. The number of degree days for an area is the sum of the product of the difference between 65° and the average daily outdoor temperature (when the outdoor temperature is below 65°), multiplied by the number of days for which this temperature is recorded.

For example, if it was 25° for 4 days and 30° for two days then,

$((65-25) \times 4) + ((65-30) \times 2) = 210$ degrees days.

So these six days contributed 210 degree days to the annual total.

The heating loss figures in Table 8*are given in terms of Btu/sq ft/degree day. They can be converted to annual loads by multiplying by the annual number of degree days for the region as found in Table B-2. But since homes are usually heated to a temperature greater than 65°, Table B-3 should first be used when calculating annual load.

Cooling hours per year are also found in Table B-2.

THERMAL CONDUCTIVITY OF STRUCTURAL COMPONENTS

Below are the thermal conductance (U) values which were used for walls and ceilings at different levels of insulation, and also for single windows and storm windows. The outer wall material is comparable to wood or brick veneer while the roof material is comparable to asphalt shingle. As levels of insulation increases, outer wall material figures less and less in the overall U value.

Wall

	No Insulation	1"	1-1/2"	2"	3"	3-5/8"	4"	5"	5-5/8"
U	.28	.14	.10	.09	.07	.06	.055	.046	.042

Ceiling

	No insulation	1"	2"	3"	4"	5"	6"	9"	12"	15"	18"	21"	24"
U	.26	.17	.10	.08	.06	.05	.043	.029	.023	.018	.015	.013	.011

	Single Window	Storm Window
U	1.13	.65

* Main report, page 25.

TABLE B-2. CLIMATIC FACTORS FOR SELECTED CITIES IN THE U.S.

	Winter Design Temperature	Winter Degree Days	Summer Cooling Hours	Average Heating Season Outdoor Temperature
Mobile, Alabama	26	1,600	1,850	55
Anchorage, Alaska	-25	10,800	---	---
Phoenix, Arizona	31	1,800	2,750	55
Little Rock, Arkansas	19	3,200	2,000	50
Los Angeles, California	41	2,000	550	55
San Francisco, California	35	3,000	<50	55
Denver, Colorado	-2	6,200	650	40
New Haven, Connecticut	5	5,800	200	42½
Washington, D.C.	16	4,200	1,000	45
Miami, Florida	42	200	2,400	61
Atlanta, Georgia	18	3,000	1,400	50
Honolulu, Hawaii	60	---	1,350	---
Boise, Idaho	4	5,800	700	41
Chicago, Illinois	-3	6,600	750	40
Indianapolis, Indiana	0	5,600	750	42½
Des Moines, Iowa	-7	6,600	600	38
Kansas City, Kansas		4,800	1,100	42½
Louisville, Kentucky	8	4,600	1,300	45
New Orleans, Louisiana	32	1,400	1,750	55
Bangor, Maine	-8	8,000	200	37½
Boston, Massachusetts	6	5,600	400	42½
Battle Creek, Michigan	1	6,600	500	40
Duluth, Minnesota	-19	10,000	<50	35
Biloxi, Mississippi	30	1,600	2,050	55
Natchez, Mississippi	22	1,800	1,650	52½
Pascagoula, Mississippi		1,600	2,050	52½
Hannibal, Missouri	-1	5,400	850	45
Billings, Montana	-10	7,000	500	37½
Lincoln, Nebraska	-4	5,800	1,000	40
Las Vegas, Nevada	23	2,800	2,350	51
Concord, New Hampshire	-11	7,400	400	40
Atlantic City, New Jersey	14	4,800	450	46
Alamagordo, New Mexico	18	3,000	1,500	50
Albuquerque, New Mexico	14	4,400	1,150	50
New York, New York	12	5,000	650	45
Durham, North Carolina	15	3,400	1,050	50
Minot, North Dakota	-24	9,600	300	33
Ashtabula, Ohio	3	6,400	400	42½
Shawnee, Oklahoma		3,200	1,500	47½
Salem, Oregon	21	4,800	300	45
Scranton, Pennsylvania	2	6,200	450	42½

TABLE B-2. (CONTINUED)

	Winter Design Temperature	Winter Degree Days	Summer Cooling Hours	Average Heating Season Outdoor Temperature
Wilkes-Barre, Pennsylvania	2	6,200	450	42½
Spartanburg, South Carolina	18	3,000	1,100	52½
Sioux Falls, South Dakota	-14	7,800	500	35
Chattanooga, Tennessee	15	3,200	1,250	50
Abilene, Texas	17	2,600	2,000	52½
Austin, Texas	25	1,800	2,250	52½
El Paso, Texas	21	2,800	1,850	51
Waco, Texas	21	2,000	2,200	52½
Roanoke, Virginia	15	4,200	800	45
Spokane, Washington	-2	6,600	350	42½
Clarksburg, West Virginia	3	5,000	750	46
Madison, Wisconsin	-9	7,800	500	37½
Casper, Wyoming	-11	7,400	550	38

TABLE B-3. INDOOR TEMPERATURE CORRECTION FACTOR

The number of Degree Days per year for an area is equal to the product of the number of days the house is heated times the average temperature difference between indoor and out. However, the latter term is arrived at assuming it is 65° indoors. So, if the structure is to be kept at a temperature other than 65°, annual fuel use or annual fuel use reduction due to a conservation measure must be adjusted by the appropriate multiplicative factor from the table below. For example, if annual fuel use has been found to be 100 x 10^6 Btu and the structure is to be kept at 68° in a region where average heating season temperature is 35°, then the corrected annual fuel use is: 1.1 x (100 x 10^6 Btu = 110 x 10^6 Btu.

	Outdoor Average*				
Indoor	35	40	45	50	55
65	1.00	1.00	1.00	1.00	1.00
66	1.03	1.04	1.05	1.07	1.10
68	1.10	1.12	1.15	1.20	1.30
70	1.17	1.20	1.25	1.33	1.50
72	1.23	1.28	1.35	1.47	1.70
74	1.30	1.36	1.45	1.60	1.90

* Outdoor average heating season temperatures for selected cities are listed in Table B-2.

APPENDIX C

HEAT TRANSMISSION COEFFICIENT (U) REQUIREMENTS

HEAT LOSS OF SELECTED THERMAL DESIGN STANDARDS

ONE AND TWO FAMILY -- STRUCTURES

1) FHA '65:

Total Heat Loss:	50 Btuh/sq ft of total floor area heated to 70°F.
Heat Loss through ceilings:	U = .06 for ceilings with heating panels. U = .15 for ceilings without heating panels.
Heat Loss through slab on grade:	5 Btuh/sq ft of floor area.

2) FHA '73:

Total Heat Loss:	33 Btu/sq ft for a 1,500 sq ft house excluding floor loss.* including floor loss through slab on grade = 37 Btu/ sq ft
Heat Loss through ceilings:	U = .05 for ceilings with heating panels. U = .08 for ceilings without heating panels.
Heat Loss through slab on grade:	42 Btuh per foot of exposed slab edge for unheated slabs. 50 Btuh per linear foot of exposed slab edge for heated slabs.

---

* The FHA '73 standard gives heat loss excluding loss through floor, as a function of floor area.

3) <u>ASHRAE Standard 90-75</u>:

Total Heat Loss:	Not Given. (see below)
Heat Loss through Gross Wall Area:	$U_{gross\ wall}$ = .23 (see below)

For a 1500 sq ft house with 8 ft. ceiling, this gives a heat loss (due to transmission only) of 14 Btuh/sq ft of floor area heated to 70°F.

Heat Loss through Roof and ceiling:	$U_{for\ roof\ and\ ceiling\ combined}$ = .05, except in the case where the underside of the roof is essentially the finished interior surface of the house as with a wooden cathedral ceiling. In this case, $U_{roof\ and\ ceiling}$ = .08.
Heat Loss through slab on grade:	(see below)

R of perimeter insulation = 4.1 for unheated slab, so heat loss per linear foot of perimeter = 32 Btuh.

R of perimeter insulation = 6.3 for heated slab, so heat loss per linear foot of perimeter = 25 Btuh.

<u>Brief Explanations of 1) 2) 3)</u>:

1) Total heat loss is not given in the standard. But we may do a quick calculation to see what heat loss will result from conforming to the standard.

70° temperature difference/1,500 sq ft home/perimeter = 160 ft.
Ceiling height = 8 ft./roof area = 1,740 ft.

Walls	21,000 Btuh
Roof/Ceiling	6,090 Btuh
Floor (unheated slab)	5,120 Btuh
Total Transmission	32,210 = 21 Btuh/sq ft
Infiltration	14,362 Btuh
Total	46,574 = 31 Btuh/sq ft

Infiltration assumptions:

70°F temperature difference
12,000 cu ft volume of air
.95 air exchanges per hour (ASHRAE, A.D. Little)
.018 infiltration coefficient (ASHRAE)

If we assumed a cathedral type roof/ceiling, then the loss through roof/ceiling would be 9,744 Btuh.

The totals would then be:

35,864 Btuh transmission = 24 Btuh/sq ft
50,228 Btuh transmission = 33 Btuh/sq ft

2) U coefficients are given on the basis of number of degree days. Thus they will vary over regions. U=0.23 is the coefficient for an area with 5,000 degree days. The roof and ceiling coefficients are for areas with under 8,000 degree days. For other areas, other coefficients are required.

3) R values of perimeter insulation are given on the basis of degree days. We chose the values for 5,000 degree days. For others, see chart.

MULTI-FAMILY STRUCTURES

1) FHA '65:

For stories of which neither floor nor ceiling is exposed to an unheated space, heat loss = 25 Btuh/sq ft story area.

For stories of which either floor or ceiling is exposed to an unheated space, heat loss = 35 Btuh/sq ft story area.

For stories of which both floor and ceiling are exposed to unheated spaces, heat loss = 45 Btuh/sq ft story area.

Ceilings:	U = .06 for ceilings with heating panels.
	U = .12 for ceilings without heating panels.
Floors -- Heat Loss = (slab on grade)	40 Btuh per linear foot of the slab edge.

2) FHA '73:

Total Heat Loss:	Not Given
Walls: Masonry	U = .05
Frame	U = .05
Ceilings: Masonry Wall	U = .05
Frame Wall	U = .05
Floor, slab on grade	Heat loss = 42 Btuh per linear foot edge (unheated slabs).
	Heat loss = 50 Btuh per linear foot edge (heated slabs).

3) ASHRAE Standard 90-75:

Total Heat Loss:	Not Given
Walls:	$U_{\text{gross wall area}} = .30$
Roof/Ceiling:	U = .05, except for roofs the undersides of which are the finished interior surfaces of the ceiling (wooden cathedral ceilings). In this latter case U may equal .08.
Floor, slab on grade:	$R_{\text{insulation}} = 4.1$ for unheated slabs = 32 Btuh loss per linear foot edge.
	$R_{\text{insulation}} = 6.3$ for heated slab = 25 Btuh loss per linear foot edge.

Note:

Included in ASHRAE Standard 90-75 is a provision which allows for divergence from any of the specific component requirements as long as total heat loss from the resulting structure is no greater than for a structure in which all the specific requirements were met.

The following is a comparison of ASHRAE Standard 90-75 with the FHA 1973 Minimum Property Standards using a 1,500 sq ft single family house.

Basic Construction:

Walls -- Wood Frame, Wood Siding
Roof -- Asphalt Shingle
Floor -- Slab on Grade

	90-75	FHA '73
Total Allowed Heat Loss	none given	55,700 Btuh
Heat Loss/sq ft Living Area	none given	37 Btuh
Allowed Heat Loss by Component		
Through Gross Wall Area	23,760 Btuh	30,000 Btuh
Per sq ft Wall	18 Btuh	23 Btuh
Through Roof/Ceiling	5,400 Btuh	8,640 Btuh
Per sq ft Roof/Ceiling	3.6 Btuh	5.8 Btuh
Through Floor Slab	4,640 Btuh	6,720 Btuh
Per linear foot Slab Edge	29 Btuh	42 Btuh
Total Transmission Loss	33,800 Btuh	45,360 Btuh
Infiltration Loss (.95 air ex/hr)	14,774 Btuh	14,774 Btuh

Total Loss	48,574 Btuh	60,134 Btuh
	32 Btuh	40 Btuh

When considering total heat loss, in the case of FHA '73, it is assumed that the lowest allowed number is the relevant one and so compare the FHA overall allowed loss (rather than the sum of the allowed component losses) with 90-75. So:

	ASHRAE 90-75	FHA '75
Total	48,574 Btuh	55,700 Btuh
Per sq ft	32 Btuh	37 Btuh

Thus conforming to the ASHRAE standards lowers loss by 14 percent.

The following are designs for homes which would conform to each of the standards.

ASHRAE House	FHA '73 House
3 inches wall insulation	1 1/2 inches wall insulation*
6 inches ceiling insulation	3 inches ceiling insulation
single windows	single windows
2 inches slab insulation	1 1/3 inches slab insulation

Heat Loss by Component for Each of the Houses†

	ASHRAE 90-75	FHA '73
wall	5,484	7,834
window	15,621	15,621
roof‡	6,264	10,022
floor	4,000	6,080
infiltration	14,774	14,774
	46,143	54,331
	31 Btuh	36 Btuh

Conforming to ASHRAE standards 90-75 thus lowers heat loss by 14 percent.

---

* About 7,000 Btuh are saved over the allowed component loss thereby bringing the sum of the component and insulation losses in line with the total allowed loss.

† Because of indivisibilities in infiltration, etc., these losses are slightly lower than the allowed.

‡ The roof in this case is assumed to be on a slope so that its area is 1,740 sq ft.

APPENDIX D

RESIDENTIAL SOLID RESIDUALS

In the literature terms like solid wastes, garbage, refuse and rubbish are frequently used interchangeably. We apply the following terminology: Solid residual is the most general expression; it refers to the useless, unwanted, or discarded materials resulting from society's activities, including dewatered sludges from treatment plants, organics from kitchens, fly ash from stack discharges, etc.* We refer to residential solid residuals for all items discarded by residents, and to garbage (organics) as the animal and vegetable waste resulting from handling, preparing, cooking, and serving foods, especially from residential kitchens. Bulky wastes are large items from residential and commercial sources and from public property and vacant lots, which are frequently difficult to handle and therefore require separate collection. Refrigerators, TVs, and mattresses are items of this type from households.

In general, solid residual quantities differ within cities, from city to city, from region to region, and from season to season. The per capita amount collected is affected both by the amount generated, and by the amount of source separation and voluntary recycling, on-site burning, house and apartment incineration, food waste grinding, etc. The per capita amount actually generated by the household depends on the economy, standard of living, size and age structure of family, new products and packaging development, heating system (coal or wood), institutional arrangements (such as scavenger ordinances or container legislations), availability of storage, and behavioral patterns such as number and types of newspapers, magazines and periodicals read, cooking (fresh versus canned, frozen or packaged food), entertainment habits, etc. The per capita quantity of garbage and ashes seems to be decreasing, while the amount of combustible material, especially paper and plastics, is increasing. These trends imply a change in per capita quantity as well as in the composition of residential refuse. Climate can influence the degree of seasonal fluctuations in solid residuals quantity and composition. For example, in the north, combustibles (yard wastes and clean up) account for peaks in the spring, and sometimes also in summer and early fall, while leaves produce yearly peaks of quantity and large shifts in the composition in the period of October to December. Table D-1 indicates the materials which are associated with each major component of residential solid residuals.

The amount of materials actually collected for off-site disposal might be quite different from that generated. Container regulations, recycling of glass, metals, and paper on a voluntary or mandatory basis, on-site

---

* The general definition of residuals is given in Section 1 of the main report (p. 1).

disposal (burning or composting), storage of magazines in basement, etc., will reduce the collection rate for central waste disposal. Open containers might be responsible for increased moisture content during rainy seasons; for example, Partridge and Harrington* showed that high moisture content influences collection time for containers unprotected against rain on the collection day.

TABLE D-1. DESCRIPTION OF RESIDENTIAL SOLID RESIDUALS†

Category	Description
Food wastes	garbage
Glass	bottles (primarily)
Metal	cans, wire, and foil
Paper	various types, some with fillers
Plastics	Polyvinyl chloride, Polyethylene, Styrene, etc., as found in packaging, housewares, furniture, toys, and non-woven synthetics.
Textiles	cellulosic, protein, woven synthetics
Leather, Rubber	shoes, tires, toys, etc.
Wood	wooden packaging, furniture, logs, twigs
Miscellaneous	inorganic ash, stones, dust
Yard wastes	grass, brush, shrub trimmings

† Table 10, in W.R. Niessen and S.H. Chansky, "The Nature of Refuse," Proceedings of 1970 National Incinerator Conference, ASME, 1970.

Because of these factors, there is no single good estimate of per capita generation and collection rate and corresponding composition. Results from various studies of the composition of residential solid residual collection indicate a wide range of percentage weight in the categories which are largely

* Partridge, L.J., and J.J. Harrington, "Multivariate Study of Refuse Collection Efficiency," Journal of Environmental Engineering Division, ASCE, Vol. 100, No. EE4, August 1974, pp. 963-978.

influenced by indoors residuals.* The range of values from the studies which were recorded by the National Center for Resource Recovery, and their average value as calculated by Meta Systems is presented in Table D-2, rows A and B. Unfortunately, most of the original sources were not accessible. But Darnay and Franklin† have characterized some of the sources regarding the origin of residuals (residential or residential and commercial), year and time of year of sampling. All samples cited by Darnay and Franklin were taken between 1966 and 1969, and were composed both of residential and commercial residuals and most samples were taken either in the winter or summer; only one community, Flint, Michigan, was sampled at different seasons. The highest percentage of garbage was encountered in Flint, Michigan, in January, while the lowest one, which was not considered to be influenced by garbage grinders, occurred in Weber County, Utah, in April 1968. The high value in Flint is associated with a relatively low value for paper (21.1 percent),‡ while the low value in Utah is associated with the highest percentage of paper (61.8 percent). The collection in Flint is exclusively a residential collection, while the other is a collection of residential and commercial wastes. Commercial wastes might increase the percentage of paper. Some of the exclusively residential collections, however, also yielded quite high rates.

In addition to the highest proportion of garbage, the highest glass and metal components were also found in Flint, in Jaunary, with 23.2 and 13.2 percent respectively. The same proportion of glass was encountered in Flint in June. The lowest percentages of glass showed up in Weber County, Utah, the place with the lowest garbage component. The lowest proportion of metals is reported in a study of Madison. No other obvious facts could be extracted from information on the glass, metal, and plastic components. In some cases, all three components were relatively high or low, and in some cases they showed contrary trends without any clear pattern.

---

* Resource Recovery from Municipal Solid Waste, National Center for Resource Recovery, Inc., Lexington Books, D.C. Heath and Company, Lexington, Massachusetts, 1974: Table 2-4, "Surveys of the Composition of Municipal Solid Waste in the U.S."; and, W.R. Niessen and S.H. Chansky, "The Nature of Refuse," Proceedings of the 1970 National Incinerator Conference, May 17-20, 1970, New York, American Society of Mechanical Engineers, p. 14.

† Darnay, A., and W.E. Franklin, "Salvage Markets for Materials in Solid Wastes," Study prepared by Midwest Research Institute, U.S. EPA, SW-29c, 1972.

‡ This might partially be explained by the practice of backyard burning in Flint, Michigan (see, Thomas H.E. Quimby, "Recycling - The Alternative to Disposal," The Johns Hopkins University Press, Baltimore, 1975).

TABLE D-2. COMPONENTS OF SOLID RESIDUALS GENERATED INDOORS
(by percentage weight)

Source		Food	Misc.	Glass	Metals: Ferrous	Metals: Non-Ferrous	Paper	Plastics	Textile	Rubber/ Leather	Wood
A	L	8.5	.2	4.6	5.4	.3	13.0	.3	.3	.3	.3
	H	36.0	2.0	23.2	13.2	1.3	61.8	3.8	8.9	4.7	6.6
B		17.6	1.1	10.3	7.9*	.9	42.7	1.7	2.4	1.8	2.5
C	Mean	19.3		9.9	10.2		51.6	1.4	2.7	1.9	3.0
	SD	10.95		4.37	2.18		11.67	.96	1.8	1.62	2.39
	CV	.57		.44	.21		.23	.69	.67	.85	.8
	95% confidence interval:	4.73		1.89	.93		5.04	.74	.93	1.25	1.06
	# of samples:	23		23	23		23	9	17	9	22
D	L	22.7		11.3	8.4		34.4		1.1	1.6	.12
	H	27.2		14.5	10.2		46.4		3.0	2.8†	.67

* Average of 8.8 was assumed for all metals. † Including plastics.

A. Range extracted from Table 2-4, Resource Recovery from Municipal Solid Waste, op. cit., p. 13.

B. Average percentages from A (not adjusted to 100%).

C. Table 2, in W.R. Niessen and S.H. Chanski, op. cit. (note: some samples of A are contained in C).

D. Davidson, G.R., "A Study of Residential Solid Waste Generated in Low-Income Areas," U.S. Environmental Protectional Agency SW-83ts, 1972; Summary of Table 5 describing components in percentage for three routes.

Legend · L = low value of range; H = high value of range;
SD = standard deviations; CV = coefficient of variation

It is questionable whether the data for Flint can be used to hypothesize general tendencies. The sample size is too small, and none of the other important characteristics of the area are known. One could argue, for example, that if the metal and bottle generation rate is high, a relatively low garbage generation rate should be expected; a large number of glass containers for soft drinks and beer should cause a relatively low number of metal containers for these products; a high rate of both metals and glass is probably caused by the number of metal containers for food products, which in turn should imply a low garbage rate.

Row C reflects the data analysis performed by Niessen and Chansky. The relatively small coefficients of variation indicate that the average figures might be reasonable first estimates of a community's solid waste composition by weight. Row D of Table D-2 reflects results from sampling of composition in low income areas of Cincinnati. The range of values, derived from the average composition of three routes of mixed housing (single family and multi-family dwellings and apartment buildings) sampled over a period of three weeks, was presented for the purpose of comparison. All values fall well into the established ranges.

Table D-3 indicates the change of the composition over the yearly seasons. The variation is very much influenced by the complementary changes of the paper and the non-fiber organics component. The portion of yard wastes including grass clippings, leaves, etc. is largely dependent on local and regional characteristics. In order to utilize the figures of Table D-3, they have to be converted to absolute amounts of waste. The available sources did not give the total weights for every sample so that relations between changing composition and actual weight cannot be established from these data. It is difficult to make reasonable assumptions regarding an appropriate daily per capita generation rate which could be used to derive ranges for daily per capita generation of the various components from the data on proportions. Due to the lack of good data on average daily per capita generation, figures were estimated from a nationwide materials flow analysis of residential solid residuals by the resource recovery division of the Office of Solid Waste Management Programs.* Values are reported on an "as-generated" and on "as-disposed" weight basis. The difference between the two estimates is caused by the exchange of moisture from food residuals to paper products.† Niessen and Chansky's estimates of moisture content‡ in municipal solid wastes "as discarded" and "as disposed" basis were used to calculate the corresponding

---

* Smith, F.L., "A Solid Waste Estimation Procedure: Material Flows Approach, U.S. Environmental Protection Agency, SW-147, May 1975.

† Estimates of the waste "as generated" imply an "air dry" moisture content of paper products at seven percent (industry assumes six percent); glass and metals at zero; and the remaining materials at 3-15 percent. The total waste flow is estimated to contain about 26 percent moisture overall.

‡ Niessen, W.R. and S.H. Chansky, op. cit.

daily per capita generation rates.* These two figures were assumed to be reasonable base estimates for calculating the range of generation rates in each category for the case of disposal by mixed waste, garbage grinder, and separate garbage bins. The following figures are used (see Table D-4): for combined disposal, the "as disposed" weight figures,† and for disposal by garbage grinder the "as generated" weight figures of the non-food residuals

TABLE D-3. SEASONAL VARIATION OF REFUSE COMPOSITION: FRANKLIN, OHIO

	SORT DATES			
CATEGORY	Spring 4/10-4/18/74	Fall 9/17-9/23/74	Winter 12/16/12/ /74	Average
Paper	33.8	37.34	49.4	40.1
Newspaper	6.83	13.48	12.1	10.8
Corrugated	2.5	5.80	4.9	4.4
Magazines	1.5	2.17	1.3	1.7
Strong Paper	3.86	3.71	3.8	3.8
Mixed Paper	19.12	12.18	27.3	19.5
Inert	2.5	5.18	2.4	3.4
Glass	9.7	7.94	8.0	8.5
Metals	10.7	11.88	10.7	11.1
Magnetic	10.05	10.10	9.3	9.8
Non-Magnetic	.62	1.78	1.4	1.3
Non-fiber organics	44.2	37.39	29.5	37.0

* Values in percent.

Source: U.S. Environmental Protection Agency, A Technical, Environmental, and Economic Evaluation of the Wet Processing System for the Recovery and Disposal of Municipal Solid Waste (Sw-109C), 1975.

* See Niessen, W.R. and S.H. Chansky, op. cit.

† Smith's figures were slightly changed by eliminating the moisture transfer from yard wastes to paper, which was assumed to be a quarter of the moisture accumulation in paper.

plus a small amount of garbage which is not disposed of through the grinder. This garbage is assumed to transfer no moisture to the paper component.*

TABLE D-4. MATERIAL-FLOW ESTIMATES OF RESIDENTIAL SOLID RESIDUAL GENERATION (lbs/cap/day)*

	"As Generated" Weight-Basis	"As Disposed" Weight-Basis
Paper	0.61	0.67
Glass	0.29	0.29
Metals	0.19	0.19
Plastics	0.08	0.09
Rubber & Leather	0.03	0.03
Textiles	0.03	0.03
Miscellaneous	0.02	0.02
Subtotal: Non-Food	1.25	1.32
Food Waste	0.47	0.40
Total: Non-Bulky Product Waste	1.72	1.72

* Based on data of Smith F.A. and F.L. Smith, Resource Recovery Division, Office of Solid Waste Management Programs, February 1974.

* One-fourth of food waste ("as generated" weight) is believed to reflect these items resulting in .12 lb/cap/day; for example, McKinney and J.L. Mahloch state that 3/4 of the total garbage can easily be ground up ("The Economic Evaluation of Garbage Grinding vs. Surface Collection and Disposal," Water and Sewage Works, 1971.)

The range of daily per capita generation rates was calculated by assuming that the average value of the percentage weight of each component (Table D-2, Row B) agrees with the average generation rate of each component, as calculated in Table D-4.* The resulting ranges are shown in Table D-5. The underlying assumption for the calculations provides an operational way of deriving the ranges in absolute values, even though the resulting ranges are biased. Collection values reported by Rhyner† match very well with our figures.

---

* We chose to use the average values, calculated by Meta Systems, instead of Niessen and Chansky's values because we felt more comfortable with our own derivations.

† Rhyner, C.R., Domestic Solid Waste and Household Characteristics, Waste Age, April 1976.

TABLE D-5. RANGES OF GENERATION RATES FOR EACH COMPONENT OF RESIDENTIAL SOLID RESIDUALS (kg/cap/day)

		Organics	Paper	Glass	Metals	Plastics	Rubber Leather	Textiles	Misc.	Total
Combined Storage and Disposal	L	.08	.09	.06	.06	.01	.005	.005	.002	.31
	H	.37	.44	.29	.14	.09	.04	.05	.02	1.44
Separated Storage and Disposal	L	.09	.08	.06	.06	.01	.005	.005	.002	.31
	H	.43	.40	.29	.14	.09	.04	.05	.02	1.44
Organics Disposed of by Grinder	L	.02	.08	.06	.06	.01	.005	.005	.002	.24
	H	.11	.4	.29	.14	.09	.04	.05	.02	1.13
*Wisconsin Urban	M	.114	.198	.122	.075	.025			.046	.58
	SD	.09	.123	.093	.104	.03			.088	.245
*Wisconsin Rural	M	.114	.15	.078	.059	.02			.045	.466
	SD	.090	.105	.056	.064	.033			.103	.212
*Southern State Urban	M	.139	.218	.099	.097	.03			.058	.641
	SD	.13	.157	.076	.114	.039			.093	.276
*Southern State Rural	M	.132	.171	.091	.092	.028			.054	.568
	SD	.14	.138	.067	.116	.042			.087	.265

* Rhyner, C.R., op. cit.

Legend: L = low
H = high
M = mean
SD = standard deviation

Appendix E

CALCULATION OF BASELINE USE AND GENERATION ESTIMATES

In this appendix examples are presented which illustrate the procedure used to calculate the baseline resource use and residuals generation estimates. The computations for the energy use and gaseous residuals baselines are explained first. The water use and liquid residuals estimates are discussed next and the solid residuals estimating procedure is presented last, All of the examples are taken from the "single family house" high baseline.

In Table E-1 some of the general characteristics of the baseline are listed. The size of the structure (1500 square feet of living space) and its

---

TABLE E-1. GENERAL CHARACTERISTICS OF BASELINE "SINGLE FAMILY HOUSE"

Structure Type: One-story detached; no basement; 1,500 square feet

Lot Size: 1/4 acre

Location: Southern New England (5,000 degree days/year; average outdoor heating season temperature 45°F; 400 cooling hours/year; average outdoor cooling season temperature 85°F)

Size of Household: 4 persons (2 adults and 2 children)

---

location (Southern New England) influence the energy requirement. The lot size (1/4 acre) and the number of occupants influence the water use and solid residuals generation and to some extent energy use--particularly through the volume of hot water used. In addition to these general characteristics, specific features which have direct effects on energy or water use and residuals generation are attributed to structure in the context of the relevant baselines.

ENERGY AND GASEOUS RESIDUALS

Each of the household functions and the features which determine its energy use appear in Table E-2. The actual steps of the estimating procedure follow:

TABLE E-2. SPECIFIC ENERGY USE CHARACTERISTICS

Heating

Built to FHA '65 heat loss specifications; gas forced-air heating; 65 percent efficiency; thermostat setting of 72°F (no reduction overnight); all rooms are heated all the time.

Cooling

Central cooling system; thermostat setting of 75°F; (65 percent efficiency).

Water Heating

Central supply and storage system; gas furnace with pilot light; 50 gallon storage tank; inlet temperature of 60°F; outlet temperature of 140°F; and ambient air temperature 70°F.

Kitchen

Appliances include a self-cleaning gas range (stove/oven) with pilot light, refrigerator (frost-free feature), separate freezer (frost-free feature), dishwasher, and other appliances.

Washing/Cleaning

Washing machine, electric dryer, and miscellaneous small appliances are available; washing machine and dryer are each run once a day on the average.

Bathroom

Miscellaneous small energy using devices (e.g. hair dryer, electric toothbrush).

Living/Entertainment

Color TV (with instant-on feature) and radio/stereo equipment.

1. Heating:

   a. For a one-story single family house built to FHA '65 specifications the heat loss is 17.1 Btu/sq ft/Degree Day (See Table 8)

   b. Annual heat loss: 1,500 sq ft x 5,000 Degree Days/Year x 17.1 = 128.2×10^6 Btu/year;

   c. To correct for a furnace efficiency of 65 percent the total Btu figure is divided by .65

$$(1/.65) \times 128.2 \times 10^6 = 197.2 \times 10^6 \text{ Btu of fuel/year;}$$

   d. The correction factor for an indoor thermostat temperature of 72° in a region where the average outdoor temperature is 45° is equal to 1.35*. So, $1.35 \times 197.2 \times 10^6 = 266.4 \times 10^6$ Btu of fuel/year

(The fuel requirement is equivalent to 256,200 cubic feet of gas assuming 1,040 Btu/cu ft).

2. Cooling:

   a. The cooling load is 31 Btu/sq ft/cooling hour/or an outdoor temperature of 85°F (See Table 9)

   b. Annual cooling load: 1,500 sq ft x 400 cooling hours x 31.0 = 18.6×10^6 Btu/yr

   c. For an efficiency of .65; $(1/.65) \times 18.6 \times 10^6 = 28.6 \times 10^6$ Btu/yr.

(The requirement is equivalent to 8.38×10^3 kwh/yr.)

3. Water Heating:

   a. It is assumed that the outlet temperature (OT) is 140°F. However, the temperature (T) for hot water uses (X_2) varies and an equivalent water use (@ 140°F) (X_1) has to be calculated, given an inlet temperature (IT) of 60°F. The following expression is used:

$$X_1 \ (OT-IT) = X_2 \ (T-IT)$$

$$X_1 = X_2 \left(\frac{T - IT}{OT - IT}\right)$$

We assume the following amounts of water are used (X_2) at the temperatures given in the second column. The equivalent amounts of water at 140°F appear under X_1.

* See Table B-3, Indoor Temperature Correction Factor, Appendix B, page B-7.

	X_2 (gal/day)	T(°F)	X_1 (gal/day)
Dishwasher	16	140	16
Bathing	60	100	30
Sinks (B,K)	24	100	12
Washing	45	120	30
Miscellaneous	10	100	5
Total	155		93 gal/day

b. The standby heat loss is calculated using the coefficients which appear in Table E-3. For a tank of 50 gallons and a conversion loss of 30%, the coefficient is .73. Assuming the temperature difference between the water and the ambient air is 70°F:

(.73 Btu/gal/day/ΔT) x 70°F x 93 gal/day = 4,752 Btu/day

c. The energy requirement to heat the water is:

93 gal/day x (140°F - 60°F) x 8.34 Btu/gal = 62,050 Btu/day

d. Assuming a conversion efficiency of 70% (as above) and assuming the pilot uses 9,600 Btu/day and provides some heat (conversion efficiency of .5) the total energy requirement for one year is

$$305[(4{,}752 \text{ Btu/day} + 62{,}050 \text{ Btu/day} - .5\ (9{,}600 \text{ Btu/day}))/.7 + 9{,}600]$$
$$= 35.8 \times 10^6 \text{ Btu/yr.}$$

TABLE E-3. STANDBY HEAT LOSS COEFFICIENTS (ASHRAE)
(Btu/gal/ΔT where ΔT is the difference in °F between the ambient temperature and the water temperature)

	Tank size (gallons)				
Conversion Loss (%)	50	55	60	65	70
30	.73	.71	.70	.69	.68
35	.79	.77	.76	.75	.74
40	.86	.84	.82	.81	.80

4. Lighting:

a. Appendix A indicates a range of 500-1,750 kwh/year (1.4-4.8 kwh/day). A consumption at the high end has been assumed: 4.8 kwh/day.

b. This is equivalent to approximately 6×10^6 Btu/yr.

5. Kitchen:

Table 13, 14 and 38* are used to derive the energy consumption of kitchen appliances. It was assumed that the values at the upper bound would reflect the high use case:

	Million Btu/year
dishwasher (except water heating)	1.2
refrigerator (frost-free w/anti-condensation heater)	4.4
separate freezer (frost-free w/anti-condensation heater)	5.0
others	1.5
Subtotal	12.1
self-cleaning gas range (stove/oven) with a pilot light whereby the pilot light uses about 6,000 Btu/day	4.8
Total	16.9

6. Washing/Cleaning:

Table A-17 (Appendix A, page A-44) contains values of energy consumption on an event basis. We had assumed one use per day.

	10^6 Btu/yr
Automatic Washing Machine (20 gallons) (excluding energy consumption for hot water)	.5
Electric Dryer	7.5
Miscellaneous	.3
Total	8.3

7. Bathroom (see Table A-30; Appendix A, page A-64)

Miscellaneous: approximately 0.1 x 10^6 Btu/yr.

8. Living/Entertainment: (see Table A-32)

	kwh/year	10^6 Btu/yr
Color TV with instant-on feature	525	1.8
Radio/Stereo	150	.5
Miscellaneous (such as hobbies)	100	.3
	775 kwh/yr =	2.6

9. Outdoors & Maintenance:

No consumption.

These estimates comprise the high energy use baseline in Section 7 (main report).

---

* See main report, pp. 33, 35, and 74.

The gaseous residuals are computed using the ratios in Table A-5 and the energy requirements (in cu ft of gas) for heating, water heating, and the kitchen range. The residuals (in lbs/yr) are:

	Particulates	SO_2	SO_3	CO	Hydrocarbons	NO_2
Heating	2.6	0.2	-	5.2	2.1	20.6
Water Heating	0.3	-	-	0.7	0.3	2.7
Kitchen range	-	-	-	0.1	-	0.4
Total (pounds/yr)	2.9	0.2	-	6.0	2.4	23.7

These estimates become part of the high baseline in Section 7.

WATER AND LIQUID RESIDUALS

The household characteristics which influence water use and liquid residuals generation appear in Table E-4. It is assumed that the residence has a garbage grinder, dishwasher, washing machine, and two bathrooms. The garbage grinder and dishwasher are used twice a day and the washing machine once a day. The residence has a large lawn (8500 sq ft) which is watered through the spring and summer.

TABLE E-4. SPECIFIC CHARACTERISTICS FOR WATER USE AND LIQUID RESIDUALS BASELINE.

High Water Use

Kitchen	Bathroom	Other
-sink -garbage grinder (2 uses/day) -dishwasher (2 loads/day)	-two bathrooms, first with tub and shower, second with shower only. Each with conventional toilet (6 gallon tank) and sink	-washing machine (one load/day) -8500 sq ft of lawn -car washed once every month

The following water use figures are estimated on the basis of ranges of water consumption found in the studies reviewed in Section 5 and Appendix A and the specified frequencies of use presented below:

	Frequency of Use (times/day)	Quantity per Use (gallons)	Total Water Use (gallon/yr)
Kitchen			
sink	12	2	8,760
garbage grinder	2	6	4,380
dishwasher	2	16	11,680

(FIGURES CONTINUED ON NEXT PAGE)

(FIGURES CONTINUED)

	Frequency of Use (times/day)	Quantity per Use (gallons)	Total Water Use (gallon/yr)
Bathroom			
toilet	20	6	43,800
bathing	2	30	21,900
sink	6	2	4,380
Cleaning			
washing machine	1	45	16,425
miscellaneous	-	-	3,650
Subtotal			114,975
Outdoor			
Lawn (assume .25 inches of water/week for 22 weeks)			29,200
Car wash (assume once every 4 weeks and 40 gallons)			3,650
Subtotal			32,850
Total			147,825

The estimates of liquid residuals for inclusion in the baseline are again taken from the studies reviewed in Section 5 and Appendix A. They coincide with the water use figures above and are within the range of the per capita or per event generation rates reported in these studies. Also, we make the assumption that, with the exception of lawn watering, water is not consumed in use. The hydraulic waste load is equivalent to the total water used. The daily and annual liquid residuals estimates are in Table E-5. These estimates appear as the high water use and liquid residuals baseline in Section 7.

SOLID RESIDUALS

Factors which influence the generation of solid residuals appear in Table E-6. The estimates are based on the figures in Table A-13. The upper range is used for all components (e.g., paper, glass, metal, etc.) all except food waste because of the presence of a garbage grinder. We assume that 95 percent of food waste is disposed of using the grinder. The daily per capita rate by component is:

TABLE E-5. LIQUID RESIDUALS
(lbs/year)

	BOD_5	SS	TN	TP	Grease and Oil
Kitchen					
-sink	2.92	7.7	1.5	1.5	-
-garbage grinder	116.8	131.4	1.5	1.5	-
-dishwasher	21.9	8.8	1.5	3.0	-
Bathroom					
-toilet	43.8	65.7	29.2	4.4	-
-bathing	14.6	8.8	1.5	-	-
-sink	14.6	13.1	-	-	-
Cleaning					
-washing machine	37.2	7.5	1.5	.4	-
Maintenance					
-carwash	.1	.8	-	-	-
Total	278.2	243.8	36.7	7.8	.2

TABLE E-6. FACTORS INFLUENCING THE GENERATION OF SOLID RESIDUALS

Administrative

- grinder ordinance
- factor price (paper good but variable, aluminum 17¢/lb)
- separate collection newspaper (1/month) (a little unreliable; no good advertisement)

Physical

- no compost heap for garden waste
- recycling center available (but only on voluntary participation except for newspaper)

Behavioral

- family eats regularly at home; typical food being a mixture of fresh and precooked meals
- all organics are ground by garbage grinder (if possible)
- non-returnable beer and soft drink cans
- regular local morning newspaper (not very big); Sunday newspaper
- Occasional separation of newspaper (1/3 month). If they are not picked up they get thrown away with regular collection.

	kg/cap per day
Food	0.02
Paper	0.40
Glass	0.29
Metals	0.14
Miscellaneous (plastic, rubber, leather, etc.)	0.20
Garden	0.23
	1.28

We assume now that 40 percent of the paper component (.16 kg/cap/day) is newspaper and that one third of the used newspaper is recycled. The generation rate is then 1.28 - (.16 x 1/3) = 1.23 kg/cap/day. On an annual basis for a family of four the solid residuals are 1,795 kg. This is the estimate used in the high baseline. The component figures appear in Table E-7. With the solid residuals estimates the resources and residuals baselines are complete.

TABLE E-7. HIGH BASELINE SOLID RESIDUALS BY COMPONENT

Component	Generation Rate (kg/yr)
Food	29
Paper	511
Glass	423
Metals	204
Miscellaneous	292
Garden	336
Total	1795

TECHNICAL REPORT DATA
(Please read Instructions on the reverse before completing)

1. REPORT NO. EPA 600/5-79-005	2.	3. RECIPIENT'S ACCESSION NO.
4. TITLE AND SUBTITLE Resource Use and Residuals Generation in Households		5. REPORT DATE March 1979
		6. PERFORMING ORGANIZATION CODE
7. AUTHOR(S) J. Kuhner, D.F. Luecke, M. Shapiro		8. PERFORMING ORGANIZATION REPORT NO.
9. PERFORMING ORGANIZATION NAME AND ADDRESS Meta Systems, Inc. 10 Holworthy Street Cambridge, MA 02138		10. PROGRAM ELEMENT NO. 1HC619
		11. CONTRACT/GRANT NO. 68-01-2622
12. SPONSORING AGENCY NAME AND ADDRESS U.S. Environmental Protection Agency Office of Research & Development (RD-682) Washington, D.C. 20460		13. TYPE OF REPORT AND PERIOD COVERED
		14. SPONSORING AGENCY CODE EPA/600 (ORD)

15. SUPPLEMENTARY NOTES

16. ABSTRACT

This report describes, for households, resource use (energy and water only), the generation of liquid, solid and gaseous residuals (other energy residuals are not discussed, e.g., heat, noise, etc.), potential conservation measures and the direct costs, to the household, associated with these measures. This study focuses on nine major household functions and associated activities and their relative importance for resource use and residuals generation. In considering conservation measures, attention is focused on new structures and factor prices are assumed fixed. The household activities are organized by function, and the behavioral, physical and institutional factors which influence energy and water use and the residuals generation are identified. The relevant literature is critically reviewed to provide a basis for estimating use and generation rates and for assessing the influence, where possible, of the factors on these rates. Conservation measures and estimates of their performance and cost are presented. Resource use and residuals generation rates and conservation measures are brought together in the context of the factors which influence them, by utilizing two baselines or benchmarks developed for single family residences. Conservation measures are imposed on the baselines, direct costs to the households are calculated and the relative attractiveness of the measures is determined.

17. KEY WORDS AND DOCUMENT ANALYSIS

a. DESCRIPTORS	b. IDENTIFIERS/OPEN ENDED TERMS	c. COSATI Field/Group
*Residuals Generation, *Resource Conservation, *Planning, Urbanization, Local Government	*Institutions, *Environmental Control, Institutional Constraints	6E

18. DISTRIBUTION STATEMENT Release to Public	19. SECURITY CLASS (This Report) Unclassified	21. NO. OF PAGES
	20. SECURITY CLASS (This page) Unclassified	22. PRICE

EPA Form 2220-1 (9-73)

☆ U.S. GOVERNMENT PRINTING OFFICE: 1979 -281-147/29