EPA/600/2-88/003
January 1988

PB88-160379

CONTROL TECHNOLOGY OVERVIEW REPORT: CFC EMISSIONS FROM RIGID FOAM MANUFACTURING

by:

K.P. Wert, T.P. Nelson, and J.D. Quass
Radian Corporation
Austin, Texas 78720

EPA Contract No. 68-02-3994
Work Assignment 66

EPA Project Officer:

N. Dean Smith
Air and Energy Engineering Research Laboratory
Office of Environmental Engineering and Technology Demonstration
Research Triangle Park, NC 27711

AIR AND ENERGY ENGINEERING RESEARCH LABORATORY
OFFICE OF RESEARCH AND DEVELOPMENT
U.S. ENVIRONMENTAL PROTECTION AGENCY
RESEARCH TRIANGLE PARK, NC 27711

TECHNICAL REPORT DATA
(Please read Instructions on the reverse before completing)

1. REPORT NO EPA/600/2-88/003	2.	3. RECIPIENT'S ACCESSION NO. PB88 160379/AS
4. TITLE AND SUBTITLE Control Technology Overview Report: CFC Emissions from Rigid Foam Manufacturing		5. REPORT DATE January 1988 6. PERFORMING ORGANIZATION CODE
7. AUTHOR(S) K. P. Wert, T. P. Nelson, and J. D. Quass		8. PERFORMING ORGANIZATION REPORT NO.
9. PERFORMING ORGANIZATION NAME AND ADDRESS Radian Corporation P. O. Box 9948 Austin, Texas 78720		10. PROGRAM ELEMENT NO. 11. CONTRACT/GRANT NO. 68-02-3994, Task 66
12. SPONSORING AGENCY NAME AND ADDRESS EPA, Office of Research and Development Air and Energy Engineering Research Laboratory Research Triangle Park, NC 27711		13. TYPE OF REPORT AND PERIOD COVERED Task Final; 3/86 - 11/86 14. SPONSORING AGENCY CODE EPA/600/13

15. SUPPLEMENTARY NOTES AEERL project officer is N. Dean Smith, Mail Drop 62B, 919/541-2708.

OCLC# 8418073396

16. ABSTRACT The report estimates total chlorofluorocarbon (CFC) emissions from the various rigid foam manufacturing processes and from the foam products themselves, and examines potential methods for reducing these emissions. Options studied include replacement of CFC-blown products with alternative products not requiring CFCs, replacement of ozone-depleting CFCs with other chemicals less likely to destroy stratospheric ozone, and recovery/recycle of CFCs released during manufacturing processes. In the production of rigid cellular foams, CFCs are used as physical blowing agents to reduce foam density and impart thermal insulating properties. Such rigid foams include polyurethane, polyisocyanurate, polystyrene, polyethylene, polypropylene, polyvinyl chloride, and phenolic foams. Uses of these foams include building insulation, packaging materials, and single-service dinnerware. Depletion of stratospheric ozone through action of halocarbons, particularly CFCs, has been the subject of extensive study and wide debate. Although many uncertainties remain, current scientific evidence strongly suggests that anthropogenic CFCs could contribute to depletion of the stratospheric ozone layer as was first postulated in 1974.

17. KEY WORDS AND DOCUMENT ANALYSIS

a. DESCRIPTORS	b. IDENTIFIERS/OPEN ENDED TERMS	c. COSATI Field/Group
Pollution	Pollution Control	13B
Foam Rubber	Stationary Sources	11J
Manufacturing	Rigid Foams	05C
Halohydrocarbons	Chlorofluorocarbons	07C
Ozone	Stratospheric Ozone	07B

18. DISTRIBUTION STATEMENT Release to Public	19. SECURITY CLASS *(This Report)* Unclassified	21. NO. OF PAGES 199
	20. SECURITY CLASS *(This page)* Unclassified	22. PRICE

EPA Form 2220-1 (9-73)

NOTICE

This document has been reviewed in accordance with U.S. Environmental Protection Agency policy and approved for publication. Mention of trade names or commercial products does not constitute endorsement or recommendation for use.

ABSTRACT

Over the past decade, depletion of stratospheric ozone through the action of fully-halogenated hydrocarbons (halocarbons) has been the subject of extensive study and wide debate. Current evidence suggests that such man-made halocarbons could contribute to depletion of the stratospheric ozone layer, although many scientific uncertainties remain. A family of halocarbons known as chlorofluorocarbons (CFCs) are the primary suspects in ozone depletion theory.

In the production of rigid polymer foams, CFCs are used as physical blowing agents. Rigid plastic foams include polyurethane, polystyrene, polyethylene, polypropylene, polyvinyl chloride, and phenolic foams.

This report estimates the total CFC emissions from various types of rigid foams, with emphasis on polyurethane and polystyrene foams, and suggests methods for reducing these emissions. A potential method for reducing CFC emissions would be substitution of CFC-blown rigid foams with non-CFC containing products. A second method involves replacing ozone depleting CFC blowing agents with low ozone depleting blowing agents. A final alternative would be to capture CFCs emitted during the manufacturing process. The effectiveness of each of these alternatives is discussed.

CONTENTS

Section		Page
1.	Project Description	1
	Background	1
	Project Objectives	4
2.	Summary of Results	6
	Rigid Polyurethane and Polyisocyanurate Foams	6
	Nonpolyurethane Foams	14
	Controls Likely to be Adopted by Industry	23
3.	Industry and Emission Profile	39
	Overview of Rigid Foam Manufacture	39
	Rigid Foam Industry Profile	45
	CFC Emissions Characteristics	64
	Characterization of World CFC Emissions from Rigid Foams	72
4.	Description of Current Process Technology	74
	Rigid Polyurethane Foam Production	74
	Rigid Polystyrene Foam Production	82
5.	Control/Recycle Technologies for CFC-12 in Polystyrene Foam Sheet Manufacturing	87
	Carbon Adsorption and Steam Desorption Systems	87
	Incineration of Plant Exhaust	110
6.	Hydrocarbons as Polystyrene Foam Sheet Blowing Agents	112
	Plant Equipment and Operation Modifications	113
	Control Effectiveness	114
	Cost of Control	115
	Health and Safety Factors	121
	Current Status	121
	Economic Factors	123
	Barriers to Implementation	124
7.	Alternative CFC Blowing Agents	126
	Rigid Polyurethane Foam Blowing Agents	127
	Polystyrene Foam Blowing Agents	136
	Polyolefin and Phenolic Foam Blowing Agents	145
8.	Substitutes for Current Rigid Foam Products	153
	Alternatives to CFC Blown Rigid Polyurethane Foam Products	153
	Alternatives to CFC Blown Polystyrene Foam Products	172
	Alternatives to Other CFC Blown Foam Products	180

Preceding page blank

CONTENTS (Continued)

Section		Page
9.	Additional CFC Control Methods	182
	Recovery of CFC-11 Upon Product Disposal	182
	Use of Non-CFC, Non-Hydrocarbon Blowing Agents for Nonpolyurethane Foams	184
REFERENCES		186

FIGURES

Number		Page
4-1	Laminated foam boardstock	75
4-2	Foam injection operation	77
4-3	Sprayed-foam operations	79
4-4	Rigid polyurethane bunstock foam line	81
4-5	Flow diagram of a typical polystyrene foam sheet manufacturing process	84
5-1	Schematic flow diagram of typical carbon adsorption/solvent recycle process	89
5-2	Schematic flow diagram for polystyrene foam sheet model plant	98
5-3	Proposed CFC-12 carbon adsorption/recovery system for a polystyrene foam sheet extrusion plant	101
5-4	CFC-12 adsorption on BPL® activated carbon	102
8-1	Typical residential wall construction. Basic wall with siding (top). Basic wall with brick veneer (bottom)	162
8-2	Insulative contribution of individual wall components	163
8-3	R-values per inch for various materials (at 24°C (75°F) mean temperature)	164
8-4	Equivalent thicknesses for various materials (at 24°C (75°F) mean temperature)	167

TABLES

Number		Page
2-1	Summary of Alternative Products as CFC Emission Control Options in Rigid Polyurethane Foam Manufacture	9
2-2	Summary of Low Ozone Depleting CFCs as a CFC-11 Emissions Control Option in Rigid Polyurethane Foam Manufacture	13
2-3	Summary of Alternative Blowing Agents for CFC-12 Emissions Control in Polystyrene Foam Sheet Manufacture	16
2-4	Summary of Add-on CFC Emissions Control Options in Polystyrene Foam Sheet Manufacture	19
2-5	Summary of Alternative Products as CFC Emission Control Options in Polystyrene Foam Manufacture	20
2-6	Controls Likely to be Adopted for Rigid Polyurethane Foam Bunstock and Laminated Board	25
2-7	Controls Likely to be Adopted for Rigid Polyurethane Poured and Sprayed Foams	27
2-8	Controls Likely to be Adopted for Rigid Extruded Polystyrene Foam Boardstock	32
2-9	Controls Likely to be Adopted for Rigid Extruded Polystyrene Foam Sheet	33
2-10	Controls Likely to be Adopted for Other Rigid Nonpolyurethane Foams	35
3-1	Nonpolyurethane Foams and Corresponding CFC Blowing Agents and Mixtures	46
3-2	Historical and Projected United States Rigid Polyurethane Foam Production: 1955 - 2015	47
3-3	Major Producers of Rigid Polyurethane Foam Products	48
3-4	Major Suppliers of Polyurethane Liquid Foam Systems	52
3-5	1985 Rigid PU Foam Production and CFC Consumption in the U.S.	55

TABLES (Continued)

Number		Page
3-6	Polystyrene Foam Sheet, Film, Board, and Block Producers Including Extruders	56
3-7	1985 Estimated Consumption of CFC Blowing Agents for the Manufacture of Polystyrene Foam	62
3-8	Estimated CFC Non-Weighted Consumption & Emissions from Rigid PU Foam Production in the U.S.	66
3-9	Estimated CFC-11 and CFC-12 Emissions From Manufacture and Use of Rigid Polyurethane Foams in the U.S.	69
3-10	Estimated Half-Lives of CFC in Rigid Nonpolyurethane Foam	68
3-11	Estimated CFC-12 Emissions From Manufacture and Use of Extruded PS-Foam Boardstock in the U.S.	71
4-1	Summary of CFC Emission Sources and Example Distribution in Polystyrene Foam Manufacturing	85
5-1	CFC Emission Sources in PS-Foam Sheet Manufacture	91
5-2	Model Polystyrene Extruded Foam Sheet Plant Operating Parameters.	97
5-3	Polystyrene/CFC Material Balance	100
5-4	Carbon Adsorption System Design Parameters	104
5-5	Estimated Capital Costs for Equipping a PS-Foam Sheet Extrusion Plant with a CFC-12 Carbon Adsorption System	106
5-6	Estimated Annual Operating and Maintenance Costs for Equipping a PS-Foam Sheet Extrusion Plant with a CFC-12 Carbon Adsorption System	107
6-1	Model Polystyrene Extruded Foam Sheet Plant Operating Parameters	116
6-2	Estimated Capital Costs for Equipping a PS-Foam Sheet Extrusion Plant with a Pentane Blowing Agent System	117
6-3	Estimated Operating and Maintenance Costs for Equipping a PS-Foam Sheet Extrusion Plant with a Pentane Blowing Agent System	118

TABLES (Continued)

Number		Page
6-4	Estimated Capital Costs for a PS-Foam Sheet Extrusion Plant with a Carbon Adsorption System for Pentane Recovery	119
6-5	Estimated Operating and Maintenance Costs for Equipping a PS-Foam Sheet Extrusion Plant with a Pentane Carbon Adsorption System	120
6-6	Physical Properties of CFC-12 and Hydrocarbon Blowing Agents	122
7-1	Evaluation Factors for Substitute Rigid Polyurethane Foam Blowing Agents	135
7-2	Evaluation Factors for Substitute Polystyrene Foam Blowing Agents	144
7-3	Evaluation Factors for Substitute Polyolefin Foam Blowing Agents.	151
7-4	Evaluation Factors for Substitute Rigid Phenolic Foam Blowing Agents	152
8-1	1985 Market Distribution for Polyurethane and Polyisocyanurate Insulation Foams	155
8-2	Potential Substitutes for Rigid PU Foam Products	156
8-3	Non-Residential Roofing Insulation Market	158
8-4	Estimated Energy Losses From Using Alternative Insulation in Industrial and Commercial Roofing	161
8-5	Estimated Relative Material and Energy Costs for Substitute Sheathings	166
8-6	Contribution to Total Insulation System Made by PU Foams in Various Applications	169
8-7	Relative Costs of Alternative Refrigerator Insulations	170
8-8	Potential Substitutes for PS-Foam Products	174
8-9	Retail Costs for a Variety of Single Service Plates	177
8-10	1985 Market Distribution for Extruded Polystyrene Insulation Foams	179

SECTION 1
PROJECT DESCRIPTION

BACKGROUND

Over the past decade, depletion of stratospheric ozone through the action of fully-halogenated hydrocarbons (halocarbons) has been the subject of extensive study and wide debate. This phenomenon involves a complicated set of interactions that are driven by ultraviolet radiation and occur within the upper atmosphere. Not only are the interactions extremely complex, but direct observations of them are difficult. Current evidence suggests that man-made halocarbons could contribute to depletion of the stratospheric ozone layer, although many scientific uncertainties remain.

A family of halocarbons known as chlorofluorocarbons (CFCs) are the primary suspects in the ozone depletion theory. Since they are stable, CFCs have a long life in the atmosphere and are not readily decomposed by the levels of ultraviolet radiation present in the lower atmosphere. Once a CFC molecule has been transported into the stratosphere, it can be acted upon by the higher intensity ultraviolet radiation releasing halogen atoms which catalyze the breakdown of ozone to diatomic oxygen. Such depletion of the protective layer of stratospheric ozone would result in increased ultraviolet radiation to earth which may cause adverse effects including increases in melanoma cancer, reduce crop yields, photochemical degradation of plastics, and changes in the global climate.

An important aspect of the ozone depletion problem is the lag time between the manufacture of CFCs and their ultimate arrival in the upper atmosphere. During this lag time which lasts from several to hundreds of years, the CFCs move through a series of reservoirs. The first major

reservoir consists of newly manufactured CFCs being held in storage. Here, they are retained for a period which is on the order of months. Next may be a reservoir of CFCs which are "banked" in the end-use product. The retention time here can be brief, or in products such as rigid polyurethane foams, the holdup time can last for hundreds of years. Finally, cumulative emissions of CFCs from all sources have created a lower atmospheric reservoir from which CFCs continuously diffuse into the upper atmosphere. The significance of this lag time is that there can be a considerable delay between the release of CFCs and the occurrence of ozone depletion which they might cause. Therefore, even if all controllable emissions are reduced promptly, the emissions from uncontrollable sources will continue for some time into the future.

CFCs are widely used in several industries including rigid foam manufacturing. In that industry, CFC-11 (fluorotrichloromethane) and CFC-12 (dichlorodifluoromethane), CFC-113 (trichlorotrifluoroethane), and CFC-114 (dichlorotetrafluoroethane) are used as physical blowing agents to reduce foam density and impart thermal insulating properties. CFC-11 is the primary blowing agent for rigid polyurethane and polyisocyanurate foams. The exotherm from the polymerization reaction causes volatilization of the CFC, and the vapor is trapped within the cellular matrix of the polymer foam. The cellular structure provides the foam with its rigidity, and the CFC-11 vapor trapped within the cells gives these foams their exceptional thermal insulating properties. For nonpolyurethane foams such as extruded polystyrene (PS) foam, CFCs are also used as a primary blowing agent. CFC-12 is the predominant blowing agent used in extruded CFC-blown PS foams. The main function of these CFCs is to produce numerous small closed cells which reduce the foam's density while providing good structural strength. The amount of blowing agent in a given formulation depends on the property specifications of the product.

The CFC-11 in rigid polyurethane and polyisocyanurate foams is characterized as being banked, i.e., the CFC gas is sealed in the foam's closed cells with a half life of approximately 100 years. From these cells, the blowing agent slowly diffuses over a period of centuries. Therefore, the quantity of

banked CFC-11 grows rapidly with each year's foam production, and essentially serves as an uncontrollable source of emissions. Historically, some polyurethane foams have been blown with CFC-12 as an auxiliary to CFC-11. However, the use of CFC-12 has experienced a substantial decline and current use is limited primarily to poured polyurethane foams. For the purposes of this report, it is assumed that CFC-12 also has a half-life in these foams of about 100 years (47). Similarly, the CFC-12 used to blow polystyrene boardstock is banked. This blowing agent's estimated half-life in this product is 40 years, so there is also a steady increase in size of this CFC-12 bank as long as the use of PS boardstock increases. Worldwide data compiled by the Chemical Manufacturers Association shows that of the nearly 1.2 million metric tons of CFC-11 used in rigid closed cell foams since the mid-1950s, about 53 percent is currently banked in the foam. Of the 244 thousand metric tons of CFC-12 used in closed cell foams, about six percent is currently banked (1).

Additionally, the CFC-11 and CFC-113 used to blow phenolic foam is also characterized as being banked. However, since CFCs are essentially insoluble in phenolic foam, the CFC gas is sealed in the foam's closed cells for the life of the foam.

Emissions of CFC-12 blowing agent from the extruded polystyrene foam sheet (as compared to PS foam board) manufacturing process are characterized as being prompt, i.e., the CFC gas is released during, or soon after, foam formation. Therefore, in this industry the quantity of CFC-12 emitted annually essentially equals the amount consumed annually. This contrasts with the CFC banking which occurs with rigid polyurethane and polystyrene boardstock foams.

Emissions of CFC from polyolefin (i.e., polyethylene and polypropylene) and polyvinyl chloride foams are also characterized as being prompt. These emissions may consist of CFC-11, CFC-12, CFC-114, or a mixture depending on

the foam type and thickness. Thus, like PS foam sheet, the quantity of CFC emitted annually essentially equals the amount consumed annually.

Chlorofluorocarbon use in the rigid foam industry is increasing in the United States and worldwide. In 1985 in the US, approximately 43,000 metric tons of CFC-11 and 7,000 metric tons of CFC-12 were used to manufacture rigid polyurethane foams. For the same year, the consumption of CFC-12 in polystyrene foams was roughly 9,200 metric tons. Additionally in 1985, a total of approximately 5,000 metric tons of CFCs (comprised of CFC-11, CFC-12, and CFC-114) were used for polyolefin foams and an additional 1,400 metric tons of CFCs (comprised of CFC-11 and CFC-113) were used for phenolic foam. It is estimated that in 1985 the rigid foam industry accounted for 51 percent of total domestic consumption of CFC-11 and 11 percent of the total domestic CFC-12 consumption (2).

PROJECT OBJECTIVES

The primary objective of this study was to evaluate technical options to reduce emissions of CFCs associated with rigid polyurethane and polystyrene foam processes and products. In this study, the following emission controls were emphasized: hydrocarbon blowing agents for PS foams, recovery and recycle of CFC-12 in PS foam manufacturing, and alternatives to CFC blown rigid foam products. Technical options to reduce CFC emissions from polyolefin, PVC, and phenolic foam processes and products were also evaluated.

An in-depth evaluation of the factors involved in these CFC controls was performed. These factors include estimated emissions of CFCs from various foam production processes and end-uses, and the availability of controls for these sources. For all control technologies, engineering and economic aspects have been examined, as well as barriers to control implementation. The relative effectiveness of each control technique was examined. A profile of the rigid foam industry including number and location of active firms, process technology, and projected growth, has also been prepared.

Based on these evaluations, promising controls were identified for the various foam categories. For each of these, a more detailed evaluation was performed which addressed the key technical factors, safety, economics, current status, and control cost effectiveness. The effectiveness of control consists of both the degree to which emissions can be curtailed, or controlled CFC emission, and the costs per unit averted.

SECTION 2
SUMMARY OF RESULTS

In the production of rigid foams, CFCs are used as physical blowing agents. The action of these blowing agents generates numerous small closed cells in the foam thereby providing structural strength and low density. In insulating applications, the CFCs are also desirable due to their good thermal insulating properties. For rigid polyurethane foams, the most commonly used blowing agent is CFC-11. For CFC-blown polystyrene foams, the predominate blowing agent is CFC-12, while mixtures of CFC-11/12/114 are used for polyolefin foams and mixtures of CFC-11/113 are used for phenolic foam.

RIGID POLYURETHANE AND POLYISOCYANURATE FOAMS

Since their introduction in the early 1940s, rigid polyurethane foams have experienced tremendous growth in both production and applications. Fire retardant polyisocyanurate foams which are based on a chemistry similar to that of polyurethane foams, have played a major part in this growth. Because of the similarities in chemistry, processing, and product applications, this report will use the word polyurethane (PU) to refer to both polyurethane and polyisocyanurate. The superior insulating characteristics of PU foams have allowed them to be used in a variety of insulating applications ranging from household appliances to large commercial buildings. In 1985, rigid polyurethane foam production in the U.S. reached approximately 336,000 metric tons. Approximately 90 percent of this production is used as thermal insulation. The remainder is used in packaging, flotation devices, and a variety of other applications.

In general, rigid polyurethane foam production can be divided into four types of processes: laminated foam panels, poured/injected foams, sprayed foams, and bunstock. Further, the consumption of rigid polyurethane foams can

be broken down into seven application areas. These are: building insulation, refrigerated appliance insulation, industrial insulation, packaging, transportation insulation, and other miscellaneous applications.

CFC-11 is the primary blowing agent for rigid polyurethane foam manufacture. A smaller amount of CFC-12 is used particularly in pour-in-place applications. In 1985, the estimated total U.S. consumption of CFC-11 and CFC-12 for rigid PU foam manufacture was 43,000 and 7,000 metric tons, respectively.

Rigid polyurethane foams have a very low permeability; therefore, the CFCs used in their manufacture are trapped and held for a very long period of time. The half life of CFC-11 in rigid polyurethane foam is estimated to be in excess of 100 years. This means that with each year's production, a growing reservoir or bank of CFC-11 is being formed. This bank serves as a very large and virtually uncontrollable source of CFC emissions. It is estimated that currently, for U.S. production, nearly 461,000 metric tons of CFC-11 and 74,000 metric tons of CFC-12 are banked in rigid polyurethane foam. Further, if the use of these foams continues to grow as it has in the past, the quantity of banked CFCs will have tripled to 1.4 million metric tons of CFC-11 and 228,000 metric tons of CFC-12 by the year 2000.

Because the rigid polyurethane holds the CFCs tightly, the emissions of CFCs during foam production are low. For 1985, the estimated foam production emission rates for CFC-11 and CFC-12 for all PU foams were 3,900 and 2,300 metric tons, respectively. The remaining CFC emissions for 1985 come from in-use emissions from the product. For CFC-11 and CFC-12, these emissions come from a slowly emitting bank and result in 2,900 and 500 metric tons of emissions, respectively. Therefore, the 1985 total CFC-11 and CFC-12 emissions for rigid polyurethane foam are 6,800 and 2,800 metric tons, respectively.

Polyurethane Foam Product Substitutes

Because rigid PU manufacturing emissions are relatively small and in-use emissions occur slowly over an extremely long time period, it is difficult to effectively control these emissions. However, one option which can provide a reduction in future CFC emissions, is to switch to substitute products which contain either smaller quantities of CFCs or none at all. Table 2-1 summarizes the aspects of various substitutes. A majority of rigid polyurethane foam is used as insulation for commercial and residential buildings. In this application, PU foams are found in a wide variety of specific uses and installation configurations. Because of this, applicability and selection of a substitute will be dependant upon the particular insulation project. Among the various properties which are characteristic of rigid PU foams, perhaps the most important are unequaled insulation efficiency per unit thickness, fire retardancy, structural rigidity, and ease of installation.

In cases where substitute insulation materials of equivalent thickness are used for PU foam, the probable result will be higher energy costs. Use of thicker substitute insulation or alternative construction methods can prevent increased energy costs, but often only under penalty of higher installation and material costs. Many states have enacted building codes which specify minimum insulation efficiencies for the walls, ceilings, and other components of residential and commercial buildings. Because these standards have been set with CFC-blown insulation in mind, the specifications cannot always be met with alternative materials in conventional design and construction. Additional regulations or specifications concerning fire retardancy and mechanical strength can preclude the use of substitute materials without design modifications.

Industrial and commercial roofing comprises nearly 65 percent of the rigid polyurethane and polyisocyanurate insulation foam market. There are a number of non-CFC containing materials which are also used in this application area, but each has limitations with respect to its insulating properties, fire

TABLE 2-1. SUMMARY OF ALTERNATIVE PRODUCTS AS CFC EMISSION CONTROL OPTIONS IN RIGID POLYURETHANE FOAM MANUFACTURE

Applications	Alternatives	CFC % Emission Reduction Potential	Relative Control Costs[a]		Control Applicability	Availability	Barriers to Implementation
			Materials Savings	Energy Costs			
Industrial Roof/Ceiling:	Fiberglass	100	Low	Low	Dependent upon application	All alternatives currently available.	Higher energy costs or higher construction costs for building.
	Perlite	100		High			
	Expanded PS	100	High	Medium			
	Extruded PS	40	Low	Low			
	Fiberboard	100	Medium	High			
	Cellular Glass	100		High			
	Insulating Concrete	100		High			
Industrial Walls:	Fiberglass	100	Low	Low	Dependent upon application, but generally good.	All alternatives currently available.	Higher energy costs or higher construction costs for building.
	Rock Wool	100		Medium			
	Perlite	100		High			
	Vermiculite	100		High			
	Insulating Concrete	100		High			
Commercial Roof/Ceiling:	Fiberglass	100	Low	Low	Dependent upon application	All alternatives currently available.	Higher energy costs or higher construction costs for building.
	Perlite	100		High			
	Expanded PS	100	High	Medium			
	Extruded PS	40	Low	Low			
	Fiberboard	100	Medium	High			
	Cellular Glass	100		High			
	Insulating Concrete	100		High			
Commercial Walls:	Fiberglass	100	Low	Low	Dependent upon application, but generally good.	All alternatives currently available.	Higher energy costs or higher construction costs for building.
	Rock Wool	100		Medium			
	Perlite	100		High			
	Vermiculite	100		High			
	Expanded PS	100	High	Medium			
	Extruded PS	40	Low	Low			
	Fiberboard	100	Medium	High			
	Cellular Glass	100		High			
Commercial Floors:	Fiberglass	100	Low	Low	Dependent upon application.	All alternatives currently available.	Higher energy costs or higher construction costs for building.
	Rock Wool	100		Medium			
	Expanded PS	100	High	Medium			
	Extruded PS	40	Low	Low			

(Continued)

TABLE 2-1 (Continued)

Applications	Alternatives	CFC % Emission Reduction Potential	Relative Control Costs[a] Materials Savings	Relative Control Costs[a] Energy Costs	Control Applicability	Availability	Barriers to Implementation
Residential Roof/Ceiling:	Fiberglass	100	Low	Low	Dependent upon application.	All alternatives currently available.	Higher energy costs or higher construction costs for building.
	Rock Wool	100		Medium			
	Cellulose	100		Medium			
Residential Walls:	Fiberglass Board	100	Low	Low	Dependent upon application, but generally good.	All alternatives currently available.	Higher energy costs or higher construction costs for building.
	Expanded PS	100	High	Medium			
	Extruded PS	40	Low	Low			
	Fiberboard	100	Medium	High			
	Perlite Board	100	High	High			
	Cellular Glass	100		High			
	Gypsum	100	High	High			
	Plywood	100	Low	High			
	Foil Faced Laminated Board	100	Medium	High			
Alternative Insulating Technologies:	Insulating Brick	100	Low	Low	Dependent upon application, but generally good.	Insulation brick not currently available in U.S., fiberglass is available.	Possible higher construction costs.
	Thicker Walls/Fiberglass Batts	100	Low	Low			
Residential Floors:	Fiberglass	100	Low	Low	Dependent upon application.	All alternatives currently available.	Higher energy costs or higher construction costs for building.
	Rock Wool	100		Medium			
	Foil Faced Laminated Board	100	Medium	High			
Refrigeration Insulation:	EPS	100	Medium	Low	Can be generally interchanged	All materials currently available	Higher manufacturing costs
	Extruded PS	40	Medium	Low			
	Fiberglass	100	Low	Medium			
Packaging	EPS Foam Peanuts or Blocks	100	Low	NA	Can be generally interchanged	All materials currently available	No apparent barriers
	Plastic Film Bubble Wrap	100	Low	NA			
	Wood Shavings	100	Low	NA			

[a]Control costs are broken into two groups: (1) material savings--because all alternative products have a lower cost than PU products; (2) energy cost--because all alternative products have a lower insulating efficiency per unit thickness than PU products.

retardancy, mechanical strength or ease of installation which might restrict its utility as a substitute in a particular installation. Because of the complexity of the roofing market, choice of an alternative will require evaluation on a case by case basis. Also, since polyurethane and polyisocyanurate foams have the highest insulation value per unit thickness, use of an equal thickness of the alternative insulations discussed in this report will cause an approximately 30 to 60 percent increase in energy costs. If greater thicknesses of an alternative insulation material are used, the added energy costs can be eliminated; however this can substantially increase the capital and installation costs.

In residential wall sheathing applications which comprise about 20 percent of the PU insulation market, probably one of the best near term alternatives to rigid PU foam is expandable polystyrene bead board. This material is roughly 43 percent less expensive than polyurethane insulation board and for an equivalent thickness, has about half the insulative capacity. Using expandable PS bead board, the total wall insulation system would have about 15 percent higher energy losses. Other substitute materials include: extruded polystyrene board, fiberglass board, various fiber boards, plywood, gypsum, and laminated paper board. With the exception of the extruded polystyrene board, all of these alternatives offer 100 percent reduction in CFC-11 emissions. Because extruded polystyrene board does use some CFCs, it offers approximately a 40 percent CFC-11 emission reduction potential.

For insulation of refrigerated appliances and transport vehicles, the best alternatives are expandable bead polystyrene, extruded polystyrene, and fiberglass. Again, these alternatives will require thicker walls, or there will be higher energy losses. An added drawback to these alternatives is higher manufacturing costs. Polyurethane foams may simply be injected as liquids into the cavity of a refrigerated appliance, yet the alternatives must be manually cut and placed into the cabinets.

A novel approach to increased energy efficiency and reduce CFC consumption in a home appliance is the use of a vacuum board. The vacuum board is a relatively thin product which has a high R-value per inch (30 to 35) created by a vacuum contained in the board. Three different models of vacuum board have been tested by the U.S. DOE. Of these products, the Japanese board appears to be the most advanced and has been used commercially. However, the use of vacuum boards in Japan is decreasing because of problems with leakage. The vacuum board is composed of fine silica powder (100u) sealed in an evacuated impermeable bag. The bag is adhered to one side of the wall cavity, and then polyurethane foam is poured around it. One problem with this technique has been that the CFCs in the foam have bled into the "impermeable" bags. The result is a substantial loss in the insulating quality of the board. In the U.S., General Electric is currently doing research, development, and testing on their own patented vacuum board technology.

In packaging applications, the thermal insulating characteristics of polyurethane foams are usually not important and a variety of alternatives exist. Included in these are non CFC blown loose-fill expanded polystyrene, expandable bead polystyrene foam blocks, shredded and wadded paper, cellulose wadding, die-cut cardboard, and wood shavings. All of these alternatives offer 100 percent reduction in CFC-11 emissions.

CFC Blowing Agent Substitutes

Use of low ozone depleting CFCs as blowing agents is another possibility for reducing CFC emissions from rigid polyurethane foams. For rigid polyurethane foam, the potential alternative CFCs include CFC-123 and CFC-141b. These were selected on the basis of having chemical and physical properties similar to those of CFC-11; however, each has potential drawbacks which are discussed in this report. Table 2-2 gives a summary of this option. Because these alternative CFCs are not commercially available, implementation of this control technology would be a longer term solution.

TABLE 2-2. SUMMARY OF LOW OZONE DEPLETING CFCS AS A CFC-11 EMISSIONS CONTROL OPTION IN RIGID POLYURETHANE FOAM MANUFACTURE

Factor	Lower Ozone Depleting CFC Compounds
Percent Emissions Reduction	Nearly 100 percent depending on substitute.
Control Cost ($/mt)	High or unknown, possibly increase blowing agent cost 5-10 times.
Control Applicability	Good, if substitute chemical is deemed to have acceptable properties.
Availability and Status	Poor, possible candidate CFCs are not commercially available.
Barriers to Implementation	High cost, or not available; some chemicals toxic or flammable; long development time.

An additional option exists for reducing CFC-11 use in pour-in-place appliance insulation foams. These foams which are used in appliances such as refrigerators, are commonly produced with a blowing agent composed of both CFC-11 and CO_2. The CO_2 is produced when water added to the formulation mixture reacts with the isocyanate. Many pour-in-place foam systems already have 10 to 15 percent of the CFC-11 replaced by water-generated CO_2. An additional 15 to 18 percent of the CFC-11 can be replaced using more water. The drawbacks and limitations of this option are discussed in this report.

NONPOLYURETHANE FOAMS

Nonpolyurethane foams include polystyrene, polyethylene, polypropylene, polyvinyl chloride and phenolic foams. This report focuses primarily on extruded polystyrene foams due to the market size and relative consumption and emissions of CFCs during the manufacture and use of these foams. Since their introduction, these foams have seen rapid growth as new applications were discovered, and there is yet a large potential for expansion into new areas. The other nonpolyurethane foams are not dealt with extensively in this report because limited information is available owing to limited size of some of the foam markets and the relative number of producers (i.e., much of the information is proprietary).

Rigid Polystyrene Foams

Polystyrene is extruded into both sheet and board profiles. Extruded PS sheet is a thermoformable material which is used to make a variety of single service and packaging items such as stock food and produce trays, egg cartons, hinged carry-out containers, plates, cups, and bowls. Over 80 percent of the total extruded PS foam made (blown with CFCs or hydrocarbons) is manufactured as sheets. Extruded PS board is used as an insulation material much in the same way as foamed polyurethane insulation.

In 1985, the total U.S. production of extruded polystyrene boardstock was nearly 49,000 metric tons. In the same year, the total U.S. production of CFC blown polystyrene extruded sheet was approximately 104,100 metric tons. The total U.S. consumption of CFC-12 to form the PS products was 9,200 metric tons. Because the blowing agent is able to permeate through the foam relatively quickly, the CFC-12 from sheet manufacture is emitted early in the product's shelf life. On the other hand, because polystyrene board is thick, the CFCs are retained for a longer period of time resulting in banking of the CFC-12. The estimated half-life for the CFCs in polystyrene board is 40 years (5).

Because the CFC half-life in polystyrene board is relatively long, the same concern with banked CFCs applies to this foam as does apply to rigid polyurethane foams. However, the amount of CFCs which are banked is much smaller. It is estimated that currently nearly 27,000 metric tons of CFC-12 are banked in polystyrene foam board. This bank is estimated to roughly triple to 90,000 metric tons by the year 2000. The emissions from the CFC-12 bank for PS foam will continue to grow as long as the use of PS boardstock grows.

For the U.S., the 1985 CFC-12 emissions for rigid polystyrene foams were estimated at 4,300 metric tons. Of this total, 3,700 metric tons were emitted from PS foam sheet manufacturing and thermoforming, and 600 metric tons were emitted from the PS extruded board manufacturing process and bank.

Blowing Agent Substitutes—

For polystyrene foam sheet, the use of low ozone depleting blowing agents can reduce the emission of ozone depleting CFC-12. The use of low ozone depleting blowing agents includes using non-fully halogenated CFCs, hydrocarbons, and inert gases. Table 2-3 summarizes the aspects of various alternative blowing agents.

POLYSTYRENE FOAM SHEET MANUFACTURE

Factor	Pentane Substitution	Pentane Substitution With Carbon Adsorption	Depleting CFC Compounds	CFC/HC and CFC/CO_2 Blends
Percent Emissions Reduction	100	100	92-100	15-30
Control Cost ($/mt)	$238/mt[a]	$305/mt[a]	High or unknown, possibly increase blowing agent cost 5-10 times	Low
Control Applicability	Good	Good	Good, if Substitute chemical has correct properties	Good
Availability and Status	Excellent, is currently widely used	Excellent, widely used	Poor, possible candidate CFCs are not commercially available	Good
Barriers to Implementation	Pentane emissions may require add-on controls for VOC emission control; reformulation and equipment conversion costs; increased fire hazards	High capital expense; ventilation modification needed; waste disposal	High cost, or not available; some chemicals toxic or flammable; long development time	Reformulation and conversion cost; more difficult process and quality control

[a]Specific control costs based on model plant calculations. Fire insurance costs not included.

One option that offers considerable promise in reducing CFC-12 emissions in the manufacture of polystyrene sheet is substitution of the CFCs with a hydrocarbon blowing agent. Currently, hydrocarbons such as n-pentane, iso-pentane or n-butane are viable candidates for replacing CFC-12 in polystyrene foam sheet production. These options can eliminate use of CFC-12 in this application, thereby providing 100 percent reduction in emissions of this ozone depleting compound. However, the resulting pentane emissions, if not controlled, may contribute to ground level atmospheric pollution.

When polystyrene foams were first introduced in the mid-1960s, they were blown almost exclusively with pentane. However, the fire hazards associated with pentane have caused a gradual conversion to CFC-12 as a blowing agent. In spite of the trend away from using hydrocarbons, it is possible to make virtually all thermoformable polystyrene foam sheet using a hydrocarbon such as pentane as a blowing agent.

Converting a plant so that it may use pentane rather than CFC-12 as a blowing agent would require modifications including new tanks, pumps and associated piping, explosion-proof electrical equipment, a modified ventilation system, and an improved fire protection system. The capital cost involved in these modifications could possibly be offset by the fact that pentane is 1/4 to 1/5 the cost of CFC-12 and 20 percent less pentane is required to blow the same quantity of foam.

With pentanes, there may be additional costs associated with add-on controls to reduce total VOC emissions. Pentane is regulated as a ground level ozone precursor, and therefore, will require some type of control in ozone nonattainment areas. Because of its reactivity, ground level ozone is considered to be a pollutant and will react long before it could travel to the upper atmosphere. Table 2-3 points out the costs and availability of pentane with an add-on VOC control device.

Use of alternate lower ozone depleting CFCs is also a potential method for reducing CFC-12 emissions from rigid polystyrene manufacturing. Candidate substitute CFCs include CFC-22, CFC-124, FC-134a, and CFC-142b. Both CFC-124 and FC-134a are promising as substitutes for CFC-12; however, they are not yet commercially available. CFC-22 and CFC-142b are available, but they have physical properties which might make them unsuitable for extruded polystyrene insulation board. However, they might prove satisfactory as polystyrene foam sheet blowing agents. Since much polystyrene foam sheet is used for packaging products which come into contact with food, thorough toxicity testing and FDA approval would be required for the new blowing agent. Implementation of this alternative is expected to be an option available in the longer term.

Finally, CO_2 is used to reduce but not eliminate the use of CFC-12 in PS foam manufacturing. This technology is currently available and can reduce emissions by 15 to 25 percent. In addition, blends of CFC and hydrocarbons can also be used to reduce CFC emissions.

Add-On Controls for CFC Reduction--

Add-on CFC control possibilities are recovery and recycle of CFC-12 through the use of a carbon adsorption system, or destruction of CFCs through incineration. A carbon adsorption and recovery system would require a substantial capital investment, but this cost could be partially offset if the recovered CFC-12 could be reused. An incineration system, on the other hand, would have generally high operating costs with no potential recovery credit. Table 2-4 summarizes the important factors concerning these two options.

Polystyrene Foam Product Substitutes--

The only other currently available CFC control technique for CFCs from polystyrene foam sheet is substitution with products which do not contain CFCs. Table 2-5 summarizes the aspects of substitution with various non-CFC containing products. Most polystyrene foam sheet products serve essentially the same purpose as the materials they have replaced. Indeed, in many applications, polystyrene foam and its competitors can be found in use

TABLE 2-4. SUMMARY OF ADD-ON CFC EMISSIONS CONTROL OPTIONS IN POLYSTYRENE FOAM SHEET MANUFACTURE

Factor	Carbon Adsorption With Recycle	Incineration, Thermal or Catalytic
Percent emission reduction	40	30-60
Control cost ($/mt)	$ 55/mt[a] and offers a potential recovery credit	Very high, no recovery credit
Control applicability	Good	Poor
Availability and status	Good, established technology.	Fair, established technology.
Barriers to implementation	High capital expense; ventilation modification needed; waste disposal.	Very high operating and capital cost.

[a]Specific control costs based on model plant calculations.

TABLE 2-5. SUMMARY OF ALTERNATIVE PRODUCTS AS CFC EMISSION CONTROL OPTIONS IN POLYSTYRENE FOAM MANUFACTURE

Application	Alternatives	Percent Emission Reduction	Control Cost	Control Applicability	Availability	Barriers to Implementation
Thermoformed Sheet						
Stock Food Trays:	Hydrocarbon Blown PS	100	Low	Excellent	Excellent	Cost, aesthetics
	Solid Plastic Trays	100	Medium	Excellent	Excellent	and preferences
	Plastic Film Wrap	100	Low	Excellent	Excellent	of consumer
	Plastic Bags	100	Low	Excellent	Excellent	
	Coated Paper Trays	100	Low	Excellent	Excellent	
	Butcher Paper	100	Low	Excellent	Excellent	
	Controlled Atmosphere Packaging	100	Medium	Good	Developmental	
Egg Cartons:	Hydrocarbon Blown PS	100	Low	Excellent	Excellent	None
	Paper	100	Low	Excellent	Excellent	None
Single Service Goods:						
Paper, Cups, and Bowls:	Hydrocarbon Blown PS	100	Low	Excellent	Excellent	
	EPS	100	Low	Excellent	Excellent	Consumer
	Paper	100	Low	Excellent	Excellent	Preference
	Solid Plastic	100	Low	Excellent	Excellent	
Hinged Containers:	Hydrocarbon Blown PS	100	Low	Excellent	Excellent	
	Paperboard Containers	100	Low	Excellent	Excellent	Aesthetics
	Solid Plastic Containers	100	Low	Excellent	Excellent	Consumer
	Paper Wraps	100	Low	Excellent	Excellent	Preference
	Foil Wraps	100	Low	Excellent	Excellent	
	Plastic Wraps	100	Low	Excellent	Excellent	
	Combination Laminated Wraps	100	Low	Excellent	Excellent	
Board Stock:						
Insulation Sheathing	-See Polyurethane Insulation Sheathing Alternatives in Table 2-1					

side-by-side. An example is PS and paper egg cartons which can both be found in many stores.

Other product substitutes include different types of materials. Perhaps the best product substitutes for CFC blown polystyrene foam products are hydrocarbon blown polystyrene foam products. Hydrocarbon blown foam is virtually identical to CFC blown foam; however, some end-users still request CFC-blown foam only. For stock food trays, some of the alternatives are solid plastic trays, plastic film wraps, plastic bags, coated paper trays and alternative technologies such as controlled atmosphere packaging. For egg cartons, the best substitute materials are hydrocarbon blown polystyrene foam and paper fiber. For single service goods, the alternatives include hydrocarbon blown polystyrene, expandable bead polystyrene, paper, solid plastic, paperboard, and various laminated foil and paper products. All of the substitutes for polystyrene foam sheet products provide a 100 percent reduction in CFC emissions.

Polystyrene Boardstock CFC Control Alternatives--

Since polystyrene board is used as an insulation material, the best approach to controlling the CFC emissions associated with this product is substitution with materials which do not contain CFCs. The discussion of insulation material replacements for polyurethane foams also applies here, and again, probably one of the best alternatives is expandable polystyrene bead board. The table (Table 2-1) of PU foam board substitutes can be reviewed for other alternatives.

Other Nonpolyurethane Foams

Other nonpolyurethane foams include polyolefin (i.e., polyethylene and polypropylene), polyvinyl chloride, and phenolic foams.

Polyolefin Foams—

Polyolefin foams are extruded into two types: plank and sheet. These foams are used primarily for cushion and protective packaging. In 1985, approximately 22,000 metric tons (48.5 million pounds) of polyolefin foam were produced (12). Of this, polyethylene plank accounts for approximately 40 percent (49). In the same year, a total of approximately 5,000 MT (11 million pounds) of CFCs (a mixture of CFC-11, CFC-12, and/or CFC-114) were used as blowing agent. Because the blowing agent is able to permeate through the foam relatively quickly, the CFCs are emitted during manufacture or within a year thereafter. As such, annual CFC emissions are assumed to equal annual CFC consumption.

For polyolefin foam, the use of low ozone depleting blowing agents can reduce the emission of ozone depleting CFCs. However, because of the required cushioning properties of these foams, the gas pressure within the cells must remain constant to provide dimensional stability. As such, alternative blowing agents must escape the product at essentially the same rate as that of established blowing agents. Potential substitutes include CFC-142b and CFC-124. However, they have not been tested and are expected to be long term options at best.

Finally, a wide variety of packaging alternatives such as non-CFC blown expanded polystyrene, shredded and wadded paper, cellulose wadding, die-cut cardboard, wood shavings, pre-foamed expanded polystyrene packing blocks and plastic film bubble wrap can be used as alternatives to polyolefin foams in some instances. However, protective packaging is a complex and diverse market. For one time, special packaging or for a delicate packaging requirement, alternative materials may not be able to provide adequate protection. This is especially true in applications where polyethylene plank is used since it represents one of the most cost effective, highest performance materials used in cushion packaging.

Phenolic Foam--

In the past, phenolic foam was used in the United States primarily as a base material for floral arrangements. However, the introduction of phenolic foam in thermal insulation applications in 1981 has resulted in an increase in the production of phenolic foam in recent years. In 1985, approximately 10,000 MT (22 million pounds) of phenolic foam were produced (12). In that same year, a total of approximately 1,400 MT (3 million pounds) of CFCs (comprised of CFC-11 and CFC-113) were used as blowing agents. Phenolic foam currently holds an 8 percent share of the total roofing and sheathing insulation market (50).

Like PU foam, phenolic foam retains most of the CFCs used as blowing agent and the emissions of CFCs during foam manufacture are low. In addition, the foam retains the CFCs for the duration of its useful life.

Since phenolic foam is used as an insulation material, the best approach to controlling the CFC emissions associated with this product is substitution with materials which do not contain CFCs. The discussion of insulation material replacements for polyurethane foams also applies here. Table 2-1 of PU foam board substitutes can be reviewed for other alternatives.

The use of low ozone depleting CFCs as blowing agents is another possibility for reducing CFC emission from phenolic foam. The potential alternatives include CFC-123 and CFC-141b. Because these alternative CFCs are not commercially available and thus have not been tested, implementation of this control would be a longer term solution.

CONTROLS LIKELY TO BE ADOPTED BY INDUSTRY

In meeting potential future CFC regulations, the various industry segments will use a combination of control options. This will depend on the overall emission reduction potential versus cost, the impact on the foam industry and end-use markets, and ease of implementation of the control options. Based on this analysis, the more favorable options have been

identified for each application of rigid polyurethane and polystyrene foams and are presented in Tables 2-6 through 2-9. In addition, Table 2-10 presents controls likely to be adopted for other nonpolyurethane foams including polyolefin, polyvinyl chloride, and phenolic foams.

Rigid Polyurethane Foam Bunstock and Laminated Board

Table 2-6 lists control options which industry might adopt in response to CFC regulations. However, the actual practice of choosing an insulation material is a complex issue involving a number of considerations such as the design of the structure to be insulated, requirements of the builder or customer, construction codes, regional climate, and material availability and cost.

Since rigid polyurethane insulating foams exist in a competitive building materials market, any short-term regulation would cause the other insulating materials to gain a larger share of the market. It is expected that use of thick fiberglass batts in building walls and some industrial tanks will replace some of the use of rigid PU foam insulation with little, if any affect on the R-value of the system. Other insulation materials will also be used in greater thicknesses (especially in roofing applications) as substitutes for rigid PU foam. The degree to which these product substitutes displace rigid PU foam insulation will depend heavily upon the stringency and timing of the regulation.

Other chemical substitutes will become available as mid- to long-term control options. It is likely that manufacturers of rigid PU bunstock and laminated board will prefer use of CFC-123 as a long-term alternative blowing agent. It is non-flammable, giving it an advantage over CFC-141b in building and industrial insulation applications even though CFC-141b may become available sooner. It is anticipated that foam manufacturers will be able to produce a foam with CFC-123, but it will be more expensive and have a slightly lower insulating ability per unit thickness. If rigid PU foam bunstock and laminated boardstock are manufactured with this chemical substitute, they will be less cost competitive with other building materials. Some displacement by alternative insulation materials would naturally occur.

TABLE 2-6. CONTROLS LIKELY TO BE ADOPTED FOR RIGID POLYURETHANE FOAM BUNSTOCK AND LAMINATED BOARD

Control	Availability
Thick Fiberglass Batts/Thick Walls Conventional Stud Spacing	ST
Thick Fiberglass Batts/Thick Walls Wide Stud Spacing	ST
Thick Fiberglass Batts - Industrial Insulation Systems	ST
Other Insulation Materials/ Conventional Thickness	ST
Other Insulation Materials/ Equivalent Insulating Capacity	ST
CFC-123	LT

*ST = Short Term, LT = Long Term

Add-on engineering controls are not considered as options likely to be adopted because of their high cost, low emission reduction potential and because they may not be useful in a scenario which involves large-scale replacement by product and chemical substitutes.

Rigid Polyurethane Poured and Sprayed Foams

Table 2-7 lists control options which industry might respond to future CFC regulation.

Building and Industrial Insulation--

Since rigid polyurethane insulating foams exist in a competitive building materials market, any short-term regulation would cause the other insulating materials to gain a larger share of the market. It is expected that use of thick fiberglass batts on building walls and some industrial tanks will replace some of the use of rigid PU foam insulation with little, if any, affect on the R-value of the system. Other insulation materials will also be used in greater thicknesses especially in roofing applications as substitutes for rigid PU foam. Rigid PU poured and sprayed foams will probably continue to be used for special cavity fill or coverage of complex surfaces due to the lack of available alternatives for these uses.

A short-term control option which may have some limited effectiveness is using CFC-22 instead of CFC-12 as a frothing agent. Although the use of CFC-12 as a frothing agent has been declining in recent years special applications still requiring a frothing agent can reduce use of CFC-12 by replacement with CFC-22 which has a lower ozone depletion potential. In the long term, however, FC-134a has been proposed as a better frothing agent substitute for CFC-12.

Other chemical substitutes will become available as mid- to long-term control options. It is likely that manufacturers of rigid PU poured and sprayed foams for building and industrial insulation will prefer use of

TABLE 2-7. CONTROLS LIKELY TO BE ADOPTED FOR RIGID POLYURETHANE POURED AND SPRAYED FOAMS

Control	Availability*
Building and Industrial Insulation	
Thick Fiberglass Batts/ Thick Walls	ST
Thick Fiberglass Batts/ Industrial Insulating Systems	ST
Alternative Insulating Materials/ Conventional Thickness	ST
Alternative Insulating Materials/ Equivalent Insulating Capacity	ST
CFC-11/CFC-22	ST
CFC-11/FC-134a	LT
CFC-123	LT
Packaging	
Expanded Polystyrene (EPS) Bead	ST
Other Packaging Materials	ST
H_2O Only	ST
CFC-123	LT
Refrigerated Appliance Insulation	
CFC-11/H_2O	ST
CFC-11/CFC-22	ST
CFC-11/FC-134a	LT
CFC-141b	LT
CFC-123	LT
Refrigerated Transport	
CFC-11/CFC-22	ST
CFC-11/FC-134a	
CFC-141b	LT
CFC-123	LT

*ST = Short Term, MT = Mid Term, LT = Long Term

CFC-123 as a long-term alternative blowing agent. It is non-flammable, which gives it an advantage over CFC-141b in building and industrial insulation applications, even though CFC-141b might become available sooner. It is anticipated that foam manufacturers will be able to produce a foam with CFC-123 but it will be more expensive and have a slightly lower insulating ability per unit thickness. If rigid PU poured and sprayed foams are manufactured with this chemical substitute, they will be less cost competitive with other building materials. Some displacement by alternative insulation materials would naturally occur.

Packaging--

The packaging market is also a very cost competitive market, hence any short-term regulation would cause other packaging materials to gain a larger share of the market. EPS bead can be molded into shapes similar to rigid PU poured packaging. Other packaging materials such as plastic film bubble wrap can be used to provide other desirable properties.

Still, rigid PU foam packaging will be desirable for special packaging uses. Manufacturers will have the option of using less CFC-11 and using more water in the foam formulation. This causes production of additional CO_2 which acts as the substitute blowing agent. In fact, it may be possible to replace 100 percent of the CFC by using enough water (49).

Other chemical substitutes will become available as mid- to long-term control options. It is possible that manufacturers of rigid PU foam packaging will use CFC-141b as a blowing agent, since it has potential to become available earlier than CFC-123. This presupposes, however, that toxicity testing results show no harmful effects or that they are not a concern to the application. The fact that the chemical is slightly flammable should not restrict its use as a packaging material. CFC-141b and CFC-123 are expected to be more expensive than CFC-11, hence, packaging blown with CFC-141b or CFC-123 will be less cost competitive with other packaging materials. Some displacement by alternative packaging materials would naturally occur.

Refrigerated Appliance Insulation--

Alternative insulation materials were not considered as viable control options in this application since a major change to currently available materials which are less insulating per unit thickness (e.g., fiberglass batts) is contrary to the aims of current research. Refrigeration unit manufacturers would revert to this control approach only if the more technically favorable alternatives were unavailable.

In the short term, one control option is to use more water in the foam formulation thereby increasing the production of CO_2, to reduce the use of CFC-11 as a blowing agent for rigid PU poured foam. Since CO_2 has a higher thermal conductivity than CFC-11, an increase in foam density is required to regain some of the insulating efficiency lost.

However, emphasis on new materials and designs for refrigeration systems including higher grade insulation has resulted from more stringent appliance energy standards set by the federal government. Researchers are already devising ways to increase the efficiency of refrigeration units in order to conserve energy. New materials such as vacuum board panels are being considered, as well as new cabinet designs. It is likely that new materials or system designs will play an important role in the refrigeration insulation options of the future, even in the absence of CFC regulation.

Another short-term control option which may have some limited effectiveness is using CFC-22 instead of CFC-12 as a frothing agent. Apparently use of CFC=12 as a frothing agent has been declining in recent years due to formulation development (49). Special applications still requiring a frothing agent, however, can reduce use of CFC-12 by replacement with CFC-22 which has an ozone depletion potential that is lower than that of CFC-12. In the long term, however, FC-134a has been proposed as a better frothing agent substitute for CFC-12.

Other chemical substitutes will become available as mid- to long-term control options. These include CFC-123 and CFC-141b. The fact that CFC-141b is slightly flammable and potentially toxic may restrict it use in this application. These CFCs are expected to be more expensive than CFC-11; however, the total cost of the insulation is only a small fraction of the cost of the refrigeration unit.

Refrigerated Transport—

Alternative insulation materials were not considered as control options due to loss in volume and weight carrying capacities that transporters would endure, and because installation techniques of alternative materials will be laborious and costly. The transportation industry would begin to use fiberglass batts or other materials instead of rigid PU foam only if very stringent regulation is imposed immediately.

A short-term control option which may have some limited effectiveness is the use of CFC-22 instead of CFC-12 as a frothing agent. Although the use of CFC-12 as a frothing agent has been declining in recent years, special applications still requiring a frothing agent can reduce the use of CFC-12 by replacement with CFC-22. In the long term, however, FC-134a has been proposed as a better frothing agent substitute for CFC-12.

Chemical substitutes which will become available mid- to long-term are CFC-123 and CFC-141b and may be the best option for this application. It is expected to be less expensive and should be available sooner than the nonflammable CFC-123. The flammability of CFC-141b should not be a major concern in refrigerated transport insulation applications. It is anticipated that manufacturers would be able to produce a foam with CFC-141b or CFC-123 that has a slightly lower insulating ability and would be about twice the cost

of foam blown with CFC-11. Only a slight increase in thickness would be needed to produce a foam with equivalent insulating capacity, resulting in very little interior volume loss and increased weight. Again, the increased cost will be minor compared to the cost of the entire refrigerated transport unit.

Rigid Polystyrene Foam Boardstock

Table 2-8 lists control options which industry might adopt in response to future CFC regulation.

Likely short-term control options are product substitutes and alternative wall/roof construction. Use of other insulation products which do not contain CFCs is possible because a wide variety of substitutes is currently available at competitive prices in the market place. However, if such conversions occur, higher costs may be encountered due to either energy losses or increased construction costs to prevent additional energy losses.

In the long-term a likely control option is a chemical substitute such as FC-134a or CFC-141b. These two chemical substitutes were identified as possible candidates, but current information indicates that there has been only a limited amount of application testing of the alternatives. Therefore, it is expected that additional development and testing of the potential chemical substitute is needed. At present, FC-134a may be the preferred long-term option (49), since it has been reported that CFC-141b is slightly flammable.

Rigid Polystyrene Foam Sheet

Table 2-9 lists control options which industry might adopt in response to future CFC regulation.

TABLE 2-8. CONTROLS LIKELY TO BE ADOPTED FOR RIGID EXTRUDED POLYSTYRENE FOAM BOARDSTOCK

Control	Availability*
Thick Fiberglass Batts/Thick Walls Conventional Stud Spacing	ST
Thick Fiberglass Batts/Thick Walls Wide Stud Spacing	ST
Other Insulation Materials with Equivalent Insulation Capacity	ST
Other Insulation Materials with Conventional Thickness	ST
FC-134a	LT

*ST = Short Term, LT = Long Term

TABLE 2-9. CONTROLS LIKELY TO BE ADOPTED FOR RIGID EXTRUDED POLYSTYRENE FOAM SHEET

Control	Availability*
Substitutes for Egg Cartons	ST
Substitutes for Single Service Plates, Cup, etc.	ST
Substitutes for Hinged Containers	ST
Substitutes for Stock Food Trays	ST
Hydrocarbons without Carbon Adsorption	ST
Pentane without Carbon Adsorption	ST
CFC-124	LT
FC-134a	LT
CFC-22	MT

*ST = Short Term, LT = Long Term

In the short term, the use of substitute products is the control option which would most likely occur. There are a large number of potential product substitutes for foamed polystyrene sheet food packaging such as: paper, cardboard, plastic film, paper-backed metal foils, and composite wrappings. All of these materials are currently used in most of the market segments that use foamed polystyrene sheet. Technical factors such as thermal insulating value and product protection deserve consideration, but usually the choice for a particular material depends on aesthetic preference.

For PS foam sheet manufacturers who currently use CFCs, an option which could be favorable is conversion to substitute blowing agents such as pentane and other hydrocarbons. It is possible that these chemical substitutes will be viewed unfavorably by some producers because of concerns about fire hazards, volatile organic emissions, and foam processability and quality.

In the long term, it is possible that alternate CFC blowing agents will gain a substantial market share. From a technical standpoint, this will occur if these CFC substitutes offer comparable ease of processing and foam quality. Economically, it is probable that these new CFCs will be more expensive than currently used blowing agents.

Other Nonpolyurethane Foams

Other nonpolyurethane foams include polyolefin (i.e., polyethylene and polypropylene), polyvinyl chloride, and phenolic foams. Table 2-10 presents likely control options the industry will adopt for the various foam categories to meet future CFC regulations.

TABLE 2-10. CONTROLS LIKELY TO BE ADOPTED FOR OTHER RIGID NONPOLYURETHANE FOAMS

Control	Availability*
Polyethylene Foam	
Alternate Packaging Materials	ST
Rubber or Plastic Gaskets	ST
Rubber or Plastic Flotation Devices	ST
CFC-124	LT
Polypropylene Foam	
Carbon Adsorption	ST
Alternate Packaging Materials	ST
CFC-124	LT
Polyvinyl Chloride Foam	
Rubber or Plastic Gaskets	ST
Rubber or Plastic Flotation Devices	ST
CFC-124	LT
Phenolic Foam	
Thick Fiberglass Batts/Thick Walls Conventional Stud Spacing	ST
Thick Fiberglass Batts/Thick Walls Wide Stud Spacing	ST
Other Insulation Materials-- Equivalent Insulation Capacity	ST
Other Insulation Materials-- Conventional Thickness	ST
CFC-123	LT

*ST = Short Term, LT = Long Term

Polyethylene Foam--

Likely short-term control options for polyethylene foam include product substitutes such as other low density flotation materials, or rubber gaskets. This is also true for packaging. Many product substitutes are currently available for packaging material including water-blown polyurethane foam, expanded polystyrene (EPS) beads, and paper-based cushioning.

In the long-term, likely control options are CFC type chemical substitutes. Several chemical substitutes were identified as possible candidates: CFC-124a, CFC-142b, or CFC-22/142b blends. However, there has been only a limited amount of performance testing. Therefore, it is expected that further testing of the chemical substitute is needed. Overall economics may determine if use of a more expensive blowing agent is practicable.

Polypropylene Foam--

Polypropylene foam is a unique CFC application in that a carbon adsorption system was designed into the first commercial-scale plant for economic reasons. This system is currently realizing an overall CFC recovery of greater than 80 percent as a result of the unique processing conditions (51). Further reduction of CFCs in the short term could be achieved through the use of product substitutes since several product substitutes are currently available for packaging material.

In the long-term, likely control options are CFC type chemical substitutes. Several chemical substitutes were identified as possible candidates: CFC-124a, CFC-142b, or CFC-22/142b blends. However, there has been only a limited amount of performance testing. Therefore, it is expected that further testing of the chemical substitute is needed. Overall economics may determine if use of a more expensive blowing agent is practicable.

Polyvinyl Chloride Foam--

A likely short-term control option for polyvinyl chloride foam is a product substitute made from rubber or plastics. For both gaskets and flotation devices PVC foam is a relatively new material that was not available a few years ago. Product substitutes are currently available for both applications. Since PVC foam serves a relatively limited, but specialized market, product substitutes could be readily adopted by consumers.

In the long-term, a likely control option is a CFC-type chemical substitute, such as CFC-124. Several chemical substitutes were identified as possible candidates and CFC-124 is felt to be a technically feasible substitute, based on its physical properties. However, current information indicates that there has been only a limited amount of application testing with the alternative CFCs although chemical blowing agents have been used previously. Since the quality of the foam product depends on the substitute as a blowing agent, it is expected that testing of a potential substitute is needed.

Phenolic Foam--

Likely short-term control options for this application are product substitutes and alternative wall/roof construction. Since phenolic foam insulation is relatively new and equivalent thermal insulation systems are available, a large change in the availability or cost of phenolic foam should not cause technical problems in the building trade.

At least two chemical substitutes, CFC-123 and CFC-141b were identified as possible long-term options, but current information indicates that there has been only a limited amount of application testing of the alternatives. From a technical standpoint, this application is concerned with effects on

insulating performance and safety of a potential substitute blowing agent. Therefore, it is expected that testing of chemical substitutes is needed. At present, CFC-123 may be the preferred long-term option since it has been reported that CFC-141b is slightly flammable.

SECTION 3
INDUSTRY AND EMISSION PROFILE

OVERVIEW OF RIGID FOAM MANUFACTURE

Rigid foams are used in numerous applications ranging from building insulation to egg cartons. The majority of rigid foams are polyurethane (PU) (including polyisocyanurate) and polystyrene (PS). Less prevalent are the phenolic, polyolefin, and other thermoplastic foams; these are not discussed in detail in this report. Common to all foams is a cellular structure which is created by the presence of an expanding gas in the polymerizing mixture or polymer melt. The expanding gas, or blowing agent, is either the product of a chemical reaction in the polymerizing mixture, or is an inert substance which is added to the reaction mixture. This substance can be a gas, or it can be a liquid which will vaporize to generate a gas. Frequently, in the manufacture of rigid foams, the blowing agents used are chlorofluorocarbons (CFCs).

Background on Polyurethane and Polyisocyanurate Foam Production

Polyurethane foams are addition polymers produced by the chemical reaction of an isocyanate and a polyol. Similarly, polyisocyanurate foams are produced from an isocyanurate and a polyol. Because of the similarities of polyisocyanurates and polyurethanes, the term rigid polyurethane (PU) foam will, for the purposes of this report, refer to both polyisocyanurate and polyurethane foam.

Ninety percent of rigid polyurethane foam is used as insulation materials, while the remainder is used as materials for packaging and flotation.

The production of rigid polyurethane foams usually involves one of four processing operations: laminated foam core panel manufacture, poured foam production, sprayed foam application, or bunstock production. Building insulation is by far the largest consumption category for these foams, accounting for 57 percent of the total rigid polyurethane production. By production method, 90 percent of the total polyurethane foams produced is divided almost evenly among laminated, poured, and sprayed foams. Bunstock accounts for the remaining ten percent. The CFC content for polyurethane foams varies with the production method, but generally falls in the five to twenty weight percent range. CFC-11 is the most commonly used blowing agent. However, CFC-12 is also used in addition to CFC-11 to a limited extent for poured foams. CFC-12 is used for low temperature spraying and for frothing in pour-in-place applications. The low boiling point of CFC-12 causes the reacting polymer mixture to expand to a consistency similar to that of shaving cream. This allows injection of the foam into panels and other closed containers with a minimum of pressure buildup. Laminated board production relies on the adhesive characteristics of polyurethane. Laminates are commonly produced with surface skins of metal, paperboard, fabric, or plastic film (6). Poured foam technology is used to produce foams inside of an enclosed area such as a refrigerator housing or a building wall space. Here, the foam components are mixed and poured as a liquid into a cavity where foaming subsequently takes place. Sprayed foam technology is similar to that of poured foam. Here, the liquid foam mixture is sprayed onto the surface to be insulated such as pipework or a storage tank. Bunstock operations produce a very large block of foam which may be cut and formed into desired products.

In the early 1940s, rigid polyurethane foams were produced on a small scale, but by the end of the 1940s, the primary chemicals used to produce polyurethanes--isocyanates and polyols--became available on an industrial scale. The discovery of the superior insulating characteristics of these foams allowed them to be used in a variety of insulation applications including the lining of refrigerators and freezers, industrial equipment (tanks and piping), and transportation equipment (tank trucks, railcars,

etc.). Since the early 1960s, rigid polyurethane foams have experienced continuous and rapid growth as a result of several breakthroughs. These include: 1) the introduction of blowing agents such as CFC-11 and CFC-12; 2) the development of polymeric methylene diphenyl diisocyanate (MDI) which improved the foam properties and simplified processing; and 3) the development of surfactants which helped to control cell size, configuration, and uniformity.

Increased pressure has been applied to the building materials industry to manufacture products with superior fire retardancy characteristics. This has led to the growth in consumption of polyisocyanurate foams. These foams are closely related to polyurethane foam, but they are more fire retardant. They are chemically stable up to 150°C (302°F). Isocyanurate rigid foams have processing limitations that compromise their use as spray and pour-in-place foams. However, their fast reactivity and high viscosity are ideal for continuous laminated panel and board production.

The physical structural properties of rigid polyurethane foams are a function of foam density. CFC blown rigid polyurethane insulation foams usually have densities ranging between 0.032 and 0.048 g/cc (2 to 3 lb/cu. ft.). Approximately 8 to 16 percent fluorocarbon blowing agent is required in the reactant formulation to produce rigid polyurethane foam in this density range. In insulation applications, the most important property for rigid polyurethane foams is the thermal conductivity (often expressed as the U factor or the K factor). The U (or K) factor is greatly influenced by the blowing agent, cell size, cell contents, and foam density (7). Thermal conductivity is expressed in units of W/m-K (Btu-in/hr-ft^2-°F). In the construction industry, insulation materials are frequently characterized by their R-value. The R-value expresses the thermal resistivity or insulating efficiency of a material. A large R-value indicates a good insulating ability, and polyurethane foams are among the best insulators with an R-value of 7.2/inch. This value is simply the inverse of the thermal conductivity

value (U-factor or K-factor); therefore, the units expressing the R-value are m-K/W (hr-ft^2°F/Btu-in).

Background on Nonpolyurethane Foam Production

There are several nonpolyurethane rigid foams which are blown with CFC blowing agents. The most important types from the standpoint of CFC emissions have been the polystyrene, polyolefin, phenolic and PVC foams. A common feature of all these foams is that new uses for them are continuously being discovered. There is yet a large potential for expansion of these nonpolyurethane foams into new product areas. Also, many of the product areas that have been recently developed have not fully penetrated the market. For these reasons, growth in the use of CFC-12 and the other fluorocarbon blowing agents is expected for manufacturing of nonpolyurethane foams.

The qualities which have made these foams superior to the products which they have replaced include:

- water-resistance,
- thermal insulation,
- low density,
- shock resistance,
- noise resistance,
- static electricity resistance, and
- competitive cost.

Non-polyurethane foams of primary interest in this report are polystyrene foams. These foams are produced by an extrusion process. In this process, polystyrene resin is melted in an extruder, and a CFC or hydrocarbon blowing agent is injected into this polymer melt. The blowing agent dissolves into the molten polymer, and when the melt leaves the extruder, the blowing agent flashes causing the plastic to foam. The extruder die configuration determines the shape of the foam. For foam sheet production, the die is annular, and the resulting tube of foam is slit to form two sheets. Polystyrene foam board, however, is simply extruded through a die with a straight slit. Typically polystyrene foams are produced with initial blowing agent contents ranging from five to twenty percent by weight. In PS foam sheet, the CFC content typically ranges between 5 and 10 weight percent. The most commonly used blowing agents are hydrocarbons and CFC-12. Polystyrene sheet, which is used to manufacture packaging items such as meat trays, carry-out food trays, and egg cartons, is generally blown to a density of 0.048 to 0.16 g/cc (3 to 10 lb/ft^3) (8).

Polyolefin and PVC foams are also produced by an extrusion process similar to that used for polystyrene foam. The most commonly used blowing agents are CFC-11, CFC-12, CFC-114, or a mixture. These foams are produced with initial blowing agent concentrations ranging from approximately 15 to 20 percent by weight for polyethylene and PVC foams to as much as 50 percent for polypropylene foams. Densities of about 0.016 to 0.14 g/cc (1 to 9 lb/ft^3) are typical of polyolefin foams which are used for cushioning and wrapping (9).

In addition, phenolic resin foams are produced by a process similar to that used in the production of laminated PU foam. The blowing agent consists of CFC-11, CFC-114, or a mixture. Initial blowing agent concentrations range from 10 to 15 percent by weight depending on the CFC used. Like polyurethane foams, phenolic foams are used in insulating applications since they have an R-value of 8.3 per inch.

Blowing Agents

The cellular structure of rigid plastic foams is produced by the action of a blowing agent. There are both chemical and physical blowing agents. Chemical blowing agents undergo a chemical reaction liberating a gas causing the polymer to foam. Physical blowing agents, which do not react chemically, include compressed gases and volatile liquids. Gaseous blowing agents, which are injected into the polymerizing mixture or the polymer melt, include nitrogen and carbon dioxide. Liquid blowing agents include CFCs, chlorinated hydrocarbons, and aliphatic hydrocarbons. These are also injected into the polymerizing mixture or the polymer melt. Liquid blowing agents used in the manufacture of rigid foams are available as polyol blends supplied by the chemical suppliers or are available as a commodity chemical for blending with the other chemicals at the point of manufacture of the foam.

Polyurethane and polyisocyanurate insulation foams are generated through the action of a physical blowing agent (CFC-11). Some processes also use CFC-12 as a supplementary blowing agent, but its use is declining. Foaming occurs when the heat of the polymerization reaction vaporizes the CFC-11. The use of a CFC blowing agent generates a cellular structure in the polymerizing liquid reactant mixture. In rigid PU foams, the extensive cross-linking between the polymer chains essentially freezes this cellular structure, trapping the blowing agent inside. The closed cells give the foam a rigid, yet light-weight structure, and the CFCs trapped in the numerous tiny closed cells provide superior insulating properties.

Historically, many of the extruded polystyrene foam products have been blown with hydrocarbons such as n-pentane and isopentane, and to a lesser extent, butane. A variety of CFCs have been used either alone as the primary blowing agent, or in a mixture with other CFCs or pentanes. Besides n-pentane and isopentane, CFC-12 is the most commonly used blowing agent for the nonpolyurethane foams. Additionally, gases such as carbon dioxide are often used in conjunction with hydrocarbons and CFCs. Smaller quantities of CFC-11,

CFC-114, CFC-113, and CFC-115 are also used (5). Table 3-1 lists the various foam products and the types of blowing agents which are used to manufacture them.

RIGID FOAM INDUSTRY PROFILE

Polyurethane Foams

In 1985, rigid polyurethane foam production in the U.S. reached approximately 336 thousand metric tons (741 million pounds) (3). That represents an average increase of 7.5 percent per year since 1975 when the estimated production was 154 to 174 thousand metric tons (340 to 383 million pounds) (10). Table 3-2 shows the historical and projected production for rigid polyurethane foam in the U.S. Approximately 90% of all rigid polyurethane foam is used as thermal insulation (11). The primary producers of rigid polyurethane foams include Celotex, Rmax Inc., Apache Building Products Co., Atlas Roofing, Manville Corporation and Thermal Systems Incorporated. There are at least 28 major suppliers of polyurethane spray/pour systems. The largest of these are Olin, Brin-Mont Chemicals, Inc., General Latex, Reichold, Isocyanate Products, Inc., and Stepan. Tables 3-3 and 3-4 list the major producers of polyurethane foam and liquid foam systems, respectively.

In general, rigid polyurethane foam production can be divided into four types of processes: laminated foam core panel, poured/injected foams, sprayed foams, and bunstock. The typical CFC-11 content in the chemical formulation for bunstock and laminated foam is 14 percent, but it is 12 percent for poured or sprayed systems. CFC-12 is used in conjunction with CFC-11 for poured and sprayed systems, and its typical formulation content is 5 percent and 1 percent, respectively.

The consumption of rigid polyurethane foam can be broken down into roughly seven applications areas. These include: building insulation, home

TABLE 3-1. NONPOLYURETHANE FOAMS AND CORRESPONDING CFC BLOWING AGENTS AND MIXTURES

Foam Type	Blowing Agent
Polystyrene	Pentane Butane CFC-11 CFC-12
Polyethylene	CFC-12 CFC-114 CFC-115
Polypropylene	CFC-11 CFC-114
Phenolics	CFC-11 CFC-113
Polyvinylchloride	CFC-11 CFC-12

Source: (5)

TABLE 3-2. HISTORICAL AND PROJECTED UNITED STATES RIGID POLYURETHANE FOAM PRODUCTION: 1955 - 2015

Year	Rigid PU Foam Production	
	(1000 metric ton/year)	(10^6 lbs/yr)
1955	0	0
1960	5	10
1965	41	90
1970	95	210
1975	154	340
1980	244	550
1985	336	741
1990*	476	1049
1995	596	1314
2000	748	1649
2005	879	1938
2010	1034	2280
2015	1216	2680

*Projected values obtained from summing the medium growth projected figures of each rigid urethane foam category.

Sources: (2,3)

TABLE 3-3. MAJOR PRODUCERS OF RIGID POLYURETHANE FOAM PRODUCTS

Company	Plant Location	Product
RIGID BUN, BOARD, AND LAMINATES		
American Western	Fontana, CA Mesa, AZ	Laminates
Atlas Roofing	Camp Hill, PA LaGrange, GA Moline, IL	Laminates
The Celotex Corporation Building Productions Div.	Belvedere, IL Linden, NJ Jackson, MS Conyers, GA Charleston, IL Elizabethtown, KY Pennsauken, NJ Texarkana, AR Trace, CA	Laminates
Carpenter Insulation	Elkhart, IN Temple, TX	Laminates Bunstock
Dyplast	Miami, FL Anderson, SC	Bunstock Laminate
Elliott Co. of Indianapolis, Inc. Elfoam Urethane Division	Indianapolis, IN	Bunstock
General Plastic	Tacoma, WA	Bunstock
Homasote Company	Trenton, NJ	Laminates
Manville Building Materials Corp.	Rockdale, IL Jamesburg, NJ	Laminates
NRG Barriers, Inc.	Sanford, ME Hazleton, PA	Laminates
Polymer Building Systems, Inc.	Riverside, CA	Laminates
Rmax, Inc.	Greenville, SC Reno, NV Richardson, TX	Laminates

(Continued)

TABLE 3-3 (Continued)

Company	Plant Location	Product
Resco (AM. West.)	Denver, CO Mesa, AZ	Laminates
Temple-Eastex, Inc.	Diboll, TX	Laminates
Thermal Systems	Salt Lake City, UT Denver, CO Covington, KY Dallas, TX Jacksonville, FL Springfield, MA	Laminates
The Dow Chemical Co.	Columbus, OH La Porte, TX	Bunstock
Wintec	Bremen, IN	Laminates
Admiral	Gallesburg, IL Williston, SC Chesapeake, VA	Refrig. Freezers Refrig.
Amana	Amana, IA	Refrig./ Freezers
General Electric	Decatur, AL Louisville, KY Bloomington, IN Cicero, IL	Refrig.
Sanyo	San Diego, CA	Refrig.
Whirlpool	Ft. Smith, AR Evansville, IL	Refrig./ Freezers
White Consolidated	St. Cloud, MN	Freezers

(Continued)

TABLE 3-3 (Continued)

Company	Plant Location	Product
SMALL INSULATED CHESTS, COOLERS, AND BOTTLES		
Aladdin Industries	Nashville, TN	
The Coleman Co., Inc.	Wichita, KS	
Gott Corporation	Winfield, KS	
Headway Chemical Co.	New York, NY	
King-Seeley Thermos Co.	Macomb, IL	
CHAIR SHELLS, FURNITURE, AND HIGH DENSITY RIGID PARTS		
Cal-Style Furniture Mfg. Co.	Compton, CA	
Cosco Home Products	Columbus, IN	
Craddock Finishing Corp.	Evansville, IN	
Decor Originals	Conover, NC	
Jasper Corporation	Jasper, IN	
Paeco Industries, Inc.	Toms River, NJ	
Prestige Furniture Co.	Newton, NC	
Thomasville Furniture Industries	Thomasville, NC	
FLOTATION		
Emerson & Cuming	Canton, MA	
Faron Molding Division	Brooklyn, NY	
OMC Stern Drive	Waukegan, IL	

(Continued)

TABLE 3-3 (Continued)

Company	Plant Location	Product
Peterson Brothers Boat Works	Shell Lake, WI	
Robinson Industries, Inc.	Coleman, MI	
Samson Ocean Systems, Inc.	Waltham, MA	
TRANSPORTATION		
ACF Industries, Inc.	Milton, PA	
F/G Products, Inc.	Rice Lake, WI	
Fruehauf Corporation	Detroit, MI	
Fruit Growers Express Co.	Alexandria, VA	
Kentucky Manufacturing	Louisville, KY	
Timpte, Inc.	Denver, CO	
PACKAGING		
Acer Industries, Inc.	Toroson, MD	
Airtex Industries, Inc.	Minneapolis, MN	
Leggett & Platt, Inc.	High Point, NC	
Sealed Air Corporation	Danbury, CT	
Perry Chemical & Mfg. Co.	Lafayette, IN	
Strux Corporation	Lindenhurst, NY	
Voplex Corporation	Rochester, NY	

Source: (12)

TABLE 3-4. MAJOR SUPPLIERS OF POLYURETHANE LIQUID FOAM SYSTEMS

Company	Plant Location
BASF Wyandotte Corporation	Troy, MI
Brin-Mont Chemicals, Inc.	Greensboro, NC Riverside, CA
Callery Chemical Co.	Callery, PA
Chemetics Systems, Inc.	Compton, CA
Cook Paint & Varnish Co.	Kansas City, MO
E. R. Carpenter Company, Inc.	Richmond, VA
Flexible Products Company	Marietta, GA
Foam Enterprises	Minneapolis, MN
Foamseal Inc.	Oxford, MI
Freeman Chemical Company	Port Washington, WI
Frostee Foam	Antioch, IL
General Latex and Chemical Corporation	Ashland, OH Billerica, MA Cucamonga, CA Charlotte, NC Dalton, GA
Insta-Foam Products, Inc.	Joliet, IL
Isocyanate Products, Inc.	New Castle, DE
Marchem Corporation	Maryland Heights, MO
Mobay Chemical Corporation	New Martinsville, WV
North Carolina Foam Industries, Inc.	Mt. Airy, NC
Olin Corporation	Benicia, CA Brook Park, OH

(Continued)

TABLE 3-4 (Continued)

Company	Plant Location
PPG Industries	Springdale, PA
Polyblends, Inc.	Livonia, MI
Polymer Chemical Corporation	Santa Fe Springs, CA
Polymer Development Laboratories, Inc.	Huntington Beach, CA Newburgh, NY
Polythane Systems, Inc.	Spring, TX
Reichhold Chemicals, Inc.	Azusa, CA Carteret, NJ Ferndale, MI Tacoma, WA
Renosol Corporation	Ann Arbor, MI
H.H. Robertson Co. Freeman Chemical Corporation, subsidiary	Burlington, IA Chatham, VA Saukville, WI
Stepan Chemical Company Industrial Chemical Division	Millsdale, IL
The Dow Chemical Company	Columbus, OH Houston, TX

Source: (12)

and commercial refrigeration insulation, industrial insulation, packaging, transportation insulation, and other applications. Table 3-5 shows the application areas and CFC consumption for 1985.

Building construction insulation is the largest market for rigid polyurethane foams. This insulation is primarily board and laminated board products for insulating roofs, walls, and doors in residential, commercial, and industrial buildings. But as flame retardant properties have improved, construction applications for rigid foam have broadened. Rigid polyurethane foam also finds wide use in commercial and household refrigeration applications. This market uses mostly liquid foam systems for pour-in-place applications. Consumption of rigid foam in the transportation area is mainly for insulation of trucks and railroad tank and freight cars. A smaller amount is used for sprayed insulation of industrial storage tanks, pipes and ducts. Additional uses include insulation for travel trailers and motor homes. Packaging applications of rigid foam include foamed-in-place packaging for industrial equipment or scientific instruments. Rigid foams are also used as marine flotation devices and consumer items such as portable coolers (6).

The consumption of rigid polyurethane foams in each of these areas is given as follows. In 1985, the production of insulation for buildings (191 thousand metric tons) accounted for nearly 57 percent of the total rigid polyurethane foam produced. Refrigeration insulation, the second largest user of rigid polyurethane foams, accounted for only 16 percent of total production. The remaining insulation categories, industrial and transportation, each consumed roughly nine percent of total production. The remaining rigid polyurethane foam consumption areas are packaging, and others such as marine flotation. Packaging used about six percent of the total production. The remaining one percent of rigid polyurethane foam production went into various applications such as flotation.

TABLE 3-5. 1985 RIGID PU FOAM PRODUCTION AND CFC CONSUMPTION IN THE U.S.
(1000 mt)

	1985 Rigid PU Production	Estimated Production by Each Method				Total CFC Consumption	
		Bunstock	Laminated	Poured	Sprayed	CFC-11	CFC-12
Building Insulation	191	19.1	91.4	19.1	61.0	25.1	1.6
Refrigeration Insulation	54	0.0	0.0	54.4	0.0	6.5	2.7
Transportation Insulation	29	0.0	0.0	19.8	9.7	3.5	1.1
Industrial Insulation	27	1.4	0.0	3.0	22.9	3.3	0.4
Packaging	20	0.0	0.0	20.0	0.0	2.4	1.0
Other	15	3.6	3.6	3.6	3.6	1.9	0.2
Total	336	24.0	95.1	119.8	97.2	42.7	7.0

Sources: (3,10,13).

TABLE 3-6. POLYSTYRENE FOAM SHEET, FILM, BOARD AND BLOCK PRODUCERS INCLUDING EXTRUDERS

Company	Plant Location
Airlite Plastics Co.	Omaha, NB
Albany International	Agawam, MA
Alcoa Building Products, Inc.	Pittsburgh, PA
Alsco Arco Building Products	Akron, OH
American Excelsior Company	Arlington, TX
Amoco	Chippawa, Falls, WI Beech Island, SC Lamirada, CA Winchester, VA
Amotex Plastics	Nashville, TN
Amxco, Inc.	Arlington, TX
Atlas Industries	Ayer, MA
Bird, Inc., Vinyl Products Group	Bardstown, KY
Burton Packaging Co., Inc.	Maspeth, NY
Cellox Corporation	Reedsburg, WI
Commodore Plastics	Holcomb, NY
Creative Industries	Chicago, IL
Crystal X Corporation	Darby, PA
Dart Container Corporation	Mason, MI Leola, PA Horse Cave, KY Lavonia, GA Plant City, FL Waxahachie, TX Corona, CA Tumwater, WA Aurora, IL Lodi, CA
Denver Plastics, Inc.	Hudson, CO
Dipak Mfg. Co., Inc.	Westport, NY
Dixie/Marathon	Baltimore, MD St. Louis, MO

(Continued)

TABLE 3-6 (Continued)

Company	Plant Location
The Dow Chemical Co., U.S.A.	Midland, MI Allyn's Poinyt, CT Magnolia, AR Torrance, CA Hanging Rock, OH Joilet, IL Seattle, WA Pevely, MO Carteret, NJ
Drew Foam Companies, Inc.	Monticello, AR
Dyrelite Corporation	New Bedford, MA
EFP Corporation	Elkhart, IN
Erie Foam Products, Inc.	Erie, PA
FPI	Vicksburg, MS
Falcon Mfg, Inc.	Byron Center, MI
Foamade Industries	Auburn Hills, MI
Foam Fabricators, Inc.	St. Louis, MO Melrose Park, IL New Albany, IN Compton, CA El Dorado Springs, MO Erie, PA Bloomsburg, PA
Foam Molders and Specialties	Cerritos, CA
Free-Flow Packaging Corp.	Redwood City, CA
Frostee Foam, Inc.	Antioch, IL
Genpak	Montgomery, AL Longview, TX Los Angeles, CA Middletown, NY Manchaug, MA
The Gilman Brothers Co.	Gilman, CT
Glendale Plastics	Ludlow, MA
Gotham Chicago Corp.	Chicago, IL
W.R. Grace & Co.	Reading, PA Indianapolis, IN

(Continued)

TABLE 3-6 (Continued)

Company	Plant Location
Handi-Kup Co.	Corte Madera, CA
Holland Industries, Inc.	Gilman, IA
Huntsman Container	
Hydra-Matic Packing Co., Inc.	Bethayres, PA
Kalamazoo Plastics	Kalamazoo, MI
Keyes Fibre/Dolco	Decatur, IN Lawrenceville, GA Pico Rivera, CA Wenatchee, WA Dallas, TX
Lifoam	Baltimore, MD
The Lin Mfg. Co.	Clinton, OK
Linpac (Florida Container)	Seabring, FL Wilson, NC
MacDonald Plastics	New Baltimore, MI
Manchaug Corporation	Manchaug, MA
Mars Cup Company, Inc.	Huntington Station, NY
Master Containers, Inc.	Mulberry, FL
Mobil Chemical Co.	Canandaigua, NY Covington, GA Frankfurt, IL Temple, TX Bakersfield, CA
Monsanto Company	St. Louis, MO
Morval-Durofoam Limited	Kitchener, Ontario, Canada
Nyman	East Providence, RI
Olsonite Corporation	Detroit, MI
Owens-Illinois	Toledo, OH
Pac-Lite Products, Inc.	Marine City, MI
Pelafoam, Inc.	Richmond, CA
Pioneer Plastics	Bedford, IL
Plasteel Corp.	Inkster, MI
Plastica Company, Inc.	Hatfield, PA

(Continued)

TABLE 3-6 (Continued)

Company	Plant Location
The Plastifoam Corp.	Rockville, CT
Plasti-Kraft Corp.	Ozona, FL
Plastilite Corp.	Omaha, NB
Plastronic Packaging Corporation	Stevensville, MI Sparta, WI St. Charles, IL El Paso, TX Grand Prairie, TX Minneapolis, MN
Poly Foam, Inc.	Lester Prairie, MN
Polyfoam Packers, Corp.	Wheeling, IL
Poly Molding Corp.	Haskell, NJ
Preferred Plastics, Inc.	Putnam, CT
Radva Plastics Corporation	Norristown, PA
Rector Insulations	Mt. Vernon, NY
SF Products, Inc.	Memphis, TN North Kansas City, MO Jackson, MS
Shelmark Industries, Inc.	Columbus, OH
Solo Cup	
Snow Foam Products, Inc.	El Monte, CA
Sonoco Products Co.	Hartsville, SC
M.H. Stallman Co.	Providence, RI
Sweetheart Plastics, Inc.	Wilmington, MA Owings Mills, MD Chicago, IL Conyers, GA Dallas, TX Los Angeles, CA
Tekni-Plex	
Tempo Plastic Co., Inc.	Burbank, CA
Tex Styrene	New Brighton, MN
Thompson Industries	Phoeniz, AZ
Toyad Corporation	Latrobe, PA

(Continued)

TABLE 3-6 (Continued)

Company	Plant Location
Tuscarora Plastics, Inc.	New Brighton, PA
UC Industries, Inc.	Parsippany, NJ Tallmage, OH Rockford, IL
U.S. Mineral Products Co.	Stanhope, NJ
Western Foampak	Oelwein, IA Greensboro, NC Malverne, AR Fresno, CA Yakima, WA
Wilshire Foam Products, Inc.	Carson, CA

Source: (12)

Nonpolyurethane Foams

Nonpolyurethane extruded foam products include polystyrene sheet and film, polystyrene boardstock, polyethylene plank and sheet, polypropylene foam sheet, and PVC foam. Nonpolyurethane foams also include phenolic resin foams.

Polystyrene sheet is normally thermoformed into common food packaging items such as egg cartons, meat and produce trays, and fast-food containers. Polystyrene foam sheet with laminated faces has also been used as a corrugated cardboard substitute for poster boards used in the graphic arts industry. Polystyrene film has a non-slip surface which is useful for wrapping material and food tray lining. Polystyrene foam boardstock, especially when foamed with chlorofluorocarbon blowing agents, is used as a construction insulation material (14).

In their 1980 report, Rand cited a publication which listed 105 producers of polystyrene sheet, film and block (13). Three companies produce a majority of the polystyrene foam manufactured in the United States. These are Mobil Chemical Company, Amoco, and W.R. Grace Formpac Division. Table 3-6 lists the major polystyrene foam manufacturers. In the past year, the 13 largest PS-foam producing companies have installed as many as 75 new PS-foam lines to meet increasing demands. Sources have indicated that at least 70 to 75 percent of the PS foam produced is made using non-CFC blowing agents (18,23). The top three producers (Mobil, Grace, and Amoco) generate an estimated 70 to 90 percent of all PS foams—using primarily hydrocarbon blowing agents (23). However, data from Rand indicates that the fraction of PS foam sheet blown with pentane decreased rapidly in the 1970s from 45 to 50 percent in 1973 to about 35 percent in 1977 (13). For purposes of this report, Radian is using 70 percent as the current fraction of PS foam sheet produced with hydrocarbons. Among the list of major foam producers who use CFC blowing agents are Mobil Chemical Co., Huntsman Container Corporation, W.R. Grace Co., Dow Chemical U.S.A., and Owens-Illinois. Table 3-7 shows estimates of total CFC blowing agent consumption derived from sales data for polystyrene foams (3,9).

TABLE 3-7. 1985 ESTIMATED CONSUMPTION OF CFC BLOWING AGENTS FOR THE MANUFACTURE OF POLYSTYRENE FOAM (1,000 mt)

	Total Product	% of Product Blown With CFCs	Product Using CFCs	Foam Formulation % CFC Content	Estimated CFC-12 Consumed
Boardstock	49.1	100%	49.1	6%	2.95
Sheet					
Stock Food Trays	77.1	50%	38.6	6%	2.31
Egg Cartons	36.3	50%	18.2	6%	1.09
Single Service					
Plates, Cups, etc.	53.9	50%	27.0	6%	1.62
Hinged Containers	28.6	50%	14.3	6%	0.86
Other Foam Sheet	12.2	50%	6.1	6%	0.37
Total Sheet	208.2		104.1		6.25
Totals	257.3		153.2		9.20

Source: (3,23)

Of all the rigid nonpolyurethane foam products, polystyrene foam sheet products consume the largest quantity of CFC blowing agents. The manufacture of these products (i.e., the food trays, egg cartons and single service products) required approximately 3,800 metric tons (8.3 million pounds) of CFCs in 1985. Extruded polystyrene boardstock consumed roughly 3,000 metric tons of CFC blowing agents in 1985.

Polyolefin foams can be broken down into two types: plank and sheet. In 1985, approximately 22,000 metric tons (48.5 million pounds) of polyolefin foam were produced (12). Of this, polyethylene plank accounts for approximately 40 percent (49). Plank refers to foam 2.5 (1 inch) thick up to 10.1 cm (4 inches) thick. The end uses of plank consist of cushion packaging, 70 percent; construction, 6 percent; sports and leisure, 12 percent; and returnable dunnage, 12 percent (49). A significant end use of PE plank is the military, which accounts for approximately 30 percent of cushion packaging. This is due primarily to the multiple drop protection and high load bearing ability PE foam offers. The primary manufacturers are: The Dow Chemical Company, Sentinel Foam Products, and Valcour, Incorporated. These companies produce about 80 percent of PE plank.

Polyethylene and polypropylene foam sheet account for the remaining 60 percent of the polyolefin foam market (49). Foam sheet is normally 1.3 cm (1/2 inch) thick or less with most material being 0.3 cm (1/8 inch) or less. Approximately 99 percent of polyolefin foam sheet is used for surface production/packaging with the remaining 1 percent for sports and leisure applications (49). The primary manufacturers of PE sheet are: Sealed Air Corporation, Sentinel Foam Products, Richter Manufacturing Corporation, and Valcour, Incorporated. These companies produce about 80 percent of PE sheet. Ametek Incorporated is the sole producer of PP foam sheet.

In the past, phenolic foam was used in the United States primarily as a base material for floral arrangements. However, the introduction of phenolic foam in thermal insulation applications several years ago, especially

following the development of closed-cell phenolic foam in 1981 by Koppers Company has results in an increase in the production of phenolic foam in recent years. Koppers Company has a patented process for producing closed-cell phenolic foam insulation.

Building construction insulation accounts for the majority of the phenolic foam market. This arises since closed-cell phenolic foam provides better insulating value than many other materials with an R-value of 8.3 per inch (50). In addition, phenolic foam maintains its R-value over the entire life of the foam (50). Application of phenolic foam include frame wall sheathing and under-roof insulation. In 1985, approximately 10,000 metric tons (22 million pounds) of phenolic foam were produced (12). Of this, approximately 60 percent was used as roofing insulation and the remaining 40 percent as sheathing (12).

Finally, polyvinyl chloride foam is used in a variety of applications including: gasket and sealing materials, athletic padding, flotation devices, and pipe insulation. Greater durability, ease of use, and lower cost have resulted in the replacement of rubber with PVC foam in many sealant and gasket applications. Moisture resistance and low density also make PVC foam suitable for use in flotation applications such as life jackets and buoys.

CFC EMISSIONS CHARACTERISTICS

The CFC emissions characteristics of rigid foams can be conveniently divided into production, in-use, or disposal emissions.

Production Emissions

Polyurethane Foam—

The primary characteristic of rigid polyurethane foams is that the blowing agents are trapped in the finished foam's closed cells with only a

minor amount of the blowing agent escaping during production. There is varied information on how much CFC is lost during foam production. In general, only a small amount is lost during the polymerization phase. This amount depends upon the foam's stability during rise, the percentage and type of CFCs used, the maximum temperature within the foam, and the extent of mechanical rupture of foam cells after curing the foam. Table 3-8 shows the estimated CFC emissions associated with each of the production methods.

Nonpolyurethane Foams--

There are several sources of CFC emissions during nonpolyurethane foam manufacturing processes. A typical polystyrene sheet extrusion process will experience blowing agent losses of approximately 60 percent of the total consumed (5,16). These losses occur during extrusion, curing, thermoforming, and scrap reprocessing. Emissions from manufacture of polystyrene boardstock were assumed to be approximately 5 percent of the CFC consumed (13). However, based on current information, these emissions may be as high as 15 percent (49).

Emissions of CFCs from a typical plant which manufactures polyolefin or PVC foam originate from the extrusion process and from foam storage, while those from phenolic foam are similar to PU foam in that only a small amount of the blowing agent is lost during foam production. Variation in emissions can be caused by the degree to which the CFC is premixed in the extruder, the difference in temperature profile of the extruder, the die shape, the sheet thickness, and specific operating conditions.

In-Use Emissions

Polyurethane Foam--

Prior to the banning of aerosol propellant CFCs and the upsurge in production of rigid insulation foams, the predominant uses of CFC-11 led to immediate release of the chemical to the atmosphere. However, its use in closed cell foams is changing the emissions scenario to one in which there is an accumulation of the blowing agent and a steady very long term release. Informal estimates from DuPont suggest that the half lives of CFCs in

TABLE 3-8. ESTIMATED CFC NON-WEIGHTED CONSUMPTION & EMISSIONS FROM RIGID PU FOAM PRODUCTION IN THE U.S. (1000 mt)

	1985 Rigid PU Production	Estimated CFC-11 Consumed				Estimated CFC-12 Consumed		Estimated CFC-11 Emissions				Estimated CFC-12 Emissions	
		Bunstock	Laminated	Poured	Sprayed	Poured	Sprayed	Bunstock	Laminated	Poured	Sprayed	Poured	Sprayed
% CFC Content in the Formulation		14.0	14.0	12.0	12.0	5.0	1.0						
% of Total CFC Emitted During Production								19.0	2.5	11.2	10.0	36.2	20.0
Building Insulation	191	2.7	12.8	2.3	7.3	1.0	0.6	0.5	0.3	0.3	0.7	0.3	0.1
Refrigerated Insulation	54	0.0	0.0	6.5	0.0	2.7	0.0	0.0	0.0	0.7	0.0	1.0	0.0
Industrial Insulation	27	0.2	0.0	0.4	2.7	0.1	0.2	0.0	0.0	0.0	0.3	0.1	0.0
Packaging	20	0.0	0.0	2.4	0.0	1.0	0.0	0.0	0.0	0.3	0.0	0.4	0.0
Transportation	29	0.0	0.0	2.4	1.2	1.0	0.1	0.0	0.0	0.3	0.1	0.4	0.0
Other	4	0.5	0.5	0.4	0.4	0.2	0.0	0.1	0.0	0.0	0.0	0.1	0.0
Total	336	3.4	13.3	14.4	11.7	6.0	1.0	0.6	0.3	1.6	1.2	2.2	0.2

Source: (3,10,13).

one-inch-thick unclad rigid polyurethane foam range from 75 to 150 years (16,5). The future emissions of CFC-11 will therefore lag behind the cumulative production and sales. This creates a situation in which it is impossible to immediately control or reduce the emissions of CFC-11 to the atmosphere, should such an action be desired. Additionally, the uncertainties in estimating the annual release will be greatly increased.

One study examined the CFC-11 emissions characteristics of four different types of foam insulation (4). The four foams selected were representative of much of the closed cell polyurethane foams used for insulation. The manufacturers of the foam claimed that the fraction of CFC-11 in the foams was about 15 percent by weight. Measurements taken by the experimenters, however, indicated that the CFC-11 content was approximately 8 to 12 percent by weight. Each sample piece was cut to a one foot by one foot square and placed into a specially designed apparatus which would measure the concentration of CFC-11 in an air stream which was swept over the sample. The experimental results indicated that release of blowing agent from the foam samples is characterized by a pattern consisting of three phases. The first is quick release followed by a transition phase and finally a period of steady release. During the first phase which will last about two months, the release rate is relatively large but decreases rapidly; therefore, in the long run, this period does not account for much of the cumulative emissions of the blowing agent. Several months later following the transition period, the rate of release of CFC-11 becomes nearly constant and this last phase represents the long term behavior of the foam.

The main result of this study is that, in undisturbed and intact foams, the CFC-11 remains in the foam for a very long time with a half life of perhaps 100 or more years. One sample actually indicated a CFC half life of 320 years. Therefore, a small percentage of the total CFC-11 used in a given year for rigid polyurethane foam production will be released quickly into the atmosphere; the remaining CFC is held in a slow-leaking reservoir. The total

quantity of this "banked" CFC-11 increases each year, and may eventually become a large and almost uncontrollable source of CFC (4).

Table 3-9 shows, for the years between 1955 and 2015, estimated annual CFC emissions from rigid polyurethane foam assuming a CFC content of 13 percent CFC-11 and two percent CFC-12 with CFC half lives of 100 years for both CFC-11 and CFC-12. These results are rough estimates because of the uncertainties in the assumptions, but they do indicate the potential for tremendous growth of the banked CFCs. In 1985, approximately 461,000 metric tons of CFC-11 and 74,000 metric tons of CFC-12 were banked in PU foams. Assuming moderate growth rates in the various consumption areas, the bank should triple in size, by the year 2000, to over 1.4 million metric tons of CFC-11 and 228,000 metric tons of CFC-12.

Nonpolyurethane Foam--

Because CFC-12 and the other CFC blowing agents are able to permeate through the polystyrene, polyolefin, and PVC foams relatively quickly, the CFC which remains in the cells after manufacture (40 percent of the total consumed during PS foam sheet production) is emitted early in the product's shelf-life. DuPont has estimated half-lives of blowing agents in several of the nonpolyurethane foam products (5). These estimates are reproduced in Table 3-10. In each case, the half life of the CFC is sufficiently small that none remains upon disposal of a rigid nonpolyurethane product, except in the case of thick cross-section insulating board.

TABLE 3-10. ESTIMATED HALF-LIVES OF CFC IN RIGID NONPOLYURETHANE FOAM

Foam Type	Approximate Half-Life in Product[a]
Polystyrene Sheet	1.5 months
Polystyrene Board	40 years
Polyethylene (CFC-12)	1 week
Polyethylene (CFC-114)	4 weeks
Polyvinyl chloride	1 week

[a]Depends on dimension of product.
Source: (5, 43)

TABLE 3-9. ESTIMATED CFC-11 AND CFC-12 EMISSIONS[a] FROM MANUFACTURE AND USE OF RIGID POLYURETHANE FOAMS IN THE U.S. (1,000 mt/yr)

		CFC-11							CFC-12						
	Rigid	Annual	Cumulat.	Cumulat.	Cumulat.	Annual Emissions			Annual	Cumulat.	Cumulat.	Cumulat.	Annual Emissions		
Year	PU Prod.	Use	Use	Banked	Emitted	Bank	Mfg.	Total	Use	Use	Banked	Emitted	Bank	Mfg.	Total
1955	0	0	0	0	0	0.0	0	0	0	0	0	0	0.0	0	0
1960	5	1	1	1	0	0.0	0	0	0	0	0	0	0.0	0	0
1965	41	5	15	15	0	0.1	0	1	1	2	2	0	0.0	0	0
1970	95	12	64	62	1	0.3	1	1	2	10	10	0	0.1	1	1
1975	154	20	160	155	5	0.9	2	3	3	26	25	1	0.2	1	1
1980	244	31	303	291	12	1.8	3	5	5	49	47	2	0.3	2	2
1985	336	43	485	461	24	2.9	4	7	7	78	74	4	0.5	2	3
1990	476	61	749	706	43	4.5	5	10	10	120	113	7	0.7	3	4
1995	596	76	1097	1025	72	6.6	7	13	12	176	165	11	1.1	4	5
2000	748	95	1532	1420	112	9.2	9	18	15	246	228	18	1.5	5	7
2005	879	112	2057	1890	168	12.4	10	23	18	330	303	27	2.0	6	8
2010	1034	132	2674	2434	240	16.0	12	28	21	429	391	39	2.6	7	10
2015	1216	155	3400	3068	333	20.3	14	34	25	546	492	53	3.3	8	12

[a]Estimated emission values are non-weighted.

Source: (3,10,13)

Therefore, the only nonpolyurethane products which banks CFC emissions over a one year period are polystyrene boardstock and phenolic foam. The other nonpolyurethane foam products lose all of their CFCs within one year. In-use emissions from polystyrene boardstock in a given year are the sum of emissions from the newly made boardstock plus the banked emissions from boardstock made in previous years. Two-inch (5.1 cm) thick PS boardstock has a 40-year half-life emitting 2 percent of its CFC content within one year. Table 3-11 estimates the projected emissions from PS boardstock assuming 6 weight percent CFC-12 content and a 40 year CFC half-life.

Disposal Emissions

Polyurethane Foam—

Generally, CFCs are banked in rigid polyurethane foams. For undisturbed foams, leakage of CFC from the closed cells is a very slow process; the CFC half-life may be 100 years or more. Thus, the life of the CFCs in the foam is essentially equal to the life of the product containing the foam; disposal emissions will only occur when the foams are crushed or burned. Since a majority of foams are used in the construction industry (57 percent in 1985), the CFCs will remain in the foams until the homes or buildings burn down or are demolished. It may be possible, however, to remove the foams (much in the way that asbestos products are removed from a building) prior to demolition, and transport them to a CFC recovery facility.

The second largest consumption area for rigid foams (16 percent in 1985) is refrigeration insulations. A Rand report (16) estimates that a refrigerator lasts about 10 to 15 years and contains about 1-1/2 pounds of CFC in its foam. Typically, after the unit has been disposed of, its motor, compressor, and tubing are removed for scrap, and the housing is then sent to a landfill dump where it is crushed (releasing the CFCs) and buried. In other scenarios, the unit is buried intact or abandoned and left to deteriorate. Here again, it may be technically possible to collect old refrigerators and remove them to a CFC recovery facility.

TABLE 3-11. ESTIMATED CFC-12 EMISSIONS[a] FROM MANUFACTURE AND USE OF EXTRUDED PS-FOAM BOARDSTOCK IN THE U.S. (1,000 mt/yr)

Year	PS-Foamed Board Prod.	CFC-12						
		CFC-12 In Foam	Cumulat. Use	Cumulat. Banked	Cumulat. Emitted	Annual Emissions		
						Product	Mfg.	Total
1955	4	0.2	0	0	0	0.0	0.0	0.0
1960	6	0.4	2	2	0	0.0	0.0	0.0
1965	9	0.6	4	4	0	0.1	0.0	0.1
1970	14	0.8	8	7	1	0.1	0.0	0.2
1975	18	1.1	13	11	1	0.2	0.1	0.2
1980	32	1.9	21	18	3	0.3	0.1	0.4
1985	49	2.9	32	27	4	0.4	0.1	0.6
1990	72	4.3	51	43	7	0.7	0.2	0.9
1995	92	5.5	76	64	12	1.0	0.3	1.3
2000	118	7.1	108	90	18	1.4	0.4	1.8
2005	140	8.4	147	120	27	2.0	0.4	2.4
2010	166	9.9	193	155	38	2.5	0.5	3.0
2015	197	11.8	248	196	53	3.2	0.6	3.8

[a]Non-weighted

Source: (3)

Nonpolyurethane Foams--

Similar to rigid PU foams, PS boardstock and phenolic foam insulation can retain a substantial amount of its blowing agents until the time of disposal. The half life of CFCs in PS foam is dependent upon the foam's thickness and density; this can range from 5 years for 0.033 g/cc (2 lb/ft^3), 1.3 cm (1/2 inch) thick foam, to 250 years for 0.048 g/cc (3 lb/ft^3), 7.6 cm (3 inch) thick foam (43). PS foam sheet, on the other hand, has a half life on the order of 1.5 months, and there would be a negligible amount of CFCs retained in the foam sheet products upon disposal. The same would be true for polyolefin and PVC foams which also have a half-life less than one month.

CHARACTERIZATION OF WORLD CFC EMISSIONS FROM RIGID FOAMS

Consumption of CFCs for the manufacture of rigid foams as a percentage of total CFCs appears to be relatively similar for the U.S. and the rest of the world (2). The estimated 1985 consumption of CFC-11 for rigid foams in the world is 133,000 metric tons and for CFC-12 is 53,000 metric tons.

Since the mid 1950s approximately 1.2 million metric tons of CFC-11 and 244,000 metric tons of CFC-12 have been consumed in the worldwide production of rigid foams (1). The accumulated consumption of CFC-11 for rigid foams accounts for roughly 20 percent of the total CFC-11 ever produced. About 53 percent of the CFC-11 consumed for rigid foams is banked in these foams. Similarly, the accumulated consumption of CFC-12 in the production of rigid foams is about three percent of the total CFC-12 ever produced. Six percent of the cumulative CFC-12 used in rigid foam production is banked.

The emissions of CFCs from rigid foam occur from the manufacturing operations and from the CFCs banked in the product. In 1985, the CFC-11 emissions from manufacturing accounted for approximately 10 percent of the consumption or 13,300 metric tons. For the same year, the CFC-12 emissions from manufacturing are estimated at 90 percent of the total world consumption or 47,700 metric tons.

The CFC-11 emissions from the bank are estimated at 0.5 percent of the total CFC-11 and 2 percent of the total CFC-12 in the bank. Therefore, the 1985 world CFC-11 emissions from the bank are approximately 3,400 metric tons and the CFC-12 emissions from the bank are approximately 400 metric tons.

The 1985 total world CFC-11 and CFC-12 emissions from rigid foam manufacturing are 16,700 metric tons and 48,100 metric tons, respectively.

SECTION 4

DESCRIPTION OF CURRENT PROCESS TECHNOLOGY

RIGID POLYURETHANE FOAM PRODUCTION

Polyurethane foams are cellular plastics, generally produced by the reaction of a polyol and a polyisocyanate in the presence of a blowing agent, a catalyst, a surfactant and other specialty additives such as flame retardants. The most commonly used isocyanates in polyurethane foam manufacture are toluene diisocyanate (TDI) and polymeric methylene diphenyl diisocyanate (MDI). Most rigid polyurethane foam is made using PMDI. Typically the ingredients are blended continuously in a high speed mixer and discharged while the mixture polymerizes and expands. The blowing agent is blended into the polyol, or it is metered as a separate stream to the mixing heads of the foam machine. Rigid foams have a wide range of densities, formulations, and uses. In general, rigid polyurethane foam production can be divided into four types of processes: laminated foam core panel manufacture, poured foam production, sprayed foam application, and bunstock production. The following paragraphs describe these processes.

Laminated Boardstock

Rigid polyurethane laminated boardstock production is similar to flexible foam bunstock production. In this process, the liquid polyol and isocyanate mixture is poured as a thin layer onto a facing material which is moving continuously on a conveyor. A short distance beyond the point of foam application, an upper facing material is applied to the top of the expanding foam mixture. Film facing materials include asphalt or tar paper, aluminum, steel, fiberboard, or gypsum. As it moves along the conveyor, the foam expands to a thickness controlled by nip rollers and upper and lower conveyers. Figure 4-1 presents a schematic of a typical laminated boardstock operation.

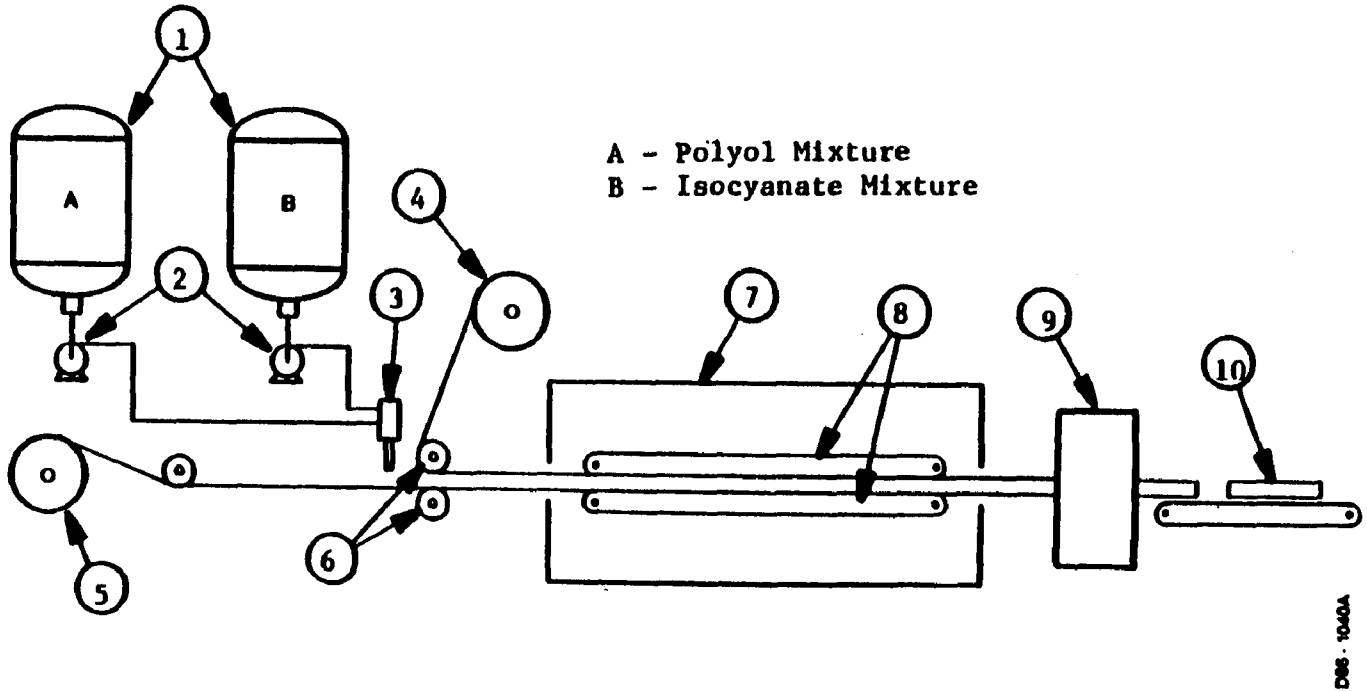

1) agitated material tanks; 2) metering pumps; 3) traversing mix-head; 4) top facing roll; 5) bottom facing material; 6) adjustable nip rollers; 7) oven and conveyer; 8) expanding foam and adjustable panels; 9) transverse cutter; 10) cut foam.

Figure 4-1. Laminated foam boardstock line.

Laminated boardstock production emits relatively small quantities of CFCs. The emissions occurring during initial mixing of foam ingredients are roughly one percent. The losses occurring as the foam is dispensed is approximately 1.5 percent, bringing the total manufacturing emissions to 2.5 percent of the initial charge (10).

For laminated rigid polyurethane foams, a large percentage of the CFC blowing agent is trapped in the foam for up to hundreds of years. The relatively small quantities of CFCs emitted during the manufacturing steps could possibly be controlled through add-on controls such as carbon adsorption. However, control of in-use, or product emissions would require a different approach. Using lower ozone depleting blowing agents or replacing the foam products with non-CFC containing materials are two approaches to emissions control. Laminated foams are used as sheathing insulation for buildings and homes. They have high insulating efficiencies and replacing them with alternative non-CFC sheathing materials would require greater thicknesses to obtain equivalent insulation. Alternative sheathing materials include expandable polystyrene (EPS) board, extruded PS board, fiberboard, and others. The very long half life of CFCs in rigid polyurethane foams causes much of the CFC to be retained in the foam even at the end of the foam's useful life. This gives rise to the possibility of recovering blowing agent from discarded foam products. This would require initiation of a foam scrap collection program in which collected foam would be transported to a facility where the foam would be crushed and the CFCs adsorbed on carbon beds.

Pour-in-place/Injected Foams

The pour-in-place or injected foam process involves pouring or injecting the liquid polyurethane mixture into spaces within rigid structures such as refrigerator walls, refrigerated tanks, and building walls. Foaming progresses in place to fill all crevices and form a continuous mold. The final product is a continuous foam structure with excellent insulating properties. Figure 4-2 shows the equipment used in a foam injection operation.

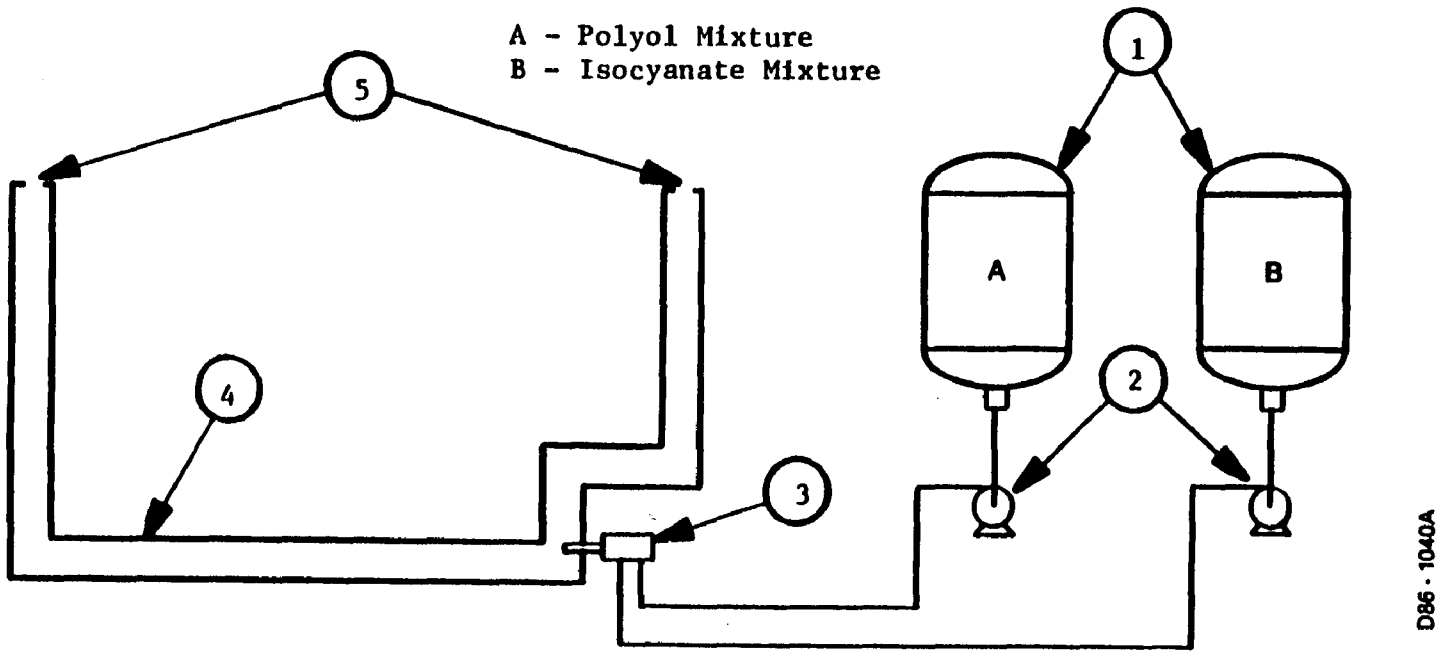

1) agitated material tanks; 2) metering pumps; 3) mix-head/injector; 4) refrigerator housing; 5) vent holes.

Figure 4-2. Foam injection operation.

Pour/injection systems have widely varying emission rates. This is because of the variety of cavities into which the foams are poured. These systems also employ CFC-12 as a frothing agent (17). The rigid polyurethane foam is ejected from a frothing device pre-expanded about 20 to 30 percent and has the consistency much like an aerosol foam. It is estimated that, for a typical freezer insulating operation, 10 percent of the CFC-11 and 35 to 85 percent of the CFC-12 is emitted (9,10). An additional one percent of CFC-11 and one percent of CFC-12 is lost in mixing and handling. The frothing process is in decline because of advances in poured-in-place formulations (18).

For poured foams, carbon adsorption could be used to collect CFCs emitted during both manufacture and disposal of the product. Reduction of in-use emissions would require using alternate, low ozone depleting blowing agents or non-CFC containing products. Before the introduction of polyurethanes, refrigerated appliances were insulated with glass fiber insulation. However, an emphasis on new materials and designs for refrigeration systems including higher grade insulation has resulted from more stringent appliance energy standards. Thus, it is likely new materials or system designs will play an important role in the refrigeration insulation options for the future.

Sprayed Foams

Rigid polyurethane foam may also be produced by spraying the liquid chemical mix directly from the mixing head onto the surfaces requiring insulation. Sprayed foams are often used for on-site application of rigid thermal insulation. Typical surfaces which require a foam spray include storage tanks, piping, or roofs. As with pouring operations, froth spraying has become a convenient method of achieving the desired density and skin thickness. Figure 4-3 shows setup and use of a typical foam sprayer.

The mixing and handling emissions of CFCs in spraying operations are as low as 0.5 percent of the total used in formulation. This is because the

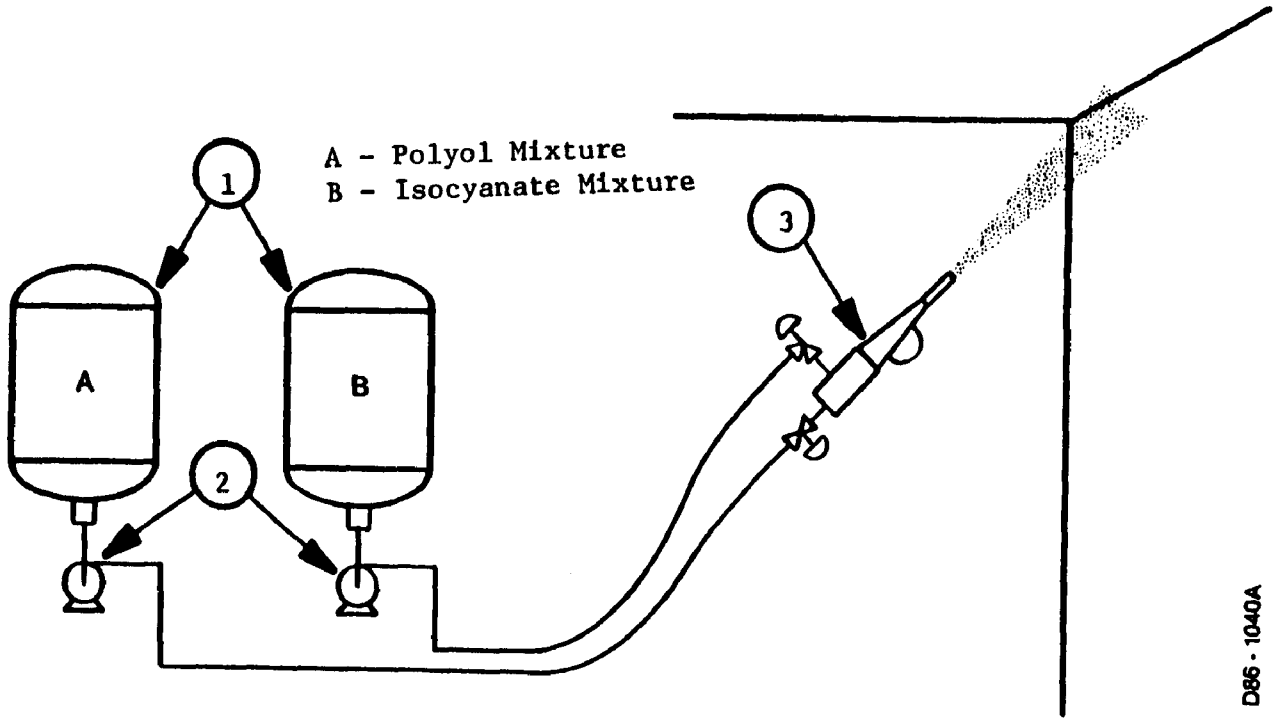

1) material tanks, 2) metering pumps, 3) mixhead/sprayer.

Figure 4-3. Sprayed-foam operations.

pray system uses a liquid mixture which is usually prepared by a supply company. These suppliers prepare mixtures in large volumes allowing tighter control of CFC emissions.

Spraying losses are dependent upon the conditions during the spraying operation. It is estimated that 10 percent of the CFC-11 and 20 to 90 percent of the CFC-12 are emitted during spraying (9,10,22). Because the CFC-12 is used as a frothing agent, its emissions are expected to be relatively high.

The nature of the sprayed foam operation all but eliminates the possibility of emissions recovery during spraying. Additionally, disposal recovery would be severely limited because removal of sprayed-on foams from their substrate would most likely rupture the foam cells and release the CFCs. The primary control options would be using alternative blowing agents or non-CFC insulation.

Bunstock Foams

Rigid polyurethane foam bunstock is manufactured on both a small and large scale. The manufacturing facility for rigid PU foam bunstock is very similar to that for flexible PU foam bunstock manufacture. In this process, a liquid polyol mixture is poured as a thin layer onto a continuously moving conveyor where it expands to form a continuous block, or bun, of foam. Adjustable top panels control bun height. After oven curing, the foam may be sliced to specific thicknesses by a variety of sawing methods. The slices are then either cut into flat boards or profiled for such applications as pipe insulation. Figure 4-4 shows the layout of a typical bunstock production unit. Improvements in laminate technology have led to the decline in bunstock manufacturing.

A majority of the CFC emissions from the manufacture of bunstock occur as the foam is being dispensed onto the moving conveyer. This loss amounts to 13 percent of the CFCs initially included in the foam ingredients (10). An

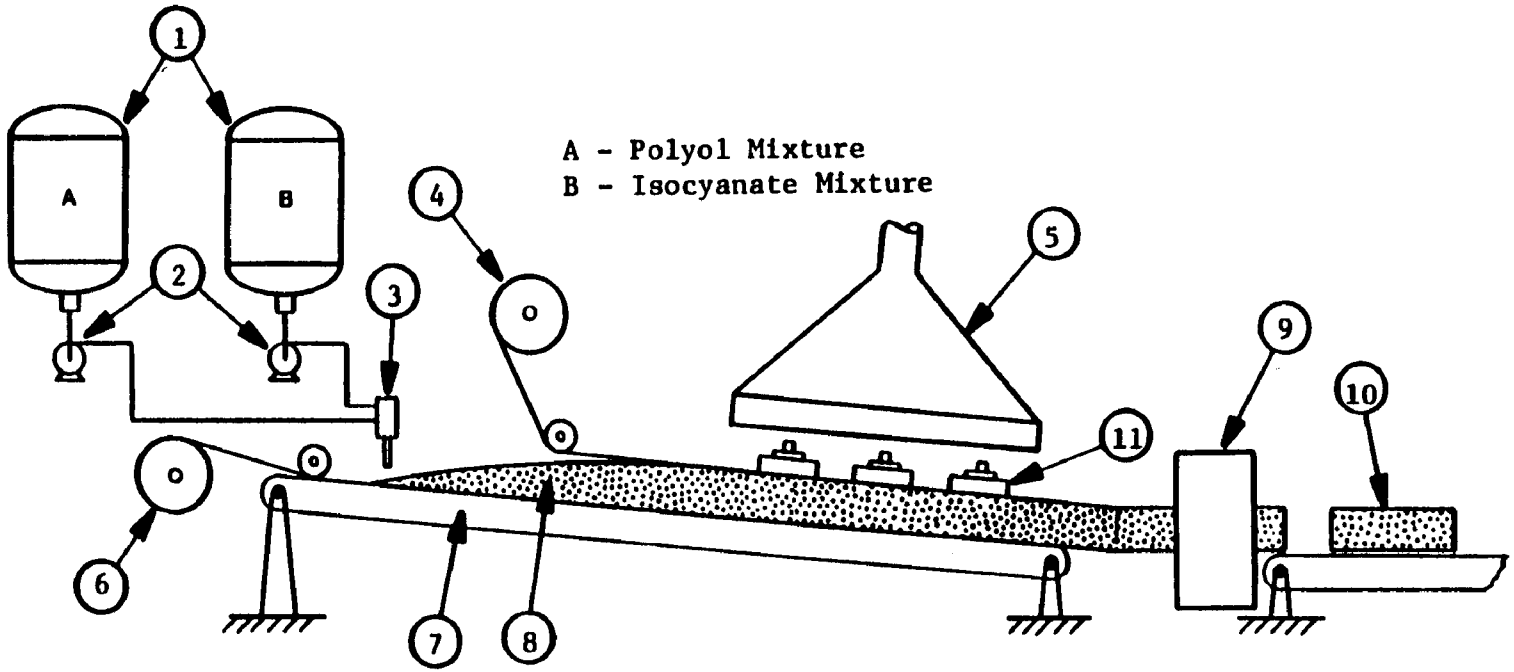

1) agitated material tanks; 2) metering pumps; 3) traversing mix-head; 4) top paper roll; 5) exhaust hood; 6) bottom paper roll; 7) conveyer; 8) expanding foam; 9) transverse cutter; 10) cut foam bun; 11) adjustable top panels.

Figure 4-4. Rigid polyurethane bunstock foam line.

additional five percent is lost as the closed cells are broken in the cutting and trimming operations. The emissions occurring during initial mixture of foam ingredients are roughly one percent bringing the total emissions to 19 percent of the initial charge.

The CFC control options for bunstock foams are the same as those for laminated sheet foams. Carbon adsorption could be used to reduce manufacturing and disposal emissions. Reduction of product emissions would require alternate blowing agents or non-CFC insulation materials.

RIGID POLYSTYRENE FOAM PRODUCTION

Polystyrene foam is formed by one of two general methods. It is either extruded into sheet, film, or boardstock; or it is formed from expandable beads.

Extruded Polystyrene

In the extrusion process, polystyrene resin is mixed with additives and melted to a low viscosity in a two-stage screw extruder. The fluorocarbon (or hydrocarbon) blowing agent is injected under high pressure into the extruder, where it is dispersed in the polymer melt. This mixture is cooled and forced through a die under controlled pressure (14). The die can be of several shapes; a round die forms rod-shaped foam, a slit die is used to form a block or slab, and an annular-shaped die is used to form a tube which is slit to make foam sheets. As the molten polymer exits the die, the dissolved blowing agent vaporizes causing the plastic to foam. The final stages involve cooling, shaping, cutting, or winding the foam into the desired form. Extruded foam is normally aged 24 hours prior to thermoforming the final product. Approximately 80 percent of all extruded PS foam produced consists of foam sheet. This material is thermoformed into a variety of products including single service items (such as plates, bowls, and cups) fast food cartons, egg cartons, and meat trays. The remaining 20 percent of PS foam

production is primarily boardstock which is not thermoformed. This material is most commonly used as a construction insulation material.

The thermoforming step of most PS foam sheet manufacturing processes generates a substantial amount of foam scrap. In some cases, 30 to 40 percent of the extruder feed will eventually become scrap pieces. Because this occurs, manufacturing processes commonly include a grinding and repelletizing step after the final cutting and thermoforming steps. The recovered scrap foam pellets are recycled to the extruder feed. The typical extruder feed mixture is 65% virgin PS and 35% recycled PS. A flow diagram of an extruded polystyrene sheet manufacturing process using scrap recovery is shown in Figure 4-5.

In polystyrene-foam manufacture, CFCs are emitted at various points in the process. Table 4-1 summarizes the emissions generated in each phase of sheet and boardstock manufacturing. As can be seen from the table, the relatively thin extruded sheet has much more prompt emissions of CFCs which occur during the extrusion and thermoforming operations. However, based on recent information, the emissions from extrusion, aging, and thermoforming may be roughly equal (52). In addition, these emissions may be lower and considered fugitive rather than being controllable as indicated in Table 4-1, with a high percentage of CFCs leaving the plant with the finished product (52). Boardstock, on the other hand, is much thicker and holds the majority of CFC in the foam cells as a bank of CFC.

Expandable Polystyrene

The majority of polystyrene foam is extruded; however, a great deal of molded foam products are manufactured from expandable polystyrene (EPS) beads. Insulating materials, packaging, drinking cups, ice chests, and flotation material are typical EPS foam products. The beads are formed during the manufacture of the polystyrene itself, in the suspension polymerization phase (19). The blowing agents, primarily pentane, are incorporated directly into the beads.

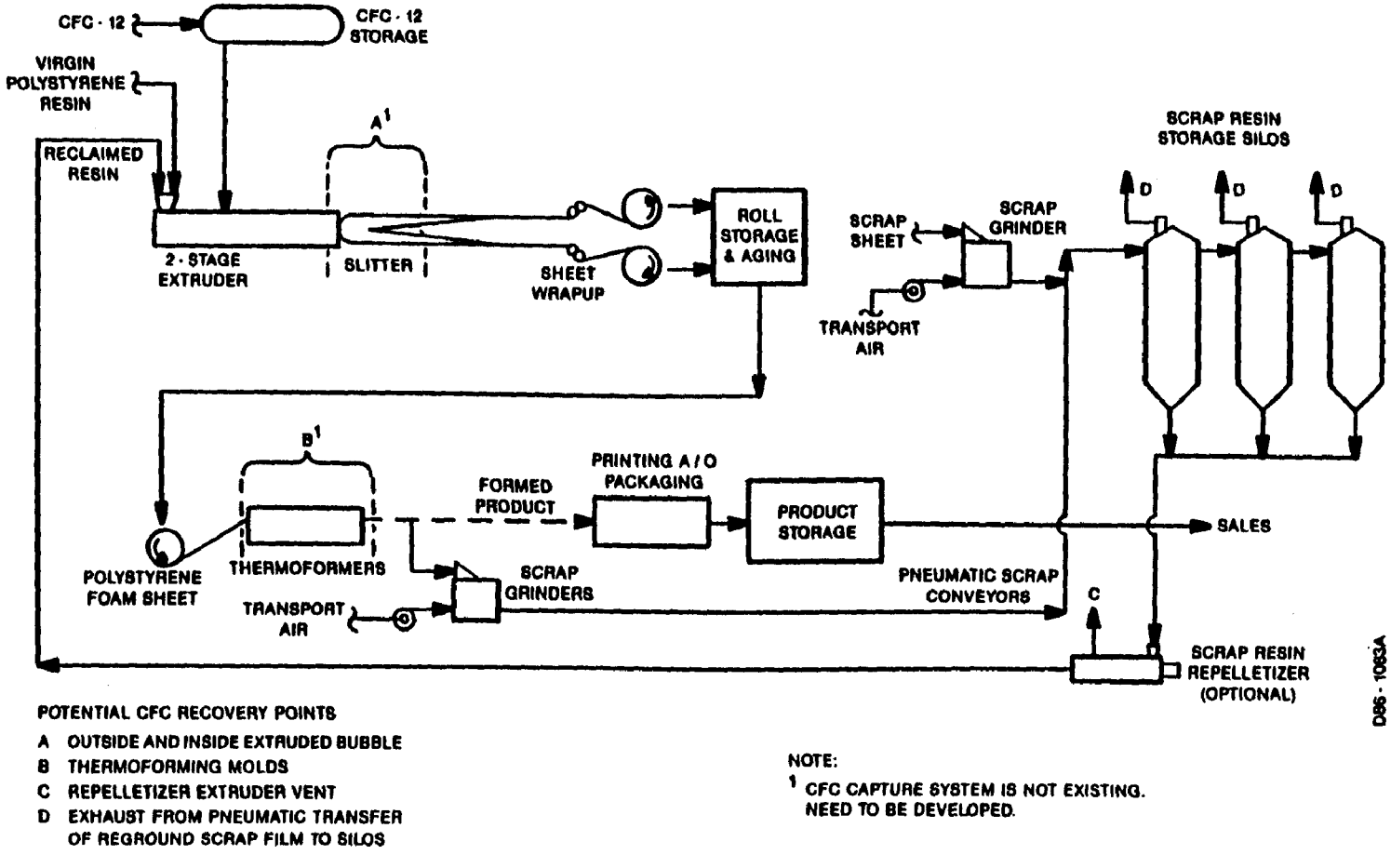

POTENTIAL CFC RECOVERY POINTS

A OUTSIDE AND INSIDE EXTRUDED BUBBLE
B THERMOFORMING MOLDS
C REPELLETIZER EXTRUDER VENT
D EXHAUST FROM PNEUMATIC TRANSFER OF REGROUND SCRAP FILM TO SILOS

NOTE:
[1] CFC CAPTURE SYSTEM IS NOT EXISTING. NEED TO BE DEVELOPED.

Figure 4-5. Flow diagram of a typical polystyrene foam sheet manufacturing process.

TABLE 4-1. SUMMARY OF CFC EMISSION SOURCES AND EXAMPLE DISTRIBUTION IN POLYSTYRENE FOAM MANUFACTURING

	Percent From Extruded Sheet	Percent From Extruded Boardstock
Manufacturing Losses		
Extrusion Losses	34	5
Intermediate Storage	4	0
Thermoforming	5	--
Regrinding Scrap	15	--
Reextruding Scrap	1	--
Prompt Foam Cell Losses (within first year)	41	2
Banked Emissions	0	93
	100.0	100.0

Source: (18,32)

Note: These estimates may vary among producers based on blowing agent content and process conditions.

The foaming process begins as the beads are heated with steam and partially expanded. The pliable beads are then transferred to molding stations and stored for approximately 6 to 24 hours while the beads cool and reach an equilibrium. Finally, the beads are conveyed to the mold, usually by air, where they expand to their final form. The preexpanded polystyrene bead is heated in the mold by steam through perforations in the mold, or by means of steam probes. During this final expansion, the beads melt together slightly which allows them to adhere to each other, while at the same time, a smooth outer skin is formed along the mold walls. Once the polystyrene bead has expanded to nearly fill the mold, the steam is stopped and the beads expand to their final size.

In addition to the use of pentane as a blowing agent, a mixture of CFCs and hydrocarbons are also used as blowing agents by several expandable PS foam manufacturers to produce expandable PS foam loose fill packaging (49). These products are produced by two methods: 1) pressurized extrusion of a high density pellet which is later expanded or 2) extrusion with expansion at the extruder die.

SECTION 5
CONTROL/RECYCLE TECHNOLOGIES FOR CFC-12 IN POLYSTYRENE FOAM SHEET MANUFACTURING

A possible approach to reducing CFC-12 emissions in the manufacture of polystyrene foam sheet is to apply capture/recovery or destruction systems as an add-on to the foam process. Such systems can be categorized as follows:

- carbon adsorption with CFC-12 recovery;
- direct flame or catalytic incineration of CFC-12 in plant exhausts;
- absorption (liquid scrubbing) with CFC-12 recovery; and
- vapor condensation and recovery.

The following discussion will stress application of adsorption recovery, although some discussion of other alternatives is warranted to point out the difficulties of applying these technologies to CFC-12 emission control.

CARBON ADSORPTION AND STEAM DESORPTION SYSTEMS

Activated carbon adsorption has been applied commercially for recovery of expensive solvents for many years. Such systems have potential for application to CFC-12 capture and recovery. However, the use of carbon adsorption and CFC-12 recovery has not been implemented commercially for the manufacture of polystyrene sheet. The probable main reason for this is the high capital expenditure required for the adsorption/regeneration/recovery hardware, as compared to the relatively low total value of the recovered CFC-12.

Process Engineering and Operating Factors

The physical principle applied in adsorption/recycle processes is based on the adsorptive affinity of an activated carbon surface for organic molecules, such as CFC-12. These compounds are preferentially separated from a gas stream and retained on the surface of activated carbon particles. In practice, a large volume of carbon particles are contained within a vessel, referred to as the adsorbent bed, to provide a large carbon surface area. The CFC-12 molecules are retained, or adsorbed, on the carbon and then are released, or desorbed, when the carbon particles are heated. Steam is generally used to heat the carbon particles and displace the desorbed organic material. By condensing this stream, the organic material can be separated from the steam condensate (decanted), recovered, and reused.

A schematic illustrating the main features of this process appears in Figure 5-1. At least two adsorbent bed vessels in parallel, each containing activated carbon particles, are required to provide alternating cycles of adsorption and regeneration. A boiler and/or other heating equipment is used to provide stream and/or heated air for bed regeneration. Usually, the regeneration stream is arranged to flow countercurrent to the direction of the treated air stream (although co-current regeneration is sometimes used). A cool or chilled water condenser is included to condense the mixture of steam and CFC-12 after desorption from the carbon beds. Finally, a decanter unit separates the two phases, returning the reclaimed CFC-12 phase to the foam line CFC feed tank, or to further purification if needed.

A number of key engineering factors can be identified in applying an adsorption process to recovery of CFC-12 in PS foam plants. The most important of these are:

- reducing the volume (flow rate) of air to be treated,
- design of an efficient regeneration/condensation unit,

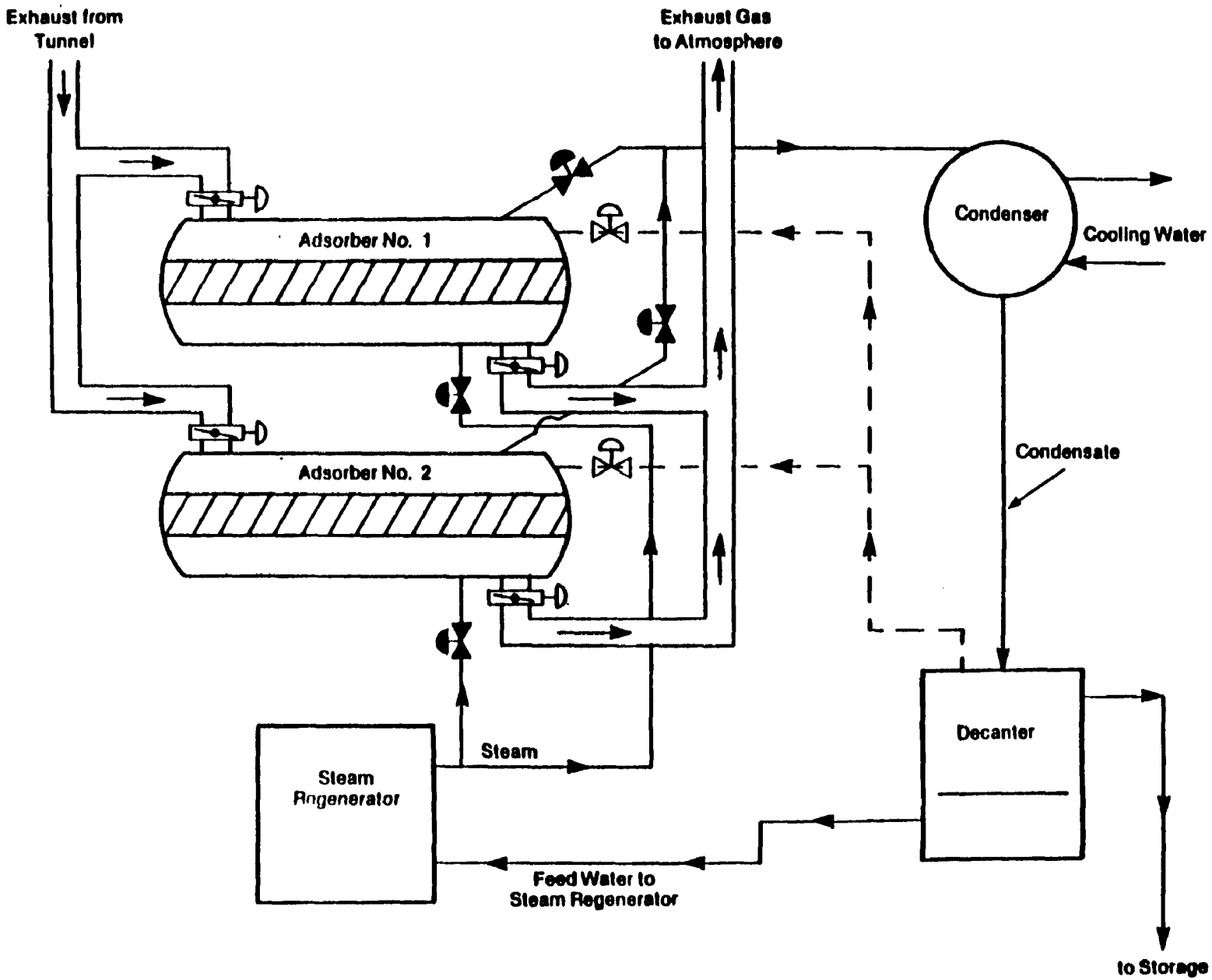

Figure 5-1. Schematic flow diagram of typical carbon adsorption/solvent recycle process.

- possible corrosion problems due to decomposition of the CFC, and

- uniformity and quality of the reclaimed CFC-12.

In addition, if trace contaminants, such as resin fines or residual styrene monomer, exist in the exhaust gas streams, pretreatment of the gas stream before the carbon beds will be required.

In general, the capital costs of the CFC-12 vapor collection system and the carbon adsorption system are proportional to the volume flow of air to be treated. The distribution of CFC-12 emissions with the process also affects the efficiency of recovery. Emissions characteristics may differ widely between various foam processes. Table 5-1 summarizes typical emission distributions for a PS-foam sheet process. For most existing PS foam processes, the exhaust concentration of CFC-12 is relatively low. As shown in Table 5-1, CFC-12 concentrations are 1000 ppm or less in all areas of the facility. Effective design of a carbon adsorption/recovery system must therefore incorporate ventilation designs which reduce volume and minimize dilution of the emitted CFC-12.

Proposed equipment modifications that would minimize air flow and deliver the highest possible concentration of CFC-12 to the carbon adsorber involve thorough enclosure of the largest CFC emissions sources to reduce the volume of ventilation air. Any smaller sources, such as the scrap extruder, which already have high CFC concentrations in their exhausts, can also be combined and routed to a recovery device.

Another possible means of decreasing the total air flow to the carbon adsorbers is to cascade the dilute exhaust from one zone or collection station to another with a higher CFC concentration. Also, air curtains can be incorporated in the overall system to help contain emissions within the work area, and subsequently, the bulk of the air would be exhausted from around the

TABLE 5-1. CFC EMISSION SOURCES IN PS-FOAM SHEET MANUFACTURE

Operation	Emissions (% of CFC Fed)	CFC-12 Concentration (ppm)
Extrusion	34	200[a]
Rolled Film Storage	4	35
Thermoformer	5	75
Regrinding Scrap	15	85[b]
Reextruding Scrap	1	1000[c]
Final Product	41	

Source: (32)

[a] Measured at slitter.

[b] Measured at storage silo vents.

[c] Measured at extruder vent.

Note: These estimates may vary among producers based on blowing agent content and process conditions. Based on recent data, the emissions may be lower, with the extrusion, intermediate storage, and thermoforming emissions being roughly equal and considered fugitive rather than controllable (52).

rocess CFC sources. Such an elaborate flow scheme is not incorporated in the esign and cost analysis discussed in this report, but is suggested here to ndicate the potential for enhanced overall emission control.

Regeneration of the carbon beds can be accomplished by purging with ow-pressure steam. Generally, the purge steam is applied in the opposite low direction to the CFC-laden exhaust gas. An alternative procedure would e to regenerate the beds using a heated inert gas stream (such as air or itrogen) rather than steam. After steam regeneration, it is desirable to dry he carbon bed, using ambient air. This feature is common to many existing ull-scale solvent recovery systems, and if omitted, the bed capacity will be dversely affected.

Corrosion problems with CFC-12 are typically less severe than are regularly encountered in halocarbon solvent recovery systems. Although CFC-12 is relatively stable, when it comes into contact with elevated temperature surfaces, the molecules may crack, or decompose, to hydrofluoric acid (HF) and/or ydrochloric acid (HCl). These compounds are particularly corrosive to duct ork. For this reason, it is generally recommended that adsorbent bed vessels e constructed of corrosion resistant materials (10).

Quality and uniformity of the reclaimed CFC-12 is an important issue in he economic feasibility of recovery systems because of the potential operating cost credit for recovered blowing agent. It is possible that the CFC-12 recovered by carbon adsorption would not require repurification before reuse, and therefore would be a cost credit. However, additional onsite processing including drying and distillation, may be required to produce an acceptable product. Additionally, if the material can not be reused, it would have to be sold to a recovery or disposal company, resulting in an added cost.

Control Costs and Effectiveness

From a technical standpoint, there are two key factors that determine the effectiveness of carbon adsorption control of CFC-12 emissions at a particular facility. These are the efficiency of CFC-12 emission capture and the removal efficiency of the activated carbon bed. The emissions would be collected from the process exhaust and plant ventilation gas streams. Local collection efficiencies within the plant limit the fraction of emissions that can be controlled. The effectiveness of emission control would vary from plant to plant, but it is estimated that for a typical two extruder, four thermoformer plant, roughly 42 percent of the CFC-12 emissions could be recovered. This estimate is discussed further in the following subsections of this report.

The cost effectiveness of this control method can be expressed as the dollar cost per unit CFC-12 emission averted. Control expenditures consist of the annualized capital recovery and operating costs less the credit obtained for reclaimed blowing agent. In an analysis of a CFC-12 carbon adsorption/recovery system for a two extruder plant, the cost of CFC control is estimated to be $0.72 per kilogram ($0.33/lb) of CFC-12 controlled. If the recovered CFC-12 is reusable the control cost could be much lower or even generate an overall credit.

Clearly, significant increases in CFC-12 price and/or recovery efficiency would provide economic incentive for implementation of control by foamers, and would also speed recovery of the investment. It is apparent that optimal design of the ventilation system for high capture efficiency with minimal capital cost is advantageous. Pilot plant studies would be useful to systematically define the critical design parameters in achieving high recovery efficiency at lowest system cost.

Safety and Environmental Factors

There are no apparent effects on the health and safety of workers in the polystyrene foam industry connected with use of carbon adsorption/recovery technology.

Wastes from the carbon adsorption process consist of spent carbon and aqueous condensate. Recycle of steam condensate from the CFC-12 recovery operation is feasible, although it may be advisable to include a purification step or purge stream in the recycle loop to avoid recycling of organic impurities. Disposal of condensate is also possible providing local and Federal regulations allow it. If distillation is used, residues from purification of the reclaimed blowing agent may represent another potential disposal cost.

No studies to date have examined the impact of waste disposal associated with carbon adsorption in CFC-12 recovery applications. It is likely that spent carbon could be disposed of by incineration in the process steam boilers at the foam plant. It may also be possible to thermally regenerate the spent carbon in order to avoid high replacement costs. Land disposal of the activated carbon waste may not be possible due to the current EPA ban on chlorinated wastes.

Current Status

To date there has been no commercial scale carbon adsorption and recovery system in continuous operation at a polystyrene foam facility. Additionally, there has been no research to technical development in the area of CFC-12 carbon adsorption for polystyrene foam sheet extrusion facilities. The fact that nearly 60 percent of the CFC-12 used for blowing this foam is lost in the processing area indicates the potential for raw material cost savings. The primary barrier to adaptation of this technology appears to be the capital investment involved and no regulatory incentive for control.

Economic Factors

The chief economic factor in implementation of carbon adsorption for control of CFC-12 emissions from rigid polystyrene foam sheet plants is the producer's ability to recover the capital expenditure, and remain competitive. The polystyrene foam industry is sufficiently mature and competitive that individual producers must seek to minimize costs, even on a short term basis. To remain competitive, small foamers might find it difficult, if not impossible, to pass along capital recovery costs; it is these smaller plants for which the credit for reclaimed blowing agent is smallest in comparison to the necessary capital investment.

While the capital expense of retrofitting a plant for a carbon adsorption system might be a barrier for medium and small foamers, actual overall annual savings may be experienced due to reduced blowing agent consumption. In practice, the economics will vary considerably from plant to plant because of the wide variety of processing facility configurations and sizes. Also, in order to gain the benefit of the CFC recovery, the foamer must have the ability to generate the capital for the recovery system. A typical facility will require at least several hundred thousand dollars for this system.

For foam processors who are currently using CFC blowing agents, there is the alternative of using hydrocarbon blowing agents. Although the hydrocarbons are cheaper, the foamer may be hesitant to switch to hydrocarbons because of fire hazards. Additionally, small foamers may not be able to secure proper insurance for their operations. Many larger firms that use hydrocarbons are self insured. Finally, even if the foamer chose to switch to hydrocarbons over carbon adsorption with CFC-12, the foamer may still be required to control hydrocarbon emissions as a result of current VOC emissions regulations. The VOC control technology is carbon adsorption or incineration.

Engineering and Cost Analyses

It is anticipated that the greatest potential for economical capture and recovery of CFC-12 emissions in extruded PS foam plants exists at the foam extruder, scrap silo vents, and scrap repelletizer vent. While additional material could be collected by using extensive plant ventilation schemes, the higher capital expenditure may not be justified, since the incremental increase in recovery would be low.

For this study, calculations are performed for a model plant which consists of two extruders and four thermofoamers. This represents a typical PS-sheet facility. The total production of thermoformable foam sheet would be 4,100 metric tons (9 million pounds) per year. At 6 percent blowing agent content in the initial foam formulation, this plant would use about 245 metric tons of CFC-12 per year. This example facility will be used to assess the economic feasibility of CFC-12 capture and recovery using carbon adsorption.

The important parameters characterizing the example foam plant used in this engineering analysis are summarized in Table 5-2. These parameters are representative of a medium to small sized facility, and the production rates are typical for these plants. As mentioned earlier, the areas showing the best potential for CFC recovery are the extruder, the scrap silo vents, and the scrap repelletizer. These sources represent 50 percent of the total emissions (because 40 percent of the emissions are from the product) and 85 percent of the manufacturing emissions. The exhaust system capture efficiency is estimated to be about 88 percent for the CFC emissions from the controlled sources. Further activated carbon adsorption beds can be designed to adsorb at least 95 percent of the CFC-12 present in the exhaust air stream. Therefore, the system's net capture efficiency would be about 42 percent of the CFC-12 consumed. This is approximately 102 metric tons of CFC-12 per year.

Figure 5-2 shows a schematic flow diagram for the model plant. The flow diagram shows all raw material addition points and CFC emission sources.

TABLE 5-2. MODEL POLYSTYRENE EXTRUDED FOAM SHEET PLANT OPERATING PARAMETERS

Annual Production, mt (lbs.)	4,100 (9 million)
Production Rate, kg/hr (lb/hr)	680 (1500)
Number of Extruders	2 @ 340 kg/hr (2 @ 750 lb/hr)
Foam Sheet Web Width, m (ft)	1.2 (4)
Extrudate Velocity, m/min (ft/min)	0.6 (2)
Typical Initial Foam Formulation	CFC-12 Blown
Polystyrene	93% w
Blowing Agent	6% w
Additives	1% w
Number of Thermoformers	4
Percent Scrap in Feed	35

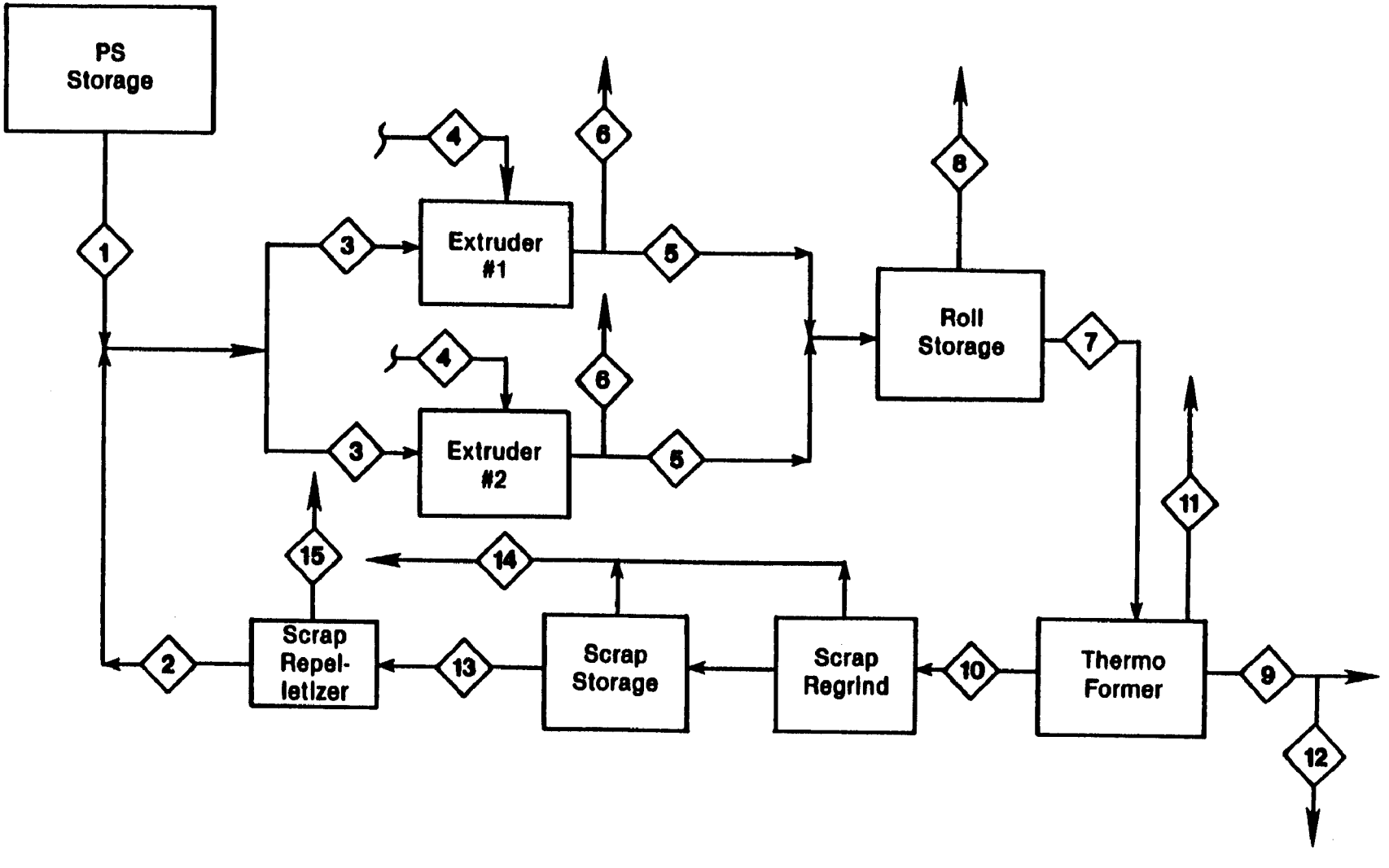

Figure 5-2. Schematic flow diagram for polystyrene foam sheet model plant. (Streams 6, 14, 15 sent to carbon adsorption system)

Table 5-3 contains a material balance for the model plant showing the flow rates of polystyrene and CFC-12 through the various processing steps. From the material balance, the total CFC amount sent to the carbon adsorber is 0.30 kg/min., while the total exhaust flowrate is 55 m^3/min. (approximately 2000 cfm).

Figure 5-3 depicts the proposed carbon adsorption/recovery system for CFC-12. Two beds in parallel are required for the design throughput; one bed operates in adsorption mode while the other is being regenerated. Steam for desorption and bed regeneration is provided by a boiler unit. The regeneration steam is routed through the beds countercurrent to the direction of treated air flow (for more efficient desorption), and then through a water-cooled condenser. The condensed steam and CFC-12 vapor are separated in knockout vessel. The condensate is recycled to the boiler feedwater makeup line, and the CFC-12 vapor passes on to a compression system. In the compression step, the CFC is passed through a drier, and then compressed to a liquid. The liquid is then cooled and, depending upon its purity, either recycled to the CFC-12 feed storage tank, or sent to disposal tanks.

Carbon Bed Design--

Based on the performance of carbon adsorption systems in other service, carbon bed recovery efficiencies in excess of 95 percent can be easily attained. For the example system, the removal rate of CFC-12 from the air stream is 0.29 kg/min (0.63 lb/min) and the exhaust air flow is 0.91 Nm^3/s (1,900 scfm), which is assumed to enter the bed at about 21°C (70°F). Adsorption capacity for a given activated carbon as a function of temperature and CFC concentration in the gas stream can be determined from experimentally derived relationships referred to as isotherms. The CFC-12 isotherms for Calgon BPL® activated carbon used in the example system appear in Figure 5-4.

Using the available isotherm data, a realistic design basis can be derived from CFC-12 adsorption beds. At a concentration of 1070 ppm, the CFC-12 partial pressure is 0.72 Pa (0.015 psia) based on a bed temperature of 21°C

TABLE 5-3. POLYSTYRENE/CFC MATERIAL BALANCE

Stream Name	1 Fresh PS Feed	2 Regrind PS Feed	3 Combined[a] PS Feed	4 CFC[a] Feed	5 Extruded PS Sheet	6 Extruder[a] Emissions	7 PS From Roll Storage	8 CFC Emissions From Roll	9 Thermo-formed Product	10 Thermo-form Waste	11 CFC Thermoform Emissions	12 Product Emissions	13 Scrap	14 Scrap Emissions	15 Pelletizer Emissions
PS, kg/min	7.37	3.97	5.67	—	5.67	—	11.3	—	7.37	3.97	—	—	3.97	—	—
CFC, kg/min	—	0.027	0.014	0.327	0.225	0.116	0.422	0.0272	0.252	0.136	0.034	0.252	0.0337	0.102	0.0068
CFC Capture Eff., %	—	—	—	—	—	88	—	0	—	—	0	0	—	88	88
CFC Collected, kg/min	—	—	—	—	—	0.102	—	—	—	—	—	—	—	0.0898	0.0060
Exhaust Flow, m^3/min	—	—	—	—	—	16	—	—	—	—	—	—	—	17.0	5.66
, cfm	—	—	—	—	—	565	—	—	—	—	—	—	—	600	200
Exhaust CFC Conc., g/m^3	—	—	—	—	—	6.38	—	—	—	—	—	—	—	5.28	1.06
, ppmv	—	—	—	—	—	1250	—	—	—	—	—	—	—	1030	207

[a]Represents 1/2 total amount.

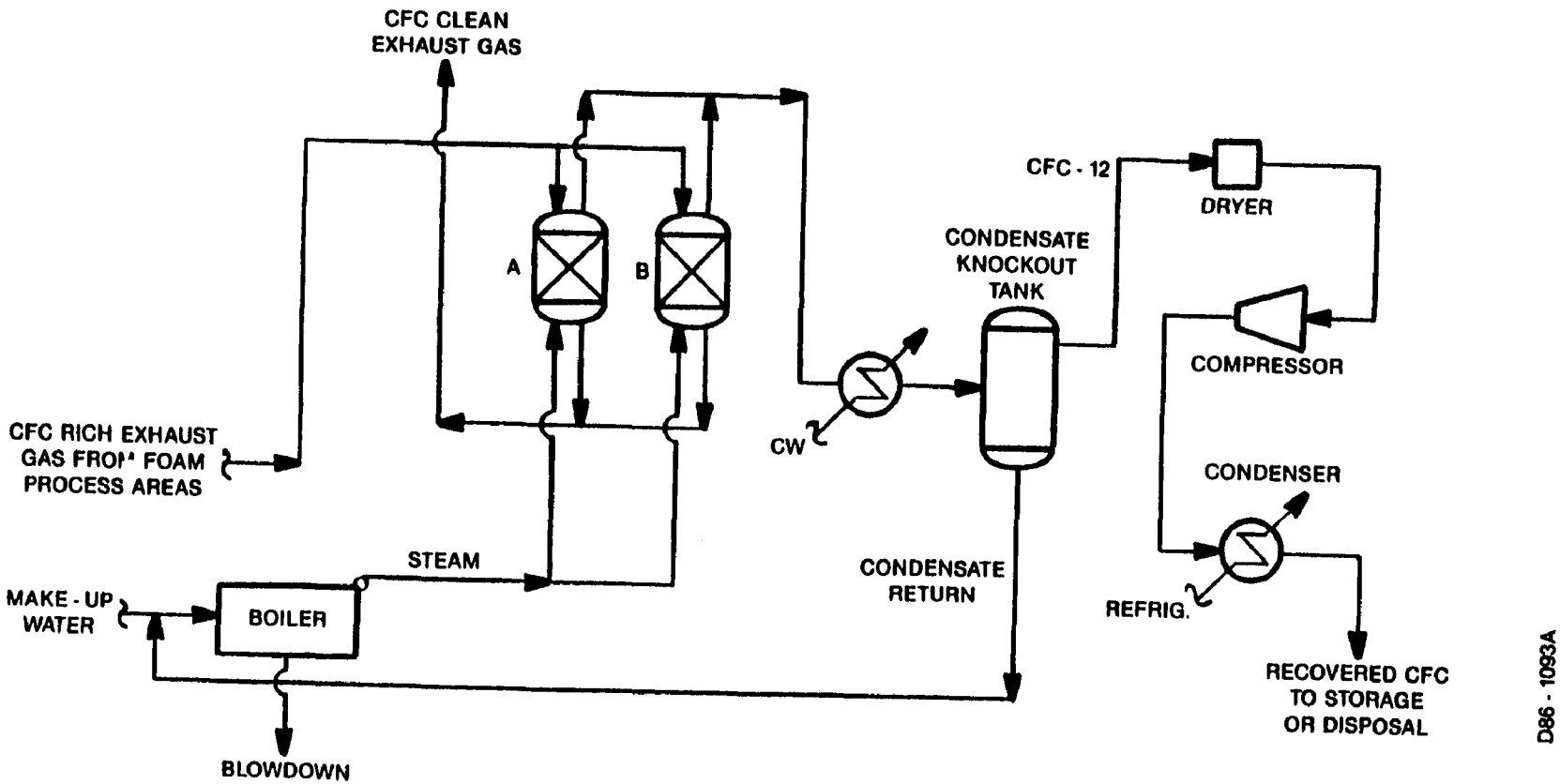

Figure 5-3. Proposed CFC-12 carbon adsorption/recovery system for a polystyrene foam sheet extrusion plant.

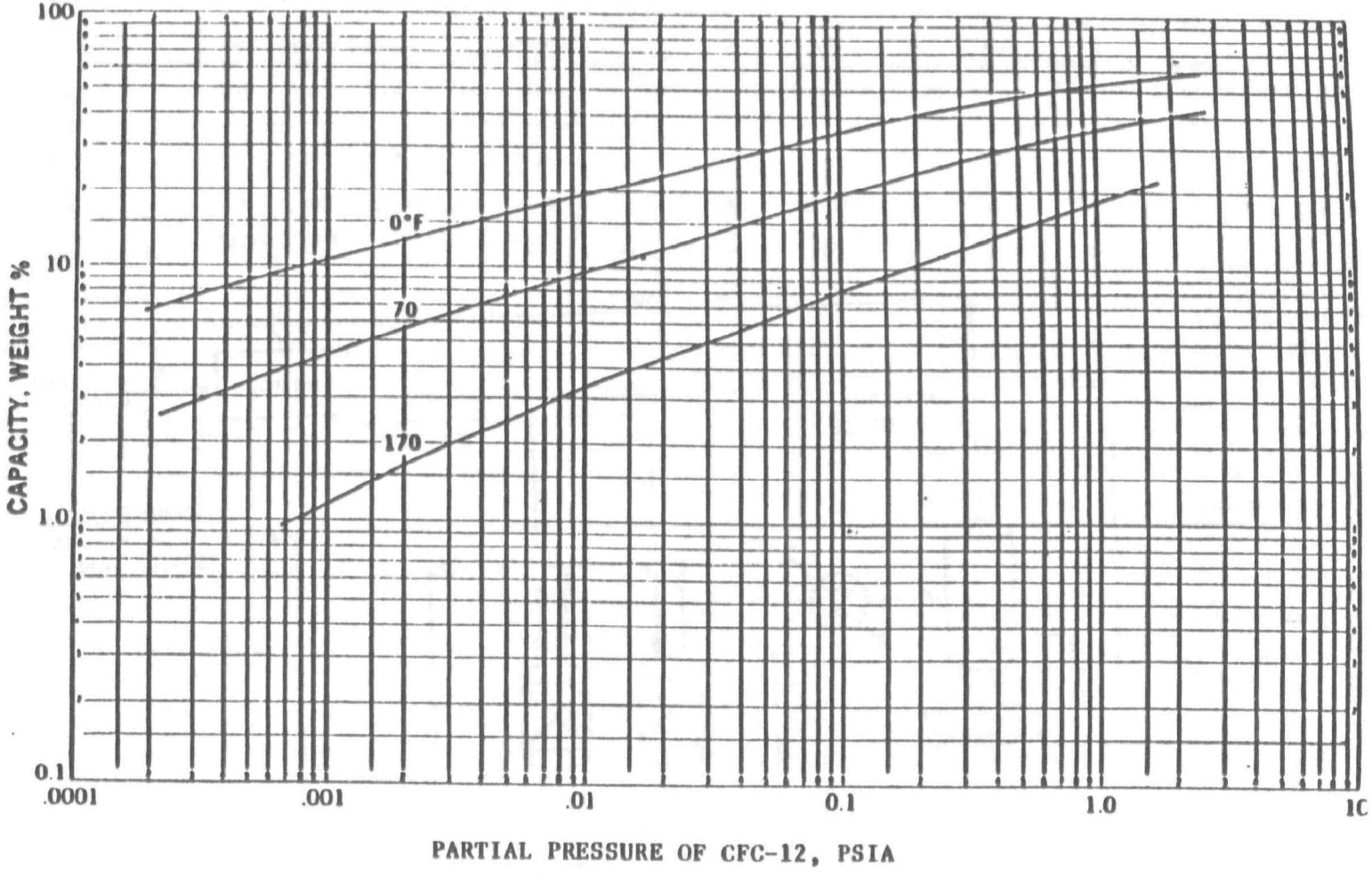

Figure 5-4. CFC-12 adsorption on BPL© activated carbon.

Source: (54)

(70°F). For these conditions the BPL® carbon adsorption capacity can be estimated to be about 10 weight percent. An appropriate design rule is that the working bed capacity is one half of this value, or 5 weight percent. This allows for residual CFC-12 remaining in the bed after each regeneration cycle, (i.e., the CFC heel) and for the loss of carbon capacity due to contamination. Typically, packed carbon particles have a density of 490 kg/m^3 (30 lb/ft^3); therefore, each cubic meter of bed volume will adsorb 24.5 kg of CFC-12 (1.5 lb. CFC-12/ft^3).

To provide the required capacity without excessive bed size, the system includes two carbon beds in parallel, one bed being on-line (adsorbing) with the remaining bed being regenerated. Beds of the size and type for this service require about one hour for steaming and one hour for cooling, therefore, each bed would be on-line adsorbing for two hours and off-line regenerating for two hours.

For air flows in the range of 0.91 Nm^3/s (1,900 scfm), carbon adsorption beds are usually loaded in large horizontal steel tanks, at a depth of about 0.6 to 1.8 meters (2 to 6 feet). To achieve 95 percent recovery in the bed, a reasonable maximum gas velocity is 0.38 meters/sec (75 fpm). Also, since the cost of operating the exhaust fans is dependent on the pressure drop across the beds, a more shallow bed is preferred. Therefore, a bed cross-section of 2.3 m^2 (25 ft^2) was selected for the example design. This results in a bed depth of about 0.6 meters, and the superficial gas velocity would be approximately 0.38 meters/sec (75 fpm).

Since the expected recovery rate is 0.29 kg/min (0.63 lb/min), each bed is sized to adsorb 17.4 kg (37.8 lbs) of CFC-12 during each two hour on-line period. This requires about 721 kg (1590 lbs) of carbon per bed, which would occupy a volume of 1.5 m^3 (53 ft^3). For two beds the total quantity of activated carbon purchased would be 1,442 kg (3,180 lbs). Table 5-4 summarizes the carbon adsorption system's design parameters.

TABLE 5-4. CARBON ADSORPTION SYSTEM DESIGN PARAMETERS

Total Gas Flowrate, m^3/min (cfm)	54.6 (1,900)
Gas Temperature, °C (°F)	21 (70)
CFC Loading inlet, kg/min (lb/min)	0.300 (0.661)
CFC Concentration, g/m^3 (ppmv)	5.49 (1070)
CFC Partial Pressure, Pa (psia)	0.77 (0.016)
Number of Beds	2
Superficial Velocity, m/sec (fpm)	0.38 (75)
Bed area, m^2 (ft^2)	2.32 (25)
Carbon depth, m (ft)	0.64 (2.1)
Carbon density g/cm^3 (lb/ft^3)	0.47 (30)
Carbon working capacity for CFC-12, kg CFC/kg carbon	0.05
Carbon bed CFC removal efficiency, %	95
Total carbon per bed, kg (lb)	721 (1,590)
Adsorption time per cycle, min	120
Regeneration time per cycle, min	60
Cool down per cycle, min	60
Steam requirement per regeneration, kg/kg carbon	0.3
Total stream use per cycle, kg (lbs)	216 (477)

Carbon Bed Regeneration—

To desorb the CFC-12, and regenerate the carbon beds, three options are available. One is to circulate a hot, inert gas through the bed to supply the heat of desorption. Second, the hot inert gas can be combined with a reduced pressure atmosphere in the absorber, created by a vacuum pump, to obtain higher recovery efficiencies. Finally, the procedure used more often and that selected for this example, is to flow superheated, low-pressure steam upward through the bed counter-current to the flow of CFC-laden exhaust gases during adsorption, to strip off the CFC-12. The CFC-12 rich steam is then routed to a water cooled heat exchanger to condense the steam.

The steam required to regenerate the beds was estimated to be 216 kg (477 lbs) per cycle, based on a typical factor of 0.3 kg steam per kg of carbon. Therefore, a steam supply of at least 250 kg/hr (550 lb/hr) is required.

Capital Costs—

Total capital cost estimates for the model plant retrofit carbon adsorption/recovery system for CFC-12 are presented in Table 5-5. These figures were developed by applying generally accepted installation and indirect cost factors to the total purchased equipment costs. The total capital investment for a two-bed carbon adsorption system is estimated to be $227,000. These costs are based on first-half 1985 dollars and are assumed accurate within +/- 30 percent. Indirect capital costs account for about 35 percent of these totals. The largest components of the purchased equipment costs are the carbon adsorber beds and associated process equipment, and the CFC-12 compression and purification system. This latter item may not be required for most plants. The capital costs for retrofit installations can be expected to vary significantly, due to different plant configurations.

Annualized Operating Costs and Cost Effectiveness—

Annualized costs for operating a CFC-12 system were developed for the model plant. These costs, and the bases used, are summarized in Table 5-6.

TABLE 5-5. ESTIMATED CAPITAL COSTS FOR EQUIPPING A PS-FOAM SHEET EXTRUSION PLANT WITH A CFC-12 CARBON ADSORPTION SYSTEM

	Cost ($1,000)
Direct Capital	
Adsorber (beds, condenser, fan, decanter, control system)	80
Compressor System	50
Ventilation System	10
TOTAL DIRECT CAPITAL	140
Indirect Capital (% of direct capital)	
Engineering and Supervision at 10%	14
Miscellaneous Field Construction Expenses at 5%	7
Contractor Fees at 10%	14
Contingencies at 20%	28
Startup Expenses at 2%	3
Interest During Construction at 10%	14
TOTAL INDIRECT CAPITAL	80
TOTAL DEPRECIABLE CAPITAL	220
Working Capital[a]	7
TOTAL CAPITAL INVESTMENT	227

[a]Estimated at 25 percent of the total direct operating and maintenance costs.

TABLE 5-6. ESTIMATED ANNUAL OPERATING AND MAINTENANCE COSTS FOR EQUIPPING A PS-FOAM SHEET EXTRUSION PLANT WITH A CFC-12 CARBON ADSORPTION SYSTEM

Direct Operating and Maintenance Costs	Cost ($1,000)
Operating Labor[a] at $13.00/hr	6
Maintenance[b]	4
Electricity	2
Steam	12
Process Water	2
Cooling Water	1
TOTAL DIRECT COSTS	27
Indirect Costs	
Capital Recovery Factor[c]	37
Overheads[d]	2
G&A[e]	4
Insurance and Property Taxes[f]	5
TOTAL INDIRECT COSTS	48
TOTAL OPERATING AND MAINTENANCE EXPENSES	75
CREDIT FOR RECOVERED CFC-12	(167)
OPERATING CREDIT	(93)

[a]Includes operating labor and supervision.
[b]Includes maintenance labor, materials, and supervision and is estimated at 3 percent of the direct capital costs.
[c]Estimated at 16.275 percent of the total capital investment.
[d]Estimated at 38 percent of labor expenses.
[e]Estimated at 50 percent of operating labor and 25 percent of the maintenance.
[f]Estimated at 2 percent of the total capital investment.

The various categories of direct and indirect operating expenses assoc-ated with the carbon adsorption/recovery system were estimated in terms of irst-half 1985 dollars. Maintenance and operating costs and steam consump-ion are the largest direct operating cost items, and these costs would in-rease with foam output. Capital recovery, calculated for 10-year service ife and 10 percent interest, is by far the largest single fixed cost item, ccounting for about 50 percent of the annualized operating costs.

Also to be considered in evaluations of net operating costs and cost ffectiveness is the credit for reclaimed blowing agent. The value of CFC-12 ecovered may vary depending upon its quality and the process requirements. nder the most ideal situations, assuming 100 percent use of recovered CFC-12, he model plant would save about $167,000 per year. If this material had to e shipped off site for disposal by incineration, the added cost could be as igh as $60,000 per year (based on $150 per barrel disposal cost).

The control cost effectiveness of a retrofitted capture and recovery ystem for CFC-12 can be expressed as the cost (or credit) per unit weight of FC-12 recovered, or alternatively, as the cost (or credit) per unit of CFC-12 mission averted. The cost effectiveness of a recovery system for a PS foam lant is not only a function of the efficiency of the control system itself, ut is dependent on the mass flow of CFC-12. For the model plant, the esti-ated cost per unit of CFC-12 emission averted is $724 per metric ton ($650 er ton) of CFC-12 controlled or $0.72/kg ($0.33/lb). If credit is given for he recovered CFC-12, the control cost actually becomes a credit of $912 per etric ton ($827/ton) of CFC-12 controlled. This is equivalent to a credit of 0.91/kg ($0.41/lb) of CFC-12 emissions averted. If off-site disposal of the aste CFC is required, the control cost will increase to $1,311 per metric ton $1,190 per ton).

Barriers to Implementation and Time Frame

Capture and recovery of blowing agent emissions from extruded polystyrene foam plants using carbon adsorption represents a technically viable option for substantially reducing CFC-12 emissions. The main barrier to implementation is the high capital expense associated with retrofit of suitable control systems to existing foam plants.

In terms of cost effectiveness to the foam producer, installation of carbon adsorption systems can currently be justified for perhaps a substantial number of foam plants. This is mainly because the credit for reclaimed CFC-12 is sufficient to yield a reasonable payout period for the initial system investment. For smaller plants, or those with somewhat lower annual production, the original investment may not be completely recoverable. Availability of capital presents a serious problem for many small and moderate size foam producing firms. The uncertainty of many foam producers concerning their future market position could preclude commitment of capital that may take years to recover.

An appropriate time frame for implementing this control technique would be highly dependent on the structure of economic incentives or reimbursements for plant retrofits. One way to affect this would be to cause the market price for CFC-12 to increase markedly, thus increasing the raw material credit for recovery, and penalizing firms for continued purchase of fresh material. Other alternatives include tax advantages or accelerated equipment depreciation schedules.

Presuming that economic barriers could be made less prohibitive, it should be possible to retrofit and bring control systems on-line for most PS-foam facilities within five to seven years. This includes some time for experimental evaluation of important design and environmental factors, as well as additional pilot scale and full scale demonstrations.

It is also possible that the realignment in the foam industry caused by ne high cost of controlling blowing agent emissions will stimulate research nvestment. Such efforts could result in the introduction of new foam prodcts and/or processes to the foam market.

NCINERATION OF PLANT EXHAUST

Destruction of chlorofluorocarbon emissions by thermal or catalytic inineration is a physically possible control option. However, several crucial roblems can be identified that limit its consideration as a technically ractical control method. Since CFC-12 is nonflammable, high incineration emperatures are necessary to cause thermal cracking. Also, a large volume of xhaust air must be treated to effectively control blowing agent emissions. his results in an excessively large fuel usage cost.

In general, nonflammable CFC compounds are not easily destroyed through onventional incineration techniques. Although CFC-12 decomposes above 540°C 1000°F), this is only true in a reducing atmosphere, such as a fuel-rich lame. The resulting gases contain hydrochloric (HCl) and hydrofluoric (HF) cids. These are secondary pollutants which are highly corrosive, and would ave to be scrubbed from the flame exhaust. Tests by DuPont indicated that uch fuel-rich flames can destroy over 99 percent of the chlorofluorocarbons resent in typical process streams (32).

Catalytic incineration mechanisms include disproportionation of CFC-12 in he presence of aluminum chloride ($AlCl_3$) to form carbon tetrachloride (CCl_4) nd carbon tetrafluoride (CF_4). This is a relatively exotic and expensive rocess. Under oxygen-free conditions, finely divided metallic iron at very igh temperatures will react with chlorofluorocarbons to form metal halides 32). Aside from the extremely high energy costs, this latter process would equire expensive treatment of the high-volume exhaust to remove oxygen.

It is possible to thermally crack CFC-12 at temperatures above 760°C (1400°F), but there are no published data which characterize the residual products of the cracking reactions. This process would require large kiln-like equipment to treat most or all of the exhaust stream. A proposed alternative to direct flame incineration would be the use of a heated sand bed or fluidized bed. No tests of such a process for CFC destruction have been reported.

Each of these proposed incineration destruction techniques involve very energy intensive processing of large volumes of exhaust air. While these methods may very effectively destroy CFC-12, the costs would be extremely prohibitive. Most or all of the input energy for thermal processes would be wasted, since the flexible foam production process could not utilize the waste heat. Because of the preponderance of negative factors, incineration techniques were not pursued further in this study.

SECTION 6

HYDROCARBONS AS POLYSTYRENE FOAM SHEET BLOWING AGENTS

One option that offers considerable promise in reducing CFC-12 emissions n the manufacture of polystyrene foam is substitution of the chlorofluoro- arbon with a non-ozone depleting blowing agent. Use of alternative blowing gents would eliminate, or significantly reduce the CFC emission associated ith a given PS foam operation. Currently, hydrocarbons such as n-pentane, sopentane, or n-butane are viable candidates for replacing CFC-12 in PS foam roduction. These options can eliminate the use of CFC-12 in this application hereby providing 100 percent reduction in emissions of this ozone depleting ompound.

Polystyrene foam is extruded into both board and sheet profiles. Because xtruded PS foam board is used as an insulation material, the use of hydrocar- ons as blowing agents would reduce the board's insulating effectiveness, and, herefore, would not be a desirable substitute. However, with PS foam sheet, ydrocarbons are excellent candidates for use as substitute blowing agents. hen PS foams were first introduced in the mid-1960s, they were blown almost xclusively with pentane. But by the late 1960s, the industry began a gradual onversion to CFC-12 as a blowing agent. This was due primarily to the fire azards associated with pentane. The trend towards using nonflammable CFC-12 s a PS foam blowing agent has continued to present, and now only the very arge, self insurable, companies such as Mobil, W.R. Grace, and Amoco are till using hydrocarbons. While these companies have historically been able o produce foamed polystyrene products safely and competitively, local ordi- ances regulating volatile organic compound (VOC) emissions have created ncentives for even these large companies to convert some of their facilities rom hydrocarbons to CFCs.

In spite of the trend away from using hydrocarbons, it is possible to make all thermoformable polystyrene foam sheet using a hydrocarbon such as pentane as a blowing agent. The following paragraphs discuss the various aspects of converting a medium sized polystyrene foam sheet manufacturing plant from CFC-12 to pentane.

PLANT EQUIPMENT AND OPERATION MODIFICATIONS

One of the primary concerns with using pentane as a blowing agent is its flammability. This concern is reflected in most of the changes which would have to be made to convert a plant using CFC blowing agents into one using pentane. Another important issue is any state, or local ordinances which regulate volatile organic compound (VOC) emissions. Presence of VOC regulations in a given area might require that a plant using pentane be equipped with an add-on control system which allows for recovery or destruction of the pentane. Concern over the uncertainty of future VOC regulation by states and localities probably contributes to companies' hesitation about seriously considering conversion to hydrocarbon blowing agents.

Some of the required facility modifications when converting from CFC-12 to pentane include: purchase and placement of the pentane tanks and their associated pumps, piping, and instrumentation; altering wiring to insure that electrical connections and devices would be explosion proof; purchase of non-electric foam transport vehicles; installation of static electric discharge devices in areas such as the film roll-up and unrolling stations; installing a ventilation system for reducing pentane concentrations; and installing a fire protection system (20,21). Since the CFC injection port on the extruder can also be used for pentane injection, no major changes to the extruder would be required (22).

In addition to modifications in the process and plant facilities, conversion to pentane might require changes in plant operation. One facility converted to pentane for a three year period in all of its PS foam sheet

ıanufacturing facilities. They found that the hazards of using pentane ·equired up to a 30 percent reduction in production operating speeds. (20). lowever, another source indicated that no change in operation rates would be ıecessary (22).

ɔNTROL EFFECTIVENESS

An advantage of pentane substitution in polystyrene foam sheet production .s that significant reductions in CFC emissions could be realized over the ıear-term. Because pentane has been used widely in PS foam sheet :anufacturing, the availability of this control technology is excellent. A ubstantial number of people in the PS foam sheet industry have experience in he use of pentane or other hydrocarbon blowing agents, and this reservoir of xpertise should ease the process of converting to hydrocarbons.

In terms of quantities of PS foam sheet produced, roughly 50 percent of olystyrene foam sheet is currently blown with hydrocarbons. However, only a ew of the largest companies produce this hydrocarbon-blown foam, and it is robable that the numerous medium and small sized companies use CFC-12. The rimary reason for this is that only the large companies can afford to provide heir own fire insurance as well as extensive fire protection equipment and ersonnel training.

There is considerable disagreement between CFC-12 users and hydrocarbon sers concerning the benefits of their particular blowing agent. Therefore, here is a degree of inertia among foamers to continue using the blowing agent hat they have been using. Companies using either blowing agent have made onflicting claims of higher production rates, lower scrap rates, and less xpensive product. The main objection to switching from CFC-12 to pentane is he cost of modifications required to provide the facility with fire protec- ion. This includes explosion-proofing all electrical equipment as well as nstalling a fire extinguishing system (20,22,23,24,25). Further study of the ost of fire protection in PS foam sheet plants is warranted.

COST OF CONTROL

To examine the cost of converting a facility from CFC-12 to pentane, two basic scenarios are examined: (1) substitution with no pentane recovery, and (2) substitution with a pentane carbon adsorption system. Table 6-1 shows the model plant characteristics and production parameters used to assess costs in this study. Briefly, the plant consists of two extruders and four thermoformers. Each extruder produces 340 Kg/hr (750 lbs/hr) of PS foam sheet, and the total production is 4100 metric tons per year (9.0 million lbs/yr).

The estimated cost for controlling CFC-12 emissions through substitution with pentane is strongly affected by the savings acquired through the use of a smaller quantity of a cheaper blowing agent. Savings occur because pentane costs roughly 77 percent less than CFC-12, and approximately 20 percent less blowing agent is required per pound of foam product.

Table 6-2 shows the estimated capital cost to convert the model 4,100 metric tons per year CFC-12 polystyrene foam sheet facility to a pentane using facility. The majority of the estimated $977,000 modifications are associated with fire and explosion protection devices. Table 6-3 presents the operating and maintenance costs for the same facility. The capital costs are annualized with a capital recovery factor. Assuming a credit for the blowing agent cost differential and the reduced scrap, the realized net annual operating and maintenance costs are $33,000.

These costs are adversely affected if regulations require the addition of a carbon adsorption system for pentane recovery. Table 6-4 details the capital cost of a carbon adsorption system designed for the model facility. This system is similar to the one described in Section 5 and would be used to capture pentane emissions from the extruder and from the regrinder and regrind storage. The estimated total annual cost for the carbon adsorption system is $86,000 (see Table 6-5) which is equivalent to a cost of approximately $0.64/kg ($0.29/lb) of CFC-12 emission averted. The annualized costs for the

TABLE 6-1. MODEL POLYSTYRENE EXTRUDED FOAM SHEET PLANT OPERATING PARAMETERS

Annual Production, mt (lbs.)	4,100	(9 million)
Production Rate, kg/hr (lb/hr)	680	(1500)
Number of Extruders	2 @ 340 kg/hr each	(2 @ 750 lb/hr) each
Foam Sheet Web Width, m (ft)	1.2	(4)
Extrudate Velocity, m/min (ft/min)	0.6	(2)
Typical Initial Foam Formulation	CFC-12 Blown	Pentane-Blown
Polystyrene	93% w	94% w
Blowing Agent	6% w	5% w
Additives	1% w	1% w
Number of Thermoformers	4	4
Percent Scrap in Feed	35	25

TABLE 6-2. ESTIMATED CAPITAL COSTS FOR EQUIPPING A PS-FOAM SHEET EXTRUSION PLANT WITH A PENTANE BLOWING AGENT SYSTEM (Cost in $1,000, mid-1985)

	Cost
Direct Capital	
Pentane Tank & Piping	42
Explosion Proof Wiring	195
3 Non-electric Foam Transport Vehicles	45
Ventilation System	471
Fire Protection System	210
TOTAL DEPRECIABLE CAPITAL[a]	963
Working Capital[b]	15
TOTAL CAPITAL INVESTMENT	978

[a] Installed cost which includes indirect costs of engineering, supervision, construction fees, interest during construction and contingencies.

[b] Estimated at 25 percent of the total direct operating and maintenance costs.

TABLE 6-3. ESTIMATED OPERATING AND MAINTENANCE COSTS FOR EQUIPPING A PS-FOAM SHEET EXTRUSION PLANT WITH A PENTANE BLOWING AGENT SYSTEM (Cost in $1,000, mid-1985)

	Cost
Added Direct Operating and Maintenance Costs	
Operating Labor[a] at $13.00/hr	30
Maintenance[b]	29
TOTAL DIRECT COSTS	59
Indirect Costs	
Capital Recovery Factor[c]	159
Overheads[d]	11
G&A[e]	22
Insurance and Property Taxes[f]	20
TOTAL INDIRECT COSTS	212
CREDITS	
Blowing Agent Differential	(162)
Scrap Reduction (28% of Total Direct and Indirect Costs)	(76)
TOTAL OPERATING AND MAINTENANCE EXPENSES WITH CREDITS	33

[a]Includes operating labor and supervision.
[b]Includes maintenance labor, materials, and supervision and is estimated at 3 percent of the direct capital costs.
[c]Estimated at 16.275 percent of the total capital investment.
[d]Estimated at 38 percent of labor expenses.
[e]Estimated at 50 percent of operating labor and 25 percent of the maintenance.
[f]Estimated at 2 percent of the total capital investment.

TABLE 6-4. ESTIMATED CAPITAL COSTS FOR A PS-FOAM SHEET EXTRUSION PLANT WITH A CARBON ADSORPTION SYSTEM FOR PENTANE RECOVERY (Cost in $1,000, mid-1985)

	Cost
Direct Capital	
Adsorbers	
Organics Purification	170
Ventilation System	—
TOTAL DIRECT CAPITAL	170
Indirect Capital (% of direct capital)	
Engineering and Supervision at 10%	17
Misc. Field Construction Expenses at 5%	9
Contractor Fees at 10%	17
Contingencies at 20%	34
Startup Expenses at 2%	3
Interest During Construction at 10%	17
TOTAL INDIRECT CAPITAL	97
TOTAL DEPRECIABLE CAPITAL	267
Working Capital[a]	8
TOTAL CAPITAL INVESTMENT	275

[a]Estimated at 25 percent of the total direct operating and maintenance costs.

TABLE 6-5. ESTIMATED OPERATING AND MAINTENANCE COSTS FOR EQUIPPING A PS-FOAM SHEET EXTRUSION PLANT WITH A PENTANE CARBON ADSORPTION SYSTEM (Cost in $1,000, mid-1985)

	Cost
Direct Operating and Maintenance Costs	
Operating Labor[a] at $13.00/hr.	6
Maintenance[b]	5
Electricity	12
Steam	4
Process water	2
Cooling water	1
TOTAL DIRECT COSTS	30
Indirect Costs	
Capital Recovery Factor[c]	45
Overheads[d]	2
G&A[e]	4
Insurance and Property Taxes[f]	5
TOTAL INDIRECT COSTS	56
TOTAL OPERATING AND MAINTENANCE EXPENSES	86

[a]Includes operating labor and supervision.
[b]Includes maintenance labor, materials, and supervision and is estimated at 3 percent of the direct capital costs.
[c]Estimated at 16.275 percent of the total capital investment.
[d]Estimated at 38 percent of labor expenses.
[e]Estimated at 50 percent of operating labor and 25 percent of the maintenance.
[f]Estimated at 2 percent of the total capital investment.

carbon adsorption system do not include a credit for the recovered pentane. The pentane could be reused as a blowing agent if the quality of the recovered product is adequate. If not, the pentane could be burned in an on-site boiler or be disposed off-site at an added cost. Another possibility not examined in this report, but warranting further study is incineration of the pentane contained in the plant exhaust.

HEALTH AND SAFETY FACTORS

Pentanes are only slightly toxic and are classified as simple asphyxiants and anesthetics. The TLV for the time-weighted average eight hour exposure to pentanes is 600 ppm or 1800 mg/m^3 (51 mg/SCF); the short-term (15 minute) exposure limit is 750 ppm or 2250 mg/m^3 (64 mg/SCF). The major safety risk of pentanes is their high flammability which is due in part to their volatility. Adequate ventilation and isolation from sources of heat and ignition are necessary to minimize the risk of fire and explosion.

n-Butane is a colorless, flammable, nontoxic gas. It is classified as a simple asphyxiant and an irritant. At high concentrations, it is an anesthetic, and will cause drowsiness in a short time in concentrations of one volume percent. Two hour exposures at concentrations of up to five volume percent cause no apparent injuries. The recommended TLV is 600 ppm. Like the pentanes, n-butane is extremely flammable and precautions should be taken to prevent fire and explosion. Table 6-6 provides the various health effect, chemical, and physical property data for CFC-12, n-pentane, isopentane, and n-butane.

CURRENT STATUS

Originally, all PS foams were blown exclusively with pentane. However, partly because of the fire hazards associated with pentane, a conversion to CFC-12 began in about 1967. The extent to which this conversion has progressed is subject to differing estimates. A 1980 Rand report indicates that

TABLE 6-6. PHYSICAL PROPERTIES OF CFC-12 AND HYDROCARBON BLOWING AGENTS

	CFC-12	n-Pentane	Isopentane	n-Butane
Formula	CCl_2F_2	C_5H_{12}	$C_2H_5CH(CH_3)_2$	C_4H_{10}
MW	120.91	72.15	72.17	58.12
Boiling Point (°C)	-29.8	36.1	27.8	-1
Fusion Point (°C)	-158	-130	-159.9	-138
Specific Gravity (g/cc)	1.311	0.626	0.6201	0.584
Vapor Density (air = 1)	4.2	2.48	2.6	2.0
Vapor Pressure (atm)	5@16°C	0.526@18.5°C	1@28°C	3.5@38°C
Ignition Temperature (°C)	NA	260	420	NA
Flashpoint (°C)	non-flammable	-40	-57	-73
Upper Explosion Limit, %	NA	7.8	8.3	8.5
Lower Explosion Limit, %	NA	1.5	1.4	1.9
Price (rail car quantities), $/lb	0.74	0.17	0.18	NA
OSHA PEL (ppm)	1000	1000	—	—
TLV (ppm)	1000	600	600	600

NA = Not available.

Source: (27,28,29,30,31)

by 1973, only 45 to 50 percent of the PS foams produced were blown with pentane. The same report shows that this market share dwindled further to 35 percent by 1977 (13). Recent communications with industry, however, have indicated that a very large share of the blowing agents used for PS foam sheet are hydrocarbons (18,23,26).

Because pentane is flammable and there are concerns with VOC emissions regulations, many polystyrene-foam extrusion plants have been converted from using hydrocarbon blowing agents to using CFC blowing agents. Contacts with industry have indicated that very few plants have been converted from CFC to pentane. However, several industry contacts indicated that the three major polystyrene foam extruders (Mobil, Amoco, and Grace) still use large quantities of the hydrocarbon blowing agents isopentane, butane, and n-pentane, respectively. These three companies alone are estimated to produce 70 to 90 percent of all polystyrene foam sheet (21,22,26). If this is so, then it is probable that a majority of the polystyrene-foam blowing agent market is still held by hydrocarbons. The fact that a large fraction of the PS foam produced is blown with hydrocarbons illustrates the viability of pentane blowing agents, flammability notwithstanding.

ECONOMIC FACTORS

There are many economic factors that can influence the selection of a particular PS foam blowing agent. While foam quality is of importance, evidence indicates that foams produced with hydrocarbons are sufficiently similar in quality to those foamed with CFC-12. The blowing agent of choice for small and medium producers is CFC-12 because of the fire hazards of hydrocarbons. These hazards not only drive up the cost of insuring the facility, they mandate the expensive plant retrofitting discussed earlier in this section.

Several important economic considerations regarding the control of CFC-12 emissions by hydrocarbons such as pentane can be identified. These include:

- net raw material cost savings,
- extrusion and thermoforming production rates,
- costs for additional plant ventilation,
- costs for carbon adsorption to control pentane emissions, and
- personnel requirements and additional training.

While all of these considerations are more or less interrelated with the specific characteristics of a given foam manufacturing plant, there are two additional considerations over which the foam manufacturer has no control. These are the cost of pentane and the special needs and requirements of the foam end-use markets. A dramatic rise in the cost of pentane relative to CFC-12 would decrease the economic incentive for a conversion. Also, a specific end user might specify CFC-12 as a blowing agent because of their particular needs. This would also be a disincentive for conversion to pentane.

Contact with industry has made it evident that both foam producers using CFC-12 and those using hydrocarbons feel that they cannot convert their facility and still manufacture foams economically. However, since foams are produced economically and competitively with both types of blowing agent it seems possible that a conversion could be made.

ARRIERS TO IMPLEMENTATION

From an overall perspective of the United States foam market, there ppear to be no extreme technical or economic barriers to near-term implementation of pentane substitution as a means of controlling CFC-12 emissions. An xception would be in localities where VOC regulations would prohibit or limit he use of hydrocarbons. Future voluntary substitution of pentane will robably not occur given current market conditions, because manufacturers may

not be willing to use flammable pentane blowing agents, and they may be skeptical about possible cost savings from switching to pentane. Also, there may be potential market decline because end-users may be unwilling to use pentane blown product.

SECTION 7

ALTERNATIVE CFC BLOWING AGENTS

The two characteristics of chlorofluorocarbons that can cause depletion f atmospheric ozone are their high stability and the presence of chlorine in he CFC molecule. Therefore, the ozone depletion potential of this particular lass of chemicals can be neutralized by making the CFC molecule marginally ess stable, so that it would not survive long enough to reach the upper tmosphere. Conversely, it should not be so unstable as to degrade in the ower atmosphere and contribute to smog. Hydrocarbon-containing CFC compounds ave been identified as having satisfactory intermediate stability because hey degrade to a large extent in the troposphere through reaction with ydroxyl radicals.

Alternatively, if chlorine could be reduced or omitted from the molecule he resulting species could not release the chlorine radicals that are hypothsized to react with the stratospheric ozone. Fluorocarbon compounds, which o not contain chlorine, may be suitable substitutes for blowing agents such s CFC-11 and CFC-12, since the chain reaction involved in the ozone depletion s more quickly terminated.

An ideal potential replacement for CFC blowing agents needs to have the ollowing characteristics:

- Product, safety, and toxicity performances competitive with that of commercial CFCs;
- Reduced or eliminated ozone depletion potential;
- Cost effectiveness with respect to its value and use; and

- Commercial manufacturing process which is available or can be developed.

Additionally, the CFC substitute should have the same physical foaming parameters as CFC-11 and CFC-12. These include boiling point, thermal conductivity, gas efficiency, diffusion rate from product, and solubility in formulation and product.

Polyurethane and polyisocyanurate insulation foams are generated through the action of a physical blowing agent (CFC-11). Some processes also use CFC-12 as a supplementary blowing agent, but its use is declining. Foaming occurs when the heat of the polymerization reaction vaporizes the CFC-11. The use of CFC blowing agents creates a closed cell structure. The closed cells give the foam a rigid, yet light-weight structure, and the CFCs trapped in the numerous tiny closed cells provide superior insulating properties.

Historically, much of the extruded polystyrene and other nonpolyurethane foam products have been blown with hydrocarbons such as n-pentane and isopentane, and to a lesser extent, butane. A variety of CFCs have been used either alone as the primary blowing agent, or in a mixture with other CFCs or pentanes. Besides n-pentane and isopentane, CFC-12 is the most commonly used blowing agent for the nonpolyurethane foams. Additionally, gases such as carbon dioxide are sometimes used in conjunction with hydrocarbons and CFCs. Smaller quantities of CFC-11, CFC-114, CFC-113, and CFC-115 are also used (5).

RIGID POLYURETHANE FOAM BLOWING AGENTS

For polyurethane foams, the most commonly used CFC blowing agent is CFC-11. It has a variety of chemical and physical properties which make it desirable as a blowing agent, and a potential substitute would need to have similar properties in order to serve suitably as a replacement. Since the purpose of seeking alternatives to CFC-11 is mainly to reduce the potential for harming the earth's ozone layer, the first criteria for judging the

uitability of an alternate is its ozone depletion factor. This factor ndicates the potential for ozone depletion relative to that of CFC-11 (with n ozone depletion factor of 1.0).

Since a majority of the blowing agent used in rigid polyurethane foam anufacture is trapped in cells and banked for extremely long periods of time, ubstitution with low ozone-depleting compounds is an action which would have ong-term effects on the fate of stratospheric ozone. However, before a ubstitute blowing agent can begin to reduce the potential threat to the ozone ayer, it must be widely accepted and adopted for use by the rigid olyurethane foam industry. This acceptance is dependent upon the alternate's osts and its performance during processing as well as in the final foam roduct.

rocessing Considerations

One of the primary characteristics of a physical blowing agent is its elative stability. For purposes of consistent product quality, it is essenial that the blowing agent does not react with any of the foam ingredients. t is equally important that the blowing agent does not decompose spontanously (44) and, in the case of insulating foams, the foam must retain its FC-11 to maintain the advantageous thermal properties for long periods of ime.

Thermal properties are also important during foam processing. A blowing gent with a low boiling point and a high latent heat of vaporization acts as heat sink and protects the foam from high temperatures which can be generted by the exothermic polymerization reaction. Some polyurethane foams can corch, melt, or burn if temperatures become too high. Unlike polyurethane oams, the chemical structure of polyisocyanurate foams makes them quite esistant to scorching and burning.

To be effective as a blowing agent, a compound must have an appropriate vapor pressure in the foam ingredient solution. The vapor pressure can be predicted from the boiling point and the solvent power of the candidate. If the boiling point is too high or the solvent power too strong, the blowing agent will tend to remain in the polymer, making the product soft or even soggy. Conversely, a very low boiling point will cause the blowing agent to vaporize before the foam polymer is rigid, which will result in collapsed cells. The blowing agent should not boil from solution below about 30°C (86°F) and must boil before reaching 60 to 80°C (140 to 176°F) (44).

The quantity of blowing agent required to make a given foam is primarily a function of the agent molecular weight and gas efficiency (44). For a blowing agent, the gas efficiency equals the contribution to cell volume divided by the ideal gas volume resulting from complete vaporization of the blowing agent. A good rigid foam blowing agent will have a gas efficiency greater than 90 percent.

For rigid polyurethane foams, a large majority of the blowing agent is incorporated into the foam. Additionally, the blowing agent trapped in the foam cells tends to escape very slowly (depending upon its diffusivity through the polymer) from the foam product. Therefore, in the manufacturing plant, the limited amounts of blowing agents which would be released during processing could be removed by proper ventilation. The only possible exception is in processing operations where large amounts of foam are cut or handled in such a way as to release significant amounts of the blowing agents. For this reason, the toxicity and flammability of a blowing agent are relatively minor concerns from the standpoint of the health and safety of the foam workers. However, since these foams are used as insulation materials in such applications as refrigerators and houses, toxicity and flammability are of concern. In the home environment, exposure levels are much lower than those in industrial settings because of the long-term chronic exposure which would occur in the household.

Product Considerations

A large majority of rigid polyurethane foams are used as insulation materials. Their effectiveness as insulation is dependent upon the insulating abilities of the gas in the foam cells, the polyurethane matrix which comprises the cell walls, and on the density of the foam. However, the polymer in the cell walls comprises only a small fraction of the foams total volume; therefore, the insulating properties of the cell gases are of critical importance. The insulating ability of a blowing agent is a function of both its thermal conductivity and its retention in the foam. To be effective as a rigid-polyurethane insulating-foam blowing agent, a compound must have both a low thermal conductivity and a low diffusivity. The influx of air into the foam cells is also an important factor in reducing the insulating properties, but it is independent of the nature of the blowing agent.

Loss of the foam's insulating ability may disrupt the building trade market, refrigeration appliance trade, and refrigerated transport. Some building codes rely on the existence of rigid polyurethane sheathing materials for standards related to insulation requirements. Some states, such as California, have promulgated laws requiring increased energy efficiency in home refrigeration appliances. Without the insulating capability possible with the present rigid polyurethane foams, walls of refrigerators may have to be thickened to accommodate more insulation material. Interior capacity would be reduced due to space restrictions on exterior dimensions. A similar scenario might result in the refrigerated transport industry, where reduced interior capacity would result in higher transport costs.

Implementation

Two final considerations are the implementation time frame and the blowing agent cost. These are probably the most difficult to predict because both are heavily dependent upon the manufacturer of the potential compound. However, the time frame for adaptation by the foam producers is more easily

predicted. In general, if a new blowing agent meets the processing and product standards of the foam manufacturing industry, it can be adopted with little delay; however, if it fails to meet these standards, it will be quickly rejected. Three alternative CFCs have been identified as potential replacements for the CFC-11 used in rigid polyurethane foams. These are CFC-123, CFC-133a, and CFC-141b.

CFC-123

CFC-123 (2,2-dichloro-1,1,1-trifluoroethane) is a promising candidate substitute for CFC-11 as a rigid polyurethane blowing agent. However, it is a newer chlorofluorocarbon which is not currently available in commercial quantities. This compound is expected to have a low ozone depletion factor. Some development work will probably be required by the polyol manufacturers to compensate for the increased solvent power of the alternative CFCs. There are already suitable polyols, at least on an experimental basis, so this should take little time. No change in the isocyanate is required.

The performance of CFC-123 during foam processing, is very similar to that of CFC-11. The boiling point of CFC-123 is 28°C (82°F), which is within the acceptable range for a rigid polyurethane foam blowing agent. Its solvent action on polyurethane, like that of CFC-11, is moderate. Its molecular weight is 152.9, and its gas efficiency is 95 percent of the theoretical value. The quantity of CFC-123 required to blow a 0.033 g/cc (2 lb/ft^3) poured foam is 27 parts per 100 parts polyol. Sprayed foams require up to 50 parts per 100 parts polyol. This is more than double the 22 parts per 100 parts polyol required of CFC-11.

Because its thermal conductivity is 20 percent higher than that of CFC-11, the insulating properties of polyurethane foams blown with CFC-123 would be somewhat less satisfactory. However, the diffusion rate for this CFC is slow; therefore, the foam's insulation properties should degrade no faster than those of CFC-11 blown foams. In tests for acute and short term toxicity,

DuPont has found CFC-123 to have a low toxicity. Further, this blowing agent is rated as nonflammable.

Some limited testing of CFC-123 as a blowing agent for rigid polyurethane foams has revealed both positive and negative results. As expected, CFC-123 exhibited good miscibility with polyols, while having an acceptable boiling point for foam production. However, the degree of flowability of the foam produced using CFC-123 was very poor. This may prohibit foams blown with CFC-123 from being considered alternatives for rigid foams which are poured or sprayed. It was also concluded during testing that foams produced with CFC-123 had an unacceptably high initial thermal conductivity. Clearly, more comprehensive testing of CFC-123 and mixtures including other CFCs will be necessary to establish the extent of potential application of CFC-123 as an alternative blowing agent.

CFC-141b

CFC-141b (1,1-dichloro-1-fluoroethane) is another potential replacement for CFC-11 as a rigid polyurethane foam blowing agent. A manufacturing process does exist for CFC-141b, though it is considered developmental (46). Its ozone depletion factor is expected to be low. However, this blowing agent has some drawbacks with respect to its processing and product performance. While its boiling point of 32°C (93°F) is within the desirable range, its solvent action is rated as high, so there is the possibility that CFC-141b might cause the foams to be soft. Its molecular weight is 117.0, and its gas efficiency is 95 percent of the theoretical value. The quantity of CFC-141b required to blow a 0.033 g/cc (2 lb/ft^3) foam is 20 parts per 100 parts polyol. This is about 2 parts/100 parts polyol less than is required of CFC-11.

The thermal conductivity of CFC-141b is 18 percent higher than that of CFC-11, so the foams produced with CFC-141b would have lower thermal efficiency. However, this blowing agent's low diffusivity through polyurethane is

similar to that of CFC-11; therefore, long term deterioration of insulating efficiency of CFC-141b blown foams should occur no faster than for foams blown with CFC-11.

The primary problem with CFC-141b is its uncertain toxicity and flammability. This CFC is considered to be a weak mutagen. As mentioned earlier, most of the blowing agent is trapped in the foam for an extended period of time; therefore, toxicity concerns would arise during mixing and handling of the blowing agent or during foam cutting operations where large quantities of foam cells are being ruptured. CFC-141b is flammable, however, the flame is weak and easily suppressed, so explosion is unlikely. The small flammability potential may not be a problem during manufacturing, but the flammability of the product itself is a concern to manufacturers. Rigid polyurethane and polyisocyanurate foams have been considered exceptional in their ability to retard flame. Use of a flammable blowing agent would defeat this advantage.

CFC-133a

The last, and probably least desirable of the three rigid polyurethane foam blowing agents under consideration in this report is CFC-133a (1-chloro-2,2,2-trifluoroethane). No commercial manufacturing process for this blowing agent is currently available in the U.S. although CFC-133a has been commercially produced as a chemical intermediate in the U.K. for several years (46). Its ozone depletion factor is expected to be low. However, this alternative also has limitations which adversely affect its suitability as a rigid polyurethane foam blowing agent.

The boiling point of CFC-133a is 6.1°C (43°F), and it has a strong solvent action on polyurethane. From a processing standpoint, these two factors could cause the foam product to be inferior or completely unsuitable. The low boiling point would tend to cause the blowing agent to foam prior to completion of polymerization which could result in a collapsed foam. The solvent action could cause the agent to remain within the polymer matrix,

thereby producing a softening effect. Further, CFC-133a has a gas efficiency of only 90 percent. This is five percent lower than that of CFC-11; however, the quantity of CFC-133a required to blow a 0.033 g/cc (2 lb/ft^3) foam is 21 parts per 100 parts polyol. This is about 1 part/100 parts polyol less than is required of CFC-11.

The thermal conductivity of CFC-133a is 22 percent higher than that of CFC-11, so the foams produced with CFC-133a would have lower thermal efficiency. However, this blowing agent's low diffusivity through polyurethane is similar to that of CFC-11; therefore, long term deterioration of insulating efficiency of CFC-133a blown foams should occur no faster than for foams blown with CFC-11. During limited testing of foams blown with CFC-133a, insulating ability was found to be satisfactory; however, it was slightly lower than that of CFC-11 blown foams. In contrast to CFC-123, the flow characteristics of foams blown with CFC-133a were acceptable.

The major drawback to use of CFC-133a as a rigid polyurethane foam blowing agent is its relatively high toxicity. This CFC is considered to be embryotoxic. Toxicity concerns would be greatest during mixing and handling of the blowing agent or during foam cutting operations where large quantities of foam cells are being ruptured. This blowing agent is considered to be nonflammable.

Conclusions for Rigid Polyurethane Foam Blowing Agents

To evaluate the suitability of a potential blowing agent for rigid polyurethane foams, a number of physical and chemical characteristics need to be considered. Table 7-1 summarizes the various characteristics of the CFCs which were considered as alternative blowing agents.

CFC-123 is probably a good alternative to CFC-11 as a rigid polyurethane blowing agent. The processing and product characteristics of this alternative closely resemble those of CFC-11, yet the ozone depletion factor of CFC-123 is

TABLE 7-1. EVALUATION FACTORS FOR SUBSTITUTE RIGID POLYURETHANE FOAM BLOWING AGENTS

Factors	CFC-11	Alternative CFC Blowing Agents		
		CFC-123	CFC-141b	CFC-133a
Reactivity with Ingredients	None	None	None	None
Stability	Stable	Stable	Stable	Stable
Boiling Point, °C (°F)	23.8 (74.8)	28 (82.4)	32 (89.6)	6.1 (43.0)
Solvent Power	Moderate	Moderate	Strong	Strong
Gas Efficiency (% of theory)	95	95	95	90
Molecular Weight	137.4	152.9	117.0	118.5
Quantity for 0.033 g/cc (2 lb/ft^3) Foam[c] (parts/100 parts polyol)	22	27	20	21
Thermal Conductivity W/m-°C (Btu/hr-ft-°F)	0.0078 (0.0045)	0.0093 (0.0054)	0.0092 (0.0053)	0.0095 (0.0055)
Diffusivity Through Polymer	Low	Low	Low	Low
Toxicity	Low	Low	Potentially[a] Mutagenic	Embryotoxic
Flammability[b]	Non-flammable	Non-flammable	Slightly flammable	Non-flammable
Ozone Depletion Factor	1.0	Low	Low	Low

[a]Note that only the Ames test results have reported this result. Further testing is required before conclusions can be drawn.

[b]These estimates are made qualitatively relative to CFC-11.

[c]Use of CFC blowing agent in sprayed applications can be nearly double these amounts due to higher foam manufacturing losses.

xpected to be much lower than that of CFC-11. One disadvantage of using FC-123 is that the foam has a slightly lower insulating ability. The other lternatives, CFC-141b and CFC-133a, may not be suitable blowing agents ecause of their toxicity and their strong solvent action. An additional rawback to CFC-133a is its low boiling point which could compromise foam uality. In general, the economic competitiveness of foams blown with more xpensive substitute CFCs would have to be examined relative to possible lternative insulation products such as fiberglass board or expandable polystyrene bead board.

Once a suitable alternative agent is available, development work will robably be required by the polyol manufacturers to compensate for the increased solvent power of the alternative CFCs. There are already suitable olyols, at least on an experimental basis, which can increase crosslinking ensity and offset some problems. No change in the isocyanate is required and o significant equipment changes are necessary. Bench-scale experimentation sing very modest amounts of blowing agent means that industry evaluations can e done on pilot plant quantities and need not await full commercial production. In rigid insulating foams, the manufacturer would need considerable ime to evaluate the aging properties of the product. A total of two years in ddition to blowing agent development are predicted for product development.

OLYSTYRENE FOAM BLOWING AGENTS

Extruded thermoplastic foams, such as polystyrene foams, use a variety of lowing agents including both hydrocarbons and chlorofluorocarbons. For olystyrene foamed sheet products, the most commonly used hydrocarbon blowing gent is pentane and the most commonly used chlorofluorocarbon is CFC-12. olystyrene boardstock products are blown almost exclusively with CFC-12. ince hydrocarbons, such as pentane, are not suspected to be depleters of tratospheric ozone, this section will focus on substitutes for CFC-12. A ariety of chemical and physical properties have made this compound desirable s a blowing agent for polystyrene foams, and a potential substitute

would need to have similar properties in order to serve suitably as a replacement. This is especially important for polystyrene boardstock products, which, like rigid polyurethane boardstock products, depend upon CFCs for superior insulating properties.

Unlike rigid polyurethane foams, most polystyrene foams do not retain their blowing agents for an extended period of time. Faster diffusion of CFC occurs primarily because the polystyrene foam products are thinner (e.g., sheet and film less than 2.5 cm (1 inch) thick). For the most part, any blowing agent incorporated into polystyrene foam sheet during manufacture will be emitted within a year. On the other hand, polystyrene boardstock, which may be as thick as 5.1 cm (2 inches) or more, will retain CFC-12 much longer. The half-life of CFC-12 in such products has been estimated to extend greater than 40 years.

Because of prompt emissions from the sheet products, use of low ozone depleting CFCs as blowing agent substitutes for CFC-12 can provide short term reductions in the potential threat to the stratospheric ozone layer. However, the substitute must be widely accepted and adopted for use by the polystyrene foam industry. This acceptance is dependent upon the alternate's cost, performance during processing, and ability to produce a quality final product.

Processing Considerations

The blowing agent for polystyrene foam should be chemically stable under the conditions present during polystyrene manufacturing. For purposes of consistent product quality, it is essential that the blowing agent does not react with any of the foam ingredients. It is equally important that the blowing agent is not easily thermally decomposed (44).

To be effective as a blowing agent, a compound must have an appropriate vapor pressure in the molten resin at the point of extrusion. In most cases, this vapor pressure should be at least 670 psia. This limits blowing agents

or most resins to those with boiling points between -40°C to +50°C (-40°F to 122°F). If the boiling point is too low, the blowing agent would not be an asily compressed vapor; therefore, it would be difficult to meter into the xtruder. Conversely, if the boiling point is too high, the vapor bubbles ill expand too slowly or not at all.

Because polystyrene sheet thermoforming operations require the presence f a blowing agent in the foam, the permeability of the blowing agent through he polymer is an important factor. Permeability is a function of the blowing gent's diffusivity through the polymer, its solubility in the polymer, aging haracteristics, and rate of air infusion. If either the diffusivity or the olubility is too high, thermoforming will be difficult, because there will ot be enough blowing agent retained in the foam cells. High solubility nd/or diffusivity would also make potential substitutes unsuitable for anufacture of polystyrene insulating boardstock. If the CFC escapes through he foam cells, the valuable insulating properties would be lost. In fact, ecause most of the blowing agent should be retained in the foam for the ntire life of the project (i.e., 50 years or more), diffusion rates should be ery small to ensure long-term product performance.

The quantity of blowing agent required to make a given foam is a function f the agent's molecular weight and gas efficiency (44). For a blowing agent, he gas efficiency equals the contribution to cell volume divided by the ideal as volume. A good blowing agent for polystyrene foam will have a gas effiiency greater than 90 percent.

Because a majority of the blowing agent is emitted in foam extrusion and heet thermoforming plants, the primary fire hazards associated with the use f a flammable (i.e., hydrocarbon) blowing agent are encountered in the sheet anufacturing facilities. In fact, the flammability of the foam product is ore a function of the flammability of the polymer than that of the blowing gent trapped in the foam cells (45). Although it is certainly preferable hat a blowing agent be nonflammable, it is possible to safely manufacture

foams with a flammable blowing agent given proper equipment and sufficiently trained personnel. This is supported by the fact that some major producers of thermoformable polystyrene foam sheet use hydrocarbons as their primary blowing agents. Hydrocarbons are many times more flammable than the alternative CFCs discussed in this section.

Product Considerations

Most polystyrene foam sheet is used for packaging or serving food products. Meat trays, egg cartons, hamburger shells, and disposable plates are examples of this application. Because some blowing agent is retained in the final foam product and these products come in intimate contact with foodstuffs, the FDA must approve any new chemical which would be used as a blowing agent. Prior to such approval, a candidate substitute blowing agent would have to undergo extensive toxicity testing, and even a slight degree of toxicity would probably jeopardize the acceptance of a potential alternative CFC (45).

Polystyrene foam boardstock is used primarily as an insulating material for residential and commercial structures. In these applications, polystyrene boardstock has the advantage of high insulating quality (per thickness) due to the CFC vapor trapped in the cells. Of course, an alternative blowing agent with lower insulating capability (i.e., higher thermal conductivity) could be used, but the material's competitive advantage would be lessened in the building materials market. Thus, an optimum substitute would possess insulating qualities similar to or better than those of CFC-12.

Implementation

Two final considerations are the implementation time frame and the blowing agent cost. These are probably the most difficult to predict because both are heavily dependant upon regulatory considerations and the chemical manufactures' willingness to produce new blowing agents. However, the time frame for

adaptation by the foam producers is more easily predicted. Because full-scale experimentation is costly and requires full-scale production equipment and large quantities of raw materials, the evaluation by industry of alternative polystyrene blowing agents will be dependent on the availability of the alternative agent. Four alternative CFCs have been identified as potential replacements for the CFC-12 used in polystyrene foams. These are CFC-22, CFC-124, FC-134a, and CFC-142b.

CFC-22

A currently available chemical which might successfully be used as a polystyrene foam blowing agent is CFC-22. Its boiling point is -40.8°C (-41.4°F), which is quite low, but may be acceptable. Substances with boiling points much lower than -40°C (-40°F) may be difficult to meter into the extruder, because they are difficult to compress to a liquid state. Test results reporting the amount of CFC-22 required to blow polystyrene foam, and the gas efficiency were not found. It does, however, have a low ozone depletion factor.

The solvent power of CFC-22 is quite low, but its diffusivity through polymer materials is high. This coupled with the fact that its thermal conductivity is 9 percent higher than CFC-12 make CFC-22 a poor choice as a blowing agent for polystyrene boardstock insulating foam. The high diffusivity of CFC-22 may make thermoforming difficult also. It does have the advantage of being a safe chemical; both non-toxic and non-flammable.

CFC-124

The chemical and physical properties of CFC-124 (2-chloro-1,1,1,2-tetrafluoroethane) indicate that it might be a suitable replacement for CFC-12 as a polystyrene foam blowing agent. However, it is a new chlorofluorocarbon for which a manufacturing process has not yet been developed. This compound is expected to have a low ozone depletion factor. The boiling point of this

CFC is -11°C (12.2°F) which is within the acceptable range for a polystyrene blowing agent. Its solvent power and diffusivity are both low, so there should be retention of the agent in the foam cells. The molecular weight of this CFC is 136.5, and its gas efficiency is 90 percent of the theoretical value. The quantity of CFC-124 required to blow a 5 lb/ft^3 foam is 6 parts per 100 parts resin. This is about 20 percent more CFC required by weight than is required with a CFC-12 formulation.

Because the thermal conductivity of CFC-124 is six percent higher than that of CFC-12, the insulating properties of polystyrene foams blown with CFC-124 will be less satisfactory. This may not be a factor for most polystyrene sheet foam because insulation is not critical; however, this may make it less attractive as a boardstock blowing agent. Additionally, the diffusion rate for this CFC is slow; therefore, the foam's insulation properties should degrade no faster than those of CFC-12 blown foams. In tests for acute and short term toxicity, DuPont has found CFC-124 to have a low toxicity. Further, this blowing agent is rated as nonflammable.

FC134a

FC-134a (1,1,1,2-tetrafluoroethane) is another chemical with properties which appear to make it a potentially viable candidate for replacing CFC-12 as a polystyrene foam blowing agent. Because this compound contains no chlorine, its estimated ozone depletion factor is zero. Its boiling point is within the required range at -26.3°C (-15.3°F), and its solvent power and diffusivity are both acceptably low. The molecular weight of FC-134a is 102.0, and its gas efficiency is 95 percent of the theoretical value. The quantity of FC-134a required to blow a 0.08 g/cc (5 lb/ft^3) foam is 4.2 parts per 100 parts resin. This is about 0.8 parts per 100 parts resin less than is required of CFC-12.

The thermal conductivity of this compound is 14 percent lower than that of CFC-12, so foams blown with FC-134a would have superior insulating characteristics to those blown with CFC-12. Additionally, the diffusion rate for

this FC is slow through polystyrene; therefore, the foam's insulation properties should degrade no faster than those of CFC-12 blown foams (2). These two characteristics make it especially suited to replace CFC-12 as a blowing agent for polystyrene foam boardstock. Toxicity testing for this compound is incomplete, but in tests for flammability, this blowing agent has been rated as nonflammable.

CFC-142b Alone or Mixture with CFC-22

Other proposed substitutes include use of CFC-142b, either alone or in a mixture with CFC-22. CFC-142b is currently manufactured and sold in a 60/40 mixture with CFC-22 as an aerosol propellant. Less is sold as pure CFC-142b because of its flammability. Technical feasibility as a blowing agent is not completely known, however, some formulations may be cost-effective alternatives to CFC-12. Concerns include strong solvent action and rapid diffusion of CFC-22. For CFC-142b, the ozone depletion factor is expected to be low. Its boiling point is -9.2°C (15.4°F), but is has a moderate solvent power and diffusivity which might compromise the foam's thermoformability. The molecular weight of this CFC is 100.5, and its gas efficiency is 80 percent of the theoretical value. The quantity of CFC-142b required to blow a 0.08 g/cc (5 lb/ft^3) foam is 5 parts per 100 parts resin. This is equivalent to the quantity of CFC-12 which would be required.

The thermal conductivity of CFC-142b is 15 percent higher than that of CFC-12, so the insulating characteristics of foams blown with CFC-142b would be inferior to those of foams blown with CFC-12. Additionally, the diffusion rate for this CFC is moderate; therefore, the foam's insulation properties would probably degrade faster than those of CFC-12 blown foams. In tests for acute and short term toxicity, DuPont has found CFC-142b to be a weak mutagen. Further, this blowing agent is rated as slightly flammable. Its flammability limits in air range from 6.9 weight percent to 15.5 weight percent.

Though both CFC-22 and CFC-142b appear to have properties which are less than satisfactory for blowing polystyrene foam, together in a mixture the properties of one chemical may compensate for those of the other. For instance, CFC-142b is flammable, but adding a sufficient quantity of CFC-22 forms a non-flammable mixture. Also, CFC-142b is less diffusive through polymer than CFC-22 and may alleviate problems with thermoforming. Both have relatively high thermal conductivity; therefore, a mixture of CFC-142b and CFC-22 would still be a less desirable choice as a blowing agent for polystyrene foam boardstock used as insulation.

Innovative Blowing Agent Blends

Most of the alternative blowing agent chemicals discussed so far have drawbacks associated with them: alternative CFCs are relatively expensive and could adversely affect foam quality, and hydrocarbons can increase fire hazards in the manufacturing plant. A promising approach to reducing these drawbacks is the use of a blend of a less ozone-depleting CFC with a hydrocarbon. The benefit of this blend would be that the hydrocarbon could possibly prevent the CFC from adversely affecting the foam quality, and the CFC could reduce the emitted concentrations, hence the fire hazards of the hydrocarbon. The optimum chemicals and relative concentrations would have to be established through research and testing. Operating costs for this option are apparently minimal, however, FDA approval will be needed for food packaging.

Conclusions for Polystyrene Foam Blowing Agents

To evaluate the suitability of a potential blowing agent for polystyrene foams, a number of physical and chemical characteristics need to be considered. Table 7-2 summarizes the various characteristics of the CFCs which were considered as alternative blowing agents.

TABLE 7-2. EVALUATION FACTORS FOR SUBSTITUTE POLYSTYRENE FOAM BLOWING AGENTS

Factors	CFC-12	Alternative CFC Blowing Agents			
		CFC-22	CFC-124	FC-134a	CFC-142b
Reactivity with Ingredients	None	None	None	None	None
Stability	Stable	Stable	Stable	Stable	Stable
Boiling Point, °C (°F)	-29.8 (-21.6)	-40.8 (-41.4)	-11 (12.2)	-26.3 (-15.3)	-9.2 (15.4)
Solvent Power	Low	Low	Low	Low	Moderate
Gas Efficiency (% of theory)	--	--	90	95	80
Molecular Weight	120.9	86.5	136.5	102.0	100.5
Quantity for 0.08 g/cm^3 (5 lb/ft^3) Foam (parts/100 parts resin)	5	--	6	4.2	5
Thermal Conductivity W/m-°C (Btu/hr-ft-°F)	0.0097 (0.0056)	0.0105 (0.0061)	0.0102 (0.0059)	0.0083 (0.0048)	0.0111 (0.0064)
Diffusivity Through Polymer	Low	High	Low	Low	Moderate
Toxicity	Low	Low	Low	Incomplete	Low
Flammability[a]	Non-flammable	Non-flammable	Non-flammable	Non-flammable	Slightly flammable
Ozone Depletion Factor	0.86	0.05	Low	0.0	Low

[a]These estimates are made qualitatively relative to CFC-12.

Both CFC-124 and FC-134a appear to be viable as candidates for replacing CFC-12 as a polystyrene foam blowing agent. With respect to the desired chemical and physical properties, FC-134a is equivalent or superior to CFC-124. However, cost comparisons are not yet possible, and toxicity testing is incomplete for FC-134a. Even a slight toxicity could jeopardize its potential as a blowing agent.

Both CFC-22 and CFC-142b considered alone as blowing agents for polystyrene foam appear to be less promising. The low boiling point and high diffusivity of CFC-22 may cause problems in both the manufacturing process and produce a product of inferior quality. CFC-142b has a high thermal conductivity, making it a poor choice for blowing insulating foams, but its main drawback is its slight flammability. Both chemicals are currently available and are sold together as a mixture. There is potential that a non-flammable mixture of these chemicals may be suitable for use as a polystyrene foam sheet blowing agent.

Finally, a mixture of CFC-22 and hydrocarbons appears to be an additional blowing agent alternative. The benefit of this blend would be that the hydrocarbon could possibly prevent the CFC foam adversely affecting the foam quality, and the CFC could reduce the emitted concentrations, hence the fire hazards of hydrocarbons.

POLYOLEFIN AND PHENOLIC FOAM BLOWING AGENTS

Extruded thermoplastic foams such as polyolefin foams, (i.e., polyethylene, polypropylene, etc.) use a variety of chlorofluorocarbon blowing agents including CFC-11, CFC-12, CFC-114, and CFC-115. The polyolefin foam industry also employs mixtures of these CFCs as blowing agents. The most common blowing agent is a mixture of CFC-12/114. A variety of chemical and physical properties makes these compounds desirable as blowing agents for polyolefin foams. For instance, since the diffusion rate of CFC-114 out of these foams is close to the diffusion rate of air in, the foams maintain

structural stability. A potential substitute would need to have similar diffusion properties in order to serve suitably as a replacement.

Like polystyrene foams, polyolefin foam sheet products tend to emit most of their blowing agents during, or soon after, manufacture. The boardstock products tend to retain blowing agents. Use of low ozone depleting CFCs as blowing agent substitutes in polyolefin foam sheet products can provide short term reductions in the potential threat to the stratospheric ozone layer. However, before a substitute blowing agent can begin to reduce the potential threat to the ozone layer, it must be widely accepted and adopted for use by the polyolefin foam industry. This acceptance is dependent upon the alternate's cost and its performance during processing as well as in the final foam product.

Phenolic foams are blown using CFC-11 and CFC-113. A variety of chemical and physical properties make these CFCs desirable as a blowing agent for phenolic foam, and a potential substitute would have to have similar properties since phenolic foam depends upon CFCs for superior insulating properties. Like polyurethane and polystyrene boardstock, phenolic foams retain the CFC for a long period of time.

Processing Considerations

Polyolefin foams are typically used in cushioning and wrapping applications. For these foams, the criteria for judging potential substitute blowing agents are similar to those described for polystyrene foam except that solvent effects are much less important and diffusion losses can be much more significant. Aging or diffusion additives are generally used to adjust CFC emission rate to the air infiltration rate. Even with CFC-12 substantial losses result in a partially collapsed foam which must be stored until it reexpands. Because the CFC emission rates from thin polyolefin foam sheet are high, blowing agent flammability is a greater concern than it is with polystyrene

foams. Likewise toxicity is a concern because of the potential for worker exposure.

Polyolefin foams include several types of polymers and therefore different blowing agents may be best suitable for certain polyolefin foam types. Also, the final product may dictate the choice of blowing agent (e.g., CFC-114 is required for thick polyolefin profiles).

For phenolic foams, processing considerations are similar to those of polyurethane and polystyrene insulating foams.

Product Considerations

Because a large majority of polyolefin foams are thin sheet products, the blowing agent is emitted early in the foam's life, and makes no significant contribution to the properties of the foam product.

Phenolic foam, on the other hand, is used as an insulating material. In this application, phenolic foam has the advantage of high insulating quality (per thickness) due to the CFC vapor trapped in the cells. Thus, an optimum substitute would possess insulating qualities similar to or better than those presently achieved with CFC-11 and CFC-113.

Implementation

Two final considerations are the implementation time frame and the blowing agent cost. These are probably the most difficult to predict because both are heavily dependent upon the manufacturer of the potential alternative. However, the time frame for adaptation by the foam producers is more easily predicted. Because experimentation requires full-scale production equipment and large quantities of raw materials, the evaluation by industry of alternative polyolefin blowing agents will be dependent on the availability of alternate CFCs. CFC-124 and CFC-142b have been identified as potential new

CFC replacements for the CFCs currently used in polyolefin foams. CFC-123 and CFC-141b have been identified as potential replacements for the CFCs currently used in phenolic foams.

CFC-124

CFC-124 is a potentially suitable replacement for CFC-12 as a polyolefin foam blowing agent. However, it is a new chlorofluorocarbon for which a manufacturing process has not yet been developed. This compound is expected to have a low ozone depletion factor. The boiling point of this CFC is -11°C (12.2°F) which is within the acceptable range for a polyolefin blowing agent. Its diffusivity through these foams is high, so there could be problems with collapsed foams.

The molecular weight of this CFC is 136.5, and its gas efficiency is 65 percent of the theoretical value. The quantity of CFC-124 required to blow a 0.018 g/cc (1.1 lb/ft^3) foam sheet, 0.08 cm (1/32 in.) thickness, is 40 parts per 100 parts resin. This is about five parts per 100 parts resin less than is required of CFC-12. In tests for acute and short term toxicity, DuPont has found CFC-124 to have a low toxicity. Further, this blowing agent is rated as nonflammable.

CFC-142b

The discussion of the properties of CFC-142b provided relative to polystyrene foams is applicable also to polyolefin foams with the following exceptions. Since polyolefin foams are typically not used as insulating materials, the high thermal conductivity is not an issue. As previously mentioned, the diffusivity of the CFC will be higher than the polyolefin material, which could potentially cause processing problems, (i.e., sagging). Again, the slight flammability of the chemical must be considered with respect to the particular polyolefin foam manufacturing process and product being

made. Since the CFC is not retained in thin polyolefin sheet products, this is more of a processing (worker safety) concern.

CFC-123

CFC-123 may prove to be a good blowing agent for phenolic foam although it has a higher thermal conductivity (less insulating value) and is expected to cost more than CFC-11 (44). However, the diffusion rate for this CFC is slow; therefore, the foam's insulation properties should degrade no faster than those of CFC-11 blown foams. Chemical manufacturers and rigid insulation foam manufacturers have both recently renewed efforts to study application of this compound.

CFC-141b

Like CFC-123, CFC-141b may prove to be a good blowing agent, but it has the disadvantages of higher thermal conductivity, increased toxicity, and slight flammability (44).

Conclusions for Polyolefin and Phenolic Foam Blowing Agents

CFC-124 appears to be a suitable substitute blowing agent for polyolefin foams due to the favorable chemical and physical characteristics. CFC-142b may also be an acceptable blowing agent substitute if its diffusive nature is not extreme enough to cause sagging of the product. Also, the issue of its flammability must be addressed with respect to the particular polyolefin process in which it is to be used. Table 7-3 summarizes the various characteristics of the CFCs which were considered as alternative blowing agents.

Based on similar substitutes proposed for other rigid foams blown with CFC-11, potential CFC substitutes are CFC-123 and CFC-141b. Table 7-4 summarizes the various characteristics of the CFCs which were considered as alternative blowing agents. One disadvantage of using CFC-123 is that the

foam has a lower insulating ability. In addition, CFC-141b may not be suitable because of its toxicity. In general, the economic competitiveness of foams blown with more expensive CFCs would have to be examined relative to possible alternative insulation products.

TABLE 7-3. EVALUATION FACTORS FOR SUBSTITUTE POLYOLEFIN FOAM BLOWING AGENTS

Factors	Current CFC Blowing Agents				Alternative CFC Blowing Agents	
	CFC-11	CFC-12	CFC-114	CFC-115	CFC-124	CFC-142b
Reactivity with Ingredients	None	None	None	None	None	None
Stability	Stable	Stable	Stable	Stable	Stable	Stable
Boiling Point, °C (°F)	23.8 (74.8)	-29.8 (-21.6)	3.8 (38.8)	-38.7 (-37.7)	-12 (10.4)	-9.2 (15.4)
Gas Efficiency (% of theory)	--	51	84	85	65	80
Molecular Weight	137.4	120.9	170.9	154.5	136.5	100.5
Quantity for 0.018 g/cm^3 (1.1 lb/ft^3) Foam (parts/ 100 parts resin)	--	45	39	--	40	--
Diffusivity Through Polymer	--	High	Low	Low	High	High
Toxicity	Low	Low	Low	Low	Low	Low
Flammability[a]	Non-flammable	Non-flammable	Non-flammable	Non-flammable	Non-flammable	Slightly flammable

[a]These estimates are made qualitatively relative to CFC-11 and CFC-12.

TABLE 7-4. EVALUATION FACTORS FOR SUBSTITUTE RIGID PHENOLIC FOAM BLOWING AGENTS

Factors	CFC-11	CFC-113	Alternative CFC Blowing Agents	
			CFC-123	CFC-141b
Reactivity with Ingredients	None	None	None	None
Stability	Stable	Stable	Stable	Stable
Boiling Point, °C (°F)	23.8 (74.8)	47.6 (117.7)	28 (82.4)	32 (89.6)
Solvent Power	Moderate		Moderate	Strong
Molecular Weight	137.4	187.4	152.9	117.0
Thermal Conductivity W/m-°C (Btu/hr-ft-°F)	0.0078 (0.0045)	0.0076 (0.0044)	0.0093 (0.0054)	0.0092 (0.0053)
Diffusivity Through Polymer	Low	Low	Low	Low
Toxicity[a]	Low	Low	Low	Potentially Mutagenic[a]
Flammability[b]	Non-flammable	Non flammable	Non-flammable	Slightly flammable
Ozone Depletion Factor	1.0	Low	Low	Low
Cost ($/kg)	1.40	2.06	4.14	3.31

Source: (44)

[a]Note that only the Ames test results have reported this result. Further testing is required before conclusions can be drawn.

[b]These estimates are made qualitatively relative to CFC-11.

SECTION 8

SUBSTITUTES FOR CURRENT RIGID FOAM PRODUCTS

ALTERNATIVES TO CFC BLOWN RIGID POLYURETHANE FOAM PRODUCTS

A majority of rigid polyurethane foam products are used as insulation in various applications. These include: industrial, commercial, and residential building insulation; refrigerated appliance insulation; industrial insulation; and insulation for refrigerated transport vehicles. Packaging is an additional use of rigid polyurethane foams. In each application area, there are alternative materials which can serve as substitutes for urethanes. However, the unique properties of rigid polyurethane foams often make them more desirable and less expensive than potential substitutes. This is especially so with insulation foams where any alternative material would cause substantial increases in energy costs or construction costs.

Low thermal conductivity and good mechanical properties are the primary advantages that rigid polyurethane foam has over other insulation materials. Polyisocyanurate foams have the added benefit of excellent fire resistance. Other advantages include:

- Ease of production and simplified designs,
- Low density,
- Less required thickness,
- Reduced waste materials, and
- Resistance to moisture.

The most common use of polyurethane board is commercial and industrial roofing, but these foams are also used extensively in residential sheathing and roofing. Table 8-1 shows the market distribution for PU foam insulation. Roofing and sheathing as well as some industrial pipe and storage tank insulation applications offer the best possibilities for substitution of either alternative materials or insulation systems. Alternatives include materials made with little or no CFCs. Table 8-2 lists specific alternatives to polyurethane foam products in several application areas and the CFC emission reduction potential. The following sections discuss the applicability of various substitutes for rigid polyurethane foam products.

Alternative Industrial and Commercial Roofing Insulations

A large majority of the PU insulation produced is used in industrial and commercial roofing. Before the mid-1970s, however, this was not the case. Then, most roofs consisted of hot-mopped asphalt or coal-tar pitch, and often no insulation was used. When insulation was desired, the available materials were primarily fiberboard, perlite, fiberglass, and cellular glass. Increasing energy costs and advances in technology have stimulated development of improved roofing methods, and there is currently available a tremendous variety of membrane materials, insulation products, and applications techniques. Rigid PU foams are used mainly in three general types of industrial and commercial roofing: built-up roof (BUR), modified bitumen and elastomeric systems. Table 8-3 shows the use distribution of insulation products in the roofing industry.

Traditionally, built-up roofing membrane has been used to protect the flat and nearly-flat roofs found in industrial and commercial construction. BUR uses layers of felts (paper, glass fiber, polyester, or asbestos) alternated with layers of hot-applied or cold-applied bituminous materials (asphalt or coal-tar based). The surface layer is also embedded in a heavy coat of asphalt or coal-tar pitch. This top layer is usually covered with gravel, but may be left smooth. Typical BUR systems are installed in different ways

TABLE 8-1. 1985 MARKET DISTRIBUTION FOR POLYURETHANE AND POLYISOCYANURATE INSULATION FOAMS

Market	Market Distribution (Percent)
Industrial and Commercial Roofing	65
New Residential	22
Retrofit Residential	3
Masonry Wall	3
Metal Buildings	3
Farm Buildings	3
Non-Residential Retrofit	1
Miscellaneous	<1
	100

Source: (48)

TABLE 8-2. POTENTIAL SUBSTITUTES FOR RIGID PU FOAM PRODUCTS

Applications	Alternatives	CFC Emission Reduction Potential
Industrial Roof/Ceiling:	Fiberglass	100%
	Perlite	100%
	Expanded PS	100%
	Extruded PS	40%
	Fiberboard	100%
	Cellular Glass	100%
	Insulating Concrete	100%
Industrial Walls:	Fiberglass	100%
	Rock Wool	100%
	Perlite	100%
	Vermiculite	100%
	Insulating Concrete	100%
Commercial Roof/Ceiling:	Fiberglass	100%
	Rock Wool	100%
	Cellulose	100%
	Perlite	100%
	Expanded PS	100%
	Extruded PS	40%
	Fiberboard	100%
	Cellular Glass	100%
	Insulating Concrete	100%
Commercial Walls:	Fiberglass	100%
	Rock Wool	100%
	Perlite	100%
	Vermiculite	100%
	Expanded PS	100%
	Extruded PS	40%
	Fiberboard	100%
	Cellular Glass	100%

(Continued)

TABLE 8-2 (Continued)

Applications	Alternatives	CFC Emission Reduction Potential
Commercial Floors:	Fiberglass	100%
	Rock Wool	100%
	Expanded PS	100%
	Extruded PS	40%
Residential Roof/Ceiling:	Fiberglass	100%
	Rock Wool	100%
	Cellulose	100%
Residential Walls:	Fiberglass	100%
	Rock Wool	100%
	Expanded PS	100%
	Extruded PS	40%
	Fiberboard	100%
	Cellular Glass	100%
	Gypsum	100%
	Plywood	100%
	Foil Faced Laminated Board	100%
Residential Floors:	Fiberglass	100%
	Rock Wool	100%
	Foil Faced Laminated Board	100%
Refrigeration Insulation:	Expandable PS Bead	100%
	Extruded PS Board	40%
	Fiberglass	100%
Packaging Materials:	EPS Foam Peanuts or Blocks	100%
	Plastic Film Bubble Wrap	100%
	Polyolefin Foam Sheet or Blocks	100%
	Wood Shavings	100%

TABLE 8-3. NON-RESIDENTIAL ROOFING INSULATION MARKET (1986 TOTAL = 3900 MILLION BOARD FEET)

Material	Total Market Share (%)	Built-up Roofing (%)	Modified Bitumen (%)	Single-Ply Sheets (%)
Polyisocyanurate	32	33	33	31
Perlite	13	19	19	6
Expanded PS	12	—	—	26
Extruded PS	10	9	9	11
Fiberglass	10	15	14	4
Fiberboard	9	8	9	9
Composite	8	11	10	5
Polyurethane	4	3	3	5
Phenolic	2	<1	<1	3
Other	<1	1	<1	<1
Total	100	100	100	100

Source: (48)

consisting of: membrane adhered to deck without insulation; insulation adhered to deck with membrane applied to insulation; base sheet adhered to deck, insulation over base sheet, and top membrane over insulation; and membrane adhered to deck with insulation applied over the membrane.

Modified bitumen systems are similar to BUR systems except that the individual plies are factory laminated and the modified bitumen is applied in one layer. The composite modified bitumen sheets can be either self-adhesive or heat applied.

The third major roofing method is known as elastomeric roofing. This technology uses a single ply of thermoplastic or thermosetting synthetic membrane. There are four major methods by which elastomeric systems are installed: loose laid and ballasted, partially adhered (with adhesive or asphalt), fully adhered, and mechanically fastened. As with BUR and modified bitumen systems, the insulation can be placed either above or below the roof membrane.

It is evident that there is available a tremendous variety of roofing systems and installation methods are available. Because of this, the utility of an insulation material must be considered on a case by case basis. Extruded and expanded PS foam are good examples of alternatives which are suitable in some applications and not in others. The relatively low melting point and low solvent resistance of PS foam may prevent its use in hot applied BUR and modified bitumen systems as well as in fully adhered elastomeric systems where solvent adhesives are used. However, with the proper construction configuration, this can be overcome. Additionally, PS foam cannot pass Factory Mutual and Underwriters Laboratories fire resistance requirements without the use of underlay or overlay boards (usually perlite or fiberboard) or both.

In the different types of industrial and commercial roofing, the polyurethane or polyisocyanurate insulation provides over 90 percent of the roof's

insulation. This is because the other components (membrane and bitumen or adhesive) are thin and have relatively low thermal resistances. Therefore, the use of alternative materials can cause higher energy costs unless a greater thickness of the alternative is used. Table 8-4 shows the energy losses which would be incurred from using equivalent thicknesses of alternative insulation materials.

Alternative Residential Building Insulation

In the residential building insulation market rigid PU laminated boardstock insulation is used primarily as an insulative sheathing material. It is usually placed on the exterior side of a building's wall studs or supports. The sheathing material is then covered by the building's exterior finish such as brick, stone, stucco veneer. or siding made of wood or metal. Figure 8-1 shows the configuration of a typical residential wall.

Other applications for PU foam boardstock include insulating underlayment beneath roof shingles, sub-slab insulation, slab or basement perimeter insulation, and ceiling insulation. The insulating sheathing adds to the insulative capacity of the insulation which has been placed between the studs (usually fiberglass batts), but the primary purpose of this sheathing is to insulate over the studs. Because wooden or metal studs are poor insulators, and they comprise up to 20 percent of a building's exterior wall surface, using insulative sheathing can provide considerable heating and air conditioning energy savings. Figure 8-2 illustrates the insulative contribution of each element of a typical residential wall.

There are numerous alternatives to PU sheathing, but no other non-CFC blown sheathing material has as high an insulative efficiency (R-value per inch of thickness). Figure 8-3 compares the relative insulative capacities of several common sheathing materials including polyurethane foam, polystyrene foam, expandable polystyrene foam, phenolic foam, fiberboard, plywood, gypsum, and foil laminated paper board. Other sheathing materials include insulating

TABLE 8-4. ESTIMATED ENERGY LOSSES FROM USING ALTERNATIVE INSULATION IN INDUSTRIAL AND COMMERCIAL ROOFING

Board Insulation Material	R-Value Per Inch	Percent Increase In Energy Losses[a]
Phenolic Foam	8.3	-
PU Foam	7.2	0
Fiberglass Board	4.4	35
Cellular Glass	2.9	54
Perlite	2.8	55
Expanded PS Foam (EPS)	3.9	41
Extruded PS Foam	5.1	26
Fiberboard	2.8	55

[a]Assuming insulation comprises 90 percent of the roof's total insulation value.

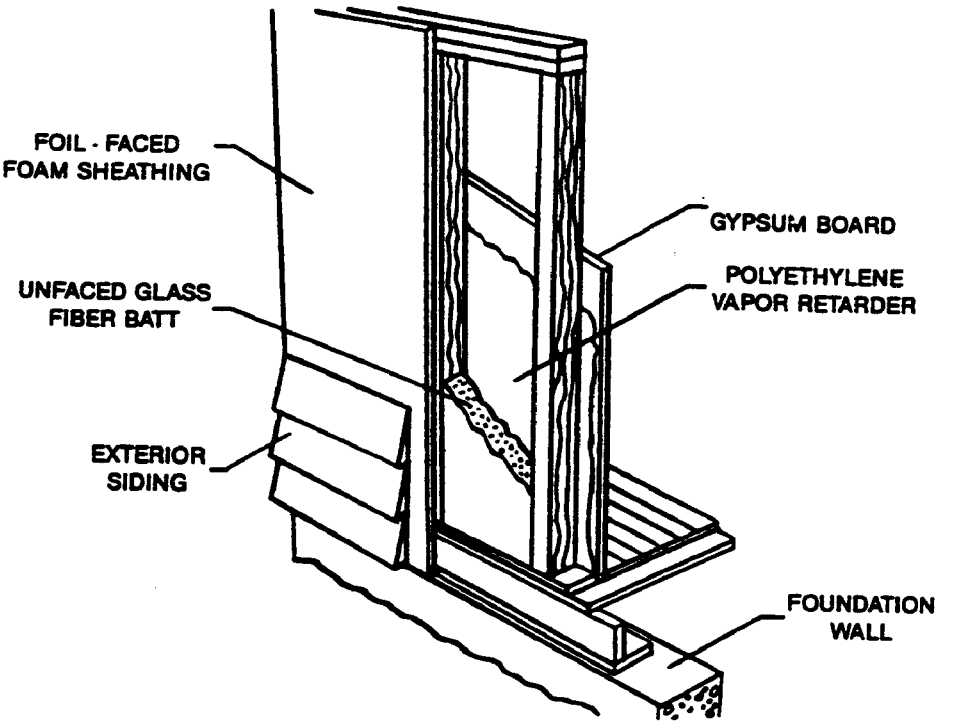

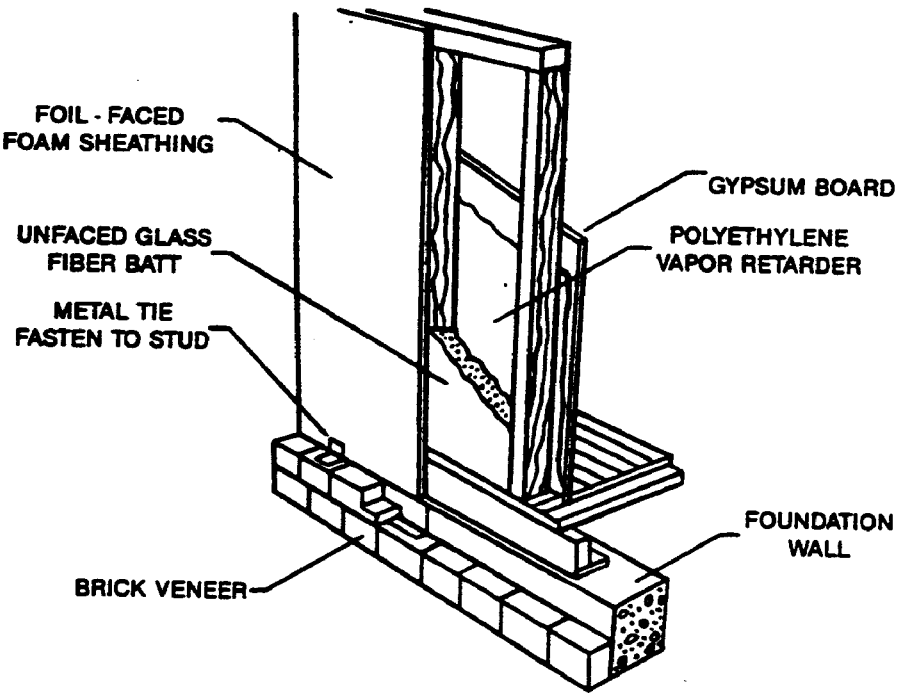

Figure 8-1. Typical residential wall construction. Basic wall with siding (top). Basic wall with brick veneer (bottom).

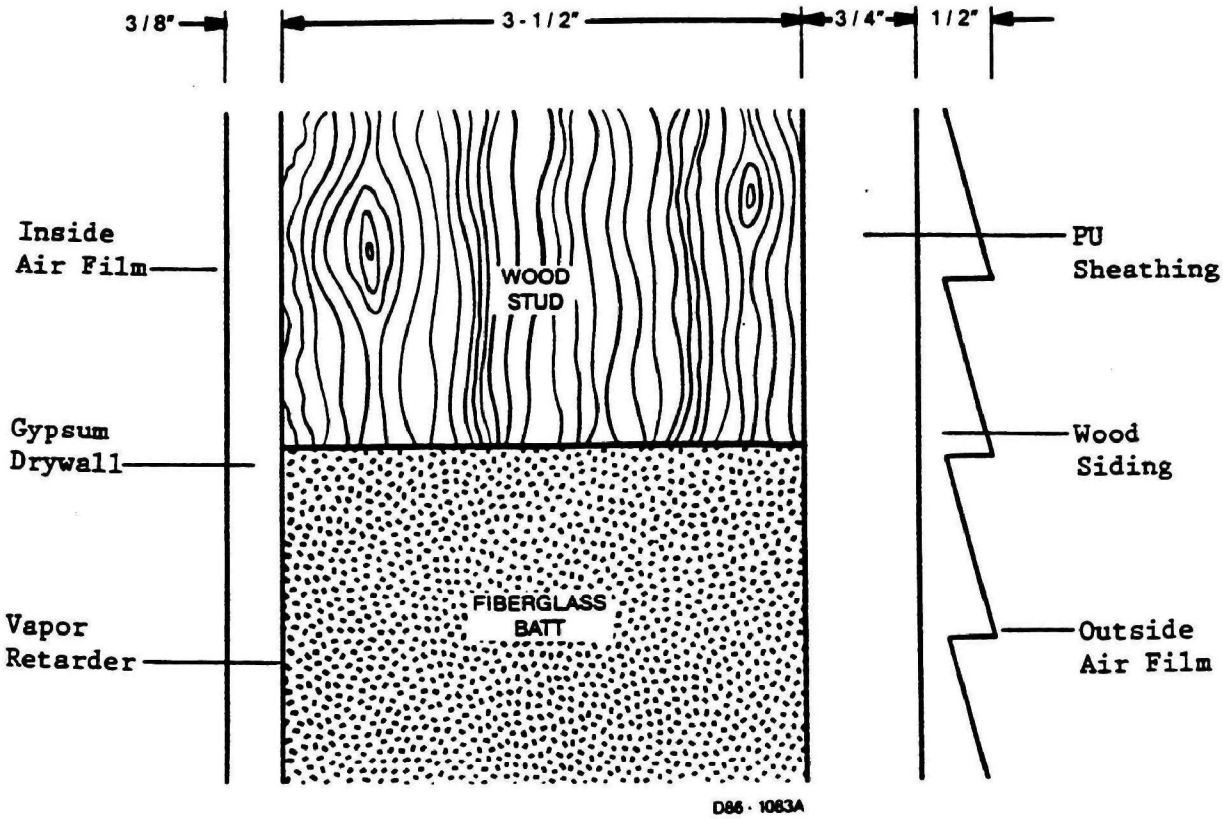

	R-Values Through Frame	R-Values Through Wall
Inside surface film	0.68	0.68
Gypsum board	0.45	0.45
6-mil vapor retarder	—	—
2 x 4 wood framing	4.35	—
R-13 glass fiber batt	—	13.00
PU foam sheathing	5.40	5.40
Lapped wood siding	0.81	0.81
Outside surface film	0.17	0.17
R-Value	11.86	20.51

Total Wall U-Valve = 20%/11.86 + 80%/20.51 = 0.0559
Total Wall R-Valve = 17.9

Figure 8-2. Insulative contribution of individual wall components.

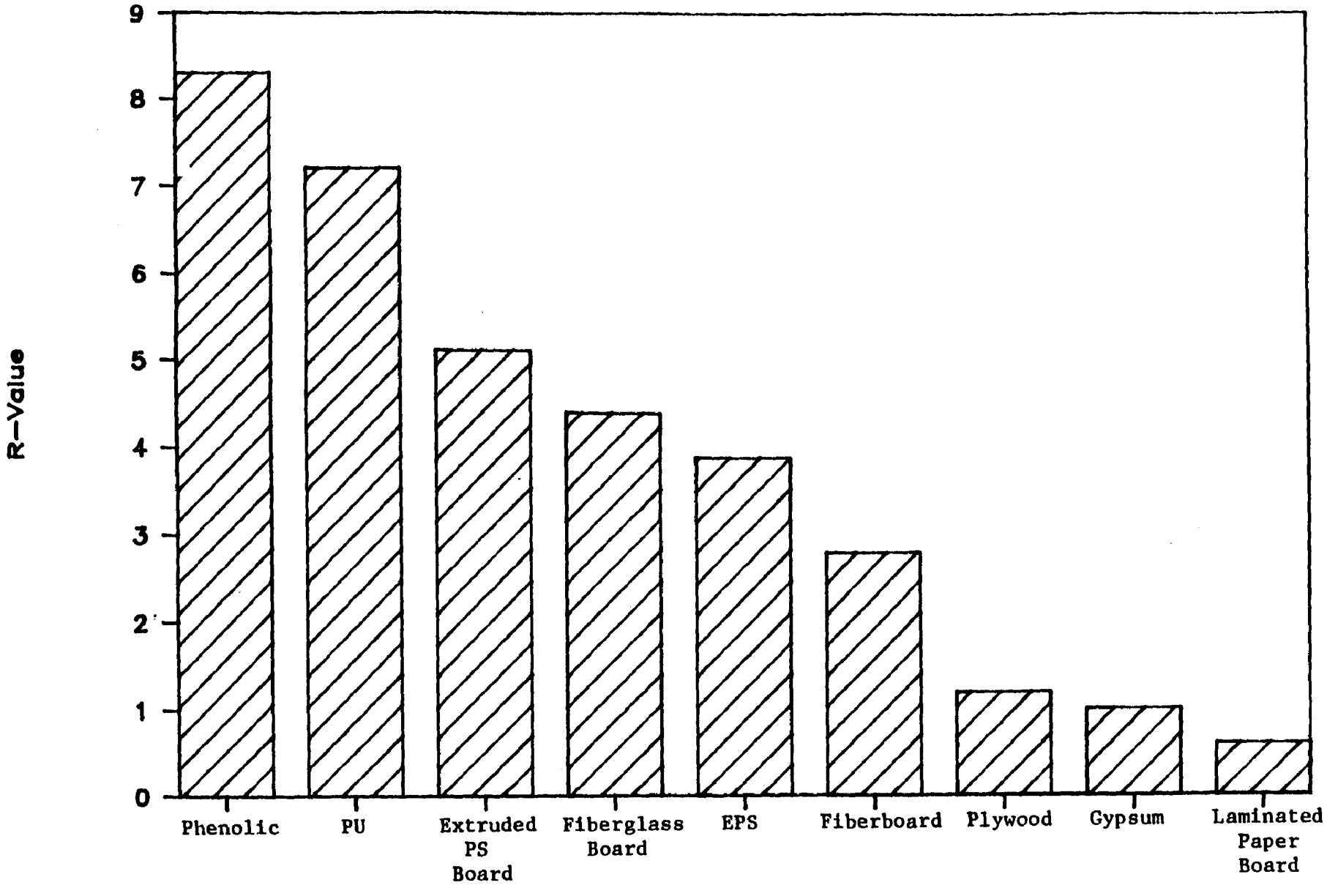

Figure 8-3. R-values per inch for various materials (at 24°C (75°F) mean temperature).

boards made from corkboard, fiberglass, perlite, or vegetable fibers (36). Since the primary purpose of PU sheathing is to insulate the wall, it is convenient to compare alternatives according to their insulative abilities as well as their cost. However, other factors which might need to be considered in a given situation are: local codes and restrictions on certain materials, availability, flammability, vapor retardancy, durability, and installation costs. Table 8-5 shows the estimated material and energy costs associated with using alternative sheathing materials. Most sheathing products have lower material costs, but their use generally results in higher energy losses, hence higher heating and cooling costs.

Another way to investigate alternatives to PU insulation sheathing is to compare options on a basis of a fixed value for the walls total insulative capacity. Since PU foam sheathing has the highest R-value, per unit thickness of all non-CFC blown alternatives, most alternatives will require greater total wall thicknesses. This might mean using greater thicknesses of the sheathings discussed earlier. Figure 8-4 shows the thickness of various sheathing materials required to equal the R-value of 3/4 inch thick PU sheathing (R-5.4).

Another option is to increase the thickness of the fiberglass batts used between the wall studs. This would require use of thicker studs, possibly changing the wall's construction and cost. The wall shown in Figure 8-2 has a total wall R-value of approximately 18. To obtain the same wall R-value without sheathing or any sort of external thermal barrier would require fiberglass batts and wall studs which are 6.5 inches thick. This is nearly double the width of the standard 2x4 wall stud.

Another possibility is using alternative construction materials. An example is Klimanorm®, a lightweight building block recently introduced to the US from West Germany. Block-type residential and commercial construction is common in Europe. This quartz sand/lime agglomerate block replaces all of the major components in a standard wall: sheetrock, stud frame, fiberglass batts,

TABLE 8-5. ESTIMATED RELATIVE MATERIAL AND ENERGY COSTS FOR SUBSTITUTE SHEATHINGS

Sheathing Material	Thickness (inches)	% Material Cost Savings	Estimated R-Value (75°F)	% Increase in Wall Energy Losses (75°F)
Phenolic Foam	0.75	-	6.2	-
Laminated PU Board	0.75	0	5.4	0
Extruded PS Board	0.75	11	3.8	10
EPS Board	0.75	43	2.9	15
Fiberglass Board	1.0	-46	4.4	6
Fiberboard	0.5	24	1.3	25
Plywood	0.5	12	0.6	30
Gypsum (exterior)	0.5	29	0.5	30
Laminated Paper Board	0.5	22	0.3	31
Building Felt	—	90	0.2	32

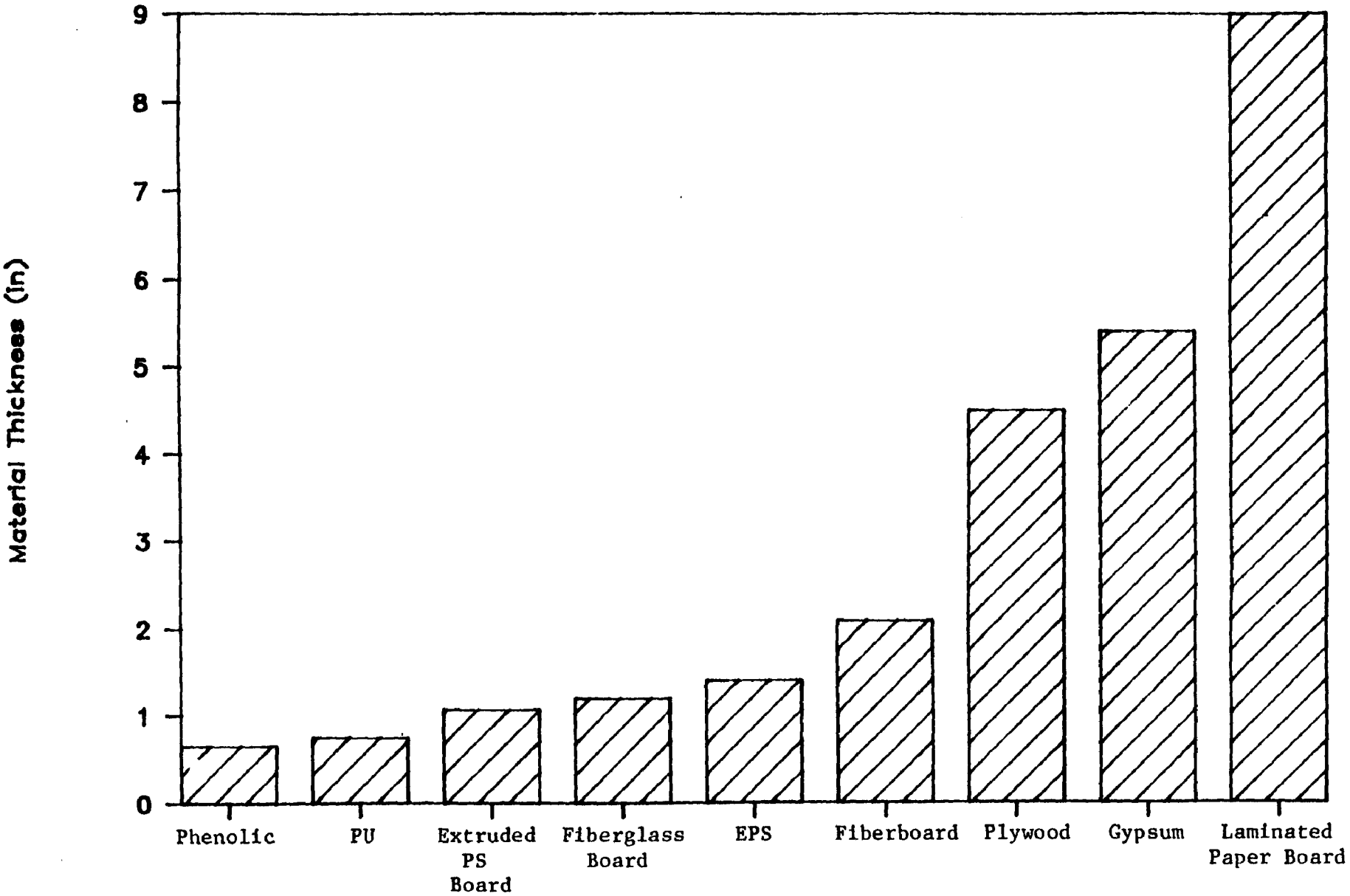

Figure 8-4. Equivalent thickness for various materials (at 24°C (75°F) mean temperature). All values are relative to 0.75 inch laminated PU board.

and sheathing. Depending on the wall thickness, this material gives wall R-values of R-22 to R-30 (37).

Other Building and Industrial Insulation

Industrial and commercial roofing insulation as well as residential insulation comprise nearly 90 percent of the polyurethane and polyisocyanurate foam building insulation market. The remaining 10 percent is used in a variety of applications such as commercial cavity walls, curtain walls, commercial metal buildings, farm buildings, and cold storage facilities. The contributions which PU foam makes to total insulation value of each of these installations are shown in Table 8-6. In addition, PU sprayed foams are often used in industrial applications such as storage tank and pipe insulation. The use of suitable alternatives in these applications would incur energy losses proportional to those shown in the previous sections unless greater thicknesses are used.

Alternative Refrigerated Appliance Insulation

Currently, rigid PU foam insulation is used in a majority of refrigerators and freezers. In 1982, polyurethanes held approximately 65 to 75 percent of the refrigeration insulation market (16). This market share is expected to increase further as demand for higher energy efficiency appliances grows. California and several other states have, or will have, laws requiring appliances be more energy efficient in the near future. These laws, if implemented, argue against many of the available insulating materials, or, conversely, will result in thicker walled appliances with significant loss in usable capacity. The advantages of PU in this application area are:

- Its high R-value allowing thinner walled appliances,
- Ability to be used in pour-in-place applications,

TABLE 8-6. CONTRIBUTION TO TOTAL INSULATION SYSTEM MADE BY PU FOAMS IN VARIOUS APPLICATIONS

Application	Contribution To Total Insulation
Commercial Cavity Wall	76%
Commercial Curtain Wall	42%
Commercial Metal Buildings	90%
Farm Buildings	90%
Cold Storage Buildings	95%

- Structural strength contributed to the appliance, and

- Moisture resistance.

In the past, refrigeration appliances were insulated exclusively with fiberglass. Presently, only 20 to 30 percent of the refrigeration insulation used is fiberglass (16). Based on current trends, refrigeration unit manufacturers would revert to the use of fiberglass only if there were no other technically feasible alternatives.

From the manufacturing standpoint, the increased labor cost of installing fiberglass insulation balances against the higher material costs for foam insulation (16). However, for a given wall thickness the fiberglass insulated unit will necessarily consume more energy. The same holds true for other potential alternatives such as extruded PS board or expandable bead PS board. Table 8-7 shows the relative costs associated with alternative insulation materials for a typical refrigerator. Expandable PS and extruded PS board both are more difficult to install than fiberglass. However, they have better insulation properties.

TABLE 8-7. RELATIVE COSTS OF ALTERNATIVE REFRIGERATOR INSULATIONS[a]

	Rigid PU Foam	Extruded PS Foam	Expanded PS Foam	Fiberglass
Material Cost	1	1	1	1/3
Labor Cost	1	4	4	3
Energy Cost	1	1.4	1.9	2.3

[a]Assuming no change in the dimensions of the appliance cabinet.

Source: (16)

Changing to an alternative insulation requires balancing the manufacturing costs against the energy costs. Using an alternative insulation without altering the appliance's wall thickness reduces the material costs, minimizes the increase in labor costs, allows the manufacturer to use an existing appliance line, and does not alter the cold storage volume available to the customer. However, the customer will pay more in energy costs because the unit is not as well insulated. On the other hand, if the wall thickness is increased to provide equal insulation, the energy costs will be the same, but the manufacturer must redesign and retool for an entirely new appliance. In addition, a complete redesign may be required since PU foam provides 80-90 percent of the structural support in present-day appliances.

As a result of more stringent appliance energy standards, an emphasis has been placed on new materials and designs for refrigeration systems. Researchers are currently devising ways to increase the efficiency of refrigeration units to conserve energy. New materials such as vacuum board panels are being considered, as well as new cabinet designs.

Alternative Transportation Insulation

In the transportation business, poured and sprayed PU foams serve as insulation for refrigerated truck trailers, rail cars, tank cars, barges and ships. Since these are essentially mobile refrigerators, much of the discussion of refrigeration insulation applies here. Polyurethane foams endure very well the vibration and shocks associated with transportation, and they also contribute structural support by adhering to the walls. The alternatives such as fiberglass, EPS, or extruded PS will require thicker walls or higher refrigeration costs. Additionally, fiberglass batts will tend to collapse due to vibration and absorb H_2O if walls are damaged (16).

If the thickness of the walls is increased, then the space available for freight decreases, and the weight of the vehicle increases. Otherwise, the wall thickness can be maintained and the cooling costs are higher. Both options result in a net increase in transportation costs, and switching to an alternative such as extruded or expandable polystyrene will require optimization to minimize the increased cost.

Alternative Packaging Materials

In packaging applications, pour-in-place polyurethane foams are widely used. Their ability to fill non-uniformly shaped voids, ease of use, availability in a range of compressive strengths, light weight, and creep resistance make them suitable for a wide range of packaging applications.

A unique use for these foams is for one-time packaging or for packaging of odd shaped items which require rigid support. For these applications, alternative materials such as preformed rigid packaging might be expensive or provide inferior protection.

For regularly shaped items or items not requiring rigid support, there is a wide variety of packaging alternatives such as non-CFC blown loose-fill expanded polystyrene, shredded and wadded paper, cellulose wadding, die-cut cardboard, wood shavings, pre-formed expanded polystyrene packing blocks, and plastic film bubble wrap.

Packaging is a custom operation and the packaging material chosen reflects the specific needs of the packer. However, the ease of use of poured foam systems has probably encouraged use in "non-essential" applications where other packing materials would be just as suitable, albeit at possibly higher material or labor costs.

ALTERNATIVES TO CFC BLOWN POLYSTYRENE FOAM PRODUCTS

Since the 1960s, polystyrene foam sheet products have gradually replaced competing products fabricated from traditional materials. The benefits of polystyrene foams such as light weight, strength, ease of forming, moisture resistance, low cost, and thermal insulation properties have spurred this growth. Not only are foam producers increasing service to existing markets, they are working to penetrate new areas such as salad trays for self-service supermarket salad bars, pizza boxes, ice cream containers, and reheatable packages for use in microwave ovens (9). With few exceptions, the polystyrene

foam serves essentially the same purpose as the material it replaced. Indeed, in many applications, polystyrene and its competitor can be found in use side-by-side. An example is egg cartons. In many stores one can find both paper and polystyrene egg cartons in the same display case.

A distinction should be drawn here between CFC blown polystyrene foam sheet and non-CFC blown PS foam sheet. CFC blown foams comprise only 50 percent of the PS foam sheet market, and the remainder of the market is held predominantly by hydrocarbon blown foams. Therefore, in considering alternatives to CFC blown PS foam sheet, a suitable substitute is foam produced with hydrocarbons. In each application of polystyrene foam materials, there can be found a variety of suitable substitutes. These application areas include: stock food trays; egg cartons; single service plates, cups, and bowls; hinged containers; and insulation board. Table 8-8 lists specific alternatives to CFC-blown polystyrene foam products in several application areas.

The following sections discuss the applicability of various substitutes for CFC blown polystyrene foam products. Since it is not known to what extent specific PS-foam sheet products are blown with hydrocarbons, this discussion will simply examine suitable replacements for the foam products regardless of the blowing agent used to fabricate them.

Stock Food Trays

Polystyrene sheet has found wide use as a packaging tray for meats and produce. Because it is stiff, light weight, and waterproof, polystyrene foam trays are particularly well suited for packaging flaccid and irregularly shaped meats. In the past, stock food trays were composed of paper fiber materials which became soggy and weak and they absorbed the juices from the meat. However, currently available plastic laminated paper products should not have this drawback. Solid plastic trays can also serve the same purpose, but they are heavier (using more plastic) at an equivalent strength to foams.

Application	Alternatives	CFC Emission Reduction Potential
Thermoformed Sheet:		
Stock Food Trays	Hydrocarbon Blown PS	100%
	Solid Plastic Trays	100%
	Plastic Film Wrap	100%
	Plastic Bags	100%
	Coated Paper Trays	100%
	Butcher Paper	100%
	Controlled Atmosphere Packaging	100%
Egg Cartons	Hydrocarbon Blown PS	100%
	Paper	100%
Single Service Goods:		
Plates, Cups, and Bowls	Hydrocarbon Blown PS	100%
	EPS	100%
	Paper	100%
	Solid Plastic	100%
Hinged Containers	Hydrocarbon Blown PS	100%
	Paperboard Containers	100%
	Solid Plastic Containers	100%
	Paper Wraps	100%
	Foil Wraps	100%
	Plastic Wraps	100%
	Combination Laminated Wraps	100%
Board Stock:		
Insulation Sheathing	-See Polyurethane Insulation Sheathing Alternatives-	

Other potential replacements for foamed polystyrene stock food trays are plastic film wrap, heat sealed plastic bags, or butcher paper (though it prevents viewing of the product).

There is a trend in the fresh food packaging industry which might eventually lead to a great reduction in the use of polystyrene foam stock food trays. This trend is towards a new packaging method called controlled atmosphere packaging (CAP). In CAP, the product such as a cut of red meat is sealed along with an inert atmosphere in a plastic tray. The tray and its lid are composed of a barrier plastic which prevents exchange of gases. The result is a greatly extended shelf life. Another possible benefit of this technology is that it would allow centralized packaging. This could provide substantial savings over the current in-store preparation and wrapping methods which employ polystyrene foam trays and plastic wrapping film. In a recent trial of CAP red meat packaging in 86 of its stores, Kroger Company, a Cincinnati-based supermarket chain said that it achieved a six to ten cent per pound overall cost savings (40).

Egg Cartons

Retail egg packaging, once the exclusive domain of paper fiber egg cartons, has seen a large increase in the use of polystyrene foam egg cartons. Interestingly, paper egg cartons whose market share with the major grocery chains had fallen as low as 5.5 percent, have recently seen a comeback. The current market share for paper cartons is estimated at 65 percent. Although the cost of each of the cartons is roughly equivalent, the reason for this turnaround is increased aggressiveness by the paper industry. Armed with research results showing that paper egg cartons incur one-third the egg breakage of plastic cartons, the marketers of paper cartons have been working to regain more of this market. While the makers of polystyrene foam materials stress visual appeal and moisture resistance, the paper industry's research indicates that the customers' only real concern when buying eggs is that none of them be broken (41).

'lates, Cups, and Bowls

Polystyrene-foam plates, cups, and bowls consume one-third of all the extruded PS-foam sheet produced. All of these products have viable paper or plastic alternatives which are currently available and competing in the marketplace with PS-foam products. The major benefits of extruded PS foam are its high strength to weight ratio, thermal insulating properties, and low cost.

In the plate market, PS-foam products compete against both the inexpensive common paper plate and the thicker more expensive paper plates such as Chinet® dinnerware. Laminated paper plates and solid plastic plates are also competing in the market place. Table 8-9 compares retail costs for a variety of single-service plates. One company, James River Corporation, markets under their Dixie Division both coated paper and polystyrene-foam plates at very similar prices. This indicates the suitability of paper as a replacement material. Just as with disposable plates, the disposable bowl market is divided among paper, laminated paper, foamed polystyrene, and solid plastic products.

The major contender for replacing extruded polystyrene foam cups is expandable bead polystyrene cups. These cups are readily available and have a large share of the disposable cup market. Like PS-foam sheet cups, they have good insulation properties as well as being lightweight and sturdy. Where thermally insulating cups are not required, there are available a number of solid plastic cups as well as paper cups.

inged Containers

The hinged polystyrene-foam take-out tray was pioneered by McDonald's corporation and is now widely used throughout the food industry. These containers have seen a tremendous growth, and innovative applications such as McDonald's McD.L.T.® will add to this trend. McDonald's aggressive

TABLE 8-9. RETAIL COSTS FOR A VARIETY OF SINGLE SERVICE PLATES

Manufacturer	Brand Name	Retail Cost (¢/Plate)		
		PS-Foam	Solid Plastic	Paper
Mobil	Hefty® (plain)	2.5	—	—
	(Printed)	4.5	—	—
James River Corp.	Dixie® (Printed)	3.4	—	3.3
Keyes Fiber	Chinet® (Printed)	—	—	5.5
Solo Plastic Cup Co.	Solo® (Printed)	—	5.6	—
Generic	Paper (Plain)	—	—	1.3

advertising campaign for the McD.L.T.® is essentially based on the thermal insulating properties of polystyrene foam and on the package's design which allows separation of a hamburger's hot and cold elements.

Some of the advantages provided by hinged polystyrene-foam containers are thermal insulation, time savings for food service employees, impermeability to moisture, strength, light weight, and visual appeal. These containers have good visual appeal because they can be colored and printed, and they do not become soggy and wrinkled as would a paper wrap.

Substitutes for these hinged trays include: non-CFC blown PS foam trays; paperboard and solid plastic containers; as well as laminated paper, plastic, and foil wraps. All of these substitutes are widely used in take-out food applications. Burger King serves a number of its sandwich products in plastic laminated paper boxes which somewhat resemble the PS-foam enclosures. Some of their sandwiches are also wrapped in paper. Other fast food chains, such as Arby's or Wendy's, serve their sandwich products wrapped in a foil-laminated paper sheet. All of these products seem to provide the same essential function, so companies have chosen between them on a basis of cost, aesthetics, and marketing potential.

Printed or decorated polystyrene-foam hamburger containers are roughly equivalent in price to their counterpart laminated paperboard boxes. However, both of these options are more expensive than simple foil-laminated paper sheet wraps (42).

Insulation Board

Extruded PS foam board functions primarily as an insulation material. Like rigid polyurethane foam insulation, PS-foam is used as frame wall sheathing, foundation sheathing, and over or under roof insulation. Table 8-10 shows the market distribution for PS foam insulation. The relatively high moisture resistance of PS foam gives it added usefulness for below grade

TABLE 8-10. 1985 MARKET DISTRIBUTION FOR EXTRUDED POLYSYTRENE INSULATION FOAMS

Market	Market Distribution (Percent)
Industrial and Commercial Roofing	35
New Residential	24
Retrofit Residential	10
Masonry Wall	25
Farm Buildings	2
Non-Residential Retrofit	3
Miscellaneous	1
	100

Source: (48)

insulation applications for basements, foundations, and earth-sheltered homes. Materials which compete with PS foam in the insulation market are: fiberglass, fiberboards, expandable polystyrene foam (EPS), and rigid polyurethane foams.

The alternatives to rigid polyurethane foams which were discussed earlier in this section also apply to extruded PS foams. Again, options involve tradeoffs between energy, materials, and labor costs. This is because, with the exception of rigid polyurethane and phenolic foams, alternatives to extruded PS foams have relatively inferior insulating properties.

One candidate for replacement of extruded PS foam is expanded polystyrene board. This substitute already competes in the insulation market and uses no CFCs. Its thermal resistance per inch of thickness is approximately 24 percent lower than that of extruded PS foam, but when installed as sheathing in a wall system, for example, the total wall R-factor would be only five percent lower than that of a similar wall system using an equal thickness of extruded PS foam sheathing. A further illustration of the potential for substituting EPS for extruded PS insulation is that one-inch-thick EPS has an R-factor of about 3.8, and three-fourths-inch thick extruded PS has an R-factor of about 3.8. Therefore, at a slight increase in material cost, there is equivalent energy and labor costs with 100 percent reduction in CFC emissions.

ALTERNATIVES TO OTHER CFC BLOWN FOAM PRODUCTS

Phenolic foam is used primarily as an insulation material. Like rigid polyurethane foam insulation, phenolic foam is used as frame wall sheathing and over or under roof insulation. Phenolic foam currently hold an 8 percent share of the total roofing and sheathing insulation market (50). The alternatives to rigid polyurethane foams which were discussed earlier in the section also apply to phenolic foam.

Polyolefin foams are used primarily for cushion packaging and surface protection. This market is a complex and diverse one where selection of the material of choice is often difficult. For one-time packaging or for a delicate packaging requirement, alternative materials may not be able to provide adequate protection. This is especially true where polyethylene foam plank is used since it represents one of the highest performance materials used in cushion packaging.

In other instances, a wide variety of packaging alternatives such as non-CFC blown expandable PS foam, wood shavings, pre-foamed expanded polystyrene packing blocks, and plastic film bubble wrap can be used as alternatives to polyolefin foams.

Although polyolefin foams are one of the most costly packaging materials used, on a volume basis, the physical attributes of these foams often make them the most cost effective when all possible factors are considered.

SECTION 9
ADDITIONAL CFC CONTROL METHODS

There are alternative methods for reducing the CFC emissions associated with rigid polymer foams. These methods are either developmental or require further investigation to assess their suitability. For rigid polyurethane foams, one CFC reduction approach which warrants further research is the recovery of CFCs from foam-containing products prior to their disposal. For nonpolyurethane foams a CFC emission control technology which has potential is the use of blowing agents which are neither CFCs nor hydrocarbons.

RECOVERY OF CFC-11 UPON PRODUCT DISPOSAL

In rigid polyurethane foams, CFCs have a very low diffusion rate; therefore, the blowing agents are banked for extremely long periods of time. This fact gives rise to the possibility of recovering the CFCs at the time of disposal of the foam containing product. Application areas in which it might be possible to recover CFCs upon foam disposal include refrigerated transport vehicle insulation, building and home insulation, and refrigerated appliance insulation. While it may be possible to recover CFC-11 from these insulation foams, it is probably not economical as long as the value of CFC-11 is less than one dollar per pound.

Refrigerated transport vehicles such as ship and barge containers, truck trailers, tank trucks, tank cars, and boxcars probably offer the best opportunity for CFC recovery. When a particular transport vehicle reaches the end of its useful service life, it could be transported to a recycling facility which would be capable of processing both the scrap metal and the CFC-containing foam insulation. At the recycling facility, the foam would be pulverized to release the blowing agent which would then be recovered in a carbon adsorption system.

The economics of recovery or destruction of the 18 to 36 kg (40 to 80 pounds) of CFCs in these vehicles would benefit from the simultaneous recovery of recyclable scrap metal. The ownership of these types of vehicles is somewhat consolidated (more so than for privately owned refrigerators), so collection of the units is relatively simple. Also, the vehicles are mobile and can be moved easily to a central recovery facility.

Another area in which there is some potential for disposal recovery is demolition of commercial and residential buildings which are insulated with polyurethane foam. The recovery method here would be similar to that in which asbestos-containing materials are removed from buildings which are being torn down. The polyurethane foam sheathing and roofing would be removed with care being taken not to cause excessive damage to the foam, and then it could be transported to a facility in which the CFCs would be released by crushing the foam and then recovered through carbon adsorption.

The economics for this method of CFC-11 emission control would be less favorable than for transportation insulation because of the added labor and transportation costs. The insulation foam used in a 2000 square foot home would contain approximately 23 kg (50 pounds) of CFC-11, while a large building or apartment complex would contain much more. Also, the applicability of this method has two major limitations. First, the buildings would have to be dismantled piecemeal rather than demolished, and second, most structures which contain polyurethane insulating foams are relatively new, and are therefore still serving a useful purpose.

Another possibility for disposal recovery of CFCs is refrigerated appliances. Typically, these appliances have lives of nearly 15 years, and at the end of their useful life, are disposed of in a variety ways. Often, old units are buried or left to decay at a dump site. In other cases, the merchant who supplies a new appliance will take the old unit to a salvager who removes the refrigeration equipment (motor, compressor, condenser, and evaporator) for their scrap value. The cabinet is then compacted and buried in a landfill.

A typical refrigerator contains less than two pounds of CFC-11 in its insulation foam; therefore, for a recovery operation to be efficient, large numbers of refrigeration units would have to be collected centrally and crushed in a compacter which is equipped with a carbon adsorption recovery unit. Because of the costs which would be incurred in transporting these appliances to a central recovery facility, this control does not appear to be economically feasible.

USE OF NON-CFC, NON-HYDROCARBON BLOWING AGENTS FOR NONPOLYURETHANE FOAMS

Nonpolyurethane foams emit most of their CFCs prior to disposal; therefore, reduction of emissions from the product and the manufacturing process is the best approach to CFC emission control. This can be accomplished through the use of non-CFC containing blowing agents. The use of hydrocarbon blowing agents is discussed in Section 6 of this report; however, this technology presents fire hazards and is vulnerable to regulations on VOC emissions. Carbon dioxide and nitrogen are potential blowing agents which might reduce both CFC and VOC emissions.

These gases are auxiliary blowing agents which may be used with either CFCs or hydrocarbons for nonpolyurethane foam manufacturing. The result is a reduction in use, and therefore a reduction of emissions, of CFCs or hydrocarbons. There is also a cost savings because these gases are considerably cheaper than the blowing agents they substitute. Carbon dioxide (about $0.10/lb), for example, may be blended in concentrations up to 15 to 25 percent with CFC-12 ($0.74/lb) when used with a system using about five to seven percent CFC. It is reported that European processors have used blowing agent blends containing up to 30 percent CO_2. In addition to lower costs, another benefit contributed by CO_2 is an improvement in surface sheen.

Currently, solubility problems prevent the use of 100 percent CO_2 as a blowing agent for low density foams. Carbon dioxide has a low solubility in the molten polymer resin, and the miscibility of CFC helps to solubilize the

CO_2 in the polymer melt. Also, because carbon dioxide has less of a plasticizing effect than CFC, higher extruder temperatures are required for operation.

REFERENCES

1. Production Sales, and Calculated Releases of CFC-11 and CFC-12 Through 1984. Chemical Manufacturers Associations (CMA), Washington, D.C., October 1985.

2. Hamitt, J.K., et al. Product Uses and Market Trends for Potential Ozone Depleting Substances 1985 - 2000. Rand Corporation, May 1986.

3. Annual Consumption Report. Modern Plastics. p. 64, January 1986.

4. Khalil, M.A.K., and R.A. Rasmussen. The Release of Trichlorofluoromethane from Rigid Polyurethane Foams. JAPCA Volume 36, n2 (February 1986).

5. E.I. DuPont de Nemours & Company. Freon Products Division. Nonaerosol Propellant Uses of Fully Halogenated Halocarbons. Information Requested by the Environmental Protection Agency, March 15, 1978.

6. Parkinson, D.B., and A. Miller. Integrated Solvents Analysis: Blowing Agents. Prepared by SRI International for the U.S. Environmental Protection Agency, Contract 68-02-3976, January 1986.

7. Kirk Othmer Encyclopedia of Chemistry Technology, John Wiley and Sons, Third Edition, 1978, Volume 23.

8. Nissel, F.R. Extruding Thermoplastic Foams. Modern Plastics Encyclopedia 1985-1986, p. 236.

9. Smoluk, George R. PE, PS Foam Sheet Add Multi-Market Appeal. Modern Plastics, Volume 63, No. 5, pp. 72-74, May 1986.

10. Lapp, Thomas W., Ralph R. Wilkinson, Howard Gadverry, and Thomas Weast. Chemical Technology and Economics in Environmental Perspectives, Task III, Chlorofluorocarbon Emission Control in Selected End-Use Applications, Final Report, Report No. EPA 560/1-76-009, November 1976.

11. PUR Dynamics. Modern Plastics. January 1986, pp. 57-68.

12. U.S. Foamed Plastics Markets and Directory. Technomic Publishing Company.

13. Palmer, Adele R., William E. Mooz, Timothy H. Quinn, and Kathleen A. Wolf. Economic Implications of Regulating Chlorofluorocarbon Emissions from Nonaerosol Applications. Rand Corporation. June 1980.

14. Gordon, J.B. Foam Processing - Expandable Foam Molding. Modern Plastics Encyclopedia, 1986-1986, pp. 233-235.

15. Kirk-Othmer Encyclopedia of Chemical Technology. John Wiley and Sons, Third Edition, 1978, Volume 13.

16. Mooz, W.E., et al. Technical Options for Reducing Chlorofluorocarbon Emissions. Rand Corporation, March 1982.

17. Peach, Norman. Plastic Foams: Options, Methods, and Materials. Plastics Engineering, August 1981, pp. 19-24.

18. Letter Report. James G. Burt to Radian Corporation - Austin, Texas, August 19, 1986.

19. Clarkson, D.C. Reduction of Vented Pentane Emissions During the Production of Expandable Polystyrene. The Chemical Engineer, February 1980, pp. 111, 114.

20. Sweetheart Plastics. Testimony submitted to the U.S. Food and Drug Administration, February 22, 1976.

21. Personal Communication with Phillips Chemical Company, March 15, 1981.

22. Personal Communication with Tuxis Corporation, August 28, 1986.

23. Personal Communication with Mobil Chemical, August 1986.

24. Personal Communication with Genpak, August 29, 1986.

25. Personal Communication with Florida Containers, February 2, 1981.

26. Personal Communication with W.R. Grace Company, September 8, 1986.

27. Radian Corporation Chemical Containment Laboratory, Material Safety Database, August 1986.

28. Material Safety Data Sheet: n-Pentane. Phillips 66 Company, August 1985.

29. Material Safety Data Sheet: Isopentane. Phillips 66 Company, March 1986.

30. Material Safety Data Sheet: n-Butane. Phillips 66 Company, November 1985.

31. Material Safety Data Sheet: Freon® 12. E.I. DuPont de Nemours & Company, October 1985.

32. Radian Corporation. Technical Note: Proposed Conceptual Design to Control Chlorofluorocarbon Emissions from Flexible Polyurethane Slabstock Manufacture, June 1981.

33. A Search for Alternatives to the Current commercial Chlorofluorocarbons. Presented by DuPont Chemical Company at the EPA Workshop on Demand and Control Technologies, March 6-7, 1986, Washington D.C.

34. The DuPont Development Program on Alternatives to Commercial Chlorofluorocarbons. Presented by DuPont Chemical Company to U.S. EPA, March 1980.

35. Hydrogen-Containing Chlorofluorocarbons. No. 14623, Research Disclosure, Kenneth Mason Publications, LTD., Homewell Havant, United Kingdom, 1978.

36. Insulation. Consumer Protection Division, Attorney General, State of Texas, Austin, Texas.

37. Klimanorm. Product information pamphlet, Madison Interests, Austin, Texas, 1986.

38. Celotex® - Professional Builder's Manual. Product Information Pamphlet, the Celotex Corporation, 1986.

39. Styrofoam® - Specifications and Applications. Product Information Pamphlet, The Dow Chemical Company, 1986.

40. Sueller, J.A. Smart films give a big lift to controlled atmosphere packaging. Modern Plastics, McGraw-Hill Publishing, Volume 63, N. 8, pp. 58-59, August 1986.

41. Personal Communication with Packaging Corporation of America, August 1986.

42. Personal Communication with Genpack Corporation, August 1986.

43. Norton, F.J. Diffusion of Chlorofluorocarbon Gases in Polymer Films and Foams. Journal of Cellular Plastics, 18 (5), pp. 300-315 (1982).

44. Written communication with J.G. Burt (consultant), September 25, 1986.

45. Personal communication with Mobil Chemical Company, Plastics Division, September 26, 1986.

46. Protection Against Depletion of Stratospheric Ozone by Chlorofluorocarbons. National Academy of Sciences. Washington, D.C., 1979.

47. Letter Report, Farber Associates to Radian Corporation, Austin, TX, January 1987.

48. Written communication from Jim Walters Corporation Research, January 1987.

49. Personal communication with Dow Chemical U.S.A., Granville, OH and Freeport, TX, August 1987.

50. Personal communication with Koppers, Inc., Oak Creek, WI, August 1987.

51. E.I. DuPont de Nemours & Company, Plastic Products and Resin Department, Microfoam Polypropylene Foam, Information Requested by the Environmental Protection Agency, March 1978.

52. Personal communication with Mobil Chemical, Temple, TX, August 1987.

53. Chemical Prices, Chemical Marketing Reporter, Schnell Publishing Company, September 1, 1986.

54. Carbon Adsorption Isotherms for CFC Compounds, Calgon Corporation, Pittsburgh, PA, 1986.