Pollution Abatement in the Fruit and Vegetable Industry

WASTEWATER TREATMENT

U.S. ENVIRONMENTAL PROTECTION AGENCY
OFFICE OF TECHNOLOGY TRANSFER
WASHINGTON, D. C.

Pollution Abatement in the Fruit and Vegetable Industry

Volume 3

WASTEWATER TREATMENT IN THE FOOD PROCESSING INDUSTRY

U. S. ENVIRONMENTAL PROTECTION AGENCY
Office of Technology Transfer
Washington, D. C.

1975

While the recommendations in this publication are based on scientific studies and wide industry experience, references to operating procedures and methods, or types of instruments and equipment, are not to be construed as a guarantee that they are sufficient to prevent damage, spoilage, loss, accidents or injuries, resulting from use of this information. Furthermore, the study and use of this publication by any person or company is not to be considered as assurance that that person or company is proficient in the operations and procedures discussed in this publication. The use of the statements, recommendations, or suggestions contained, herein, is not to be considered as creating any responsibility for damage, spoilage, loss, accident or injury, resulting from such use.

TABLE OF CONTENTS

CHAPTER		Page
I.	BACKGROUND	
	IMPORTANT WASTE CHARACTERISTICS	1
	Sampling, Testing, and Flow Measurement	5
	TYPICAL WASTEWATER CHARACTERISTICS	7
	Changes in Waste Strength	11
	EFFLUENT REQUIREMENTS	13
	Federal Requirements	13
	State Requirements	24
	Local Requirements	24
	COST INFORMATION AND OTHER DATA	25
II.	PRETREATMENT	
	BACKGROUND	26
	Ordinance Requirements	27
	Economic Considerations	27
	Production Increases	27
	By-Product Recovery	28
	TECHNOLOGY	29
	Screening	29
	Neutralization	34
	Flow Control	36
	Soil Removal	36
	FURTHER TREATMENT	37
	COMMUNICATIONS	39
III.	FULL TREATMENT	
	DEFINITIONS	40
	REQUIREMENTS	43
	EPA Standards	43
	Other Considerations	44
	PRIMARY TREATMENT	45
	Gravity Sedimentation	46
	Air Flotation	49
	Complete Systems	51
	BIOLOGICAL SECONDARY TREATMENT	53

AERATION METHODS 54
PONDING SYSTEMS 55
Stabilization Ponds 57
Aerated Ponds 57
HIGH RATE PROCESSES 58
Activated Sludge 58
Activated Biological Filter (ABF) 72
OTHER HIGH RATE PROCESSES 75
Rotating Biological Contactors (RBC's) 75
Biological or Trickling Filters 76
NUTRIENT REQUIREMENTS 78
TERTIARY (ADVANCED) WASTE TREATMENT 78
Chemical Precipitation and Sedimentation 80
Filtration 82
Carbon Adsorption 86
Ion Exchange 87
Reverse Osmosis 89
CHLORINATION 90
OPERATION AND MAINTENANCE 91

IV. LAND TREATMENT AND DISPOSAL
PROCESSES 94
APPLICATION METHODS 96
SITE CRITERIA 97
PRETREATMENT REQUIREMENTS 97
LOADING CONSTRAINTS 98
Hydraulic Constraints 98
Treatment Constraints 100
SYSTEM OPERATION AND MANAGEMENT 103
COSTS OF ALTERNATIVE APPLICATION METHODS 105

V. SOLIDS DISPOSAL
SOURCES AND NATURE OF SOLIDS 107
In Plant Solids (Residuals) 107
Treatment Plant Solids 110
Screenings 110
Primary Treatment 110
Secondary Treatment 112
Tertiary Treatment 114
Solids Handling 114
DIGESTION 116
THICKENING 117

DEWATERING 117
Vacuum Filters 120
Centrifuges 122
Other Methods 122
Sludge Drying Beds and Lagoons 126
METHODS OF DISPOSAL 126
LAND DISPOSAL OF WASTE SOLIDS 128
Pretreatment Requirements 129
Application and Incorporation Methods 129
Site Selection Criteria 130
Application Rate Constraints 130
Management and Operation 131
Cost of Waste Solids Delivery and Application 131

LIST OF REFERENCES 133

LIST OF FIGURES

		Page
Figure II-1	Tangential Screen	31
Figure II-2	Silt Clarifier	38
Figure III-1	Effect of Treatment on Solids and BOD	42
Figure III-2	Clarifier	48
Figure III-3	Dissolved Air Flotation Clarifier	50
Figure III-4	Primary Treatment Plant Diagram	52
Figure III-5	Floating Mechanical Aerator	56
Figure III-6	Activated Sludge Plant Diagram	63
Figure III-7	Activated Sludge Plant	67
Figure III-8	Activated Sludge Plant	68
Figure III-9	Package Activated Sludge Plant	69
Figure III-10	Activated Biological Filter Tower	73
Figure III-11	ABF/Activated Sludge Plant Diagram	74
Figure III-12	Trickling Filter Plant Diagram	77
Figure III-13	Pressure Filter	83
Figure V-1	Vacuum Filter	121
Figure V-2	Solid Bowl Centrifuge	123
Figure V-3	Disk Nozzle Centrifuge	124
Figure V-4	Basket Centrifuge	125
Figure V-5	Gravity Sludge Dewatering Unit	127

LIST OF TABLES

		Page
Table I-1	Importance of Wastewater Characteristics	4
Table I-2	Typical Raw Wastewater Characteristics	8
Table I-3	Factors Contributing to Raw Waste Load Variables	12
Table I-4	EPA Effluent Limitation Guidelines	14
Table II-1	Cost Summary: Flow Measurement and Screening	33
Table II-2	Cost Summary: Neutralization	35
Table III-1	Full Treatment Unit Processes	41
Table III-2	Primary Treatment Design Criteria	47
Table III-3	Cost Summary: Aerated Lagoon System	59
Table III-4	Secondary Treatment Process Comparison	60
Table III-5	Secondary Treatment Design Criteria	64
Table III-6A	Cost Summary: Activated Sludge System	70
Table III-6B	Cost Summary: Activated Sludge System with Aerobic Digestion and Dewatering	71
Table III-7	Available Nutrients	78
Table III-8	Tertiary Waste Treatment Applications	81
Table III-9	Cost Summary: Filtration	85
Table III-10	Cost Summary: Chlorination System	92
Table IV-1	Land Treatment and Disposal Processes	95
Table IV-2	Maximum Hydraulic Loadings	99
Table IV-3	BOD Loading Rates	100
Table IV-4	Maximum Limits of Inorganics	104
Table IV-5	Cost Summary: Land Disposal	106
Table V-1	Solid Waste Produced in Food Processing	108
Table V-2	Treatment Plant Solids Characteristics	111
Table V-3	Solids Handling Options	115
Table V-4	Solids Handling Design Criteria	118
Table V-5	Cost Ranges of Solids Hauling and Disposal	132

Chapter I
BACKGROUND

By their nature, canneries cause special problems that are not evident in other industries. The largest problem is the seasonal variation of cannery wastes. Each raw product has a harvest season that varies slightly from year to year. The quality of raw products also varies, not only from year to year, but from field to field, and from beginning to end of harvest. Those canneries which have their own full treatment system are acutely aware of these variations.

No two processing plants are identical. Even plants operated by the same corporation and producing the same product can have very different wastewater characteristics. Therefore, wastewater quality data must be developed for each plant. This creates a problem for new plants, or for expansions of existing plants. For these instances, waste quantities are estimated by assuming them to be proportional (on the basis of production capacity) to the waste from other similar plants. In determining future waste loads, expansion or product changes must be considered.

IMPORTANT WASTE CHARACTERISTICS

Scientists and engineers have developed many tests to quantify the pollution producing capacity of wastes. The significant tests are defined in Technical Session A. Many measurements can be taken, but they will only be useful in certain cases. Common measurements that are taken are briefly described below:

- Biochemical oxygen demand (BOD)

  BOD must be known to size aerators in activated sludge treatment plants, or to determine sewer service charges when an industry is discharging to a public treatment system. A seed acclimated to the waste must be used in the BOD tests. Otherwise, the test may yield a false low value.

- Chemical oxygen demand (COD)

  COD can be used as a fast way to estimate the BOD for most food processing waste by empirically determining a ratio of BOD to COD. A few cities use COD to assess sewer service charges.

- Total suspended solids (TSS)

  TSS is also one factor often used to determine sewer service charges. TSS is also needed to determine the probable volume of waste solids from a treatment system.

- Volatile suspended solids (VSS)

  Volatile (as compared with total) suspended solids are needed to determine the volume of waste solids which may be biodegraded.

- Nutrients

  A balance of nitrogen and phosphorus is needed for successful biological treatment. In unusual cases, other trace elements may also be critical nutrients. Many food processing wastewaters are deficient in nutrients, so adding nutrients is often necessary. In a joint treatment system in a city, where cannery waste is mixed with domestic waste, the balance may be met by nutrients naturally present in domestic sewage, but it should still be checked.

- pH

  Local sewer ordinances almost always limit the allowable range of pH. Extreme values or wide fluctuations of pH may require pretreatment before full treatment.

- Alkalinity and acidity

  Alkalinity and acidity must be measured to determine the resistance of the wastewater to pH changes, to design neutralization systems, or to determine the stability of biological treatment.

- Temperature

  Wastewater temperatures are extremely important in determining the feasibility of biological treatment. Process stability, even in physical-chemical systems, can be adversely affected by wide ranges in temperature.

- Toxicity

  Most waste discharge requirements have limits on toxicity. In extreme cases, high toxicity may make biological treatment impractical, depending on bacterial growth. The most common causes of wastewater toxicity are excessive amounts of free ammonia, residual chlorine from disinfection, discharges of detergents (from cleanup) or other toxic materials like paint and solvents.

Whether a cannery intends to discharge to a municipal treatment system, build its own treatment system, or dispose of the waste on land, different waste characteristics must be tested. Table I-1 shows the factors which must be measured for each of the three waste handling options.

Table I-1

IMPORTANCE OF WASTEWATER CHARACTERISTICS

Characteristics	Discharge to Sewer*	Discharge to Own Treatment Plant	Discharge to Land
Flow	x	x	x
pH	x	x	x
Temperature		x	
Dissolved Oxygen			
BOD	x	x	x
COD (use as a check or guide for BOD)	x	x	x
Total Suspended Solids	x	x	x
Volatile Suspended Solids		x	x
Fixed Suspended Solids		x	x
Total Dissolved Solids			x
Nitrogen		x	x
Phosphorus		x	x
Settleable Solids	x	x	x
Specific Ions**			x

*These analyses are determined by the City's sewer use ordinance. Typical requirements are shown.

**See Table IV-4.

An Environmental Protection Agency publication, "Monitoring of Industrial Wastewater," gives additional information on the practicalities of waste characterization, as well as methods of sampling and analyses.

Sampling, Testing, and Flow Measurement

Selecting a laboratory for testing samples is important. Many states require that data submitted to regulatory agencies be analyzed at a state certified or approved laboratory. The expense of building, staffing, and maintaining such a laboratory can be costly and can dictate use of an outside contract laboratory for most wastewater testing.

A good program of sampling, testing, and flow measurement is important. It provides basic information to select treatment processes, to determine sewer service charges, and to compare the economics of in-plant waste reduction verses "end of pipe" treatment.

Perhaps the single most important wastewater characteristic is flow. Flow rate determines the hydraulic capacity needed for a treatment facility. Several wastewater flow factors must be known for efficient treatment design: (1) average flow, (2) maximum instantaneous flow, (3) peak daily flow, and (4) peak weekly flow.

Selection of a point and method of measuring flow is also important. Factors to consider are:

- Reliability of automatic, flow-measurement equipment
- Nonclogging characteristics
- Accuracy required
- Maintenance required
- Costs
- Accessibility of the flow-measurement station

Obtaining valid data on waste characteristics requires careful selection of sampling points. For example, a large sewer can have variations in waste strength, from the top of the liquid flowing in the pipe to the bottom of the pipe, because different constituents may differ in weight. Therefore, samples from the surface of a gravity sewer flowing full can give misleading results. Sampling points should be selected where there is no stratification or incomplete mixing of several waste sources.

Significant variations in production schedule should also be accounted for as they affect the waste load. Samples must be taken during each operating shift, and during different stages of the finished or raw product runs. Flows should be monitored continuously, even during cleanup shifts and on weekends.

The amount of testing required varies according to the cannery operation and the purposeoof testing. For maximum accuracy, the waste for a single product should be tested in two two-week sampling periods. The first two-week period should be during the first half of the processing season. The second period should be scheduled for the latter half of the season.

The flows for these two-week periods should be measured and recorded continuously. Samples should be taken hourly for each day (24 hours) and composited according to flow. The actual time that the samples are taken should be varied to increase the possibility of recording and testing events that happen between sampling times.

Seasonal operation further complicates treatment plant design. In addition to the requirements of annual startup and shutdown of treatment facilities, there are changes throughout a processing season for most

of the wastewater characteristics resulting from changes in the crop being processed, process changes, etc.

Seasonal operations often affect the type of disposal to be considered. Processing plant wastewater can be used for irrigation, but it is impractical if the waste flows are generated at a time when farmers do not need irrigation or the climate is unsuitable.

TYPICAL WASTEWATER CHARACTERISTICS

Following is a table (Table I-2) summarizing typical wastewater characteristics for many fruits and vegetables.

While no plant should expect to conform completely with the values shown, these typical characteristics can be useful in evaluating whether a plant is high or low in waste strength. Also, they can assist laboratory personnel in analyzing wastewater samples.

The characteristics in the table are given in unit loadings, such as thousand gallons (or pounds) per ton of raw product. Typical concentrations (mg/l) for BOD and suspended solids can be calculated from the relationships:

$$\text{concentration (mg/l)} = \frac{\text{mass (lb/d)}}{\text{flow (million gal/day)} \times 8.34}$$

or,

$$\text{concentration (mg/l)} = \frac{\text{mass (lb/ton)} \times 120}{\text{flow (1000 gal/ton)}}$$

Table I-2

TYPICAL RAW WASTEWATER CHARACTERISTICS

Canned and Preserved Fruits and Vegetables

	Flow			BOD			TSS		
	1,000 gal/ton raw product			lb/ton raw product			lb/ton raw product		
	Min.	Mean	Max.	Min.	Mean	Max.	Min.	Mean	Max.
Apples	0.2	2.4	13	3.9	18	44	0.4	4.5	21
Apricots	2.5	5.6	14	18	40	80	5	9.9	19
Asparagus	1.9	8.5	29	0.9	4.9	22	4.3	7.5	13
Dry Beans	2.5	8.8	33	15	60	182	2.6	43	99
Lima Beans	2.4	7.7	22	9.3	48	175	4.6	39	231
Snap Beans	1.3	4.2	11.2	1.6	15	81	0.8	6.1	46
Beets	0.3	2.7	6.7	28	53	127	7.3	22	64
Broccoli	4.1	9.2	21	5.8	20	61	4.6	17	61
Brussels Sprouts	5.7	8.2	12	4.2	7.5	14	2.9	15	79
Berries	1.8	3.5	9.1	11	19	40	1.4	7.1	22
Carrots	1.2	3.3	7.1	17	30	53	4.5	17	53
Cauliflower	12	17	24	5.5	16	36	2.8	7.8	22
Cherries	1.2	3.9	14	21	38	78	1.0	2.0	3.8
Citrus	0.3	3.0	9.3	0.9	9.6	26	0.7	3.7	14

	Flow			BOD			TSS		
	1,000 gal/ton raw product			lb/ton raw product			lb/ton raw product		
	min.	mean	Max.	Min.	Mean	Max.	Min.	Mean	Max.
Corn	0.4	1.8	7.6	12	27	64	3.6	10	27
Grapes	0.6	1.5	5.1	6.4	9.0	13	1.5	1.7	2.0
Mushrooms	1.8	7.8	28	7.7	15	28	5.1	7.3	12
Olives	--	8.1	--	--	27	--	--	27	--
Onions	2.5	5.5	10	57	57	58	5.3	17	55
Peaches	1.4	3.0	6.3	17	35	70	3.4	8.6	21
Pears	1.6	3.6	7.7	19	50	126	3.6	12	33
Peas	1.9	5.4	14	16	38	87	3.8	11	38
Peppers	0.9	4.6	16	5	32	50	1	58	170
Pickles	1.4	3.5	11	26	42	75	3.0	8.2	23
Pimentos	5.8	6.9	8.2	39	55	76	4.1	5.8	8.1
Pineapples	2.6	2.7	3.8	13	25	45	5.2	9.1	17
Plums	0.6	2.3	8.7	6.5	10	14	0.6	2.1	4.3
Potato Chips	1.2	1.6	2.2	17	25	38	22	32	48
Potatoes, Sweet	0.4	2.2	9.7	39	93	217	40	57	117
Potatoes, White	1.9	3.6	6.6	42	84	167	39	128	423
Pumpkin	0.4	2.9	11	9.2	32	87	2	67	12
Sauerkraut	0.5	0.9	3.0	4.6	5.6	15	--	1.0	2.6

	Flow			BOD			TSS		
	1,000 gal/ton raw product			lb/ton raw product			lb/ton raw product		
	Min.	Mean	Max.	Min.	Mean	Max.	Min.	Mean	Max.
Spinach	3.2	8.8	23	5.7	14	31	1.8	6.1	21
Squash	1.1	6.0	22	--	20	--	--	14	--
Tomatoes, Peeled	1.3	2.2	3.7	6.3	9.3	14	5.8	12	26
Tomatoes, Product	1.1	1.6	2.4	2.2	4.7	9.7	5.6	10	19
Turnips	2.4	7.3	18	--	--	--	--	--	--

Sources: EPA Guidelines Development Document

National Canners Association Data

Changes in Waste Strength

Many factors cause changes in waste strength, as shown in Table I-3. One significant factor is a change in the product being processed. The raw product itself can change in quality throughout a season. For a variety of reasons, each year's crop is not exactly the same as other years'. Also, the different ways a raw product is handled and the length of haul can greatly change waste strength.

Changes in the final product or the commodity being handled, (canned pears to fruit cocktail, tomato paste to whole canned tomatoes, peas to corn, etc.) will have significant impacts on waste characteristics and treatability.

Length of season also affects the wastewater. If a crop is harvested over a long period of time, the wastewater quality and quantity may differ markedly from beginning to end of the season.

Changes in waste strength can also occur from shift to shift. For example, waste flows during the cleanup shift will be different than those from a processing shift.

Daily or seasonal shutdown and startup of a processing plant can cause problems at a treatment plant. Biological treatment systems depend on a regular supply of a given source of food (BOD). If the food supply changes greatly, the biological process may not be able to adjust with the change. Thus, frequent shutdown and startup must be carefully considered in design of treatment processes.

Technical Session A, on in-plant control of wastewater, has a good discussion of the quantitative effect of these factors on waste character.

Table I-3

FACTORS CONTRIBUTING TO RAW WASTE LOAD VARIABILITIES

Raw Product Condition (Ripeness, Damage)

Raw Product Mix

Finished Product Mix

Finished Product Style

Product Conveying Systems (Countercurrent vs. Single Pass Fluming, Dry Conveying, Pneumatic Conveying)

Process Methods (Blanching, Peeling)

Timing of In-Plant Individual Process Runs

Daily Shift Organization

Cleanup Methods (Dry vs. Wet, Detergent, Disinfection Used)

Batch Dump Frequency (Brine, Caustic)

Frequency, Duration of Shutdowns

EFFLUENT REQUIREMENTS

In the discharge of wastewater, a cannery is concerned with the requirements of one or more governmental agencies: (1) Federal, (2) state, and (3) local requirements. Requirements for each of these have been discussed in earlier sessions; however, our discussion here will give more background regarding these regulations and their effect on a particular cannery.

Federal Requirements

The most significant set of standards are those set by the Environmental Protection Agency. The "Phase I" guidelines are completed, but they only encompass regulations for the apple, potato, and citrus industries. Phase II is nearing completion now so that effluent guidelines will soon be established for all canned fruits and vegetables. The latest draft guidelines (October 1975) are given in Table I-4. These are being reviewed now by EPA and quite possibly will be modified before the requirements are finalized.

The guidelines affect the following parameters:

- BOD
- Total Suspended Solids (TSS)
- Grease and Oil
- pH
- Fecal Coliform Count

Table I-4 gives the allowable mass emissions of BOD and TSS for all fruit and vegetable processors. Effluent pH is limited between 6 and 9.5 for both 1977 and 1983 for all except the apple, citrus, and potato

Table I-4
EFFLUENT LIMITATION GUIDELINES
(POUNDS ALLOWED PER TON RAW PRODUCT)

	1977							1983					
	Daily Max		30-Day Avg		Seasonal Avg			Daily Max		30-Day Avg		Seasonal Avg	
							S	---	---	---	---	---	---
Added Ingredients*	3.92	---	2.52	---	1.60	---	M	5.428	---	3.418	---	1.600	---
							L	5.428	---	3.418	---	1.600	---
Apple Juice	1.20	1.60	0.60	0.80	---	---		0.40	0.40	0.20	0.20	---	---
Apple Products (except juice)	2.20	2.80	1.10	1.40	---	---		0.40	0.40	0.20	0.20	---	---
							S	---	---	---	---	---	---
Apricots	5.96	9.36	3.88	6.70	2.52	5.20	M	1.954	3.856	1.238	2.189	0.600	1.244
							L	1.954	1.954	1.238	1.238	0.600	0.600
							S	---	---	---	---	---	---
Asparagus	1.70	2.52	1.10	1.70	0.68	1.46	M	0.560	1.004	0.326	0.420	0.140	0.326
							L	0.560	0.560	0.326	0.326	0.140	0.140
							S	---	---	---	---	---	---
Baby Food*	2.00	3.12	1.30	2.22	0.84	1.74	M	0.848	1.636	0.534	0.888	0.250	0.528
							L	0.848	0.848	0.534	0.534	0.250	0.250
							S	---	---	---	---	---	---
Beets	1.62	3.10	1.08	2.54	0.78	1.48	M	0.750	1.838	0.500	1.438	0.206	0.582
							L	0.750	0.750	0.500	0.500	0.206	0.206

*lb/ton final product
**lb/ton raw ingredients

Table I-4
EFFLUENT LIMITATION GUIDELINES

Commodity	1977 Daily Max BOD	1977 Daily Max TSS	1977 30-Day Avg BOD	1977 30-Day Avg TSS	1977 Seasonal Avg BOD	1977 Seasonal Avg TSS		1983 Daily Max BOD	1983 Daily Max TSS	1983 30-Day Avg BOD	1983 30-Day Avg TSS	1983 Seasonal Avg BOD	1983 Seasonal Avg TSS
							S	---	---	---	---	---	---
Broccoli	7.22	10.74	2.68	7.30	2.94	6.24	M	3.278	5.930	2.040	2.774	0.862	1.926
							L	3.278	3.278	2.040	2.040	0.862	0.862
							S	---	---	---	---	---	---
Brussel Sprouts	2.50	3.70	1.62	2.52	1.02	2.16	M	3.314	5.886	2.054	2.618	0.840	1.916
							L	3.314	3.314	2.054	2.054	0.840	0.840
							S	---	---	---	---	---	---
Caneberries	1.56	2.42	1.02	1.70	0.66	1.36	M	0.434	0.83	0.274	0.442	0.126	0.268
							L	0.434	0.434	0.274	0.274	0.126	0.126
							S	---	---	---	---	---	---
Carrots	3.46	5.82	2.28	4.38	1.52	3.06	M	1.620	3.330	1.036	2.036	0.532	1.070
							L	1.620	1.620	1.036	1.036	0.532	0.532
							S	---	---	---	---	---	---
Cauliflower*	3.96	5.86	2.56	3.98	1.62	3.40	M	4.712	8.348	2.920	3.704	1.194	2.714
							L	4.712	4.712	2.920	2.920	1.194	1.194
							S	---	---	---	---	---	---
Cherries (sweet)	2.18	3.56	1.42	2.64	0.94	1.92	M	0.740	1.516	0.474	0.920	0.242	0.488
							L	0.740	0.740	0.474	0.474	0.242	0.242
							S	---	---	---	---	---	---
Cherries (sour)	3.40	5.62	2.18	4.22	0.58	3.00	M	1.714	3.372	1.084	1.904	0.522	1.088
							L	1.714	1.714	1.084	1.084	0.522	0.522

*lb/ton final product
**lb/ton raw ingredients

Table I-4
EFFLUENT LIMITATION GUIDELINES

Commodity	1977 Daily Max BOD	1977 Daily Max TSS	1977 30-Day Avg BOD	1977 30-Day Avg TSS	1977 Seasonal Avg BOD	1977 Seasonal Avg TSS		1983 Daily Max BOD	1983 Daily Max TSS	1983 30-Day Avg BOD	1983 30-Day Avg TSS	1983 Seasonal Avg BOD	1983 Seasonal Avg TSS
							S	---	---	---	---	---	---
Cherries (brined)	5.54	8.96	3.62	6.58	2.38	4.86	M	1.142	2.656	0.752	1.948	0.458	0.846
							L	1.142	1.142	0.752	0.752	0.458	0.458
							S	---	---	---	---	---	---
Chips (potato)*	6.70	11.20	4.38	8.44	2.94	5.92	M	2.808	5.568	1.784	3.192	0.872	1.792
							L	2.808	2.808	1.784	1.784	0.872	0.872
							S	---	---	---	---	---	---
Chips (corn)*	3.68	6.68	2.44	5.34	1.70	3.32	M	2.062	5.038	1.324	2.724	0.700	1.386
							L	2.062	2.062	1.324	1.324	0.700	0.700
							S	---	---	---	---	---	---
Chips (tortilla)*	5.76	9.58	3.78	7.18	2.52	5.08	M	3.196	6.238	2.020	3.466	0.962	2.014
							L	3.196	3.196	2.020	2.020	0.962	0.962
Citrus	1,60	2.40	0.80	1.70	---	---		0.28	0.40	0.14	0.20	---	---
							S	---	---	---	---	---	---
Corn (canned)	1.40	2.56	0.92	2.06	0.62	1.26	M	0.358	0.830	0.236	0.410	0.144	0.264
							L	0.358	0.358	0.236	0.236	0.144	0.144
							S	---	---	---	---	---	---
Corn (frozen)	3.98	6.32	2.48	4.74	1.66	3.34	M	1.786	3.438	1.126	1.856	0.524	1.110
							L	1.786	1.786	1.126	1.126	0.524	0.524
							S	---	---	---	---	---	---
Cranberries	3.36	5.34	2.18	3.82	1.42	2.94	M	1.034	2.088	0.660	1.236	0.330	0.672
							L	1.034	1.034	0.660	0.660	0.330	0.330

*lb/ton final product
**lb/ton raw ingredients

Table I-4
EFFLUENT LIMITATION GUIDELINES

Commodity	1977 Daily Max BOD	1977 Daily Max TSS	1977 30-Day Avg BOD	1977 30-Day Avg TSS	1977 Seasonal Avg BOD	1977 Seasonal Avg TSS		1983 Daily Max BOD	1983 Daily Max TSS	1983 30-Day Avg BOD	1983 30-Day Avg TSS	1983 Seasonal Avg BOD	1983 Seasonal Avg TSS
							S	---	---	---	---	---	---
Dehydrated Onion/Garlic	4.80	7.12	3.10	4.84	1.96	4.14	M	1.894	3.512	1.184	1.748	0.522	1.140
							L	1.894	1.894	1.184	1.184	0.522	0.522
							S	---	---	---	---	---	---
Dehydrated Vegetables	5.82	8.64	3.76	5.86	2.38	5.02	M	2.930	5.410	1.830	2.662	0.800	1.754
							L	2.930	2.930	1.830	1.830	0.800	0.800
							S	---	---	---	---	---	---
Dried Fruit	3.66	5.84	2.38	4.24	1.56	3.20	M	1.078	2.244	0.692	1.402	0.406	0.720
							L	1.078	1.078	0.692	0.692	0.406	0.406
							S	---	---	---	---	---	---
Dry Beans	4.92	7.84	3.20	5.66	2.10	4.30	M	2.386	4.456	1.494	2.252	0.664	1.444
							L	2.386	2.386	1.494	1.494	0.664	0.664
							S	---	---	---	---	---	---
Ethnic Foods*	3.48	5.40	2.26	3.82	1.46	3.02	M	1.394	2.652	0.876	1.396	0.400	0.856
							L	1.394	1.394	0.876	0.876	0.400	0.400
							S	---	---	---	---	---	---
Grape Juice (canning)	2.04	3.40	1.34	2.56	0.90	1.82	M	0.938	1.836	0.602	0.992	0.280	0.594
							L	0.938	0.938	0.602	0.602	0.280	0.280
							S	---	---	---	---	---	---
Grape Juice (pressing)	0.44	0.72	0.28	0.56	0.18	0.38	M	0.178	0.350	0.112	0.198	0.054	0.112
							L	0.178	0.178	0.112	0.112	0.054	0.054

*lb/final product

Table I-4
EFFLUENT LIMITATION GUIDELINES

Commodity	1977 Daily Max BOD	1977 Daily Max TSS	1977 30-Day Avg BOD	1977 30-Day Avg TSS	1977 Seasonal Avg BOD	1977 Seasonal Avg TSS		1983 Daily Max BOD	1983 Daily Max TSS	1983 30-Day Avg BOD	1983 30-Day Avg TSS	1983 Seasonal Avg BOD	1983 Seasonal Avg TSS
							S	---	---	---	---	---	---
Jams/Jellies *	0.78	1.36	0.52	1.06	0.34	0.70	M	0.372	0.808	0.240	0.540	0.134	0.258
							L	0.372	0.372	0.240	0.240	0.134	0.134
							S	---	---	---	---	---	---
Lima Beans	7.28	11.28	4.72	7.98	3.04	6.34	M	2.914	5.362	1.818	2.616	0.790	1.738
							L	2.914	2.914	1.818	1.818	0.790	0.790
							S	---	---	---	---	---	---
Mayonnaise and Dressings*	0.68	1.20	0.46	0.94	0.30	0.62	M	0.402	0.864	0.260	0.568	0.142	0.276
							L	0.402	0.402	0.260	0.260	0.142	0.142
							S	---	---	---	---	---	---
Mushrooms	5.98	9.18	3.88	6.42	2.48	5.18	M	2.000	3.744	1.254	1.900	0.560	1.212
							L	2.000	2.000	1.254	1.254	0.560	0.560
							S	---	---	---	---	---	---
Olives	10.62	17.28	6.94	12.72	4.58	9.34	M	3.652	7.128	2.308	3.960	1.098	2.298
							L	3.652	3.652	2.308	2.308	1.098	1.098
							S	---	---	---	---	---	---
Onions (canned)	6.34	10.18	4.14	7.42	2.70	5.56	M	2.794	5.666	1.782	3.384	0.898	1.822
							L	2.794	2.794	1.782	1.782	0.898	0.898
							S	---	---	---	---	---	---
Peaches (canned)	3.62	5.86	2.36	4.30	1.56	3.18	M	1.612	3.154	1.020	1.760	0.488	1.018
							L	1.612	1.612	1.020	1.020	0.488	0.488

*lb/ton final product
**lb/ton raw ingredients

Table I-4
EFFLUENT LIMITATION GUIDELINES

Commodity	1977 Daily Max BOD	1977 Daily Max TSS	1977 30-Day Avg BOD	1977 30-Day Avg TSS	1977 Seasonal Avg BOD	1977 Seasonal Avg TSS		1983 Daily Max BOD	1983 Daily Max TSS	1983 30-Day Avg BOD	1983 30-Day Avg TSS	1983 Seasonal Avg BOD	1983 Seasonal Avg TSS
							S	---	---	---	---	---	---
Peaches (frozen)	1.60	2.76	1.04	2.14	0.72	1.42	M	0.554	1.126	0.514	0.626	0.282	0.548
							L	0.554	0.554	0.514	0.514	0.282	0.282
							S	---	---	---	---	---	---
Pears	3.42	5.80	2.24	4.42	1.50	3.04	M	1.182	2.418	0.746	1.510	0.390	0.776
							L	1.182	1.182	0.746	0.746	0.390	0.390
							S	---	---	---	---	---	---
Peas (canned)	5.48	8.88	3.58	6.52	2.36	4.80	M	2.044	4.222	1.308	2.606	0.678	1.356
							L	2.044	2.044	1.308	1.308	0.678	0.678
							S	---	---	---	---	---	---
Peas (frozen)	4.06	6.66	2.66	4.94	1.76	3.58	M	1.714	3.340	1.084	1.850	0.514	1.078
							L	1.714	1.714	1.084	1.084	0.514	0.514
							S	---	---	---	---	---	---
Pickles (fresh pack)	2.38	3.86	1.56	2.82	1.02	2.08	M	1.160	2.144	0.724	1.060	0.318	0.696
							L	1.160	1.160	0.724	0.724	0.318	0.318
							S	---	---	---	---	---	---
Pickles (process pack)	2.78	4.76	1.82	3.64	1.24	2.48	M	1.016	2.056	0.646	1.226	0.326	0.662
							L	1.016	1.016	0.646	0.646	0.326	0.326
							S	---	---	---	---	---	---
Pickles (salt stations)	0.40	0.86	0.28	0.76	0.20	0.38	M	0	0	0	0	0	0
							L	0	0	0	0	0	0

Table I-4
EFFLUENT LIMITATION GUIDELINES

Commodity	1977 Daily Max BOD	1977 Daily Max TSS	1977 30-Day Avg BOD	1977 30-Day Avg TSS	1977 Seasonal Avg BOD	1977 Seasonal Avg TSS		1983 Daily Max BOD	1983 Daily Max TSS	1983 30-Day Avg BOD	1983 30-Day Avg TSS	1983 Seasonal Avg BOD	1983 Seasonal Avg TSS
							S	---	---	---	---	---	---
Pimentos	7.94	12.70	5.16	9.24	3.38	6.94	M	4.008	7.672	2.502	4.188	1.172	2.478
							L	4.008	4.008	2.502	2.502	1.172	1.172
							S	-	---	---	---	---	
Pineapples	3.56	5.64	2.32	4.06	1.50	3.12	M	1.760	3.380	1.108	1.814	0.514	1.092
							L	1.760	1.760	1.108	1.108	0.514	0.514
							S	---	---	---	---	---	---
Plums	1.36	2.14	0.88	1.56	0.58	1.18	M	0.466	0.874	0.292	0.448	0.132	0.284
							L	0.466	0.466	0.292	0.292	0.132	0.132
Potatoes (dehydrated)	4.80	5.60	2.40	2.80	---	---		0.68	2.20	0.34	1.10	---	---
Potatoes (frozen)	5.60	5.60	2.80	2.80	---	---		0.68	2.20	0.34	1.10	---	---
							S	---	---	---	---	---	---
Raisins	0.82	1.44	0.54	1.10	0.36	0.74	M	0.330	0.766	0.218	0.562	0.132	0.244
							L	0.330	0.330	0.218	0.218	0.132	0.132
							S	---	---	---	---	---	---
Sauerkraut (canning)	0.98	1.56	0.64	1.14	0.42	0.86	M	0.450	0.900	0.286	0.526	0.142	0.290
							L	0.450	0.450	0.286	0.286	0.142	0.142

Table I-4
EFFLUENT LIMITATION GUIDELINES

Commodity	1977 Daily Max BOD	1977 Daily Max TSS	1977 30-Day Avg BOD	1977 30-Day Avg TSS	1977 Seasonal Avg BOD	1977 Seasonal Avg TSS		1983 Daily Max BOD	1983 Daily Max TSS	1983 30-Day Avg BOD	1983 30-Day Avg TSS	1983 Seasonal Avg BOD	1983 Seasonal Avg TSS
							S	---	---	---	---	---	---
Sauerkraut (cutting)	0.14	0.24	0.08	0.20	0.06	0.12	M	0.054	0.114	0.034	0.074	0.018	0.036
							L	0.054	0.054	0.034	0.017	0.018	0.018
							S	---	---	-	---	---	
Snap Beans (canned)	2.32	3.46	1.50	2.34	0.94	2.00	M	1.582	2.850	0.984	1.320	0.412	0.926
							L	1.582	1.582	0.984	0.984	0.412	0.412
							S	---	---	---	---	---	---
Snap Beans (frozen)	4.24	6.50	2.74	4.54	1.76	3.68	M	2.132	3.960	1.334	1.978	0.588	1.284
							L	2.132	2.132	1.334	1.334	0.588	0.588
							S	---	---	---	---	---	---
Soups**	8.30	12.68	5.32	8.94	3.42	7.12	M	4.584	8.576	2.872	4.350	1.280	2.778
							L	4.584	4.584	2.872	2.872	1.280	1.280
							S	---	---	---	---	---	---
Spinach (canned)	6.04	8:98	3.90	6.10	2.46	5.20	M	1.704	3.134	1.064	1.520	0.462	1.016
							L	1.704	1.704	1.064	1.064	0.462	0.462
							S	---	---	---	---	---	---
Spinach (frozen)	3.54	5.24	2.28	3.56	1.44	3.04	M	2.074	3.752	1.290	1.754	0.544	1.218
							L	2.074	2.074	1.290	1.290	0.544	0.544
							S	---	---	---	---	---	---
Squash	1.72	3.14	1.14	2.50	0.80	1.56	M	0.502	1.010	0.320	0.594	0.158	0.324
							L	0.502	0.502	0.320	0.320	0.158	0.158

*lb/ton final product
**lb/ton raw ingredients

Table I-4
EFFLUENT LIMITATION GUIDELINES

Commodity	1977 Daily Max BOD	1977 Daily Max TSS	1977 30-Day Avg BOD	1977 30-Day Avg TSS	1977 Seasonal Avg BOD	1977 Seasonal Avg TSS		1983 Daily Max BOD	1983 Daily Max TSS	1983 30-Day Avg BOD	1983 30-Day Avg TSS	1983 Seasonal Avg BOD	1983 Seasonal Avg TSS
							S	---	---	---	---	---	---
Strawberries	3.50	5.38	2.26	3.76	1.46	3.04	M	1.052	1.992	0.660	1.038	0.300	0.644
							L	1.052	1.052	0.660	0.660	0.300	0.300
							S	---	---	---	---	---	---
Sweet Potato	1.56	3.34	1.06	2.96	0.80	1.48	M	0.768	2.026	0.522	1.712	0.372	0.640
							L	0.768	0.768	0.522	0.522	0.372	0.372
							S	---	---	---	---	---	---
Tomatoes (peeled)	2.40	3.70	1.56	2.60	1.00	2.08	M	0.750	1.424	0.472	0.746	0.216	0.460
							L	0.750	0.750	0.472	0.472	0.216	0.216
							S	---	---	---	---	---	---
Tomatoes (products)	0.96	1.42	0.62	0.96	0.38	0.82	M	0.562	1.028	0.350	0.494	0.150	0.334
							L	0.562	0.562	0.350	0.350	0.150	0.150
							S	---	---	---	---	---	---
Tomato-Starch -Cheese Specialties*	3.54	5.24	2.28	3.56	1.44	3.04	M	1.456	2.678	0.908	1.308	0.394	0.868
							L	1.456	1.456	0.908	0.908	0.394	0.394
							S	---	---	---	---	---	---
White Potatoes (canned)	2.60	4.68	1.72	3.86	1.20	2.36	M	0.770	1.962	0.520	1.598	0.354	0.620
							L	0.770	0.770	0.520	0.520	0.354	0.354

*lb/ton final product
**lb/ton raw ingredients

processing industries. For these latter three, effluent pH limits are between 6 and 9. All industries must disinfect by 1983 to meet an allowable fecal coliform count of 400 per 100 ml.

A draft oil and grease limitation of 20 mg/l has been set for the "specialties" category only. This limit is identical for both 1977 and 1983. Those "specialties" industries affected are:

- Added Ingredients
- Baby Foods
- Chips (potato, corn, tortilla)
- Ethnic Foods
- Jams/Jellies
- Mayonnaise and Dressings
- Soups
- Tomato-Starch-Cheese Canned Specialties

No other industries have oil and grease limitations.

The draft guidelines for 1983 have been divided according to size of plant--small, medium, or large (S, M, or L in Table I-4). "Small" is defined as a plant that processes less than 2,000 tons of raw material per year. "Medium" is between 2,000 tons and 10,000 tons per year. "Large" is greater than 10,000 tons per year.

To understand the guidelines, one must realize that they are based on what is <u>attainable</u>; not necessarily on what is required to protect water quality. For 1977, the effluent standards are based on what is defined as the "Best Practicable Control Technology Currently Available (BPCTA)." By 1983, the effluents are to conform to limits that

are the "Best Available Technology Economically Achievable (BATEA)." These are both set by EPA through research by outside consultants for the industries concerned. (6,7).

Although the EPA guidelines are written for waste discharge into receiving waters, they also effect processors discharging into a municipal sewer. The law requires that all industries meet the guidelines. Canners discharging to a sewer meet their treatment obligations through the use of the joint city-industry treatment plant operated by the city. If the city's treatment plant does not adequately treat your waste, it is possible that you may be forced to add intermediate treatment facilities to make up the difference.

State Requirements

For the states that have their own pollution control programs certified by EPA, the EPA guidelines represent the maximum permissible discharge. The standards developed by these states are usually more stringent than the EPA requirements. These state's standards have been set to meet strict water quality goals for receiving streams or special local pollution problems.

Local Requirements

Local requirements are primarily in the form of sewer ordinances which apply to sewer users. Ordinances are written with two goals in mind. The first goal, which was the original impetus to the ordinances, is to prevent blockages of the collection system, hazards to workers in the sewers and at the treatment plant, or interferences with the treatment process. In addition, ordinances set the basis for

sewer user charges and limit specific waste characteristics such as pH and grease.

Thus, most local agencies have, or are developing, extensive charge systems and restrictive sewer use ordinances. The effect of these ordinances will be explored in the section on pretreatment.

The current EPA grant program, as well as several state programs, requires that a swereage agency establish a comprehensive sewer ordinance which includes restrictions on the use of the sewer system and treatment plant, limits waste characteristics, and established an equitable system for establishing sewer user charges.

COST INFORMATION AND OTHER DATA

Where not otherwise noted, the cost information and other data presented in the remaining Chapters are taken from CH_2M HILL internal sources. A numbered list of references is attached to the end of the report.

Costs are for October 1975 and assume competitive bids by outside contractors. The estimates are "order of magnitude" estimates, which means that the final cost, adjusted for inflation, may be from 0 percent lower to 50 percent higher. It was assumed that no significant site grading would be required and that good soil conditions existed. No costs were included for site acquisition or for separate fencing, yard lighting, access roads, and laboratories. Other initial assumptions for each example are either listed on the tables themselves or given in the text.

Generalized cost curves are also given in the two EPA effluent guideline development documents for the fruit and vegetable industries.

Chapter II
PRETREATMENT

BACKGROUND

Most canneries discharging to a city sewer system use some method of pretreatment. Pretreatment may be thought of as treatment processes used to remove gross solids: trash, vines, pits, skins, or soil, or a process to control or even out variations in pH or flow. Common pretreatment steps are screening, neutralization, or flow equalization; but sometimes more extensive treatment is needed like gravity sedimentation or dissolved air flotation.

There may be any one or more of four different reasons for employing pretreatment:

- Ordinance Requirements
- Cost
- Production Increases
- By-product Recovery

Ordinance Requirements

Pretreatment is often required by city ordinance. In cases like these, screening is almost always a requirement, but other processes, like pH control, may be required.

Some cities require the removal of inert materials (sand or clay). This requirement affects canneries processing tomatoes, carrots, potatoes, or any other root crops. Although rare, a city can also require neutralization, or reduction of flow surges.

Economic Considerations

The other three reasons for pretreatment come from considerations of the economics of disposal. These include: (1) attempts to reduce city sewer fees, (2) reduction of existing waste loads to allow production increase or cannery expansion, and (3) recovery of by-products for sale.

Despite the apparent high rates charged by some cities for using their sewers, it is often difficult to economically justify treatment for sewer charge reduction. The main reason for this lack of economy is the high cost of solids disposal and the high unit cost (cents/1000 gallons) of building and operating small treatment plants, when compared to the unit cost of a significantly larger municipal treatment plant. For example, city sewer charges now are typically in the range of $0.20 to $1.00 per 1000 gallons. Because of the high cost of industrial capital, the short processing season and other factors, the unit charge for treatment by canners alone is considerably higher. The cast summary tables in this and the other chapters show unit costs from $0.18 per 1000 gallons for screening to $3.21 per 1000 gallons for activated sludge. Because of the federal grant program regulations, industries participating in joint treatment essentially receive a thirty-year interest-free loan for their share of the joint treatment facilities.

Production Increases

Extensive pretreatment can be required as a result of plant expansions. Canneries discharging to public systems frequently reach their allocated capacity of the public treatment plant--and because of production increases, or a plant expansion, need additional treatment capacity--but before the public agency can provide it. Presently the time required to expand a public treatment plant is about 5 years. Overloading the treatment plant creates operating problems for the public agency and may cause bad publicity (or even legal action) for an industry.

Limitations in the construction grants program of the Environmental Protection Agency can result in construction of public treatment facilities with limited expansion capability. For example, the Los Angeles area is designated as a "critical air basin", and only limited expansion is allowed in public treatment plants. If additional plant capacity were provided, additional growth might occur and further degrade air quality. This type of reasoning can create problems for industrial contributors.

Few industries can wait for the public agency to provide additional capacity. One option the industry has is to pretreat the waste so that the cannery's contribution to the public system does not increase, even though the plant has been expanded.

A proposed new cannery, or an existing cannery that wishes to expand its production may not be permitted to do so by the city. However, the cannery can be required to install an extensive pretreatment system so it will not tax the city's plant. This requirement for pretreatment may be so strict that essentially full treatment is required. When this happens, the option of discharging to a city sewer is less attractive.

By-Product Recovery

Presently, recovery of food processing by-products at the end of the pipe is less than a "break-even" proposition. Since the economics do not now favor recovery, it is usually only practical if it is in response to other requirements for pretreatment or to help defray some of the pretreatment operating costs.

For certain products in livestock producing areas, end-of-pipe screenings can be recovered and used in animal (cattle, poultry, hogs) feeding operations. In these cases, the screenings are given away, or the hauler only charges fees for trucking.

In some cases, treatment plant sludge is used for cattle or poultry feed. Ordinarily, these sludges do not have balanced nutrients, so they are not suitable for feeds alone. Supplements must be added to market saleable feed.

Because of possible adulteration, wastes from the end of the pipe cannot be recovered if domestic sewage is mixed with the process waste. This mixing will make the waste by-products unsuitable for use as animal feed. Sanitary waste (domestic waste) should be kept separate from other wastes if any by-product recovery is anticipated.

TECHNOLOGY

Many processes can be used for pretreatment. The processes that are most frequently used, as required by an ordinance, are screens, neutralization systems, flow equalization, and soil removal. For sewer charge savings, or for plant expansions, the processes used can include sedimentation units, dissolved air flotation units, or even biological treatment units (roughing trickling filters, ponds, etc.) These later more complete units are discussed in Chapter III on full treatment.

Screening

Screening is the most common form of pretreatment. Screens are almost always required by city authorities. The purpose of screens is to remove large particles that might otherwise overload and clog sewers or damage treatment plant equipment. Although fine screens (200 to 400 mesh) may be used to remove large amounts of suspended solids, they can also trap large quantities of water to be discharged with the screenings. Common practical screen sizes are 20-40 mesh.

Besides initial cost, a screen is chosen with respect to hydraulic capacity, percent of solids captured, blinding potential, volume of screenings to be disposed, and maintenance requirements.

Four types of screens are commonly used in the fruit and vegetable industry. Currently, the most popular is the vibrating or oscillating screen. Two common variations are the circular center feed one, in which solids may be discharged in a spiral toward the center or periphery, or the rectangular, end-feed variation, in which solids are discharged along the screen toward the lower end.

The next most common is the rotary drum screen. These screens may be designed so that the flow is from the inside of the drum toward the outside, or the reverse. If the flow is from the inside, then the solids are retained in the inside of the screen and removed by augers, wash troughs or gravity. In units where the flow is from the outside to the center, the solids are retained on the outer surface of the drum and are removed by a doctor (or scraper) blade.

Tangential screens (Figure II-1) are becoming more common, especially the parabolic cross section type, where wastewater is fed at the top. The water flows down and through the parabolic screen, but the solids are retained on the surface of the screen and discharged intermittently to a hopper at the lower end of the screen.

Rotating drum centrifugal screens are used when high solids capture is required. The screens are usually of a very fine mesh, up to 400. The water is sprayed under pressure onto the inside of the rotating drum. The water then passes through the screening media and the solids are retained on the inside of the drum. The solids typically have a high moisture content (and hence, high volume); thus they are often sent through successive units (two to six) for concentration.

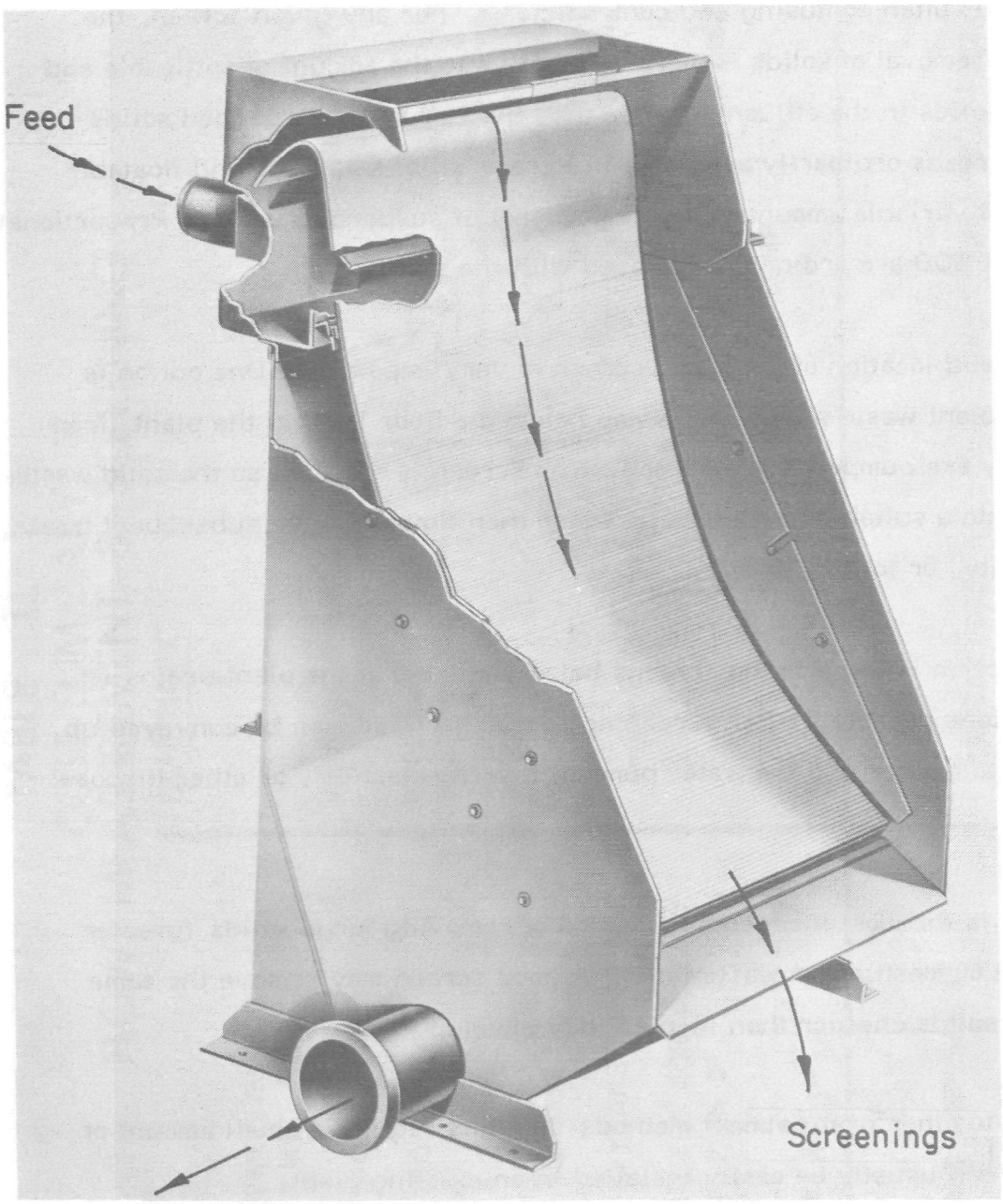

FIG. II-1 TANGENTIAL SCREEN (45°)

(Courtesy of Dorr Oliver)

Successful application of screens depends on many variables. Data from the literature is often confusing and contradictory. For any given screen, the amount of removal of solids is more correlative to the amount of settleable and floatable solids in the effluent, rather than the amount of suspended solids alone. Screens ordinarily achieve a high removal of settleable and floatable solids, but variable amounts (0 to 70 percent) of suspended solids. Proportional amounts of BOD are ordinarily removed with the solids.

Elevation and location of the waste screen is very important. One option is to collect plant waste waters in a sump below the floor level of the plant, from which they are pumped to the screen. The screen is elevated so the solid wastes may fall into a suitable hopper. The water then flows into the subsequent treatment facility, or to the sewer.

Another option is to place the screens below the level of the plant drains (if the elevations permit). After screening, the solid waste can be conveyed up to the waste hopper and the water pumped into the clarifier, or other disposal system.

Screening is the most inexpensive method of removing large solids (greater than about 60 mesh) from wastewater. A good screen may remove the same amount of solids cheaper than in-plant dry cleanup.

Compared to other pretreatment methods, screens require a small amount of space and can usually be easily installed in an existing plant.

An estimate of the cost for screening is given in Table II-1. These costs are for October 1975 and assume a 20 mesh tangential screen. The estimate assumes that the cannery floor drains will not have to be modified.

TABLE II-1
COST SUMMARY
FLOW MEASUREMENT & SCREENING

CRITERIA

- FLOW: 1 MGD AVERAGE
  2 MGD PEAK
- BOD: 1000 mg/l
- TSS: 1000 mg/l
- pH: 4.5
- SEASON: 90 DAYS
- AMORTIZATION: 10 YEARS AT 12%
- ENGINEERING, LEGAL AND CONTINGENCY COSTS INCLUDED AT 25% OF CONSTRUCTION COST
- OCTOBER, 1975 DOLLARS

SCHEMATIC

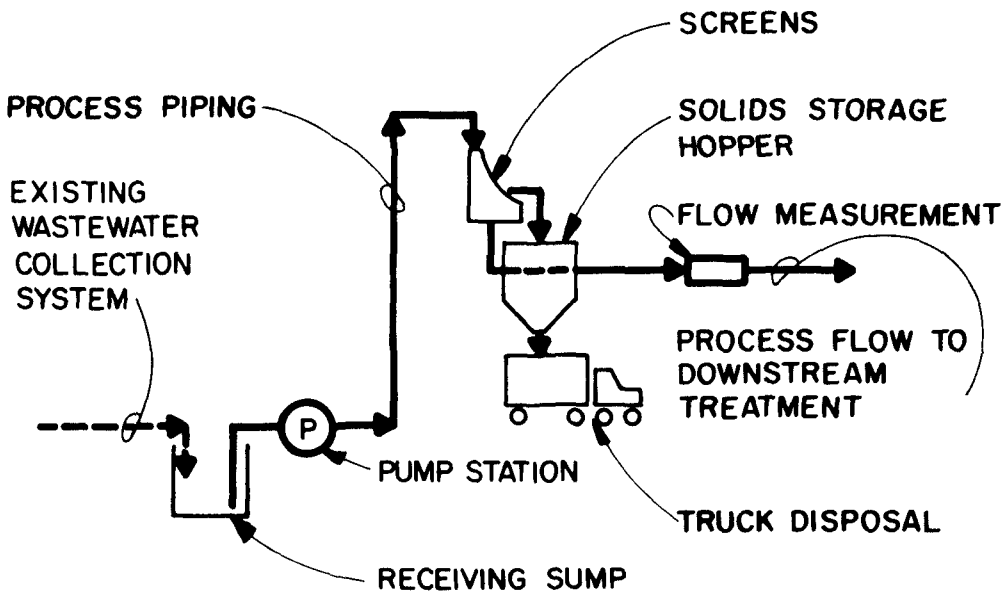

ASSUMPTIONS

- SOLIDS HAULING AND DISPOSAL AT 4 DOLLARS / cy
- USE OF 20-MESH SCREEN

COSTS

CAPITAL COST	$ 71,600
ANNUAL O & M	3,200
AMORTIZED CAPITAL COST	12,700
EQUIVALENT ANNUAL COST	15,900
UNIT COST (CENTS/1000 gal.)	17.7

Neutralization

Most cities limit the pH of wastewater discharged into the sewer. This limit is to protect the sewer lines and to ease any pH shocks to the treatment plant. The most stringent pH limits are those set between 6.5 and 8.5. The most lax are between 5 and 10.

Neutralization will normally be required for only those canneries processing naturally acid foods (tomatoes), those using a caustic peeling process (peaches, potatoes, etc.), or those using a brine (cherries, olives). Few neutralization systems are now installed for canneries discharging to a municipal system.

The most reliable neutralization system uses two or three mixed tanks, in series, to which an acid (sulfuric) or base (lime, caustic) is added. The addition of acid or base is through electrically or pneumatically operated throttling valves. The amount of opening of the valves is controlled by effluent pH readings.

If the flow is fairly constant, and the waste is always acidic, a simpler method is to use a column of limestone chips. For a consistently alkaline waste, pH can also be simply controlled through the use of carbon dioxide. The problem of reagent dose control is simpler here, but there are two serious drawbacks: the availability and cost of the gas itself, and inefficiency in introducing the gas into the waste stream.

A cost estimate for a neutralization system is given in Table II-2. The costs are for October 1975 and include two mixed tanks, an instrumentation and control system, and chemical storage. It was assumed that the waste is acidic and is neutralized with caustic. Facilities for neutralization with lime or sulfuric acid will differ only in chemical storage and delivery.

TABLE II-2
COST SUMMARY
NEUTRALIZATION

CRITERIA

- FLOW: 1 MGD AVERAGE
  2 MGD PEAK
- BOD: 1000 mg/l
- TSS: 1000 mg/l
- pH: 4.5
- SEASON: 90 DAYS
- AMORTIZATION: 10 YEARS AT 12%
- ENGINEERING, LEGAL AND CONTINGENCY COSTS INCLUDED AT 25% OF CONSTRUCTION COST
- OCTOBER, 1975 DOLLARS

SCHEMATIC

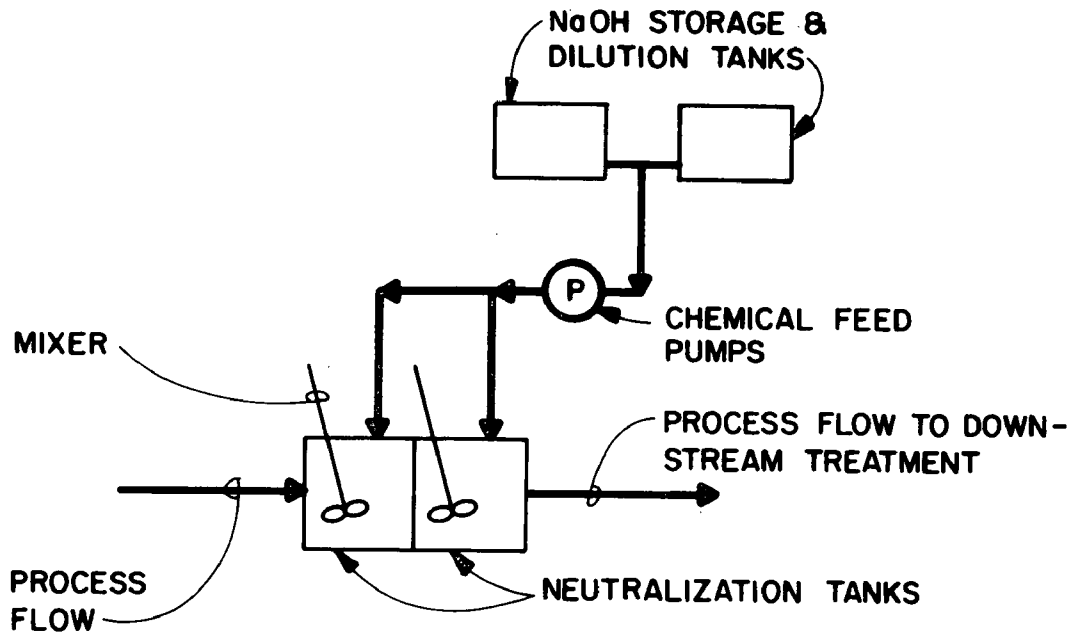

ASSUMPTIONS

- NEUTRALIZATION WITH 20% NaOH AT 200 mg/l NaOH
- NaOH COST AT 165 DOLLARS PER ANHYDROUS TON
- TANK TRUCK SHIPPING COST AT 3 CENTS/100 lb LIQUID/MILE WITH 100 MILE SHIPPING DISTANCE
- TWO NEUTRALIZATION TANKS IN SERIES WITH 15 MINUTE AVERAGE RETENTION

COSTS

CAPITAL COST	$ 100,000
ANNUAL O & M	23,600
AMORTIZED CAPITAL COST	17,700
EQUIVALENT ANNUAL COST	41,300
UNIT COST (CENTS/1000 gal.)	45.9

Flow Control

Control of surges in effluent flow is usually not required as a pretreatment measure. If flow variations can be smoothed out and accidental spills contained and controlled, the size of screens required will be lessened, and the problems of effluent pH control will be simpler.

Depending on the daily operating mode of the cannery, variations in instantaneous flow can be from very small to very great (a maximum of 4 times the minimum). Each cannery is obviously different, but large variations in flow may be smoothed with a surge tank of about ten to twenty percent of the total daily flow volume. Settling of solids will be a significant problem in a tank of this size, so the tank must either be stirred or some means provided for settled solids removal.

Soil Removal

Root crops; such as potatoes, carrots and beets, and machine harvested crops, like tomatoes, introduce large amounts of field soil to a cannery waste stream along with the raw product. Since the present incentive for field cleaning is slight, each cannery has to handle and/or remove the soil. City treatment plant operators commonly complain of this high soil loading. The abrasive material wears out seals and bearings in pump stations, settles out in low-flowing pipelines and eventually ends up in the treatment plant's solids handling system (i.e. the sludge digester).

Many city ordinances are now being written to require a cannery to remove a large fraction of the nonvolatile settleable solids (mostly soil), in their effluent.

Depending on space available and costs of disposal of the mud, several systems can be used. The simplest system is to use a series of settling lagoons. These are operated on a fill and draw basis, changing lagoons about once a month.

Once the mud has dried, it can be removed with a skip loader. If few dissolved organics are in the water, then a large settling pond can be used, which only needs cleaning once per season. This kind of pond seems to work well when the soil-laden water can be previously separated from the remainder of the cannery waste flow. Because of fruit breakage during unloading, large settling ponds, if used on tomato fluming water, will develop odors after two or three weeks.

Where space and disposal of solids is a problem, circular clarifiers (Figure II-2) canbbe used to settle and thicken the soil. Typically, circular clarifiers will produce a mud two to three times thicker than could be obtained in plain settling ponds. This means that the volume of mud to be disposed of is reduced from two to three times.

Grit removing cyclones have also been tried at some canneries. The units are relatively cheap, but they must be run at a constant flow to achieve their design efficiency. Cyclones are not as efficient as a well designed clarifier, and tend to produce a rather dilute mud. Abrasion on the cyclone can be severe.

Fine (to 400 mesh) screens have also been tried to remove soil. The application is similar to screening. Several screens are used in series, to concentrate the solids rejected from the previous one. These units approach the efficiency of clarifiers, but are considerably more difficult to operate and maintain, and are also more expensive.

FURTHER TREATMENT

If it is found that processes for the additional removal of suspended solids, or BOD areneeded, more complex units must be used. Some of these additional processes are listed below:

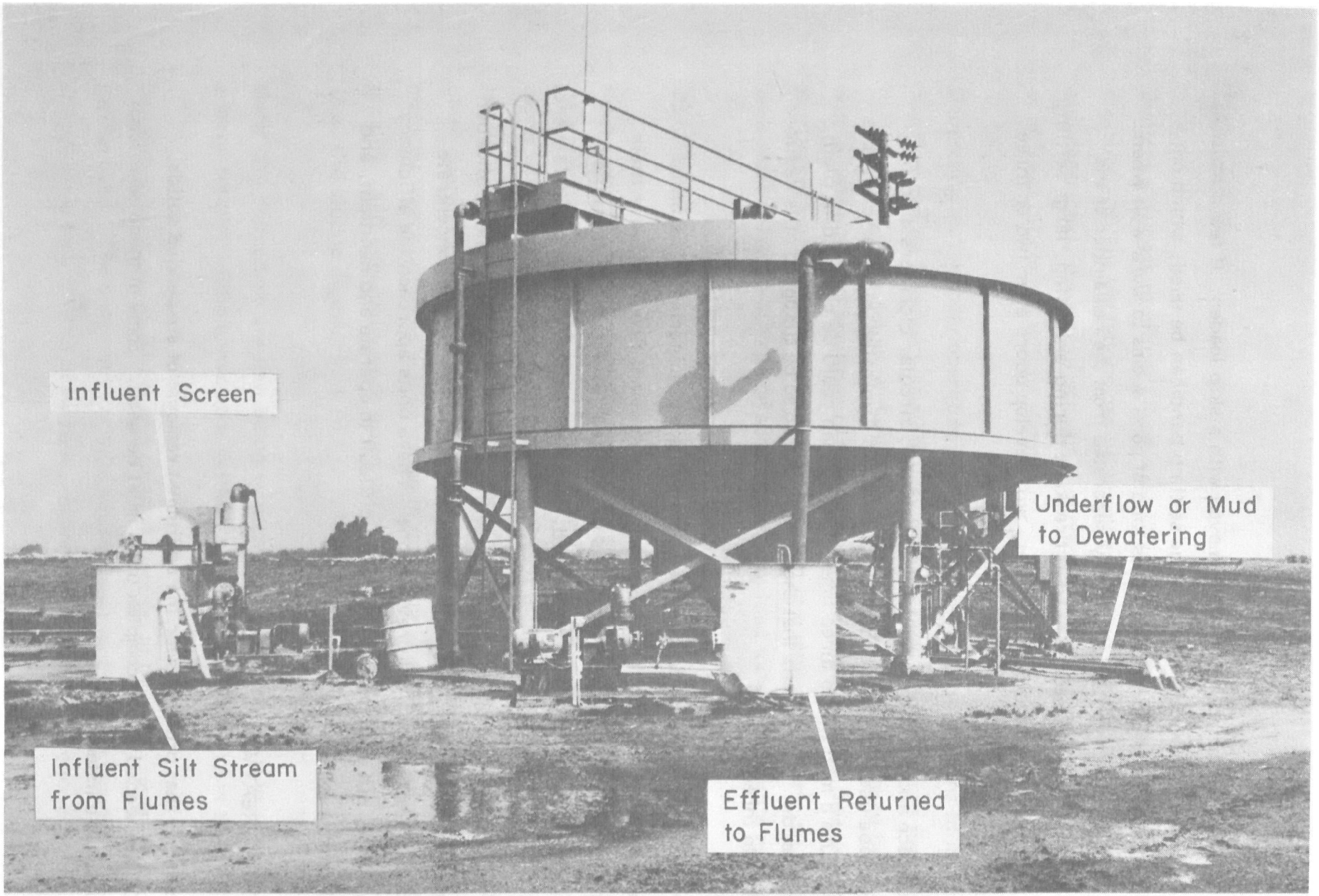

FIG. II-2 SILT CLARIFIER

(Courtesy of CH_2M HILL)

- chemical coagulation and settling for increased suspended solids removal,
- dissolved air flotation for additional suspended solids removal,
- aerated ponds to remove BOD
- biological roughing filters to remove BOD.

These processes and others are discussed in complete detail in Chapter III.

COMMUNICATIONS

The importance of good communications between processing plant staff and a local public agency treatment plant operators cannot be over emphasized.

Treatment plant operators typically feel that they are "neglected warriors" in the battle against water pollution. They are expected to treat anything which comes at them through the pipe. Good communications between processing plant staff and the treatment plant operators will improve public relations and assist the treatment plant operators in handling occasional upsets or unusual conditions which may result with minimal effects.

City plant operators need to know, as much in advance as possible, when the canneries will start up or when the product mix will be changed. Early notification of planned wastewater "dumps" of an unusual nature or immediate notification of accidental spills can be invaluable assistance to treatment plant operators.

Chapter III
FULL TREATMENT

DEFINITIONS

For the purposes of this discussion, we are defining full treatment processes as those that are used prior to discharge of wastewater to water or land. As was mentioned in the discussion of pretreatment earlier, many of these "full treatment" processes can be used if extensive pretreatment is required.

Until quite recently, full treatment could be classified as anything from primary treatment, through secondary treatment, up to advanced waste treatment (tertiary treatment). The processes commonly thought of as being under each of these three categories are listed in Table III-1. In so far as the treatment of food processing waste is concerned, primary treatment is used to remove the solid material in the wastewater, secondary treatment is used to remove the dissolved material, and advanced, or tertiary, treatment to remove anything missed by the first two.

Figure III-1 is a graphical representation of how BOD and suspended solids are removed in various levels of treatment. The length of the bars in the figure is semi-quantitative. That is, it is representative of what happens in treatment of an idealized food processing waste, not a particular one. The sum of a pair of bars represents the total amount of solids (or BOD) in the waste. The length of the BOD bars should not be compared with the length of the solids bars. BOD is an effect, or demand, exerted by the solids, and may not be in proportion to the mass of solids.

Table III-1

FULL TREATMENT UNIT PROCESSES

PRIMARY TREATMENT	SECONDARY TREATMENT	TERTIARY TREATMENT
(Suspended Solids Removal, Some BOD Removal)	BOD Removal)	(Additional Solids Removal)
Plain Sedimentation	Stabilization Ponds	Chemical Clarification
Dissolved Air Flotation	Aerated Ponds	Filtration
Chemical Treatment	Activated Sludge	
	ABF/Activated Sludge	(Removal of BOD, COD)
	Trickling Filters	Carbon Adsorption
	Anaerobic-Aerobic Ponds	
		(Removal of TDS)
		Ion Exchange
		Reverse Osmosis

FIGURE III-1
EFFECT OF TREATMENT ON SOLIDS & BOD

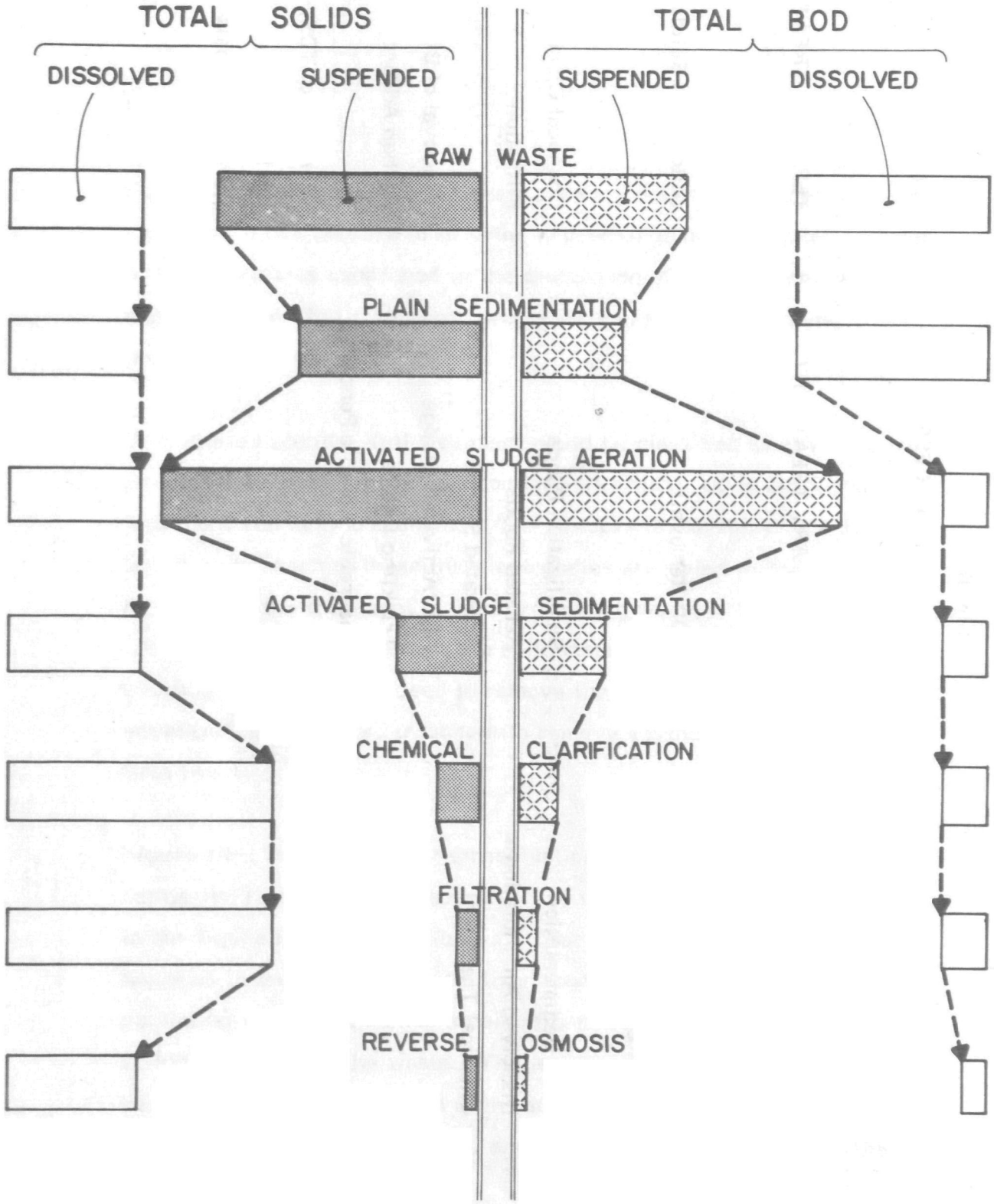

REQUIREMENTS

EPA Standards

Currently, the Environmental Protection Agency is in the process of promulgating standards for the entire fruit and vegetable processing industry. These standards will require secondary treatment for all plants that discharge into the nation's waterways by 1977. By 1983, the EPA guidelines may mandate advanced treatment. The guidelines are given in Table I-4 and the accompanying text.

For all except the apple, citrus and potato products industries, the effluent guidelines (7) assume that the 1977 requirements will be met by one of two kinds of secondary treatment: aerated ponds, or activated sludge. The 1983 guidelines are to be met by reducing the load on the treatment plants through in-plant processing changes, but large plants may have to add multimedia filtration. All plants will be required to meet a fecal coliform level of less than 400 MPN per 100 ml.

The 1977 guidelines for the apple, citrus and potato processing industries are to be met with secondary treatment as well. Exemplary secondary treatment plants studied by EPA included the following processes: activated sludge, trickling filter and aerated ponds, multiple aerated ponds, and anaerobic--aerobic ponds. The potato processors that were studied used primary clarifiers ahead of secondary treatment (6). The 1983 guidelines are to be met through the use of in-plant controls and the addition of more aerated lagoons or a sand filter. Fecal coliform standards are also set for 1983.

Thus, for the future, primary treatment alone will probably be used only for discharge to some kind of land treatment system or for pretreatment

(potatoes). Primary treatment can be productively used as a first step in secondary treatment installations if the influent waste is high in settleable suspended solids (tomatoes, carrots, potatoes).

Other Considerations

Treatment may be dictated by water re-use schemes, such as agricultural re-use, groundwater recharge, or to extend the life of a land disposal system. The State of California, for example, is setting discharge standards for waste applied to land disposal systems.

Water used for irrigation has quality requirements which are outlined in Chapter IV. Treatment requirements prior to agricultural re-use may be more or less stringent than those required for discharge to a receiving water. Minerals such as boron, sodium, and calcium play an important role in determining the feasibility of agricultural re-use. Conversely, these constituents are seldom considered in discharges to receiving waters.

There are problems of a seasonal nature in agricultural re-use. The general problem is that wastewater discharged from a seasonal food processor may come at a time when farmers are not irrigating. Thus, there could be a need for large volumes of storage during the non-irrigation seasons.

Even if a cannery is discharging into a city sewer system, and has only a pretreatment requirement, an understanding of the workings of the more elaborate full treatment processes is useful. The opening of canning season is usually a significant day for the operators of a city treatment plant. If a plant manager of a cannery understands the effect his wastewater has on the operation and performance of the city plant, his cooperation will go a long way toward forging good relations between the city and the industrial community;

The processes discussed in this section are all used in many municipal treatment plants. In keeping with the traditional flow pattern used by most cities in their treatment plants, the following discussions are divided according to primary, secondary, or tertiary treatment.

PRIMARY TREATMENT

Primary treatment is used for the removal of floatable, settleable and suspended solids from the wastewater. The removal of the solids is accomplished by gravity (or by skimming, in the case of floatables) and may be assisted by adding some chemicals (lime, alum or polymer) to make the particles settle faster, or by mixing with dissolved air and chemicals to make the solids float to the top.

In treatment of domestic waste, primary treatment usually removes 40 to 60 percent of the influent suspended solids and 30 percent removal of the BOD. These removals are usually not achieved in food processing waste. Typically, most of the BOD in these wastes is in a dissolved form which will not settle. An exception, however, is potato waste, where 40 to 60 percent of BOD and 80% of suspended solids can be removed with primary treatment.

Suspended solids reductions that are achievable in primary treatment vary widely with raw and finished products, but seem to be mostly related to the amount of non-organic material, or soil, in the waste stream. Hence, significant suspended soils reductions are attainable with primary treatment in products like potatoes, tomatoes, beets, or carrots, while very little reduction is attainable in products like peas, peaches, or pears.

For example, primary treatment is seldom provided for apple juice waste, since there are few settleable solids. The waste consists primarily of dissolved fruit sugars. Tomato processing waste is typically high in settleable solids from field soil, so primary treatment is effective. In treatment of potato processing waste, the organic solids removed can be used as an animal feed supplement in some locations, perhaps recovering part of the cost of treatment.

Gravity Sedimentation

Primary treatment systems using gravity sedimentation are sized on the theoretical settling or falling rate of the slowest particles to be removed. This settling rate is expressed as gallons treated per day divided by the surface area of the clarifier (gpd/sf). Typical values are between 800 and 1000 gpd/sf, which is equivalent to settling rates of 0.89 and 1.11 inches per minute, respectively (see Table III-2). From considerations of settling velocity alone, a clarifier only has to be deep enough to make sure that the slowest settling particles reach the bottom before going out over the weirs on the side. However, clarifiers should be deeper than this, at least 10 feet, to allow for imperfections in flow distribution, secondary influences, and sludge storage.

Primary clarifiers also thicken the settled particles, besides just allowing them to settle out. Ciruclar tanks with rotating rakes to thicken and collect the sludge are most efficient in this aspect, although many cities use rectangular primary clarifiers. To attain proper sludge thickening, attention must also be paid to the solids loading on the clarifier. The solids, floor loading, or mass flux, is the total mass of solids treated divided by the surface area of the clarifier. Typical values for solids loadings are given in Table III-2. Figure III-2 is a cross section of a typical circular gravity operated clarifier.

Table III-2

PRIMARY TREATMENT DESIGN CRITERIA

FRUIT AND VEGETABLE WASTEWATERS

CLARIFIER TYPE	Circular or rectangular with width equal to 1/4 to 1/3 of length.
BOTTOM SLOPE	One to 2 inches per foot for light sludge. Three to four for heavy sludge.
OVERFLOW RATE	
Common Municipal Waste	880 gallons/day/sq ft (gpd/sf)
Silt and Clay	300 gpd/sf
Lime Floc	900 to 1,000 gpd/sf
Alum Floc	600 gpd/sf
SIDE WATER DEPTH	Ten feet minimum. Twelve feet best.
RAKE SPEEDS	Rectangular tanks: 2-4 fpm Circular tanks: 2-4 fpm at the tip, but should be 10-15 fpm for silt and clay.
SCUM REMOVAL	Should be on all clarifiers. Scum trough should be on downwind side of clarifier.
SOLIDS LOADING	Ten to 30 lbs/sf/day for light organics. Eighty to 100 lbs/sf/day for silt and clay.
SLUDGE PIPING	Preferably 6 inches diameter. Flow velocity should be about 2 - 5 fps.

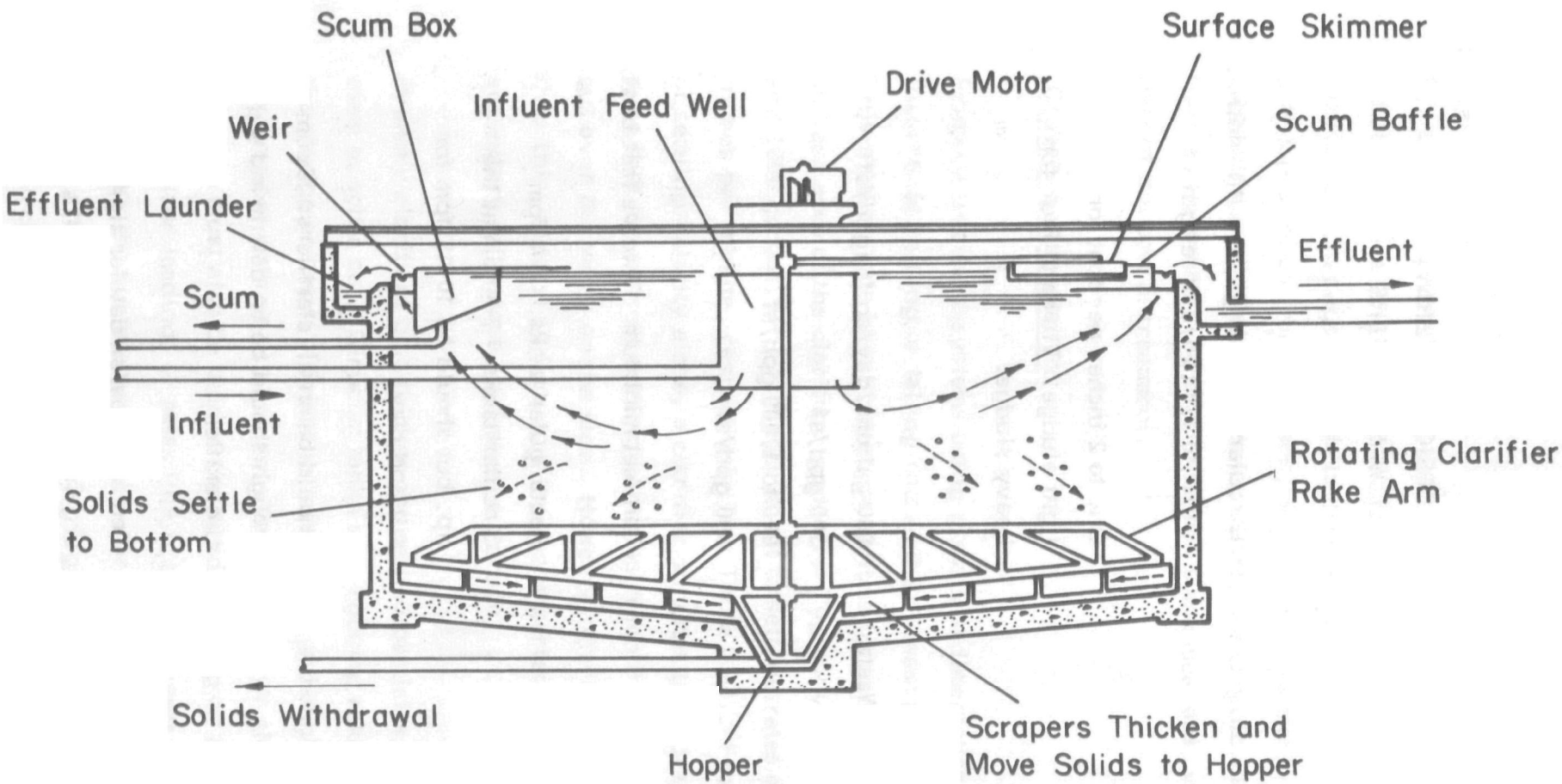

FIG. III-2 CLARIFIER

Chemicals, such as lime, alum or one of the many kinds of polymers, may be added to gravity sedimentation tanks. This increases the rate of settling of the suspended particles by coagulating smaller particles together into larger particles. Because of fluctuations in chemical requirements, chemical coagulation systems can be extremely difficult to operate on food processing waste effluents, especially if consistently high removals are required.

Air Flotation

For certain wastes, dissolved air flotation clarifiers can be used effectively. Here, removal of suspended solids is dependent on the attachment of fine air bubbles to each solids particle, providing buoyancy to the solids. The solids then rise and form a blanket, or float, on the top of the clarifier, and are skimmed off. The heavier solids that do settle are removed by either an auger or rake.

The most common type of air flotation is by dissolved air flotation. Here a portion of the waste, or effluent, is pressurized and air is injected into it. When the air and solids mixture is released into the open tank, the air comes out of solution in the form of small bubbles which become attached to the solids. In some units, the waste is mixed with a fraction of recycled effluent prior to pressurization.

Dissolved air flotation units must be designed empirically from pilot experiments for a given waste. It is necessary to examine several criteria in the pilot studies. Chemical dose requirements, hydraulic loading, solids loading and the air to solids ratio are the criteria needed for a successful design. Figure III-3 shows a typical rectangular dissolved air flotation clarifier. This one is equipped to remove solids from both the top and bottom. Common loadings in dissolved air flotation units are given in Table III-2.

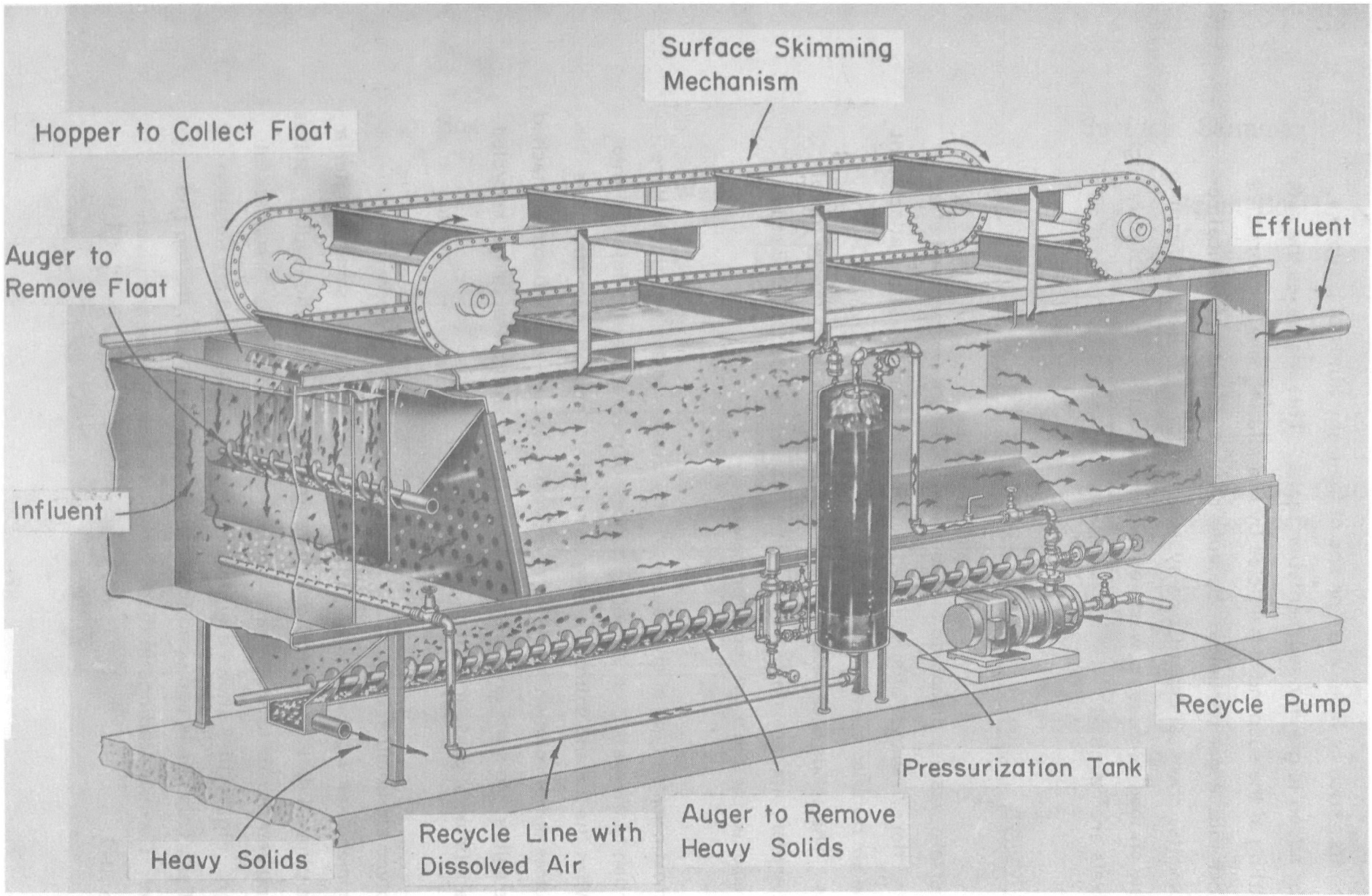

FIG. III-3 DISSOLVED AIR FLOTATION CLARIFIER

(Courtesy of Envirex)

Complete Systems

A schematic of a complete primary plant is given in Figure III-4. A summary of the important design criteria for these plants is given in Table III-2. In addition to the criteria that must be met in the design of the clarifier, it is also vitally important that the sludge handling system be well matched to the treatment system.

Unless the clarifier is oversized it will be impossible to store sludge in it until a vacuum filter or centrifuge has a chance to handle it. If the vacuum filter or centrifuge is undersized, the clarifier will build up with sludge. The sludge may then become septic and pH will drop, reducing the dewaterability of the sludge. If solids are lost over the weirs, treatment efficiency will suffer until sludge is somehow removed. A discussion on vacuum filter sizing and operation is given in Chapter V.

Primary palnts operating on waste from root crop processing, or other plants, like tomato canneries, may have special problems with field soil (mud) in the clarifier. Some clays and silts are thixotropic, which means that they will solidify unless constantly agitated. If the sludge does solidify, it must be manually removed from the clarifier.

Most mud will settle and thicken in clarifiers to 30% to 40% total solids (by weight). At those concentrations, the headloss in suction pipelines is so great that pumping is ordinarily impossible. Where sludge like this is anticipated, the clarifier should be designed with one or more of the following:

- Sludge pump beneath clarifier at center
- 6-inch minimum diameter for suction line
- Dilution water piped to head end of suction line

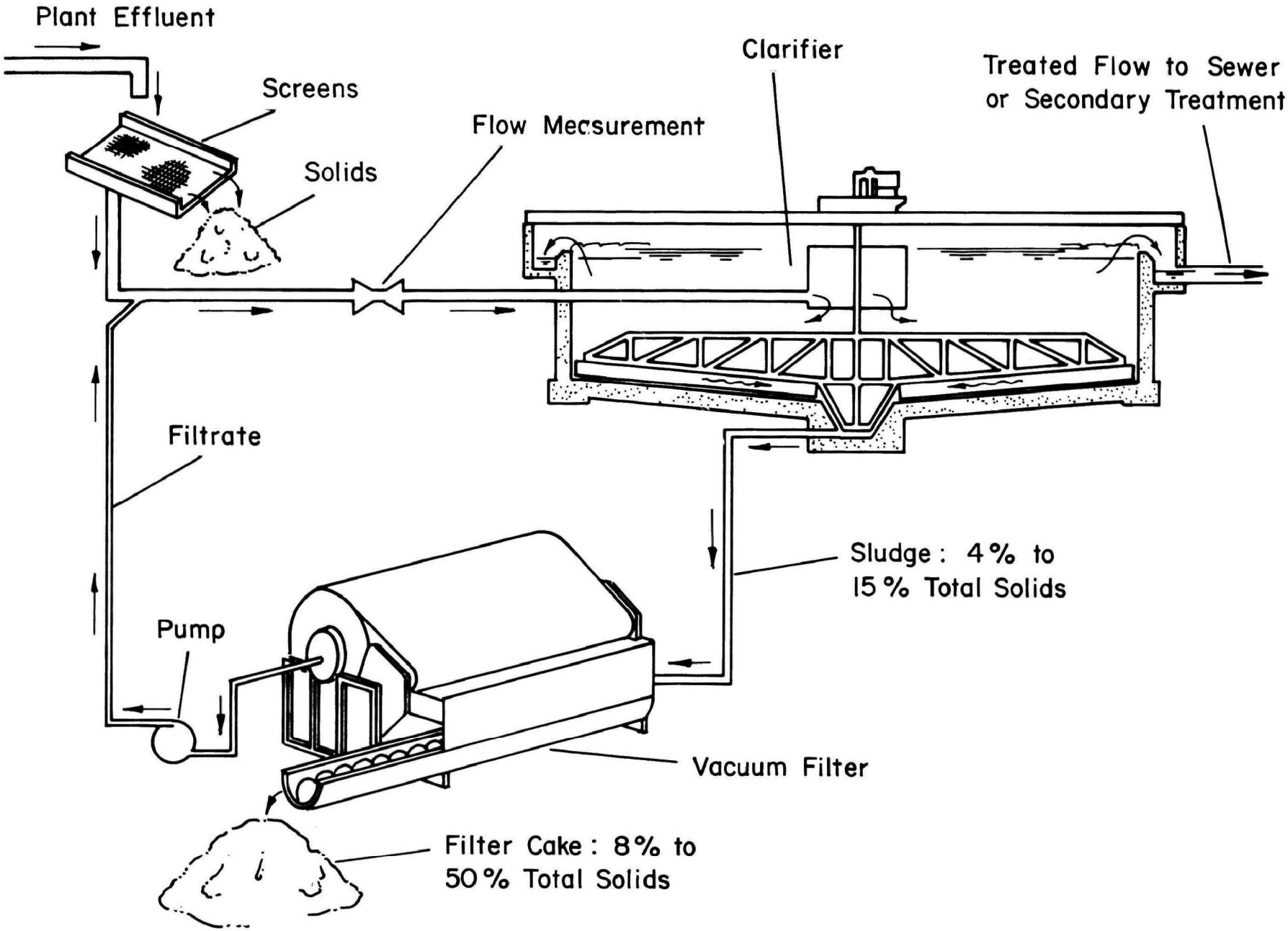

FIG. III-4 PRIMARY TREATMENT PLANT DIAGRAM

BIOLOGICAL SECONDARY TREATMENT

While primary treatment is mostly used for removal of settelable inorganic solid material, secondary treatment for removal of soluble organic material (BOD) (see Figure III-1). Biological secondary treatment may be (1) aerobic, which means that the biochemical reactions are carried out in the presence of oxygen; or (2) anaerobic, in which case different biochemical reactions are carried out in the absence of oxygen.

Anaerobic systems produce considerably less sludge than aerobic systems and are commonly used to treat sludge in municipal plants. Anaerobic lagoons followed by stabilization ponds have also been used with some success on citrus wastes and potato waste. These treatment systems are rare so the remainder of this discussion will be devoted to aerobic systems.

The basic treatment unit in aerobic systems is a biological reactor (aerated tank, pond, or trickling filter) which provides an environment for the conversion of soluble organic material into insoluble microorganism cells. The subsequent unit is a secondary clarifier where the cells are allowed to settle. The settled cells, or sludge, may be either returned to the biological reactor cell mass (the mixed liquor) or wasted from the system (waste sludge). Large volumes of organic solids are generated in secondary treatment processes, as the result of cellular growth. Usually, 0.3 to 0.6 pounds of cells are created for every pound of BOD removed. These solids are typically very wet (0.5 to 1.0% solids by weight), voluminous, and are difficult to dewater.

There are several different biological systems which are used to provide secondary treatment. In all cases, the secondary treatment units must provide an environment suitable for the growth of biological organisms which do the actual work of waste treatment. These treatment units

depend on a sufficient supply of oxygen to support aerobic decomposition of the organic matter. Aerobic biological decomposition, if operating correctly, is practically odorless and is capable of very high removal of the organic matter contained in wastes (90 to 95 percent).

Two general types of biological secondary treatment will be discussed in this section: (1) ponding systems, and (2) high rate or "mechanical" treatment plants.

The high rate processes discussed will include:

- Activated sludge (both air and oxygen)
- Activated biological filter
- Rotating biological contactors
- Trickling filter

A summary of design factors to be considered for each process discussed is included at the end of this section.

AERATION METHODS

Unless stabilization lagoons or ponds are used to meet secondary treatment requirements, some type of artificial aeration system is required. These aeration systems can be classified according to two approaches: (1) bubbling compressed air into the waste through the use of diffusers (diffused aeration), and (2) entrainment of air in the waste through fairly violent agitation of the surface (mechanical aeration).

Air is compressed to about 8 psig with the use of blowers in diffused air systems. The compressed air then enters the waste through diffusers, which are mounted close to the bottom of the aeration tank. There are many variations in the methods diffusing the air into solution, but for all

of these, the efficiency of diffusion is only about seven percent. Diffusers are prone to clogging from particles in the waste, or with deposits built up on the diffuser pores, so they should be mounted so they can easily be removed for cleaning. The blowers are quite noisy and should be mounted in a separate room. As a rule, to maintain complete mixing, 20 to 30 cfm (cubic feet per minute) should be applied to each 1000 cubic feet of basin volume. Diffused air systems deliver 1.5 to 1.7 pounds oxygen per horsepower-hour at field conditions.

A typical mechanical aerator is shown on Figure III-5. These aerators may be either rigidly mounted in a tank, or installed with floats, so they can rise and fall with the water level, like the one illustrated. Mechanical aerators typically deliver 1.5 to 2 pounds of oxygen per horsepower-hour at field conditions at sea level. The amount of power to maintain complete mixing with these units is one-half to one horsepower per 1000 cubic feet.

PONDING SYSTEMS

In general, ponding systems can be considered for use where ample land area is available, with allowances for an ample buffer zone around the pond. Typically, ponding systems do not achieve the high levels of treatment provided by the high rate processes, but are considerably easier to operate and maintain.

Two common types of ponds are stabilization ponds and aerated ponds. The treatment process is similar in each, but for a given waste, an aerated pond will be smaller than a stabilization pond.

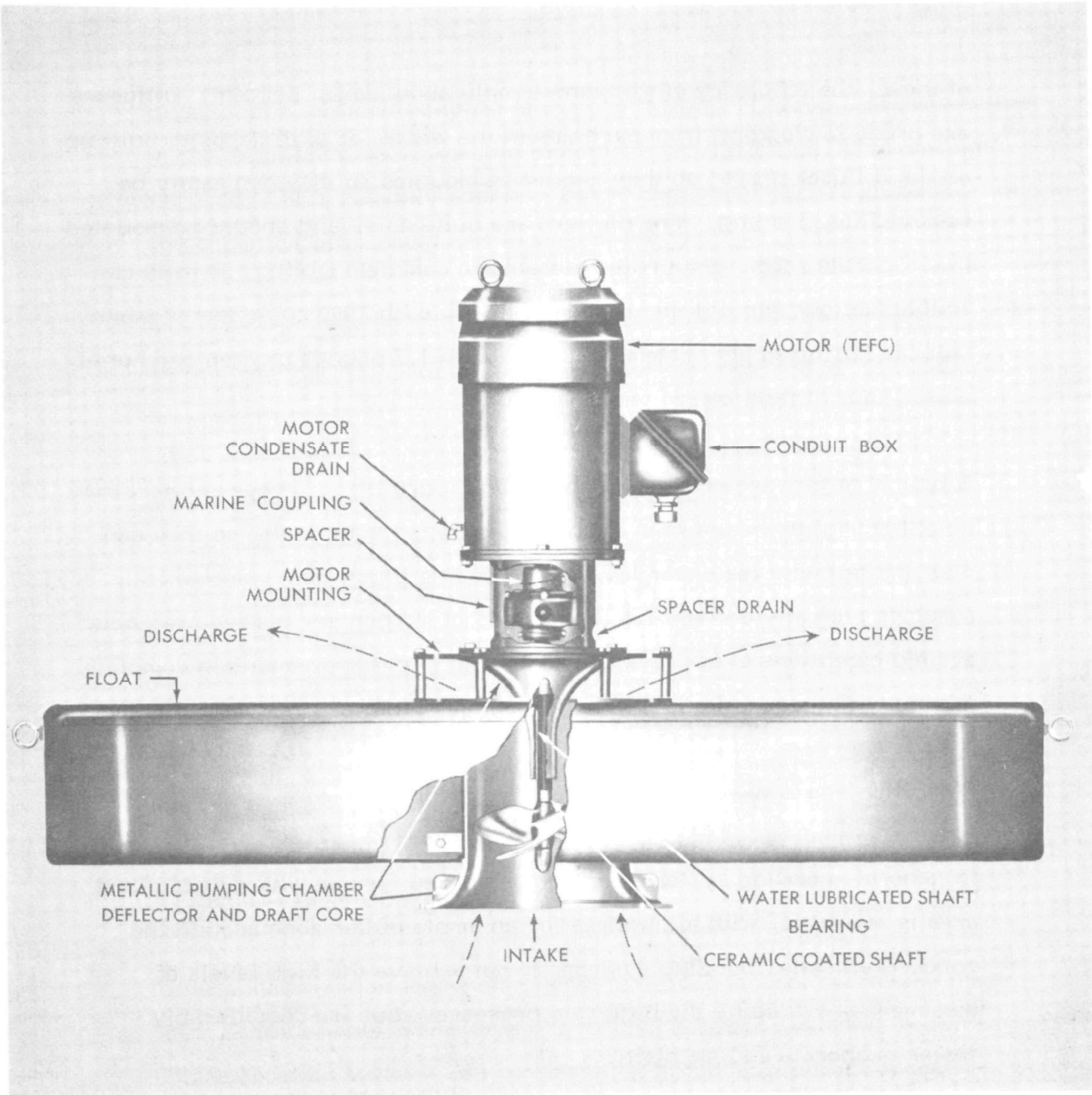

FIG. III-5 FLOATING MECHANICAL AERATOR

(Courtesy of Ashbrook)

Stabilization Ponds

Stabilization ponds are large, usually 3 to 6 ft. deep, and retain the wastewater for a period of 60 days or longer. Oxygen necessary for biological action is obtained primarily from the action of photosynthetic algae, although some oxygenation occurs as a result of the contact between the pond surface and the atmosphere. Depending on the degree of treatment desired, waste stabilization ponds may be designed to be operated in a variety of ways, including series and parallel operations; and in some cases, may include tertiary ponds for algae removal prior to effluent discharge. Air temperature has a great effect on the success of ponds as treatment.

Because of the high strength of canning waste, BOD loading is usually the major criterion. Loading should be kept at 20 to 40 pounds BOD per acre per day. There are several problems with stabilization ponds that are resulting in their being abandoned, at least in joint treatment systems with municipalities. These are:

1. Growth of algae, causing high effluent suspended solids
2. Odors, especially during start up and shut down.
3. Large land requirement.

There are several algae removal systems under study and some under construction; but there is no full scale, long-term operating experience.

Aerated Ponds

Aerated ponds are similar to stabilization ponds, except that additional oxygen is artificially added either by compressed air diffusion, or by use of mechanical agitation (Figure III-5). Supplementation of oxygen in this manner allows the volume of the ponds to be greatly decreased, and the

depth increased (to 12 feet), thus reducing surface area and heat loss. The biological life in an aerated pond will contain limited numbers of algae, and will be similar to that found in an activated sludge plant.

Table III-3 gives and estimated cost of an aerated pond for a 1 million gallon per day wastewater flow. The ponds are lined with a rubber liner with vents. In addition to the assumptions given in the Table, the following should be noted:

- o pond depth is 10 feet
- o inside side slope 3:1, outside 2:1
- o mechanical aerators : 12 at 40 HP each and one at 20 HP; all moored to the bottom
- o total area for both ponds is 11 to 12 acres.
- o material used in dike construction comes from the pond excavation

HIGH RATE PROCESSES

Table III-4 summarizes a series of high rate processes and shows the relative comparison of such characteristics as: area requirements, stability, reliability, and ability to withstand shock loads. This summary table will be a good reference for general consideration of alternative processes.

Activated Sludge

In the activated sludge process, the waste is discharged into large aeration basins into which atmospheric oxygen is diffused by releasing compressed air into the waste or by mechanical surface aerators. The presence of abundant organic food, nutrients, and oxygen is favorable to the growth of a heavy concentration of microorganisms (mixed liquor). Ordinarily, dissolved oxygen levels are kept at 1-2 mg/l. The organic content of the

TABLE III-3
COST SUMMARY
AERATED LAGOON SYSTEM

CRITERIA

- FLOW: 1 MGD AVERAGE
  2 MGD PEAK
- BOD: 1000 mg/l
- TSS: 1000 mg/l
- pH: 4.5
- SEASON: 90 DAYS
- AMORTIZATION: 10 YEARS AT 12%
- ENGINEERING, LEGAL AND CONTINGENCY COSTS INCLUDED AT 25% OF CONSTRUCTION COST
- OCTOBER, 1975 DOLLARS

SCHEMATIC

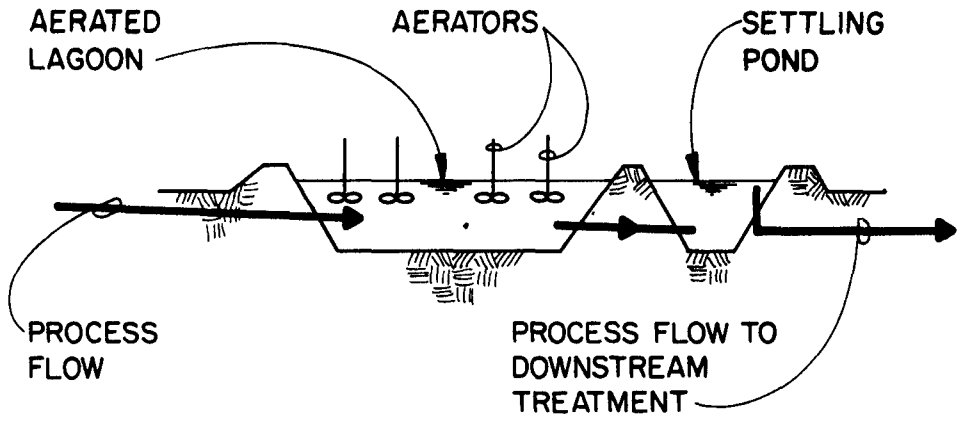

ASSUMPTIONS

- BOTH AERATED LAGOON AND SETTLING POND ARE LINED EARTHEN BASINS
- 30-DAY DETENTION TIME IN AERATED LAGOON
- 400 GPD/SF OVERFLOW RATE IN SETTLING POND
- NO NUTRIENT ADDITION
- EXCAVATION & DISPOSAL COST AT $4/cy
- POWER COST AT 2 CENTS/KW-HR

COSTS

CAPITAL COST	$ 1,160,000
ANNUAL O & M	16,000
AMORTIZED CAPITAL COST	205,300
EQUIVALENT ANNUAL COST	221,300
UNIT COST (CENTS/1000 gal.)	245

Table III-4

SECONDARY TREATMENT PROCESS COMPARISON

(Rating: 1=Lowest, etc.)

PROCESS	Capital Cost (no land)	Operation, Maintenance Cost	Area Requirement	Energy Requirement	Sludge Production	Sludge Density	Removal Efficiency	Stability	Sensitivity to Nutrient Deficiency	Level of Operator Skill Required	Odor Potential
STABILIZATION PONDS	1	1	4	1	1	3	1	1	1	1	4
AERATED PONDS	1	1	3	2	1	3	2	1	2	1	3
AIR ACTIVATED SLUDGE	3	3	2	3	4	2	4	2	4	3	2
OXYGEN ACTIVATED SLUDGE	4	4	1	4	3	1	6	4	2	4	1
ABF/ACTIVATED LSUDGE	4	4	1	4	4	2	5	4	3	5	1
ROTATING BIOL. CONTACTORS	3	2	2	2	2	3	4	3	4	2	3
TRICKLING FILTERS	2	2	2	2	3	4	3	2	4	2	3

waste is removed by the life processes of the microbes and stored as protoplasm. The mixed liquor is then removed in sedimentation basins, leaving a highly treated effluent. About half or more of the settled sludge is returned to the aeration tank to maintain the mixed liquor concentration. A schematic of an activated sludge plant is given in Figure III-6. Design criteria for activated sludge processes are given in Table III-5. Figures III-7 and 8 are photographs of activated sludge plants treating potato wastes.

An operational problem with activated sludge plants is sludge bulking. Sludge bulking is the inability of the activated sludge to settle or thicken in the secondary clarifier. This is a common occurrence in plants treating cannery wastewater containing a high percentage of carbohydrates and is due to the formation of filamentous, or stringy, bacteria. The effect is to considerably reduce the long term removal efficiency of the affected plant.

There are many variations of activated sludge processes; however, all operate basically the same. The variations are the result of unit arrangement and methods of introducing air and waste into the aeration basin. A small, compact, prefabricated activated sludge plant is shown in Figure III-9.

Tables IV-6 A and -6B give cost estimates for an activated sludge plant (1.0 mgd) both with, and without, sludge digestion and dewatering. Besides the assumptions listed in the tables, the following should be noted:

- activated sludge F/M : 0.2
- aeration basin sludge age : 6.5 days
- aeration basin mechanical aerators : 10 at 50 HP each
- two 40' diameter clarifiers
- area requirements for activated sludge alone : 2 acres, approx.
- area requirements with digestion, dewatering : 3 acres, approx.
- aerobic digestor sludge age : 15 days

- two gravity dewatering units
- raw waste activated sludge to truck : 95,000 gal/day at 0.8% TS
- digested, dewatered, waste activated sludge to truck : 35 cubic yards/day at 9% TS
- small building for motor control center and pumps
- small building to house dewatering units

The activated sludge process variation using high purity oxygen (HPO) merits some discussion. This system employs covered multistage (3 to 5 stages) aeration basins into which oxygen-rich gas is fed. Oxygen utilization is approximately 90%. Oxygen concentration varies from above 90% in the inlet gas to about 50% in the exhaust gas. Mechanical mixers project through the roof to mix the basin contents and entrain oxygen. Dissolved oxygen concentrations can be maintained at high levels (7 to 15 mg/l) (versus 1 to 2 mg/l in conventional plants) in the wastewater flow. The basin effluent is clarified in standard secondary clarifiers and sludge is returned to the first stage aeration. Excess sludge is wasted as in a conventional activated sludge plant.

Current knowledge of food processing waste and the high purity oxygen activated sludge process strongly suggest that, when compared with more conventional activated sludge systems, use of this modified process will result in the following:

- A sludge more settleable in secondary clarifiers, resulting in lower secondary effluent suspended solids and BOD levels. This advantage has been observed in treatment of other high strength carbohydrate wastewaters and is believed related to the high dissolved oxygen concentration within the system.
- Retention of wastewater heat necessary for effective treatment in cold climates.
- Less land area

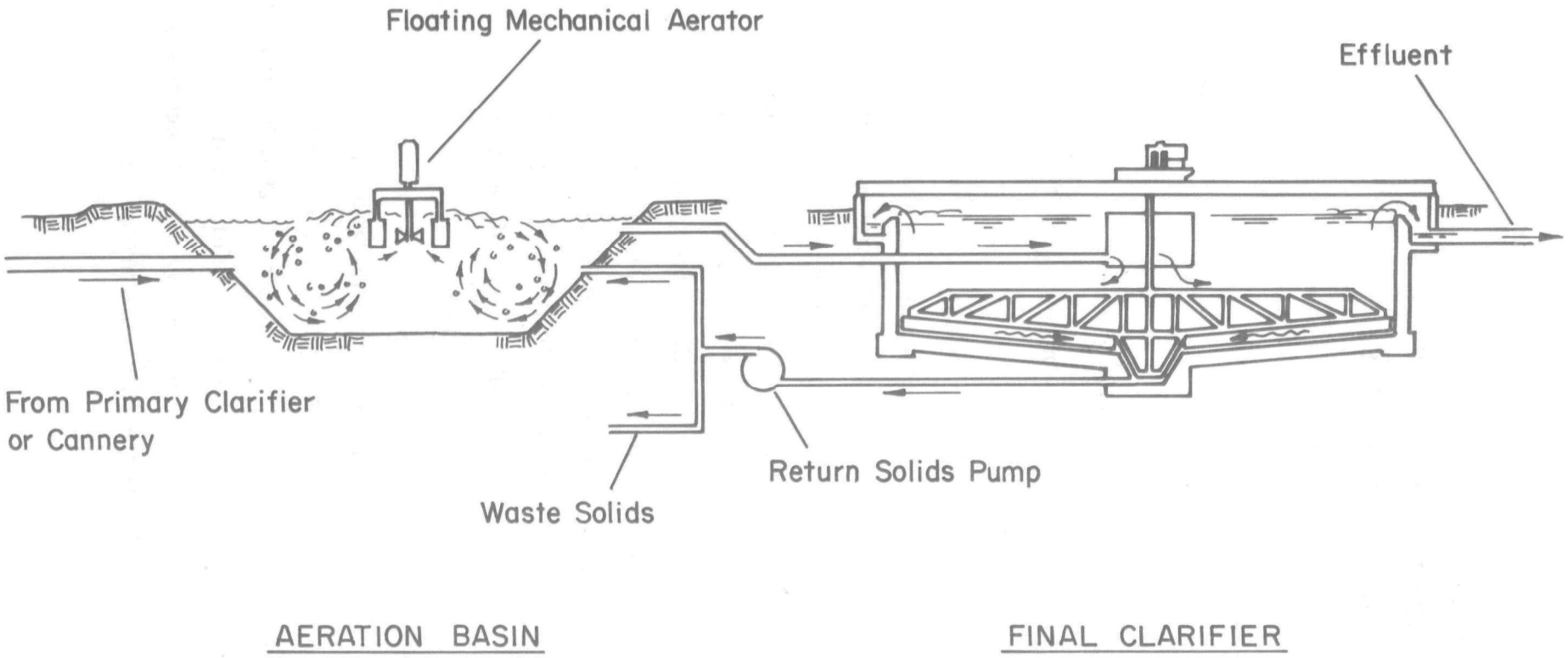

FIG. III-6 ACTIVATED SLUDGE PLANT DIAGRAM

Table III-5

SECONDARY TREATMENT DESIGN CRITERIA

FRUIT AND VEGETABLE WASTEWATERS

CONVENTIONAL ACTIVATED SLUDGE	
AERATION BASIN	
Mixed Liquor Suspended Solids (MLSS)	2,000 - 4,000 mg/l
Food Microorganism Ratio (F/M)	0.1 - 0.5 lb BOD removed per lb BOD removed
Sludge Age (Days)	3 - 10 lbs MLSS per lb sludge wasted per day
Aeration Time	16 - 48 hours, but controlled by sludge age, F/M, and MLSS concentration
Depth	10 - 20 feet. 7 feet min.
Aeration Type	Floating Mechanical Aerators or diffused aeration
Returned Sludge	25 - 100 percent of incoming plant flow
SECONDARY CLARIFIERS	Typical overflow rate is 400 gdp/sf. Solids or floor loading is 25 lb/sf/day based on influent plus recycle flow. Most secondary clarifiers are circular.

PURE OXYGEN ACTIVATED SLUDGE

AERATION BASIN

Mixed Liquor Concentration (MLSS)	3,000 - 5,000 mg/l
Food/Microorganism Ratio (F/M)	0.5 - 0.7 lb BOD removed per lb of MLSS
Sludge Age (Days)	6 - 10 lb MLSS per lb sludge wasted per day
Aeration Time	8 - 24 hours, but controlled by by sludge age, F/M, and MLSS concentration
Depth	15 feet
Aeration Type	Diffused high purity oxygen in mechanically agitated covered tanks
Returned Sludge	25 - 100 percent of incoming plant flow
Clarifier	Same as conventional activated sludge except floor loading can be increased to 35 lb/sf/day

AERATED PONDS

Depth	7 - 15 feet
Hydraulic Retention Time	20 - 45 days

ABF/ACTIVATED SLUDGE

FILTER TOWER

Height	20 feet
Configuration	Circular with rotating waste distributors, or rectangular with stationary distributor

Hydraulic Loading	1 - 2 gpm/sf of tower area including recycle
BOD Loading	0.15 - 0.3 lb BOD per cubic foot of filter media
Media Type	Redwood slats or various plastic shapes
AERATION BASIN	Same criteria as an activated sludge aeration basin. Assume that 50-60 percent of the influent BOD has been removed by the tower.
CLARIFIER	Same criteria as an activated sludge clarifier. Sludge can be returned to both the aeration basin and the filter tower.

TRICKLING FILTRATION (High Rate)

TRICKLING FILTER

Depth	3 - 8 feet
Configuration	Circular with rotating distributor
Hydraulic Loadings	20 - 90 gallons/sf/day
BOD Loading	20 - 50 lbs BOD/1,000 cf
Recirculation	100 - 400 percent of influent flow
Media Type	Rock Media: 1 - 3 inches diam. Plastic media now being used.

FIG. III-7 ACTIVATED SLUDGE PLANT

(Courtesy of CH_2M HILL)

FIG. III-8 ACTIVATED SLUDGE PLANT

(Courtesy of CH_2M HILL)

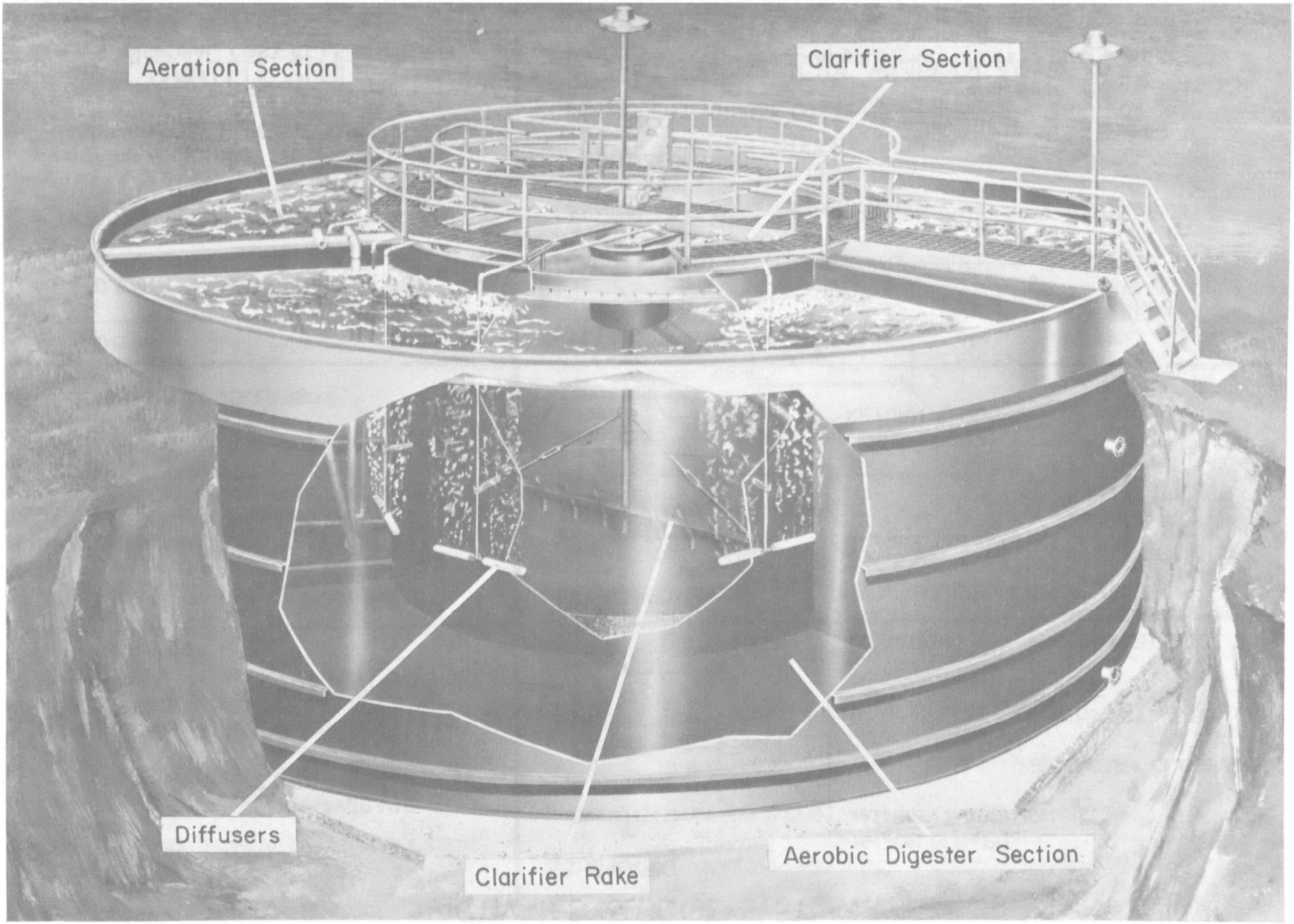

FIG. III-9 PACKAGE ACTIVATED SLUDGE PLANT

(Courtesy of Cantex)

TABLE III-6A
COST SUMMARY
ACTIVATED SLUDGE SYSTEM

CRITERIA

- FLOW: 1 MGD AVERAGE
  2 MGD PEAK
- BOD: 1000 mg/l
- TSS: 1000 mg/l
- pH: 4.5
- SEASON: 90 DAYS
- AMORTIZATION: 10 YEARS AT 12%
- ENGINEERING, LEGAL AND CONTINGENCY COSTS INCLUDED AT 25% OF CONSTRUCTION COST
- OCTOBER, 1975 DOLLARS

SCHEMATIC

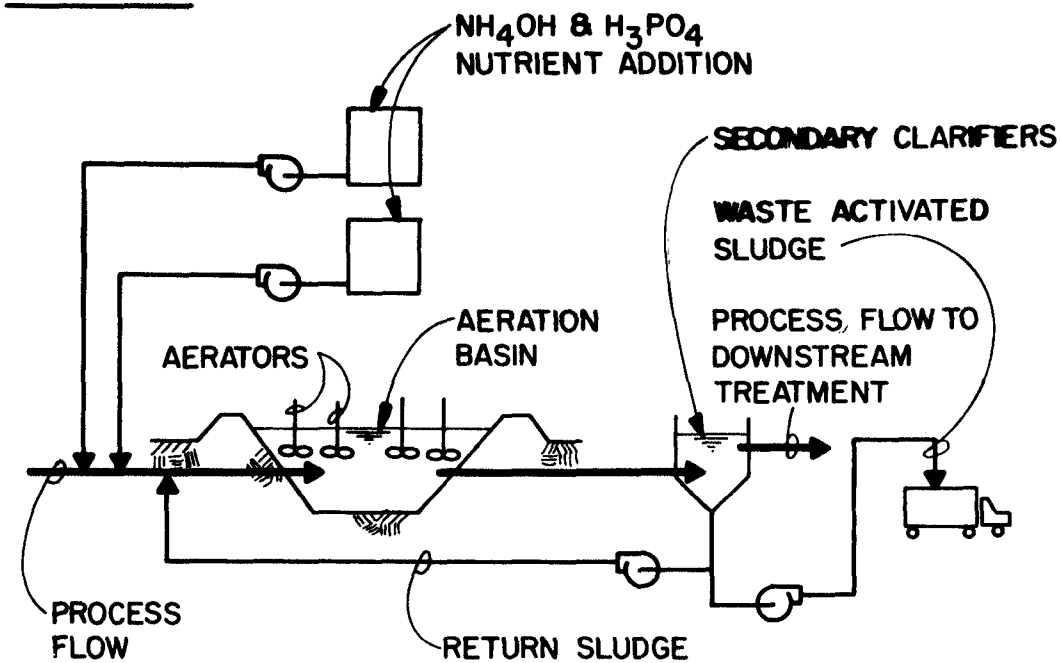

ASSUMPTIONS

- LINED EARTHEN AERATION BASIN WITH 2-DAY DETENTION TIME
- TWO CONVENTIONAL SECONDARY CLARIFIERS WITH 400 GPD/SF OVERFLOW RATE
- COST OF NH_4OH AT \$184/TON (100% BASIS) COST OF H_3PO_4 AT \$0.215/lb SOL'N.
- POWER COST AT 2 CENTS/KW-HR
- W.A.S. DISPOSAL COST AT 1.5 CENTS/gal FOR 20-MILE HAUL

COSTS

CAPITAL COST	\$ 645,000
ANNUAL O & M	175,000
AMORTIZED CAPITAL COST	114,150
EQUIVALENT ANNUAL COST	289,150
UNIT COST (CENTS/1000 gal.)	321

TABLE III-6B
COST SUMMARY
ACTIVATED SLUDGE WITH AEROBIC DIGESTION AND DEWATERING

CRITERIA

- FLOW: 1 MGD AVERAGE
  2 MGD PEAK
- BOD: 1000 mg/l
- TSS: 1000 mg/l
- pH: 4.5
- SEASON: 90 DAYS
- AMORTIZATION: 10 YEARS AT 12%
- ENGINEERING, LEGAL AND CONTINGENCY COSTS INCLUDED AT 25% OF CONSTRUCTION COST
- OCTOBER, 1975 DOLLARS

SCHEMATIC

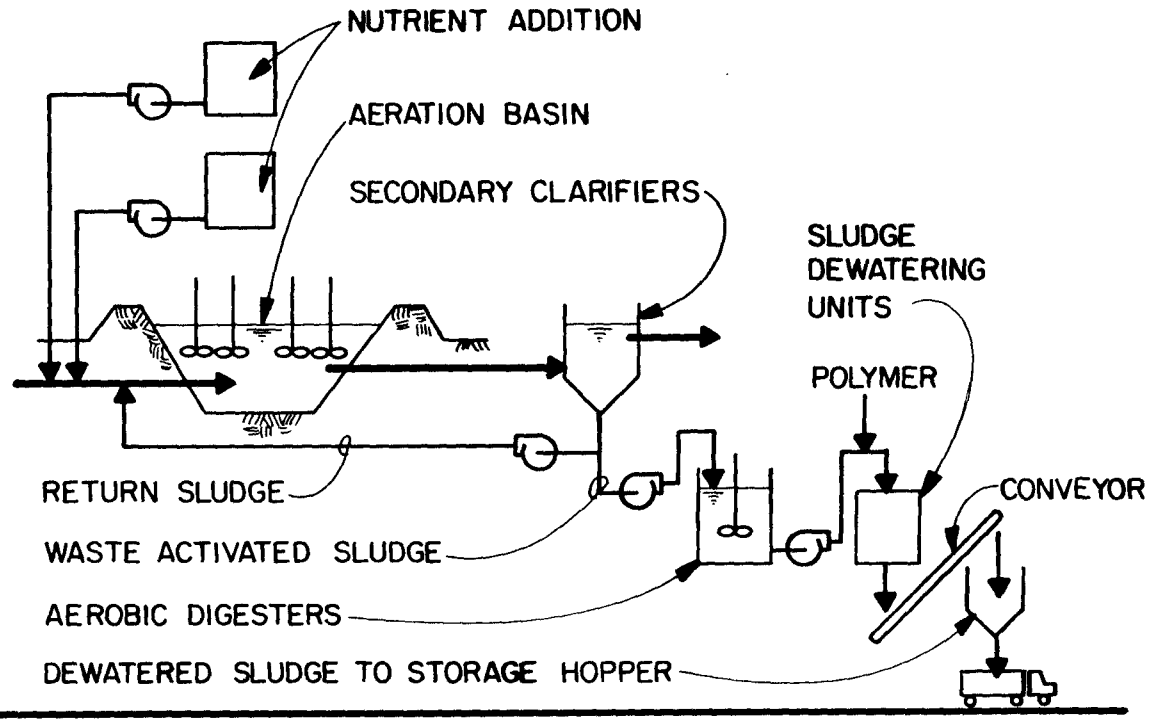

ASSUMPTIONS

- SEE ASSUMPTIONS FOR ACTIVATED SLUDGE SYSTEM (TABLE III-6A)
- DEWATERED SLUDGE TRUCKING COSTS AT $3.70/TON DRY SOLIDS/MILE
- POLYMER ADDITION AT 6 lb/TON SOLIDS
- POLYMER COST AT $2.25/lb
- UNIT DEWATERING RATE AT 1000 GPH FOR DIGESTED SLUDGE

COSTS

	$
CAPITAL COST	1,115,000
ANNUAL O & M	58,500
AMORTIZED CAPITAL COST	197,350
EQUIVALENT ANNUAL COST	255,850
UNIT COST (CENTS/1000 gal.)	284

The capital cost of a high purity oxygen system is usually greater than conventional systems, but it should be considered where the need for biological secondary treatment is indicated. Commonly used design criteria for HPO processes are given in Table III-5.

Activated Biological Filter (ABF)

Activated bio-filtration (ABF) was developed in recent years to take maximum advantage of artificial filter media characteristics. Plastic and redwood biological filter media have high void to total volume ratios, and high surface to total volume ratios. These characteristics make high organic loadings possible.

In the original ABF system, secondary clarifier underflow is combined with the secondary plant influent and pumped to the bio-filter. Bacteria grow on the filter media and in the wastewater flow. Portions of the bacterial mass continuously sluff from the media, join the bacteria growing in the wastewater, and settle out in the secondary clarifier.

A majority of the bacterial mass settled in the secondary clarifier is returned to the filter influent to maintain a high concentration of bacteria in the flow through the filter. The flow has the appearance of activated sludge, giving rise to the process name, activated bio-filtration.

A recent modification of the ABF process has been the insertion of an activated sludge aeration tank between the ABF tower and the final clarifier. The effluent from the tower is sent through the aeration basin for further treatment. The aeration basin is designed to assimilate 50 to 100 percent of the organic loading to the tower. Returned sludge from the final clarifier is split between the tower and the aeration basins.

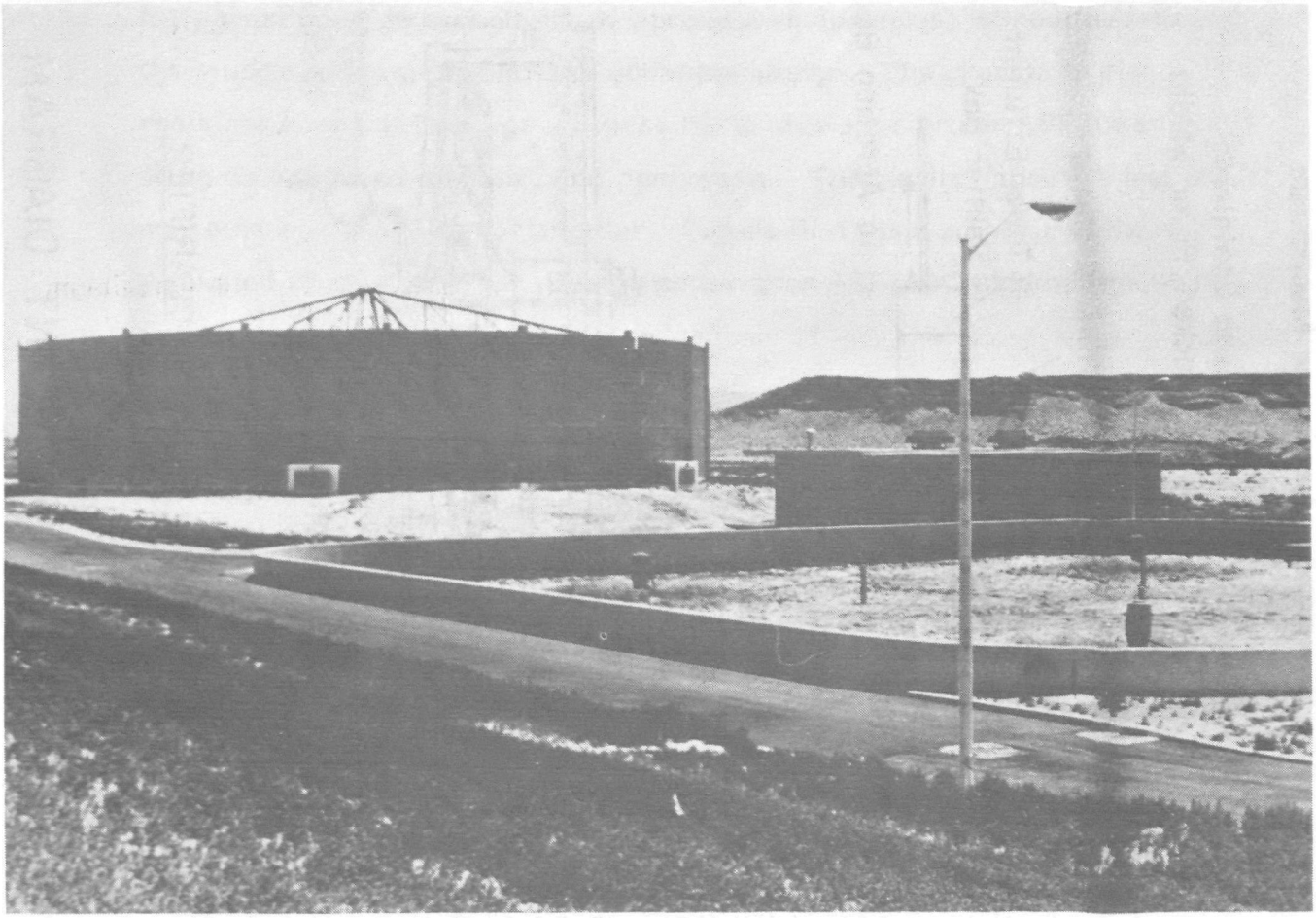

FIG. III-10 ACTIVATED BIOLOGICAL FILTER TOWER

(Courtesy of CH_2M HILL)

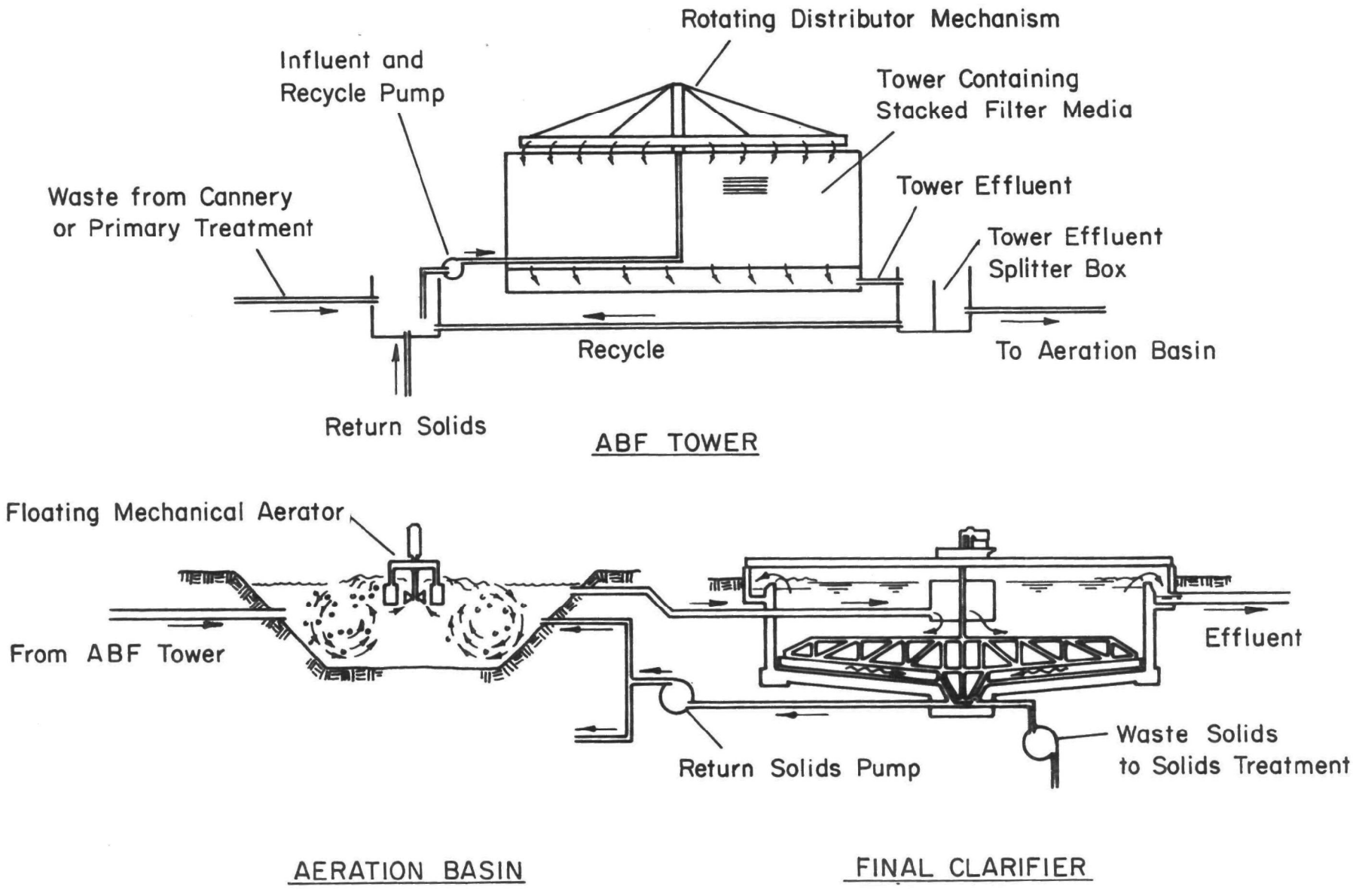

FIG. III-11 ABF-ACTIVATED SLUDGE PLANT DIAGRAM

This ABF-Activated sludge process has shown great promise in successfully treating high carbohydrate wastewaters (potatoes) without developing the sludge bulking problems of activated sludge. The process is also resistant to shock loadings. Figure III-10 shows a circular ABF tower operating on combined domestic and pear waste. The towers (about 20 feet high) may also be square or rectangular. Figure III-11 is a scematic of the ABF-Activated sludge process. Design criteria for ABF/Activated sludge plants are given in Table III-5

OTHER HIGH RATE PROCESSES

Rotating Biological Contactors (RBC's)

This system consists of numerous large diameter, lightweight, discs mounted on a horizontal shaft in a semi-circular shaped tank. The discs are rotated slowly with the lower half of their surfaces submerged in the wastewater. Bacteria and other microorganisms grow on the disc surfaces and in the tank. In rotating, the discs carry a film of wastewater into the air where it absorbs oxygen. The mixing created by the disc rotation also transfers oxygen to the tank contents. Shearing forces cause excess bacterial growth to sluff from the discs and into the wastewater. The sluffed solids flow out with the treated waste to the secondary clarifier for separation and disposal.

Rotating biological contactors have been successfully applied to municipal and some industrial waste. Operation is simple and power requirements are low, but the capital costs of the discs are high. Prior to the system's application in treatment of food processing waste, a number of questions should be answered by pilot plant testing and economic analysis. Among these questions are: (1) effect of wastewater pH, (2) effect of wastewater

strength, (3) BOD and suspended solids removal efficiency relationships to BOD and suspended solids unit loadings, and (4) capital and total costs in relation to alternative systems available.

Biological or Trickling Filters

Wastewater being treated by trickling filtration is distributed over filter beds constructed either of rocks 2½ to 6 inches in size, plastic media or wood media. Atmospheric oxygen moves naturally through the void spaces in the filter material. In the environment thus created, biological slimes (consisting mainly of bacteria) flourish and colonize on the rock surfaces. As the waste trickles over the surface of the biological slime growths, organic matter is removed. As the slime growths become more and more concentrated, their attachment to the media surface is weakened and the biological growth is washed from the filter. The solids are then removed by sedimentation as in other high rate processes. See Figure III-12 for a diagram of this process.

There are a number of variations of the biological filter process, depending on the waste loadings applied to the filters, the arrangment of the units, and the number of filters employed.

Trickling filters are very stable and easier to operate than activated sludge plants. Removals of BOD seldom exceed 80 percent, and the effluent contains a higher level of suspended solids than the activated sludge process. For this reason, no new trickling filter plants are now being designed to meet the new EPA requirements. Common design parameters for trickling filters are given on Table III-5.

Trickling filters have also been used ahead of activated sludge plants as roughing filters to cut down high strength wastes. If the sludge is recycled back to the filter, the flow scheme is similar to ABF-Activated sludge.

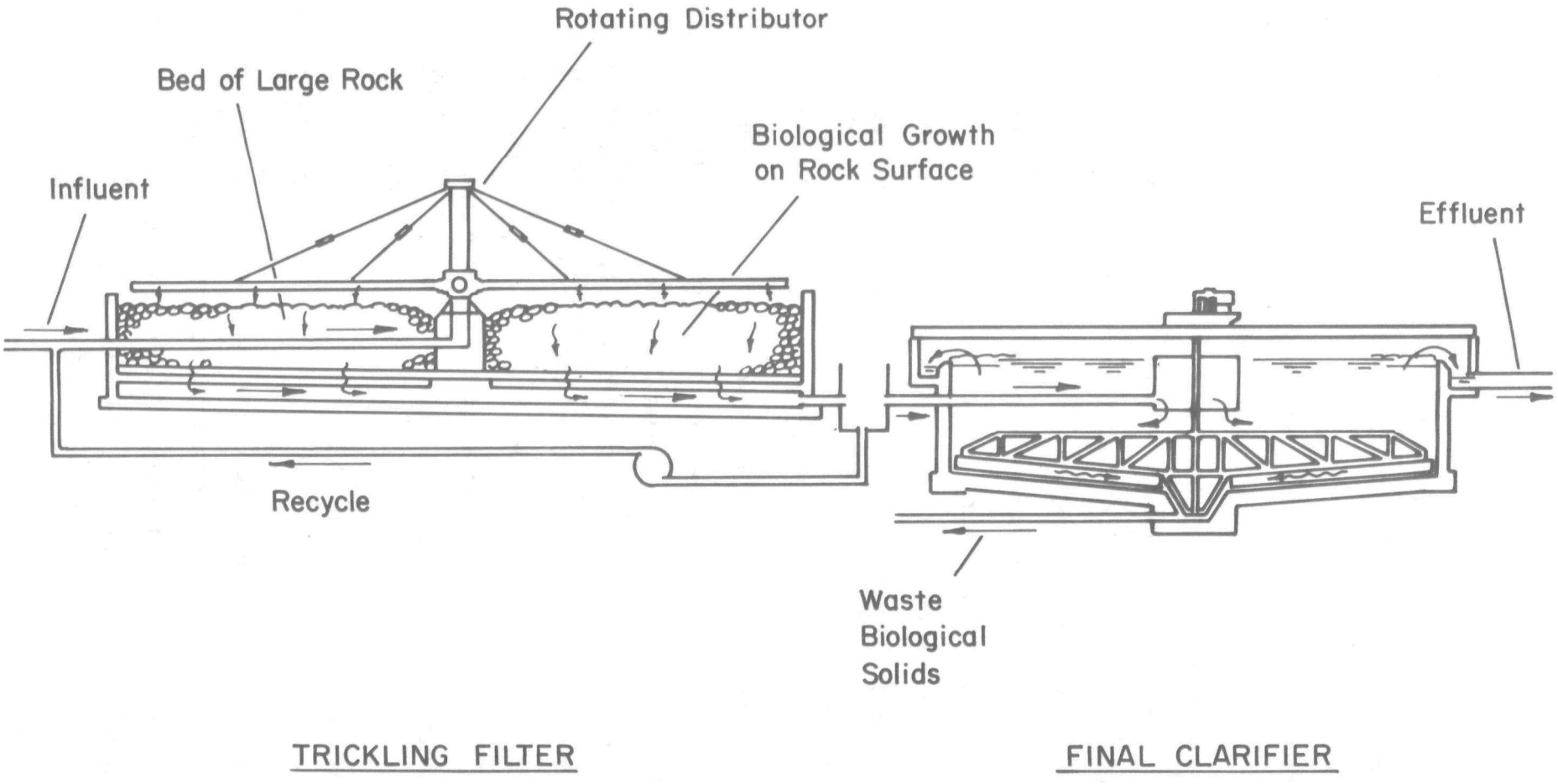

FIG. III-12 TRICKLING FILTER PLANT DIAGRAM

NUTRIENT REQUIREMENTS

Besides air and waste, a biological system needs nutrients to maintain a healthy state. Microorganisms need much the same kinds of trace minerals that humans do, but the lack of these is rarely a serious problem in waste treatment. The most common deficiencies in food processing waste are nitrogen and phosphorus. The amount of these nutrients required for a given microorganism depends on its age, while the amount of nutrients required for a treatment process depends both on the age of the organisms and the numbers of cells generated during the reduction of BOD. Conservatively, a BOC/nitrogen/phosphorus ratio of 100: 5: 1 will give an adequate amount of nutrients. As can be seen from Table III-7, most food processing wastes have a nutrient deficiency.

The effects of nutrient deficiencies show up most markedly in activated sludge plants, especially those treating wastes containing a high amount of carbohydrates. The values in the table are taken from the EPA effluent guidelines report and presumably are developed from analyses for total nitrogen and phosphorus. Most of the nitrogen found in food processing wastes is in the form of organic nitrogen which is not readily available for microorganism growth. Thus a greater amount of supplemental nitrogen is needed than the Table would indicate.

TERTIARY (ADVANCED) WASTE TREATMENT

With the exception of 2 or 3 rapid sand filter installations, tertiary treatment is not now practiced by the food processing industry (6,7). It is not expected that it will be necessary to meet 1977 EPA requirements, but tertiary processes may be required for 1983. Only those processes with

Table III-7

AVAILABLE NUTRIENTS

FRUIT AND VEGETABLE WASTEWATERS

COMMODITY	BOD/N/P RATIO	COMMODITY	BOD/N/P RATIO
APRICOTS	100/1.6/.23	ONIONS	100/3.1/.5
ARTICHOKES	100/4.4/.8	PEACH	100/1.4/.3
ASPARAGUS	100/6.5/1	PEARS	100/1/.01
BEANS	100/4.4/.8	PEAS	100/6/.7
BEETS	100/3.1/3.9	PICKLES	100/1/.2
BLUEBERRIES	100/.9/.1	(avg. sweet	
BROCCOLI	100/7.2/1	& dill)	
BRUSSELS SPROUTS	100/7.2/.7	PIMENTO	100/2.8/.3
CANEBERRIES	100/1.8/.2	PINEAPPLE	100/.6/.1
CARROTS	100/2.3/.5	PLUMS	100/.6/.1
CAULIFLOWER	100/6.8/.9	POTATO CHIPS	100/1.1/.2
CHERRIES	100/1.7/.2	POTATOES	100/2.4/.4
CORN	100/2.8/.5	PRUNES	100/.7/.2
CRANBERRIES	100/.7/.1	RAISINS	100/.7/.2
DRY BEANS	100/5.4/.6	RHUBARB	100/3.0/.5
DEHYD. ONIONS	100/2.1/.004	SAUERKRAUT	100/4/.5
FIGS	100/1.3/.2	SPINACH	100/7.7/.6
GRAPES	100/1.6/.1	SQUASH	100/3.7/.7
JAMS & JELLIES	100/.1/.01	STRAWBERRIES	100/1.6/.3
LIMA BEANS	100/5.4/.6	SWEET POTATO	100/1.3/.2
MUSHROOMS	100/7/1.9	TOMATOES	100/4/.6
OKRA	100/5/.6	ZUCCHINI	100/5/.8
OLIVES	100/1.2/.1		

Source: EPA Effluent Guidelines Development Document (7)

the greatest possible applicability are discussed here. These processes are: chemical precipitation, filtration, carbon adsorption, ion exchange, and reverse osmosis. In the discussion, the assumption has been made that any advanced waste treatment process will be treating effluent from a secondary treatment plant.

Chemical Precipitation and Sedimentation

The primary application for this step as a tertiary process is the removal of suspended solids escaping secondary treatment. The process involves the use of a coagulant to (1) form a precipitate with the waste which settles out, and (2) form a metal precipitate which "sweeps" out other collodial matter. The coagulants commonly used are lime, alum, or ferric chloride. Polymers are sometimes used as a primary coagulant, but most often as an aid.

Simplified chemical reactions illustrating the action of these coagulants are given below:

Lime

$$Ca(OH)_2 + Ca(HCO_3)_2 \rightarrow 2CaCO_3(\downarrow) + 2H_2O$$

Alum

$$Al_2(SO_4)_3 + 6HCO_3^- \rightarrow 3SO_4^= + 2Al(OH)_3(\downarrow) + 6CO_2$$

Ferric Chloride

$$FeCl_3 + 3H_2O \rightarrow Fe(OH)_3(\downarrow) + 3H^+ + 3Cl^-$$

(($\downarrow$) indicates a solid material or precipitate that settles out.)

Table III-8

TERTIARY WASTE TREATMENT APPLICATIONS

	POLLUTANT TO BE REMOVED				
Process	COD	BOD	Suspended Solids	Dissolved Salts	Refractory Organics
Carbon Adsorption	X	X	X		X
Chem. Precipitation	X	X	X	X	
Filtration,	X	X	X		
Ion Exchange	X	X		X	X
Reverse Osmosis	X	X		X	X

The overflow rate on the chemical clarifier can be from 500 to 2000 gpd/sf dependent on the coagulant used. Expected solids concentration in the sludge varies from 3 to 7 percent.

If lime is used as a coagulant, the floc is very dense and settles easily. The use of alum increases sulfates in the water. The floc is more difficult to settle and dewater than lime. The use of iron increases the chloride concentration in the water and can cause low pH problems. Chemical precipitation is, however, the most efficient way to prevent deterioration of effluent during biological plant upsets.

Filtration

Filtration is used to reduce suspended solids of collodial size--those that will not settle out. Historically, a single media was used with a filtration rate of 0.05 to 0.13 gpm/sf. This has been termed slow sand filtration. Rapid sand filtration, in use now, uses a filtration rate of 1-8 gpm/sf. In addition to single media filters originally used, dual and tri-media filters are now in use.

Filters may be classified by the following five parameters:
(1) direction of flow, (2) type of media, (3) flow rate, (4) type of head provided, and (5) cleaning method.

The types of filters used most successfully on wastewater today are downflow filters using dual or tri-media. A filtration rate of $2\frac{1}{2}$ - 5 gpm/sf is common. Cleaning is by hydraulic backwash, commonly at a rate of 15 gpm/sf. This backwash may be preceded by air backwash and assisted by surface wash. Often a filtration aid like polymer or alum is added to the feed to strengthen floc and improve solids removal. Figure III-13 shows a small package pressure mixed media filter installation.

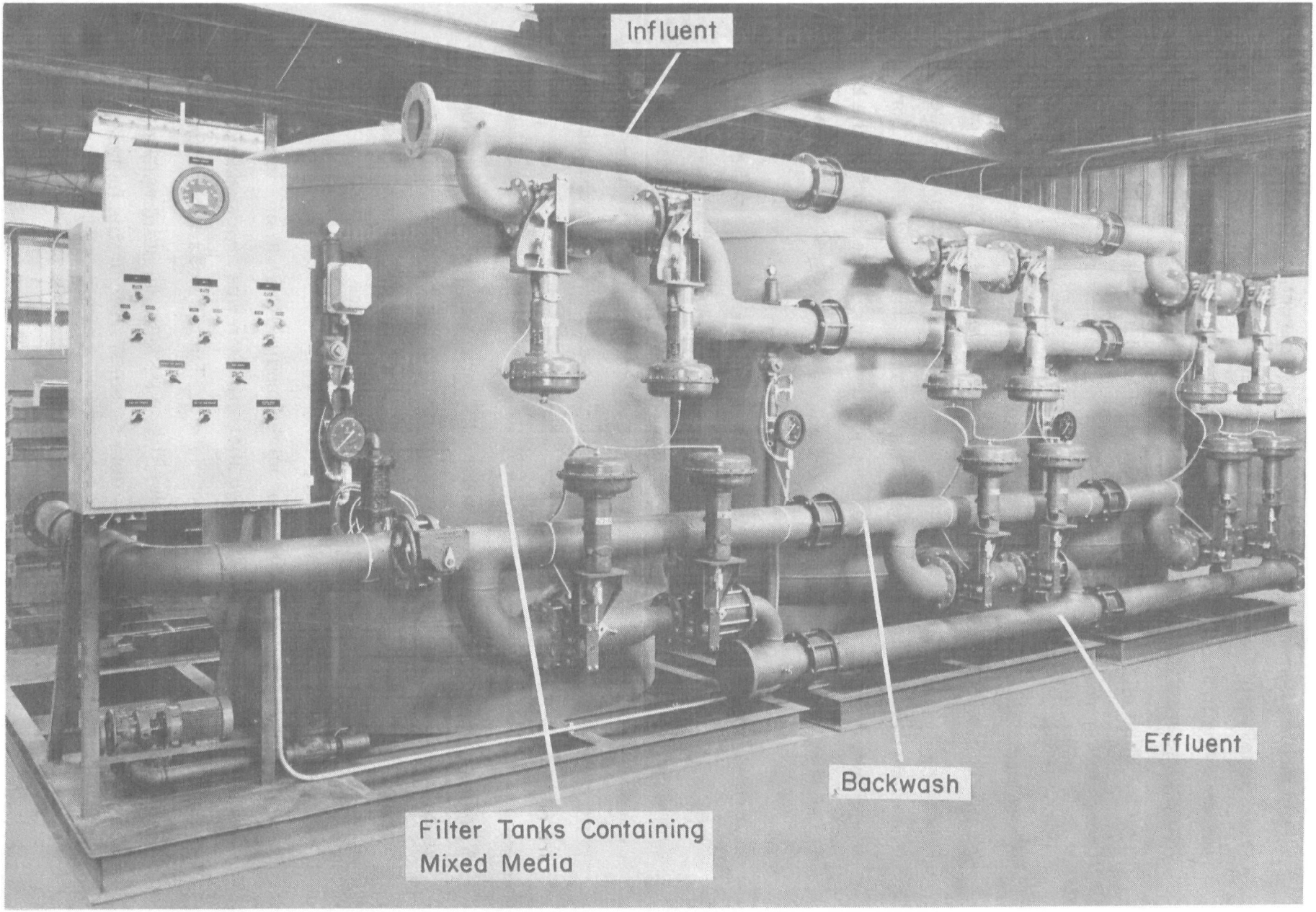

FIG. III-13 PRESSURE FILTER

(Courtesy of Neptune Microfloc)

Single media filters ordinarily remove only 70 percent of the influent solids under ideal conditions. Seventy-five to ninety percent of the head loss occurs in the first inch of depth of this media, so it is easy to see that filtration is really a surface phenomenon. In addition, single media filters tend to "blind off" at the surface, reducing filter runtime, and thus necessitating more frequent backwashing.

Mixed media (dual or tri-media) filters generally give longer runs and better removals. The media is slightly more expensive. The idea of mixed media is to provide a constant gradation of pore size in the filter from coarse on the surface to fine on the bottom. The gradation in pore size allows filtration and storage of solids throughout the depth of the bed - as opposed to a single media bed in which filtration takes place in the top.

As a rule, filters cannot be used when the influent suspended solids exceeds 100 mg/l or when the size distribution of solids changes violently so that selection of a single media type or mix is impossible. It is also usually uneconomic to use filters if the required backwash volume exceeds 10 percent of the incoming flow. A better choice would be a chemical clarifier.

A primary key to successful operation of filters is in the provision for adequate backwash. There must be provision to break up surface slime and caking. The filters should be kept wet so they do not dry out, breaking the continuity of the media.

Table III-9 gives a cost estimate for mixed media filtration of 1 mgd of secondary effluent. It was assumed that filtration was a workable option for additional removal of suspended solids. This is not always the case. Secondary effluent suspended solids may be high enough to "blind off" filters after a short run time (less than 6 hours). When this happens,

TABLE III-9
COST SUMMARY
FILTRATION

CRITERIA

- FLOW: 1 MGD AVERAGE
  2 MGD PEAK
- BOD: 1000 mg/l
- TSS: 1000 mg/l
- pH: 4.5
- SEASON: 90 DAYS
- AMORTIZATION: 10 YEARS AT 12%
- ENGINEERING, LEGAL AND CONTINGENCY COSTS INCLUDED AT 25% OF CONSTRUCTION COST
- OCTOBER, 1975 DOLLARS

SCHEMATIC

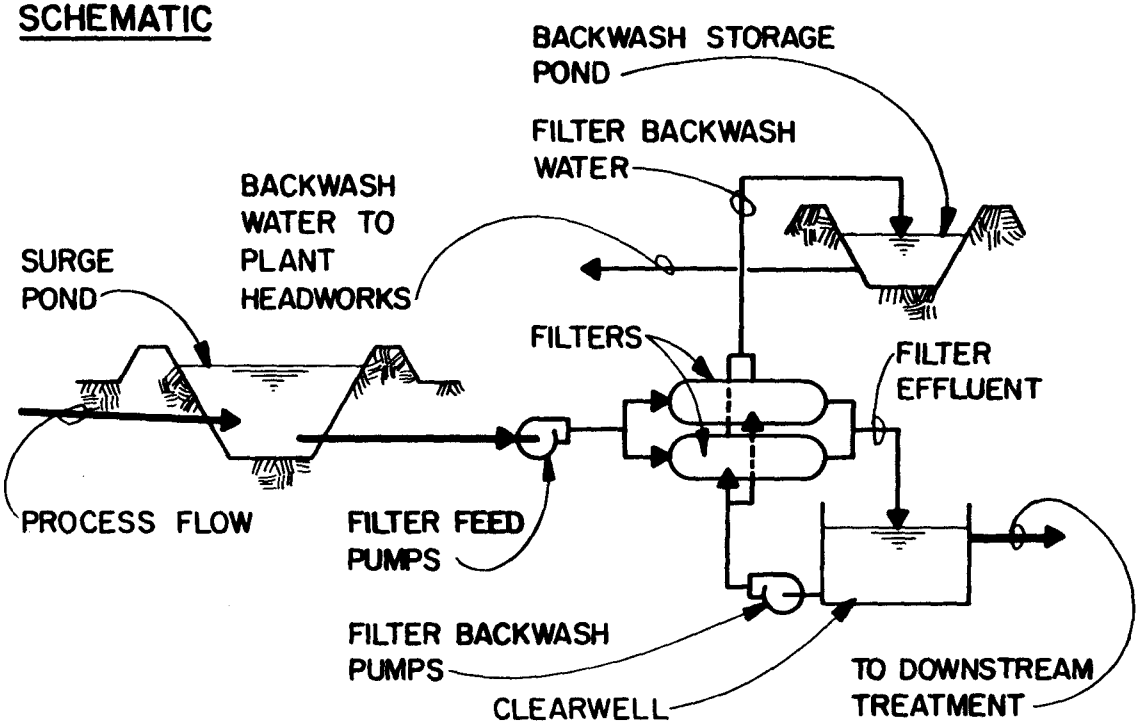

ASSUMPTIONS

- TWO PRESSURE FILTERS WITH 2.5 GPM/FT^2 APPLICATION RATE
- 18 GPM/FT^2 BACKWASH RATE
- LINED EARTHEN SURGE POND
- CONCRETE CLEARWELL

COSTS

CAPITAL COST	$271,000
ANNUAL O & M	4,000
AMORTIZED CAPITAL COST	47,960
EQUIVALENT ANNUAL COST	51,960
UNIT COST (CENTS/1000 gal.)	57.7

filter backwash volumes become so large that the secondary plant capacity must be significantly increased to handle the backwash return flow.

In addition to those shown on the table, the following assumptions in the development of the estimates should be noted:

- 2 horizontal pressure filters used
- filter rate 2.5 gpm/sf
- 150,000 gal lined earthen surge pond ahead of filters
- 60,000 gal concrete clearwell
- 60,000 gal backwash return surge pond
- polymer dose 1 mg/l

Carbon Adsorption

Carbon adsorption is employed to remove refractory organic compounds like those causing taste and odor (tannins, lignins, and ethers). It also removes residual COD, and BOD as well as insecticides, herbicides, and related components. However, very few tests have been run with activated carbon treating cannery wastewater.

Carbon adsorption can be done either by granular or powered activated carbon. The use of powdered carbon still has many problems, not the least of which is its recovery for reuse. However, the technology of granular activated carbon in columnar beds is well developed.

The influent to a granular carbon process must be low in BOD, COD, and suspended solids. The effluent from carbon adsorption can go to ion exchange, or reverse osmosis and/or disinfection.

A criterion for design is to use upflow expanded bed columns with a contact time of 20 minutes. The hydraulic rate should be between 6 to 7 gpm/sf and the granular carbon used should be an 8 x 30 mesh.

Carbon adsoprtion is the only method to remove refractory organics with the exceptions of reverse osmosis, distillation, or freezing - but these are not competitive.

As a rule, activated carbon cannot be expected to remove reducing sugars from food processing wastes. Organic acids can, however, be removed to some extent.

If there are high concentrations of BOD and COD in the influent, the column can become anaerobic and produce hydrogen sulfide. This is generally not a problem with filtered secondary effluent. At any rate, the problem can be solved by frequent backwashing, chlorination, or the addition of sodium nitrate.

Ion Exchange

There are many applications of ion exchange, from the selective removal of specific substances such as ammonia, phosphates, or nitrates, to the complete demineralization of water.

Ion exchange to remove calcium and magnesium from potable water is currently practiced by many canners for boiler water treatment. Regenerant for these softeners is sodium chloride.

The simplified equations below show the action of a typical cationic ion exchange resin, during both use and regeneration. R indicates the resin.

Use: $RNa_2 + Ca^{++} \rightarrow RCa + 2Na^{+}$

Regeneration: $RCa + 2NaCl \rightarrow RNa_2 + CaCl_2$

Demineralization of wastewater requires both cationic and anionic resins to remove cations (like sodium) and anions (like phosphates), respectively. These can be mixed in a single bed, but more often, they are set up in a series of separate beds. Pilot tests on ion exchange have been run at Pomona, California since 1965, where carbon column effluent is used as the feed water. The system contains four resin beds in series: two cationic and two anionic. The cationic resins are regenerated with sulfuric acid and the anionic with ammonia. Historically, removals have been as follows:

COD	63.0 percent
Total Dissolved Solids	86.7 percent

Thirteen percent of the volumn treated goes to waste as brine.

Pilot work by Rohm and Haas, Inc., utilizing their modified Desal Process on disinfected secondary effluent gave the following removals:

COD	83.3 percent
TDS	approximately 90 percent

No full-scale, long-term installations of ion exchange for dissolved solids reduction have been operated on wastewater. Very little work has been done on a pilot scale to test dissolved solids removal in food processing wastewater.

Three of the largest problems in the use of ion exchange are (1) in achieving efficient regeneration of the resin, (2) the disposal or recovery of the waste regenerant solution, and (3) the length of the resin life.

Reverse Osmosis

The natural process of osmosis has been known since the middle of the eighteenth century, but it was not until the 1950's that experiments were conducted in reverse osmosis. If fresh and saline water are separated by a semipermeable membrane, the natural tendency is for the fresh water to migrate through the membrane into the saline water until the concentrations of the salts on both sides of the membrane are equal. The driving force to accomplish this appears as a pressure differential called osmotic pressure. In reverse osmosis, this osmotic pressure is exceeded externally, and the flow is reversed through the membrane, leaving the salts behind and making fresh water from saline water.

The semipermeable membrane is now commercially made of a cellulose acetate. While reverse osmosis has found application in the reclamation of sea water and brackish water, use on wastewaters has resulted in severe problems due to fouling the membrane. In theory, reverse osmosis has the capacity to remove more than 90 percent of inorganic ions, and most organic matter.

The most extensive experience in reverse osmosis has been gained from pilot investigations at Pomona, California. The units there achieved the following removals from domestic activated sludge effluent:

COD	88.5 percent
TDS	92.1 percent

Twenty-five percent of the volume treated went to waste as brine, but this fraction can be reduced to 15 percent. The flux, or flow rate, through the membrane is on the order of 10 gpd/sf. Pressure used was 750 psi. For reverse osmosis to become economically attractive, a flux of 20 to 40 gpd/sf needs to be attained.

Some low molecular weight organic compounds like amines, alcohols, and acids are not removed in this process. Reverse osmosis has the greatest potential for technological improvement of any process for removing dissolved solids. Currently, though, it is the most expensive process. In addition to the need to increase the flux, the product-to=waste ratio needs to be increased and the problem of disposal of the highly concentrated brine solved.

CHLORINATION

Disinfection by chlorination is widely practiced in domestic water and waste treatment. Disinfection is required here because of the presence of disease carrying organisms, or pathogens, in the water or waste. Chlorination is also used in the fruit and vegetable processing industries for odor and slime growth control in flumes and process units.

So long as sanitary or domestic waste is kept separate from processing wastewater, there will be no need for final disinfection for pathogen removal. Some food processors are, however, disinfecting the effluent from their secondary treatment plants.

For 1983, EPA has set guidelines for effluent fecal coliform count at 400 MPN (Most Probable Number) per 100 ml (6,7). This guideline will probably not require chlorination if sanitary waste is not included in the processing wastewater. Fecal coliforms do not multiply outside the intestines of mammals. Exceptions have been noted in high carbohydrate wastewaters, such as sugar beets.

If the effluent fecal coliform count for a plant exceeds the EPA limitation, or if a local requirement is based on total coliforms, then disinfection will

be required. A cost estimate for chlorination of 1.0 mgd of secondary effluent is given in Table III-10. The critical assumptions in the estimate are given in the Table.

Chlorine also oxides BOD and some organic compounds. Thus, the additional chlorine demand of these compounds must be satisfied before adequate disinfection can occur. This has proved to be a considerable problem in stabilization pond effluent, where the algae exerts a high chlorine demand.

OPERATION AND MAINTENANCE

Regardless of the skill of the designer and the efficiency of a given treatment process, no treatment plant can operate itself. While the level of skill required varies widely depending on the process selected, every plant requires regular care and attention.

There is increasing recognition by regulatory agencies of the need for proper operation and maintenance. It may be a requirement in the future that an industrial treatment plant operator be certified. In addition, the testing laboratory performing tests to be submitted to regulatory agencies may have to also be state certified.

An excellent reference for determining staffing requirements for most treatment plants is "Estimating Staffing for Municipal Wastewater Treatment Facilities" published in March, 1973 by the Environmental Protection Agency.

Recognize in using this manual that it is oriented toward municipal treatment facilities. Frequently, in an industrial setting, fewer operating man hours are required. That is, the plant can be operated as one portion

TABLE III-10
COST SUMMARY
CHLORINATION SYSTEM

CRITERIA

- FLOW: 1 MGD AVERAGE
  2 MGD PEAK
- BOD: 1000 mg/l
- TSS: 1000 mg/l
- pH: 4.5
- SEASON: 90 DAYS
- AMORTIZATION: 10 YEARS AT 12%
- ENGINEERING, LEGAL AND CONTINGENCY COSTS INCLUDED AT 25% OF CONSTRUCTION COST
- OCTOBER, 1975 DOLLARS

SCHEMATIC

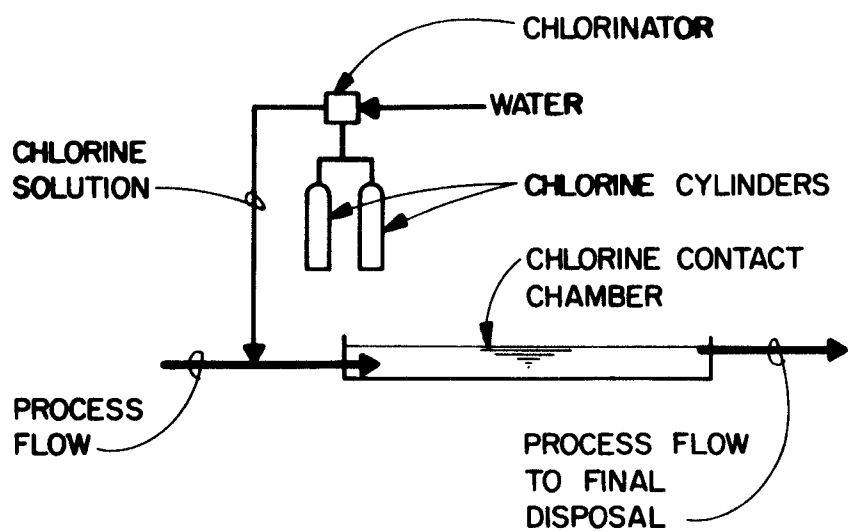

ASSUMPTIONS

- CONCRETE CHLORINE CONTACT CHAMBER WITH 1 HOUR DETENTION TIME AT AVERAGE FLOW
- CHLORINE DOSAGE AT 10 mg/l
- CHLORINE COST AT 27.5 CENTS/POUND
- SMALL CHLORINATION BUILDING INCLUDED

COSTS

	$
CAPITAL COST	38,000
ANNUAL O & M	2,800
AMORTIZED CAPITAL COST	6,725
EQUIVALENT ANNUAL COST	9,525
UNIT COST (CENTS/1000 gal.)	10.6

of the total operating plant and can use the same maintenance crews, cleanup crews, spare parts and inventory, engineering and technical staff, as the rest of the plant.

To achieve required removals a biological treatment plant must be started up (about 2 to 4 weeks) before the start of the pack. Conversely, the plant must be run for thirty days after the end of the season to completely digest and dewater the remaining sludge.

Finding adequate qualified staff can be particularly difficult in a seasonal food processing industry. Two options to an industry's staffing its own plant are the following:

- Use an outside consulting service with expertise in plant operation
- Contract with the local public agency for operation of the treatment facility.

Chapter IV
LAND TREATMENT AND DISPOSAL

Land disposal or treatment is the application of wastewater onto land by a conventional irrigation procedure. Treatment is provided by natural processes as the effluent moves through the "filter" provided by the cover crop and soil mantle. Part of the water is lost to the atmosphere by evapotranspiration; part to surface water by overland flow; and the remainder percolates to the groundwater system. The method of application, the site, and the loading rate determine the percentage of flow to each destination.

PROCESSES

Four processes have been used successfully for land treatment and disposal of wastewater. These four processes (described in Table IV-1) are overland flow, irrigation, high rate irrigation, and infiltration recharge. By far, the majority of canneries use some kind of high rate irrigation by spray nozzles.

The objective and characteristics of each of the four processes are distinctly different. The most suitable process depends upon the available characteristics of the site and the type of waste to be applied. Overland flow is especially suited to the treatment of wastewaters high in BOD and suspended solids, such as from tomato processing. Removal efficiencies greater than 90% have been reported for processing plants using overland flow. The infiltration-percolation process is least suitable for treatment and disposal of high BOD and suspended solids wastes because the suspended solids are forced to infiltrate the soil, allowing little contact time with air.

Table IV-1

LAND TREATMENT AND DISPOSAL PROCESSES

Process	Objective	Suitable Soils	Dispersal of Applied Water	Impact on Quality of Applied Water
Overland flow	Maximize water treatment. Crop is incidental.	Slow permeability and/or high water table.	Most to surface runoff. Some to evapotranspiration and groundwater.	BOD and SS greatly reduced. Nutrients reduced by fixation and crop growth. TDS increased.
Irrigation	Maximize agricultural production.	Suitable for irrigated agriculture.	Most to evapotranspiration. Some to groundwater; little or no runoff.	BOD and SS removed. Most nutrients consumed in crop or fixed. TDS greatly increased.
High Rate Irrigation	Maximize water treatment by evapotranspiration and percolation with crop production as a side benefit.	More permeable soils suitable for irrigated agriculture; may use marginal soils if coarse texture.	Evapotranspiration and groundwater; little or no runoff	BOD and SS mostly removed. Nutrients reduced. TDS substantially increased.
Infiltration-Percolation	Recharge water or filter water; crop may be grown with little or no benefit.	Highly permeable sands and gravels.	To groundwater some evapotranspiration; no runoff.	BOD and SS reduced. Little change in TDS.

The irrigation process is most effective for removing the nutrients in wastewater. The application rate is limited so that the nutrient loading does not exceed the crop nutrient requirement. The nutrients are removed from the site by crop harvest. Some nutrients are used by crops in overland flow, but most will be carried away in the runoff water. Most of the nutrients are carried into the groundwater or subsurface drainage system in the infiltration-percolation process. Little, if any, plants are grown on the site for nutrient uptake.

APPLICATION METHODS

Three mothods commonly used for application of wastewater are, (1) surface, (2) drip (or trickle), and (3) sprinkler irrigation. With the surface irrigation method, water is distributed in furrows or small channels or by flooding. With drip irrigation, water is applied through small holes (emitters) spaced along the supply line. In sprinkler irrigation, water is sprinkled onto the land to simulate rainfall. Sprinkler and surface irrigation are most commonly used for wastewater application. Drip irrigation is generally impractical for use with wastewater because of the need for very low levels of suspended material to prevent clogging of the holes.

The selection of an irrigation method depends on soil characteristics, crop, operation, maintenance, topography, costs, water supply, and need for control of runoff. Each method has distinct advantages.

Surface irrigation depends on soil permeability and soil uniformity for an even distribution of wastewater. Distribution of water by sprinkler irrigation is controlled by the selection and design of the equipment used. If soil conditions are suitable, surface irrigation normally offers economic advantages in power and hardware requirements.

SITE CRITERIA

Many factors must be considered in selecting a site for agricultural disposal of the waste effluent:

- The soil and topography must be suitable for the disposal process (overland flow, sprinkling, ponding).
- Areas with continual winds (greater than 10 mph) cannot be used without great allowances for sprinkler droplet drift.
- Slopes must not exceed 15 percent.
- The site must not have shallow groundwater depths (less than 4 to 5 feet)
- The site should be a short distance from the processing plant, and it must be easily accessible.
- The site preparation requirements must not be prohibitive
- The site should be situated to allow expansion.

PRETREATMENT REQUIREMENTS

Pretreatment of wastewater before land application is normally necessary. Screening is often used to separate solids from the wastewater and to aid in distribution and application of wastewater. Screens (10 to 20 mesh) are necessary to prevent sprinkler nozzle clogging. Silt and other suspended particles which may hinder operation of the distribution and application system should be removed. The pH of the wastewater must be controlled for application on land. Wastewater pH outside the range of 6.4 to 8.4 may render some nutrients (phosphorus and the micronutrients) inaccessible by plants.

LOADING CONSTRAINTS

Loading rate is subject to several constraints. The rate of water moving into and through soil depends on its capacity for infiltration and percolation. Discharge quality limits placed on deep percolation to groundwater or return flow to surface streams may require a limited loading rate or extensive pretreatment. A soil-crop system has a finite capacity for removal of various pollutants. If this capacity is exceeded, the system will eventually fail, odors will develop and pollution of groundwater or a nearby stream can result.

The various constraints on loading may be classified as either hydraulic or treatment constraints:

Hydraulic Constraints

- Infiltration capacity of the soil
- Permeabilities of the root zone
- Permeabilities of the underlying soil

Treatment Constraints

- Capacity of the soil to filter and assimilate suspended solids
- Capacity of the soil to remove and oxidize BOD
- Capacity of the soil to remove major plant nutrients (nitrogen, phosphorus and potassium)
- Sensitivity of the soil to other wastewater characteristics such as salt content, sodium adsorption ratio, and pH

Hydraulic Constraints

The infiltration capacity of a soil is the rate at which water can be applied without runoff. Previous erosion or lack or a dense vegetative cover will

reduce infiltration capacity and require a reduction in application rates. The infiltration capacity of the soil will influence the choice of irrigation methods. Infiltration rate limits the instantaneous rate of application, but only in rare instances will it limit the total seasonal application.

The permeability of the soil will determine the total of effluent and precipitation that can be applied. In a year with high rainfall, the amount of effluent which can be applied must be reduced.

Three to five feet of aerated soil is required in the root zone. To provide sufficient treatment of the applied effluent, the natural drainage capacity of the soil depends on the permeability, the depth of wetted materials, and the hydraulic gradient.

If no run-off is allowed, the maximum hydraulic loading is the sum of the soil moisture depletion by evapotranspiration, plus the quantity of waste which can be transmitted through the root zone. Maximum hydraulic loadings less evapotranspiration under ideal conditions for different soils are given in Table IV-2.

TABLE IV-2

ESTIMATED MAXIMUM HYDRAULIC LOADING OF WASTEWATER EFFLUENT FOR VARIOUS SOIL TEXTURES (IDEAL CONDITIONS)

	MOVEMENT THROUGH THE SOIL ROOT ZONE*	
	INCHES/DAY	INCHES/YEAR
Fine sandy	15.0	300
Sandy loam	7.5	180
Silt loam	3.5	90
Clay loam	1.5	40
Clay	0.5	10

*Does not include evapotranspiration

The allowable loading rate for infiltration-groundwater recharge is dependent on the soil and surface geology. Recharge of a water-bearing aquifer will also be dependent on the permeability of the aquifer itself. If recharge of the aquifer is not an objective, then drainage will likely be required to control percolation to the water table.

Treatment Constraints

Biochemical oxygen demand (BOD) is associated with both suspended solids and dissolved organic material. The BOD associated with suspended solids will remain close to the surface where the soil organisms will have access to atmospheric oxygen to break the material down. The BOD in the dissolved organic material will percolate through the unsaturated zone of the soil and, under aerobic conditions, be removed during percolation. Soils have remained aerobic under loading rates of hundreds of pounds per acre with the percentage removals in the upper 90's. Table IV-3 lists typical BOD loading rates for various soil conditions.

TABLE IV-3

BOD LOADING RATES

	lbs/acre/hr	lbs/acre/day
Fallow soil with no fresh organics	1-2	36
Fallow soil following addition of organic residues	2-4	72
Soil with growing plants	3-6	108
Estimated recommend maximum BOD load to be added on well aerated soil		100

Source: American Society of Agronomy, "Irrigation of Agriculture Lands." (1)

Installations with loading rates up to 400 pounds per acre per day have been successful (2).

Any clogging of soil is principally due to a lack of complete biological breakdown by organisms in an anaerobic environment. Aerobic conditions will be maintained with intermittent application of effluent, thus minimizing the chance of soil clogging. In the event that a problem of mechanical clogging due to other suspended particulates does occur, mixing of the soil by harrowing or disking should effectively correct it. There is no known instance of a soil structure being permanently damaged by the addition of inert materials, such as clay, if periodic mixing of the soil is practiced.

Applied loadings of organic suspended solids average about 70 pounds per acre per day. Some installations have loaded suspended solids up to 200 lbs/acre/day (2).

Nitrogen and phosphorus are the two main problem nutrients in wastewater. Nitrate, the very leachable form of nitrogen, is used by crops. Removal of the grown crops is a major method of removing nitrogen in the land treatment process. Denitrification, the conversion of nitrate nitrogen to nitrogen gas by anaerobic bacteria, will remove significant amounts of nitrate if the necessary aerobic condition and carbon energy source requirements are met.

Typically, the total nitrogen found in fruit and vegetable wastewaters is mostly organic nitrogen. All of this nitrogen is not immediately available for plant use. Generally the "mineralization rate" of organic nitrogen is such that 20 to 30 percent of it becomes available for plant use in the first year, 5 percent in the second, 2 percent in the third, and so on.

Since the amount of total available nitrogen is low compared to the amount of BOD, the controlling parameter in sizing a disposal site for food processing wastewater is usually BOD, not nitrogen. Nitrogen is, thus, only a concern when pollution of underlying groundwater with nitrates is a possibility.

When groundwater quality is of concern, the nitrogen loading rate must be limited so that a balance is reached between the amount of applied, the amount removed by treatment and cropping, and the concentration allowed to reach the groundwater. Common applications are 100-150 pounds per acre per year of available nitrogen.

Phosphorus is removed by crops, cation exchange, precipitation, and adsorption on iron and aluminum oxides. Little movement of phosphorus through the soil system with the drainage water will occur as long as the finite capacity for phosphorus removal is not exceeded. Phosphorus removal capacity is determined by field measurement.

Caustic peeling processes used for such commodities as potatoes and peaches produces wastes somewhat high in sodium. Wastes with high sodium content can be damaging to soil permeability. The effect of sodium on the soil is measured by the sodium adsorption ratio, SAR, the ratio of sodium (Na) ion to calcium (Ca) and magnesium (Mg) ions, or:

$$SAR = \frac{Na}{\sqrt{\frac{Ca+Mg}{2}}}$$

where Na, Ca, and Mg, are measured in equivalents.

The soil SAR must generally not exceed 6.0 to 9.0 depending on the soil. Should the SAR rise to unacceptable levels, gypsum ($CaSO_4$) can sometimes be applied to lower the SAR.

Some wastewater may contain certain constituents which will retard plant growth or be a potential health hazard. Table IV-4 lists recommended concentration limits of these constituents for continuous irrigation on all soils. The limits are for non-sandy, non-acidic soils.

SYSTEM OPERATION AND MANAGEMENT

The major tasks involved in operating a land treatment system include: (1) maintaining the proper application rate and frequency, (2) managing the soil and cover crop, and (3) monitoring the performance of the system. Scheduling of wastewater applications will be weather dependent. During wet months, the amount that can be applied will depend upon the daily precipitation. Applications will also have to be coordinated with harvest. For the most efficient operation of the system during the wet months, irrigation should be scheduled on a daily basis to be able to incorporate the daily measurement of precipitation and not exceed the application criteria. Thus, a storage pond is often required to hold the wastewater during times when it cannot be disposed. This pond must be adequately aerated to prevent odors.

Experience with potato wastewaters has shown that spray irrigation facilities can be operated during winter months when icing of the field occurs. Ice is allowed to accumulate in the field, and finally melts during the spring thaw. The thaw is usually gradual enough so that BOD loading rates are not greatly exceeded and there are no odors. If the thaw is fast, or if there is unseasonably warm weather, odors may develop.

Proper soil management is required to maintain the infiltration rate to prevent erosion. Methods to accomplish this include establishment of a healthy cover crop and utilization of general soil conservation practices.

TABLE IV-4

RECOMMENDED MAXIMUM LIMITS OF INORGANIC CONSTITUENTS FOR IRRIGATION WATER

Inorganic Constituents	Recommended Limit for Irrigation on All Soils
Aluminum, mg/l	5.0
Arsenic, mg/l	0.10
Beryllium, mg/l	0.10
Boron, mg/l	0.50
Cadmium, mg/l	0.01
Chloride, mg/l	70.0
Chromium, mg/l	0.10
Cobalt, mg/l	0.05
Copper, mg/l	0.20
Fluoride, mg/l	1.0
Iron, mg/l	5.0
Lead, mg/l	5.0
Lithium, mg/l	2.5
Manganese, mg/l	0.20
Molybdenum, mg/l	0.01
Nickel, mg/l	0.20
Selenium, mg/l	0.02
Vanadium, mg/l	0.10
Zinc, mg/l	2.0
Sodium Absorption Ratio	6.0-9.0
pH	6.4-8.4

Source: University of California, "Guidelines for Interpretation of Water Quality for Agriculture". (17)

Grasses and other crops keep the infiltration rate high by preventing droplets from sprinkler irrigation from puddling and sealing the surface. A good cover crop is also necessary to remove nutrients from the soil treatment system. The crops must be periodically harvested and physically removed from the site. Monitoring the wastewater characteristics, the soil, the crop, and the runoff of groundwater, are all very important to successful operation of a land treatment system. Monitoring these items will give forwarning of developing problems. Failure in any part of the system: wastewater quality, soil infiltration, crop growth, or groundwater drainage, can quickly result in the failure of the whole treatment and disposal system.

COSTS OF ALTERNATIVE APPLICATION METHODS

A comparison of costs for different types of land wastewater treatment systems is given in Table IV-5. The characteristics of the available sites will often dictate the type of treatment system that will be feasible.

Table IV-5
Comparison of Capital
and Operating Costs for 1-mgd Spray Irrigation
Overland Flow, and Infiltration-Percolation Systems[a]

Cost Item	Spray Irrigation	Overland Flow	Infiltration-Percolation
Liquid loading rate, in/wk	2.5	4.0	60.0
Land used, acres	103	64	--
Land required, acres[b]	124	77	5
Capital costs			
Earthwork	12,700	79,100	12,400
Pumping station	61,800	61,800	0
Transmission	163,200	163,200	163,200
Distribution	178,000	79,100	6,200
Collection	0	7,400	37,100
Total capital cost (excluding land)	415,700	390,600	218,900
Amortized cost[c]	73,600	69,100	38,700
Annual operating cost			
Labor	12,400	12,400	9,300
Maintenance	24,000	14,800	4,300
Power	7,200	7,200	2,200
Total operating cost	43,600	34,400	15,800
Total equivalent annual cost	117,200	103,500	54,500
Total cost, ¢/1,000 gal.[d]	130.2	115.0	60.6

a. Updated estimate for October 1975 dollars, ENR index 2300, from 1973 ENR of 1860.
b. 20 percent additional land purchased for buffer zones and additional capacity
c. 12%, 10 year life
d. 90-day season assumed, hence annual flow is 90 million gallons.

UPDATED FROM: Wastewater Treatment and Re-use by Land Application
Prepared for Office of Research and Development, U.S. Environmental Protection Agency, (12)

Chapter V
SOLIDS DISPOSAL

SOURCES AND NATURE OF SOLIDS

Because of the nature of food processing, a great many solids are generated from in-plant processing. These solids, or "residuals" may exceed the mass of solids generated with full treatment of the cannery effluent.

The handling and disposal of the cannery and waste treatment solids varies not only according to the characteristic of each but also as to the governmental classification of the solids. Currently, transportation and ultimate disposal of waste solids from treatment plants are more regulated than waste solids generated in the canning process.

In Plant Solids (Residuals)

It is estimated that only 20 to 30 percent of an original vegetable plant is finally used for human consumption. Some of this residue is left behind in the field during harvest, but a large portion is generated in processing. Table V-1 lists estimates developed in 1971, of the percentage of raw product that shows up as solid waste, or residuals, in food processing. The table also shows the amount of the total solid waste that is used as a by-product, and the amount that is finally handled and disposed of as a solid waste. By-product utilization is primarily for animal feed, but some is also used in the production of charcoal and vinegar. None of the waste is reprocessed and used for human consumption.

Table V-1

PERCENTAGE OF SOLID WASTE

PRODUCED IN FOOD PROCESSING

Product	Total Waste Produced	Utilized as By-Product	Handled as Solid Waste
Apples	28%	19%	9%
Beans, green	21%	10%	11%
Beets, carrots	41%	21%	20%
Citrus	39%	38%	1%
Corn	66%	62%	4%
Olives	14%	12%	2%
Peaches	27%	9%	18%
Pears	29%	9%	20%
Peas	12%	8%	4%
Potatoes (white)	33%	29%	4%
Tomatoes	8%	2%	6%
Vegetables (misc.)	22%	9%	13%

These are average percentages of total incoming raw product.

Source: "Waste Disposal Control in the Fruit and Vegetable Industry" Noyes Data Corp. 1973

The use of solid waste in livestock feed is not possible for the majority of canneries. The great majority of solid waste used for feed is generated by the citrus, corn, pineapple and potato industries. Because of the magnitude of the total production of these four industries alone, the amount of cannery wastes that are recovered nationwide for use in animal feed is very high -- on the order of 75 percent of the total waste generated.

In most of the other industries, solid waste is disposed in landfill operations. It is worth noting why these four industries can use their residuals in livestock operations:

1. The waste solids are generated over a long season -- up to a year's length. The exception here is corn, but corn can be ensiled and stored for later use. Most other commodities are processed over a very short season, and the waste cannot be stored for any reasonable length of time without decomposing.
2. The products are produced in regions where feeding of livestock in quantity is common.
3. With the exception of potatoes, all the waste from these four commodities are produced dry. Screenings and primary clarifier sludge are used in the potato industry.

In theSalinas Valley of California, trimmings from the vegetables grown there are used in primary feeding operations of cattle. Such items as asparagus, broccoli, lettuce, and artichoke trimmings and process screenings are used in the feeding operation. The final feeding is done entirely with tailored grain mixes. The operation is, however, a rarity among food processors of this type.

Most canneries do not fit the three criteria mentioned above for the citrus, corn, pineapple and potato industry. These canneries must resort to some type of land disposal. Land disposal is deceptively simple. If sites are mismanaged or improperly designed, immediate problems such as odors and breeding of insects may develop. After some time, say five years, other problems may develop. Pollution of ground water, the destroying of original vegetation or destroying the ability of the soil to support any plant life are disasters in land disposal that have occurred.

Treatment Plant Solids

Depending on the processes used and the extent of treatment, solids generated in waste treatment can be quite significant. Table V-2 gives a listing and the characteristics of the general types of solids produced in waste treatment. There are two main categories: screenings and sludges. Sludges are generated in primary, secondary, and, to some extent, tertiary treatment processes.

Screenings

The amount of screenings vary according to the nature of the waste and screen mesh size. Screenings are wet and will drain water if allowed to stand. The drainage of water does not reduce the volume of screenings to be hauled away, but makes them easier to handle and acceptable in more landfill sites.

Primary Treatment

Primary treatment wastes are: sludge from the bottom of the clarifier; scum from the top of the clarifier; and the float from the top of dissolved air flotation units.

Table V-2
TREATMENT PLANT SOLIDS CHARACTERISTICS
FRUIT AND VEGETABLE WASTEWATERS

TYPE OF TREATMENT	SLUDGE CHARACTERISTIC
Primary	Percent solids: 1-4 percent. A higher percentage of inerts in the sludge can raise the percentage of solids to 20-40 percent with the sludge looking thinner.
Biological Sludge	0.5-1 percent solids from the clarifier underflow. Because of the low specific gravity of the solids, the sludge appears to be very thick.
Pure Oxygen Activated Sludge	1-2 percent solids.
Lime Clarifier Sludge (Tertiary)	7 percent solids.

Scum is usually not a problem in food processing wastes. It is unsightly, but the volumes are small because of the low amounts of oil and grease in the waste. Dissolved air flotation float commonly has a total solids concentration of about four to six percent, and is not particularly difficult to pump, depending on the kind of product being run in the cannery. Sludge from the bottom of clarifiers can be very difficult to pump, depending on the kind of product being run in the cannery. For example, field dirt from tomatoes and potatoes can be thickened to about 40 percent solids, which can be pumped, but only with positive displacement pumps. This same mud will only settle and concentrate to about 20 percent solids in a tank or pond without a thickenting rake. Purely organic sludge from a primary clarifier will probably not exceed a concentration of three to five percent solids.

The actual mass (pounds/day) of sludge or float from primary treatment will be a function of the raw product. The volume (gallons/day) that contains this mass, however, will be a function of both the product run and the primary treatment process used.

Secondary Treatment

The masses of sludges generated by secondary treatment processes are a function of the treatment process used, the BOD load, and the inert suspended solids load. The biological processes used in secondary treatment all produce sludge in the reduction of BOD.

In biological treatment, dissolved BOD is transformed into microorganism cellular matter which then settles in the final or secondary clarifier. The largest sludge producing processes are the high rate processes described in Chapter III. Of these, the activated sludge process produces the most sludge. In fact, a good generalization would be: the better the treatment obtained, the more sludge generated.

Stabilization ponds and aerated ponds take several years to accumulate enough sludge on the bottom of the ponds to require removal. On the other extreme, an activated sludge plant, operating at a very high rate, requires daily removal of a significant quantity of sludge to keep treatment efficiency high.

An activated sludge plant, operating at a high rate (or low sludge age) will require the removal of up to 0.6 pounds of microorganisms for each pound of BOD treated. It's not difficult to see that treatment of food processing wastes, with BOD loadings as high as ten times those of domestic waste, leads to significant sludge handling and disposal problems.

Sludge from secondary treatment systems is still biologically active, and if let alone will naturally putrefy. This may result in an intolerable odor problem for a cannery. If the sludge contains no wastes of human origin, it may be possible to spread and dry the sludge quickly on a disposal site or agricultural land, and then plow it into the soil.

If the sludge is not handled in this manner, it must be stabilized. The remaining organics must be oxidized, "burnt up", prior to disposal to a landfill site or a reclamation project.

Typically, secondary sludge does not dewater as well as primary on vacuum filters or centrifuges. Raw, undigested secondary sludge has a total solids content of only one-half to one percent. In addition, the cellular matter itself in the sludge is only fifteen percent solids. Unless the cells membranes are ruptured, pure secondary sludge cannot be dewatered beyond fifteen percent solids.

Tertiary Treatment

With the exception of chemical clarification, none of the tertiary treatment processes discussed in the previous chapter generate a solid waste. Reverse osmosis and ion exchange produce a waste brine or concentrate, which is probably best handled by evaporation and disposal in a landfill. Spent carbon in columns, if not regenerated, becomes a solid waste, but is usually acceptable for disposal in a sanitary landfill. Backwash water from filters is usually stored and pumped at a constant rate back to the treatment plant headworks.

Sludge from tertiary chemical clarifiers varies in handling ability according to the coagulants used in the treatment process. Lime sludge is quite dense, about seven percent solids, and can be dewatered rather well on vacuum filters or centrifuges. Lime sludge lines should be oversized to allow for scaling in the lines and ease of cleaning. Alum sludge, on the other hand, is quite light and gelatinous and can prove to be quite difficult to dewater. Vacuum filters seem to do best with this sludge. Ferric chloride sludge are usually not difficult to dewater, but they are messy. Vacuum filters are usually used with ferric sludges.

Unless a secondary plant is upset, tertiary chemical clarifier sludge will not contain much organics, so there is usually no need to further stabilize the sludge against putrefication. Most municipal treatment plants that use a tertiary chemical clarifier either incinerate all the raw sludge, or digest the biological sludge, mix it with the chemical sludge, and then incinerate them together.

Solids Handling

Table V-3 gives a listing of the available options most commonly used in the handling of waste solids from canneries. The options apply best to

Table V-3

SOLIDS HANDLING OPTIONS

Digestion	Thickening	Dewatering	Disposal
Anaerobic	Gravity	Vacuum Filter	Sanitary Landfill
Aerobic	Dissolved Air Flotation	Centrifuge	Disposal on Soil
	Centrifuge	Pressure Filter	Animal Feeding*
		Dewatering Belts	Composting
		Drying Beds	

*Use of waste activated sludge for animal feeding operation is not approved by the U. S. Food and Drug Administration

waste solids from waste treatment operations. Waste solids generated in the cannery are commonly disposed in three ways: (1) disposal in a landfill, (2) spreading on fallow agricultural lands, or (3) used in animal feeding operations.

Solids treatment and disposal from waste treatment operations comprises a substantial fraction of the capital cost of treatment and the annual operation and maintenance (see Tables III-6A and -6B).

DIGESTION

There are two types of biological sludge digestion processes. Anaerobic digestion has been practiced for many years at municipal treatment plants across the country. The anaerobic system is sensitive and prone to upset. It must be heated for good operation. The tanks must be covered and the generated methane gas safely handled--either as a fuel or just burnt (flamed). A well operating anaerobic digester will reducd about fifty to sixty percent of the volatile, or organic fraction, in the sludge. It operates well on domestic primary sludge alone. Few cannery sludges have been digested without combination of domestic waste. The required retention time of sludge in a digester is about twenty days when maintained at 90 degrees Fahrenheit.

Aerobic digestion makes more sense for small plants (treating less than 5 mgd), or for seasonally operated plants like those treating cannery waste. Aerobic digestion allows the metabolic processes of the microorganisms used in treatment to continue, but in the absence of food (BOD). The organisms continue metabolizing at decreasing rates (termed "endogenous respiration") in the digester. Aerobic digestion is not as efficient as anaerobic, reducing only up to 40 percent of the volatile matter. Detention times of the sludge in

this kind of digester is only 15 to 20 days. Enough air is supplied to the open digester, either by diffusion or mechanical means, to satisfy the oxygen requirements of the organisms.

Regardless of the method of digestion chosen, it should be realized that the digester will have to be kept running for twenty to thirty days after the end of the processing season to stabilize the remaining sludge.

THICKENING

Thickening is used to reduce the volume of sludge so a smaller dewatering device can be built (vacuum filter), or to control sludge thickness for optimal operation of the dewatering devices.

Three units are commonly used for thickening sludge: gravity thickeners, dissolved air flotation thickeners, and centrifuges.

Dissolved air flotation thickeners are the same as air flotation clarifiers, but operated at higher solids loading rates. Gravity thickeners look like ordinary clarifiers, with the exception that the clarifier rake is changed to rotate faster, and gently agitate the sludge. Representative design criteria for thickeners are given in Table V-4.

DEWATERING

Dewatering lowers water content of sludges to facilitate disposal, whether to landfill or to incineration. Before sludge can be hauled in open trucks, it must be dewatered so that it no longer flows. A solid sludge is also easier to spread in a landfill operation. Prior to incineration, sludge must be concentrated so that it will support combustion. The exact point of allowable

Table V-4

DESIGN CRITERIA SOLIDS HANDLING DEVICES

FRUIT AND VEGETABLE WASTEWATERS

DIGESTION	
ANAEROBIC	
Retention Time	20-30 days, depending on whether the digester is heated.
Ideal Temperature	90-100 degrees Fahrenheit.
Total Solids Reduction	45-50 percent
Methane Production	8-12 cf/lb volatile solids.
Solids Loading	Standard Rate: 0.03-0.10 lb volatile solids/cf/day High Rate: 0.1-0.4 lb volatile solids/cf/day.
AEROBIC	
Retention Time	10-20 days, depending on the sludge age of the activated sludge system and the ambient temperature.
Solids Loading	0.1-0.2 lb volatile solids/cf/day.
Oxygen Requirement	1.5-2.0 lbs/lb of volatile solids destroyed.
THICKENING	
GRAVITY	
Solids Loading	4-15 lbs solids/sf/day, depending on the concentration of the incoming sludge.
Overflow Rates	400-900 gpd/sf
DISSOLVED AIR FLOTATION	
Solids Loading	1.5-2 lbs/sf/hour
Overflow Rates	1,400-5,000 gpd/sf

Air to Solids Ratio	0.01-0.1 lb/lb
Recycle Rate	1-3

DEWATERING

VACUUM FILTERS

Common Yields	1-4 lbs of dry solids/hour per sq ft of drum area for organic material. 8-10 lbs/hr/sf for properly conditioned silt and clay.
Cake Total Solids Content	11-13 percent for waste activated sludge. 20-70 percent for silt or clay.
Chemical Conditioning Dose	
Lime	5-10 percent of the sludge dry solids
Ferric Chloride	2-4 percent
Polymer	1/4-2 percent

CENTRIFUGES

Cake Total Solids Content	4-25 percent, depending on the use of chemicals and type of centrifuge. For waste activated sludge, the solids content achieved is Solid bowl type: 8-10%, Disk nozzle type: 4-5% Basket type: 7-10%
Solids Capture	60-70 percent without chemicals. Up to 95 percent with chemicals.
Common Capacities	10-300 gpm.

moisture content for incineration must be determined separately for each sludge and incinerator. Typically, allowable moisture contents vary from 70 to 80 percent (20 to 30 percent TS).

There are several kinds of dewatering units available. The most common are vacuum filters and centrifuges, but filter presses and capillary action devices may be used.

Vacuum Filters

A common type of vacuum filter is shown on Figure V-1. The sludge is pumped into a vat or pan at the base of the filter. The sludge level is usually high enough to submerge the filter drum to about thirty to forty percent of the diameter of the drum. A vacuum applied to the drum (about 10 to 20 inches of mercury) picks up the sludge and forms a cake during the time the drum is submerged. As the drum rotates out of the sludge, air is pulled through the sludge cake, drying it so that it cracks and falls off the filter cloth before the cloth is resubmerged.

The yield, or rate of sludge dewatering, of a vacuum filter is about 2 to 10 pounds of dry sludge per hour for each square foot of filter drum area.

To achieve this yield for most secondary sludges, and some primary ones, the sludges must be conditioned by the addition of chemicals. Although the addition of chemicals to the sludge can solve a lot of problems with filtration, the key to successful filter operation is proper thickness or dryness of the incoming sludge.

Most problems experienced with vacuum fliters operating on secondary biological sludge stem from lack of sufficient drying of the filter cake. With insufficient drying, the cake will not discharge from the cloth, and

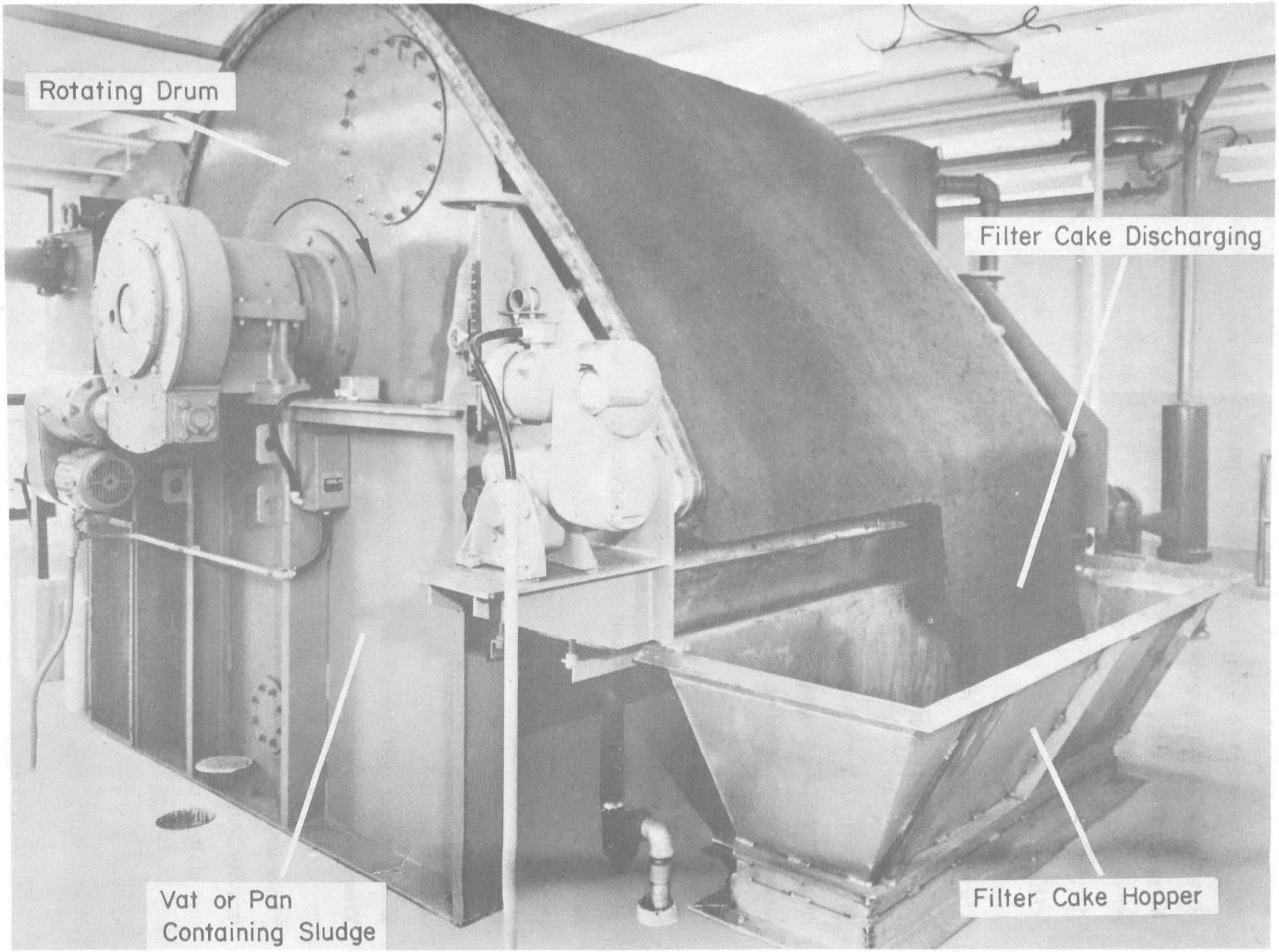

FIG. V-1 VACUUM FILTER

(Courtesy of Envirex)

is flushed off by the wash sprays. The cake is consequently recycled to the treatment system, and may overload and cause failure of the process. Vacuum filters have a high capital cost and are difficult to operate, sometimes requiring one man solely assigned to the operation of the filter. When feasible, many newly constructed secondary treatment plants are now using centrifuges.

Centrifuges

Three types of centrifuges are now commercially available. The solid bowl centrifuge (Figure V-2) is more suitable for the dewatering of inorganic sludges. Disc nozzle (Figure V-3) and basket centrifuges (Figure V-4) seem to work better on organic sludges, but the disc nozzle type tend to clog at high concentrations of sludge, or when proper sludge pretreatment (grit removal, screening) is not provided.

Centrifuges typically do not produce as dry a product as vacuum filters, but they are cheaper and considerably easier to operate. They may also be operated with wetter sludges as feed.

Other Methods

Filter presses, or pressure filters seem to be able to work extremely well on several sludges and at several different feed moisture contents. They are, however, quite expensive, and can be difficult to operate and maintain. They are seldom used in waste treatment applications.

There are about three different units on the market that use a combination gravity and capillary action to dewater sludge. These units rely on a porous cloth to suck up water from the sludge as it is squeezed between rollers.

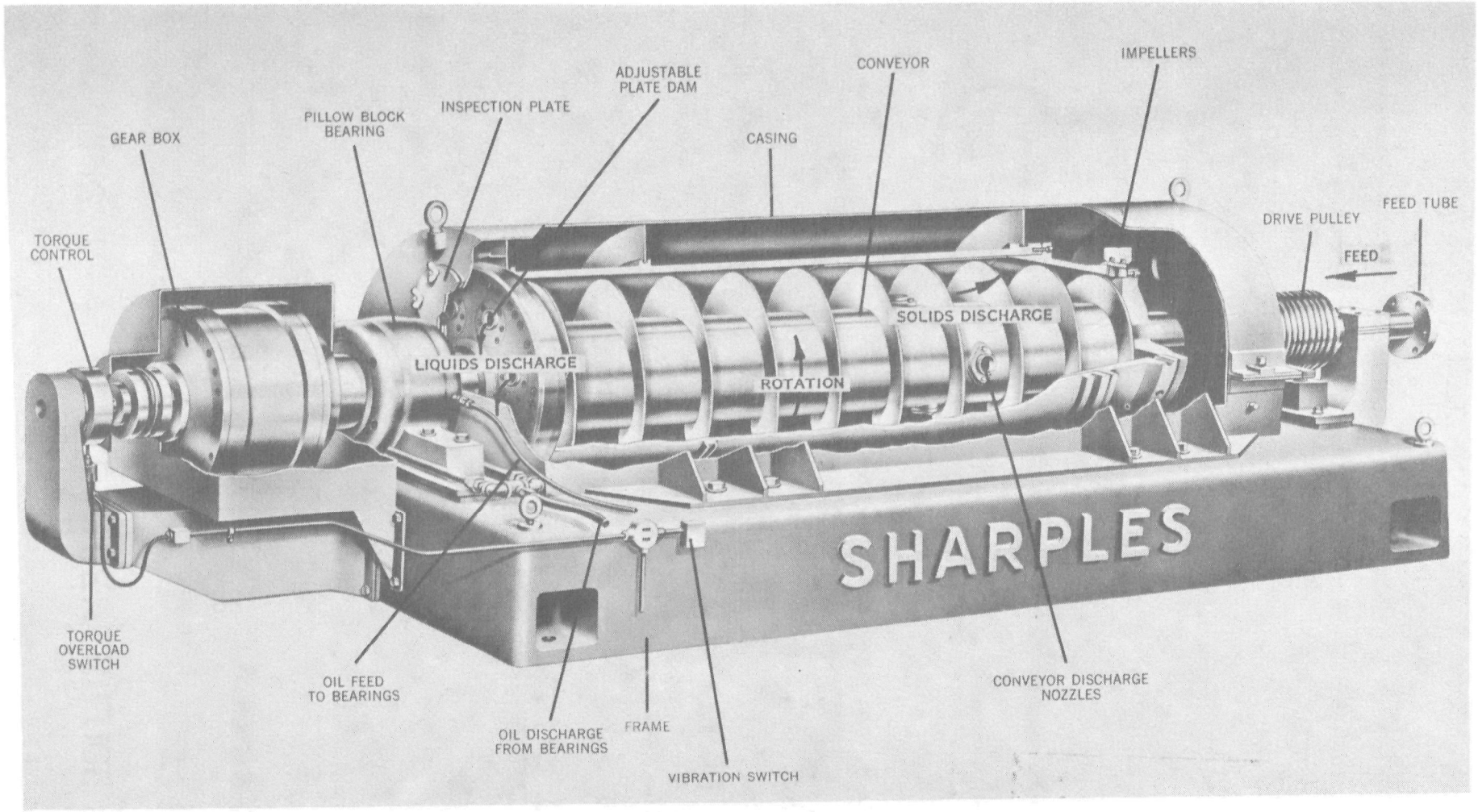

FIG. V-2 SOLID BOWL CENTRIFUGE

(Courtesy of Sharples)

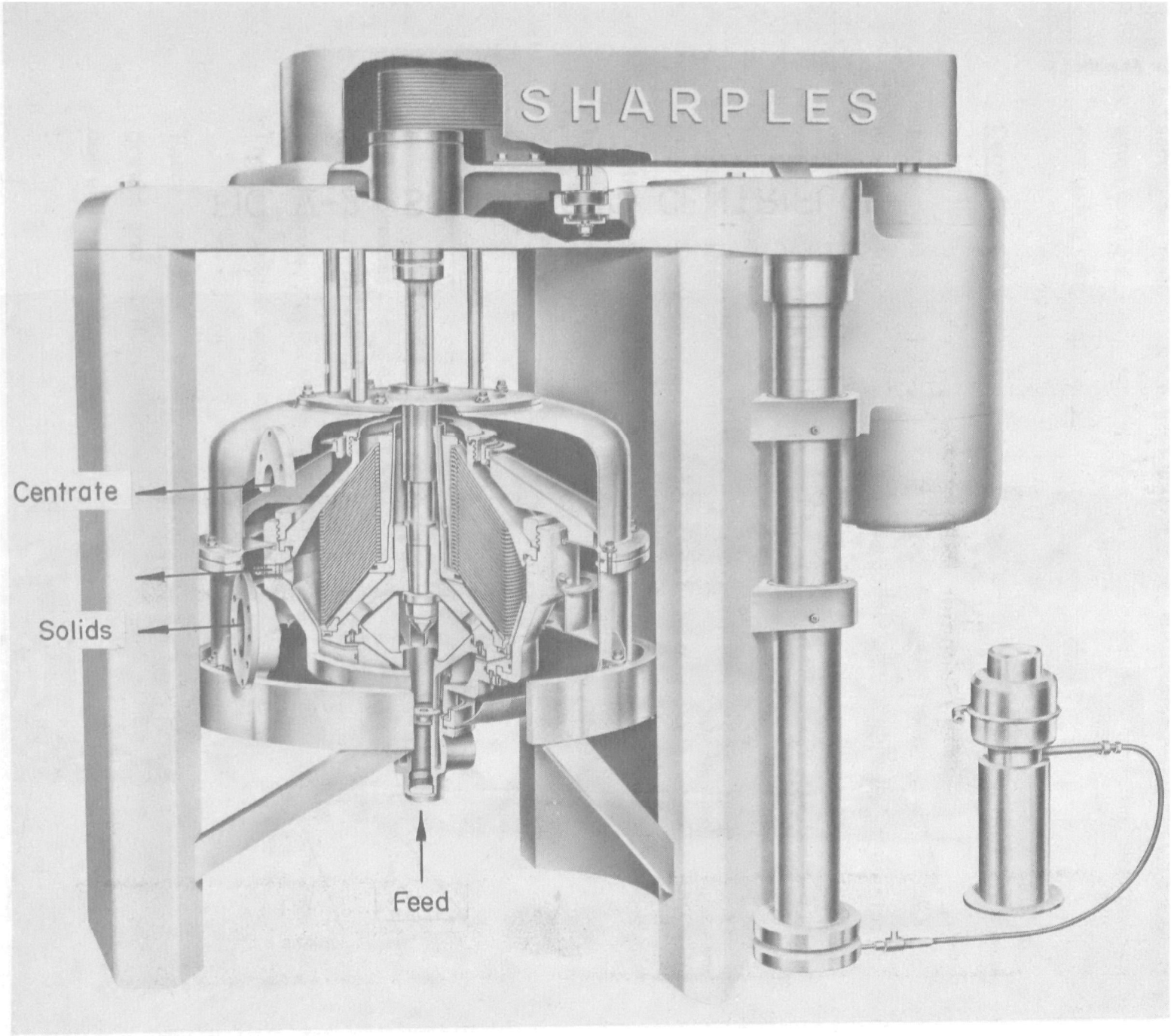

FIG. V-3 DISC NOZZLE CENTRIFUGE

(Courtesy of Sharples)

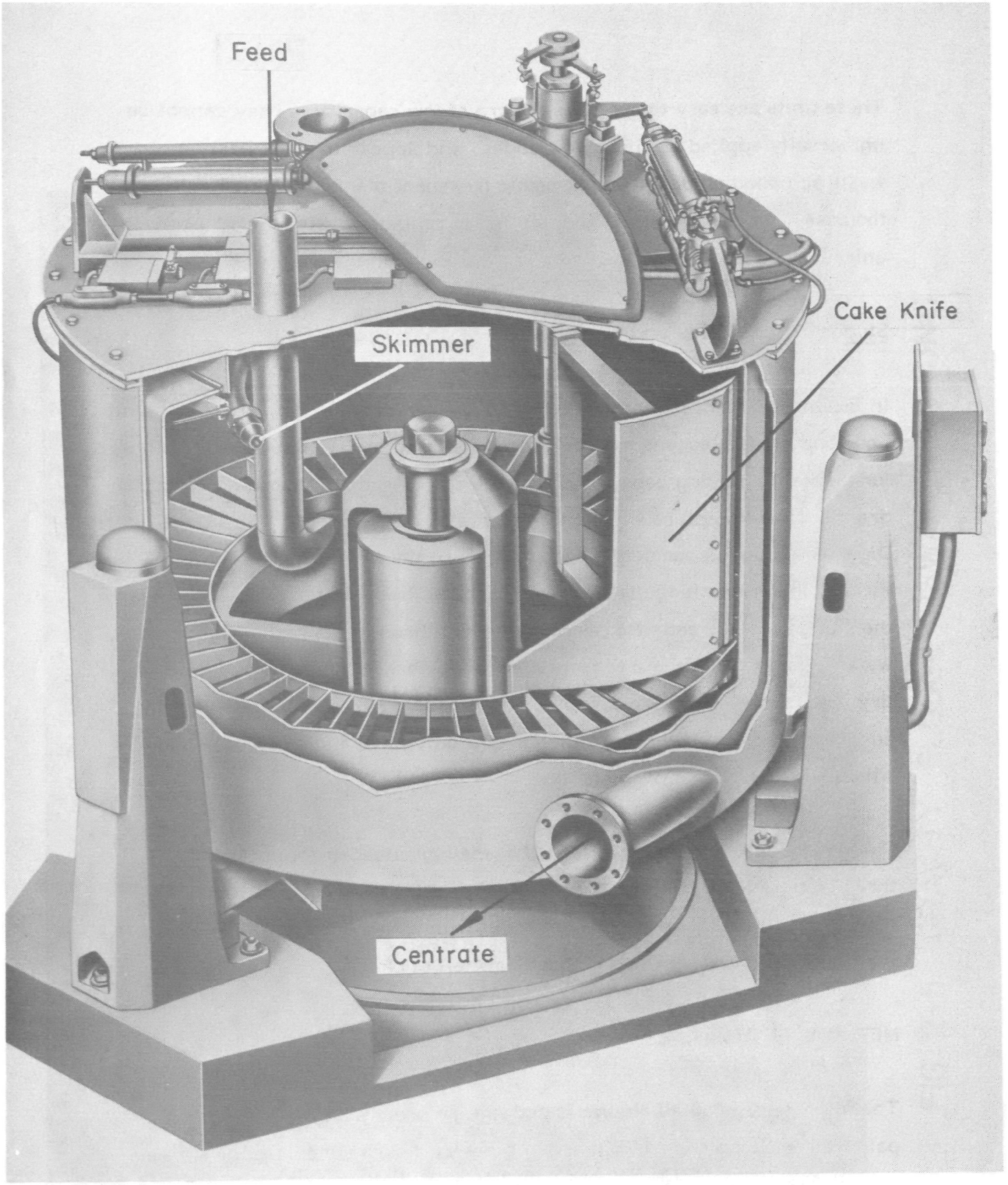

FIG. V-4 BASKET CENTRIFUGE

(Courtesy of Sharples)

These units are easy to operate, but are of low capacity. They cannot be universally applied to different sludges, and appear to work best on waste activated sludges from domestic treatment plants. They should be thouroughly tested before being applied to cannery waste. A typical unit is illustrated on Figure V-5.

Sludge Drying Beds and Lagoons

In localities with dry weather during the processing season, sludge drying beds and sludge lagoons may be effectively used to dewater digested sludge for disposal. Drying beds are constructed with sand bottoms and an underdrain system to capture water that percolates down through the sludge. Digested sludge is pumped to each bed, until the depth reaches about 18 inches, then new sludge is pumped to another bed. Water evaporates from the sludge surface and also percolates down through the bed. The drained water is returned to the treatment plant headworks. When sufficiently dry, the sludge is taken out with a skip loader. So long as the sludge is adequately digested, the drying beds will only have a slight musty odor, which should not be a problem

Sludge lagoons differ from beds in that they are deeper (about two to three feet), and do not have a sand blanket with underdrains. If sufficiently dry, the sludge may be taken out with a skip loader, otherwise it must be romoved removed with a clamshell bucket.

METHODS OF DISPOSAL

The ultimate disposal of sludge is becoming more a problem. Most municipal treatment plants are now disposing dewatered digested sludge in some type of landfill operation. In-plant solids from most canneries are disposed in landfill operations, usually run by a municipality. These sites are filling, consequently canneries are being asked to go elsewhere with their waste solids.

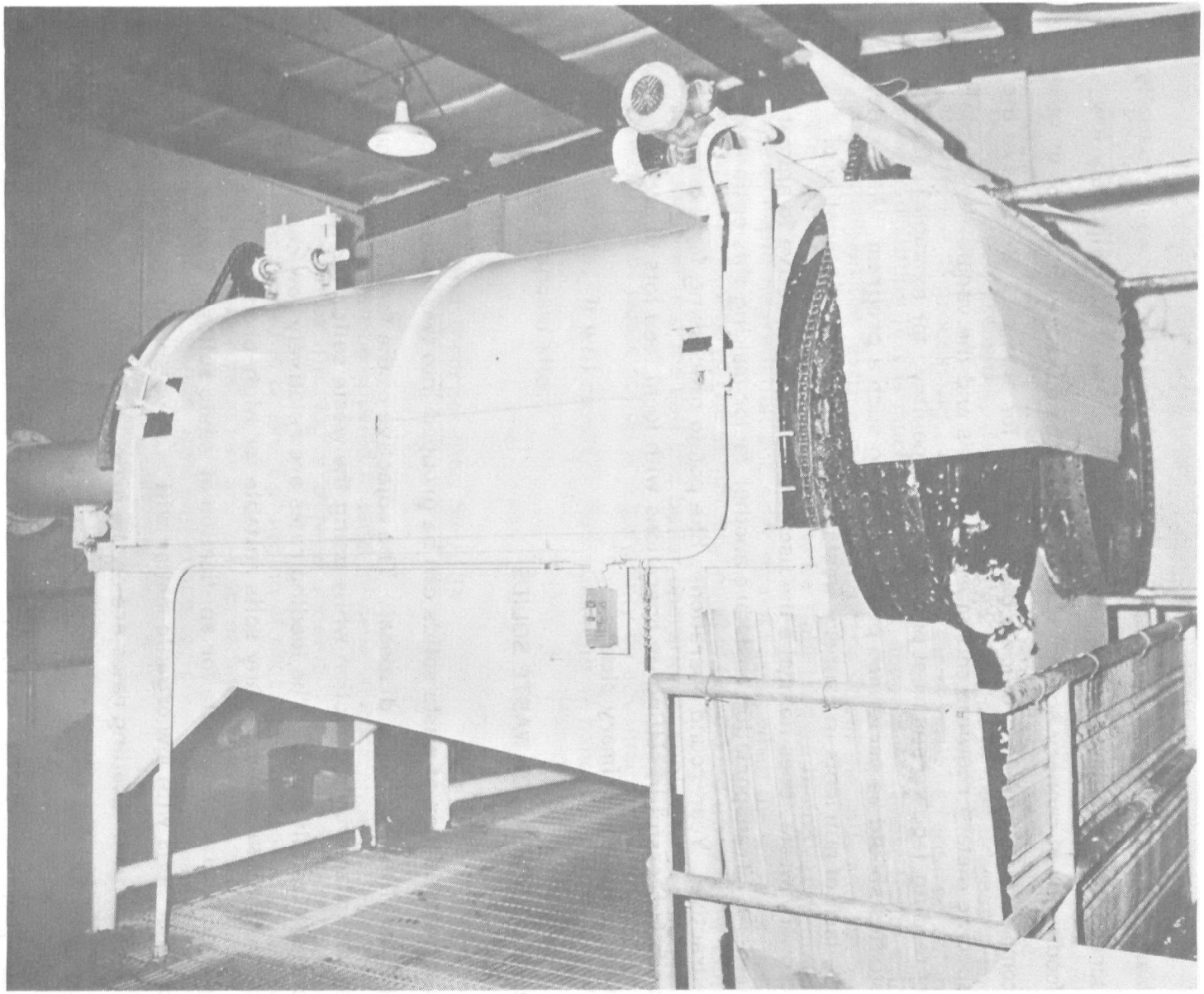

FIG. V-5 GRAVITY SLUDGE DEWATERING UNIT

(Courtesy of CH_2M HILL)

Some canneries are now operating their own land disposal system for cannery solids and treatment plant sludge.

Many canneries are able to dispose of some portion of their waste, usually screenings, to animal feeding operations. Because of the relatively low food value of cannery screenings, they must be mixed with grains or other common feedstuffs to provide a balanced diet for animals. Because of the specific dietary requirements of many animals and the variability of goals of feeding (egg versus meat production for poultry, for example), feeding studies should be performed prior to staring such a program. As a rule, the lack of nutrients in cannery waste coupled with the seasonality of cannery waste, does not make the use of this waste attractive to animal feeders. Transportation costs are another factor making this option unattractive. Year-round operations, like potato processing for example, have been successful in setting up operations with local feed lots to accept screenings and primary sludge.

LAND DISPOSAL OF WASTE SOLIDS

Land application of waste solids can be grouped into two methods: (1) fertilizer, and (2) disposal. The objective of the fertilizer method is to maximize crop production while using the waste solids for nutrients and soil conditioning. The loading rates are relatively low compared to the disposal method. Any soils suitable for high-production agriculture will generally be suitable for application of waste solids. Clayey soils or other soils with low organic matter will receive special benefit from this use. Loading rates are on the order of 3 to 10 tons of dry solids per acre per year.

The objective of the disposal method is to maximize disposal by incorporating large amounts of the waste solids into the soil. A crop is maintained mainly

to enhance site appearance, minimize wind erosion, take up moisture, or utilize some of the nutrients in the waste solids. Loading rates are on the order of 5 to 50 tons per year.

Pretreatment Requirements

Waste solids from food processing vary greatly in character and pretreatment requirements, depending upon the type of food processed and the method of processing. Adjustment of the pH will be required before land application if it is much below 6.4 or above 8.4. These limits will vary, depending on the texture and buffering capacity of the soil, and the loading rate. The waste solids may need to be stabilized by biological treatment so that rapid degradation and odor do not result when the waste solids are applied to land. The solids may need to be ground up to allow better incorporation into the soil and better operation of application equipment. Dewatering of waste solids will generally be advantageous to a land disposal system. It will result in less volume to be handled and may require a smaller disposal site.

Application and Incorporation Methods

A waste solid can be applied to land by several different methods. As a liquid, it can be injected or plowed under the surface, or it can be sprayed on if it is screened to prevent plugging of nozzles. As a solid, it can be spread by equipment such as manure spreaders. The selection of the suitable method depends upon soil characteristics, crop, labor requirements, maintenance, topography, and costs.

Many problems have developed regarding methods of incorporating the waste solids into the soil. The waste must generally not be allowed to

remain on the soil surface for a long time because of odor, insect, and wind and water erosion problems which often result. Insect problems may develop even when liquid waste solids are immediately incorporated into the soil. This has been prevented by spreading the waste in a thin layer and allowing it to remain on the surface just long enough to dry before tilling into the soil.

Site Selection Criteria

The criteria for solids waste disposal site selection are generally the same as those listed for a waste effluent disposal site with the following exceptions:

- Hydraulic loading will normally not be as great; therefore, the subsurface permeability is not as important.

- Waste solids application will generally have a more adverse appearance than effluent application; therefore, a more remote or concealable site should be selected.

Application Rate Constraints

The waste solids application rate will be limited by several constraints. In comparison to the limits to effluent loading, the following differences are evident. The hydraulic loading limits, infiltration capacity, root zone permeability, and geologic permeability are less important because relatively minor amounts of water will generally be applied with the waste solids. Factors such as nutrient balances and BOD will reach a maximum before hydraulic loading does. The most common limiting factor of waste solids application is the solids loading rate. Solids must be incorporated into the soil as applied or very shortly thereafter. Limits exist on much

organic solids can be physically incorporated into the soil, and the soil's ability to decompose solids wihout causing plant toxicity problems. Other factors such as SAR and pH may also limit waste solids application. All of the above-mentioned factors vary greatly between types of food processed and the method of processing and waste pretreatment. The loading rate must be studied carefully in each case.

Management and Operation

Proper management and operation of a waste solids disposal system is as important as for a waste effluent treatment and disposal system. A major factor of operation is the timing of waste solids application to the land.

In a fertilizer application system where crop production is optimized, waste solids cannot be applied and tilled into the soil while the crop is growing. Tillage would kill the crop. The best times for waste solids application are in the spring, before the crop is planted, and in the summer or fall, after the crop is harvested. Cropping areas and disposal areas can be alternated. The method of disposal used--either fertilizer or disposal--will depend greatly on who owns the site and who operates the system. A farmer will want to maximize crop production, and a cannery will want to maximize waste disposal. Other practices, such as crop and soil management and monitoring, are also important as noted in the discussion of waste effluent treatment and disposal.

Cost of Waste Solids Delivery and Application

The cost of disposing of waste solids onto land can vary greatly depending on the amount of liquid with the solids, on the distance of transportation, and on the method of delivery and application. Some typical recent costs for solids hauling are given in Table V-5. Actual costs vary considerably due to differences in disposal sites, governmental regulations, availability of trucking firms, and pretreatment requirements. The costs given in the Table do not include pretreatment or site preparation costs.

TABLE V-5
COST RANGES OF SOLIDS HAULING AND DISPOSAL

Hauling of Liquid Sludge (4-15% TS) to Ponding Site (20 mile haul)	4 to 5 cents/gallon includes disposal fee of 3½ cents per gallon
Hauling of Liquid Sludge (4% TS) to Farm Land (35 mile haul)	2 cents/gallon or $3.70/ton-mile
Hauling of Screenings, Mud to Land Fill	$4.00/cubic yard - includes disposal fee of $1.00/cubic yard
Hauling, Spreading of Dewatered Sludge to Disposal Site (5 mi haul)	$1 to $2/ton-mile
Hauling, Spreading of Liquid Sludge to Disposal Site (5 mi haul)	$3 to $4/ton-mile
Hauling of Hazardous Waste (acid, caustic) to Evaporation Ponds	8 - 10 cents/gallon includes disposal fee

LIST OF REFERENCES

1. American Society of Agronomy, "Irrigation of Agriculture Lands", Agronomy Series No. 11, Madison, Wisconsin 1967.

2. American Public Works Association, "Survey of Faciltiies Using Land Application of Wastewater," July 1973.

3. Ben-Gera, I., and A. Kramer, "The Utilization of Food Industries Wastes," Advances in Food Research, 17, 1969.

4. Environmental Protection Agency, "Aerobic Secondary Treatment of Potato Processing Wastes." December 1970.

5. Environmental Protection Agency, "Demonstration of a Full-Scale Waste Treatment System for a Cannery," September 1971.

6. Environmental Protection Agency, "Development Document for Effluent Limitations Guidelines for the Apple, Citrus, and Potato Processing Categories." March 1974.

7. Environmental Protection Agency, "Development Document for Proposed Effluent Limitation Guidelines...for the Fruits and Vegetable Point Source Category," October 1975. Draft.

8. Environmental Protection Agency, "Proceedings, Fifth National Symposium on Food Processing Wastes," June 1974.

9. Environmental Protection Agency, "Proceedings, Fourth National Symposium on Food Processing Wastes," December 1973.

10. Environmental Protection Agency, "Liquid Wastes from Canning and Freezing and Vegetables," August 1971.

11. Environmental Protection Agency, "Treatment of Citrus Processing Wastes," October 1970.

12. Environmental Protection Agency, "Wastewater Treatment and Re-Use by Land Application," August 1973.

13. National Canners Association. "Management of Solid Residuals." 1971 Research Highlights.

14. National Canners Association, "Solid Waste Management in the Food Processing Industry," 1973.

15. Noyes Data Corporation, "Waste Disposal Control in the Fruit and Vegetable Industry." 1973.

16. Oregon State University Water Resources Research Institute, "Characterization of Fruit and Vegetable Processing Wastewaters," January 1975.

17. University of California Extension, "Guidelines for Interpretation of Water Quality for Agriculture." 15 January 1975.

☆ U.S. GOVERNMENT PRINTING OFFICE: 1975—210-810:55