EPA-R2-73-248
MAY 1973

Environmental Protection Technology Series

Anaerobic-Aerobic Treatment of Textile Wastes with Activated Carbon

Office of Research and Monitoring
U.S. Environmental Protection Agency
Washington, D.C. 20460

RESEARCH REPORTING SERIES

Research reports of the Office of Research and Monitoring, Environmental Protection Agency, have been grouped into five series. These five broad categories were established to facilitate further development and application of environmental technology. Elimination of traditional grouping was consciously planned to foster technology transfer and a maximum interface in related fields. The five series are:

1. Environmental Health Effects Research
2. Environmental Protection Technology
3. Ecological Research
4. Environmental Monitoring
5. Socioeconomic Environmental Studies

This report has been assigned to the ENVIRONMENTAL PROTECTION TECHNOLOGY series. This series describes research performed to develop and demonstrate instrumentation, equipment and methodology to repair or prevent environmental degradation from point and non-point sources of pollution. This work provides the new or improved technology required for the control and treatment of pollution sources to meet environmental quality standards.

EPA-R2-73-248
May 1973

ANAEROBIC-AEROBIC TREATMENT OF TEXTILE WASTES WITH ACTIVATED CARBON

By

Calvin P. C. Poon
Philip P. Virgadamo

Project 12090 EQO

Project Officer

Donald R. Smith
New England Basins Office, EPA
240 Highland Avenue
Needham Heights, Massachusetts 02194

Prepared for

OFFICE OF RESEARCH AND MONITORING
U.S. ENVIRONMENTAL PROTECTION AGENCY
WASHINGTON, D.C. 20460

For sale by the Superintendent of Documents, U.S. Government Printing Office, Washington, D.C. 20402
Price $2.85 domestic postpaid or $2.50 GPO Bookstore

EPA REVIEW NOTICE

This report has been reviewed by the Environmental Protection Agency and approved for publication. Approval does not signify that the contents necessarily reflect the views and policies of the Environmental Protection Agency, nor does mention of trade names or commercial products constitute endorsement or recommendation for use.

ABSTRACT

The operation of an anaerobic-aerobic bio-oxidation treatment system utilizing activated carbon was studied for 24 months at Palisades Industries, Peace Dale, Rhode Island. Biological oxidation and conversion of soluble organic waste constituents took place in the aerated basin operated as a mixed dispersed growth reactor without return sludge. Washed out solids from the aeration basin were filtered by a parallel set of activated carbon columns. The entrapped solids were then hydrolized when these columns were regenerated in place anaerobically. A second parallel set of carbon columns provided for additional removal of solids and soluble organics. However, the biological regeneration in these columns was carried out aerobically.

Both the Laboratory and the large scale Pilot Plant experiments revealed 1) good color removal; 2) oxidation of organic chemicals fed to the system; 3) major reduction in BOD and COD in the waste effluent stream; and 4) continued biological regeneration of the activated carbon; and 5) high degree of removal of suspended solids without conventional mechanical equipment.

This study has clearly demonstrated that waste streams from a typical cloth dyeing and finishing operation can be effectively treated using activated carbon coupled with biological regeneration. The prime advantages to this system are a result of the catalytic effect rendered by the activated carbon on difficult to degrade organic molecules and the small space requirements in respect to conventional treatment systems for an equivalent degree of treatment.

This report was submitted in fulfillment of a Research and Development Grant Number 12090 EQO between the Office of Research and Monitoring of the Environmental Protection Agency and Palisades Industries, Inc.

CONTENTS

Section		Page
I	CONCLUSIONS	1
II	RECOMMENDATIONS	3
III	INTRODUCTION	9
IV	DESIGN AND INSTALLATION OF FACILITIES	19
V	PRELIMINARY STUDY	41
VI	OPERATION OF PROJECT	53
VII	EVALUATION AND DISCUSSIONS	61
VIII	ACKNOWLEDGEMENTS	103
IX	REFERENCES	105
X	APPENDICES	107
	APPENDIX A	109
	APPENDIX B	247

FIGURES

No.		Page
1	Treatment Plant Process	13
2	Molecular Weight vs. Adsorption	14
3	Hydrolysis by Activated Carbon	16
4	Wastewater Treatment System	17
5	Plan - Unit I	21
6	Layout - Units II & III	24
7	Photograph - Units II & III	26
8	Unit II	28
9	Unit III	32
10	Photograph - Unit III	34
11	Control- Wiring Schematic	36
12	Photograph - Control Panel	38
13	Effluent Profile	44
14	Composite Effluent Profile	45
15	Equilibrium Isotherm	47
16	Equilibrium Isotherm	48
17	Equilibrium Isotherm	49
18	Equilibrium Isotherm	50

FIGURES (cont.)

No.		Page
19	Fluid Phase Transfer	51
20	Project Schedule	54
21	Removal of TOC	69
22	COD and MLVSS vs. Time	71
23	Specific Growth Rate	72
24	Treatment Efficiency - Unit II	73
25	Organic and Inorganic Carbon vs. Time	75
26	Effect of Anaerobic Regeneration	76
27	Aerobic Regeneration Operation	78
28	Organic Removal Efficiency	80
29	Performance - Unit II	86

TABLES

No.		Page
1	Performance	5
2	Projected Performance	6
3	Design Capacities	39
4	Sample Analysis	43
5	Performance - Unit I	64
6	Performance - Unit I - COD	66
7	Performance - Unit I - Soluble COD	67
8	Performance - Unit I - BOD	68
9	Performance - Unit II	82
10	Performance During Startup	89
11	Performance Data - Leg A	91
12	Performance Data - Leg B	94
13	Performance Analysis - Unit II	99

SECTION I

CONCLUSIONS

Operation of an anaerobic-aerobic bio-oxidation treatment system designed to provide secondary and tertiary treatment of highly concentrated textile wastes was studied at Palisades Industries.

The following conclusions have been reached, based on the results of the study presented in this report:

1) Removal of organic matter by activated carbon adsorption followed by anaerobic regeneration in place is feasible. Under the testing conditions in full scale, anaerobic regeneration is capable of restoring carbon adsorption capacity to 1.0 - 1.6 pounds total COD/day/100 pounds carbon. This capacity is equivalent or nearly equivalent to the equilibrium adsorption of the carbon.

2) BOD removal was accomplished by conversion of soluble organic material into insoluble biomass in the aeration stage (Unit I). These biosolids are then entrapped in the anaerobic carbon bed of Unit II and hydrolyzed by anaerobic decomposition during the regeneration cycle. Those soluble organic compounds passing through Unit II were adsorbed in the second stage carbon bed of Unit III and decomposed by aerobic means during regeneration.

3) The waste stream had to be supplemented with 0.5 pounds of NH_4Cl per 100 gals. to maintain a sufficient biomass in Unit I.

4) Analyses of heavy metal contents in the Palisades wastewater were below 1.0 mg/l. Due to the washout rate in Unit I and the inherent buffering capacity of the activated carbon in Units II and III, the biosystem was not inhibited at this concentration.

5) There was little or no volatile acid accumulation in the system, indicating a sufficient buffering capacity of the system.

6) Volatile suspended solids removal by the adsorption-anaerobic regeneration unit averaged, during each treatment cycle, 47.5% of MLVSS or 23.6 pounds of MLVSS/6 hour treatment cycle.

7) Under normal flow (75,000 gpd), the equalization basin was able to remove approximately 50% of BOD of the Palisades wastewater. If a biological solids return system is provided, it is anticipated that 85% BOD_5 can be removed by this visit.

8) A long regeneration period assured good recovery of the carbon adsorption capacity. The length of regeneration period should be 2.6 times that of a treatment period in order to bring 21% to 31% total COD removal.

9) Good removal of the solid or dissolved organics in the equalization basin reduces the possibility of the activated carbon columns becoming overloaded and therefore assures a better performance of the overall system.

10) Average BOD removal for the activated carbon columns with anaerobic regeneration was 24%, and for the activated carbon columns with aerobic regeneration was 18%. The total average BOD removal for the entire system was greater than 65.5% as shown in Table 1, Section I.

11) Color removal appeared to be good; however, this was based on visual observations only.

12) A combined treatment system for highly concentrated textile dyewastes can be constructed and operated at substantial savings compared to an unmodified carbon or biological treatment system.

13) The anaerobic-aerobic bio-oxidation system with activated carbon utilizes less space (2,700 square feet) than an equivalent conventional biological treatment system.

14) Post chlorination is a good practice for odor control, disinfection and further color removal. A residual free available chlorine of 0.5 ppm after a contact time of 20 minutes should be maintained in the effluent.

SECTION II

RECOMMENDATIONS

Analysis of the data obtained indicates several areas where design modifications or further operation studies would be desirable.

UNIT I (EQUALIZATION BASIN)

Given a long period of retention time in the aeration tank, a large portion of the organics can be oxidized. It is recommended that a 50% expansion of the existing aeration tank be provided for this purpose. A larger aeration tank can also equalize the organic load better so that a more steady performance can be expected. Because of the resistant nature of the dye wastes, a well-acclimated biological culture is essential for the successful oxidation. Operating the aeration tank as a dispersed-growth biological reactor in this project proved to be only partially successful. Washout of biological solids from the aeration tank occurred repeatedly because only an extremely low biological solids concentration could be maintained which was easily upset by fluctuations of hydraulic and organic loadings. It is of the utmost importance to provide sludge return facilities in the system. The facilities should include an adequate settling chamber (surface settling rate of approximately 500 gpm/sf) and sludge return pumps which can handle a returned flow as much as 50% of the influent flow. With these modifications of the aeration tank, it is anticipated that an 85% BOD or 75% TOC removal can be achieved. Consequently, the capacity of Unit II or Unit III need not be vastly expanded for residual organic removal.

UNIT II (ACTIVATED CARBON WITH ANAEROBIC REGENERATION)

Two changes should be made on Unit II. First, the feed pump presently used feeds Unit II at a rate of 150 gpm which is proven too high. It is recommended that a 50 gpm pumping rate (approximately equivalent to the average daily flow rate of Palisades waste of 75,000 gpd) be used with continuous operation. When the influent flow increases, a higher pumping rate can be used. Secondly, a third carbon vessel of the same capacity of the existing ones should be added. This will allow one vessel of Unit II to be on stream while the other two vessels are in regeneration. This in effect provides two-day regeneration for one day treatment, a ratio which was found essential for successful anaerobic regeneration of the carbon adsorption capacity.

It should be noted that in Table 2 a higher percentage of organic removal is expected of Unit II. In reality, the weight of organic matter removed is approximately equivalent to that of the actual amount of removal by the existing system based on test data. For example, the expected TOC removal in Unit II (Table 2) is 50% of the remaining TOC from Unit I. Since Unit I is expected to remove 75% TOC, Unit II therefore is expected to remove 12.5% of the total amount of TOC in the influent. Tested data showed (Table 1) that Unit II removed 15.5% to 26.0% of the remaining TOC from Unit I or a net removal of 10.8 - 15.0% of the influent TOC. The expected removal is therefore nearly equal. The same argument applies to BOD removal. The expected BOD removal of 50% constitutes a net 7.5% influent BOD removal while project data showed a net 12% removal was obtained for Unit II. With a more steady and lower feed rate, it is expected that Unit II can achieve the expected goal of organic removal without difficulty.

UNIT III (ACTIVATED CARBON COLUMNS WITH AEROBIC REGENERATION)

Similar to the change in Unit II, it is recommended that Unit III capacity should be expanded by 50% by adding two new columns. As a result, the Unit can be operated on a two-day regeneration to one-day treatment basis. Again, the expected performance of Unit III is reasonable when it is compared to the actual performance on the basis of percentage of net removal of influent organic.

Based on the expected performance from Table 2, effluent BOD at 75,000 gpd average flow is 28.0 mg/l. At a maximum flow of 125,000 gpd, the effluent BOD will be 70 mg/l which is less than desirable. At the present time, the Palisades Industries' schedule seldom generates a wastewater flow equivalent to the maximum 125,000 gpd flow rate.

FUTURE STUDIES

The data collected in an anaerobic filter study (Section VI) had to be discontinued because of difficulties of pressure buildup. There seems to be little advantage in using activated carbon as the filter medium in the anaerobic filter because the mechanism of organic removal does not rely on adsorption followed by regeneration. Coarse medium such as gravel or synthetic medium such as Dowpac could be used. The larger void space will allow more biological growth without creating a plugg-

TABLE 1

PERFORMANCE OF PALISADES TREATMENT SYSTEM

		Detention Time	% Soluble TOC Reduction	% Soluble COD Reduction	% BOD Reduction	Regeneration per Treatment cycle
Unit I	75,000 gpd or lower		27.3-42.0	26.6-40.0	44.6-56.4	
	100,000 gpd or above		10.6	13.2	18.9	
Unit II*	216,000 gpd (150 gpm) intermittenly	10 min.	15.5-26.0	15.0-30.7	24.0	1.2-2.6
Unit III*	216,000 gpd (150 gpm) intermittenly	7.0 min.	23.7	28.4	18.0	2.4
Total	75,000 gpd or lower (of Unit I flow)		53.2-67.3	54.6-70.2	65.5-72.8	
	100,000 gpd or above (of Unit I flow)		42.4-49.5	47.1-56.9	49.4	

* Data of Unit II and Unit II on poorly performing days due to solid washout, poor aeration, short regeneration cycle, etc. were not included.

TABLE 2

PROJECTED PERFORMANCE OF PALISADES TREATMENT SYSTEM WITH RECOMMENDED MODIFICATION

Unit	Flow	Recommended changes	Percent Reduction TOC	Total COD	BOD
Unit I	75,000 gpd	Size of aeration tank increased 50%, settling chamber (wet well).	75	60	85
	125,000 gpd	Size increased 400% with provision of sludge return.	70	55	75
Unit II	75,000 gpd	Add one new column and increase the amount of activated carbon to 9000 pounds in each column.	50	60	50
	125,000 gpd	Feed pump at continuous rate of 75000 gpd to 125000 gpd. Regeneration to treatment period ratio = 2/1.	45	50	35
Unit III	75,000 gpd	Add two new columns and increase the amount of activated carbon to 4000 pounds in each column.	25	50	25
	125,000 gpd	Feed pump rate identical to Unit II. Regeneration treatment period ratio - 2/1.	20	45	20
Total	75,000 gpd (average flow)		90.6	92	94.4
	125,000 gpd (max. flow)		86.8	78.5	86.0

Expected Effluent Concentration		TOC mg/l	Total COD mg/l	BOD mg/l
	75,000 gpd	54.0	144.0	28.0
	125,000 gpd	79.0	207.0	70.0

(Based on influent conc. TOC = 600 mg/l
Total COD= 1800 mg/l
BOD = 500 mg/l)

ing problem which forced the termination of the testing in this present work. The unit has a high potential in dye waste treatment and is worth further study.

SECTION III

INTRODUCTION

POLLUTION FEATURES OF TEXTILE PROCESSING WASTES

Textile processing wastes provide a multidimensional problem that may affect the receiving stream. Not only does the amount of pollutants vary, but the typesof pollutant also vary.

Organic substances in textile waste such as dyes, starches, and detergents undergo chemical and biological changes which consume dissolved oxygen from the receiving water. Such organic substances should be removed to prevent septic or low dissolved oxygen conditions and obnoxious odors, and to avoid rendering the receiving water unsuitable for municipal, industrial, agricultural, residential and recreational use.

The presence of inorganic salts in high concentration may make the receiving water unsuitable for most industrial and municipal uses, and may cause corrosion on boats and other marine structures. Foaming from detergents and colors from dyes, although non toxic in low concentrations, are esthetically objectionable, particularly in drinking and recreational waters. Certain carrier chemicals used in dyeing, such as phenols, add to tastes and odors. Metal toxicity from chromium and zinc can be harmful to aquatic life if it does occur. Nitrogen and phosphates from dyes may cause eutrophication problems in receiving waters. In many instances, even the pH of the textile dyeing and finishing wastes could cause problems in the receiving stream by upsetting the ecosystem.

Thermal wastes, such as cooling waters, may reduce the amount of oxygen by increasing the consumption of oxygen in the receiving water. The problem of oxygen deficient water can thus be intensified. Also, thermal waste is detrimental to cool water loving species of aquatic life. Perhaps more important to aquatic life is an increase of toxicity due to the fluctuation of temperature caused by the periodic discharge of cooling water into the receiving stream. As a result sensitive organisms would be eliminated causing an inbalance in the biological community.

TREATMENT OF TEXTILE PROCESSING WASTES

Due to the great variation of waste characteristics from the textile dyeing and finishing industry, which depends on the material processed, equipment used, type of operation and housekeeping practices, numerous treatment methods have been used for pollution control. Treatment methods such as equalization, neutralization, coagulation, chlorination, bio-oxidation and carbon adsorption are employed in various combinations by textile industries. Each industry must study its own waste problems to obtain the best treatment at the lowest cost. To achieve this, utilization of an on-site pilot or an extensive laboratory study should be used.

Of all the pollutants in textile waste, those most abundant and objectionable are organic substances and color. The removal of these pollutants usually determines the major treatment process. The method used in a biological treatment system consists of units to provide long retention periods of aeration allowing the heavy concentrations of micro-organism to consume the material in the waste. One state regulatory agency reports that eighty percent of all plants currently being constructed are based on aeration methods (biological treatment systems).

Although a biological treatment process provides an economical approach for treatment of textile wastes, a considerable amount of biological resistant material usually exists in textile waste effluent which renders the process ineffective. A carbon adsorption process can remove biologically resistant material and color residue from the effluent because of its affinity to adsorb soluble organic molecules. The major consideration for a carbon adsorption system is that the carbon must be regenerated to prolong its life and thereby reduce treatment costs. Thus at a high level of concentration, the process becomes uneconomical because of the frequency of regeneration. Usually carbon adsorption does not apply to treatment of organic concentration much higher than 200ppm.

The feasibility of regenerating carbon in place by biological means constitutes the major part of this demonstration project. A biological treatment system followed by carbon adsorption using biological regeneration appears to be useful for treating high concentration organic wastes at significantly lower costs and reduced land area requirements.

STATEMENT OF THE PROBLEM

Conventional waste treatment approaches require utilization of land which is not readily available to textile plants and often the costs impart too large an economic burden. The principal objective of this project was to demonstrate the effectiveness of a treatment system involving bio-oxidation and carbon adsorption for highly concentrated textile dyeing and finishing wastes as both economical and compact.

The non-conventional treatment process proposed was a compact system occupying no more than 2,700 square feet. It would comprise of 1) an aerated equalization basin capable of holding 50,000 gallons; 2) a novel anaerobic-aerobic oxidation unit incorporating activated carbon which would rapidly convert organic suspended solids into soluble components and 3) an activated carbon unit which would polish the effluent to a low BOD level, reduce color and suspended solids to a negligible level and impart a 2 to 4 mg/l dissolved oxygen level to the final effluent river discharge.

Palisades Industries of Peacedale, Rhode Island is a commission dyer and finisher of synthetic and synthetic-cotton blend fabric. Because of their use of modern enclosed dye jigs and finishing machines, their dyeing and finishing liquor is highly concentrated. The resultant effluent discharge results in an overload of organic pollutants. It would be impractical to utilize biological treatment only, for many of the pollutants are biologically resistant to further degradation. Likewise, an unmodified carbon adsorption treatment system would not be effective because the high concentration of organic substances would tend to plug the carbon filter prematurely by using up the adsorption capacity of the activated carbon which requires biological regeneration on an uneconomically high frequency.

HISTORICAL DEVELOPMENT

The Fram Corporation of East Providence, Rhode Island designed a new system of aerobic-anaerobic bio-oxidation utilizing activated carbon that effectively dealt with the problems inherent in the present types of treatment processes. The biological oxidation process took place in an aerated equalization basin operated as a completely mixed, dispersed growth reactor. Activated carbon columns filter the biological solids and remove some soluble organics. The columns are regenerated in place anaerobically. A second set of carbon columns are provided for additional removal of solids and soluble organics. The biological regeneration in these columns, however, is carried out aerobically.

Fram applied this concept with carbon columns using aerobic regeneration in the treatment of textile dyeing and finishing wastes in Rhode Island and Massachusetts. Figure 1 shows the flow chart of the described process. The dyehouse effluent enters the dispersed phase reactor which serves as an equalization tank as well as an aeration tank in which a major reduction of BOD and partial color removal are obtained by biological oxidation. The effluent from the dispersed phase reactor then passes in series through either one of the two carbon systems each containing two columns charged with granulated activated carbon. These columns adsorb the remaining BOD and color in soluble form as well as filter out suspended matter by means of a rapid rate depth bed filtration mechanism. One system is put on stream for treatment while the second one undergoes biological regeneration. Biological regeneration is accomplished by contacting the columns with the effluent of a second reactor wherein a viable micro-organism seed culture is maintained. Biological degradation takes place to remove the organic matter which was adsorbed by the carbon. When sufficiently regenerated, the carbon system so regenerated is switched back on stream, and the other carbon system subsequently goes onto biological regeneration. This system is designed to handle lower organic concentration and low suspended solids wastes.

To widen the application of this process to strong industrial wastes, the anaerobic-aerobic bio-oxidation process utilizing activated carbon was developed by Fram to handle large slugs of suspended and soluble organic solids. Numerous reactions including physical, chemical and biological take place in the carbon columns during the treatment and regeneration cycles in an aerobic or anaerobic condition. The complexity of reactions and interactions is beyond comprehension at this time. Only a simplified version of what takes place is discussed in the following.

THEORY

The steps in carbon adsorption process are: 1) transport of the solute from the solution to the exterior surface of the carbon; 2) transport of the solute through the pores of the carbon; and, 3) the adsorption of the solute onto the solid. In general, the adsorption rate is controlled by the rate of diffusion of solute within the adsorbent particles. In addition to adsorption rate, the adsorption capacity is also of great importance. A general effect of molecular weight of solute on the rate and capacity of adsorption is presented in Figure 2.

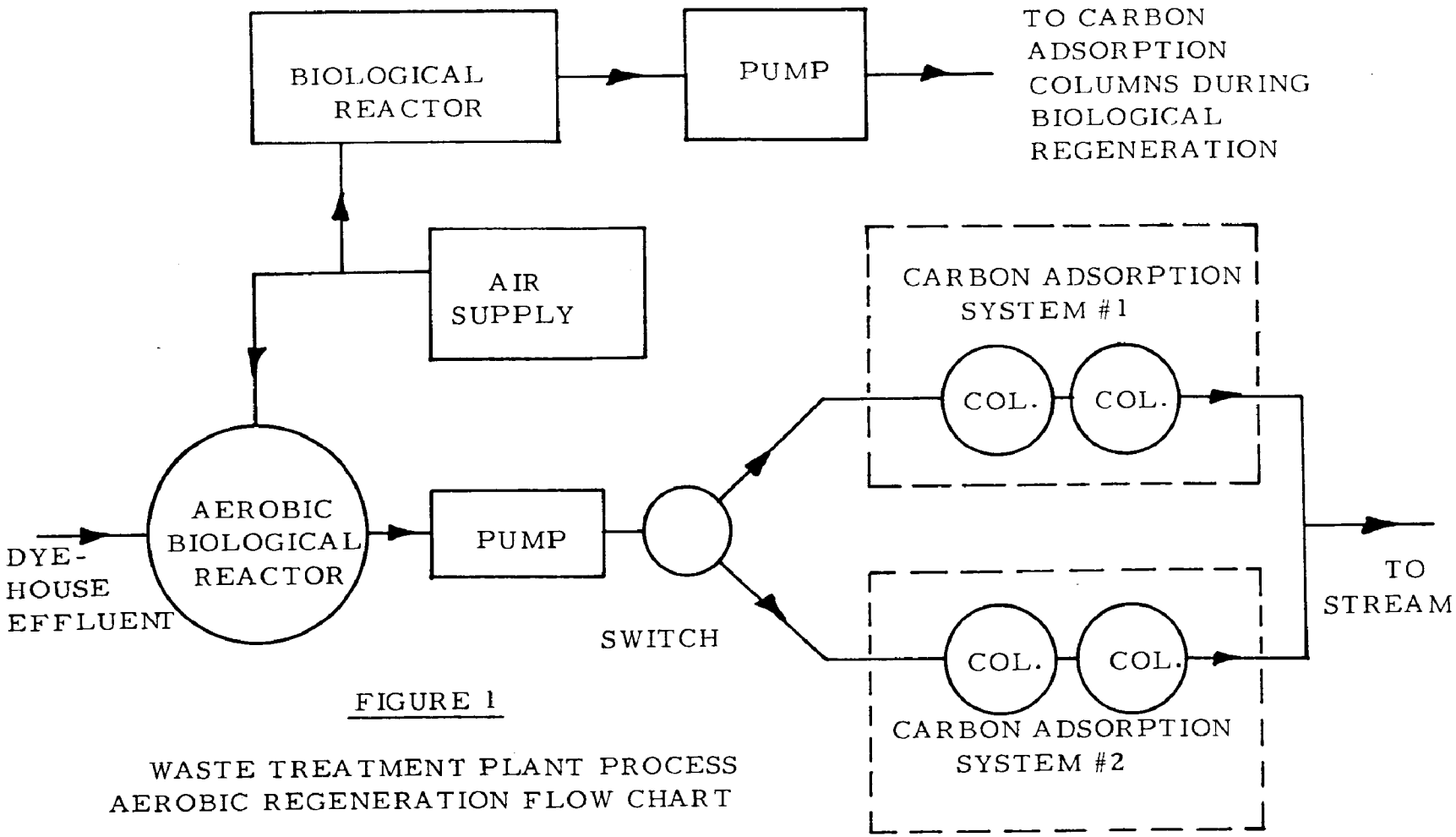

FIGURE 1

WASTE TREATMENT PLANT PROCESS
AEROBIC REGENERATION FLOW CHART

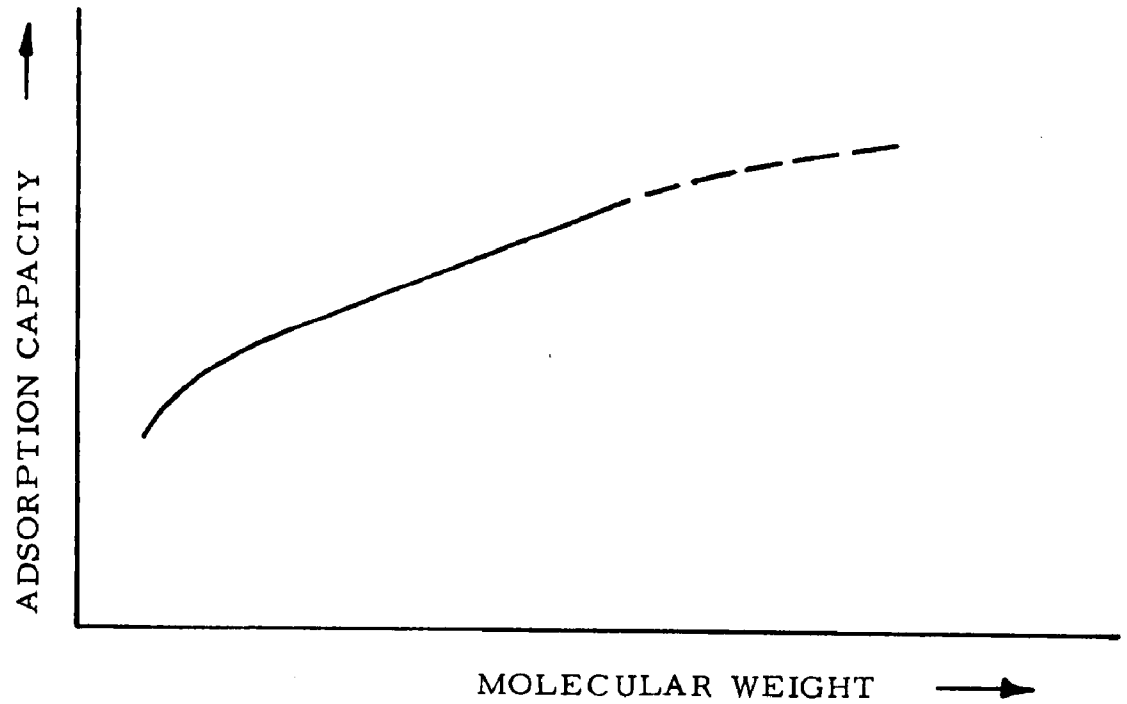

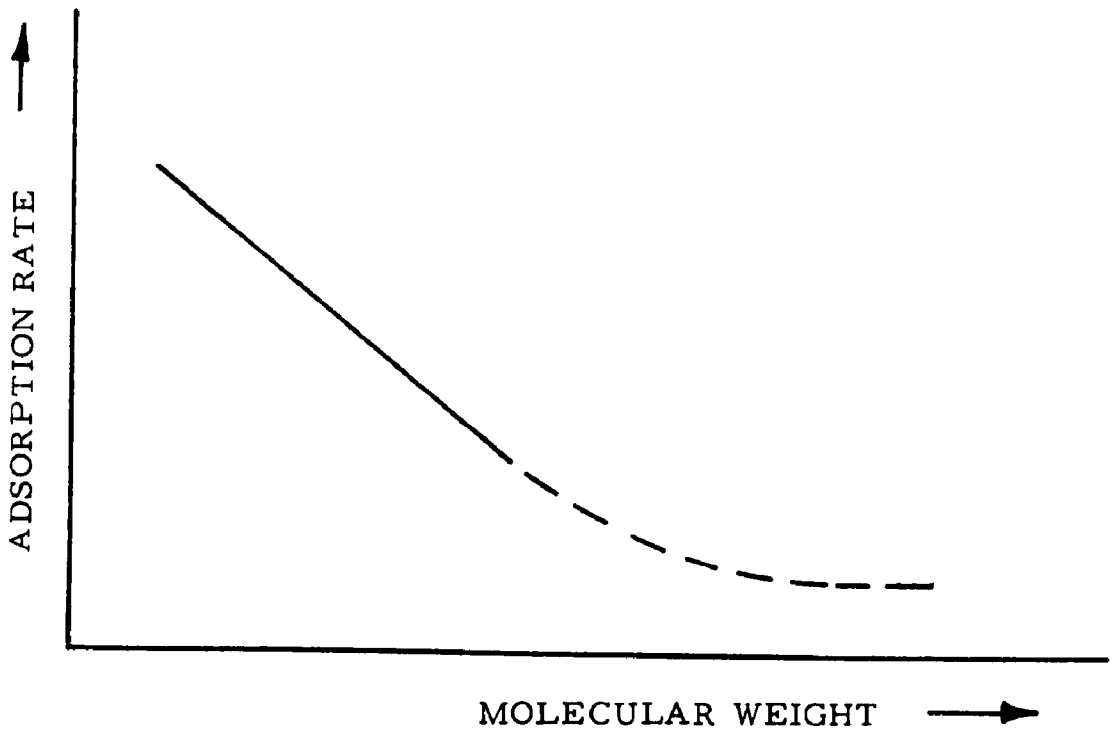

FIGURE 2

EFFECT OF MOLECULAR WEIGHT OF SOLUTE ON THE RATE AND CAPACITY OF ADSORPTION

While this relationship does not necessarily hold true for all solutes, it is true for organic substance removal from raw wastewater and biological treatment effluent. Zuckerman and Molof found that both the activated sludge process and the carbon adsorption process removed organic molecules primarily having a molecular weight below 450. The increased degree of activated sludge treatment, causing a shift to soluble material larger than 1200 molecular weight, therefore reduced the adsorption removal by carbon. By using a chemical hydrolysis process such as lime treatment, most of the large molecular weight organics could be hydrolyzed into small molecular weight material below 450. Activated carbon adsorption could complete the removal of these remaining substances. The hydrolysis therefore prepared the activated sludge effluent for a more efficient adsorption by activated carbon. As a result, the effluent quality was better than that of a conventional tertiary treatment process without hydrolysis. This hydrolysis effect is presented in Figure 3 showing the treatment of a wastewater having 1 - 1200 molecular weight distribution of the organic substances.

The Palisades Industries treatment system designed by Fram Corporation has the following unique features: 1) instead of using a prolonged aeration or extended aeration biological treatment, carbon adsorption is used while the state of the effluent is changed to anaerobic and then back to aerobic for easier bio-oxidation at successive regeneration stages; 2) high degree removal of non fiber suspended solids can be accomplished without the mechanical equipment that is required for solids separation and sludge disposal associated with conventional treatment plants; and, 3) the whole system is compact in that it requires less than 2700 square feet of floor space. A conventional activated sludge system to treat the Palisades wastewater, including sludge disposal would require roughly five to seven times as much floor space and more mechanical equipment for the operation.

Laboratory and pilot plant column experiments with synthetic wastewater with various dyestuffs and chemicals typical of the dyeing and finishing materials used by textile industries have shown 1) good color removal, 2) oxidation of organic chemicals fed to the system, 3) major reductions in BOD and COD in the waste effluent stream, and 4) continued biological regeneration of the activated carbon in situ.

In order to facilitate description of the process, a schematic diagram is shown identifying all units in the treatment system in Figure 4. A detailed discussion will be presented in Section I.

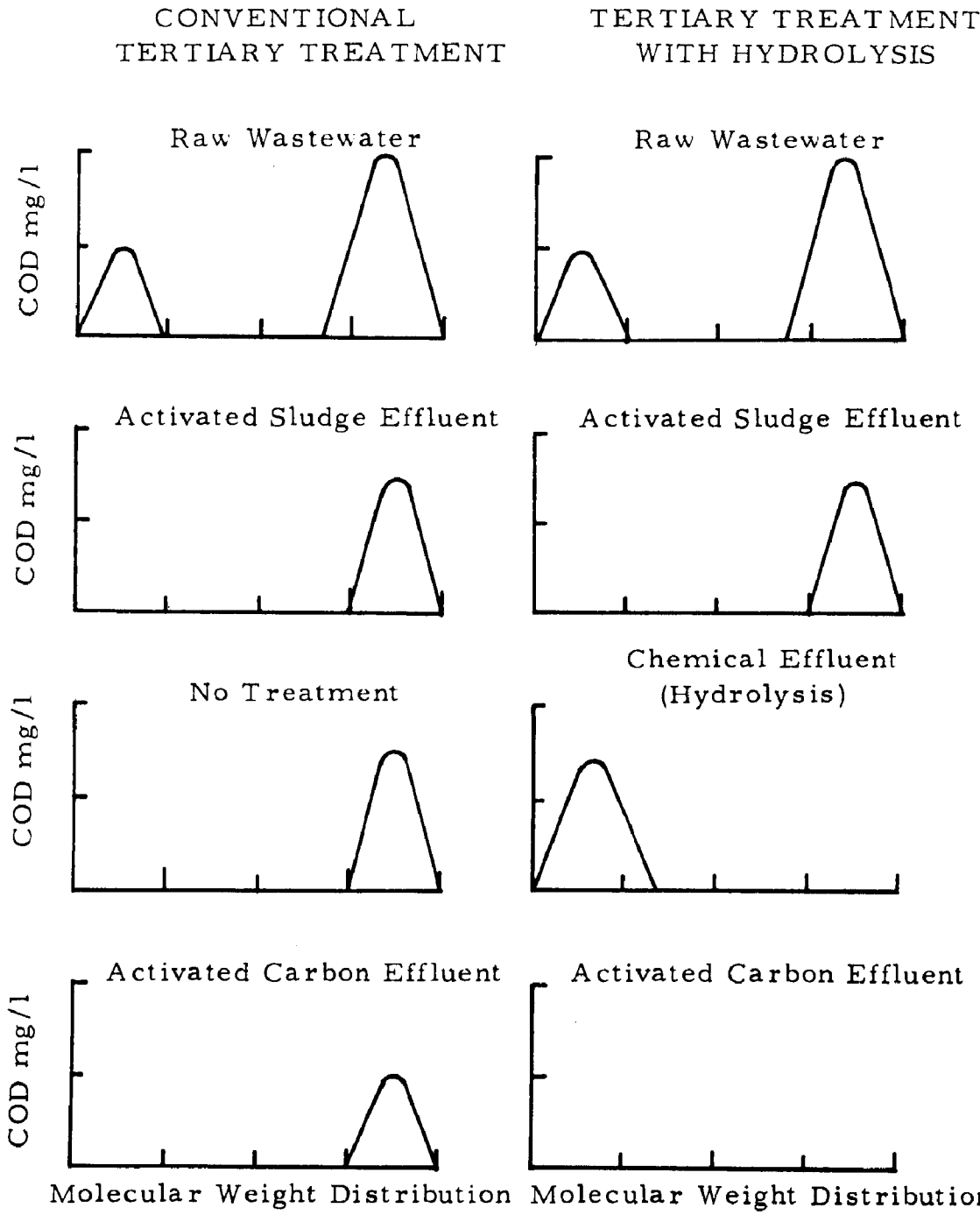

FIGURE 3

EFFECT OF HYDROLYSIS ON TERTIARY TREATMENT
BY ACTIVATED CARBON ADSORPTION

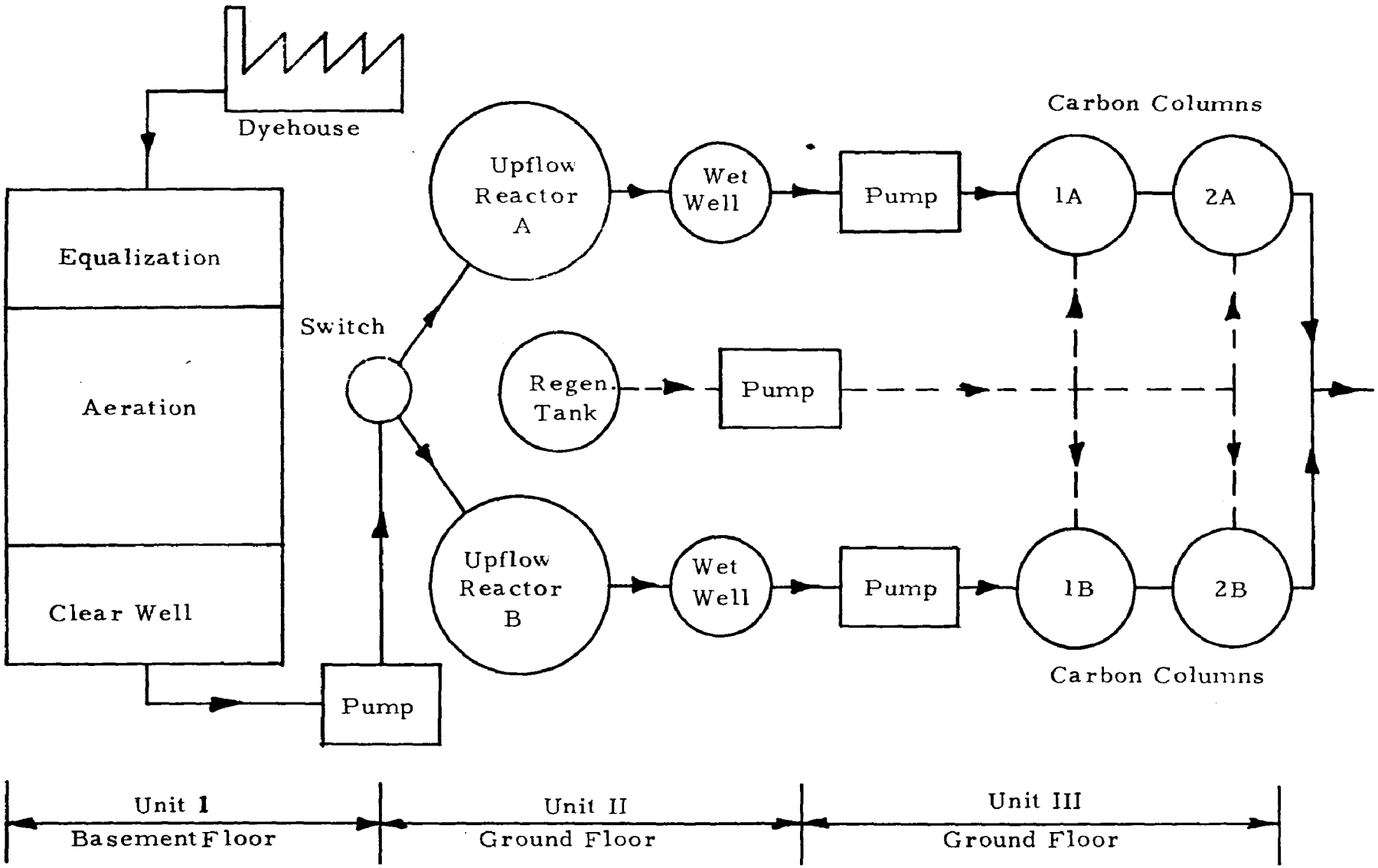

FIGURE 4
WASTEWATER TREATMENT SYSTEM

SECTION IV

DESIGN AND INSTALLATION OF FACILITIES

EFFLUENT STANDARDS

The objective of this project was to demonstrate on a full scale system the applicability of anaerobic decomposition as a method for regeneration of activated carbon. This was done with the provision that waste effluent will be discharged to a municipal sewer when the treatment system is installed by the Town of South Kingston. For this reason no effluent standards were set.

DESIGN CRITERIA AND EQUIPMENT DESCRIPTION

The system was divided into three basic units identified as Units I, II, and III. The function of each unit is as follows:

Unit I	- Removal of primary solids (cloth fibers) and initial roughing of the high BOD loads to the system
Unit II	- Removal of biological and organic solids by adsorption and anaerobic decomposition
Unit III	- Polishing treatment for removal of soluble organics and color.

With the exception of Unit I, the remainder of the system was divided into two identical sets of units designed to operate alternately in contamination and regeneration. These are designated as Leg A and Leg B.

UNIT I

Unit I is an aerated equalization basin which is operated as a dispersed growth reactor in which the waste flow is continuously fed and withdrawn without return of the biological solids. The effluent of Unit I is pumped from the clearwell to Unit II on the ground floor.

Unit I is entirely constructed of reinforced concrete. It is a basin 6'-8" in depth with overall dimensions of 26' x 44' as shown in

Figure 5. The large basin is sectioned by interior walls into six compartments, Pits 1 through 5 and an entrance to the outfall sewer. Functions of these compartments are as follows:

Pit 1 — This compartment serves as a wet well for pumping raw waste from the influent sewer to the remainder of Unit I. Two self-priming pumps of 150 gpm capacity each are installed directly above the opening at Pit 1. They discharge to a 48" diameter SWECO vibrating screen. Pumping is controlled by a float switch and alternator located in Pit 1.

Pit 2 — This pit was originally designed as a settling basin for removal of fibrous material from the raw waste stream. During July, 1971 a SWECO vibrating screen was installed to dewater the fibrous solids on a continuous basis. After the installation of the vibrating screen, Pit 2 served no useful function other than equalization of the waste.

Pit 3 — This compartment was intended as an equalization basin to reduce surges in waste concentration and flow. Due to the high BOD concentration of the waste, it was decided to provide aeration to this chamber and operate it as a dispersed phase biological reactor without solids return. This type of a biological process is intended to serve only as a roughing mechanism to reduce BOD before treatment by the activated carbon in Units II and III.

The waste enters the aeration basin over a weir at the east partition and exits over a weir at the west partition discharging into Pit 4. The entire pit is constructed of concrete coated with polyurethane for protection from the corrosive character of the waste. The basin has a capacity of approximately 21,000 gallons with a side water depth of 4 1/2 feet. At flows measured during the month of September, 1971 averaging 85,000 gpd, the weir overflow rate for Pit 3 was approximately 5000 gpd/linear foot. Aeration is provided at the location of the four hatches over Pit 3. Each aerator is comprised of two "Fitros" A 125 medium porosity diffusers mounted on galvanized iron pipe. Rate of air provided to Pit 3 is approximately 300 cfm total from two 10 horsepower, 200 cfm "Roots Connersville" air blowers.

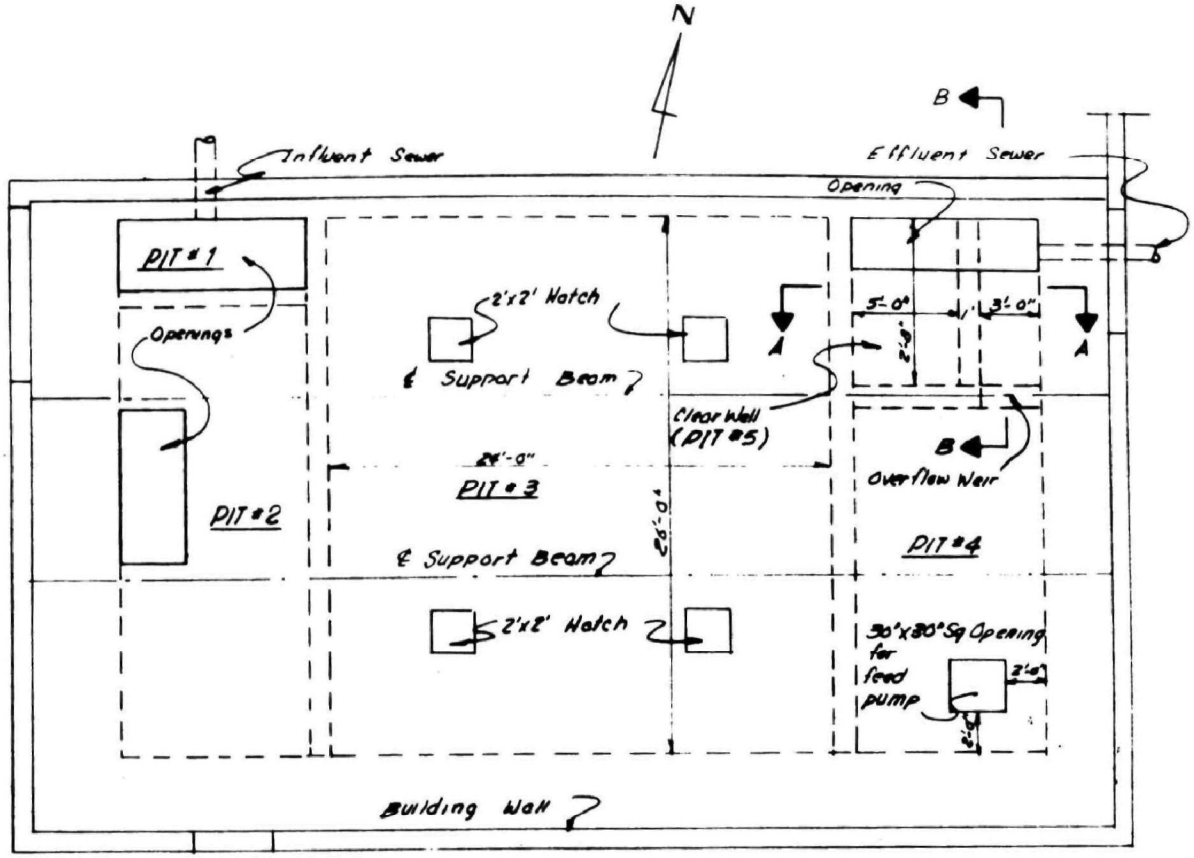

PLAN

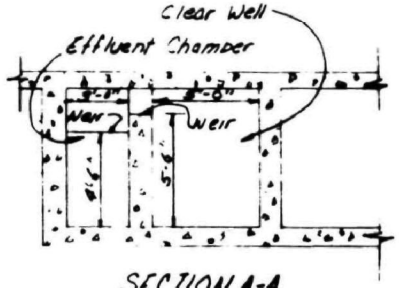

SECTION A-A

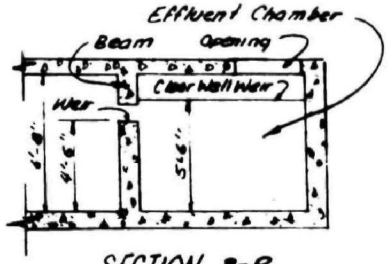

SECTION B-B

FRAM CORPORATION		
Floor Slab Plan	SCALE 1"=5'-0"	DRAWN BY
PALISADES INDUSTRIES INC. PEACE DALE, R.I.		
DATE Oct 1969	DESIGNED BY	DRAWING NUMBER

FIGURE 5

UNIT I

Pit 4 — Pit 4 is a wet well serving two 150 gpm vertical wet pit pumps. These pumps are cycled alternately to feed waste treated in Unit I to the head of Unit II. An overflow weir discharging into the outfall sewer is provided as protection against flooding in the event of pump failure or blockage in Units II or III.

Pit 5 — The purpose of this chamber is to serve as a clear water well for the effluent waste. Following treatment by Unit III, the waste is discharged into the Pit 5. An overflow weir is provided to discharge into the outfall sewer. The primary purpose of the clear well is to serve as a source point for additional treatment equipment.

As an inground basin, Unit I was constructed below ground level in an existing building at Palisades Industries. Reinforced floor beam and slabs cover the basin and provide a platform for Units II and III along with related equipment. A layout of Units II and III is shown as a piping schematic in Figure 6.

UNIT II

Unit II is comprised of two activated carbon reactors, receiving the mixed liquor effluent from Unit I. An upflow mode operation is used to minimize the clogging problem. Each of the two carbon reactors serves two functions: 1) adsorption of soluble organics and color material and 2) filtration of suspended solids. Each reactor is on stream for a predetermined length of time before it is switched to a regeneration cycle, putting the other reactor on stream in the meantime.

Figure 8 shows the basic configuration of Unit II, which is constructed of two spiral wound fiberglass reinforced polyester vessels. The waste enters the first vessel (eight feet in diameter) through a distributor system at the bottom. Above the distributor system is a layer of crushed stone used to further disperse the flow. Above the stone layer the vessel is filled with approximately 8000 pounds of Nuchar WV-G granular activated carbon. The solids in the waste along with organic material are entrapped as waste passes up through the carbon bed. The normal contamination cycle is one day. Unit II is constructed in duplicate to allow for cycling between contamination and regeneration modes.

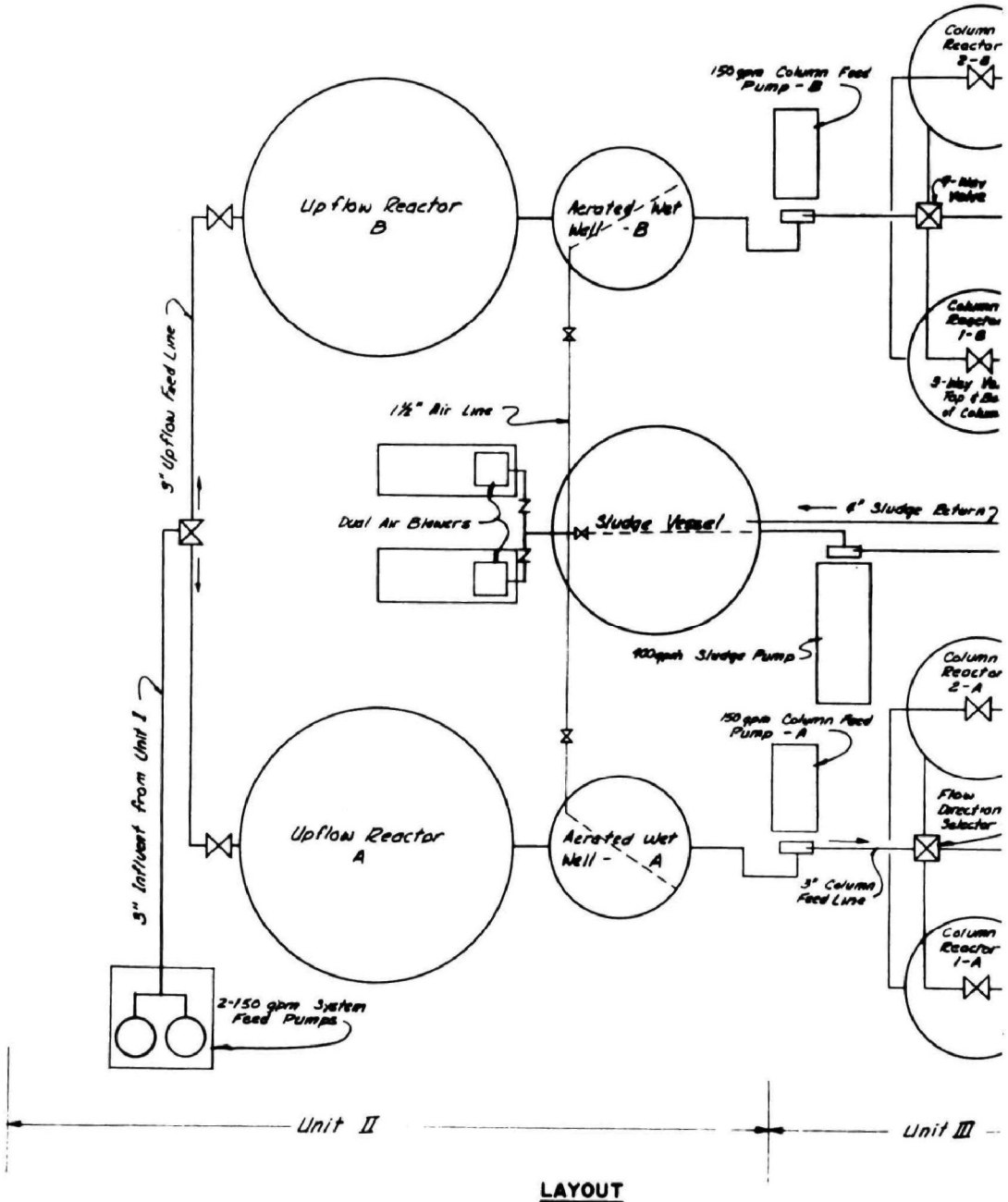

LAYOUT

NO SCALE

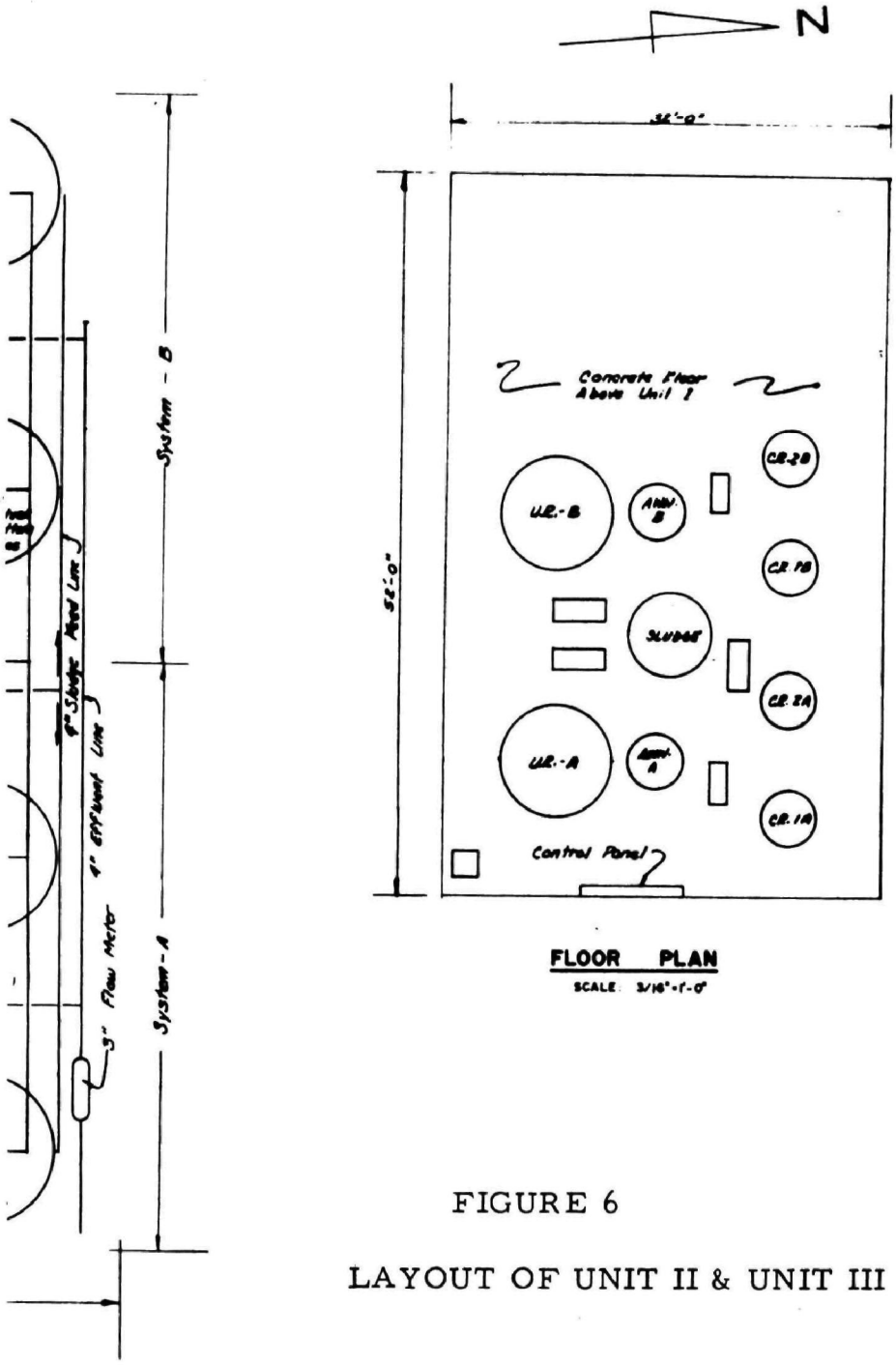

FIGURE 6

LAYOUT OF UNIT II & UNIT III

FRAM CORPORATION		
LAYOUT	SCALE AS SHOWN	DRAWN BY P.P.V.
PALISADES INDUSTRIES INC. PEACE DALE, R.I.		
DATE SEPT. 68	APPROVED BY	DRAWING NUMBER A-10039

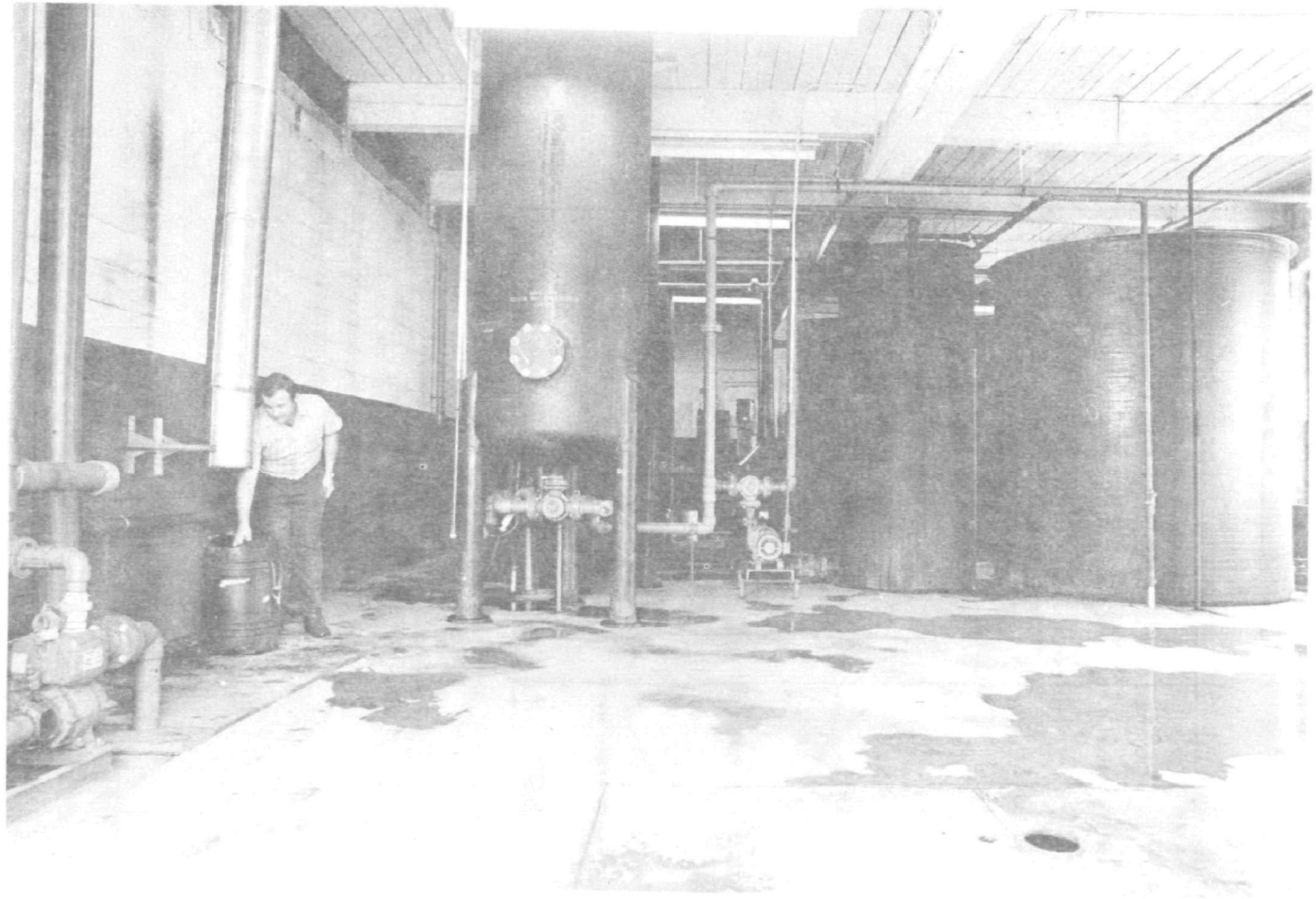

FIGURE 7

UNIT II & III

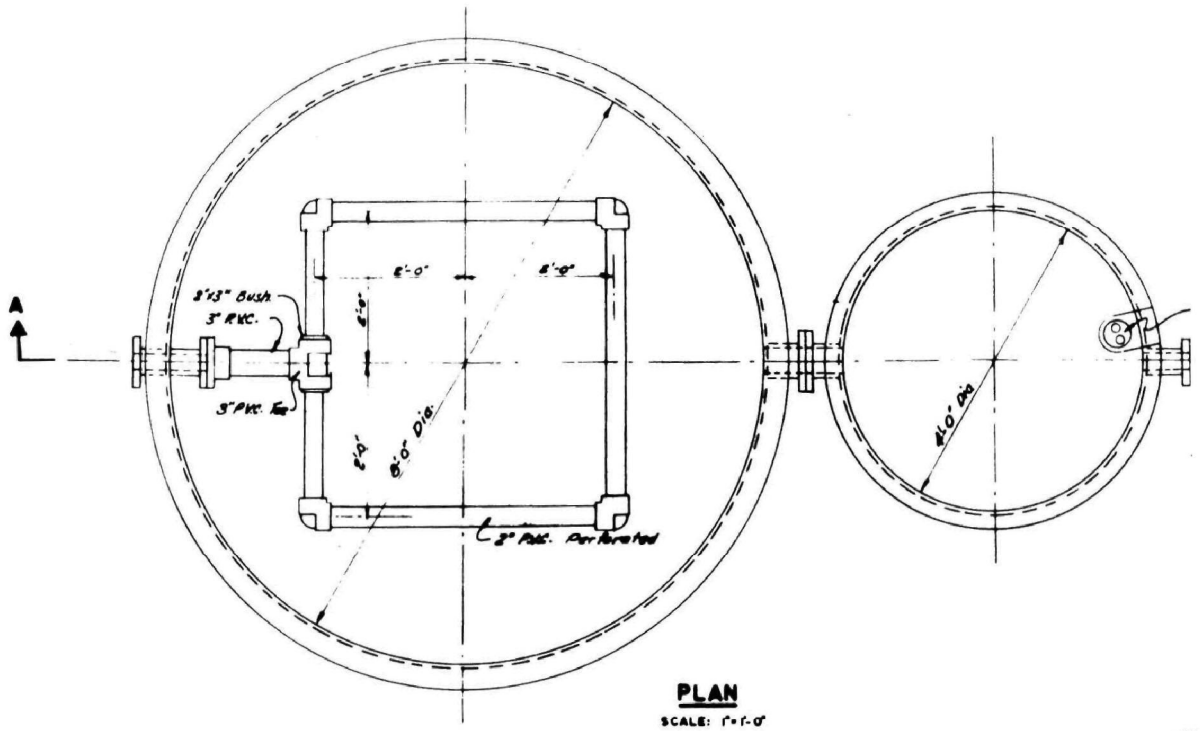

PLAN

SCALE: 1" = 1'-0"

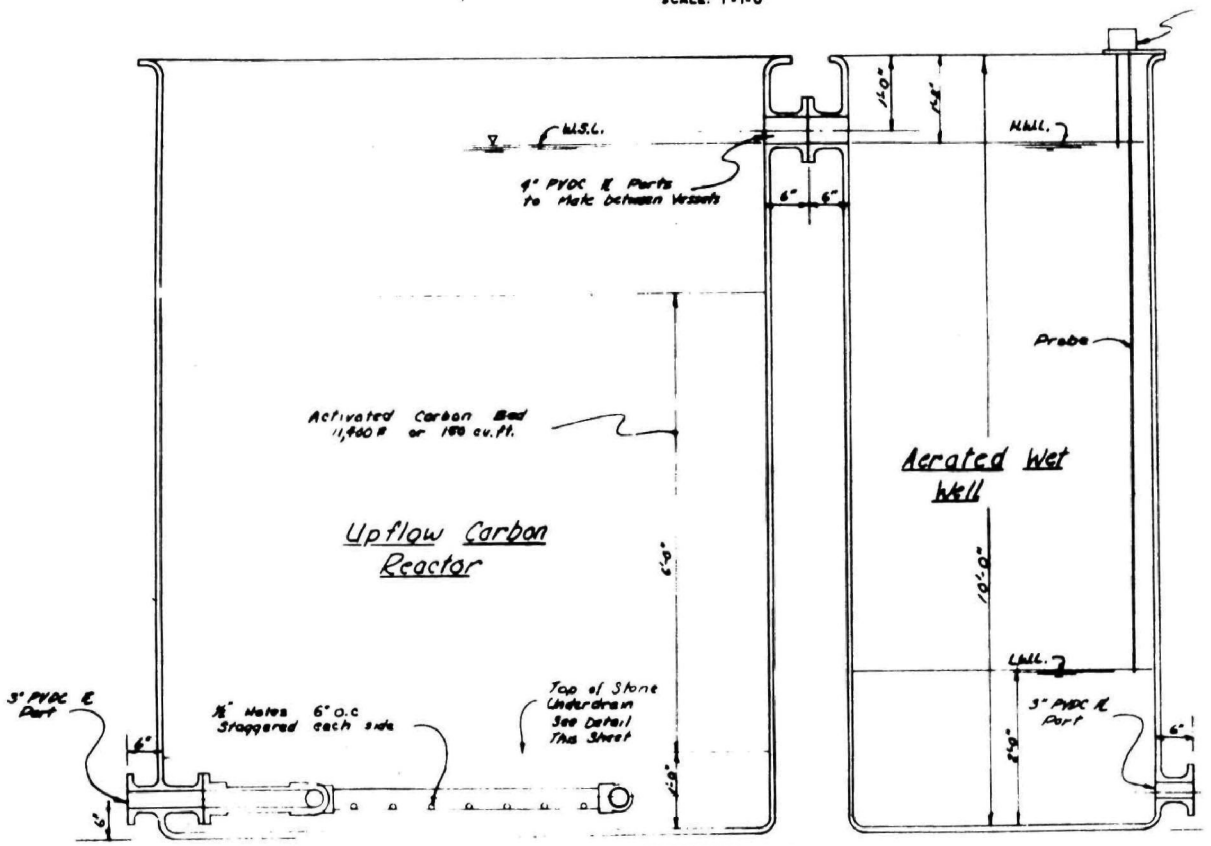

SECTION A-A

SCALE: 1" = 1'-0"

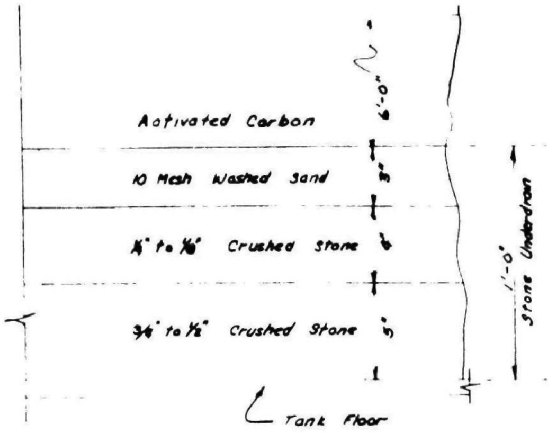

DETAIL

STONE UNDERDRAIN

SCALE: 3" = 1'-0"

B.W. Controller A

B.W. Liquid Level Controller

Notes:

1. Tanks are to be fabricated from fiberglass reinforced polyester in accordance with the "Recommended Product Standard for F.R.P. Vessels", TS-122B, dated Jan 19, 1968.
2. All flanges will be of PVDC or like material bonded to the polyester vessel. Flanges will be 150 lb standard size.
3. All bolts provided will be of galvanized steel.
4. All items not an integral part of the tanks will be provided by Fram Corp.
5. Grouting or a similar support that shall be used under tanks.

FIGURE 8

UNIT II

Effluent to Column Reactors

FRAM CORPORATION		
UNIT II	SCALE AS SHOWN	DRAWN BY P.P.V.
PALISADES INDUSTRIES INC. PEACE DALE, R.I.		
DATE SEPT '68		DRAWING NUMBER A-10036

During the regeneration period, aerobic environment in the reactor is to be avoided because the organic material retained by the carbon system already had received some stabilization by aerobic organisms and further oxidation in an aerobic environment is more difficult. A case in point was demonstrated by Thomas and Bendixen in their study of organics degradation in soil in which a secondary effluent from a trickling filter was found less amenable than septic tank effluent. Therefore, a liquid seal of two feet of water is maintained over the carbon bed to reduce the transfer of oxygen from the atmosphere to the carbon bed. As a result organic matter trapped in the carbon bed will be decomposed by anaerobic micro-organisms. In an anaerobic environment the following reactions are expected to take place: 1) hydrolytic action that changes the biological solids into soluble products; 2) hydrolysis of large molecular weight material into smaller weight material; and, 3) decomposition and conversion of organic substances into inorganic products. Given enough time for these reactions to take place, the reactor could restore its adsorption capacity and be ready for the treatment cycle.

A second vessel attached to the carbon vessel of Unit II serves as an aerated wet well for the Unit III feed pumps. It not only functions as a flow control device, but also introduces dissolved oxygen to the effluent of the anaerobic carbon bed.

UNIT III

Unit III is comprised of four adsorption columns each four feet in diameter. The four columns were operated as two parallel systems (Leg A and Leg B) with two in series. Each column is constructed of spiral wound fiberglass reinforced polyester with domed ends and a manway at the top. Internal construction consists of a F.R.P. grate at the base of the column. A crushed stone underdrain on top of the grating is used to retain a bed of 3000 pounds of Nuchar WV-G activated carbon as shown in Figure 9. To increase flexibility of operation, each pair of columns is piped to operate in either series upflow or series downflow at a flux rate of 12 gallons per minute per square foot.

The activated carbon columns are designed to be regenerated biologically. This is accomplished by using an external source of biologically activated regeneration liquor. The regenerant is stored in a 1500 gallon aerated tank. During the regeneration cycle, the waste flow is transferred to the alternate pair of columns or leg and the regenerant liquor is passed upflow at the rate of 16 gallons per minute per square foot and returned to the regeneration tank.

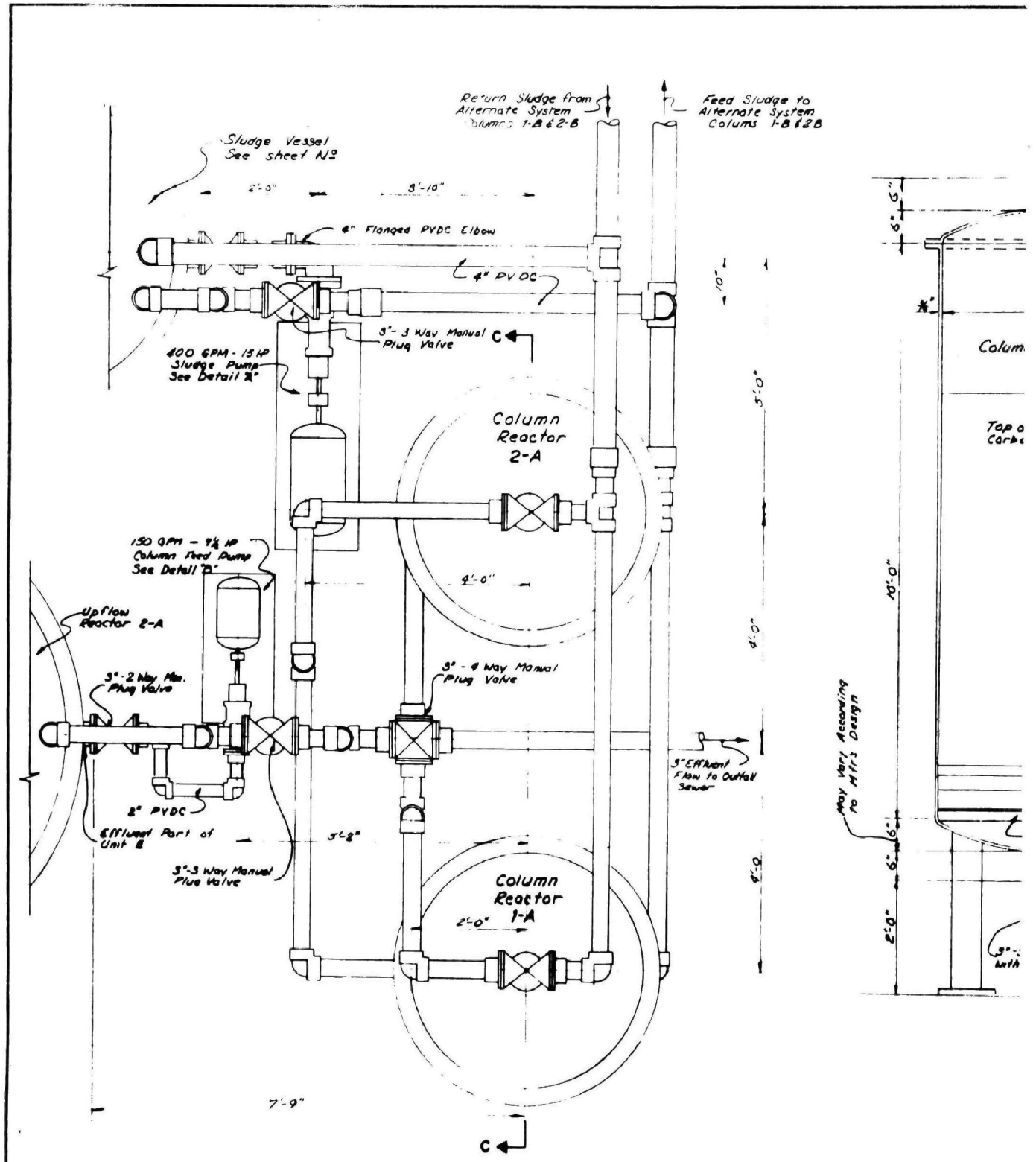

PLAN

SCALE: 1"=1'-0"

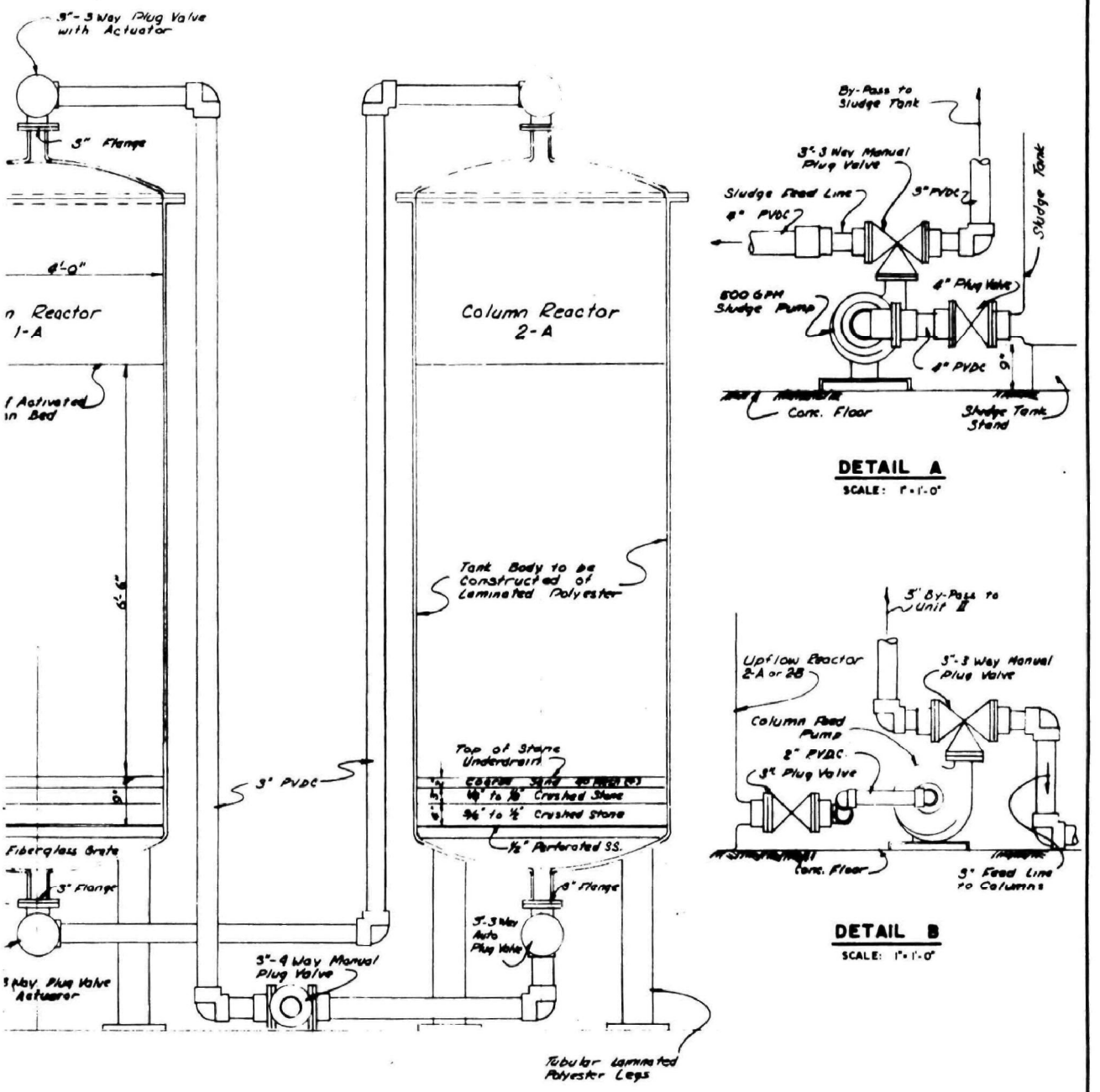

FIGURE 9

UNIT III

FRAM CORPORATION		
UNIT III	SCALE AS SHOWN	DRAWN BY R.R.V.
PALISADES INDUSTRIES INC. PEACE DALE, R.I.		
DATE SEPT 68	APPROVED BY	DRAWING NUMBER A-10035

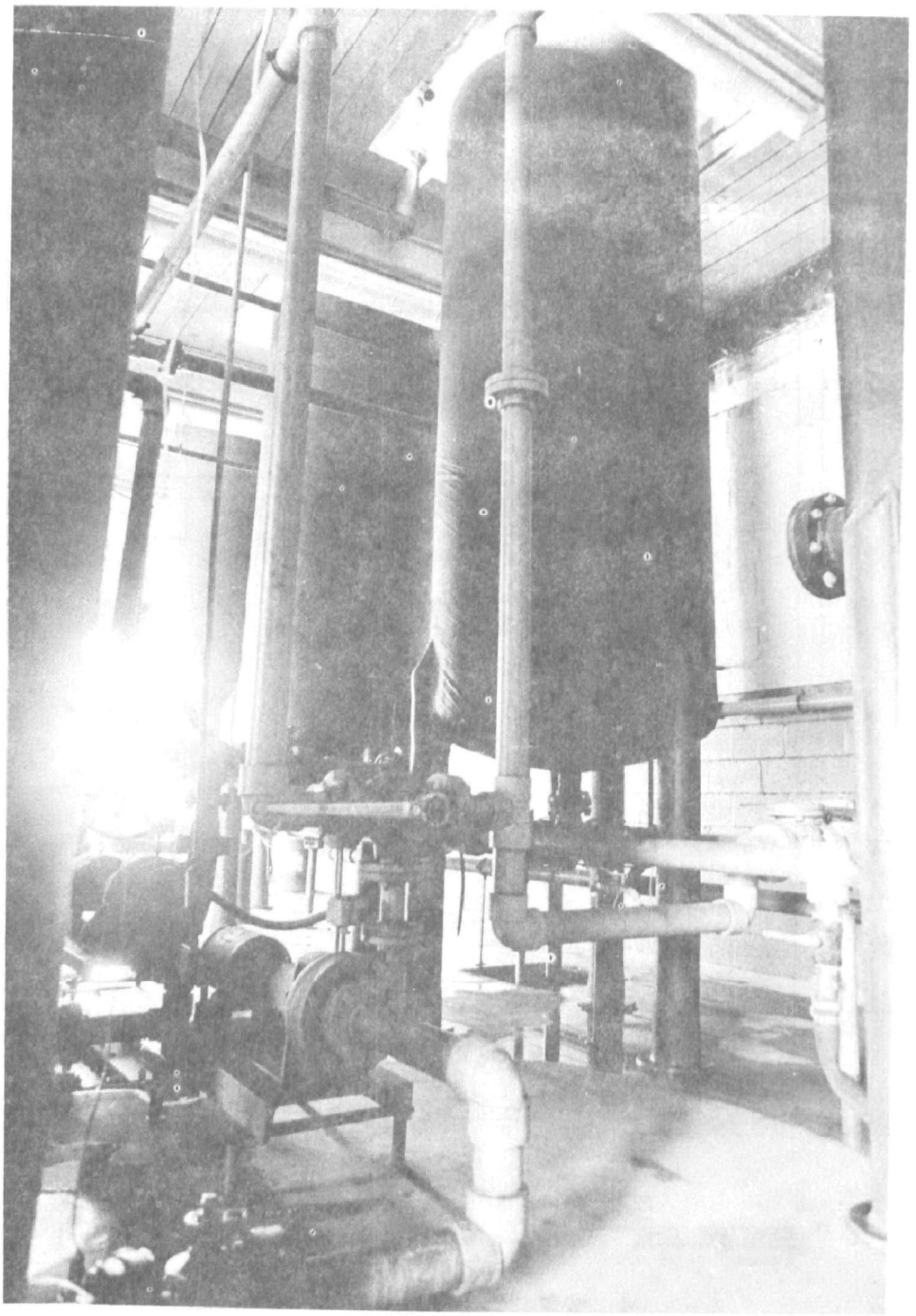

FIGURE 10

UNIT III

The organic material having undergone anaerobic stabilization and hydrolytic action with mostly low molecular weight substances is readily adsorbed by Unit III and readily oxidizable in the aerobic environment. After biological regeneration is accomplished by contacting the columns with the effluent of a second reactor wherein an active micro-organism culture is maintained, the effluent from Unit III is finally discharged into the Saugatucket River.

CONTROL SYSTEM

All valves are air operated and controlled by 110 volt solenoid valves. The control center is a mechanical relay type design to alternate the regeneration and contamination cycles manually or automatically based on volume throughput or time. Figure 11 shows the wiring diagram for the control.

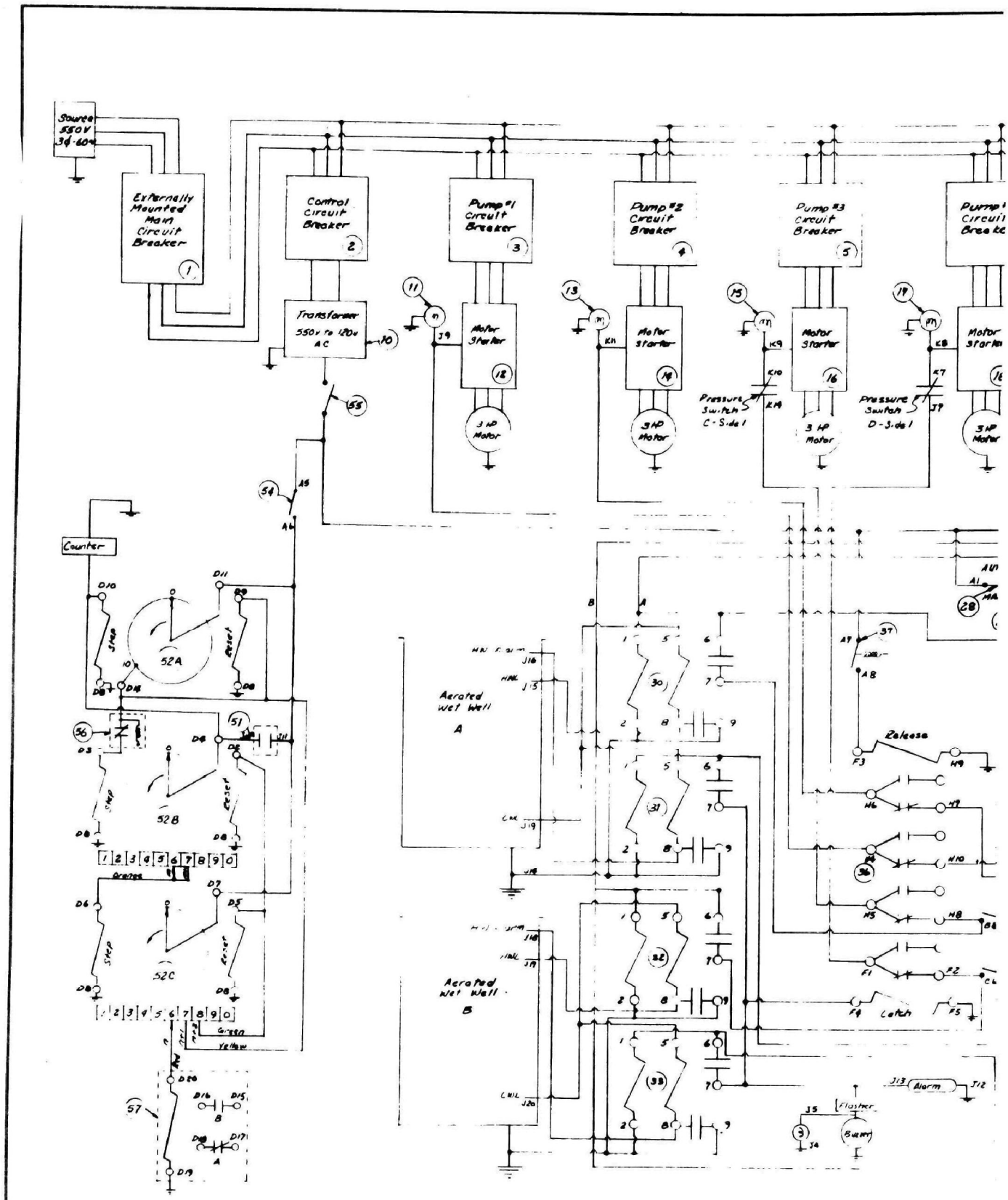

SCHEMATIC D
CONTROL SY

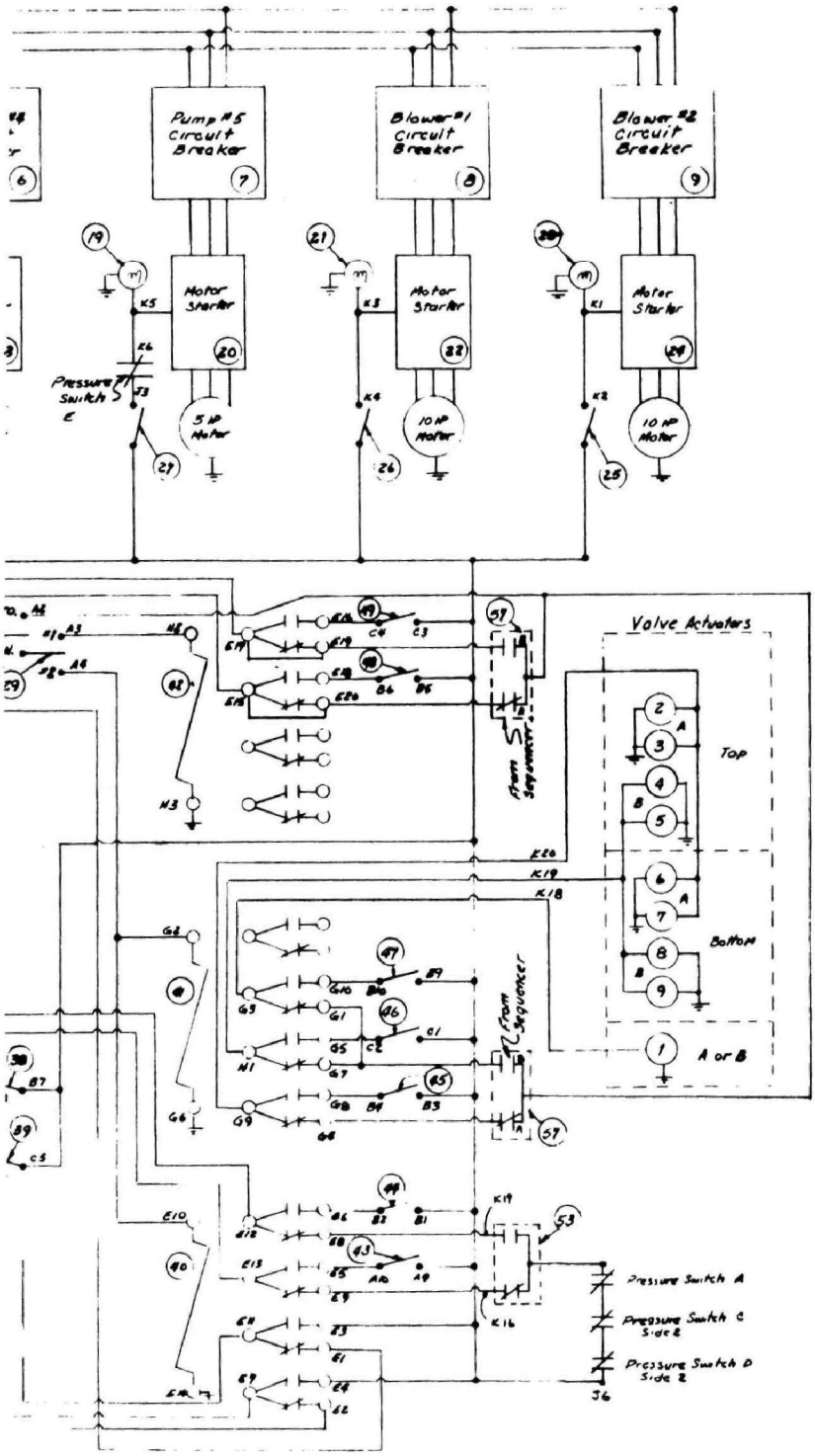

Materials Listing

1. GE TEF-136050 WL.
2. GE TEF-136015
3. GE TEF-136015
4. GE TEF-136015
5. GE TEF-136015
6. GE TEF-136015
7. GE TEF 136015
8. GE TEF 136015
9. GE TEF 136015
10. GE 9T 55Y69
11. Green Light, Dialco 51-1310-0212-301
12. GE CR 206B102/CR123C4.19A
13. Green Light, Dialco 51-1310-0212-301
14. GE CR 206B102/CR 123C 4.19A
15. Green Light, Dialco 51-1310-0212-301
16. GE CR 206B102/CR 123C 4.19A
17. Green Light, Dialco 51-1310-0212-301
18. GE CR 206B102/CR 123C4.19A
19. Green Light, Dialco 51-1310-0212-301
20. GE CR 206C 102/CR 123C6.95A
21. Blue Light, Dialco 51-1310-0214-301
22. GE CR 206C 102/CR 123C 12.5A
23. Blue Light, Dialco 51-1310-0214-301
24. GE CR 206C 102/CR 123C 12.5A
25. GE CR 2940-UB202B-NP-118406D
26. GE CR 2940-UB202B-NP-118406D
27. GE CR 2940-UB202B-NP-118406D
28. SPDT Spemco # 1187
29. SPDT Spemco # 1187
30. BW Type "LH" Relay
31. BW Type "LH" Relay
32. BW Type "LH" Relay
33. BW Type "LH" Relay
34. Red Light, Dialco 51-1310-0211-301
35. Audible Alarm 110v (as desired)
36. Potter & Bromfield KBP-17A6
37. SPST Spring Return, Spemco # 1196
38. SPST, Spemco # 1185
39. SPST, Spemco # 1185
40. Potter & Bromfield KHP 17A11
41. Potter & Bromfield KHP 17A11
42. Potter & Bromfield KHP 17A11
43. SPST, Spemco # 1185
44. SPST, Spemco # 1185
45. SPST, Spemco # 1185
46. SPST, Spemco # 1185
47. SPST, Spemco # 1185
48. SPST, Spemco # 1185
49. SPST, Spemco # 1185
50. GE 9T 56Y2873
51. Brooks Flow Meter w/ 1000 gal Pulser
52. Guardian Stepping Relays, Type MBR 120v AC
53. Square 'D', Mechanical Alternator
54. SPST, Spemco # 1185
55. GE CR 2940 UB202B-NP-118406D
56. Amperite 115C2 Delay Relay
57. Struthers-Dunn 211AXAP Relay

IAGRAM
STEM

FIGURE 11

CONTROLS

FRAM CORPORATION		
CONTROLS	SCALE No Scale	DRAWN BY P.P.V.
PALISADES INDUSTRIES INC. PEACE DALE, R.I.		
DATE NOV. 69	APPROVED BY	DRAWING NUMBER A-10027

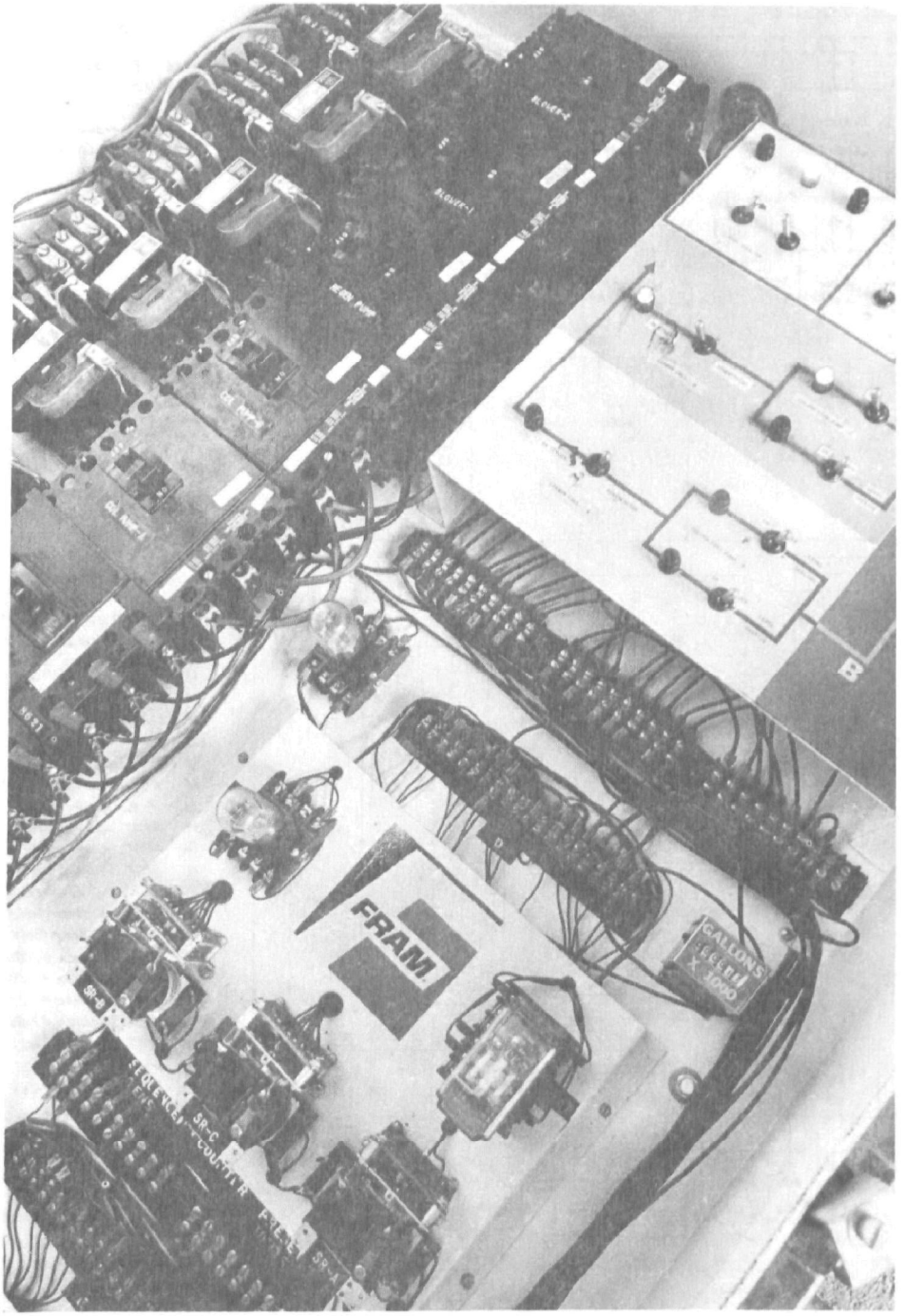

FIGURE 12

CONTROL PANEL

TABLE 3

Summary of Design Capacities

Unit I

Sweco Vibrating Screen - 12.5 square feet

Pit 1 - 1,200 gallons

Pit 2 - 6,400 gallons

Pit 3 - 21,000 gallons

Pit 4 - 5,200 gallons

Pit 5 - 1,400 gallons

Raw Waste feed pumps - 2 each - 150 gpm

Unit II

Feed Pumps - 2 each - 150 gpm

Upflow Reactors - 2 each - 3,800 gallons

Activated Carbon Change = 8,000 lbs. each

Wet Well - 2 each - 950 gallons

Unit III

Feed Pumps - 2 each - 150 gpm

Column adsorbers - 4 each - 950 gallons

Activated Carbon Change = 3,000 lbs. each

SECTION V

PRELIMINARY STUDY

As a preliminary study to the development phase of the project, the dyeing and finishing operations at Palisades Industries were analyzed and the characteristics of the Palisades wastewater effluent were evaluated. The information obtained, assessed the conditions prevailing prior to the operation of the new treatment system and was used as a comparative base in the final report.

PALISADES INDUSTRIES DYEING AND FINISHING OPERATION

The Palisades Industries, Inc. has eight modern automatic dyeing jigs and uses 75,000 to 125,000 gallons of water per day for the operation. The modern dye jigs serve the following functions in the Palisades' operation:

Boil-off and Scour: This removes all sizes and impurities in the greige cloth by the use of wetting agents, enzymes and detergents with appropriate rinses.

Bleaching: The cloth is further cleaned and prepared for dyeing with the use of hydrogen peroxide and silicates when necessary for light or bright shades, with appropriate rinses.

Dyeing: The prepared fabric is run from beam to beam through a concentrated mixture of dyestuffs and dispersing agents, until the desired shade is achieved, with appropriate rinses.

After Treating or Fixing Dyestuff: Some dyes require fixing with resinous chemicals so that they do not run when washed. This is dependent on their end use. The treatment is followed by a rinsing and removal of the wet dyed fabric from the dyeing machine.

Drying (First Phase in Finishing): The excess water and surface dyestuff are extracted with the use of vacuum extractors; then, the cloth is passed over a series of steam heated drying cans or through a gas fired loop dryer.

Finishing: The cloth is impregnated with resins, water repellents, soil retardants, wash and wear stabilizers, fire retardants, etc., chosen to impart certain desirable properties to the fabrics for their ultimate uses.

Make Up or Tubing Dept.: The cloth is inspected and tubed into original mill lengths for shipment.

Palisades receives woven greige mill products. It is necessary to remove all sizes, such as corn starch, polyvinyl alcohols, etc., that were first applied to the yarns to make it practical for greige mills to weave such yarns into a broad woven fabric. Their removal from the fabric imparts a heavy BOD load to the wastewater. In commission dyeing and finishing, the different fibers that are dyed and finished in variations of colors and finishes make it economically infeasible to collect and reuse any dyestuff or finishing chemicals. In order to further reduce labor costs, excess dyestuff is used to shorten the dyeing time or dyeing cycle, resulting in wastewater of dyestuff that is not completely exhausted, therefore more concentrated.

PALISADES WASTEWATER CHARACTERISTICS:

During January and February, 1970, 4-hour composite samples from Palisades Industries waste effluent were taken twice a week for analysis. The result is presented in Table 4.

Figures 13 and 14 illustrate these typical profile analyses, showing the wide fluctuations on hourly as well as on a daily basis.

Assuming that 75% of the COD was biodegradable and 50% of the organic nitrogen was available for metabolism, the nitrogen to BOD ratio for all samples analyzed was less than 5%. A nitrogen deficient environment would therefore prevail in the biological treatment of Palisades waste effluent. This result, supported by similar findings in April when Unit I of the system was in operation, eventually led to a decision of supplying nitrogen to the aeration tank for maintaining an active culture.

The amounts of nitrite and nitrate in the Palisades samples were generally insignificant. Since the samples were not analyzed immediately after collection, plus the fact that both nitrite and nitrate were not stable in the reducing environment of the industrial waste, the results were not reliable as those of other determinations. The amount of phosphates in all samples analyzed seemed more than sufficient.

TABLE 4

Analysis of Palisades Sample *
(All concentrations in mg/l)

Sample	Received	COD	NH_3-N	Org-N	Ortho-PO_4	Poly-PO_4	NO_2	NO_3
No. 1	1-20-70	10500	28.2	683.1	234	286	2.25	---
No. 2	2-3-70	7758	297	26.1	470	100	0.75	---
No. 3	2-5-70	2370	3.6	5.9	53	12	0.30	---
No. 4	2-12-70	2968	7.4	10.0	53	12	0.25	5.2
No. 5	2-17-70	2068	5.4	10.9	88	14	0.90	5.7
No. 6	2-19-70	1828	3.0	5.0	57	21	0.45	2.7
No. 7	2-24-70	1740	2.7	10.8	65	4	0.12	4.6

* All analysis performed according to "Standard Methods".

The nitrogen to COD ratio as well as phosphate to COD ratio for all Palisades' samples analyzed were calculated and listed in the following:

Sample	N/COD	P/COD
No. 1	6.8%	4.9%
No. 2	4.2%	7.4%
No. 3	0.4%	2.8%
No. 4	0.8%	2.2%
No. 5	1.1%	5.0%
No. 6	0.6%	4.3%
No. 7	1.0%	4.0%

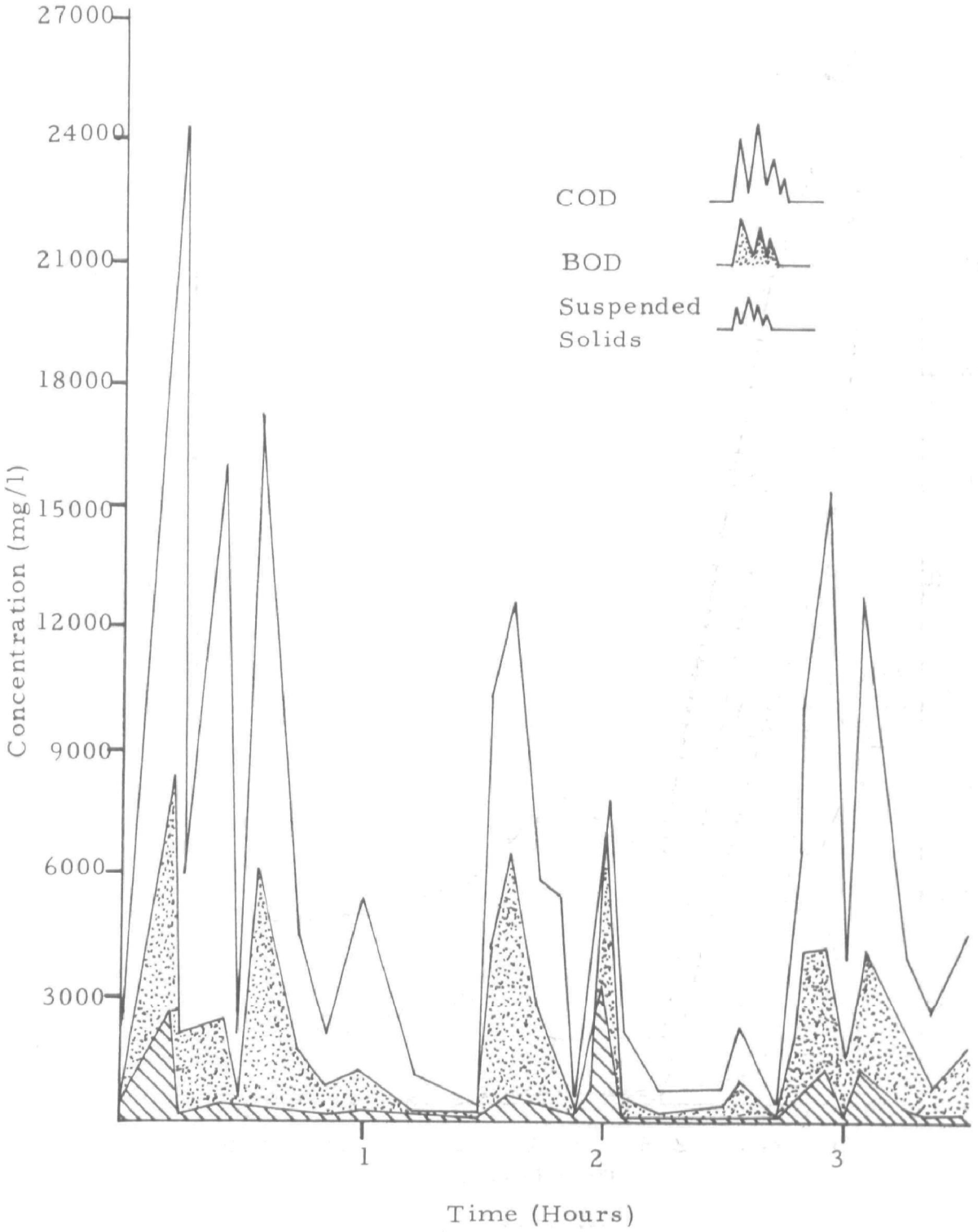

FIGURE 13

PALISADES INDUSTRIES - EFFLUENT PROFILE
COD, BOD AND SUSPENDED SOLIDS VERSUS TIME - 4/1/69

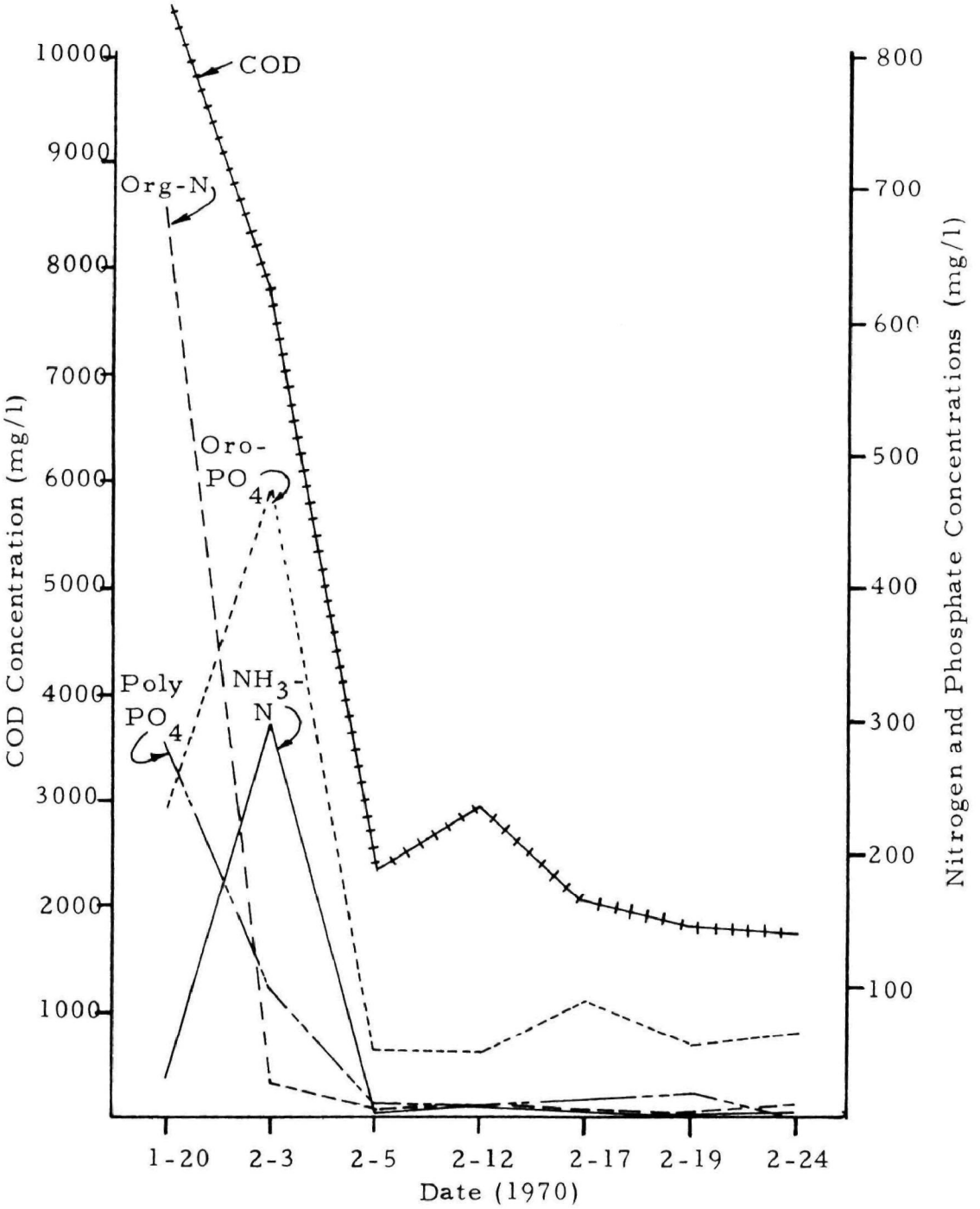

FIGURE 14

PALISADES INDUSTRIES
FOUR HOUR COMPOSITE EFFLUENT
PROFILE, COD, NITROGEN AND
PHOSPHATE vs. TIME

ACTIVATED CARBON EVALUATION

Another part of the preliminary study was the evaluation of four types of activated carbon: 12 x 20 mesh; Nuchar WV-G; Nuchar WV-L and Witco 718, 12 x 30 mesh.

In the carbon evaluation, equilibrium capacities and mass transfer coefficients were used as the major criteria for characterizing each type of carbon. The mechanical properties of hardness and durability were also taken into consideration in making a choice. Figures 15, 16 and 17 show the equilibrium isotherms when untreated Palisades effluent was used as the contaminating source. Nuchar WV-G exhibited the greatest adsorptive capacity of all other carbons tested on this type of contaminant.

Figure 18 shows that Darco 12 x 40 mesh carbon showed a slightly greater capacity than the Nuchar WV-G for the previously treated Palisades material; however, its mechanical properties still made it a poor choice for Palisades use.

The data in Figure 19 was used to calculate the mass transfer coefficients. The slope at zero time is proportional to the mass transfer rate. At a cross sectional flow rate of 0.25 GPM/ft^2, the following mass transfer coefficients were obtained:

Darco 12 x 20 mesh	=	0.70
Nuchar WV-G	=	0.68
Nuchar WV-L	=	0.67
Witco 718, 12 x 30 mesh	=	0.62

These results showed that all the above carbons exhibited the same fluid phase resistance to Palisades effluent material.

Based on this type of experimental information and other attrition rate tests, Nuchar WV-G proved the logical choice for Palisades. Other pertinent information regarding the Nuchar WV-G carbon supplied by the manufacturer is in the following:

Particle size	-	Effective size 0.55-0.75 mm. Uniformity coefficient = 1.80
Density	-	Wetted in water 1.4 gram/cc Apparent density = 27.5 lb/cu. ft. Bed density = 25.0 lb/cu. ft.
Void ratio	-	40%
Surface Area	-	N-BET method 1100 sq. meter/gram

FIGURE 15

EQUILIBRIUM ISOTHERM FOR VARIOUS CARBONS
CONTAMINANT = PALISADES' EFFLUENT

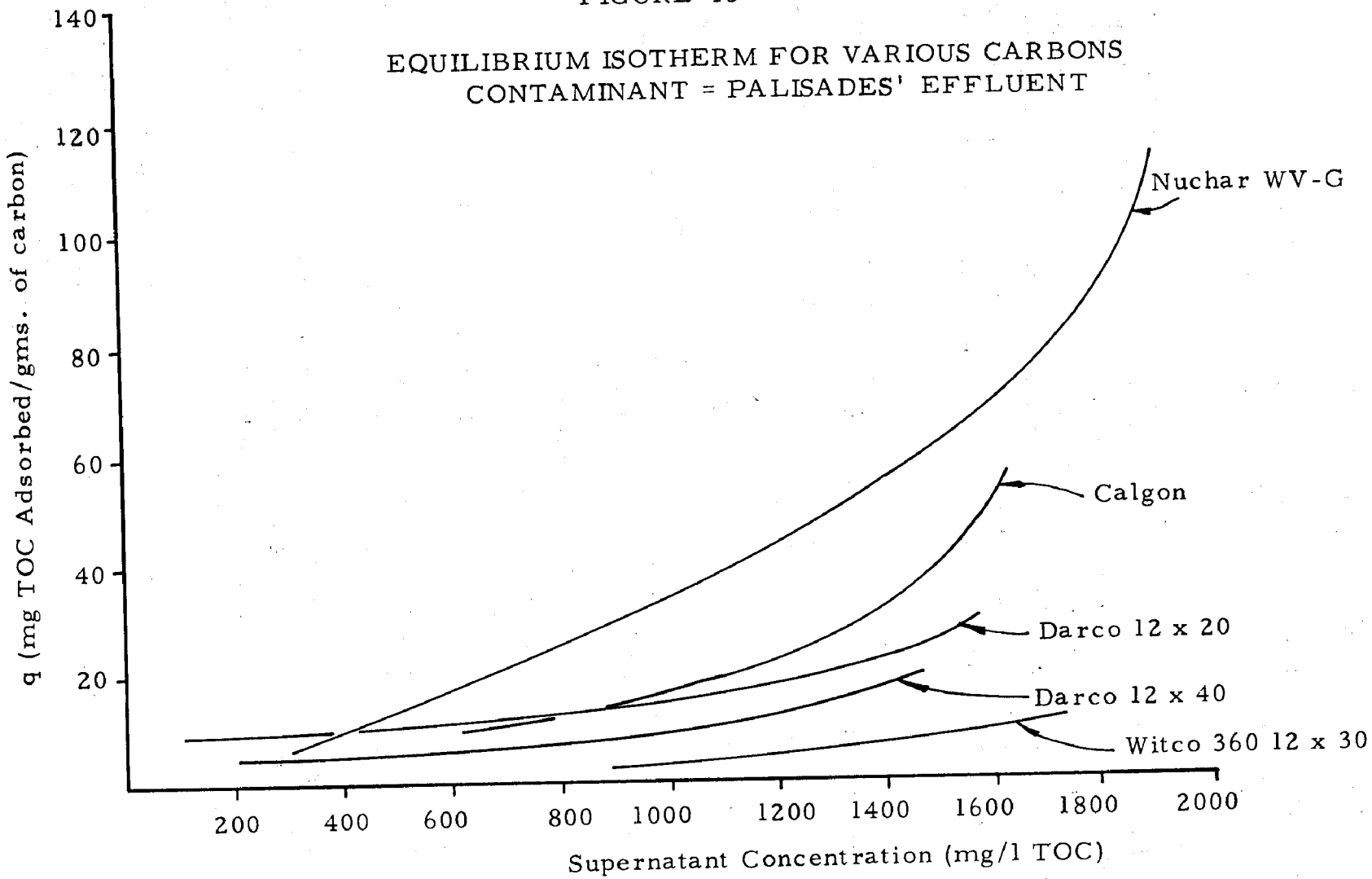

FIGURE 16

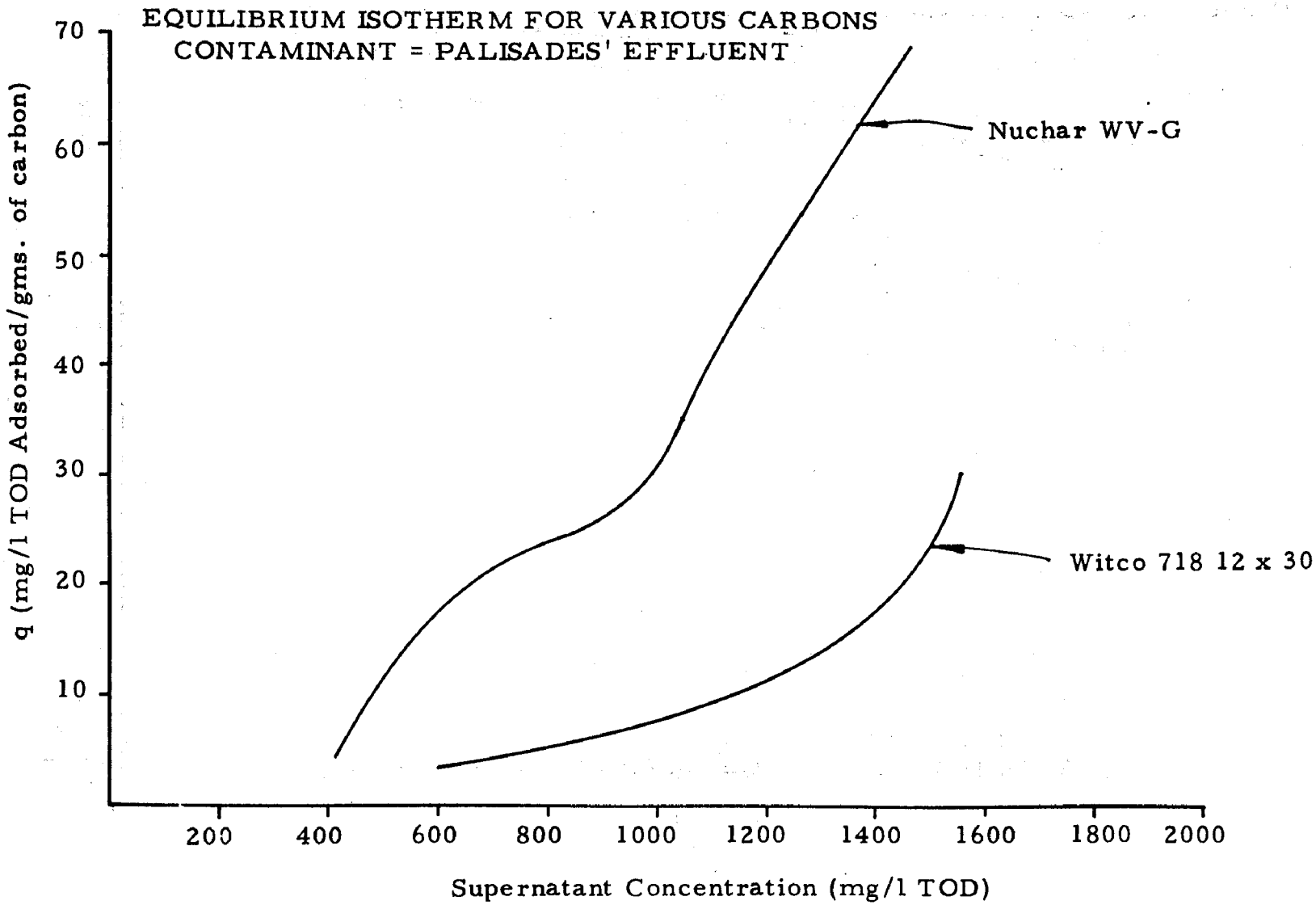
EQUILIBRIUM ISOTHERM FOR VARIOUS CARBONS
CONTAMINANT = PALISADES' EFFLUENT
q (mg/l TOD Adsorbed/gms. of carbon)
70
60
50
40
30
20
10
Nuchar WV-G
Witco 718 12 x 30
200
400
600
800
1000
1200
1400
1600
1800
2000
Supernatant Concentration (mg/l TOD)

FIGURE 17

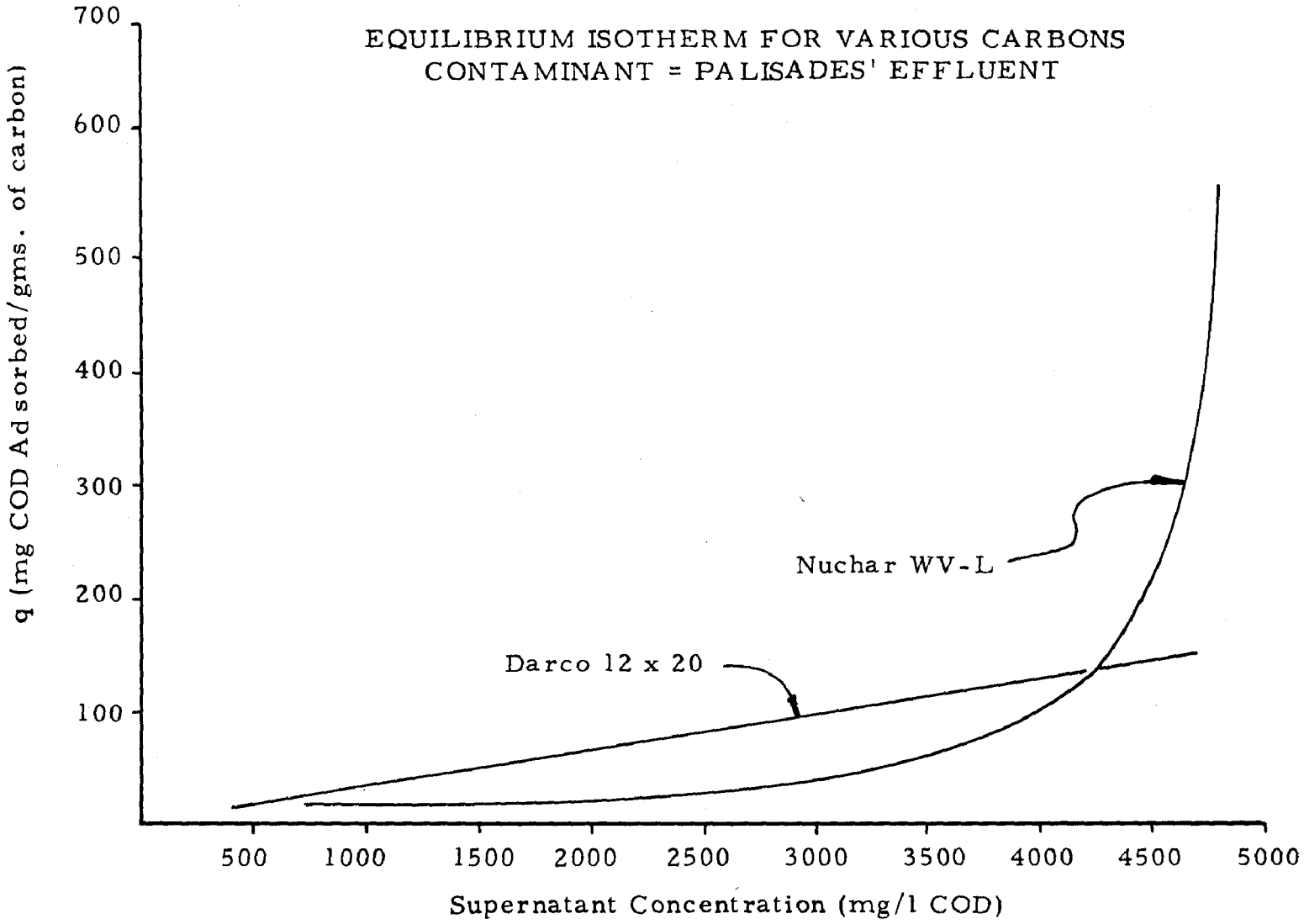
EQUILIBRIUM ISOTHERM FOR VARIOUS CARBONS
CONTAMINANT = PALISADES' EFFLUENT
q (mg COD Adsorbed/gms. of carbon)
700
600
500
400
300
200
100
Nuchar WV-L
Darco 12 x 20
500
1000
1500
2000
2500
3000
3500
4000
4500
5000
Supernatant Concentration (mg/l COD)

FIGURE 18

EQUILIBRIUM ISOTHERM FOR VARIOUS CARBONS
CONTAMINANT = PALISADES' REACTOR EFFLUENT

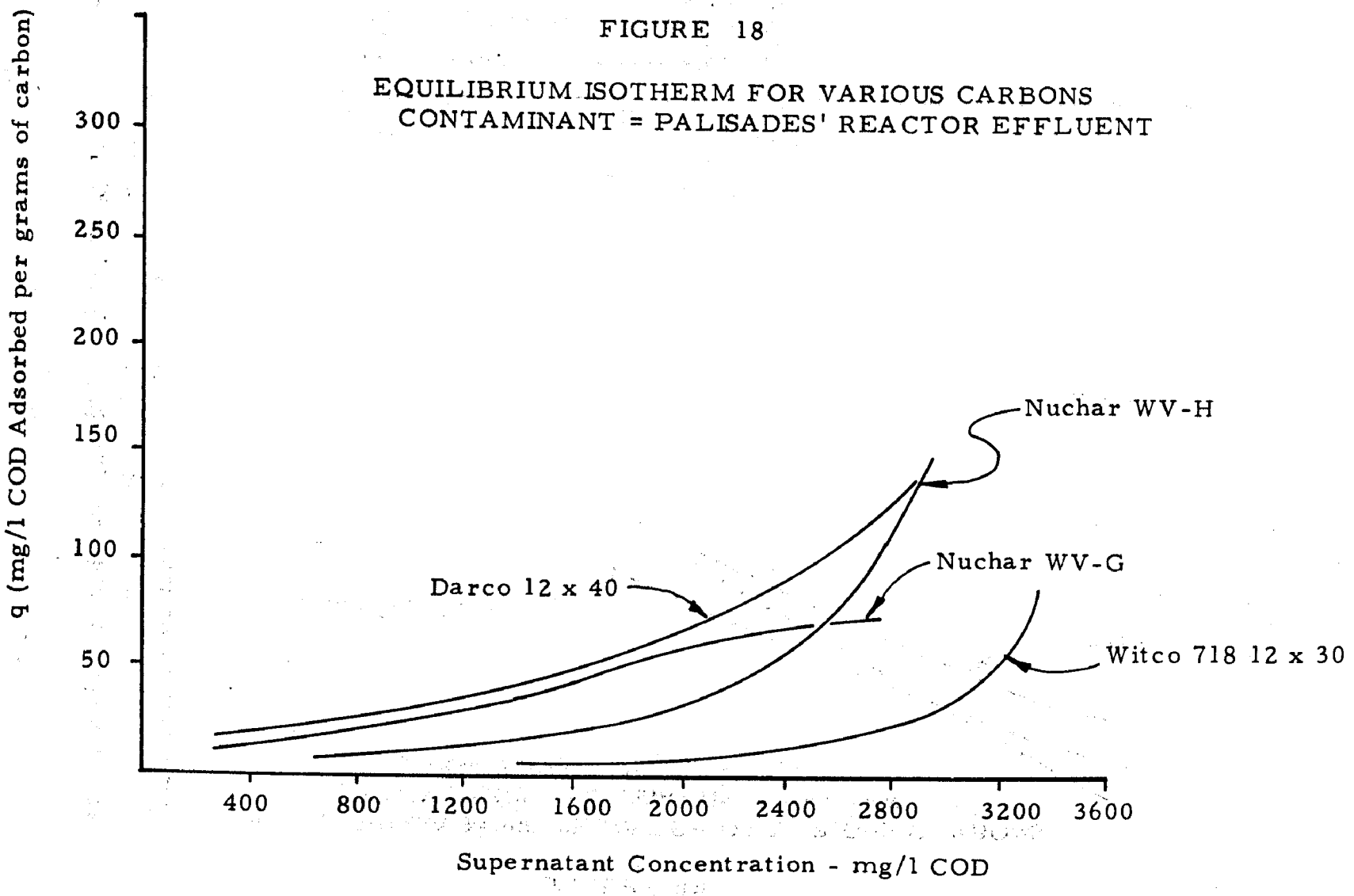

FIGURE 19

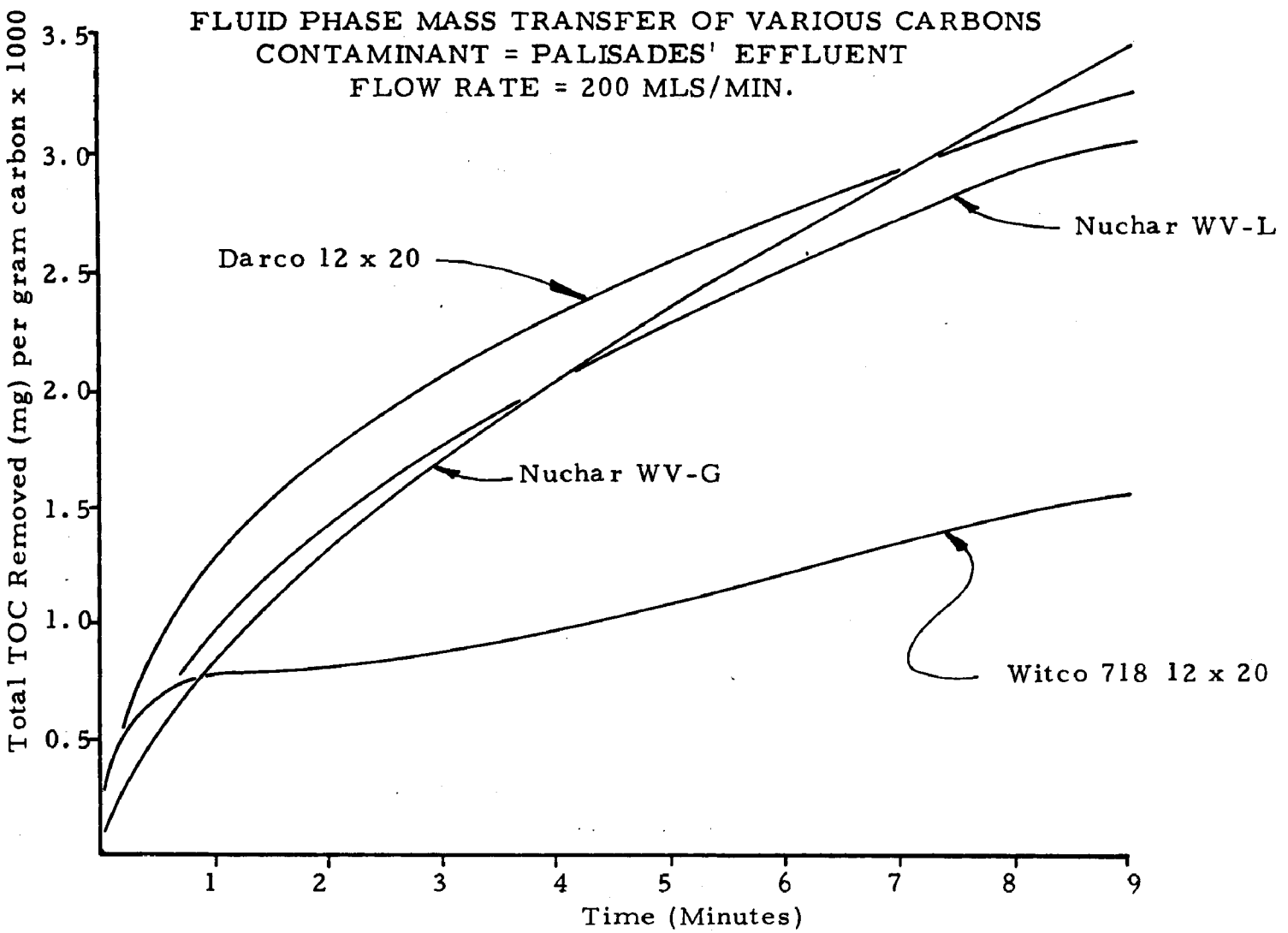
FLUID PHASE MASS TRANSFER OF VARIOUS CARBONS
CONTAMINANT = PALISADES' EFFLUENT
FLOW RATE = 200 MLS/MIN.
Total TOC Removed (mg) per gram carbon x 1000
3.5
3.0
2.5
2.0
1.5
1.0
0.5
Darco 12 x 20
Nuchar WV-L
Nuchar WV-G
Witco 718 12 x 20
1
2
3
4
5
6
7
8
9
Time (Minutes)

SECTION VI

OPERATION OF PROJECT

The objective of this phase of the project was to operate the system as planned and to collect pertinent information during the period. Figure 20 shows a summary of the project schedule. In order to collect the performance data for the treatment units individually and collectively, the operation was divided in several phases. The section describes the operation of each phase of the project, data collected and the respective schedule for each operation period. Discussion and interpretation of the data, as well as the evaluation of the system performance will be presented in a later section.

START-UP OF UNIT I: (March 23 - May 15, 1970

To start up the biological reactor, it was seeded with 2,000 gallons of primary effluent and 2,000 gallons of return activated sludge from a municpal sewage treatment plant. Small volumes of the Palidades wastewater were introduced daily into Unit I. A slow start-up was necessary for the biological treatment of industrial waste to avoid shock loading.

Samples were taken periodically for analysis of total organic carbon (TOC), total COD, soluble COD, total BOD, suspended solids, temperature, pH, D.O., and occasionally for soluble total oxygen demand (soluble TPD), NH_3-N, organic-N, ortho-PO_4 and poly-PO_4. In addition, flow measurement into Unit I was also made. Sludge volume index was also determined for many samples, to assist in the evaluation of Unit I performance.

Due to washout of solids and unstable performance in Unit I, the unit was reseeded on April 20, 1970. Unit I was partially drained before 2,000 gallons of returned sludge and 2,000 gallons of primary effluent were introduced. Immediately afterward, the Palisades wastewater was introduced into Unit I at a rate of about 3,000 gpd until it overflowed. This same low flow rate was maintained for three weeks as an acclimation period. The flow rate was increased to 5,000 gpd in later weeks and the full hydraulic load was reached later.

In conjunction with the reseeding procedure, nitrogen supplement in the form of NH_4Cl was added to the Palisades wastewater in Unit I. Approximately 0.5 lb. NH_4Cl/1000 gallons of Palisades wastewater was added in order to supply the need of 5 lb. nitrogen/100 lb. of BOD removed.

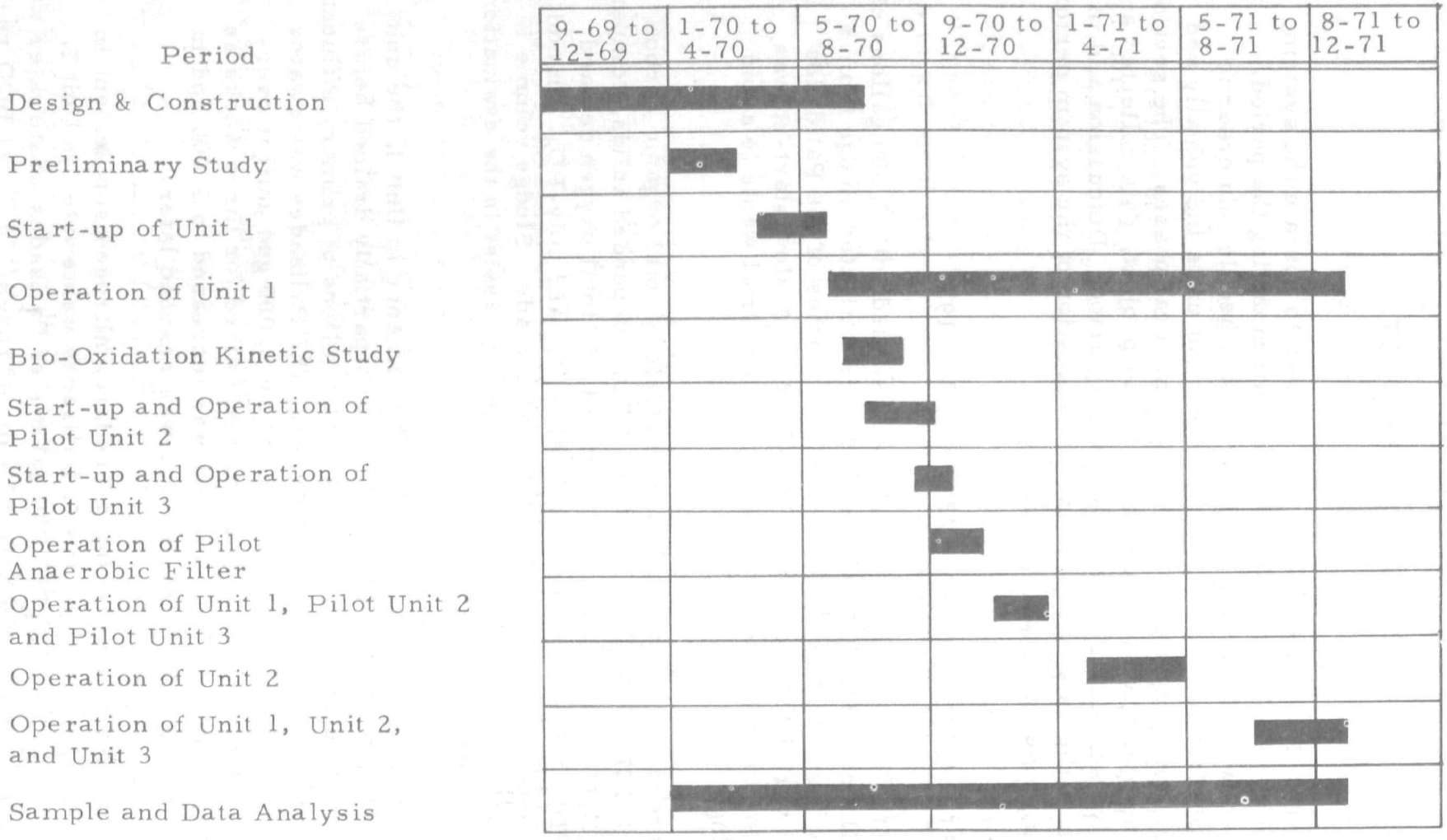

FIGURE 20

PROJECT SCHEDULE

Sampling and analysis programs were conducted similar to tests taken during the first start-up period.

The data collected in this phase of the project operation are presented in Appendix A.

OPERATION OF UNIT I: (May 16, 1970 - September 30, 1971)

With the success of the reseeding, Unit I was in use continuously throughout the entire project period except for routine interruptions. During normal operation, periodic samples were taken from Unit I for analysis. The frequency of sampling varied from daily to every half hour dependent upon the need of the respective period. For instance, occasional samplings of Unit I were sufficient to evaluate its performance when the primary objective of the project period was to test Unit II or III. On the other hand, when a material balance for organic carbon was deemed desirable for better evaluation of all units in the system, sampling as frequent as every half hour was necessary. Analysis of samples was generally limited to total and soluble COD, soluble TOC, MLSS and MLVSS, pH, temperature, D. O., and occasionally BOD, nitrogen and phosphates, as well as heavy metal concentrations.

In the period between June 26 and July 13, 1970, Palisades Industries, Inc. was shut down for vacation and annual maintenance. During this two week period it was decided to feed synthetic waste into Unit I to maintain the biological system. Sucrose was used as the carbon source supplemented by nitrogen (ammonium chloride) and phosphorus (sodium phosphate). Based on 5000 gpd flow and approximately 250 mg/l BOD removed, 11 pounds of BOD had to be fed to the tank daily. Sixteen pounds of sucrose (0.69 lb. BOD/lb. sucrose) were therefore used daily. The synthetic waste was prepared and stored in the small settling pit ahead of the aeration chamber. When the Palisades wastewater feed was resumed, Unit I had only a short adjusting period with a slightly inferior performance and it recovered quickly.

Data collected for the operation of Unit I are presented in Appendix A.

KINETIC STUDY OF BIO-OXIDATION OF PALISADES' WASTEWATER: (June - July, 1970)

Two bench-top, batch-feed aerators were set up for a study of the bio-oxidation process taking place in Unit I. Biological solids were har-

vested from the Unit I aeration chamber and were distributed in various amounts into the bench-top aerators. The wastewater of Palisades Industries, Inc. was then added. The mixed liquors from both aerators were sampled periodically for COD and MLVSS analysis until the stationary phase of solid growth and COD removal was reached. The result of this study did not evaluate the performance of the project system. The information obtained from this study, however, was useful for predicting the performance of Unit I in the scale-up process.

Data collected is included in Appendix C.

START-UP AND OPERATION OF PILOT UNIT II: (July 6 - August 6, 1970)

Before the full-scale Unit II was tested, it was decided to install a laboratory carbon column unit, on-site for testing. Various flow rates and duration of various cycles were evaluated to ascertain the maximum efficiency level that could be obtained. The performance data that resulted from the operation of this pilot unit were used in establishing an operational schedule for the full size Unit II testing.

The unit consisted of a 55-gallon drum holding 100 pounds of Nuchar WV-G activated carbon supported by gravel at the bottom. The drum was covered with an airtight lid and was provided with a sampling port in the mid-depth of the carbon layer. The effluent mixed liquor from Unit I was introduced into the pilot unit at a rate of 1.5 gpm/sq. ft. An upflow mode was used in the treatment cycle. During an 18-day period, a total of 6 treatment cycles and 6 regeneration cycles were conducted with variable durations in the treatment and regeneration cycles. The operation was terminated to allow the replacement of the spent carbon with virgin carbon and the testing was resumed on July 29.

During the test periods, samples were collected every two hours in the day for total COD, MLSS, MLVSS, BOD, volatile acid, soluble organic carbon and inorganic carbon analysis. The data obtained from this project are included in Appendix A.

START-UP AND OPERATION OF PILOT UNIT III (August 13 - September 11, 1970)

The 55 gallon drum carbon reactor used in pilot Unit II was modified to simulate adsorption-aerobic regeneration of Unit III for on-site testing.

During the regeneration cycles, the waste liquid in the system was recirculated in a closed loop by continuously pumping the waste liquid into a 55-gallon aeration tank and returning it to the carbon bed. In doing this, the problem of directly introducing air to the carbon bed was eliminated. Two series of testing were conducted, one from August 12 to August 24 and the other from September 3 to 11, 1970.

Sampling and analysis were identical to the pilot Unit II, with the exception that no volatile acid determinations were made. The data for this part of the project are also presented in Appendix A.

OPERATION OF PILOT ANAEROBIC FILTER: (September 16-18, September 24 - October 2, 1970)

Although an anaerobic filter operation was not part of the plan of this project, the potential of such a treatment process was recognized after it was noticed that the anaerobic carbon column had performed far better than the aerobic column. The outcome of this operation was not included in the evaluation of the entire treatment system. However, an anaerobic filter operation appears as a recommendation in the conclusions of this project report.

The unit consisted of a 55-gallon drum with 100 pounds of carbon supported by gravel. The lower half of the carbon bed was seeded with 1/2 liter of well digested sludge. Unit I effluent was introduced into a holding tank with a 55-gallon capacity at a rate of 1.5 GPM ahead of the filter. Flow was introduced into the filter from the bottom to provide an upflow mode of operation. The filter was covered with an air-tight lid to maintain an aerobic condition. The flow at 1.5 GPM was equivalent to a flow rate of 0.57 GPM/sq. ft. of bed surface area. The unit was operated continuously without a resting period. Sampling and analysis were similar to that in the operation of Pilot Unit II. Data collected are included in Appendix B.

START-UP AND OPERATION OF UNIT I - PILOT UNIT II - PILOT UNIT III IN SERIES (November 4 - December 11, 1970)

During this phase, a new pilot Unit III was built, but on a smaller scale than the final production unit. The two plexiglass columns of Unit III, five inches in diameter with a three foot bed depth, held approximately eleven pounds of carbon. A 55 gallon pre-aeration tank between Pilot Unit II and Pilot Unit III served as the biological

reactor for Pilot Unit III aerobic regeneration. Unit I and Unit II were not changed for this phase of the project. The start-up rate was 0.75 GPM/ft^2 of Pilot Unit II surface area and was later increased to 1.0 GPM/ft^2. Pilot Unit II was seeded with one liter of digested sludge. Because of holidays and weekends, the pilot plant was not operated with alternate 24 hour treatment and regeneration cycles.

Sampling and analysis in this phase of operation were identical to those in previous operations. Data collected is presented in Appendix A.

OPERATION OF UNIT II (February 3 - April 27, 1971)

The full scale unit replaced the pilot Unit II during this phase of the project. Only one column of Unit was filled with approximately 8000 pounds of Nuchar WV-G carbon for preliminary testing. This carbon in the test column was washed to remove carbon fines.

Because the overflow device was not ready for operation in the start-up period, Unit I was pumped through Unit II for seven hours during the day while the treatment plant was in operation. Flow was stopped for the remainder of the day plus another full day before another treatment cycle was resumed. Consequently the operation was seven hours treatment followed by 41 hours of regeneration except on weekends where such regeneration period was extended for one more day.

After the overflow device was installed and working properly, the treatment cycles were extended to 24 hours or longer. During the period from March 17 to April 29, combinations of two days treatment with 1 1/2 days regeneration and one treatment with 1 1/2 days regeneration were tested. With the exception of a few working days interruption in the middle of March to install the automatic overflow device, Unit II was operated continuously for almost three months.

Influent and effluent samples of Unit II were taken every 30 minutes, Samples were composited every one and one-half hours. Soluble TOC, total COD, soluble COD (soluble COD analysis was abandoned in the later part of the study) and solid concentrations of samples were determined. These data are included in Appendix A of this report.

OPERATION OF UNIT I - UNIT II - UNIT III IN SERIES (July 12 - September 30, 1971)

There was a long shutdown period of the Palisades treatment system

starting in May. The operation of all units was interrupted except for Unit I. An earlier decision was made that the column of Unit II should be shut down due to excessive accumulation of fibrous material in the carbon bed. During the shutdown period, the spent carbon was replaced by virgin carbon washed of carbon fines, while the spent carbon was washed and placed in the other column. The column containing approximately 8,000 pounds of virgin carbon was designated as Leg A and the other column with spent carbon as Leg B. The full scale Unit III replaced the pilot unit. 3,000 pounds of virgin carbon were used to fill each of the four columns of Unit III. A SWECO vibrating screen was installed ahead of Units I and II to remove fibrous and inert solids. The electrical control system and the piping of the system were revised also in this period.

On July 12 the start-up period began when approximately 2,000 gallons of the mixed liquor from Unit I drained and replaced by 2,000 gallons of returned sludge from a municipal sewage treatment plant. Aeration was maintained overnight without flow. During the period of July 13 through July 16, a 60 GPM flow of Palisades' wastewater was introduced through Units II and III for a few hours a day. The flow was stopped for the remainder of the day. This time period together with the next full day served as the regeneration period. Legs A and B of the system were operated alternately. This first week operation was primarily for acclimation and start-up in order to detect any possible difficulty in the operation of the entire system.

After the initial start-up, a regular testing program was initiated beginning on July 19. Sampling and analysis schedules were identical to the previous testing period. In addition, BOD was determined for samples collected in the last two weeks. Apendix A, Table 7 shows the data collected for this period.

The operation in this period was interrupted from August 5 to 23 for aerator repairment. All together, two months of operation of the entire system were conducted. The evaluation of this part of the operation was most vital to the entire program.

SAMPLE ANALYSES

Because of the extensive sampling adopted for this project, the analytical work was done in three different places. A laboratory was set up on site on a floor directly above the treatment plant. Analyses such as TOD, pH, temperature, aludge, settlable volume were conducted in this field laboratory. Samples collected were then taken to the Sanitary

Engineering Laboratory at the University of Rhode Island for determinations of total and soluble COD, MLSS and MLVSS, BOD, nitrogen and phosphates, heavy metal and volatile acid concentrations. Samples were also taken to Fram Corporation for occasional analysis of BOD and TOD. All analyses were performed according to "Standard Methods".

SECTION VII

EVALUATION AND DISCUSSIONS

The operation of this project was divided in several phases. Therefore, evaluation and discussions of the treatment system are presented for each phase accordingly The evaluation of the entire treatment system and the projection of treatment requirements for the Palisades Industries, Inc. wastewater are presented in the conclusion.

UNIT I EQUALIZATION - AERATION TANK

The performance of Unit I as an equalization tank and as a dispersed growth biological reactor was evaluated. When Unit I was first started, a low flow, lower than a 9000 gpd flow rate, was maintained. The COD influent data showed that the equalization of the sewage strength in Unit I was quite successful. Soluble COD in the aeration tank usually stayed in a range of 550 to 700 mg/l. Preliminary studies had shown a COD profile of 1740 to 10,500 mg/l before equalization. Unit I was therefore considered successful as an equalization tank. With a flow rate above 9000 gpd, however, the unit was less effective. Although an hourly variation of organic concentration in terms of total organic carbon, TOC, was not considered significant, the daily variation was great enough to cause concern in the operation of the subsequent units.

Equalization of pH of the Palisades' wastewater was adequate. Unit I mixed liquor never had a pH outside of the range of 5.9 to 9.8 throughout the entire project period. Most of the time a neutral pH was obtained. A high dissolved oxygen concentration was maintained at all times in Unit I indicating that the aeration supply was adequate, regardless of the hydraulic loadings and organic concentrations.

The growth of the biological solids in Unit I was quite slow because of the resistant nature of the dye wastes to biological oxidation while the washout rate of the solids occurred rapidly at high hydraulic loadings. In addition, nitrogen and phosphorus analyses of the Palisades' wastewater (Table II in preliminary study and Table 1B of Appendix B) indicated a lack of nitrogen for biological growth. As a result, nitrogen supplement in the form of ammonium chloride (NH_4Cl) was added to the mixed liquor in Unit I. Based on the

existing amount and a need of 5 pounds of available nitrogen per 100 pounds of BOD removed, approximately 0.5 pound NH_4Cl/1000 gallons of wastewater was required.

Prior to the nitrogen supplement program, observations showed that the biological flocs were mostly inactive. The small concentration of active biological flocs could not support any significant population or protozoa. Higher forms of animals such as rotifiers and worms were not present. The washout and nitrogen deficit were responsible for the absence of these flocs. After the initiation of the nitrogen supplement program and a careful control of the hydraulic flow to avoid shock loading, typical activated sludge flocs were maintained throughout the study period. A mixed population with balanced numbers of prey and predator always existed. Free swimming ciliates were abundant, particularly in the days of higher organic loading, wherein stalked ciliates, rotifers and worms were found often during the days of lower organic loading.

Solid analyses showed that the biological solids concentration in the aeration chamber was rather low in Unit I most of the time (average 200 mg/l). This was particularly true when the flow rate was increased. In spite of this, a steady solid concentration was maintained and a consistent percentage of COD removal was obtained. Evidently, a steady state condition was established in Unit I. Because of the low solids concentration, very little sludge could be returned from the clearwell (settling chamber). The aeration chamber was therefore operated as a dispersed growth biological reactor. The sludge volume index was high throughout the study which was typical for a dispersed growth reactor with high organic loadings.

As will be seen later in the evaluation and discussion of the growth-kinetic study, the performance of Unit I in organic removal can be improved by increasing the biological solids concentration in the aeration chamber. Unfortunately, no provision was made in the Unit for the practice of return sludge. This practice, however, should be considered in future modifications of the treatment system at Palisades Industries, Inc.

Analyses of heavy metal contents in the Palisades' wastewater showed insignificant levels. Zinc, iron, copper, silver and nickel were all below 1.0 mg/l. It was felt that metal concentrations in the Palisades' wastewater would not vary significantly and their presence should not have any interference in the biological process. Studies reported in the literature show allowable heavy metal concentrations in biological treatment processes higher than those found in the Palisades' wastewater.

Organic removal in Unit I was measured in reductions of TOC, total COD, soluble COD or BOD. Being a dispersed growth reactor with no return biological solids, the organic removal of Unit I varied with the flow. The following Tables V, VI, VII & VIII summarize the performance up to August 7, 1970. The data of TOC removal are plotted in Figure 21.

Figure 21 indicates that within the range of flow rates investigated, TOC removal was from 45% to 75%. It also indicates that the efficiency of removal decreased gradually as the flow rate increased. The projected TOC removal at full hydraulic load of 125, 000 gpd was about 25%. At a hydraulic load of 75, 000 gpd, the TOC removal was projected to be 35%. This projection agrees with actual experimental data in later studies.

The respective total COD removal was much lower. This was expected because biological solids synthesized at the expense of the organics contributed to the COD. In fact, soluble COD removal was much higher at all flows. This was an indication of the resistant nature of the Palisades' wastewater towards biological treatment. However, for the removable fraction of the organic material, a higher percentage of removal was achieved by Unit I. The projected BOD removal at 75, 000 gpd and 125, 000 gpd flows would be 42% and 35% respectively.

It was observed that as flow rate increased, the rate of solid washout increased correspondingly. It was difficult to grow enough biological solids in Unit I to keep up with the loss through washout. Besides the fact that increased flow rate reduced aeration time, lower biological solids content in the aerator was also responsible for the lower organic removal in Unit I. According to Monod reaction kinetics (3):

$$\mu \text{ specific growth rate} = \frac{1}{Xm} \quad \frac{d\,Xm}{dt}$$

$$= \mu \text{ max.} \quad \frac{Xc}{Kc + Xc}$$

where Xm and Xc are respectively solid and substrate concentrations

μ max is the maximum specific growth rate

Kc is the substrate concentration at which the growth rate is one-half of the maximum specific growth rate.

TABLE 5

Performance of Unit I: TOC and Temperature

Date	Influent (mg/l)	Effluent (mg/l)	% Reduction	Temperature (degrees C.)
4/29	366	135	63.2	18
5/4	493	143	71.0	19
5/5	500	122	75.6	19.5
5/6	491	136	72.3	19
5/7	435	137	68.6	18
5/8	450	145	67.7	19.5

Flow Rate = 3,000 gpd
Average % Reduction = 69.7%
Average Temperature = 18.8° C.

5/19	291	108	63.0	19.5
5/20	363	167	54.0	21.5
5/21	386	167	56.7	
5/22/	336	142	57.8	
5/26	406	171	57.9	21

Flow Rate = 5,000 gpd
Average % Reduction = 55.4%
Average Temperature = 20.7° C.

TABLE 5 Performance of Unit I: TOC and Temperature (Continued)

Date	Influent (mg/l)	Effluent (mg/l)	% Reduction	Temperature (degrees C.)
6/11	462	214	53.6	26
6/17	370	210	43.3	24
6/18	332	191	42.5	24.5
6/19	392	189	51.7	25.5
7/14	502	260	48.3	25
7/15	340	180	47.1	26
7/16	375	190	49.3	26.5
7/17	285	160	43.9	27
7/13	408	188	54.0	24

Flow Rate = 9,000 gpd
Average % Reduction = 47.5
Average Temperature = 25.6° C.

8/3	360	207	42.5	31
8/4	637	355	44.3	32.5
8/5	553	307	44.5	33.5
8/6	420	250	40.5	32.5
8/7	450	280	37.8	32.5

Flow Rate = 30,000 gpd
Average % Reduction = 41.7
Average Temperature = 32.4° C.

TABLE 6

Performance of Unit I: Total COD

Date	Flow Rate (gpd)	Influent (mg/l)	Effluent (mg/l)	% Reduction
5/5	3000	1477	580	60.7
5/6	3000	1448	596	58.9
5/13	5000	967	359	52.6
5/19	5000	847	417	50.7
5/20	5000	967	444	54.0
5/27	9000	1204	733	39.2
7/14	9000	1515	858	43.4
7/15	9000	1241	798	35.6
7/18	20000	1229	767	37.5

TABLE 7

Performance of Unit I: Soluble COD

Date	Flow Rate (gpd)	Influent (mg/l)	Effluent (mg/l)	% Reduction
5/5	3000	1284	344	73.1
5/6	3000	1313	359	72.6
5/19	5000	734	264	64.1
5/20	5000	812	287	64.6
5/27	9000	1082	532	50.8
7/14	9000	1437	691	52.0
7/15	9000	1094	586	46.3

TABLE 8

Performance of Unit I: Total BOD

Date	Flow Rate (gpd)	Influent (mg/l)	Effluent (mg/l)	% Reduction
5/5	3000	570	62	89.0
5/6	3000	540	67	89.5
5/19	5000	328	61	81.5
5/20	5000	183	52	71.6
5/26	5000	266	67	75.0
5/27	9000	317	112	64.7
7/14	9000	274	120	56.2
7/15	9000	242	102	57.9
7/28	20000	287	160	44.3

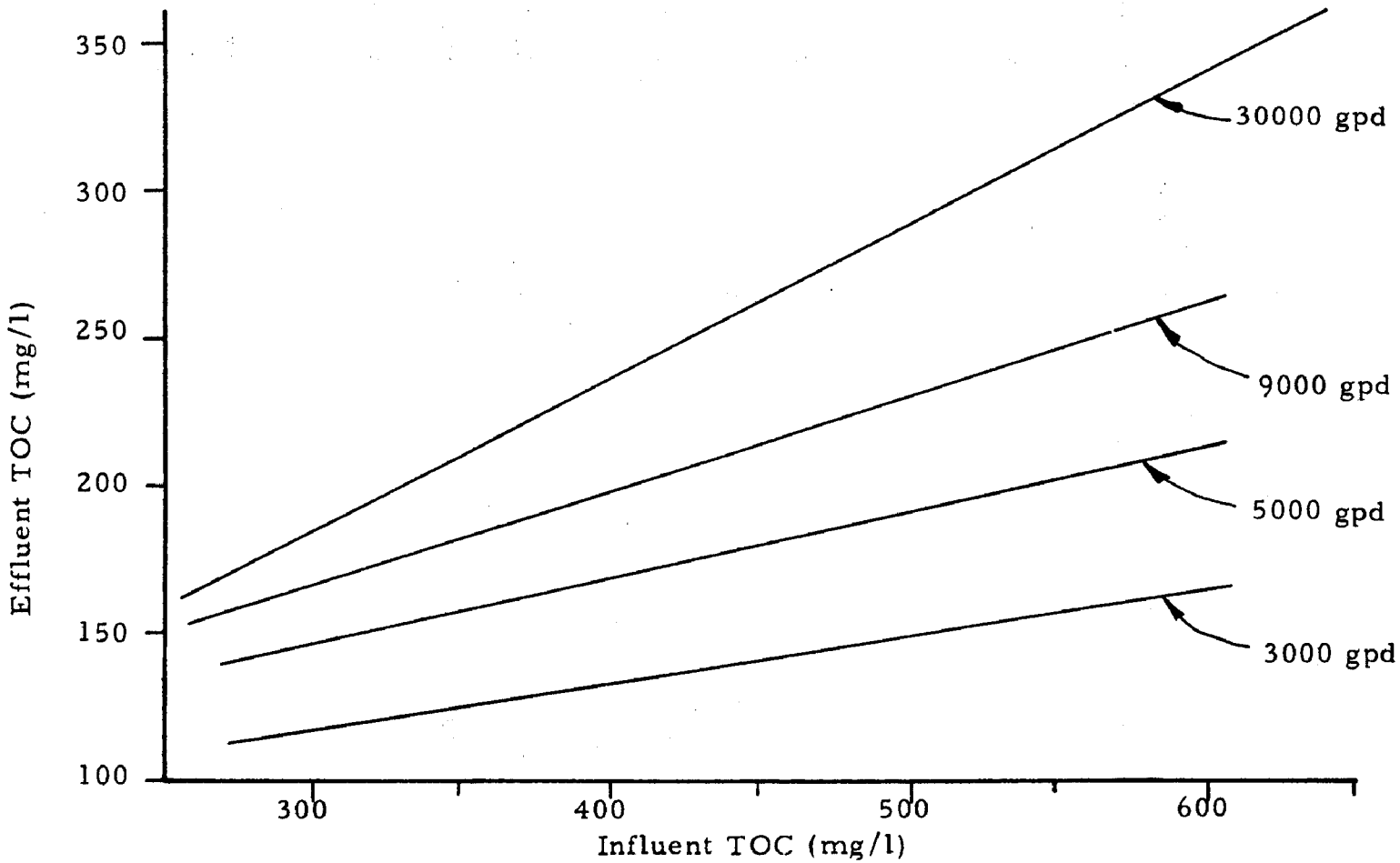

FIGURE 21

REMOVAL OF TOTAL ORGANIC CARBON BY
UNIT I AT DIFFERENT FLOW RATES

Appendix C shows the results of a kinetic study using bench-top aerators fed with Palisades' wastewater. These results are plotted in Figure 22. The specific growth rates calculated from the slopes of these curves were then plotted versus the respective organic concentrations as in Figure 23. The estimated maximum growth rates for the two reactors were 5.8×10^{-2} and 7.0×10^{-2} hr.$^{-1}$. The average 6.4×10^{-2} hr.$^{-1}$ was low compared to a conventional activated sludge treatment process having a specific growth rate of approximately 9.0×10^{-2} hr.$^{-1}$. Also, the solid yield factors for the two reactors were respectively 0.29 and 0.28 which were low compared to 0.5 for an activated sludge treatment process. This information substantiates the fact that Palisades wastewater contains a large amount of non-biodegradable or resistant organics.

Using the data from Reactor B, the rate of solid growth and the rate of organic removal (in terms of COD) can be expressed as:

$$\frac{d\,Xm}{dt} = 7.0 \times 10^{-2} \quad \frac{(Xm \cdot Xc)}{77 + Xc}$$

$$\frac{-d\,Xc}{dt} = 7.0 \times 10^{-2} \quad \frac{(Xm \cdot Xc)}{21.6 + 0.28\,Xc}$$

Both solid growth rate and organic removal rate could be enhanced by increasing the solid concentration in Unit I. It is therefore important to consider a modification of the Palisades treatment system by adding a sludge return facility in Unit I for permanent operation

PILOT UNIT II - CARBON ADSORPTION AND ANAEROBIC REGENERATION:

The data collected in this phase of the study are presented in Tables 3A and 3B in Appendix A, and are summarized in Figure 24. Series A used spent carbon with a total of 6 treatment and regeneration cycles during an 18-day period. During this phase of the study, the treatment efficiency in TOC removal fell offquickly and approached equilibrium after approximately four complete cycles. The declining efficiency was

FIGURE 22

CHANGE OF COD AND MLVSS RESPECT TO TIME

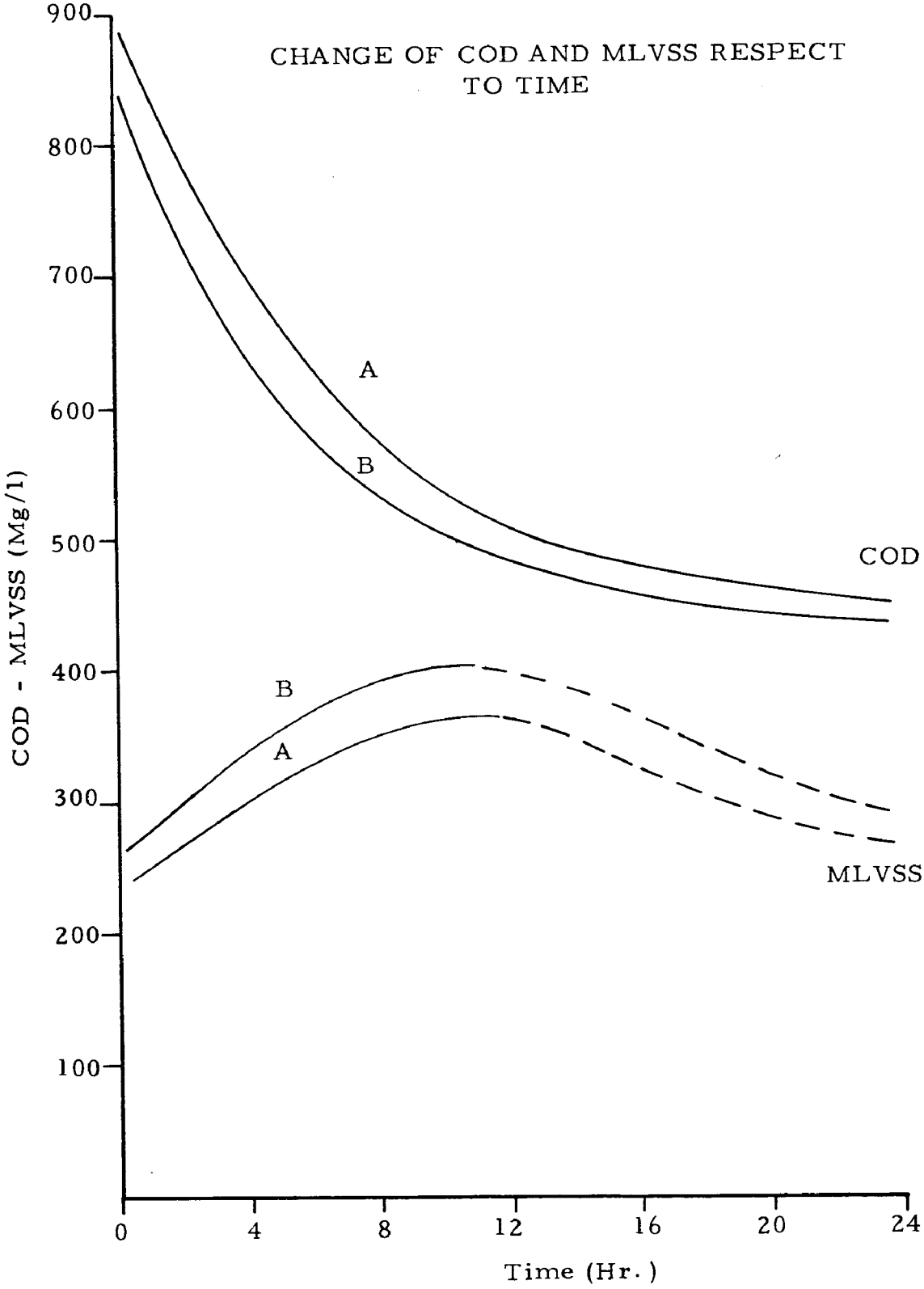

FIGURE 23

SPECIFIC GROWTH RATE VERSUS
ORGANIC CONCENTRATION

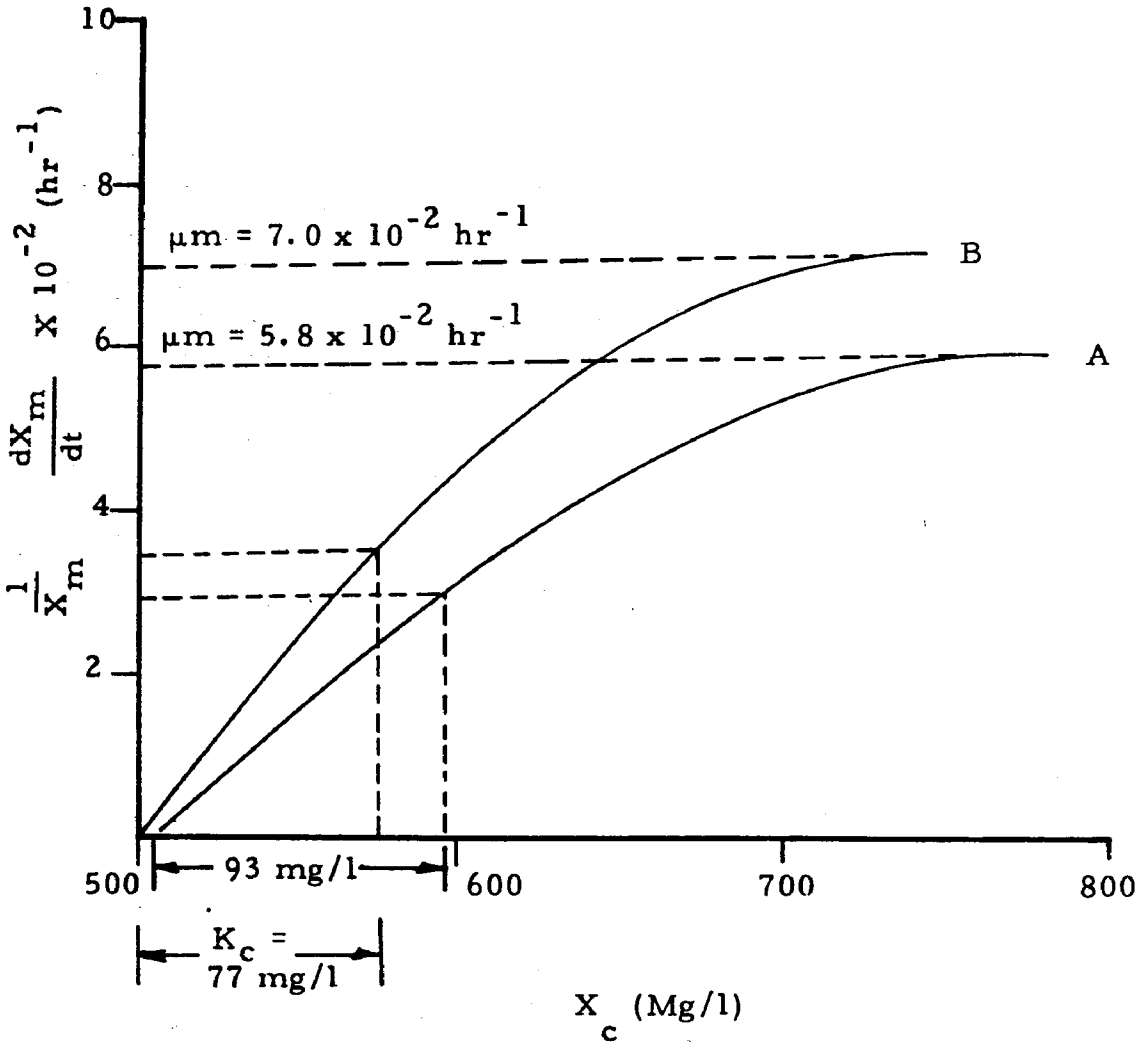

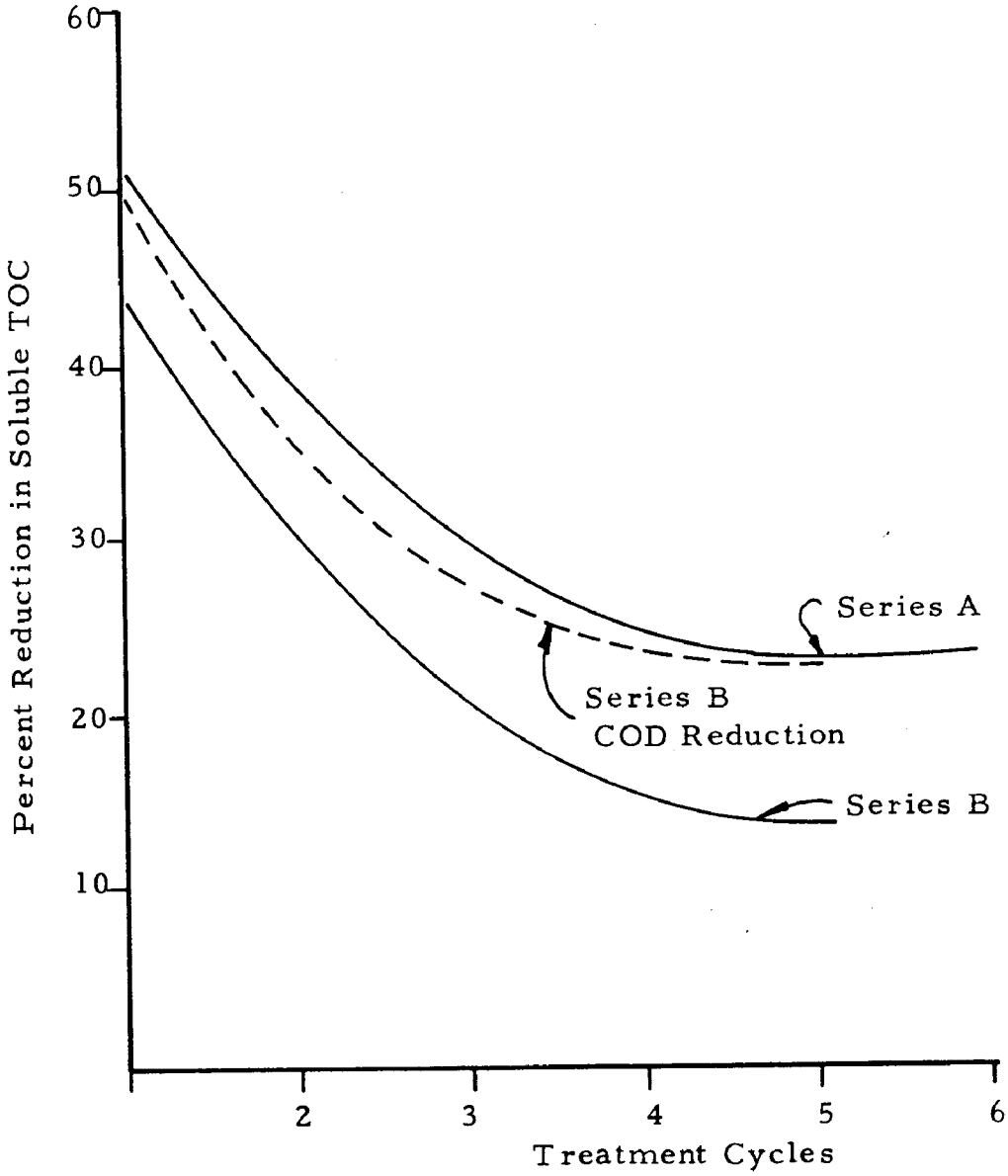

FIGURE 24

TREATMENT EFFICIENCY OF PILOT UNIT II
WITH ANAEROBIC REGENERATION

due to hysteresis; the regeneration did not completely recover the adsorption capacity even when extended regeneration periods were used. By the end of 16 days (6 treatment cycles totaling 102 hours and 5 regeneration cycles totaling 312 hours), the average soluble TOC removal dropped from 50% to 25%. It appeared that the efficiency finally reached equilibrium. The Series B study exhibited similar results. Lower efficiency of TOC reduction was shown mainly because of shorter regeneration time (4 regeneration cycles of totally 120 hours). COD reduction is also shown for Series B study for comparison.

In addition to soluble TOC and COD, changes of solids content and volatile acids were also monitored during the regeneration cycles. Hydrolysis of solids in the carbon column in both studies took place since the mixed liquor volatile suspended solid concentration gradually decreased in each regeneration cycle. There was little or no volatile acid accumulation in the system, indicating a sufficient buffering capacity of the system. Figure 25 demonstrates the change of total organic carbon and inorganic carbon in a typical regeneration cycle. It is interesting to note that the decrease of organic carbon always corresponds with the increase of inorganic carbon in the system. This is an indication of a complete anaerobic process where volatile acids as intermediate products were further broken down. The organic carbon was therefore converted to inorganic carbon in the form of carbonate or bicarbonate. The fact that there was no accumulation of volatile acids in the system further substantiates this point.

Figure 26 shows the effects of the anaerobic regeneration cycles. After reaching equilibrium, the anaerobic regeneration constantly brough back 40% of the original adsorption capacity.

Based on an inventory of the total COD material and total organic carbon in the influent and effluent, Pilot Unit II removed in the first treatment cycle approximately 10 pounds of total COD and 1.2 pounds of soluble TOC. The much larger amount of total COD removal compared to TOC removal was due to the fact that biological solids were filtered out partially and remained in the carbon bed. It was estimated from data that 1.27 pounds of biological solids were retained in the carbon bed after 24 hours of treatment. Part of the volatile solids was hydrolyzed in the regeneration cycle, but left more than 50% by weight of the solids in the carbon bed. Each of the subsequent treatment cycles had total COD and soluble TOC removals on the average of 5.5 and 1.2 pounds, respectively. This indicated a decrease in the efficiency of solids removal. It was observed that the influent soluble TOC concen-

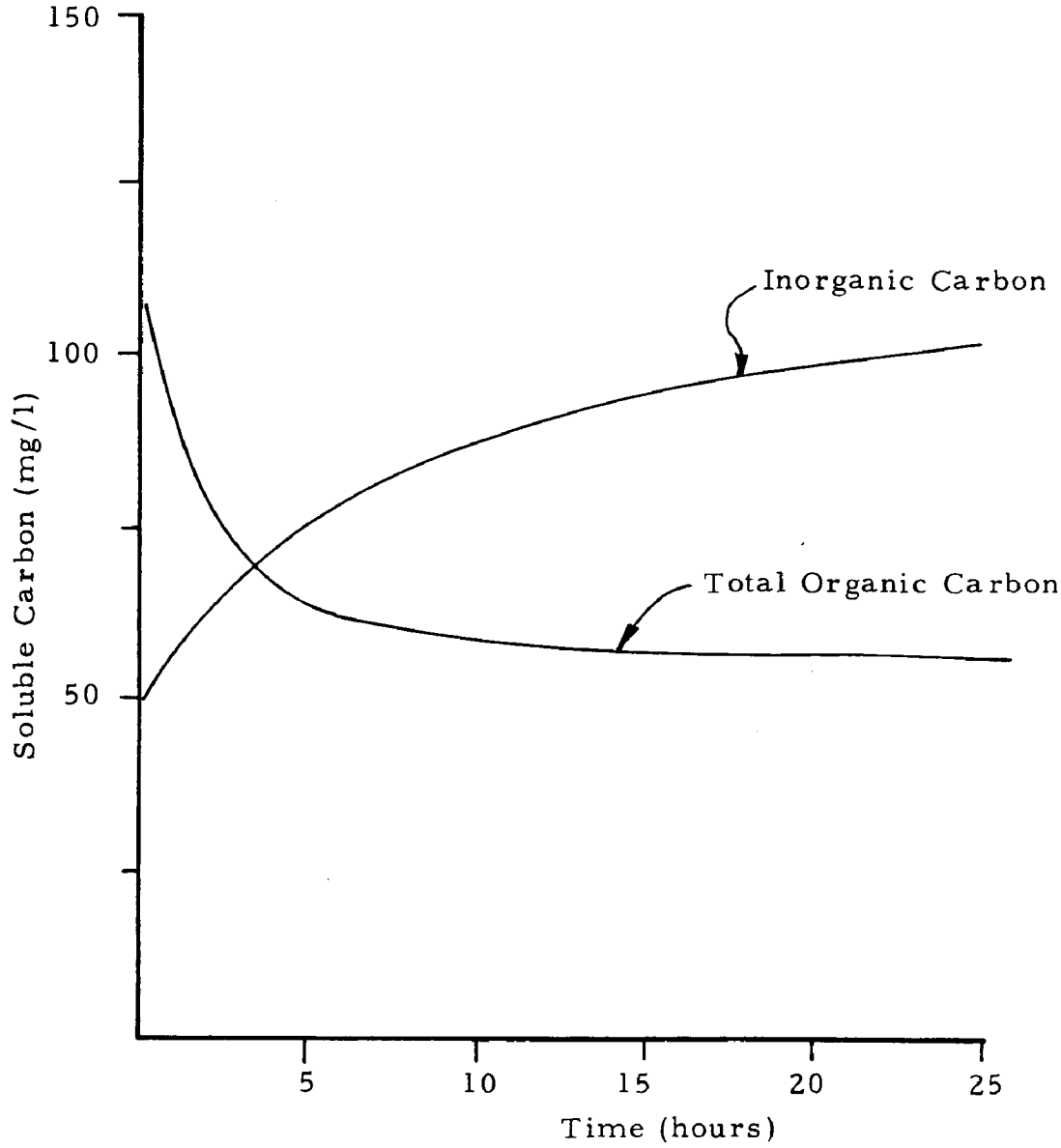

FIGURE 25

CHANGE OF ORGANIC AND INORGANIC CARBON RESPECT TO TIME IN A REGENERATION CYCLE

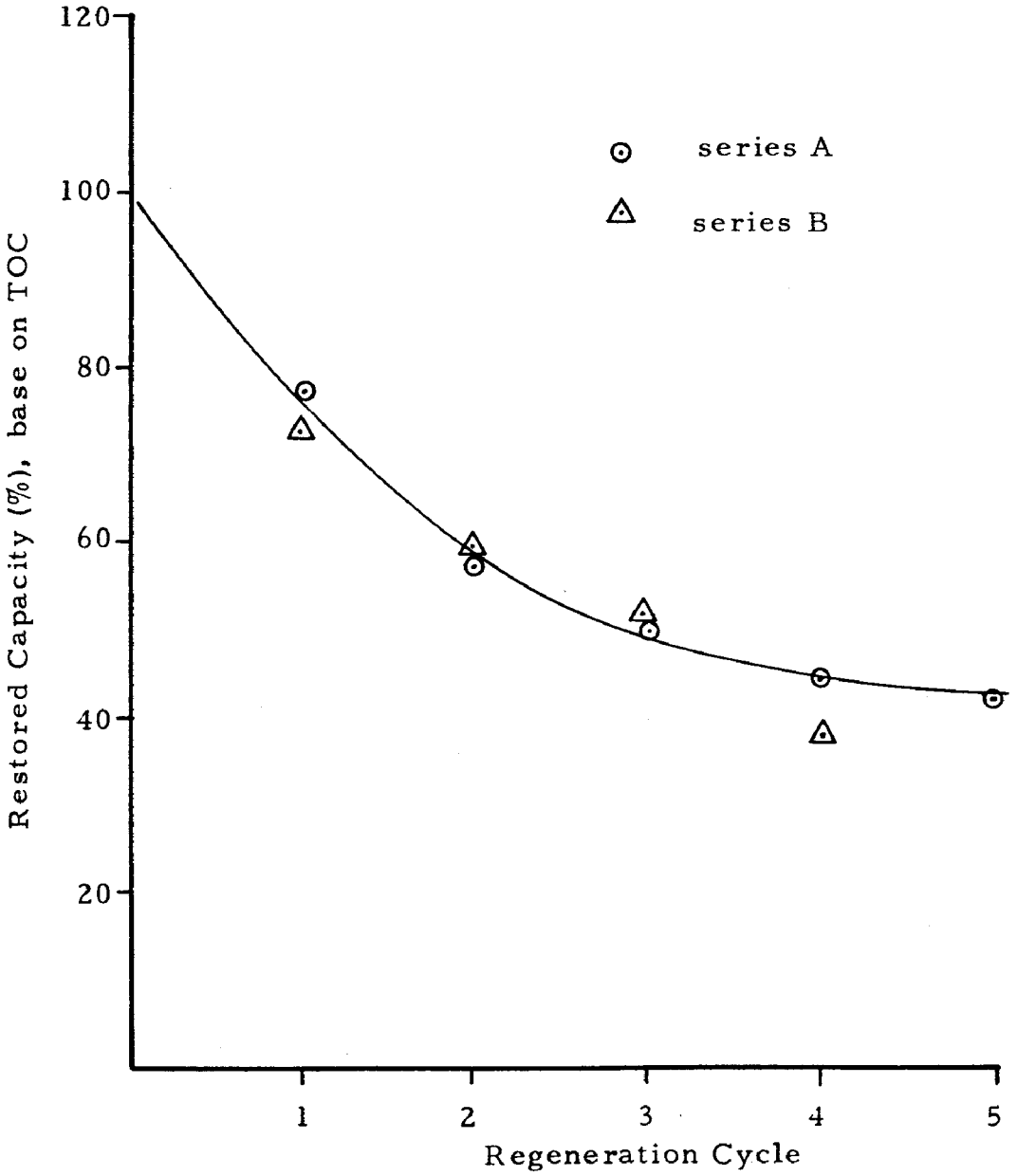

FIGURE 26

EFFECT OF ANAEROBIC REGENERATION

tration was increasing steadily in the course of the study. The net amount of soluble TOC removal, however, did not change much for all the treatment cycles although percentage removal was decreasing as shown in Figure 24.

Based on reports from literature, activated carbon can adsorb as much as 10% of its own weight of sewage organics. In the case of industrial waste and effluent from bio-oxidation processes, the adsorption capacity would be much less. The equilibrium isotherm study shown in Figure 16 indicated that using Nuchar WV-G carbon and Palisades waste at an effluent concentration between 200 to 600 mg/l soluble TOC, the adsorption achieved was approximately 12 to 15 mg/g of carbon. The result agrees with the present study which showed, in 24 hours of reaction time, a removal of approximately 1.2 pounds of soluble TOC per 1000 pounds of carbon in the system. Since the performance was repeated for many cycles, the regeneration process can be considered successful in restoring the carbon adsorption capacity. Fouling of the carbon bed by the accumulation of non-degradable solids could account partially for the gradual loss of adsorption capacity.

The following table shows the amount of TOC and total COD removal in each cycle of the second series of operation:

Cycle	1	2	3	4
TOC Removal (mg/g carbon)	12.4	11.3	12.3	10.0
Total COD Removal (mg/g carbon)	103	81	54	75

With an influent soluble TOC concentration between 200 to 600 mg/l, Pilot Unit II yielded an effluent TOC on the average of 240 mg/l. The equivalent effluent BOD and soluble COD concentrations would be approximately 140 mg/l and 470 mg/l. If Nuchar WV-G carbon is to be used in the full scale plant, an increase of carbon bed volume is necessary to assure a better treatment efficiency.

PILOT UNIT III - CARBON ADSORPTION AND AEROBIC REGENERATION

The removal of TOC in Pilot Unit III is presented in Figure 27. The average reduction in TOC decreased rapidly in the first few hours in each treatment cycle. This indicates the failure of the aerobic regen-

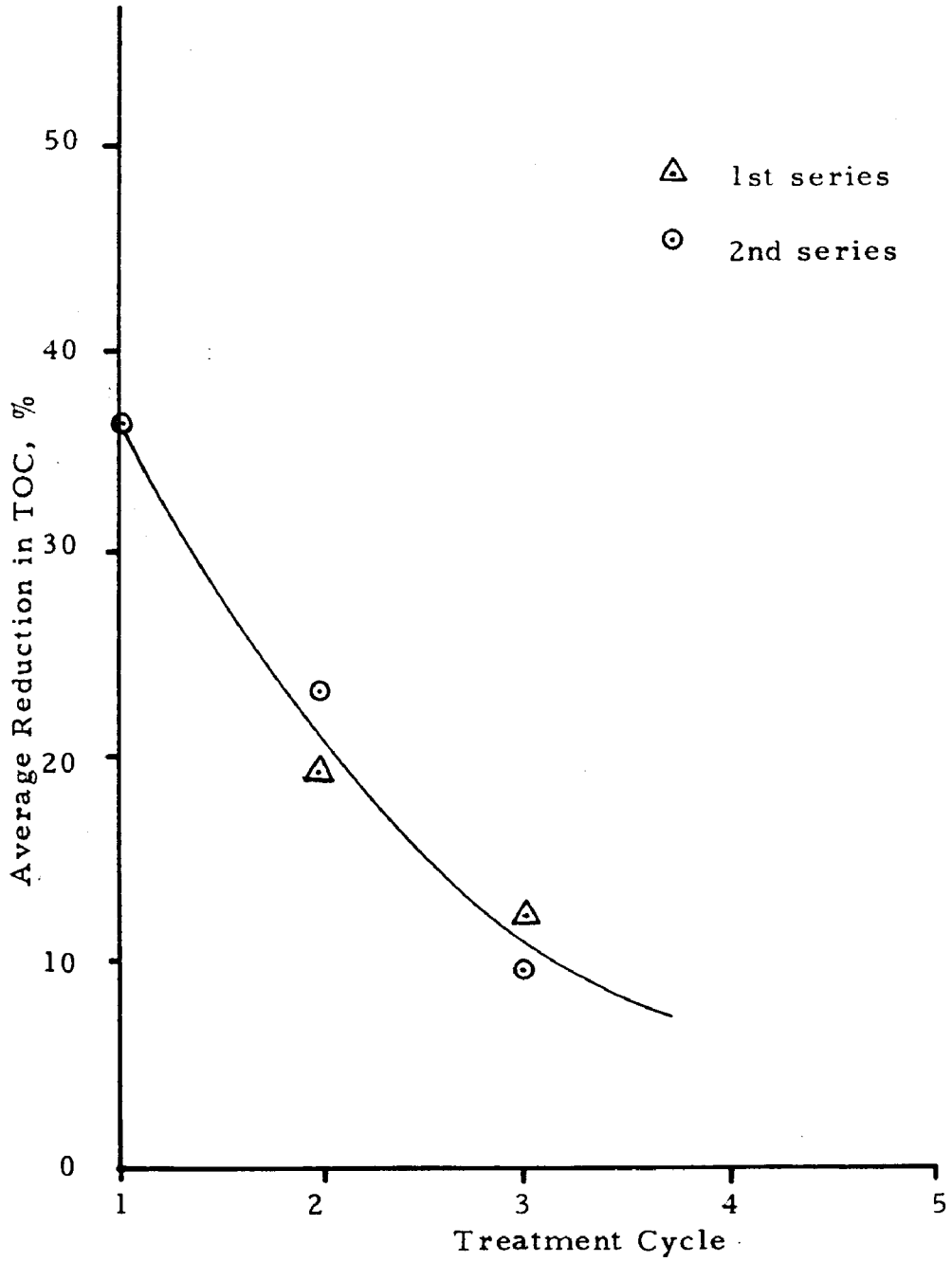

FIGURE 27

AEROBIC REGENERATION OPERATION

eration in restoring the adsorption capacity of the activated carbon bed, although there was a reduction in TOC of about 50% in each of the regeneration cycles. Naturally, when the carbon bed was saturated with material resistant to biological degradation, it was not expected that the same biological culture could regenerate the carbon by removing this biologically resistant material. Discussion of the operation of a modified pilot Unit III is presented in the section immediately following.

UNIT I, PILOT UNIT II AND PILOT UNIT III IN SERIES

Figure 28 presents the results of the month long test. It is obvious that Pilot Unit III could remove only a small fraction of the organic material from the Pilot Unit II effluent. Generally, a one-day regeneration time was too short for both pilot units and affected the following treatment cycles greatly. When a one-day treatment was followed by a two-day regeneration period, a steady state operation was achieved at 1.0 GPM per square foot of Pilot Unit II surface area. From Figure 28, the average total COD and soluble TOC reductions at steady state operation for Pilot Unit III were both 5%. In terms of the organic mass removal, Pilot Unit III removed in its treatment cycle 2.7 pounds of total COD or 0.8 pounds soluble TOC a day. Since the two columns in the unit contained a total of 22 pounds of carbon, the adsorption was equivalent to 0.036 pound TOC per pound of carbon. The amount of adsorption, being larger than that predicted by the equilibrium isotherm (Figure 16), was made possible with the additional treatment in the receiving tank in which aeration was provided. This removal was for a one-day treatment followed by a two-day regeneration cycle. If equal time periods were used for treatment and regeneration, Figure 28 indicates that only half of the amount of removal was noted.

The performance of Pilot Unit II in the same series of study can be examined. Figure 28 indicates 7.5 per cent reduction of total COD as well as soluble TOC in Pilot Unit II operated in series with Pilot Unit III. This was equivalent to 4.47 pounds total COD removal and 1.28 pounds soluble TOC removal per 100 pounds of carbon. This removal efficiency was identical to that found in the testing of Pilot Unit II described previously.

UNIT II CARBON ADSORPTION - ANAEROBIC REGENERATION

To assess the performance of Unit II in organic and solids removal, data presented in Table 6 of Appendix A were analyzed. With the cal-

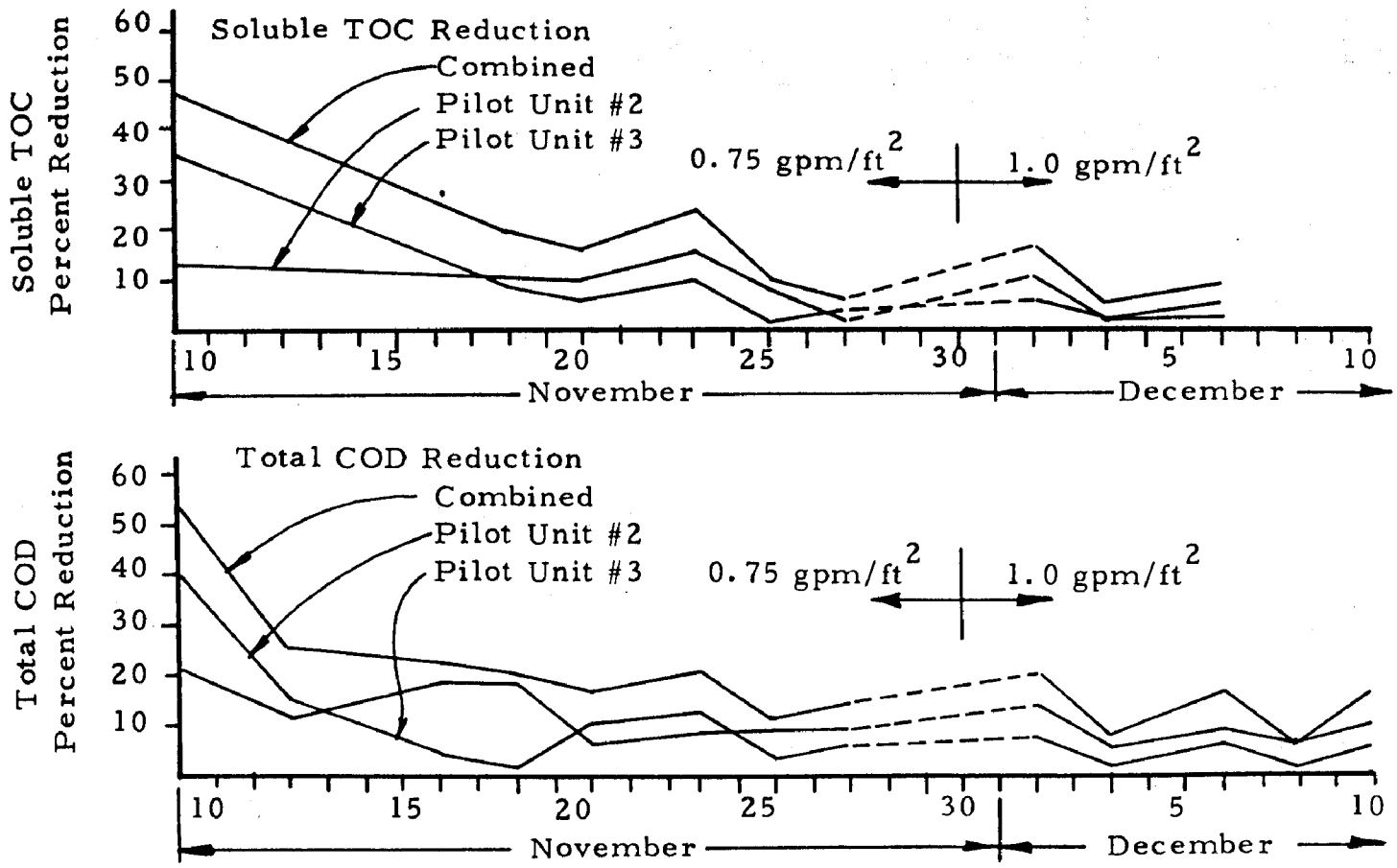

FIGURE 28

EFFICIENCY OF ORGANIC MATERIAL REMOVAL
PILOT UNITS II & III

culations of TOC, total COD, dissolved COD and MLVSS removals in pounds, percentages of TOC and MLVSS removal as well as pounds of TOC removal per day per 100 pounds of carbon, the condensed results are presented in Table 9. The percentages removal of MLVSS, TOC as well as the TOC removal per day per 100 pounds of carbon are plotted for each complete treatment - regeneration cycle as shown in Figure 29 These tables and figures greatly facilitate the discussion to be presented in the following:

When Unit II in full scale was first started, removal of TOC was very high because of the high adsorption capacity of the virgin carbon. It was found, however, that the removal efficiency rapidly decreased. This was demonstrated in Figure 29 which showed the poor performance of the Unit from the 3rd through the 7th treatment - regeneration cycles. During this period, an active, anaerobic culture was unable to establish itself which led to the resulting poor performance. The organic removal efficiency thereafter increased and reached a steady-state.

A periodic washout of the biological solids from Unit II was observed. When this happened, more solids left Unit II than were fed in from Unit I, particularly in the first part of a treatment cycle. This was usually the result of excessive accumulation of biological solids in Unit II in previous treatment cycles as could be seen from Figure 25. The Unit recovered rapidly, however, in subsequent treatment-regeneration cycles.

The accumulation of an excessive amount of volatile solids in Unit II would release later, upon hydrolysis in the regeneration cycle, a significant amount of dissolved organics such as organic acids, alcohols and aldehydes, etc. The organic removal by the Unit was therefore affected unless a longer regeneration was provided for more complete stabilization of the organic matter. The periodic occurrence of low efficiency TOC removal (usually came after a period of excessive solid accumulation) reflected this phenomenon. Neglecting both the starting period in which an active culture has not yet been established and the adjusting period in which washout of excessive accumulated solids occurs, the average removal efficiency was determined from Figure 29 for MLVSS, TOC, and TOC per day per unit weight of carbon. Also, the performance of the Unit in the last few treatment-regeneration cycles was not considered in determining the average values because a great deal of inert, fibrous material was found in the Palisades wastewater which reduced the treatment efficiency of both Unit I and Unit II. Figure 29 shows that Unit II removed, under

TABLE 9

PERFORMANCE OF UNIT II - FULL SCALE

Date	Gal/ Hour	gpm/ ft^2	TOC # Rem.	% TOC Rem.	TOC # Rem. / 100# C/day	Total # COD Rem.	Dissolved COD # Rem.	MLVSS# Rem.	MLVSS% Rem.
2-3-71	3637	1.21	81.7*	48.9	4.1	-	-	-	-
2-5-71	2373	0.79	15.1*	43.6	2.3	-	-	-	-
2-8-71	3908	1.30	16.18	14.2	0.81	-	-	-	-
2-10-71	4971	1.66	47.6	18.3	2.4	-	-	-	-
2-12-71	4620	1.54	23.3	12.2	1.2	-	-	-	-
2-15-71	4173	1.38	9.7	10.25	0.48	-	-	-	-
2-17-71	4964	1.65	12.3	13.1	0.62	66.7*	42.8*	45.7*	51.5
2-19-71	4123	1.37	46.0	30.0	2.3	245.2	135.9	15.2	42.5
2-22-71	3923	1.31	33.4	28.3	1.7	105.0	109.3	37.7	41.3
2-24-71	4466	1.49	-	-	-	-	45.7**	22.0	35.4

* Per 6 hours operation
** Per 4.5 hours operation

TABLE 9

PERFORMANCE OF UNIT II - FULL SCALE (cont.)

Date	Gal/ Hour	gpm/ ft^2	TOC # Rem.	% TOC Rem.	TOC # Rem. / 100# C/day	Total # COD Rem.	Dissolved COD # Rem.	MLVSS# Rem.	MLVSS% Rem.
2-26-71	3143	1.05	19.*	29.2	1.3	88.9*	64.7*	27.8	48.0
3-1-71	4643	1.55	31.0	24.9	1.55	108.1	105.3	12.6	34.2
3-3-71	4896	1.63	51.3	31.8	2.6	137	149.7	12.8	61.1
3-5-71	4736	1.58	35.6	23.0	1.8	-	-	10.5	21.2
3-9-71	3280	1.09	5.82	8.0	0.3	21.3	3.3	2.95	11.8
3-11-71	4390	1.46	34.4	25.6	1.7	107.1	90.9	8.5	39.3
3-15-71	4290	1.43	27.6	27.2	1.4	117.2	38.5	17.8	54.1
3-18-71 24-hr. trmt.	3650	1.215	-	-	-	30.6*	15.0*	4.8*	31.8
3-22-71	4187	1.395	27.1***	18.2	1.36	112***	86.4***	12.3***	39.5
	4446	1.485	29.3	26	1.47	93.3	89	0	0

* Per 4.5 hours operation
** Per 3 hours operation
*** Per 6 hours operation

TABLE 9
PERFORMANCE OF UNIT II - FULL SCALE (cont.)

Date	Gal/ Hour	gpm/ ft^2	TOC # Rem.	% TOC Rem.	TOC # Rem. 100# C/day	Total # COD Rem.	Dissolved COD # Rem.	MLVSS# Rem.	MLVSS% Rem.
3-24-71	5413	1.805	6.7*	9.7	0.67	46.*	43.3*	-	-
51 hr. trmt. Wgt. Avg.	4536	1.513	25.2**	19.6	1.27	100.5**	87.5**	-	-
3-26-71	2187	0.729	6.5**	14.6	0.33	79.1	24.9	36.6	57.4
3-29-71	3904	1.300	5.85	8.1	0.29	44.4	11.2	25	40.8
	3260	1.086	8.95	16.7	0.45	91	85.5	41.5	46.5
3-31-71	3582	1.193	7.40	12.4	0.37	67.7	48.4	33.3	43.7
51 hr. trmt.	4440	1.480							
4-2-71	2946	0.980	22.1	27.7	1.11	116.3	70.0	20.0	46.5
4-6-71	3570	1.19	33.8	28	1.69	-	137**	8.26**	24.8
4-7-71	4280	1.429	-	-	-	-	37*	21.3*	46.35
4-9-71	3215	1.071	-	-	-	-	19.3**	20.9**	47.55
4-12-71	3965	1.322	-	-	-	-	33.7	23.05	56.2

* Per 3 hours operation
** Per 6 hours operation

TABLE 9

PERFORMANCE OF UNIT II - FULL SCALE (cont.)

Date	Gal/ Hour	gpm/ ft^2	TOC # Rem.	% TOC Rem.	TOC # Rem. / 100# C/day	Total # COD Rem.	Dissolved COD # Rem.	MLVSS# Rem.	MLVSS% Rem.
4-13-71	4920	1.639	-	-	-	-	9.85*	6.95*	29.3
4-15-71	3925	1.309	12.42**	10.7	0.621	-	43.75**	30.65**	59.7
4-16-71	4550	1.515	1.42*	2.91	0.071	-	6.26*	4.1*	14.2
Wgt. Avg.	4130	1.38	9.23**	8.06	0.438	-	33.34**	23.17**	44.53
4-19-71	3820	1.273	13.85**	16.80	0.693	-	50.4**	16.8**	51.8
4-20-71	4270	1.423	-	20.4	-	-	46.4*	9.29*	28.6
4-22-71	3855	1.283	4.67	6.8	0.235	-	25.05**	22.35**	33.8
4-23-71	4690	1.563	-	-	-	-	11.73*	18.8*	33.5
4-26-71									61.4
4-27-71									20.4

* Per 3 hours operation
** Per 6 hours operation

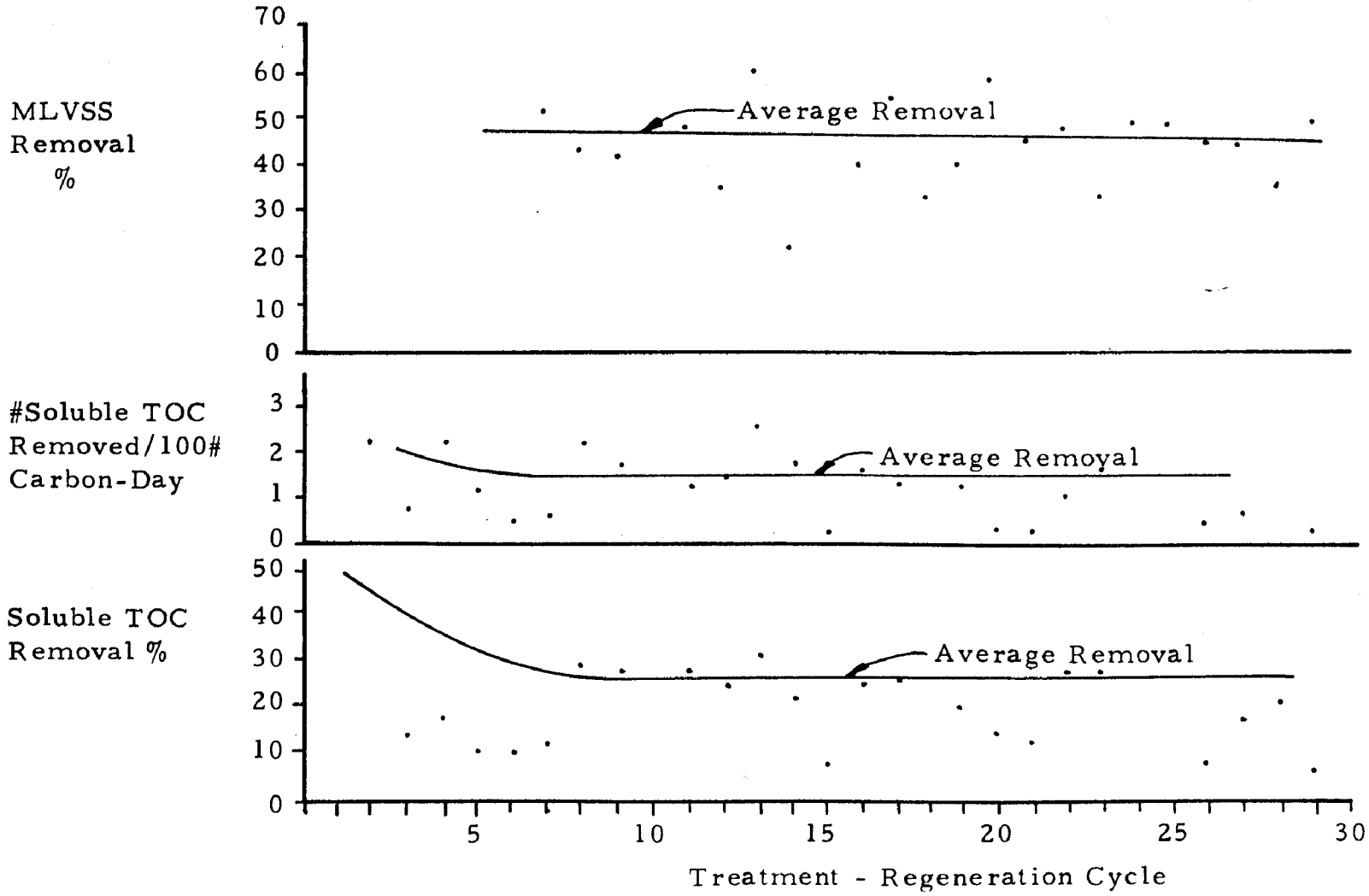

FIGURE 29

PERFORMANCE OF UNIT II TESTING IN FULL SCALE

normal operational condition, 25% soluble TOC in the treatment cycles. The average flow in this testing period was 1.3 gpm/ft^2, or 94,000 gpd. With an average flow of 75,000 gpd and a full 6 feet bed depth in Unit II, the projected removal could be 35%.

Figure 29 also shows that the adsorption capacity of Unit II was averaging 1.5 pounds TOC/100 pounds of carbon. The capacity was higher than that of the isotherm study. This was made possible because the anaerobic condition in Unit II has transformed the organic matter and made the adsorption capacity higher. The change of high molecular weight organics into small molecular weight compounds was most likely responsible. In addition, sulfur dyes could be removed by carbon more efficiently under anaerobic conditions.

In considering volatile suspended solids removal, Unit II removed, on the average in each treatment-regeneration cycle, 47.0% of MLVSS or 23.6 pounds of MLVSS/6 hour treatment cycle. A great saving in sludge treatment therefore can be realized.

In general, the removal of dissolved COD was parallel to the removal of soluble TOC in Unit II. Total COD removal was different because total COD included oxidizable solid fractions. The difference of total COD and dissolved COD should have a close relationship with the amount of MLVSS removal. In a period in which total COD was analyzed, the difference between total COD removal and dissolved COD removal was approximately 29.3 pounds per treatment cycle. The MLVSS removal on the average was 21.2 pounds in the same period. Using $C_5H_7NO_2$ as the average composition of MLVSS which is oxidizable, the amount of oxygen demand can be estimated as follows:

$$\underset{113}{C_5H_7NO_2} + \underset{160}{5\ O_2} = 5\ CO_2 + 2\ H_2O + NH_3$$

$$21.2 \times \frac{160}{113} = 30.0 \text{ lbs. as compared to } 29.3 \text{ lbs.}$$

It was demonstrated that total COD, dissolved COD and MLVSS can be closely related and that the data of one can be used to check against the others. Also, the oxygen demand of MLVSS can be easily estimated.

Since the function of Unit II was to remove dissolved organics as well as to filter some biological solids, the total performance of organic removal should be expressed in terms of total COD removal. While dissolved COD and MLVSS data were required in evaluating the treatment performance for Unit II separately, total COD removal could be estimated by converting MLVSS to oxygen demand and adding it to the dissolved COD removal.

FULL-SCALE TREATMENT PLANT OPERATION

The data in the start-up week from July 13 - 16, 1971 indicated a very high removal for all units and for both Leg A and Leg B. Table 10 summarized the treatment performance in dissolved COD removal in the start-up week. The high performance in Units II and III were therefore excluded in the analysis thereafter.

To facilitate the analysis, the treatment performance in terms of total COD and soluble TOC removal are summarized in Tables 11 and 12 for Leg A and Leg B respectively. The amounts of COD and TOC removal in pounds in each of the treatment cycles are calculated and included in Tables 6 and 7 of Appendix A. The organic concentrations of the raw wastewater as well as that of the effluents from each treatment unit are also presented. This is helpful in showing the effect of raw waste concentration in the effluent quality as well as the net amount of organic removals. The total flow in each treatment cycle is presented for the same reason.

To analyze the performance of the treatment system, each unit will be discussed separately. Unit I, its performance independent of the rest of the system, will be discussed first.

It is important to note that the flow recorded in Tables 11 and 12 was that which went through Units II and III only. The total flow for Unit I daily was much higher. In addition, the flow varied from day to day which should have considerable effect on the treatment efficiency. For many days the flow was between 126,000 gallons to 153,000 gallons per day. The retention time in the aeration tank was merely 4 to 5 hours which was very low for low biological solid aeration in the treatment of biologically resistant wastewater. For this reason, Unit I performance was not consistent. An attempt is made in the following to divide Unit I performance into three groups of good, medium and poor removals of oxygen demand.

TABLE 10

PERFORMANCE DATA DURING THE STARTUP WEEK

LEG A - VIRGIN CARBON

DATE	TOTAL FLOW	DISSOLVED COD MG/L		AVERAGE COD REMOVAL %		ACCUMULATED COD REMOVAL %
7/13/71	18020 Gal.	Raw Inf.	1150			
		Unit I Eff.	286	Unit I	72.7	72.7
		Unit II Eff.	41	Unit II	84.2	95.7
		Unit III Eff.	41	Unit III	10.8	96.2
7/14/71	----------REGENERATION----------					
7/15/71	30660 Gal.	Raw Inf.	1185			
		Unit I Eff.	844	Unit I	28.7	27.8
		Unit II Eff.	441	Unit II	44.9	60.2
		Unit III Eff.	211	Unit III	50.0	80.1

LEG B - SPENT CARBON

7/14/71	12680 Gal.	Raw Inf.	1172			
		Unit I Eff.	495	Unit I	57.2	57.2
		Unit II Eff.	344	Unit II	28.6	69.4
		Unit III Eff.	0	Unit III	100.0	100.0
7/15/71	----------REGENERATION----------					

TABLE 10

PERFORMANCE DATA DURING THE STARTUP WEEK (cont.)

LEG B- SPENT CARBON (cont.)

DATE	TOTAL FLOW	DISSOLVED COD MG/L		AVERAGE COD REMOVAL %		ACCUMULATED COD REMOVAL %
7/16/71	24930 Gal.	Raw Inf.	2490			
		Unit I Eff.	1373	Unit I	40.3	40.3
		Unit II Eff.	1200	Unit II	12.4	47.7
		Unit III Eff.	779	Unit III	35.5	66.3

TABLE 11

PERFORMANCE DATA

LEG A

(VIRGIN CARBON)

Date	Sample	TOTAL C. O. D. Avg. Removal %	Accum. Removal %	Amt. Removed lbs.	Conc. mg/l	SOLUBLE T. O. C. Avg. Removal %	Accum. Removal %	Amt. Removed lbs.	Conc. mg/l
	Raw Inf.				3100				
7-19-71	Unit I	47.9	47.9	--	1712				
MON.	Unit II	40.1	68.7	--	1019				
	Unit III	21.5	75.4	--	794				
REGENERATION									
	Raw Inf.				2500				
7-21-71	Unit I	25.8	25.8	--	1908				
WED.	Unit II	19.0	39.9	--	1587				
	Unit III	27.4	56.4	--	1268				
REGENERATION									
	Raw Inf.				1816				532
7-23-71	Unit I	23.7	23.7		1561	20	20		471
FRI.	Unit II	28.9	45.8	137	1120	25.6	40.5	37.6	350
37,340 gal	Unit III	28.7	61.4	105.5	778	18.4	51.4	20.3	285
REGENERATION									
	Raw Inf.				1129				373
7-27-71	Unit I	0	0		1168	0	0		376
TUE.	Unit II	27.9	27.9	155	843	32.9	32.9	59.1	252
57,310 gal	Unit III	21.8	47.2	107.5	617	16.8	44.1	20.	210
REGENERATION									
	Raw Inf.				1640				-
7-29-71	Unit I	30.8	30.8		1134				515
THUR.	Unit II	25.3	48.4	77.4	846	14.0	14.0	19.3	443
32,370 gal	Unit III	11.5	54.4	26.7	747	18.6	30.0	22.0	361
REGENERATION									
	Raw Inf.				1892				490
8-2-71	Unit I	45.3	45.3		1035	22.7	22.7		379
MON.	Unit II	53.6	74.7	198.5	480	40.3	53.8	54.9	226
43,080 gal	Unit III	54.8	88.6	94.4	217	28.7	62.0	21.5	161

TABLE 11 (cont.)

PERFORMANCE DATA
LEG A
(VIRGIN CARBON)

Date	Sample	TOTAL C. O. D. Avg. Removal %	Accum. Removal %	Amt. Removed lbs.	Conc. mg/l	SOLUBLE T. O. C. Avg. Removal %	Accum. Removal %	Amt. Removed lbs.	Conc. mg/l
	Raw Inf.				1430				613
8-24-71	Unit I	18.9	18.9		1159	48.2	48.2		317
TUE.	Unit II	34.2	53.0	520	670	20.7	68.8	134	191
127500 gal	Unit III	8.5	61.6	129	549	9.6	78.5	62.6	132
REGENERATION									
	Raw Inf.				1397				363
8-26-71	Unit I	13.8	13.8		1204	10.7	10.7		324
THUR.	Unit II	19.0	32.8	116	939	14.6	25.3	23.2	271
52500 gal	Unit III	10.7	43.5	65.6	789	28.1	53.4	44.5	169
REGENERATION									
	Raw Inf.				1465				373
8-30-71	Unit I	19.5	19.5		1180	29.8	29.8		262
MON.	Unit II	19.5	37.0	265	895	19.3	49.0	67	190
111750 gal	Unit III	29.3	68.2	399	466	14.7	63.8	51.1	135
REGENERATION									
	Raw Inf.				2173				558
9-1-71	Unit I	28.6	28.6		1551	29.7	29.7		392
WED.	Unit II	8.0	36.5	142.5	1378	5.9	35.6	27.2	359
99000 gal	Unit III	10.6	47.2	190.0	1148	7.7	43.4	35.5	316
REGENERATION									
	Raw Inf.				2315				653
9-7-71	Unit I	19.8	19.8		1857	32.6	32.6		440
TUE.	Unit II	11.7	31.5	156	1586	10.1	42.6	38	374
6900 gal	Unit III	8.6	40.0	114.5	1387	6.7	49.5	25.3	330
REGENERATION									
	Raw Inf.				2499				
9-9-71	Unit I	20.6	20.6		1983				
THUR.	Unit II	27.2	42.2	—	1441				
—	Unit III	6.7	46.2	—	1343				
REGENERATION									

TABLE 11 (cont.)

PERFORMANCE DATA
LEG A
(VIRGIN CARBON)

Date	Sample	TOTAL C. O. D. Avg. Removal %	Accum. Removal %	Amt. Removed lbs.	Conc. mg/l	SOLUBLE T. O. C. Avg. Removal %	Accum. Removal %	Amt. Removed lbs.	Conc. mg/l
	Raw Inf.				2213				578
9-14-71	Unit I	24.0	24.0		1681	21.6	21.6		453
TUE.	Unit II	24.2	42.2	116	1278	26.1	42.0	34.	335
34500 gal	Unit III	22.1	55.6	85.2	982	20.5	53.9	19.9	266
REGENERATION									
	Raw Inf.				1776				507
9-16-71	Unit I	10.3	10.3		1583	2.9	2.9		493
THUR.	Unit II	11.2	21.3	108.4	1395	17.0	19.1	47.8	410
69250 gal	Unit III	19.3	40.7	197	1053	19.1	34.7	45.5	331
REGENERATION									
	Raw Inf.								590
9-20-71	Unit I				851	50.5	50.5		292
MON.	Unit II	0	0	0	904	15.7	58.2	24.8	246
64500 gal	Unit III	18.8	18.8	115.0	691	4.0	59.9	5.4	236
REGENERATION									
	Raw Inf.				2512				838
9-22-71	Unit I	30.6	30.6		1786	41.7	41.7		488
WED.	Unit II	17.3	46.7	284	1341	25.0	56.2	78	366
76500 gal	Unit III	14.4	61.4	236	971	11.5	61.4	27.4	323
REGENERATION									
	Raw Inf.				3330				768
9-24-71	Unit I	37.6	37.6		2080	43.7	43.7		432
FRI.	Unit II	16.5	54.0	131	1530	20.9	55.5	21.4	342
28500 gal	Unit III	7.0	61.0	55.2	1298	27.7	67.8	22.6	247
REGENERATION									
	Raw Inf.				3120				
9-28-71	Unit I	10.9	10.9		2770				
TUE.	Unit II	23.9	32.1	426	2110				
75750 gal	Unit III	20.7	46.1	282	1673				
REGENERATION									
	Raw Inf.				3045				663
9-30-71	Unit I	36.0	36.0		1946	24.9	24.9		498
THUR.	Unit II	28.5	54.4	104.5	1390	18.5	38.8	17.3	406
22590 gal	Unit III	2.1	55.4	5.6	1360	16.8	49.0	12.8	338

TABLE 12

PERFORMANCE DATA
LEG B
(SPENT CARBON)

Date	Sample	TOTAL C. O. D. Avg. Removal %	Accum Removal %	Amt. Removed lbs.	Conc. mg/l	SOLUBLE T. O. C. Avg. Removal %	Accum. Removal %	Amt. Removed lbs.	Conc. mg/l
	Raw Inf.				1513				
7-20-71	Unit I	0	0		1589				
TUES.	Unit II	24.4	24.4	--	1189				
	Unit III	32.8	49.2		785				
REGENERATION									
	Raw Inf.				2513				
7-22-71	Unit I	39.6	39.6		1662				
THUR.	Unit II	25.9	55.2	--	1304				
	Unit III	17.2	62.9		1010				
REGENERATION									
	Raw Inf.				2182				
7-26-71	Unit I	38.4	38.4		1342				
MON.	Unit II	21.0	51.5	--	1058				
	Unit III	32.0	67.0		721				
REGENERATION									
	Raw Inf.				1740				477
7-28-71	Unit I	27.4	27.4		1261	20.1	20.1		381
WED.	Unit II	11.8	36.0	64.4	1114	15.8	32.7	26.3	321
52,530 gal	Unit III	23.1	50.7	112.6	857	25.6	50.0	36.3	238
REGENERATION									
	Raw Inf.				1289				356
7-30-71	Unit I	0	0		1361	0	0		368
FRI.	Unit II	12.6	12.6	20.3	1198	8.0	8.0	3.7	338
10,490 gal	Unit III	14.5	23.8	20.2	1036	20.0	26.4	8.3	271
REGENERATION									
	Raw Inf.				1734				518
8-3-71	Unit I	14.8	14.8		1477	20.9	20.9		410
THURS.	Unit II	0	14.8	0	1490	3.4	23.6	9.2	396
78,830 gal	Unit III	38.5	47.0	376	917	51.5	62.9	134.0	192
REGENERATION									
	Raw Inf.								367
8-5-71	Unit I					28.0	28.0		264
THURS	Unit II					17.0	40.3	12.0	219
31,860 gal	Unit III					32.7	59.9	19.1	147

TABLE 12 (cont.)

PERFORMANCE DATA
LEG B
(SPENT CARBON)

Date	Sample	TOTAL C. O. D. Avg. Removal %	Accum. Removal %	Amt. Removed lbs.	Conc. mg/l	SOLUBLE T. O. C. Avg. Removal %	Accum. Removal %	Amt. Removed lbs.	Conc. mg/l
	Raw Inf.				1497				407
8-25-71	Unit I	2.6	2.6		1458	0	0		407
WED.	Unit II	17.7	20.2	108.6	1194	28.3	28.3	47.5	292
49500 gal	Unit III	18.1	38.3	112	923	24.0	52.3	40.3	194
REGENERATION									
	Raw Inf.				1892				389
8-27-71	Unit I	37.0	37.0		1194	23.4	23.4		298
FRI.	Unit II	20.4	54.0	91.6	869	13.6	37.0	14.9	245
33750 gal	Unit III	14.0	68.1	74.7	604	20.6	57.6	22.5	165
REGENERATION									
	Raw Inf.				1447				250
8-31-71	Unit I	11.7	11.7		1278	0	0		272
TUE.	Unit II	9.7	21.4	68.8	1137	1.8	1.8	2.4	267
58,500 gal	Unit III	29.0	50.4	204	719	27.2	22.8	36	193
REGENERATION									
	Raw Inf.				1239				312
9-2-71	Unit I	16.5	16.5		1034	11.2	11.2		277
THUR.	Unit II	0	16.5	0	1181	0	11.2	0	301
42000 gal	Unit III	3.1	16.8	13.3	1143	32.1	34.6	33.9	204
REGENERATION									
	Raw Inf.				1667				633
9-8-71	Unit I	0	0		1831	31.2	31.2		435
WED.	Unit II	22.8	22.8	203	1414	21.5	46.2	45.8	341
58,500 gal	Unit III	29.6	52.3	264	873	37.0	66.0	61.4	215
REGENERATION									
	Raw Inf.				3140				1001
9-13-71	Unit I	47.9	47.9		1636	59	59		411
MON.	Unit II	23.6	60.2	266	1249	28.5	70.6	80.6	294
82500 gal	Unit III	16.2	66.7	139.6	1046	22.0	77.1	44.7	229
REGENERATION									

TABLE 12 (cont.)

PERFORMANCE DATA

LEG B

(SPENT CARBON)

Date	Sample	TOTAL C. O. D. Avg. Removal %	Accum. Removal %	Amt. Removed lbs.	Conc. mg/l	SOLUBLE T. O. C. Avg. Removal %	Accum. Removal %	Amt. Removed lbs.	Conc. mg/l
	Raw Inf.				2290				505
9-15-71	Unit I	5.2	5.2		2170	0	0		588
WED.	Unit II	24.8	28.7	34.3	1631	31.3	31.3	117	404
76500 gal	Unit III	22.5	44.7	234	1264	18.3	43.8	47.2	330
REGENERATION									
	Raw Inf.				2120				562
9-17-71	Unit I	2.7	2.7		2063	8.7	8.7		514
FRI.	Unit II	12.9	15.3	46.2	1790	9.7	17.3	8.3	465
20250 gal	Unit III	21.8	37.3	78.3	1326	11.8	27.1	9.3	410
REGENERATION									
	Raw Inf.				1685				505
9-21-71	Unit I	3.6	3.6		1624	1.2	1.2		498
TUE.	Unit II	21.1	24.6	220	1269	13.0	14.0	39.7	434
74250 gal	Unit III	23.8	48.5	247.5	869	15.5	27.3	42.1	366
REGENERATION									
	Raw Inf.				2350				
9-23-71	Unit I	19.2	19.2		1900				
THUR.	Unit II	5.8	25.0	82	1763				
72000 gal U	Unit III	30.5	55.4	430	1048				
REGENERATION									
	Raw Inf.				3230				
9-27-71	Unit I	12.4	12.4		2830				
MON.	Unit II	19.9	29.7	336	2270				
72000 gal	Unit III	14.2	39.7	194	1946				
REGENERATION									
	Raw Inf.				2700				695
9-29-71	Unit I	31.8	31.8		1840	16.6	16.6		580
WED.	Unit II	2.6	33.7	29.2	1790	6.8	22.3	23.4	540
70500 gal	Unit III	15.0	43.7	157.6	1520	13.8	33.0	43.8	465

Performance	Average Flow per day	Total COD Removal %	Soluble TOC Removal %	BOD Removal % if Data Available
Good	Low (60,000 g.)	42.0 (37-47.9)	40.0	44.6
Medium	Average (75,000 g.)	27.3 (23.7-30.8)	26.6	56.4
Poor	High (100,000 g.)	10.6 (0-20.6)	13.2	18.9

In general, higher flow through Unit I resulted in poorer performance with the exceptions in many cases where medium to good performance was found, although the flow was high. With very few exceptions, BOD removal was much higher than total COD and TOC removal. The fact that Unit I was a biological treatment process explains this phenomenon, easily. Because only a low biological solid concentration was maintained in Unit I, between 100-200 mg/l (high in the 400 mg/l and low 100 mg/l), a high BOD removal was not expected. High flows caused a washout of biological solids faster than they could be synthesized and therefore was more likely causing an inefficient bio-oxidation.

There were numerous reasons other than high flows that could lead to the poor performance of Unit I. Although change of environmental factors such as pH, temperature and D.O. was not likely in this study, use of unusual chemicals in finishing processes or dyeing could upset the biological treatment. The problems could be of toxicity or lack of a sufficient acclimation period. Both are critical for a dispersed growth biological reactor without biological solid return. Reviewing the operation schedules of Palisades Industries in July, August and September revealed that the poor performance of Unit I occurred concurrently with the process of large amounts of white goods. Heavy bleaching using peroxide resulted in discharging peroxide in the wastewater. The toxic effects of the peroxide were experienced immediately in Unit I. In many occasions, prolonged effects were observed particularly in a high flow period. When both a toxic condition and washout of biological solids occurred simultaneously, it was most detrimental to the biological reactor and a prolonged period was required for the recovery of a normal performance.

The performance data have demonstrated clearly the Unit I capability and its limits as a dispersed growth biological reactor. Under a normal (75,000 gpd) to low flow condition, Unit I was able to remove approxi-

mately 50% of BOD of the Palisades wastewater. The efficiency of removal was limited by the biological solid concentration of the mixed liquor. In addition, a low biological solid system was more sensitive to toxic loadings and change of hydraulic flow. A loss of solids from the system imposed a great hardship on Unit I which required a prolonged period to build up the acclimated, active biological solids before a normal operation could be restored. A major improvement can be visualized by returning solids to Unit I. This could be accomplished by renovating the clearwell and adding sludge pumps and pipelines. A solid concentration between 1500 to 2000 mg/l should be the target. A very high sludge return flow is not realistic because it increases the hydraulic flow above which Unit I cannot effectively handle. High sludge return to Unit I would also allow more endogenous solid reduction and reduce the solid loading to Unit II. Consequently, the sludge return practice should improve the performance of both Unit I and Unit II.

The Unit II performance in this testing period was divided into three groups similar to Unit I performance analysis as shown in Table 13.

Several factors accounted for the performance of Unit II. First of all, the hydraulic flow was much too high for the carbon columns. It was described previously that both Units II and III were fed by 150 gpm pumps. There were approximately 300 cubic feet of carbon in each leg of Unit II. Using a 50% expansion and a 45% void ratio of packed carbon, the retention time of the wastewater in Unit II at a flow rate of 150 gpm was

$$t = \frac{300 \text{ cu.ft.} \times 1.5 \times 0.45 \times 7.5 \text{ gal/cu. ft.}}{150 \text{ gpm}} = 10 \text{ min.}$$

This retention time was too short for effective adsorption. In addition, solid removal in Unit II was reduced at high flow which in effect reduced the total COD removal.

More significantly, a surge (high flow) would slough off the established anaerobic culture on the carbon particles which were mainly responsible for carrying out the hydrolysis process and a successful regeneration of Unit II. Furthermore, a high flow introduced more residual dissolved oxygen into the Unit. As a result, a true anaerobic condition was not maintained as was observed in many instances.

The 150 gpm flow was three times the average wastewater flow of 75,000 gpd from the Palisades Industries. It would seem desirable to use pumps of various capacities so that when the flow was low (as in

TABLE 13

UNIT II PERFORMANCE ANALYSIS

Performance	Average Flow		Total COD Removal %		Soluble TOC Removal %		Solids Removal		Length of Regeneration/ Treatment	
	Leg A	Leg B	Leg A	Leg B	Leg A	Leg B	Leg A	Leg B	Leg A	Leg B
Good	Low	Low	30.7	22.7	26.0	21.2	Fair	Fair	2.6	2.6
	Med.	Med.								
Medium	Med.	Med.	16.3	15.0	17.8	15.5	Fair	Fair	1.7	1.2
							Poor	Poor		
Poor	High	High	below 10.0	below 10.0	below 10.0	below 10.0	Poor	Poor	1.0	1.0

most of the time during the day) a much longer retention time would be provided in Unit II.

The length of a regeneration peiod was critical to the Unit II performance. A long regeneration period assured a good recovery of the carbon adsorption capacity. The previous table demonstrates clearly that the length of a regeneration period should be on the average 2.6 times that of a treatment period in order to bring about a 21% to 31% total COD removal under the described testing condition. When only a short regeneration time could be provided as was tested purposely in many instances, little hydrolysis of the retained solids took place. Consequently, when a treatment cycle was resumed, solids accumulated in Unit II and were washed out due to the rising pressure. A poor performance, particularly in terms of total COD or solid removal, was therefore inevitable.

The performance of Unit II depended somewhat on the performance of Unit I when the influent organic was strong. A good removal of solid or dissolved form of organic would relieve Unit II from overloading, and therefore assured a better Unit II performance. When the influent organic concentration was low, however, the performances of the two Units were not related.

Leg A of Unit II outperformed Leg B consistently in the test period. The outcome was expected because Leg A contained virgin carbon to start while Leg B contained spent, although washed, carbon. Adding up all the total COD removed by Leg A Unit II throughout the test period (from Table 7) yields a total of 2937.3 pounds of total COD. This is equivalent to 2.3 # total COD removal/cycle/100# carbon. Taking an average of 1.8 regeneration days for each treatment day in this period, the capacity of Unit II was approximately $\frac{2}{2.8} \times 2.3 = 1.6$ # total COD removal/day/100# carbon. This was a very high removal although it appeared that the percentage of removal was low for Unit II. The high organic concentration in the Unit I effluent was primarily responsible for this. Apparently Unit II was able to remove organic matter up to the adsorption capacity of the carbon and regenerated it successfully. Unfortunately, a large amount of organic matter was still left in Unit II effluent which required further treatment.

Unit II performance based on Leg B was less effective. A total of 1879.1 # total COD were removed in the test period. This was equivalent to 1.0 # removal/day/100# carbon. Since the carbon in Leg B had been used for several months prior to this testing period, the removal was still impressive.

The performance of Unit III was analyzed much the same way as for Unit II. The average total COD removal under low to medium flow rate and longer regeneration period conditions was 28.4%, and the respective TOC removal was 23.7%. The average length of regeneration period was 2.4 days to one day of treatment. A good performance by Unit II was also helpful in bringing a better organic removal in Unit III. When the flow was higher and the regeneration was shorter (1.6 days to one day of treatment), the total COD and TOC removals were, respectively, 15.0% and 18.3%.

The retention time of wastewater flow in Unit 3 in a treatment cycle with a 150 gpm flow was approximately 7.0 minutes. Again, it would seem necessary to provide various pumping rates so that a low flow will give longer detention time.

The total COD removal in the entire testing period was 4858 pounds. With 12000 pounds of carbon in the four columns and an average of 2.0 days regeneration for a one-day treatment, the equivalent removal was 0.9# total COD/day/100# carbon. Unit III was inadequately aerated in the regeneration period; consequently, it was felt that its full capacity had not been used.

Limited data on BOD removal for both Units II and III show the average BOD removal for Unit II was 24% while that for Unit III was 18%. The variation of BOD removal was much wider than TOC or total COD removal. It was observed that whenever Unit I was performing poorly in BOD removal, Unit II was highly efficient. However, when Unit I was efficient, Unit II could not remove much of the remaining BOD. This was particularly true when hydrolysis converted some large molecular organic matter normally non-biodegradable to small molecular ones which are mostly biodegradable. The released BOD through this mechanism sometimes could be more than the original BOD coming into Unit II. The same phenomenon was observed in BOD removal by Unit III which depended somewhat on Unit II BOD removal.

The BOD removal for the entire system was on the average 63.2%. This was higher than the TOC removal and comparable to total COD removal. The BOD removal efficiency was not a good measure for this system, however, because of the internal changes or release of BOD from organic matter which was not available in the form of BOD coming into the treatment system. Therefore, for a better evaluation of the total treatment including solid and dissolved organics removal, total COD removal was more appropriate.

Despite the difference of Unit II and Unit III in their mechanism of treatment and regeneration processes, both Units suffered from many identical difficulties; namely, short retention time in treatment cycles, insufficient length of regeneration period and inadequate maintenance of an anaerobic or aerobic condition. While some of these problems can be corrected without much difficulty such as change of feed pumps and improvement of the aeration system in Unit III, the main problem lies in the fact that both Units II and III were significantly underdesigned. From the material balance analysis of the data collected, both Units were capable of removing the organics up to the limits of the carbon adsorption capacity and then regenerated repeatedly for continuous operation. The combined removal of total COD in Units II and III in this full-scale testing period was 9,674 pounds, with an average of 312 pounds per treatment-regeneration cycle. Still, significant amounts of organic matter left the treatment system because of the high influent organic concentration. It is unrealistic to expand the sizes of Units II and III manyfold to improve the effluent quality to an acceptable level. The bulk of the organics should be removed by Unit I. Tables 1 and 2 (Section II) summarize the performance of the existing treatment system and a system which would meet the projected treatment efficiency.

SUMMARY

The Palisades wastewater is a strong organic waste containing organic dyes, most of which are resistant to biological treatment. Removal of the organics from the wastewater by carbon adsorption is limited by the adsorption capacity as well as the rate of regeneration. This project demonstrates the feasibility of a treatment system using biological oxidation plus adsorption-anaerobic regeneration and adsorption-aerobic regeneration. The capacity of the system, however, must be expanded in order to handle the treatment effectively. However, the unit has a high potential in dye waste treatment and is worth further study.

SECTION VIII

ACKNOWLEDGEMENTS

The concept for the design and construction of the Palisades pilot plant was developed by Edward L. Shunney, Clarke A. Rodman, and Philip P. Virgadamo of Fram Corporation. The biological regeneration process is the development of Dr. Stephen S. Blecharczyk and is the subject of a pending patent assigned to Fram Corporation.

Supervision and management of the pilot plant operation was conducted by Dr. Calvin P. C. Poon of University of Rhode Island. His guidance and advice leading to the successful completion of this project is gratefully appreciated.

The cooperation of Mr. Anthony Guarriello, President, Palisades Industries, Inc. and his staff is gratefully acknowledged. Construction and installation was accomplished by Walter Bigos and Robert Moseley of Fram Corporation with the help of the maintenance staff of Palisades Industries.

Sampling and analysis conducted throughout the test period were performed by Richard Harris and Frederick Keenan of Fram Corporation along with the aid of the Environmental Engineering Department at the University of Rhode Island. The type of activated carbon used in the pilot plant was selected on the basis of carbon evaluation studies conducted by Anthony E. Perrotti of Fram Corporation.

The organization, preparation and writing of this report was the work of Dr. Calvin P. C. Poon of the University of Rhode Island, Mr. Philip P. Virgadamo and Miss Susan M. Anderson, both of Fram Corporation. The efforts of Miss Doris Peck for typing of the manuscript are also gratefully acknowledged.

SECTION IX

REFERENCES

1. Fram Corporation. "Bio-regenerated Activated Carbon Treatment of Textile Dye Wastewater", Environmental Protection Agency, Water Quality Office, Grant Project No. 12090 DWM., January 1971.

2. Molvar, A. E., Rodman, C. A., and Shunney, E. L.; "Treating Textile Wastes with Activated Carbon", Textile Chemists and Colorists, August 12, 1970, Vol. 2, No. 16, p. 36.

3. "Removal of Color from Textile Dye Wastes", Textile Chemists and Colorists, November 1971, Vol. 3, No. 11, pp. 239/45 to 247/53.

4. Eckenfelder, W. W., Jr. :Water Quality Engineering for Practicising Engineers", Barnes and Noble, Inc., New York, New York, 1970.

5. Shunney, E. L., Perrotti, A. E., Rodman, C. A., "Decolorization of Carpet Yarn Wastewater", American Dyestuff Reporter, Vol. 60, 1971, No. 6, p. 32.

6. Heukelian, H., "Aeration of Soluble Organic Wastes with Non Flocculent Growths", Industrial and Engineering Chemistry, Vol. 41, 1949, p. 1413.

7. Hopkins, C. B., Weber, W. J., Jr., and Bloom, R. Jr., "A Comparison of Expanded Bed and Packed Bed Adsorption Systems", Report No. TWRC-2, Robert A. Taft Water Research Center, FWPCA, USDI, Cincinnati, Ohio, December 1968.

8. Cookson, J. T., Jr. "Chemical Characteristics of Activated Carbon in Water", Proceedings of the Annual North Eastern Regional Anti-Pollution Conference, 1969, University of Rhode Island, Kingston, R. I.

9. Cookson, John T., and Ishizaki C., "Adsorption of Sulfur Containing Taste and Odor Compounds on Activated Carbon" paper presented in 44th Annual Conference, Water Pollution Control Federation, October 1971, San Francisco, California.

10. Herbert, D., Elsworth, R. and Telling, R. C., "The Continuous Culture of Bacteria: A Theoretical and Experimental Study", Journal Gen. Mirobiol. 14, 601-622, 1956.

11. Knowles, C. L., Jr., Chemical Engineering, 77, No. 9, pp. 103-109 (1970).

12. Kugelman, I.S., Paper Presentation "Treatment of Wastewater by Moving Bed Filtration", 23rd Industrial Waste Conference, Purdue University, Lafayette, Indiana (May 1968).

13. Hassler, J. W., Activated Carbon, Chemical Publishing Company, New York, 1963.

14. Johnson, R. L. et al, "Evaluation of the Use of Activated Carbons and Chemical Regenerants in Treatment of Wastewater", AWTR-11
U. S. Public Health Service Publication No. 999-WP-13, May 1964.

15. Chemical Engineers' Handbook, J. H. Perry, Editor, Fourth Edition, McGraw-Hill Book Company, Inc. (Section 16).

SECTION X

APPENDIX

APPENDIX A

Table 1-A (cont.)

Start-up of Unit 1 (March 23 - May 15, 1970)
Changes in Organic Concentrations

Date	5/11	5/12	5/13	5/14	5/15	5/16	5/17
Soluble TOC - in (mg/l)	140	344	296	335	325		
Soluble TOC - out (mg/l)	42	82	92	98	116		
% Reduction Soluble TOC	70.0	76.2	69.0	70.8	64.3		
Total COD - in (mg/l)		965	967				
Total COD - out (mg/l)		285	358				
% Reduction Total COD		20.5	52.6				
Soluble COD - in (mg/l)		871	808				
Soluble COD - out (mg/l)		176	213				
% Reduction Soluble COD		79.8	73.6				
% Soluble COD - in		90.3	83.5				
% Soluble COD - out		61.7	59.5				
Total BOD - in (mg/l)		226	255				
Total BOD - out (mg/l)		40	56				
% Reduction Total BOD		82.3	78.0				
Soluble TOD - in (mg/l)		804	763				
Soluble TOD - out (mg/l)		166	200				
% Reduction Soluble TOD		79.5	73.7				
Gallons Treated	5000	5000	5000	5000	5000	0	0

Table 1-A

Start-Up of Unit 1 (March 23 - May 15, 1970)
Changes in Organic Concentrations

Date	3/23	3/24	3/25	3/26	3/27	3/28	3/29	3/30	3/31	4/1	4/2	4/3	4/4	4/5
Soluble TOC - in (mg/l)	165	285		320	250			257	261	270	208	288		
Soluble TOC - out (mg/l)	70	80		75	85			95	120	140	140	150		
% Reduction Soluble TOC	57.5	72.0		76.7	66.0			63.0	54.0	48.2	32.8	48.0		
Total COD - in (mg/l)			826							774	634			
Total COD - out (mg/l)			82.1							705	653			
% Reduction Total COD			0.6							9.1	-3.1			
Soluble COD - in (mg/l)			707							648	558			
Soluble COD - out (mg/l)			198							310	331			
% Reduction Soluble COD			72.0							52.2	40.6			
% Soluble COD - in			86.1							84.0	87.8			
% Soluble COD - out			24.1							44.0	50.7			
Total BOD - in (mg/l)			299											
Total BOD - out (mg/l)			233											
% Reduction Total BOD			22.0											
Soluble TOD - in (mg/l)			896											
Soluble TOD - out (mg/l)			270											
% Reduction Soluble TOD			70.0											
Gallons Treated	6500	3750	4800	1200	3000	2000	2000	4600	4000	6000	8700	8940	2000	2000

Table 1-A (cont.)

Start-Up of Unit 1 (March 23 - May 15, 1970)
Changes in Organic Concentrations

Date	4/6	4/7	4/8	4/9	4/10	4/11	4/12	4/13	4/14	4/15	4/16	4/17
Soluble TOC - in (mg/l)	145	281	205	226	194			414	563	-	478	575
Soluble TOC - out (mg/l)	118	108	117	126	134			145	248	210	208	230
% Reduction Soluble TOC	18.6	61.5	43.0	44.3	31.0			64.9	55.9	-	56.5	60.0
Total COD - in (mg/l)	456			635					1450	-	1304	
Total COD - out (mg/l)	438			453					894	820	755	
% Reduction Total COD	3.9			28.7					38.4	-	42.0	
Soluble COD - in (mg/l)	395			566					1335	-	1185	
Soluble COD - out (mg/l)	275			330					683	550	545	
% Reduction Soluble COD	30.6			41.7					48.8		54.0	
% Soluble COD - in	86.5			89.3					92.0	-	91.0	
% Soluble COD - out	62.5			73.0					76.0	67.0	72.2	
Total BOD - in (mg/l)				161					483		360	
Total BOD - out (mg/l)				48					208		70	
% Reduction Total BOD				70.2					57.0		80.5	
Soluble TOD - in (mg/l)												
Soluble TOD - out (mg/l)												
% Reduction Soluble TOD												
Gallons Treated	8635	8660	9317	9200	12450	0	0	16800	7750	0	4500	3000

Table 1-A (cont.)

Start-up of Unit 1 (March 23 - May 15, 1970)
Changes in Organic Concentrations

Date	4/18	4/19	4/20	4/21	4/22	4/23	4/24	4/25	4/26	4/27	4/28	4/29	4/30
Soluble TOC - in (mg/l)				405	375	344	330			253	293	366	395
Soluble TOC - out (mg/l)				200	185	178	184			133	133	135	145
% Reduction Soluble TOC				50.6	50.7	48.3	44.3			47.5	54.6	63.2	63.3
Total COD - in (mg/l)				1256	1081						965	1132	
Total COD - out (mg/l)				1231	1126						589	627	
% Reduction Total COD				2.0							38.9	44.6	
Soluble COD - in (mg/l)				1070	940						849	1001	
Soluble COD - out (mg/l)				489	485						354	412	
% Reduction Soluble COD			RE-SEEDING	54.3	37.8						58.3	58.9	
% Soluble COD - in				85.2	87.0						87.8	88.5	
% Soluble COD - out				39.8	51.6						60.2	65.7	
Total BOD - in (mg/l)				390	338						180	265	
Total BOD - out (mg/l)				260	168						57	66	
% Reduction Total BOD				33.3	50.3						68.3	75.3	
Soluble TOD - in (mg/l)											963	960	
Soluble TOD - out (mg/l)											478	427	
% Reduction Soluble TOD											50.3	55.5	
Gallons Treated	2000	2000		3000	4125	3600	3075	2000	2000	4725	3000	3000	4500

Table 1-A (cont.)

Start-up of Unit 1 (March 23 - May 15, 1970)
Changes in Organic Concentrations

Date	5/1	5/2	5/3	5/4	5/5	5/6	5/7	5/8	5/9	5/10
Soluble TOC - in (mg/l)	273			493	500	491	435	450		
Soluble TOC - out (mg/l)	134			143	122	136	137	145		
% Reduction Soluble TOC	51.0			71.0	75.6	72.3	68.6	67.7		
Total COD - in (mg/l)					1477	1448				
Total COD - out (mg/l)					580	596				
% Reduction Total COD					60.7	58.9				
Soluble COD - in (mg/l)					1284	1313				
Soluble COD - out (mg/l)					344	359				
% Reduction Total COD					73.1	72.6				
% Soluble COD - in					87.1	90.8				
% Soluble COD - out					59.2	60.2				
Total BOD - in (mg/l)					570	540				
Total BOD - out (mg/l)					62	67				
% Reduction Total BOD					89.0	89.5				
Soluble TOD - in (mg/l)					1233	1187				
Soluble TOD - out (mg/l)					375	350				
% Reduction Soluble TOD					69.4	70.5				
Gallons Treated	2250	2000	2000	3000	3000	3000	3000	3000		

Table 1-B

Start-up of Unit 1 (March 23 - May 15, 1970)
Chemical and Physical Data

Date	3/23 thru 3/31	4/1	4/2	4/3	4/4	4/5	4/6	4/7	4/8	4/9	4/10	4/11
pH - in	NO DATA COLLECTED											
pH - reactor												
Temperature - in (^{o} C.)							13-16	13-16				
Temperature - reactor (^{o} C.)		14-15										
NH_3 - nitrogen (mg/l)		0	0						0	0		
Org. Nitrogen (mg/l)		13.4	18.5						2.2	2.5		
Ortho-Phosphate (mg/l)		23	19						11.3	9.5		
Poly-Phosphate (mg/l)		7	0						4.8	2.3		
MLSS (mg/l)		336	238						191	126		
MLVSS (mg/l)		-	190						177	102		
Sludge Volume Index		300	357						Very High	Very High		

Table 1-B (cont.)

Start-up of Unit 1 (March 23 - May 15, 1970)
Chemical and Physical Data

Date	4/12	4/13	4/14	4/15	4/16	4/17	4/18	4/19	4/20	4/21	4/22	4/23
pH - in			6.7-9.2	5.9-6.3	6.0-6.5					7.0-8.0	7.0-9.3	7.9-8.3
pH - reactor			6.5-7.3	6.6-7.5	7.8-8.0					7.4-7.6	7.4-7.7	7.1-7.8
Temperature - in (^{o} C.)					19-23					20-24	22-25	19-24
Temperature - reactor (^{o} C.)					17-19					18-20	19-20	17-19
NH_3 - nitrogen (mg/l)			0	0						2.24	3.64	
Org. Nitrogen (mg/l)			1.2	2.0					RE-SEEDING	1.68	3.08	
Ortho-Phosphate (mg/l)			16.9	16.5						20	20	
Poly-Phosphate (mg/l)			3.9	4.4						3.8	0	
MLSS (mg/l)			209	191						651	502	
MLVSS (mg/l)			152	130						544	409	
Sludge Volume Index			480	630						92	98	

Table 1-B (cont.)

Start-up of Unit 1 (March 23 - May 15, 1970)
Chemical and Physical Data

Date	4/24	4/25	4/26	4/27	4/28	4/29	4/30	5/1	5/2	5/3	5/4	5/5
pH - in	7.9-8.3			6.2-7.4	7.0-9.1	6.3-6.8	5.6-8.0	5.6-7.9			7.9-9.7	5.7-7.1
pH - reactor	7.4-7.7			7.7-8.1	7.8-8.0	7.7-8.2	7.5-8.1	7.3-8.2				
Temperature - in (^{o} C.)	17-20			16-28	19-26	19-27	18-25	19-21				
Temperature - reactor (^{o} C.)	19-20			18-19	18-20	17-19	17-19	18-19				
NH_3 - nitrogen (mg/l)					18.8	15.8						
Org. Nitrogen (mg/l)					7.0	8.4						
Ortho-Phosphate (mg/l)					20	18.5						
Poly-Phosphate (mg/l)					1.6	1.5						
MLSS (mg/l)					187	191						
MLVSS (mg/l)					140	135						
Sludge Volume Index					428	366						

Table 1-B (cont.)

Start-up of Unit 1 (March 23 - May 15, 1970)
Chemical and Physical Data

Date	5/6	5/7	5/8	5/9	5/10	5/11	5/12	5/13	5/14	5/15	5/16	5/17
pH - in	5.7-9.8	6.2-8.7	6.0-7.4			7.3-9.6	6.8-9.3	6.1-8.6	5.7-7.0	5.2-7.6		
pH - reactor	7.6-7.9	7.6-8.1	7.4-7.9			7.5-7.7	7.4-7.8	7.2-7.8	7.1-7.8	7.0-7.6		
Temperature - in (° C.)	20-25	19-27	20-24			18-29	22-29	22-28	24-27	22-31		
Temperature - reactor (° C.)	18-20	17-20	19-20			19-21	21-24	18-21	21-22	21-22		
NH_3 - nitrogen (mg/l)	7.3						3.8	3.4				
Organic Nitrogen (mg/l)	6.4						2.3	2.2				
Ortho-Phosphate (mg/l)	26.3						19.0	18.2				
Poly-Phosphate (mg/l)	7.0						1.6	1.8				
MLSS (mg/l)	215	200	225				111	101				
MLVSS (mg/l)	176						88					
Sludge Volume Index	42						High	High				

Table 2-A

Operation of Unit 1 (May 18 - September 30, 1970) *

* Part of the data from the operation of Unit 1 and the operation of other units are included in other applicable tables.

Date	5/18	5/19	5/20	5/21	5/22	5/23	5/24	5/25	5/26	5/27	5/28	5/29	5/30
Soluble TOC - in (mg/l)	291			386	336			352	406	462			
Soluble TOC - out (mg/l)	108			167	142			171	171	208			
% Reduction Soluble TOC	63.0			56.7	57.8			51.4	57.9	55.0			
Total COD - in (mg/l)		847	967						1107	1204			
Total COD - out (mg/l)		417	444						655	733			
% Reduction Total COD		50.7	54.0						40.8	39.2			
Soluble COD - in (mg/l)		734	812						1019	1082			
Soluble COD - out (mg/l)		264	287						473	532			
% Reduction Soluble COD		64.1	64.6						53.6	50.8			
% Soluble COD - in		86.6	84.0						92.0	89.7			
% Soluble COD - out		63.3	64.7						72.2	72.7			
Total BOD - in (mg/l)		328	183						266	317			
Total BOD - out (mg/l)		61	52						67	112			
% Reduction Total BOD		81.5	71.6						75.0	64.7			
Soluble TOD - in (mg/l)		764											
Soluble TOD - out (mg/l)		332											
% Reduction Soluble TOD		56.6											
Gallons Treated	5000	5000	5000	5000	5000	2000	2000	5000	9000	9000	1500	1500	1500

LONG WEEKEND SHUT DOWN

Table 2-A (cont.)

Operation of Unit 1 (May 18 - September 30, 1970)

Date	5/31	6/1	6/2	6/3	6/4	6/5	6/6	6/7	6/8	6/9	6/10	6/11	6/12
Soluble TOC - in (mg/l)												462	458
Soluble TOC - out (mg/l)												214	206
% Reduction Soluble TOC												53.6	55.0
Total COD - in (mg/l)		1366	1066	970						1018	1350		
Total COD - out (mg/l)	SHUT DOWN	761	734	717						726	1056		
% Reduction Total COD		44.3	31.1	26.1						28.7	21.8		
Soluble COD - in (mg/l)		1209	908	843						757	847		
Soluble COD - out (mg/l)		571	502	495						523	522		
% Reduction Soluble COD		52.9	44.8	41.3						30.9	38.4		
% Soluble COD - in		88.5	85.2	87.0						74.5	62.7		
% Soluble COD - out	LONG WEEKEND	75.0	68.5	69.0						72.0	49.5		
Total BOD - in (mg/l)			375	202						246	350		
Total BOD - out (mg/l)			110	66						43	93		
% Reduction Total BOD			70.7	67.4						82.5	73.4		
Soluble TOD - in (mg/l)			1023	912	940				710	908	1122		
Soluble TOD - out (mg/l)			620	555	642				540	621	568		
% Reduction Soluble TOD			39.4	39.2	31.7				24.0	31.6	49.3		
Gallons Treated	1500	9000	6750	9000	9000	1500	1500	1500	5000	9000	9000	9000	6000

Table 2-A (cont.)

Operation of Unit 1 (May 18 - September 30, 1970)

Date	6/13	6/14	6/15	6/16	6/17	6/18	6/19	6/20	6/21	6/22	6/23	6/24	6/25
Soluble TOC - in (mg/l)					370	332	392			416	350	513	335
Soluble TOC - out (mg/l)					210	191	189			227	203	255	178
% Reduction Soluble TOC					43.3	42.5	51.7			45.4	48.2	50.3	46.9
Total COD - in (mg/l)					865						1012	992	
Total COD - out (mg/l)					692						810	692	
% Reduction Total COD					20.0						20.0	30.3	
Soluble COD - in (mg/l)					737						866	832	
Soluble COD - out (mg/l)					491						469	412	
% Reduction Soluble COD					33.4						45.9	50.5	
% Soluble COD - in					85.2						85.5	84.0	
% Soluble COD - out					70.9						58.0	59.6	
Total BOD - in (mg/l)					188						355	309	
Total BOD - out (mg/l)					44						118	94	
% Reduction Total BOD					76.7						66.7	69.5	
Soluble TOD - in (mg/l)					670						765	795	
Soluble TOD - out (mg/l)					495						388	410	
% Reduction Soluble TOD					26.2						49.3	48.5	
Gallons Treated	1500	1500	1500	1500	9000	9000	9000	1500	1500	9000	9000	9000	9000

Table 2-A (cont.)

Operation of Unit 1 (May 18 - September 30, 1970)
- 1st week after vacation shutdown -

Date	6/26	6/27	6/28	7/13	7/14	7/15	7/16	7/17	7/18	7/19	7/20	7/21	7/22
Soluble TOC - in (mg/l)	320			408	502	340	375	285			210	373	260
Soluble TOC - out (mg/l)	172			188	260	180	190	160			150	165	125
% Reduction Soluble TOC	46.2			54.0	48.3	47.1	49.3	43.9			28.5	55.8	52.0
Total COD - in (mg/l)					1515	1241						801	627
Total COD - out (mg/l)					858	798						577	480
% Reduction Total COD					43.4	35.6						28.0	23.4
Soluble COD - in (mg/l)					1437	1094						751	546
Soluble COD - out (mg/l)					691	586						421	293
% Reduction Soluble COD					52.0	46.3						44.0	46.3
% Soluble COD - in					95.0	88.0						93.8	87.2
% Soluble COD - out					80.6	73.5						73.0	61.0
Total BOD - in (mg/l)					274	242						300	163
Total BOD - out (mg/l)					120	102						145	148
% Reduction Total BOD					56.2	57.9						51.7	9.2
Soluble TOD - in (mg/l)													
Soluble TOD - out (mg/l)													
% Reduction Soluble TOD													
Gallons Treated	9000	1500	1500	9000	9000	9000	9000	9000	1500	1500	10,000	21,000	10,000

Table 2-A (cont.)

Operation of Unit 1 (May 18 - September 30, 1970)

Date	7/23	7/24	7/25	7/26	7/27	7/28	7/29	7/30	7/31	8/1	8/2	8/3	8/4	8/5
Soluble TOC - in (mg/l)					490	372	377	383	290			360	637	553
Soluble TOC - out (mg/l)					202	170	187	187	166			207	355	307
% Reduction Soluble TOC					58.8	54.7	50.5	51.2	42.8			42.5	44.3	44.5
Total COD - in (mg/l)						1229								
Total COD - out (mg/l)						767								
% Reduction Total COD						37.5								
Soluble COD - in (mg/l)						1094								
Soluble COD - out (mg/l)						490								
% Reduction Soluble COD						55.5								
% Soluble COD - in						89.0								
% Soluble COD - out						63.9								
Total BOD - in (mg/l)						287								
Total BOD - out (mg/l)						160								
% Reduction Total BOD						44.3								
Soluble TOD - in (mg/l)														
Soluble TOD - out (mg/l)														
% Reduction Soluble TOD														
Gallons Treated	1500	1500	1500	1500	20,000	20,000	20,000	20,000	20,000	1500	1500	30,000	30,000	30,000

NO DYEING OPERATIONS

Table 2-A (cont.)

Operation of Unit 1 (May 18 - September 30, 1970)

Date	8/6	8/7	8/8	8/9	8/10	8/11	8/12	8/13	8/14	8/15	8/16	8/17	8/18	8/19
Soluble TOC - in (mg/l)	420	450				460						412	510	350
Soluble TOC - out (mg/l)	250	280				280						374	477	310
% Reduction Soluble TOC	40.5	37.8				39.1						9.2	6.5	11.4
Total COD - in (mg/l)								895						
Total COD - out (mg/l)														
% Reduction Total COD														
Soluble COD - in (mg/l)								678						
Soluble COD - out (mg/l)														
% Reduction Soluble COD														
% Soluble COD - in					HOLIDAY									
% Soluble COD - out														
Total BOD - in (mg/l)														
Total BOD - out (mg/l)														
% Reduction Total BOD														
Soluble TOD - in (mg/l)														
Soluble TOD - out (mg/l)														
% Reduction Soluble TOD														
Gallons Treated	30,000	30,000	1500	1500		39,000	54,200	57,000	55,000	1500	1500	54,000	57,000	47,250

Table 2-A (cont.)

Operation of Unit 1 (May 18 - September 30, 1970)

Date	8/20	8/21	8/22	8/23	8/24	8/25	8/26	8/27	8/28	8/29	8/30	8/31	9/1	9/2
Soluble TOC - in (mg/l)	360	330					425	415	515			605	460	765
Soluble TOC - out (mg/l)	230	300					370	340	345			435	380	360
% Reduction Soluble TOC	36.1	9.1					12.9	18.1	33.0			28.1	17.4	53.0
Total COD - in (mg/l)							1245							
Total COD - out (mg/l)							1049							
% Reduction Total COD							15.7							
Soluble COD - in (mg/l)							1170							
Soluble COD - out (mg/l)					NO DYEING	OPERATIONS	859							
% Reduction Soluble COD							26.6							
% Soluble COD - in							94.0							
% Soluble COD - out							81.8							
Total BOD - in (mg/l)							225							
Total BOD - out (mg/l)							155							
% Reduction Total BOD							31.1							
Soluble TOD - in (mg/l)														
Soluble TOD - out (mg/l)														
% Reduction Soluble TOD														
Gallons Treated	24,000*	16,500	1500	1500	1500	1500	21,150	30,000	18,000	1500	1500	30,000	30,000	30,000

* Flow reduced to obtain higher solids.

Table 2-A (cont.)

Operation of Unit 1 (May 18 - September 30, 1970)

Date	9/3	9/4	9/5	9/6	9/7	9/8	9/9	9/10	9/11	9/12	9/13	9/14	9/15	9/16	9/17	9/18
Soluble TOC - in (mg/l)	705	375				730	737	597						742	1110	837
Soluble TOC - out (mg/l)	420	295				403	483	477						444	660	540
% Reduction Soluble TOC	40.4	21.3				44.8	34.5	20.0						40.0	40.5	35.5
Total COD - in (mg/l)							1993							2279		
Total COD - out (mg/l)							1766							1375		
% Reduction Total COD							11.4							39.5		
Soluble COD - in (mg/l)							1829					NO ANALYSIS	INSTALLING FILTER	2112		
Soluble COD - out (mg/l)							1407							903		
% Reduction Soluble COD							23.1							57.2		
% Soluble COD - in							91.7							92.5		
% Soluble COD - out							79.2							66.5		
Total BOD - in (mg/l)							390							985		
Total BOD - out (mg/l)							290							415		
% Reduction Total BOD							25.6							47.8		
Soluble TOD - in (mg/l)																
Soluble TOD - out (mg/l)																
% Reduction Soluble TOD																
Gallons Treated	30,000	30,000	1500	1500		30,000	30,000	30,000	30,000	1500	1500	1500	1500	30,000	30,000	30,000

Table 2-A (cont.)

Operation of Unit 1 (May 18 - September 30, 1970)

Date	9/19	9/20	9/21	9/22	9/23	9/24	9/25	9/26	9/27	9/28	9/29	9/30
Soluble TOC - in (mg/l)			1150	673	610	780	660			657	605	900
Soluble TOC - out (mg/l)			655	557	500	507	463			497	425	550
% Reduction Soluble TOC			43.0	17.3	18.0	35.0	29.8			24.4	29.8	38.9
Total COD - in (mg/l)												2781
Total COD - out (mg/l)												2440
% Reduction Total COD												12.3
Soluble COD - in (mg/l)												2405
Soluble COD - out (mg/l)												1565
% Reduction Soluble COD												34.8
% Soluble COD - in												86.5
% Soluble COD - out												64.1
Total BOD - in (mg/l)												
Total BOD - out (mg/l)												
% Reduction Total BOD												
Soluble TOD - in (mg/l)												
Soluble TOD - out (mg/l)												
% Reduction Soluble TOD												
Gallons Treated	1500	1500	30,000	18,000	20,000	21,000	30,000	1500	1500	30,000	18,000	30,000

Table 2-B

Operation of Unit 1 (May 18 - September 30, 1970) *

* Part of the data from the operation of Unit 1 and the operation of other units are included in other applicable tables.

Date	5/18	5/19	5/20	5/21	5/22	5/23	5/24	5/25	5/26	5/27	5/28		5/29
pH - in	5.8-8.6	6.8-8.9	6.7-7.6	5.0-5.8	6.0-7.5			7.0-9.7	6.8-9.3	6.3-8.2			
pH - reactor	7.3-7.9	7.5-8.0	7.3-7.7	7.3-7.8	7.4-7.8			7.1-7.3	7.2-7.3	6.3-7.7			
Temperature - in (^{o} C.)	19-31	20-26	19-25					19-29	22-35	22-32			
Temperature - reactor (^{o} C.)	20-25	19-20	19-22					20-21	20-22	21-23			
NH_3 - Nitrogen (mg/l)		10.8	9.3						22.4	19.6			
Organic - Nitrogen (mg/l)		4.3	3.4						3.1	4.5			
Ortho-Phosphate (mg/l)		25.4	28.0						24.8	25.5		LONG WEEKEND	SHUT DOWN
Poly-Phosphate (mg/l)		4.4	0						6.2	3.3			
MLSS (mg/l)		104	118						117	160			
MLVSS (mg/l)													
Sludge Volume Index (mg/l)		240	170						Very High	Very High			

Table 2-B (cont.)

Operation of Unit 1 (May 18 - September 30, 1970) *

* Part of the data from the operation of Unit 1 and the operation of other units are included in other applicable tables.

Date	5/30	5/31	6/1	6/2	6/3	6/4	6/5	6/6	6/7	6/8	6/9	6/10	6/11	6/12
pH - in			6.4-9.4	6.2-9.2	5.9-9.1	6.3-7.5				6.6-7.8	6.7-9.0	6.0-7.3	4.9-7.7	5.8-9.4
pH - reactor			7.6-8.0	7.3-7.9	7.2-7.7	7.3-8.0				7.4-7.5	7.5-7.8	6.9-7.3	6.8-7.6	7.1-7.6
Temperature - in (^{o}C.)			20-39	25-29	24-30	26-29				21-23	21-30	24-32	26-33	27-34
Temperature - reactor (^{o} C.)			22-23	23-24	23-25	24-25				21-22	22-23	24-25	25-27	26-27
NH_3 - Nitrogen (mg/l)				19.2	17.5						19.0	11.2		
Organic - Nitrogen (mg/l)				5.2	4.5						6.4	5.4		
Ortho-Phosphate (mg/l)				30.3	31.4						47.8	48.0		
Poly-Phosphate (mg/l)				3.2	2.1						8.2	5.3		
MLSS (mg/l)				252	156						165	238		
MLVSS (mg/l)				177	-						118	189		
Sludge Volume Index (mg/l)				32	26						High	High		

Table 2-B (cont.)

Operation of Unit 1 (May 18 - September 30, 1970) *

* Part of the data from the operation of Unit 1 and the operation of other units are included in other applicable tables.

Date	6/13	6/14	6/15	6/16	6/17	6/18	6/19	6/20	6/21	6/22	6/23	6/24
pH - in					6.7-9.4	6.9-9.3	5.2-7.3			6.0-9.5	5.5-8.4	5.2-9.3
pH - reactor					7.5-7.7	7.7-8.0	7.2-7.7			7.4-7.8	7.1-7.6	7.0-7.9
Temperature - in (^{o} C.)					24-33	26-36	27-32			24-35	24-32	27-33
Temperature - reactor (^{o} C.)					23-25	24-25	25-26			23-25	25-26	25-28
NH_3 - Nitrogen (mg/l)				21.3	20.4						5.9	7.8
Organic - Nitrogen (mg/l)				7.3	4.8						5.0	4.2
Ortho-Phosphate (mg/l)				37.5	31.3						34.3	33.2
Poly-Phosphate (mg/l)				1.5	1.5						1.4	0.7
MLSS (mg/l)				166	138						228	206
MLVSS (mg/l)				128	104						200	189
Sludge Volume Index (mg/l)				High	High						57	High

Table 2-B (cont.)

Operation of Unit 1 (May 18 - September 30, 1970) *

Part of the data from the operation of Unit 1 and the operation of other units are included in other applicable tables.

						- 1st week after vacation shutdown -						
Date	6/25	6/26	6/27	6/28	7/13	7/14	7/15	7/16	7/17	7/18	7/19	7/20
pH - in	6.4-9.7	6.3-9.9			6.2-7.0	6.7-7.4	5.4-6.2	6.8-9.5	5.2-8.8			6.4-8.1
pH - reactor	7.2-7.7	7.5-7.8			7.5-7.6	7.4-7.8	7.0-7.6	6.8-7.5	6.8-7.1			7.2-7.4
Temperature - in (^{o} C.)	27-36	27-36			23-30	27-31	27-30	28-38	28-29			25-27
Temperature - reactor (^{o} C.)	25-28	26-29			23-25	24-26	25-27	26-27	26-28			26-27
NH_3 - Nitrogen (mg/l)						23.7	15.9					
Organic - Nitrogen (mg/l)						5.4	4.4					
Ortho-Phosphate (mg/l)						48	40					
Poly-Phosphate (mg/l)						1.3	1.5					
MLSS (mg/l)						164	210					
MLVSS (mg/l)						147	202					
Sludge Volume Index						18	24					

Table 2-B (cont.)

Operation of Unit 1 (May 18 - September 30, 1970) *

* Part of the data from the operation of Unit 1 and the operation of other units are included in other applicable tables

Date	7/21	7/22	7/23	7/24	7/25	7/26	7/27	7/28	7/29	7/30	7/31	8/1
pH - in	6.8-9.6	6.8-7.5					8.3-9.1	6.6-9.7	8.2-10.1	5.3-9.5	6.4-7.3	
pH - reactor	7.5-8.1	7.4-7.7					7.4-7.6	7.2-7.9	7.3-7.6	6.9-7.6	7.1-7.8	
Temperature - in (^{o} C.)	25-43	28-30					30-43	33-40	32-38	31-35	31-33	
Temperature - reactor (^{o} C.)	26-29	28-29					28-29	29-32	31-32	32-33	31-32	
NH_3 - Nitrogen (mg/l)	9.5		NO DYEING	OPERATIONS								
Organic - Nitrogen (mg/l)	4.2											
Ortho-Phosphate (mg/l)	27.8											
Poly-Phosphate (mg/l)	8.2											
MLSS (mg/l)	100											
MLVSS (mg/l)	92											
Sludge Volume Index	30											

Table 2-B (cont.)

Operation of Unit 1 (May 18 - September 30, 1970) *

* Part of the data from the operation of Unit 1 and the operation of other units are included in other applicable tables.

Date	8/2	8/3	8/4	8/5	8/6	8/7	8/8	8/9	8/10	8/11	8/12	8/13
pH - in		6.3-8.8	4.8-9.0	4.5-9.1	4.8-7.1	5.0-9.1			HOLIDAY	6.3-9.4	5.8-9.6	6.7-8.9
pH - reactor		6.9-7.0	6.2-6.9	6.7-7.1	6.6-7.5	6.4-6.9				6.9-7.2	6.9-7.3	6.8-6.9
Temperature - in (° C.)		29-41	33-34	29-42	31-36	31-41				27-55	30-32	28-30
Temperature - reactor (° C.)		30-32	31-34	29-36	32-33	31-34				28-32	32-35	30-31

Date	8/14	8/15	8/16	8/17	8/18	8/19	8/20	8/21	8/22	8/23	8/24	8/25
pH - in	6.3-9.2			5.1-9.2	6.4-9.5	6.8-7.5	7.7-8.2	6.6-8.8			NO DYEING	OPERATIONS
pH - reactor	6.7-7.1			6.3-6.8	6.1-6.6	7.0-7.2	7.2-7.4	6.8-7.5				
Temperature - in (° C.)	29-33			28-40	29-35	29-32	30-38	30-35				
Temperature - reactor (° C.)	30-32			30-33	29-33	30-31	31-33	30-34				

Date	8/26	8/27	8/28	8/29	8/30	8/31	9/1	9/2	9/3	9/4	9/5	9/6
pH - in	8.1-9.0					5.9-8.4	6.1-8.6	5.6-6.6	4.9-5.0	6.5-6.7		
pH - reactor	8.1-8.3					5.6-6.3	6.1-6.8	6.3-6.4	5.3-6.2	6.5-6.8		
Temperature - in (° C.)	35-37	33-35	36-37			29-37	30-32	30-34	31-33	29-30		
Temperature - reactor (° C.)	31-33	32-33	34.35			30-32	30-31	30-31	31-32	29-30		

Table 2-B (cont.)

Operation of Unit 1 (May 18 - September 30, 1970) *

* Part of the data from the operation of Unit 1 and the operation of other units are included in other applicable tables.

Date	9/7	9/8	9/9	9/10	9/11	9/12	9/13	9/14	9/15	9/16	9/17	9/18	9/19
pH - in	HOLIDAY		5.2-7.1	6.0-6.8				NO ANALYSIS	NO ANALYSIS	7.2-10.6	9.4-10.8	7.6-10.1	
pH - reactor			6.3-7.1	6.9-7.6						7.5-8.2	6.8-7.6	7.7-8.2	
Temperature - in (° C.)		32-37	31-33	31-36						29-31	29-34	31-34	
Temperature - reactor (° C.)		29-30	29-31	31-33						28-31	30-31	29-32	

Date	9/20	9/21	9/22	9/23	9/24	9/25	9/26	9/27	9/28	9/29	9/30
pH - in		5.9-11.1	7.9-9.2	6.7-9.0	7.1-10.1	9.3-9.6			6.5-9.6	9.3-10.0	7.3-10.2
pH - reactor		7.5-9.3	7.1-7.6	7.1-7.9	7.2-8.1	6.4-7.9			7.5-7.7	7.5-8.1	7.3-7.5
Temperature - in (° C.)		28-38	33-34	32-34	33-37	32-34			29-32	29-30	31-32
Temperature - reactor (° C.)		28-33	32-33	30-32	33-35	32-34			28-30	29-30	31-32

Table 3-A

Start-up and Operation of Pilot Unit 2
Carbon Adsorption — Anaerobic Regeneration
Series B — (July 29 - August 7, 1970)

July 29- 30
Treatment Cycle

Date	July 29 9:00 A.M.		11:00 A.M.		1:00 P.M.		3:00 P.M.		July 30 9:00 A.M.	
	Influent	Effluent	Influent	Effluent	Influent	Effluent	Influent	Effluent	Influent	Effluent
pH	6.9	6.6	7.2	8.3	7.3	7.7	7.4	7.6	6.6	7.2
Total Carbon (mg/l)	270	220	280	170	270	170	300	170	320	265
Inorganic Carbon (mg/l)	70	70	60	95	65	70	70	75	70	60
Total Organic Carbon (mg/l)	200	150	220	75	205	100	230	95	250	205
Total COD (mg/l)	932	1670	796	360	914	467	957	420	1411	824
MLSS (mg/l)	870	216	176	106	207	110	180	112	572	100
MLVSS (mg/l)	807	216	176	98	180	105	157	98	433	80
BOD (mg/l)			130	82			231	109	256	145

Table 3-A (cont.)

Start-up and Operation of Pilot Unit 2
Carbon Adsorption - Anaerobic Regeneration
Series B (July 29 - August 7, 1970)

July 30 - 31
Regeneration Cycle

Date	July 30 9:00 A.M.	11:00 A.M.	1:00 P.M.	3:00 P.M.	July 31 9:00 A.M.
pH	6.6	6.4	6.5	6.5	6.2
Total Carbon (mg/l)	220	210	210	195	200
Inorganic Carbon (mg/l)	80	90	90	95	120
Total Organic Carbon (mg/l)	140	120	120	100	80
Total COD (mg/l)	562	452	430	404	424
MLSS (mg/l)	165	80	161	158	257
MLVSS (mg/l)	113	56	87	80	86
BOD (mg/l)	125			223	195
Volatile Acid (mg/l)	0	0	108	204	0

Table 3-A (cont.)

Start-up and Operation of Pilot Unit 2
Carbon Adsorption - Anaerobic Regeneration
Series B (July 29 - August 7, 1970)

July 31 - August 1
Treatment Cycle

Date	July 31 9:00 A.M.		11:00 A.M.		1:00 P.M.		3:00 P.M.		August 1 9:00 A.M.	
	Influent	Effluent	Influent	Effluent	Influent	Effluent	Influent	Effluent	Influent	Effluent
pH	6.6	6.6	7.1	6.5	7.2	6.8	7.0	6.9	6.0	6.8
Total Carbon (mg/l)	350	340	260	190	260	210	290	210	320	210
Inorganic Carbon (mg/l)	70	40	70	70	60	60	60	60	60	50
Total Organic Carbon (mg/l)	280	250	190	120	200	150	230	150	260	160
Total COD (mg/l)	2700	1460	775	458	820	646	830	523	28,200	712
MLSS (mg/l)	1800	407	139	61	189	163	115	110	9300	252
MLVSS (mg/l)	325	1340	132	45	136	131	90	90	5800	248
BOD (mg/l)			74	56			78	41	1050	72

Table 3-A (cont.)

Start-up and Operation of Pilot Unit 2
Carbon Adsorption - Anaerobic Regeneration
Series B (July 29 - August 7, 1970)

August 1 - 3
Regeneration Cycle

Date	August 1 9:00 A.M.	11:00 A.M.	1:00 P.M.	3:00 P.M.	August 3 9:00 A.M.
pH	6.3	5.8			6.5
Total Carbon (mg/l)	200	195			400
Inorganic Carbon (mg/l)	70	90			230
Total Organic Carbon (mg/l)	130	105			170
Total COD (mg/l)	538	444			714
MLSS (mg/l)	92	53			21
MLVSS (mg/l)	48	51			17
BOD (mg/l)	77	58			210
Volatile Acid (mg/l)	84	204			744

Table 3-A

Start-up and Operation of Pilot Unit 2
Carbon Adsorption - Anaerobic Regeneration
Series B (July 29 - August 7, 1970)

August 3 - 4
Treatment Cycle

Date	August 3 9:00 A.M.		11:00 A.M.		1:00 P.M.		3:00 P.M.		August 4 9:00 A.M.	
	Influent	Effluent	Influent	Effluent	Influent	Effluent	Influent	Effluent	Influent	Effluent
pH	6.3	6.4	6.7	6.6	7.0	6.7	6.8	6.7	5.9	6.3
Total Carbon (mg/l)	550	380	260	230	280	265	290	230	480	405
Inorganic Carbon (mg/l)	90	140	60	70	60	60	50	50	45	40
Total Organic Carbon (mg/l)	460	240	200	160	220	205	240	180	435	365
Total COD (mg/l)	11200	6224	857	1385	828	666	1001	980	1654	1307
MLSS (mg/l)	8000	3550	147	531	100	106	203	157	165	153
MLVSS (mg/l)	5950	2800	147	450	96	106	180	145	165	145
BOD (mg/l)			174	192			162	167	344	252

Table 3-A (cont.)

Start-up and Operation of Pilot Unit 2
Carbon Adsorption - Anaerobic Regeneration
Series B (July 29 - August 7, 1970)

August 4 - 5
Regeneration Cycle

Date	August 4 9:00 A.M.	11:00 A.M.	1:00 P.M.	3:00 P.M.	August 5 9:00 A.M.
pH	6.2	6.2	6.1	6.1	6.1
Total Carbon (mg/l)	370	340	410	380	510
Inorganic Carbon (mg/l)	70	65	55	70	120
Total Organic Carbon (mg/l)	300	275	355	310	390
Total COD (mg/l)	912	1980	1684	1307	1504
MLSS (mg/l)	120	2000	1290	200	156
MLVSS (mg/l)	101	1700	960	180	124
BOD (mg/l)	140			396	450
Volatile Acid (mg/l)	120	432	288	384	768

Table 3-A (cont.)

Start-up and Operation of Pilot Unit 2
Carbon Adsorption - Anaerobic Regeneration
Series B (July 29 - August 7, 1970)

August 5 - 6
Treatment Cycle

Date	August 5 9:00 A.M.		11:00 A.M.		1:00 P.M.		3:00 P.M.		August 6 9:00 A.M.	
	Influent	Effluent	Influent	Effluent	Influent	Effluent	Influent	Effluent	Influent	Effluent
pH	5.9	6.0	6.8	6.5	6.7	6.6	6.5	6.6	5.9	6.7
Total Carbon (mg/l)	510	500	330	310	350	295	440	360	445	395
Inorganic Carbon (mg/l)	40	55	50	50	50	40	50	50	40	40
Total Organic Carbon (mg/l)	470	445	280	260	300	255	390	310	405	355
Total COD (mg/l)	5240	4790	1030	1190	1640	1417	1620	1120	10,240	1970
MLSS (mg/l)	2443	2060	250	380	705	527	495	217	5650	560
MLVSS (mg/l)	2060	1800	209	340	568	460	415	200	4700	500
BOD (mg/l)			122	167			190	170		

Table 3-A (cont.)

Start-up and Operation of Pilot Unit 2
Carbon Adsorption - Anaerobic Regeneration
Series B (July 29 - August 7, 1970)

August 5 - 6
Treatment Cycle

Date	August 6 9:00 A.M.	11:00 A.M.	1:00 P.M.	3:00 P.M.	August 7 9:00 A.M.
pH	6.0	6.2	6.1	6.1	6.3
Total Carbon (mg/l)	335	320	310	330	390
Inorganic Carbon (mg/l)	55	65	60	75	110
Total Organic Carbon (mg/l)	280	255	250	255	280
Total COD (mg/l)	1394	1140		1124	1065
MLSS (mg/l)	254	146		139	121
MLVSS (mg/l)	202	123		115	102
BOD (mg/l)					
Volatile Acid (mg/l)	480	480		504	528

Table 3-A (cont.)

Start-up and Operation of Pilot Unit 2
Carbon Adsorption — Anaerobic Regeneration
Series B — (July 29 - August 7, 1970

August 7
Treatment Cycle

Date	August 7 9:00 A.M.		11:00 A.M.		1:00 P.M.		2:00 P.M.	
	Influent	Effluent	Influent	Effluent	Influent	Effluent	Influent	Effluent
pH	5.8	5.9	5.7	6.1	6.2	6.4	6.4	6.5
Total Carbon (mg/l)	540	415	415	360	340	320	360	325
Inorganic Carbon (mg/l)	40	35	30	35	35	35	40	40
Total Organic Carbon (mg/l)	500	380	385	325	305	285	320	285

Table 4-A

Start-up and Operation of Pilot Unit 3
Carbon Adsorption - Aerobic Regeneration
Series No. 1 (August 13 - 24, 1970)

August 13 - 14
Treatment Cycle

	August 13								August 14			
	9:00 A.M.		11:00 A.M.		1:00 P.M.		3:00 P.M.		9:00 A.M.		11:00 A.M.	
	Influent	Effluent	Influent	Effluent	Influent	Effluent	Influent	Effluent	Influent	Effluent	Influent	Effluent
pH	6.3	8.5	6.7	7.3	6.7	6.9	7.0	7.0	6.7	6.9	6.7	6.8
Total Carbon (mg/l)									240	240	230	210
Inorganic Carbon (mg/l)									40	40	35	35
Total Organic Carbon (mg/l)									200	200	195	175
Total COD (mg/l)	1576	680	1135	797	990	909	992	791	859	930	769	729
MLSS (mg/l)	220	55	167	121	110	143	106	71	129	149	149	96
MLVSS (mg/l)	203	49	134	117	100	134	106	71	117	135	115	76
BOD (mg/l)			123	53			77	64			146	123

Table 4-A (cont.)

Start-up and Operation of Pilot Unit 3
Carbon Adsorption - Aerobic Regeneration
Series No. 1 (August 13 - 24, 1970)

	August 13 - 14 Treatment Cycle				August 14 - 17 Regeneration Cycle	August 17 - 18 Treatment Cycle					
	August 14				August 17	August 17					
	1:00 P.M.		3:00 P.M.		9:00 A.M.	9:00 A.M.		11:00 A.M.		1:00 P.M.	
	Influent	Effluent	Influent	Effluent		Influent	Effluent	Influent	Effluent	Influent	Effluent
pH	7.1	7.1	6.9	6.9	7.1	6.1	6.9	6.4	6.6	6.8	6.8
Total Carbon (mg/l)	320	270	410	340	115	405	330	410	335	335	300
Inorganic Carbon (mg/l)	35	35	35	30	55	35	57	27	35	20	20
Total Organic Carbon (mg/l)	285	235	375	310	60	370	273	383	300	315	280
Total COD (mg/l)	1073	979	1425	1190	197	1645	1330	1273	1000	1353	1169
MLSS (mg/l)	191	93	155	115	34	300	362	145	95	124	68
MLVSS (mg/l)	160	73	134	98	29	255	324	124	84	94	68
BOD (mg/l)			209	178	40			189	176		

Table 4-A (cont.)

Start-up and Operation of Pilot Unit 3
Carbon Adsorption - Aerobic Regeneration
Series No. 1 (August 13 - 24, 1970)

	August 17 - 18 Treatment Cycle				August 18 - 19 Regeneration Cycle				
	August 17 3:00 P.M.		August 18 9:00 A.M.		August 18 9:00 A.M.	11:00 A.M.	1:00 P.M.	3:00 P.M.	August 19 9:00 A.M.
	Influent	Effluent	Influent	Effluent					
pH	7.1	6.9	5.2	5.3	5.7	5.6	5.7	5.6	5.7
Total Carbon (mg/l)	465	375	620	470	420	385	345	330	248
Inorganic Carbon (mg/l)	25	25	45	37	67	70	50	45	40
Total Organic Carbon (mg/l)	440	350	575	433	353	315	295	285	208
Total COD (mg/l)	1392	1417	1845	1384	1071	923	919	891	760
MLSS (mg/l)	100	64	130	148	75	45	34	37	41
MLVSS (mg/l)	84	61	123	134	63	39	31	31	35
BOD (mg/l)	543	346	603	496	422			354	271

Table 4-A (cont.)

Start-up and Operation of Pilot Unit 3
Carbon Adsorption - Aerobic Regeneration
Series No. 1 (August 13 - 24, 1970)

August 19 - 20
Treatment Cycle

	August 19 9:00 A.M.		11:00 A.M.		1:00 P.M.		3:00 P.M.		August 20 9:00 A.M.	
	Influent	Effluent	Influent	Effluent	Influent	Effluent	Influent	Effluent	Influent	Effluent
pH	6.3	6.5	6.8	6.6	7.1	6.6	7.2	6.4	6.5	6.8
Total Carbon (mg/l)	310	300	340	310	380	310	430	375	290	280
Inorganic Carbon (mg/l)	50	50	55	55	60	50	70	70	90	90
Total Organic Carbon (mg/l)	260	250	285	255	320	260	360	305	200	190
Total COD (mg/l)	887	1012	844	747	957	764	917	880	2330	742
MLSS (mg/l)	57	144	103	58	113	73	133	71	1088	68
MLVSS (mg/l)	39	108	79	51	85	67	91	49	925	62
BOD (mg/l)			150	134			211	194	450	186

Table 4-A (cont.)

Start-up and Operation of Pilot Unit 3
Carbon Adsorption - Aerobic Regeneration
Series No. 1 (August 13 - 24, 1970)

August 20 - 21
Regeneration Cycle

	August 20 9:00 A.M.	11:00 A.M.	1:00 P.M.	3:00 P.M.	August 21 9:00 A.M.
pH	6.6	6.7	6.6	6.4	7.3
Total Carbon (mg/l)	280	260	250	230	200
Inorganic Carbon (mg/l)	90	70	90	90	110
Total Organic Carbon (mg/l)	190	190	160	140	90
Total COD (mg/l)	1367	774	740	622	398
MLSS (mg/l)	395	113	83	73	36
MLVSS (mg/l)	325	98	74	64	32
BOD (mg/l)	375			171	169

Table 4-A (cont.)

Start-up and Operation of Pilot Unit 3
Carbon Adsorption - Aerobic Regeneration
Series No. 1 (August 13 - 24, 1970)

August 21 - 22
Treatment Cycle

	August 21 9:00 A.M.		11:00 A.M.		1:00 P.M.		3:00 P.M.		August 22 9:00 A.M.	
	Influent	Effluent	Influent	Effluent	Influent	Effluent	Influent	Effluent	Influent	Effluent
pH	6.7	6.8	7.3	7.1	7.0	7.0	6.9	7.1	6.7	7.1
Total Carbon (mg/l)	390	380	325	290	350	300	345	285	290	265
Inorganic Carbon (mg/l)	90	110	95	100	105	100	110	110	100	100
Total Organic Carbon (mg/l)	300	270	230	190	245	200	235	175	190	165
Total COD (mg/l)	1062	1397	835	794	802	632			732	682
MLSS (mg/l)	98	360	155	140	98	66			42	78
MLVSS (mg/l)	91	355	133	135	98	61			42	75
BOD (mg/l)			170	154	146	121			117	144

Table 4-A (cont.)

Start-up and Operation of Pilot Unit 3
Carbon Adsorption - Aerobic Regeneration
Series No. 1 (August 13 - 24, 1970)

August 22 - 24
Regeneration Cycle

	August 22 9:00 A.M.	11:00 A.M.	August 24 9:00 A.M.
pH	6.8	6.9	7.4
Total Carbon (mg/l)	260	240	170
Inorganic Carbon (mg/l)	100	110	150
Total Organic Carbon (mg/l)	160	130	20
Total COD (mg/l)	699	494	
MLSS (mg/l)	98	65	
MLVSS (mg/l)	90	65	
BOD (mg/l)	176	114	

Table 4-B

Start-up and Operation of Pilot Unit 3
Carbon Adsorption - Aerobic Regeneration
Series No. 2 (September 3-11, 1970)

September 3-4
Treatment Cycle

	September 3 9:00 A.M.		11:00 A.M.		1:00 P.M.		3:00 P.M.		September 4 9:00 A.M.	
	Influent	Effluent	Influent	Effluent	Influent	Effluent	Influent	Effluent	Influent	Effluent
pH	6.1	7.4	5.6	6.3	5.5	6.2	5.3	5.8	6.4	6.6
Total Carbon (mg/l)	420	225	420	340	420	310	485	340	350	285
Inorganic Carbon (mg/l)	50	90	30	30	20	30	20	20	30	30
Total Organic Carbon (mg/l)	370	135	390	310	400	280	465	320	320	255
Total COD (mg/l)	1607	657	1610	1247	1557	1140	1710	1227	1485	1217
MLSS (mg/l)	525	123	412	386	507	264	450	260	394	275
MLVSS (mg/l)	525	113	406	386	500	236	425	248	394	275
BOD (mg/l)			610	449			655	437	446	242

Table 4-B (cont.)

Start-up and Operation of Pilot Unit 3
Carbon Adsorption - Aerobic Regeneration
Series No. 2 (September 3-11, 1970)

	September 3-4 Treatment Cycle						September 8 Regeneration Cycle
			September 4				September 8
	11:00 A.M.		1:00 P.M.		3:00 P.M.		9:00 A.M.
	Influent	Effluent	Influent	Effluent	Influent	Effluent	
pH	6.0	6.3	6.6	6.4	6.5	6.8	6.9
Total Carbon (mg/l)	350	290	260	220	280	230	60
Inorganic Carbon (mg/l)	20	30	25	30	30	30	30
Total Organic Carbon (mg/l)	330	260	235	190	250	200	30
Total COD (mg/l)	1410	1360	1004	837			275
MLSS (mg/l)	313	224	192	156			119
MLVSS (mg/l)	313	208	175	152			87
BOD (mg/l)			288	188			100

Table 4-B (cont.)

Start-up and Operation of Pilot Unit 3
Carbon Adsorption - Aerobic Regeneration
Series No. 2 (September 3-11, 1970)

September 8 - 9
Treatment Cycle

	September 8 9:00 A.M.		11:00 A.M.		1:00 P.M.		3:00 P.M.		September 9 9:00 A.M.	
	Influent	Effluent	Influent	Effluent	Influent	Effluent	Influent	Effluent	Influent	Effluent
pH			pH METER DOWN						7.2	7.4
Total Carbon (mg/l)	300	260	485	340	410	350	585	445	380	360
Inorganic Carbon (mg/l)	35	35	40	40	40	50	40	40	85	85
Total Organic Carbon (mg/l)	265	225	445	300	370	300	545	405	295	275
Total COD (mg/l)	860	692	1309	975	1425	1110	1752	1330	1375	1129
MLSS (mg/l)	123	223	129	92	106	111	77	110	344	234
MLVSS (mg/l)	86	153	95	75	76	85	46	85	326	216
BOD (mg/l)			428	302			650	471	337	271

Table 4-B (cont.)

Start-up and Operation of Pilot Unit 3
Carbon Adsorption Aerobic Regeneration
Series No. 2 (September 3-11, 1970)

September 9 - 10
Regeneration Cycle

	September 9 9:00 A.M.	11:00 A.M.	1:00 P.M.	3:00 P.M.	September 10 9:00 A.M.
pH	7.1	7.1	7.1	7.2	7.1
Total Carbon (mg/l)	355	285	280	255	250
Inorganic Carbon (mg/l)	85	95	100	90	110
Total Organic Carbon (mg/l)	270	190	180	165	140
Total COD (mg/l)	1202	742	672	672	579
MLSS (mg/l)	111	78	98	61	40
MLVSS (mg/l)	111	71	95	56	38
BOD (mg/l)	333			178	219

Table 4-B (cont.)

Start-up and Operation of Pilot Unit 3
Carbon Adsorption - Aerobic Regeneration
Series No. 2 (September 3-11, 1970)

September 10-11
Treatment Cycle

	September 10 9:00 A.M.		11:00 A.M.		1:00 P.M.		3:00 P.M.		September 11 9:00 A.M.	
	Influent	Effluent	Influent	Effluent	Influent	Effluent	Influent	Effluent	Influent	Effluent
pH	6.9	7.1	7.1	7.1	7.2	7.2	6.9	7.1	6.9	7.4
Total Carbon (mg/l)	515	450	480	460	505	475	515	480	465	410
Inorganic Carbon (mg/l)	70	85	65	65	50	55	55	55	65	80
Total Organic Carbon (mg/l)	445	365	415	395	455	420	460	425	400	330
Total COD (mg/l)	1990	1732	1811	1635	1895	1729	1922	1735	1749	1410
MLSS (mg/l)	242	273	230	207	240	207	220	210	325	171
MLVSS (mg/l)	242	260	223	207	210	193	220	177	325	166
BOD (mg/l)			327	323			368	367	176	150

Table 5

Start-up and Operation of Unit 1 - Pilot Unit 2 - Pilot Unit 3
in Series (November 9 - December 11, 1970)

A = RAW INFLUENT B = UNIT 1 EFFLUENT C = PILOT UNIT 2 EFFLUENT D = PILOT UNIT 3 EFFLUENT

November 9 - 10
Treatment Cycle

November 9	9:00 A.M.				10:00 A.M.				11:00 A.M.				12:00 A.M.			
	A	B	C	D	A	B	C	D	A	B	C	D	A	B	C	D
pH	7.2	7.1	7.1	7.1		7.3	7.2	7.3		7.4	7.4	7.3		7.4	7.3	7.4
Temperature (° C.)	22	18	18	18		21	21	21		20	20	20		22	22	22
Total Carbon (mg/l)	460	420	390	135		420	365	150		400	360	175		410	360	240
Inorganic Carbon (mg/l)	20	40	20	10		25	30	30		35	35	20		30	35	30
Total Organic Carbon (mg/l)	440	380	370	125		395	335	120		365	325	155		380	325	210
Total COD (mg/l)		1280	1100	400		1280	1060	480		1301	1100	480		1520	1120	740
MLSS (mg/l)		76	55	57		90	68	42		27	56	32		96	69	79
MLVSS (mg/l)		63	45	49		72	59	39		15	49	29		78	60	69
BOD (mg/l)	350	290	310	115						310	300	170				

Table 5 (cont.)

Start-up and Operation of Unit 1 - Pilot Unit 2 - Pilot Unit 3 in Series (November 9-December 11, 1970)

A = RAW INFLUENT B = UNIT 1 EFFLUENT C = PILOT UNIT 2 EFFLUENT D = PILOT UNIT 3 EFFLUENT

November 9 - 10
Treatment Cycle

November 9	1:00 P.M.			2:00 P.M.			November 10 9:00 A.M.			REGENERATION
	A	B	C	D	A	B	C	D	A	B	C	D	11/10 THRU 11/12 - 9:00 A.M. 48 HOURS
pH		8.2	7.5	7.2		9.6	8.5	8.0	9.2	8.7	9.9	9.4	
Temperature (° C.)		23	23	23		24	23	23	23	20	20	20	
Total Carbon (mg/l)		360	290	220		560	435	325	985	860	815	743	
Inorganic Carbon (mg/l)		10	25	20		20	25	20	50	60	60	40	
Total Organic Carbon (mg/l)		350	265	200		540	410	305	935	800	755	703	
Total COD (mg/l)		1280	1120	900		2101	1400	1140		3680	3780	2907	
MLSS (mg/l)		82	88	60		138	90	99		293	185	162	
MLVSS (mg/l)		65	78	50		118	75	81		247	159	132	
BOD (mg/l)		330	340	235						1515	1394	1333	

Table 5 (cont.)

Start-up and Operation of Unit 1 - Pilot Unit 2 - Pilot Unit 3 in Series (November 9 - December 11, 1970)

A = RAW INFLUENT B = UNIT 1 EFFLUENT C = PILOT UNIT 2 EFFLUENT D = PILOT UNIT 3 EFFLUENT

November 12 - 13
Treatment Cycle

November 12	9:00 A.M.				10:00 A.M.				11:00 A.M.				12:00 A.M.			
	A	B	C	D	A	B	C	D	A	B	C	D	A	B	C	D
pH	9.7	8.4	7.9	7.4		9.8	8.9	7.6		10.3	9.7	8.4		10.5	9.9	7.8
Temperature (° C.)	24	21	21	21		21	21	21		23	23	23		24	24	24
							T O C INOPERABLE									
Total COD (mg/l)		880	980	1120		740	840	860		780	740	660		800	760	620
MLSS (mg/l)		41	62	110		32	43	78		43	31	33		51	45	50
MLVSS (mg/l)		33	55	101		26	39	93		29	25	29		36	40	49
BOD (mg/l)	470	320	450	450				- - - - - - - -		320	310	260				
		1:00 P.M.				2:00 P.M.			November 13 -9:00 A.M.				REGENERATION			
pH		9.6	9.6	8.2		9.6	9.3	7.7	8.7	7.4	7.4	7.2	11/13 THRU 11/16 - 9:00 A.M. 72 HOURS			
Temperature (° C.)		22	22	22		23	23	24	22	21	21	21				
							T O C INOPERABLE									
Total COD (mg/l)		1200	1040	880		1380	1180	980		2060	1760	1500				
MLSS (mg/l)		56	49	55		70	56	47		128	110	153				
MLVSS (mg/l)		43	40	50		54	53	42		106	90	133				
BOD (mg/l)		400	400	295					515	405	315	280				

Table 5 (cont.)

Start-up and Operation of Unit 1 - Pilot Unit 2 - Pilot Unit 3 in Series (November 9 - December 11, 1970)

A = RAW INFLUENT B = UNIT 1 EFFLUENT C = PILOT UNIT 2 EFFLUENT D = PILOT UNIT 3 EFFLUENT

November 16 - 17
Treatment Cycle

November 16	9:00 A.M.				10:00 A.M.				11:00 A.M.				12:00 A.M.		
	A	B	C	D	A	B	C	D	A	B	C	D	A	B	C	D
pH	8.2	7.2	7.1	7.2		7.8	7.3	7.3		7.7	7.5	7.5		7.7	7.4	7.4
Temperature (° C.)	24	20	20	20		19	19	19		20	20	20		20	20	20
					T O C INOPERABLE											
Total COD (mg/l)		900	1660	1560		780	900	1220		800	700	640		760	620	600
MLSS (mg/l)		66	340	234		60	63	91		58	50	50		70	54	52
MLVSS (mg/l)		62	316	217		60	63	89		57	49	49		68	50	48
BOD (mg/l)					IMPROPER DILUTIONS											

	1:00 P.M.			2:00 P.M.			November 17 - 9:00 A.M.				REGENERATION
pH	7.7	7.4	7.4	7.7	7.5	7.3	8.4	7.9	7.8	7.7	11/17 THRU 11/18 - 9:00 A.M. 24 HOURS
Temperature (° C.)	21	21	21	21	21	21	23	21	21	21	
				T O C INOPERABLE							
Total COD (mg/l)	860	640	640	880	660	640		860	740	700	
MLSS (mg/l)	60	50	62	67	51	50		105	72	63	
MLVSS (mg/l)	60	47	51	62	44	47		105	70	63	
BOD (mg/l)				IMPROPER DILUTIONS							

Table 5 (cont.)

Start-up and Operation of Unit 1 - Pilot Unit 2 - Pilot Unit 3 in Series (November 9 - December 11, 1970)

A = RAW INFLUENT B = UNIT 1 EFFLUENT C = PILOT UNIT 2 EFFLUENT D = PILOT UNIT 3 EFFLUENT

November 18 - 19
Treatment Cycle

November 18	9:00 A.M.				10:00 A.M.				11:00 A.M.				12:00 A.M.			
	A	B	C	D	A	B	C	D	A	B	C	D	A	B	C	D
pH	9.1	8.6	7.4	7.2		9.2	8.1	7.7		9.1	8.6	8.2		9.2	8.0	7.6
Temperature (° C.)	31	21	21	21		22	22	22		21	21	21		20	20	20
Total Carbon (mg/l)	955	870	680	425		810	745	555		795	680	560		790	715	695
Inorganic Carbon (mg/l)	90	75	40	40		35	45	60		65	40	50		45	50	25
Total Organic Carbon (mg/l)	865	795	640	385		775	700	495		730	640	510		745	665	670
Total COD (mg/l)										2400	1680	1840		2360	2000	2040
MLSS (mg/l)										192	124	278		215	178	145
MLVSS (mg/l)										160	110	233		177	156	130
BOD (mg/l)	415	345	260	205						340	275	270				

Table 5 (cont.)

Start-up and Operation of Unit 1 - Pilot Unit 2 - Pilot Unit 3 in Series (November 9 - December 11, 1970)

A = RAW INFLUENT B = UNIT 1 EFFLUENT C = PILOT UNIT 2 EFFLUENT D = PILOT UNIT 3 EFFLUENT

November 18	November 18-19 Treatment Cycle								November 19				REGENERATION
	1:00 P.M.				2:00 P.M.				3:00 P.M.				
	A	B	C	D	A	B	C	D	A	B	C	D	
													11/19 THRU 11/20 - 9:00 A.M. - 24 HRS.
pH		8.5	8.4	7.1		8.6	8.2	7.5	10.3	7.2	7.2	6.5	
Temperature (° C.)		21	21	21		20	20	20	25	23	23	23	
Total Carbon (mg/l)		920	830	765		960	870	820	1240	795	710	640	
Inorganic Carbon (mg/l)		55	40	40		65	50	35	55	60	60	50	
Total Organic Carbon (mg/l)		865	790	725		895	820	785	1185	735	650	590	
Total COD (mg/l)		2520	2160	2000		2640	2200	2040	2840	3240	2800	2640	
MLSS (mg/l)		242	154	158		300	182	164	245	446	336	340	
MLVSS (mg/l)		194	134	142		238	158	148	220	400	293	300	
BOD (mg/l)		580	470	430					7650	7650	7650	7650	

Table 5 (cont.)

Start-up and Operation of Unit 1 - Pilot Unit 2 - Pilot Unit 3
in Series (November 9 - December 11, 1970)

A = RAW INFLUENT B = UNIT 1 EFFLUENT C = PILOT UNIT 2 EFFLUENT D = PILOT UNIT 3 EFFLUENT

November 20 - 21
Treatment Cycle

November 20	9:00 A.M.				10:00 A.M.				11:00 A.M.				12:00 A.M.			
	A	B	C	D	A	B	C	D	A	B	C	D	A	B	C	D
pH	9.1	7.1	6.5	6.5		7.3	6.8	6.3		7.3	6.8	6.3		7.2	6.9	6.2
Temperature (° C.)	26	23	23	23		24	24	24		25	25	25		25	25	25
Total Carbon (mg/l)	955	690	680	645		745	645	615		780	710	660		795	705	680
Inorganic Carbon (mg/l)	85	65	75	140		70	75	90		100	95	75		75	80	75
Total Organic Carbon (mg/l)	870	625	605	505		675	570	525		680	615	585		720	625	605
Total COD (mg/l)	2827	2747	2673	1840		2853	2587	3040		2773	2587	2427		2773	2640	2347
MLSS (mg/l)	355	444	479	304		564	381	338		517	381	336		500	433	321
MLVSS (mg/l)	310	389	400	271		491	356	321		433	329	314		431	393	283

Table 5 (cont.)

Start-up and Operation of Unit 1 - Pilot Unit 2 - Pilot Unit 3
in Series (November 9 - December 11, 1970)

A = RAW INFLUENT B = UNIT 1 EFFLUENT C = PILOT UNIT 2 EFFLUENT D = PILOT UNIT 3 EFFLUENT

November 20 - 21
Treatment Cycle

November 20	1:00 P.M.			2:00 P.M.			November 21 9:00 A.M.				
	A	B	C	D	A	B	C	D	A	B	C	D	REGENERATION
pH		7.4	6.8	6.2		7.4	6.8	6.2					11/20 - 3:00 P.M. THRU 11/23 - 9:00 A.M. 66 HOURS
Temperature (°C.)		25	25	25		25	25	25					
Total Carbon (mg/l)		815	810	755		900	760	710					
Inorganic Carbon (mg/l)		85	90	60		100	95	75					
Total Organic Carbon (mg/l)		730	720	695		800	665	635					
Total COD (mg/l)		3067	2720	2453		3040	2853	2667					
MLSS (mg/l)		545	378	300		592	427	389					
MLVSS (mg/l)		491	367	291		508	367	347					

Table 5 (cont.)

Start-up and Operation of Unit 1 - Pilot Unit 2 - Pilot Unit 3 in Series (November 9 - December 11, 1970)

A = RAW INFLUENT B = UNIT 1 EFFLUENT C = PILOT UNIT 2 EFFLUENT D = PILOT UNIT 3 EFFLUENT

November 23 - 24
Treatment Cycle

November 23	9:00 A.M.				10:00 A.M.				11:00 A.M.				12:00 A.M.			
	A	B	C	D	A	B	C	D	A	B	C	D	A	B	C	D
pH	7.1	7.2	6.9	6.6		7.4	7.0	6.8		7.5	7.1	6.9		7.5	7.0	6.7
Temperature (° C.)	16	18	18	18		18	18	18		19	19	19		20	20	20
Total Carbon (mg/l)	150	160	360	410		180	180	175		190	180	175		210	145	115
Inorganic Carbon (mg/l)	35	85	100	100		45	55	55		40	40	45		35	40	40
Total Organic Carbon (mg/l)	115	75	260	310		135	125	120		150	140	130		175	105	75
Total COD (mg/l)	507	600	1360	2000		560	560	520		620	600	500		1000	800	620
MLSS (mg/l)	35	81	104	554		85	60	49		82	70	37		92	76	49
MLVSS (mg/l)	29	80	86	445		83	56	43		78	64	35		88	72	47
BOD (mg/l)	>55	>150	>150	91						89	105	91				

Table 5 (cont.)

Start-up and Operation of Unit 1 - Pilot Unit 2 - Pilot Unit 3 in Series (November 9 - December 11, 1970)

A = RAW INFLUENT B = UNIT 1 EFFLUENT C = PILOT UNIT 2 EFFLUENT D = PILOT UNIT 3 EFFLUENT

November 23 - 24
Treatment Cycle

November 23	1:00 P.M.			2:00 P.M.			November 24 9:00 A.M.				
	A	B	C	D	A	B	C	D	A	B	C	D	REGENERATION
													11/24 thru 11/25 - 9:00 A.M. 24 Hou
pH		7.5	7.2	6.8		7.7	7.1	6.8	7.9	7.3	7.0	6.8	
Temperature (° C.)		20	20	20		21	21	21	20	18	18	18	
Total Carbon (mg/l)		375	305	285		480	425	380	565	480	455	455	
Inorganic Carbon (mg/l)		40	35	45		40	40	40	75	60	70	55	
Total Organic Carbon (mg/l)		335	270	240		440	385	340	490	420	385	400	
Total COD (mg/l)		1280	1180	940		1660	1520	1320		2240	1960	2320	
MLSS (mg/l)		123	88	52		146	116	66		359	221	580	
MLVSS (mg/l)		120	86	48		134	108	62		335	204	480	
BOD (mg/l)		185	148	118					710	660	240	380	

Table 5 (cont.)

Start-up and Operation of Unit 1 - Pilot Unit 2 - Pilot Unit 3 in Series (November 9 - December 11, 1970)

A = RAW INFLUENT B = UNIT 1 EFFLUENT C = PILOT UNIT 2 EFFLUENT D = PILOT UNIT 3 EFFLUENT

November 25 - 26
Treatment Cycle

November 25	9:00 A.M.				10:00 A.M.				11:00 A.M.				12:00 A.M.			
	A	B	C	D	A	B	C	D	A	B	C	D	A	B	C	D
pH	7.5	7.4	6.8	6.8		7.0	7.1	6.8		7.5	7.2	7.0		7.5	7.3	7.2
Temperature (° C.)	19	18	18	18		18	18	18		20	20	20		20	20	20
Total Carbon (mg/l)	530	540	495	500		510	520	530		480	490	500		485	470	455
Inorganic Carbon (mg/l)	50	90	120	80		75	85	85		70	65	70		60	70	70
Total Organic Carbon (mg/l)	480	450	375	420		435	435	445		410	425	430		425	400	385
Total COD (mg/l)	720	2267	1947	1813		2053	1867	1973		1813	1813	1920		1543	1573	1573
MLSS (mg/l)	43	332	281	260		400	235	344		253	204	353		267	204	220
MLVSS (mg/l)	34	321	267	240		392	235	311		253	200	347		239	185	204
BOD (mg/l)	280	220	200	210						260	220	170				

Table 5 (cont.)

Start-up and Operation of Unit 1 - Pilot Unit 2 - Pilot Unit 3
in Series (November 9 - December 11, 1970)

A = RAW INFLUENT B = UNIT 1 EFFLUENT C = PILOT UNIT 2 EFFLUENT D = PILOT UNIT 3 EFFLUENT

November 25 - 26
Treatment Cycle

November 25	1:00 P.M.			2:00 P.M.			November 26 9:00 A.M.				REGENERATION
	A	B	C	D	A	B	C	D	A	B	C	D	
													11/26 thru 11/27 - 9:00 A.M. - 24 Hour
pH		7.6	7.3	7.0		7.7	7.4	6.9	8.5	7.2	7.5	7.1	
Temperature (°C.)		20	20	20		21	21	21	24	19	18	18	
Total Carbon (mg/l)		580	500	480		690	610	595	550	480	480	450	
Inorganic Carbon (mg/l)		65	65	65		70	85	65	60	65	75	70	
Total Organic Carbon (mg/l)		515	435	415		620	525	530	490	415	405	380	
Total COD (mg/l)		1947	1653	1547		2267	1947	1840					
MLSS (mg/l)		229	193	154		274	200	172					
MLVSS (mg/l)		219	177	149		247	175	156					
BOD (mg/l)		340	270	270					690	475	220	215	

Table 5 (cont.)

Start-up and Operation of Unit 1 - Pilot Unit 2 - Pilot Unit 3 in Series (November 9 - December 11, 1970)

A = RAW INFLUENT B = UNIT 1 EFFLUENT C = PILOT UNIT 2 EFFLUENT D = PILOT UNIT 3 EFFLUENT

November 27
Treatment Cycle

November 27	9:00 A.M.				10:00 A.M.				11:00 A.M.				12:00 A.M.			
	A	B	C	D	A	B	C	D	A	B	C	D	A	B	C	D
pH	6.1	7.4	7.1	6.7		7.2	7.0	6.7		7.3	7.1	6.9		7.3	7.2	6.8
Temperature (° C.)	19	19	19	19		19	19	19		20	20	20		22	22	22
Total Carbon (mg/l)	890	530	525	520		565	570	535		580	565	550		530	540	500
Inorganic Carbon (mg/l)	35	70	75	75		75	80	90		85	85	80		70	85	75
Total Organic Carbon (mg/l)	855	460	450	445		490	490	445		495	480	470		460	455	425
Total COD (mg/l)	3550	1733	1573	1413		1867	1547	1440		1653	1653	1600		1680	1493	1360
MLSS (mg/l)	1243	181	193	176		220	142	163		220	142	137		190	132	131
MLVSS (mg/l)	1300	180	192	152		220	139	160		218	142	133		188	132	131
BOD (mg/l)	540	470	410	365						450	450	395				

Table 5 (cont.)

Start-up and Operation of Unit 1 - Pilot Unit 2 - Pilot Unit 3 in Series (November 9 - December 11, 1970)

November 27
Treatment Cycle

November 27	1:00 P.M. A	B	C	D	2:00 P.M. A	B	C	D	REGENERATION
									11/27 thru 11/30 - 9:00 A.M. - 72 Hours
pH		7.4	7.3	6.8		7.3	7.1	6.9	
Temperature (° C.)		23	23	23		23	23	23	
Total Carbon (mg/l)		555	540	530		600	565	555	
Inorganic Carbon (mg/l)		85	85	85		85	80	85	
Total Organic Carbon (mg/l)		470	455	445		515	485	470	
Total COD (mg/l)		1547	1467	1413		1680	1493	1440	
MLSS (mg/l)		176	148	125		150	136	119	
MLVSS (mg/l)		153	148	119		150	136	119	
BOD (mg/l)		390	400	370					

Table 5 (cont.)

Start-up and Operation of Unit 1 - Pilot Unit 2 - Pilot Unit 3
in Series (November 9 - December 11, 1970)

A = RAW INFLUENT B = UNIT 1 EFFLUENT C = PILOT UNIT 2 EFFLUENT D = PILOT UNIT 3 EFFLUENT

November 30 - December 1 *
Treatment Cycle

November 30	9:00 A.M.				10:00 A.M.				11:00 A.M.				12:00 A.M.			
	A	B	C	D	A	B	C	D	A	B	C	D	A	B	C	D
* Start of 1.0 gpm/ft^2																
pH	7.3	7.3	6.6	6.8		7.5	6.9	6.9		7.5	7.1	7.0		7.6	7.3	7.1
Temperature (° C.)	17	17	17	17		19	19	19		21	21	21		22	22	22
Total Carbon (mg/l)	170	220	390	415		195	275	295		270	275	260		190	185	180
Inorganic Carbon (mg/l)	25	45	90	100		55	85	100		55	60	55		40	75	50
Total Organic Carbon (mg/l)	145	175	300	315		140	190	195		215	215	205		150	110	130
Total COD (mg/l)	200	720	1232	1360		420	752	736		380	464	352		440	416	416
MLSS (mg/l)	98	102	217	281		76	88	112		58	60	62		80	42	50
MLVSS (mg/l)	92	100	217	238		74	74	100		58	57	58		70	42	50
BOD (mg/l)	540	470	410	365						450	450	395				

Table 5 (cont.)

Start-up and Operation of Unit 1 - Pilot Unit 2 - Pilot Unit 3
in Series (November 9 - December 11, 1970)

A = RAW INFLUENT B = UNIT 1 EFFLUENT C = PILOT UNIT 2 EFFLUENT D = PILOT UNIT 3 EFFLUENT

November 30 - December 1 *
Treatment Cycle

November 30	1:00 P.M.				2:00 P.M.				December 1 9:00 A.M.				REGENERATION
	A	B	C	D	A	B	C	D	A	B	C	D	
* Start of 1.0 gpm/ft^2													12/1 thru 12/2 - 9:00 A.M. - 24 hours
pH		7.5	7.2	7.0		8.0	7.2	7.1	7.5	7.5	7.3	7.1	
Temperature (°C.)		22	22	22		23	23	23	21	19	19	19	
Total Carbon (mg/l)		190	175	165		220	180	185	275	240	220	220	
Inorganic Carbon (mg/l)		45	50	40		40	45	45	60	55	50	45	
Total Organic Carbon (mg/l)		145	125	125		180	135	140	215	185	170	175	
Total COD (mg/l)		480	448	512		600	480	448		520	460	500	
MLSS (mg/l)		83	46	56		76	58	54		68	60	58	
MLVSS (mg/l)		70	45	52		66	56	46		62	60	55	
BOD (mg/l)		390	400	370					200	210	120	115	

Table 5 (cont.)

Start-up and Operation of Unit 1 - Pilot Unit 2 - Pilot Unit 3 in Series (November 9 - December 11, 1970)

A = RAW INFLUENT B = UNIT 1 EFFLUENT C = PILOT UNIT 2 EFFLUENT D = PILOT UNIT 3 EFFLUENT

December 2 - 3
Treatment Cycle

December 2	9:00 A.M.				10:00 A.M.				11:00 A.M.				12:00 A.M.			
	A	B	C	D	A	B	C	D	A	B	C	D	A	B	C	D
pH	11.0	9.8	8.4	7.3		9.8	9.5	8.8		10.1	9.5	8.9		9.9	9.6	8.9
Temperature (° C.)	22	19	19	19		22	22	22		22	22	22		23	23	23
Total Carbon (mg/l)	965	665	490	440		740	690	670		720	700	665		760	700	680
Inorganic Carbon (mg/l)	80	60	80	70		65	70	80		60	70	80		55	65	85
Total Organic Carbon (mg/l)	885	605	410	370		675	620	590		660	630	585		705	635	595
Total COD (mg/l)	3227	1920	1653	1040		2133	1867	1813		2880	2000	1920		2400	2027	2133
MLSS (mg/l)	268	161	141	132		209	132	129		181	104	120		210	137	118
MLVSS (mg/l)	167	139	122	118		205	108	112		163	96	108		185	114	100
BOD (mg/l)	540	470	440	310						540	520	560				

Table 5 (cont.)

Start-up and Operation of Unit 1 - Pilot Unit 2 - Pilot Unit 3 in Series (November 9 - December 11, 1970)

A = RAW INFLUENT B = UNIT 1 EFFLUENT C = PILOT UNIT 2 EFFLUENT D = PILOT UNIT 3 EFFLUENT

December 2 - 3
Treatment Cycle

December 2	1:00 P.M.			2:00 P.M.			December 3 9:00 A.M.			REGENERATION
	A	B	C	D	A	B	C	D	A	B	C	D	
													12/3 thru 12/4 - 9:00 A.M. - 24 Hrs.
pH		9.9	9.4	8.7		9.7	9.1	7.9	8.7	7.6	7.3	6.7	
Temperature (° C.)		24	24	24		24	24	24	23	21	21	21	
Total Carbon (mg/l)		780	755	725		695	680	665		690	655	615	
Inorganic Carbon (mg/l)		55	70	75		50	55	55		80	80	110	
Total Organic Carbon (mg/l)		725	685	650		645	625	610		610	575	505	
Total COD (mg/l)		2460	2240	2453		2133	2107	2080		2507	2107	2000	
MLSS (mg/l)		318	144	145		236	150	137		412	300	205	
MLVSS (mg/l)		227	100	113		173	112	105		358	245	167	
BOD (mg/l)		580	570	520					580	550	540	425	

Table 5 (cont.)

Start-up and Operation of Unit 1 - Pilot Unit 2 - Pilot Unit 3
in Series (November 9 - December 11, 1970)

A = RAW INFLUENT B = UNIT 1 EFFLUENT C = PILOT UNIT 2 EFFLUENT D = PILOT UNIT 3 EFFLUENT

December 4
Treatment Cycle

December 4	9:00 A.M.				10:00 A.M.				11:00 A.M.				12:00 A.M.		
	A	B	C	D	A	B	C	D	A	B	C	D	A	B	C	D
pH	8.1	7.2	6.9	6.9		7.2	7.1	7.0		6.9	6.8	6.8		6.7	6.7	6.
Temperature (° C.)	23°	24	24	24		24	24	24		24	24	24		25	25	25
Total Carbon (mg/l)	735	695	660	680		730	705	695		620	630	595		675	650	645
Inorganic Carbon(mg/l)	60	80	75	95		75	95	75		70	65	65		65	65	65
Total Organic Carbon (mg/l)	675	615	585	585		655	610	620		550	565	530		610	585	58
Total COD (mg/l)	2387	2520	2307	2280		2733	2333	2440		2333	2307	2227		2253	2093	206
MLSS (mg/l)	164	300	272	1177		720	272	244		295	231	213		368	238	14
MLVSS (mg/l)	138	265	236	1123		647	224	213		260	203	180		316	200	16

Table 5 (cont.)

Start-up and Operation of Unit 1 - Pilot Unit 2 - Pilot Unit 3 in Series (November 9 - December 11, 1970)

A = RAW INFLUENT B = UNIT 1 EFFLUENT C = PILOT UNIT 2 EFFLUENT D = PILOT UNIT 3 EFFLUENT

December 4
Treatment Cycle

December 4	1:00 P. M.			2:00 P. M.			REGENERATION
	A	B	C	D	A	B	C	D	
									12/4 thru 12/7 - 9:00 A. M. - 72 Hrs.
pH		6.5	6.6	6.4		7.1	6.9	6.7	
Temperature (° C.)		24	24	24		24	24	24	
Total Carbon (mg/l)		625	630	630		605	600	575	
Inorganic Carbon (mg/l)		55	50	65		70	55	75	
Total Organic Carbon (mg/l)		570	580	565		535	545	500	
Total COD (mg/l)		2200	2147	2120		2013	2013	1880	
MLSS (mg/l)		315	288	263		204	233	188	
MLVSS (mg/l)		290	268	230		176	210	168	

Table 5 (cont.)

Start-up and Operation of Unit 1 - Pilot Unit 2 - Pilot Unit 3 in Series (November 9 - December 11, 1970)

A = RAW INFLUENT B = UNIT 1 EFFLUENT C = PILOT UNIT 2 EFFLUENT D = PILOT UNIT 3 EFFLUENT

December 7 - 8
Treatment Cycle

December 7	9:00 A.M.				10:00 A.M.				11:00 A.M.				12:00 A.M.			
	A	B	C	D	A	B	C	D	A	B	C	D	A	B	C	D
pH	6.8	7.5	7.1	6.9		7.3	7.2	7.2		7.3	7.3	7.2		7.2	7.2	7.1
Temperature (° C.)	17	18	18	18		18	18	18		21	21	21		21	21	21
Total Carbon (mg/l)	350	350	405	450		390	375	370		400	395	400		405	395	395
Inorganic Carbon (mg/l)	55	75	100	105		75	80	95		70	75	85		60	70	65
Total Organic Carbon (mg/l)	295	275	305	345		315	295	275		330	320	315		345	325	330
Total COD (mg/l)	2650	1170	1250	1310		1270	1070	1010		1270	1090	1010		1290	1230	1190
MLSS (mg/l)	6850	180	167	171		342	191	150		241	173	152		294	176	180
MLVSS (mg/l)	5700	152	130	132		242	126	107		171	135	117		224	128	124

Table 5 (cont.)

Start-up and Operation of Unit 1 - Pilot Unit 2 - Pilot Unit 3 in Series (November 9 - December 11, 1970)

A = RAW INFLUENT B = UNIT 1 EFFLUENT C = PILOT UNIT 2 EFFLUENT D = PILOT UNIT 3 EFFLUENT

December 7 - 8
Treatment Cycle

December 7	1:00 P.M.			2:00 P.M.			December 8 9:00 A.M.			REGENERATION
	A	B	C	D	A	B	C	D	A	B	C	D	
													12/8 thru 12/9 - A.M. - 24 Hrs.
pH		7.4	7.4	7.2		7.9	7.4	7.1	7.9	7.4	7.6	7.5	
Temperature (° C.)		23	23	23		23	23	23	19	18	18	18	
Total Carbon (mg/l)		490	460	435		570	520	490	655	525	510	520	
Inorganic Carbon (mg/l)		70	60	70		55	70	60	60	65	60	70	
Total Organic Carbon (mg/l)		420	400	365		515	450	430	595	400	450	450	
Total COD (mg/l)		1490	1390	1250		1810	1670	1510		1747	1587	1747	
MLSS (mg/l)		118	180	84		118	158	159		268	172	300	
MLVSS (mg/l)		95	86	66		86	122	118		245	172	253	

Table 5 (cont.)

Start-up and Operation of Unit 1 - Pilot Unit 2 - Pilot Unit 3 in Series (November 9 - December 11, 1970)

A = RAW INFLUENT B = UNIT 1 EFFLUENT C = PILOT UNIT 2 EFFLUENT D = PILOT UNIT 3 EFFLUENT

December 9 - 10
Treatment Cycle

December 9	9:00 A.M.				10:00 A.M.				11:00 A.M.				12:00 A.M.		
	A	B	C	D	A	B	C	D	A	B	C	D	A	B	C	D
Total COD (mg/l)	1533	1773	1827	1773		1827	1720	1853		1560	1507	1507		1427	1347	134
MLSS (mg/l)	102	230	190	208		319	200	238		177	140	147		158	118	11
MLVSS (mg/l)	72	215	180	200		275	189	238		168	117	145		129	98	10

	1:00 P.M.				2:00 P.M.				December 10 9:00 A.M.			
	A	B	C	D	A	B	C	D	A	B	C	D
Total COD (mg/l)		1480	1347	1293		1400	1373	1427		1107	1107	1160
MLSS (mg/l)		118	96	90		134	112	256		128	134	83
MLVSS (mg/l)		108	90	82		85	87	105		125	103	76

REGENERATION

2/10 thru 2/11 - 9:00 A.M. - 24 Hrs.

Table 5 (cont.)

Start-up and Operation of Unit 1 - Pilot Unit 2 - Pilot Unit 3 Effluent in Series (November 9 - December 11, 1970)

A = RAW INFLUENT B = UNIT 1 EFFLUENT C = PILOT UNIT 2 EFFLUENT D = PILOT UNIT 3 EFFLUENT

December 11
Treatment Cycle

December 11	9:00 A.M.				10:00 A.M.				11:00 A.M.				12:00 A.M.			
	A	B	C	D	A	B	C	D	A	B	C	D	A	B	C	D
Total COD (mg/l)	2080	1320	1260	1140		1440	1280	1280		1780	1540	1340		2020	1660	1640
MLSS (mg/l)	96	200	138	142		274	232	263		284	187	170		265	156	156
MLVSS (mg/l)	76	170	110	130		216	159	226		226	155	152		195	122	144

	1:00 P.M.				2:00 P.M.			
	A	B	C	D	A	B	C	D
Total COD (mg/l)		2060	1920	1760		2020	1900	1860
MLSS (mg/l)		204	197	163		239	162	158
MLVSS (mg/l)		146	147	150		170	131	139

Table 6

Operation of Unit 2 (February 3 - April 27, 1971)

Carbon Adsorption - Anaerobic Regeneration

A = RAW EFFLUENT COMPOSITE B = UNIT 1 EFFLUENT COMPOSITE C = UNIT 2 EFFLUENT COMPOSITE

February 3 Treatment Cycle

	10:00 A.M.			11:30 A.M.			1:00 P.M.			2:30 P.M.		
	A	B	C	A	B	C	A	B	C	A	B	C
flow (gal treated)	25,460											
pH	9.5	6.6	7.2	7.2	6.5	6.8	9.6	6.8	6.3	10.2	7.2	6.4
Total Carbon (mg/l)	930	780	460	630	770	505	1400	910	500	1430	1340	540
Inorganic Carbon (mg/l)	45	55	85	45	50	60	68	55	50	78	77	58
Total Organic Carbon (mg/l)	885	725	375	585	720	445	1332	855	450	1352	1263	482

February 5 Treatment Cycle

flow (gal treated)	16,620											
pH	8.6	6.8	6.5	8.2	6.4	6.2	11.0	7.8	6.3	11.1	9.5	6.8
Total Carbon (mg /l)	920	815	415	1160	745	520	1510	850	595	1580	1240	665
Inorganic Carbon (mg/l)	52	51	85	50	50	78	45	45	55	55	60	52
Total Organic Carbon (mg/l)	868	764	330	1140	695	442	1465	805	540	1525	1180	613

Table 6 (continued)

Operation of Unit 2 (February 3 - April 27, 1971)

Carbon Adsorption - Anaerobic Regeneration

A = RAW EFFLUENT COMPOSITE B = UNIT 1 EFFLUENT COMPOSITE C = UNIT 2 EFFLUENT COMPOSITE

February 8 Treatment Cycle

	10:00 A.M.			11:30 A.M.			1:00 P.M.			2:30 P.M.		
	A	B	C	A	B	C	A	B	C	A	B	C
flow (gal treated)	27,360											
pH	6.1	6.3	6.2	6.7	6.9	6.4	7.3	7.3	7.1	7.3	7.3	7.0
Total Carbon (mg/l)	805	740	580	495	575	540	755	580	542	1000	625	525
Inorganic Carbon (mg/l)	78	85	75	38	70	65	30	58	68	35	65	68
Total Organic Carbon (mg/l)	727	655	505	457	505	475	725	522	474	965	560	457

February 10 Treatment Cycle

flow (gal treated)	34,800											
pH	10.1	9.4	6.9	9.9	9.4	7.2	9.2	8.6	7.0	10.3	8.7	7.3
Total Carbon (mg/l)	1140	920	720	960	960	825	638	915	770	1000	880	742
Inorganic Carbon (mg/l)	88	92	72	78	100	90	45	95	102	45	78	88
Total Organic Carbon(mg/l)	1052	828	648	882	860	735	593	820	668	955	802	654

Table 6 (continued)

Operation of Unit 2 (February 3 - April 27, 1971)

Carbon Adsorption - Anaerobic Regeneration

A = RAW EFFLUENT COMPOSITE B = UNIT 1 EFFLUENT COMPOSITE C = UNIT 2 EFFLUENT COMPOSITE

February 12 Treatment Cycle

	10:00 A.M.			11:30 A.M.			1:00 P.M.			2:30 P.M.		
	A	B	C	A	B	C	A	B	C	A	B	C
flow (gal treated)	32,340											
pH	10.1	8.5	6.9	9.7	7.8	6.6	8.7	7.2	6.6	9.3	7.8	6.3
Total Carbon (mg/l)	852	835	730	685	912	788	845	910	838	940	860	785
Inorganic Carbon (mg/l)	50	45	58	48	50	55	32	45	50	45	50	50
Total Organic Carbon (mg/l)	802	790	672	637	862	733	813	865	788	895	810	735

February 15 Treatment Cycle

flow (gal treated)	28,960											
pH	6.8	6.6	6.3	6.4	6.3	6.5	6.5	6.7	6.6	6.7	6.8	6.8
Total Carbon (mg/l)	485	585	575	390	525	475	444	535	462	930	510	451
Inorganic Carbon (mg/l)	38	80	82	40	78	72	42	65	65	40	65	55
Total Organic Carbon (mg/l)	447	505	493	350	447	403	402	470	397	890	455	396

Table 6 (continued)

Operation of Unit 2 (February 3 - April 27, 1971)

Carbon Adsorption - Anaerobic Regeneration

A = RAW EFFLUENT COMPOSITE B = UNIT 1 EFFLUENT COMPOSITE C = UNIT 2 EFFLUENT COMPOSITE

February 17 Treatment Cycle

	10:00 A.M.			11:30 A.M.			1:00 P.M.			2:30 P.M.		
	A	B	C	A	B	C	A	B	C	A	B	C
flow (gal treated)	34,750											
pH	10.7	8.9	6.4	10.5	9.4	7.6	9.7	9.2	7.7	10.9	8.7	7.8
Total Carbon (mg/l)	942	632	545	998	858	730	788	912	821	775	875	770
Inorganic Carbon (mg/l)	50	68	60	48	71	65	70	88	85	92	85	88
Total Organic Carbon (mg/l)	892	564	485	950	787	665	718	824	736	683	790	692
Total COD (mg/l)	3663	2672	2198	3620	2845	2543	2190	2715	2457	2025	2801	2758
Dissolved COD (mg/l)	3233	2025	1939	3146	2543	1939	2155	1939	2198	1853	2241	2285
MLSS (mg/l)	213	750	295	343	590	400		566	270	285	576	450
MLVSS (mg/l)	153	320	180	66	250	66		520	230	150	459	380

Table 6 (continued)

Operation Of Unit 2 (February 3 - April 27, 1971)

Carbon Adsorption - Anaerobic Regeneration

A = RAW EFFLUENT COMPOSITE B = UNIT 1 EFFLUENT COMPOSITE C = UNIT 2 EFFLUENT COMPOSITE

February 19 Treatment Cycle

	10:00 A.M.			11:30 A.M.			1:00 P.M.			2:30 P.M.		
	A	B	C	A	B	C	A	B	C	A	B	C
flow (gal treated)	28,860											
pH	8.0	8.0	7.1	9.1	8.4	7.2	9.4	8.7	7.5	8.5	8.4	7.8
Total Carbon (mg/l)	760	785	595	845	775	580	812	812	590	945	815	585
Inorganic Carbon (mg/l)	72	55	70	62	55	52	55	50	105	55	70	55
Total Organic Carbon (mg/l)	688	730	525	783	720	528	757	762	485	890	745	530
Total COD (mg/l)	3517	2839	2161	3940	3093	1610	3262	3389	1907	3305	2881	2161
Dissolved COD (mg/l)	2669	2669	1822	3051	2627	1695	2457	2330	1652	3220	2288	2118
MLSS (mg/l)							180	265	125	205	225	135
MLVSS (mg/l)							130	185	95	125	165	105

Table 6 (continued)

Operation of Unit 2 (February 3 - April 27, 1971)

Carbon Adsorption - Anaerobic Regeneration

A = RAW EFFLUENT COMPOSITE B = UNIT 1 EFFLUENT COMPOSITE C = UNIT 2 EFFLUENT COMPOSITE

February 22 Treatment Cycle

	10:00 A.M.			11:30 A.M.			1:00 P.M.			2:30 P.M.		
	A	B	C	A	B	C	A	B	C	A	B	C
flow (gal treated)	23,770											
pH	8.5	8.1	7.2	9.1	8.2	7.4	8.7	8.3	7.1	9.7	8.6	7.5
Total Carbon (mg/l)	685	685	660	520	545	475	1420	580	445	1550	795	480
Inorganic Carbon (mg/l)	60	65	170	45	71	85	60	70	85	65	80	85
Total Organic Carbon (mg/l)	625	620	490	475	474	390	1360	510	360	1485	715	395
Total COD (mg/l)	2193	2500	2193	1491	2061	1623	4605	1842	1272	4210	1886	1052
Dissolved COD (mg/l)	1885	2149	1710	1228	1228	921	4166	1535	614	4166	1491	921
MLSS (mg/l)	390	380	360	405	740	257						
MLVSS (mg/l)	270	365	290	270	500	190						

February 24 Treatment Cycle

flow (gal treated)	31,260								
pH	6.8	6.7	7.1	7.1	7.3	7.2	6.8	7.1	7.0
Total COD (mg/l)	1509	2112	2112	1724	1983	1897	1638	2069	1595
Dissolved COD (mg/l)	1509	1897	1638	1509	1767	1336	1595	1509	1379
MLSS (mg/l)	62	268	165	116	290	190	104	300	223
MLVSS (mg/l)	28	188	108	56	190	123	62	227	163

Table 6 (continued)

Operation of Unit 2 (February 3 - April 27, 1971)

Carbon Adsorption - Anaerobic Regeneration

A = RAW EFFLUENT COMPOSITE B = UNIT 1 EFFLUENT COMPOSITE C = UNIT 2 EFFLUENT COMPOSITE

February 26 Treatment Cycle

	10:00 A.M.			11:30 A.M.			1:00 P.M.			2:30 P.M.		
	A	B	C	A	B	C	A	B	C	A	B	C
flow (gal treated)	22,000											
pH	6.8	7.2	6.6	6.9	6.8	6.6	7.1	7.5	6.7			
Total Carbon (mg/l)	525	610	470	502	618	446	490	605	440			
Inorganic Carbon (mg/l)	35	70	78	35	75	75	35	65	65			
Total Organic Carbon (mg/l)	490	540	392	467	545	371	455	535	375			
Total COD (mg/l)	1795	2179	1581	1538	2237	1316	1316	1974	1228			
Dissolved COD (mg/l)	1581	1795	1197	1496	1579	1009	1316	1491	1009			
MLSS (mg/l)	43	715	184	50	270	202	57	357	146			
MLVSS (mg/l)	37	505	164	42	230	162	53	260	138			

Table 6 (continued)

Operation of Unit 2 (February 3 - April 27, 1971)

Carbon Adsorption - Anaerobic Regeneration

A = RAW EFFLUENT COMPOSITE B = UNIT 1 EFFLUENT COMPOSITE C = UNIT 2 EFFLUENT COMPOSITE

March 1 Treatment Cycle

	10:00 A.M.			11:30 A.M.			1:00 P.M.			2:30 P.M.		
	A	B	C	A	B	C	A	B	C	A	B	C
flow (gal treated)	32,500											
pH	6.7	6.8	7.0	6.9	7.1	7.0	6.9	7.2	7.1	7.1	7.6	7.1
Total Carbon (mg/l)	510	585	590	480	555	430	480	525	420	845	542	395
Inorganic Carbon (mg/l)	35	70	165	28	58	95	35	62	80	38	50	65
Total Organic Carbon (mg/l)	475	515	425	452	497	335	445	463	340	807	492	330
Total COD (mg/l)	2161	1822	1610	2712	1653	1140	1949	1652	1059	3008	1907	1356
Dissolved COD (mg/l)	1144	1483	1101	1356	1398	1017	1314	1483	890	2754	1398	932
MLSS (mg/l)	295	185	317	636	152	75	333	300	152	105	285	165
MLVSS (mg/l)	182	155	237	412	120	55	233	173	108	100	195	107

Table 6 (continued)

Operation of Unit 2 (February 3 - April 27, 1971)

Carbon Adsorption - Anaerobic Regeneration

A = RAW EFFLUENT COMPOSITE B = UNIT 1 EFFLUENT COMPOSITE C = UNIT 2 EFFLUENT COMPOSITE

March 3 Treatment Cycle

	10:00 A.M.			11:30 A.M.			1:00 P.M.			2:30 P.M.		
	A	B	C	A	B	C	A	B	C	A	B	C
flow (gal treated)	34,270											
pH	6.5	6.7	6.1	9.4	7.6	6.3	8.4	7.8	6.0	8.2	7.2	5.7
Total Carbon (mg/l)	890	590	425	970	705	500	1250	745	538	1610	804	565
Inorganic Carbon (mg/l)	45	42	68	42	45	45	40	45	45	42	48	48
Total Organic Carbon (mg/l)	845	548	357	928	660	455	1210	700	493	1668	756	517
Total COD (mg/l)	3559	1949	1314	3475	2542	1610	4449	1991	1864	4999	2712	2161
Dissolved COD (mg/l)	3263	1907	1229	3263	2161	1525	3729	1907	1483	4746	2500	1780
MLSS (mg/l)	202	76	27	232	87	40	352	98	60	366	122	78
MLVSS (mg/l)	180	76	8	195	80	20	297	90	50	302	118	76

Table 6 (continued)

Operation of Unit 2 (February 3 - April 27, 1971)

Carbon Adsorption - Anaerobic Regeneration

A = RAW EFFLUENT COMPOSITE B = UNIT 1 EFFLUENT COMPOSITE C = UNIT 2 EFFLUENT COMPOSITE

March 5 Treatment Cycle

	10:00 A.M.			11:30 A.M.			1:00 P.M.			2:30 P.M.		
	A	B	C	A	B	C	A	B	C	A	B	C
flow (gal treated)	33,154											
pH	7.1	7.2	6.8	8.2	7.6	6.8	6.7	7.1	6.9	6.9	7.2	6.8
Total Carbon (mg/l)	705	745	465	660	685	650	470	685	570	580	640	535
Inorganic Carbon (mg/l)	55	78	60	50	75	118	45	70	112	42	80	80
Total Organic Carbon (mg/l)	650	667	405	610	610	532	425	615	458	538	560	455
Total COD (mg/l)	2179	2564	1880	2009	2521	2393	1538	2222	2436	2094	2393	2094
Dissolved COD (mg/l)	2009	2179	1410	1752	-	-	-	-	-	-	-	-
MLSS (mg/l)	130	312	198	240	227	148	74	220	212	108	200	135
MLVSS (mg/l)	98	272	182	163	167	138	68	178	170	82	185	130

Table 6 (continued)

Operation of Unit 2 (February 3 - April 27, 1971)

Carbon Adsorption - Anaerobic Regeneration

A = RAW EFFLUENT COMPOSITE B = UNIT 1 EFFLUENT COMPOSITE C = UNIT 2 EFFLUENT COMPOSITE

March 9 Treatment Cycle

	10:00 A.M.			11:30 A.M.			1:00 P.M.			2:30 P.M.		
	A	B	C	A	B	C	A	B	C	A	B	C
flow (gal treated)	22,950											
pH	6.8	6.7	6.6	6.9	7.0	7.1	7.4	7.0	7.0	7.1	7.3	7.2
Total Carbon (mg/l)	595	415	600	725	452	425	605	505	460	665	530	475
Inorganic Carbon (mg/l)	32	55	145	38	53	58	40	52	65	42	55	52
Total Organic Carbon (mg/l)	567	360	455	687	399	367	565	453	395	623	475	423
Total COD (mg/l)	2880	1640	1920	2160	1360	1280	1800	1600	1480	3880	1840	1520
Dissolved COD (mg/l)	1720	1040	1200	1480	1000	1040	1640	1120	1080	1840	1240	1200
MLSS (mg/l)	55	206	350	38	193	104	44	160	160	1110	226	235
MLVSS (mg/l)	28	160	283	31	150	92	39	140	133	895	203	196

Table 6 (continued)

Operation of Unit 2 (February 3 - April 27, 1971)

Carbon Adsorption - Anaerobic Regeneration

A = RAW EFFLUENT COMPOSITE B = UNIT 1 EFFLUENT COMPOSITE C = UNIT 2 EFFLUENT COMPOSITE

March 11 Treatment Cycle

	10:00 A.M.			11:30 A.M.			1:00 P.M.			2:30 P.M.		
	A	B	C	A	B	C	A	B	C	A	B	C
flow (gal treated)	30,720											
pH	7.7	7.4	7.5	7.9	7.7	7.4	7.8	7.7	7.7	8.1	7.9	7.9
Total Carbon (mg/l)	705	595	475	640	670	518	795	665	492	692	650	485
Inorganic Carbon (mg/l)	41	40	48	30	42	32	35	42	42	30	42	47
Total Organic Carbon (mg/l)	664	555	427	610	636	486	760	623	450	662	608	438
Total COD (mg/l)	2282	2184	1602	1990	2184	1602	2573	1893	1699	2184	2087	1505
Dissolved COD (mg/l)	2184	1699	1311	1893	1893	1505	2282	1796	1505	1990	1796	1214
MLSS (mg/l)	102	108	77	61	160	60	209	122	70	168	124	84
MLVSS (mg/l)	58	90	67	47	94	44	157	96	51	98	102	70

Table 6 (continued)

Operation of Unit 2 (February 3 - April 27, 1971)

Carbon Adsorption - Anaerobic Regeneration

A = RAW EFFLUENT COMPOSITE B = UNIT 1 EFFLUENT COMPOSITE C = UNIT 2 EFFLUENT COMPOSITE

March 15 Treatment Cycle

	10:00 A.M.			11:30 A.M.			1:00 P.M.			2:30 P.M.		
	A	B	C	A	B	C	A	B	C	A	B	C
flow (gal treated)	30,020											
pH	Not Applicable											
Total Carbon (mg/l)	665	262	380	760	355	260	998	500	310	1450	680	465
Inorganic Carbon (mg/l)	65	45	98	40	45	45	38	50	50	35	45	58
Total Organic Carbon (mg/l)	600	217	282	720	310	215	960	450	260	1415	635	407
Total COD (mg/l)	2310	925	967	2775	1345	757	3700	1680	883	5000	2310	1512
Dissolved COD (mg/l)	1850	630	841	2145	630	714	2983	840	672	3490	1600	1050
MLSS (mg/l)	238	170	63	726	165	65	224	178	138	883	300	145
MLVSS (mg/l)	222	125	44	654	135	50	191	135	87	834	223	105

Table 6 (continued)

Operation of Unit 2 (February 3 - April 27, 1971)

Carbon Adsorption - Anaerobic Regeneration

A = RAW EFFLUENT COMPOSITE B = UNIT 1 EFFLUENT COMPOSITE C = UNIT 2 EFFLUENT COMPOSITE

March 17 Treatment Cycle

	10:00 A.M.			11:30 A.M.			1:00 P.M.			2:30 P.M.		
	A	B	C	A	B	C	A	B	C	A	B	C
Total COD (mg/l)	3615	3065	1555	3780	2983	1680	2776	3025	1640	3240	3070	1640
Dissolved COD (mg/l)	2983	2310	1260	2182	2650	1388	1835	2562	1300	2690	2355	1470
MLSS (mg/l)	188	405	143	287	316	200	252	264	210	149	300	262
MLVSS (mg/l)	144	328	116	253	268	180	225	246	182	130	260	232

March 18 Treatment Cycle

Total COD (mg/l)	3750	1920	1750	2580	2040	1540
Dissolved COD (mg/l)	3460	1130	1210	2160	1750	1420
MLSS (mg/l)	302	222	134	144	240	190
MLVSS (mg/l)	109	160	99	89	188	140

Table 6 (continued)

Operation of Unit 2 (February 3 - April 27, 1971)

Carbon Adsorption - Anaerobic Regeneration

A = RAW EFFLUENT COMPOSITE B = UNIT 1 EFFLUENT COMPOSITE C = UNIT 2 EFFLUENT COMPOSITE

March 22 Treatment Cycle

	10:00 A.M.			11:30 A.M.			1:00 P.M.			2:30 P.M.		
	A	B	C	A	B	C	A	B	C	A	B	C
flow (gal treated)	29,310											
pH	7.0	7.1	7.0	7.0	6.6	6.1	8.0	6.3	6.2	7.4	6.5	6.3
Total Carbon (mg/l)	910	625	542	880	670	538	735	675	555	640	650	520
Inorganic Carbon (mg/l)	160	120	82	145	150	85	155	115	75	115	100	95
Total Organic Carbon (mg/l)	750	505	460	635	520	453	580	560	480	525	750	425
Total COD (mg/l)	3550	2280	1930	3200	2410	1920	2410	2585	1930	2019	2720	2060
Dissolved COD (mg/l)	2940	1930	1620	2850	2150	1580	2190	2130	1665	1710	2019	1710
MLSS (mg/l)	144	162	82	134	165	120	96	194	82	90	142	126
MLVSS (mg/l)	92	140	67	100	147	91	76	160	64	65	126	116

Table 6 (continued)

Operation of Unit 2 (February 3 - April 27, 1971)

Carbon Adsorption - Anaerobic Regeneration

A = RAW EFFLUENT COMPOSITE B = UNIT 1 EFFLUENT COMPOSITE C = UNIT 2 EFFLUENT COMPOSITE

March 23 Treatment Cycle

	10:00 A.M.			11:30 A.M.			1:00 P.M.			2:30 P.M		
	A	B	C	A	B	C	A	B	C	A	B	C
flow (gal treated)	----------31,120----------											
pH	11.1	7.0	6.1	10.1	7.1	6.3	10.0	7.8	6.7	9.2	8.6	7.0
Total Carbon (mg/l)	985	590	480	705	710	512	845	720	535	825	700	490
Inorganic Carbon (mg/l)	240	185	130	175	200	145	195	195	140	200	170	160
Total Organic Carbon (mg/l)	745	405	350	530	510	367	650	525	395	625	530	330
Total COD (mg/l)	4090	2240	1725	2410	2410	2200	3100	2630	2110	2970	2540	2280
Dissolved COD (mg/l)	3275	1465	1380	1725	1810	1465	2585	2240	1510	2760	2155	1725
MLSS (mg/l)	355	232	278	252	360	377	215	308	394	136	360	374
MLVSS (mg/l)	320	223	338	242	313	343	182	268	374	110	320	333

Table 6 (continued)

Operation of Unit 2 (February 3 - April 27, 1971)

Carbon Adsorption - Anaerobic Regeneration

A = RAW EFFLUENT COMPOSITE B = UNIT 1 EFFLUENT COMPOSITE C = UNIT 2 EFFLUENT COMPOSITE

March 24 Treatment Cycle

	10:00 A.M.			11:30 A.M.			1:00 P.M.			2:30 P M.		
	A	B	C	A	B	C	A	B	C	A	B	C
flow (gal treated)	----------16,240----------											
pH	9.5	6.8	5.9	8.5	7.2	6.1						
Total Carbon (mg/l)	675	670	570	1080	625	550						
Inorganic Carbon (mg/l)	170	145	120	190	160	110						
Total Organic Carbon (mg/l)	505	525	450	890	465	440						
Total COD (mg/l)	2240	2600	2160	3640	2320	2080						
Dissolved COD (mg/l)	1880	1720	1760	3200	1960	1320						

March 26 Treatment Cycle

flow (gal treated)	----------15,310----------											
pH	9.0	7.7	5.8	9.8	7.4	6.2	9.1	8.0	6.5	8.7	7.7	7.0
Total Carbon (mg/l)	770	580	525	840	610	560	810	600	550	820	630	510
Inorganic Carbon (mg/l)	260	200	235	160	145	130	200	190	180	220	210	165
Total Organic Carbon (mg/l)	510	380	290	680	465	430	610	410	370	600	420	345
Total COD (mg/l)	2880	2400	2040	2960	2990	2200	2040	3880	1920	1760	2160	1800
Dissolved COD (mg/l)	2440	1800	1640	2440	1760	1720	1680	1840	1800	1640	1880	1600
MLSS (mg/l)	303	372	240	303	456	184	184	1020	193	197	448	234
MLVSS (mg/l)	280	332	192	292	620	164	168	950	182	185	408	223

Table 6 (continued)

Operation of Unit 2 (February 3 - April 27, 1971)

Carbon Adsorption - Anaerobic Regeneration

A = RAW EFFLUENT COMPOSITE B = UNIT 1 EFFLUENT COMPOSITE C = UNIT 2 EFFLUENT COMPOSITE

March 29 Treatment Cycle

	10:00 A.M.			11:30 A.M.			1:00 P.M.			2:30 P.M.		
	A	B	C	A	B	C	A	B	C	A	B	C
flow (gal treated)	27,330											
pH	7.2	7.2	6.5	9.1	8.1	6.5	10.9	7.3	6.7	9.8	7.2	6.8
Total Carbon (mg/l)	660	550	510	420	565	515	600	520	445	580	540	480
Inorganic Carbon (mg/l)	170	155	135	195	205	165	110	140	155	185	140	155
Total Organic Carbon (mg/l)	490	400	375	225	360	350	490	380	290	395	300	335
Total COD (mg/l)	2615	1730	1385	1385	1920	1650	2420	1650	1690	2460	2065	1770
Dissolved COD (mg/l)	2065	1460	1345	1305	1345	1420	2150	1305	1305	2190	1500	1388
MLSS (mg/l)	237	390	126	81	352	214	80	268	192	98	307	220
MLVSS (mg/l)	233	360	122	73	312	203	73	244	174	85	286	191

Table 6 (continued)

Operation of Unit 2 (February 3 - April 27, 1971)

Carbon Adsorption - Anaerobic Regeneration

A = RAW EFFLUENT COMPOSITE B = UNIT 1 EFFLUENT COMPOSITE C = UNIT 2 EFFLUENT COMPOSITE

March 30 Treatment Cycle

	10:00 A.M.			11:30 A.M.			1:00 P.M.			2:30 P.M		
	A	B	C	A	B	C	A	B	C	A	B	C
flow (gal treated)	22,820											
pH	9.2	6.9	6.1	10.3	7.2	6.2	8.8	7.3	6.7	8.1	7.2	7.0
Total Carbon (mg/l)	740	530	430	600	620	505	805	625	530	720	600	545
Inorganic Carbon (mg/l)	185	140	120	115	150	115	155	160	125	150	145	115
Total Organic Carbon (mg/l)	555	390	310	485	470	390	650	465	405			
Total COD (mg/l)	2500	1540	1115	2000	1775	1540	2610	2380	1500	2610	2230	1535
Dissolved COD (mg/l)	2115	1385	923	1885	1575	1345	2540	1880	1270	2500	2110	1310
MLSS (mg/l)	200	332	123	145	234	183	123	938	160	206	237	202
MLVSS (mg/l)	167	320	116	115	226	177	110	852	131	185	214	180

March 31 Treatment Cycle

flow (gal treated)	13,320					
pH	8.5	6.7	6.0	8.3	7 0	6.2
Total Carbon (mg/l)	670	650	610	720	580	625
Inorganic Carbon (mg/l)	145	145	100	160	150	125
Total Organic Carbon (mg/l)	525	505	510	560	430	500

Table 6 (continued)

Operation of Unit 2 (February 3 - April 27, 1971)

Carbon Adsorption - Anaerobic Regeneration

A = RAW EFFLUENT COMPOSITE B = UNIT 1 EFFLUENT COMPOSITE C = UNIT 2 EFFLUENT COMPOSITE

April 2 Treatment Cycle

	10:00 A.M.			11:30 A.M.			1:00 P.M.			2:30 P.M		
	A	B	C	A	B	C	A	B	C	A	B	C
flow (gal treated)	20,620											
pH	7.2	6.8	7.1	8.7	7.0	5.6	7.4	6.1	5.5	7.2	6.8	6.2
Total Carbon (mg/l)	940	570	450	785	600	455	840	820	600	810	740	525
Inorganic Carbon (mg/l)	165	145	130	180	150	120	155	150	130	160	150	115
Total Organic Carbon (mg/l)	775	425	320	605	450	335	685	670	470	650	590	410
Total COD (mg/l)	3560	1920	1440	3120	2440	1360	2800	2720	1760	2480	2840	2200
Dissolved COD (mg/l)	3120	1440	1200	2600	1880	1240	2640	2160	1600	2160	2120	1640
MLSS (mg/l)	386	425	115	300	403	155	363	440	228	289	420	364
MLVSS (mg/l)	243	285	60	206	280	123	231	317	156	171	310	360

Table 6 (continued)

Operation of Unit 2 (February 3 - April 27, 1971)

Carbon Adsorption - Anaerobic Regeneration

A = RAW EFFLUENT COMPOSITE B = UNIT 1 EFFLUENT COMPOSITE C = UNIT 2 EFFLUENT COMPOSITE

April 6 Treatment Cycle

	10:00 A.M.			11:30 A.M.			1:00 P.M.			2:30 P.M.		
	A	B	C	A	B	C	A	B	C	A	B	C
flow (gal treated)	24,990											
pH	8.7	9.4	5.7	9.3	8.2	6.2	8.7	8.6	5.9	8.9	6.0	8.3
Total Carbon (mg/l)	715	748	605	1280	805	605	1310	900	640	1200	980	700
Inorganic Carbon (mg/l)	182	178	165	208	192	165	245	190	168	212	200	135
Total Organic Carbon (mg/l)	523	570	440	1072	613	440	1065	710	472	988	780	565
Dissolved COD (mg/l)	3790	3340	1530	3790	2060	1530	3550	2580	1850	3100	1850	2860
MLSS (mg/l)	604	197	73	300	170	121	206	275	248	302	290	270
MLVSS (mg/l)	544	190	63	292	157	117	186	233	238	275	272	254

April 7 Treatment Cycle

flow (gal treated)	12,840					
pH	8.2	8.7	6.2	8.4	8.1	6.4
Dissolved COD (mg/l)	4230	1730	1570	2660	2260	1730
MLSS (mg/l)	344	473	180	210	427	315
MLVSS (mg/l)	139	440	169	155	394	268

Table 6 (continued)

Operation of Unit 2 (February 3 - April 27, 1971)

Carbon Adsorption - Anaerobic Regeneration

A = RAW EFFLUENT COMPOSITE B = UNIT 1 EFFLUENT COMPOSITE C = UNIT 2 EFFLUENT COMPOSITE

April 9 Treatment Cycle

	10:00 A.M			11:30 A.M.			1:00 P.M.			2:30 P.M.		
	A	B	C	A	B	C	A	B	C	A	B	C
flow (gal treated)	22,480											
pH	9.5	6.7	5.9	8.1	6.8	5.9	7.2	7.2	6.1	8.1	6.8	5.9
Total Carbon (mg/l)	525	590	608	570	458	450	930	578	535	830	625	525
Dissolved COD (mg/l)	1320	1160	1640	1320	1280	1360	2880	1480	1320	2360	1640	1320
MLSS (mg/l)	142	336	121	191	306	170	195	266	137	164	282	170
MLVSS (mg/l)	102	300	113	182	276	163	187	226	129	154	277	155

April 12 Treatment Cycle

flow (gal treated)	27,760											
pH	6.5	6.6	6.2	8.4	6.2	6.2	8.1	7.2	6.5	8.0	7.1	6.4
Total Carbon (mg/l)	550	518	485	688	530	440	910	515	380	945	675	465
Dissolved COD (mg/l)	1200	1040	1040	1680	1080	960	2720	960	880	3080	1600	1120
MLSS (mg/l)	155	270	63	182	280	33	260	263	253	180	230	107
MLVSS (mg/l)	122	216	60	140	217	30	200	170	137	140	190	101

Table 6 (continued)

Operation of Unit 2 (February 3 - April 27, 1971)

Carbon Adsorption - Anaerobic Regeneration

A = RAW EFFLUENT COMPOSITE B = UNIT 1 EFFLUENT COMPOSITE C = UNIT 2 EFFLUENT COMPOSITE

April 13 Treatment Cycle

	10:00 A.M.			11:30 A.M.			1:00 P.M.			2:30 P.M.		
	A	B	C	A	B	C	A	B	C	A	B	C
flow (gal treated)	14,760											
pH	10.1	7.9	7.0	9.1	8.3	6.8						
Total Carbon (mg/l)	825	408	392	795	525	442						
Dissolved COD (mg/l)	2160	800	720	2200	1120	1040						
MLSS (mg/l)	131	224	180	73	182	117						
MLVSS (mg/l)	127	218	175	66	180	110						

April 15 Treatment Cycle

flow (gal treated)	27,470											
pH	N/A											
Total Carbon (mg/l)	585	735	675	770	745	672	595	695	635	985	695	620
Inorganic Carbon (mg/l)	185	135	150	150	165	120	232	115	120	170	95	105
Total Organic Carbon (mg/l)	400	600	525	620	580	552	363	580	515	815	600	515
Dissolved COD (mg/l)	1790	2240	2090	2310	2200	1970	3430	2160	1870	3020	2050	1830
MLSS (mg/l)	82	310	61	116	290	53	85	236	157	126	254	158
MLVSS (mg/l)	49	270	58	97	276	49	84	227	135	118	248	155

Table 6 (continued)

Operation of Unit 2 (February 3 - April 27, 1971)

Carbon Adsorption - Anaerobic Regeneration

A = RAW EFFLUENT COMPOSITE B = UNIT 1 EFFLUENT COMPOSITE C = UNIT 2 EFFLUENT COMPOSITE

April 16 Treatment Cycle

	10:00 A.M.			11:30 A.M.			1:00 P.M.			2:30 P.M.		
	A	B	C	A	B	C	A	B	C	A	B	C
flow (gal treated)	13,670											
pH	8.3	7.0	5.8	7.9	7.2	6.4						
Total Carbon (mg/l)	490	560	495	660	460	442						
Inorganic Carbon (mg/l)	160	130	90	165	115	80						
Total Organic Carbon (mg/l)	330	430	405	495	345	362						
Dissolved COD (mg/l)	1530	1490	1420	1530	1420	1380						
MLSS (mg/l)	178	310	293	235	264	200						
MLVSS (mg/l)	162	284	265	193	246	193						

April 19 Treatment Cycle

flow (gal treated)	26,740											
pH	6.6	7.0	6.2	7.2	7.1	6.5	8.3	7.2	6.8	9.2	8.1	7.2
Total Carbon (mg/l)	452	410	405	675	390	338	810	490	358	1484	690	540
Inorganic Carbon (mg/l)	175	132	98	145	125	98	130	105	95	165	118	111
Total Organic Carbon (mg/l)	277	278	307	530	265	240	680	385	263	1319	572	429
Dissolved COD (mg/l)	1060	1022	1022	2080	1135	872	2690	1135	948	3900	1780	1175
MLSS (mg/l)	142	117	36	143	292	77	140	183	92	185	210	162
MLVSS (mg/l)	133	92	32	143	268	74	134	133	90	173	203	148

Table 6 (continued)

Operation of Unit 2 (February 3 - April 27, 1971)

Carbon Adsorption - Anaerobic Regeneration

A = RAW EFFLUENT COMPOSITE B = UNIT 1 EFFLUENT COMPOSITE C = UNIT 2 EFFLUENT COMPOSITE

April 20 Treatment Cycle

	10:00 A. M.			11:30 A.M.			1:00 P.M.			2:30 P.M.		
	A	B	C	A	B	C	A	B	C	A	B	C
flow (gal treated)	12,820											
pH	8.1	7.3	6.8	8.0	7.2	7.0						
Total Carbon (mg/l)	832	570	450	750	675	545						
Inorganic Carbon (mg/l)	140	90	68	170	102	78						
Total Organic Carbon (mg/l)	692	480	382									
Dissolved COD (mg/l)	2725	1930	1400	2045	1860	1520						
MLSS (mg/l)	192	323	268	127	328	204						
MLVSS (mg/l)	152	313	257	108	300	182						

Table 6 (continued)

Operation of Unit 2 (February 3 - April 27, 1971)

Carbon Adsorption - Anaerobic Regeneration

A = RAW EFFLUENT COMPOSITE B = UNIT 1 EFFLUENT COMPOSITE C = UNIT 2 EFFLUENT COMPOSITE

April 22 Treatment Cycle

	10:00 A. M.			11:30 A. M.			1:00 P. M.			2:30 P. M.		
	A	B	C	A	B	C	A	B	C	A	B	C
flow (gal treated)	26,980											
pH	7.7	6.8	5.8	7.4	6.6	7.1	11.2	6.4	6.0	9.5	6.9	6.1
Total Carbon (mg/l)	294	490	450	232	445	425	680	412	378	560	410	350
Inorganic Carbon (mg/l)	70	65	50	60	78	35	100	72	65	110	70	55
Total Organic Carbon (mg/l)	224	425	400	172	367	370	580	340	313	450	340	295
Dissolved COD (mg/l)	732	1500	1500	570	1260	1180	2400	1180	1020	2070	1420	1140
MLSS (mg/l)	66	348	210	78	350	210	198	347	282	128	450	290
MLVSS (mg/l)	64	324	202	60	330	195	135	313	242	112	400	265

April 23 Treatment Cycle

flow (gal treated)	14,090					
pH	7.0	5.6	5.9	7.6	6.5	6.1
Dissolved COD (mg/l)	1950	1380	1300	2480	1420	1300
MLSS (mg/l)	405	640	298	363	580	398
MLVSS (mg/l)	133	363	144	150	296	195

Table 6 (continued)

Operation of Unit 2 (February 3 - April 27, 1971)

Carbon Adsorption - Anaerobic Regeneration

A = RAW EFFLUENT COMPOSITE B = UNIT 1 EFFLUENT COMPOSITE C = UNIT 2 EFFLUENT COMPOSITE

April 26 Treatment Cycle

	10:00 A.M.			11:30 A.M.			1:00 P.M.			2:30 P.M.		
	A	B	C	A	B	C	A	B	C	A	B	C
Dissolved COD (mg/l)	1550	565	565	1630	1110	755	2180	1470	835	2540	1900	1270
MLSS (mg/l)	124	70	43	170	94	29	184	97	28	110	151	39
MLVSS (mg/l)	122	68	43	160	92	29	167	93	28	106	136	36

April 27 Treatment Cycle

Dissolved COD (mg/l)	2700	1940	1670	2260	1820	1670
MLSS (mg/l)	138	158	114	102	158	134
MLVSS (mg/l)	136	155	112	101	152	132

Table 7

Operation of Unit 1 - Unit 2 - Unit 3 (July 13 - September 30, 1971)

Point 1 = Raw Influent Point 2 = Unit 1 Effluent Point 3 = Unit 2 Effluent Point 4 = Unit 3 Effluent

Treatment Cycle

		Leg A - July 13			Leg B - July 14		
Time	Point	COD_5	SS	VSS	COD_5	SS	VSS
9:00 A.M.	1						
	2						
	3						
	4						
10:00 A.M.	1				965	158	146
	2				440	236	220
	3				386	77	77
	4				0	42	40
11:30 A.M.	1	1090	195	130	1380	220	166
	2	196	54	40	550	150	145
	3	62	42	20	303	51	44
	4	83	6	6	0	72	69
1:00 P.M.	1	660	135	77			
	2	269	210	142			
	3	0	240	167			
	4	0	29	16			
2:30 P.M.	1	1700	114	62			
	2	393	262	202			
	3	62	186	122			
	4	42	0	0			

Table 7 (continued)

Operation of Unit 1 - Unit 2 - Unit 3 (July 13 - September 30, 1971)

Point 1 = Raw Influent Point 2 = Unit 1 Effluent Point 3 = Unit 2 Effluent Point 4 = Unit 3 Effluent

Treatment Cycle

		Leg A - July 15			Leg B - July 16		
Time	Point	COD_5	SS	VSS	COD_5	SS	VSS
10:00 A.M.	1	992	150	125			
	2	800	160	160			
	3	303	140	140			
	4	193	42	42			
11:30 A.M.	1	113	102	76	2150	147	105
	2	854	152	152	1150	150	127
	3	635	104	100	1050	153	123
	4	277	40	39	525	65	62
1:00 P.M.	1						
	2						
	3						
	4						
2:30 P.M.	1	2450	250	200	2020	267	213
	2	880	133	123	1420	173	137
	3	386	132	126	1180	97	74
	4	165	41	37	971	14	12
3:00 P.M.	1				2810	240	213
	2				1550	214	190
	3				1370	100	85
	4				840	44	30

Table 7 (continued)

Operation of Unit 1 - Unit 2 - Unit 3 (July 13 - September 30, 1971)

Point 1 = Raw Influent Point 2 = Unit 1 Effluent Point 3 = Unit 2 Effluent Point 4 = Unit 3 Effluent

Leg A - July 19 Treatment Cycle

Time	Point	COD_5	SS	VSS	Time	Point	COD_5	SS	VSS
9:00 A.M.	1				1:00 P.M.	1			
	2					2	1980	280	233
	3					3	1030	160	116
	4					4	767	82	68
10:00 A.M.	1				2:00 P.M.	1			
	2	1615	168	133		2			
	3	925	122	72		3			
	4	900	59	49		4			
11:00 A.M.	1				3:00 P.M.	1			
	2	1640	187	152		2			
	3	1060	170	136		3			
	4	715	73	58		4			
12:00 P.M.	1	3100	410	330					
	2	1615	220	155					
	3	1060	162	132					
	4	793	73	55					

Table 7 (continued)

Operation of Unit 1 - Unit 2 - Unit 3 (July 13 - September 30, 1971)

Point 1 = Raw Influent Point 2 = Unit 1 Effluent Point 3 = Unit 2 Effluent Point 4 = Unit 3 Effluent

Leg B - July 20 Treatment Cycle

Time	Point	COD_5	SS	VSS
9:00 A.M.	1	1300	46	43
	2	1590	215	200
	3	1380	212	193
	4	626	266	176
10:00 A.M.	1			
	2	1225	143	140
	3	1129	42	41
	4	730	191	190
11:00 A.M.	1			
	2	1380	138	125
	3	912	36	32
	4	730	63	59
12:00 P.M.	1	1620	210	206
	2	1880	206	190
	3	1055	53	53
	4	806	39	36

Time	Point	COD_5	SS	VSS
1:00 P.M	1			
	2	1640	150	150
	3	1225	51	48
	4	912	76	61
2:00 P.M.	1			
	2	1690	180	173
	3	1330	150	137
	4	808	115	102
3:00 P.M.	1	1620	150	137
	2	1720	185	185
	3	1300	73	68
	4	885	56	53

Table 7 (continued)

Operation of Unit 1 - Unit 2 - Unit 3 (July 13 - September 30, 1971)

Point 1 = Raw Influent Point 2 = Unit 1 Effluent Point 3 = Unit 2 Effluent Point 4 = Unit 3 Effluent

Leg A - July 21 Treatment Cycle

Time	Point	COD_5	SS	VSS	Time	Point	COD_5	SS	VSS
9:00 A.M.	1	2280	112	83	1:00 P.M.	1			
	2	1945	270	260		2	2110	254	250
	3	2190	480	425		3	1420	172	166
	4	555	504	386		4	2080	1230	1120
10:00 A.M.	1				2:00 P.M.	1			
	2	1780	280	226		2	2140	258	190
	3	1550	227	195		3	1780	1005	475
	4	1030	76	67		4	2140	905	775
11:00 A.M.	1				3:00 P.M.	1			
	2	1750	240	213		2			
	3	1470	176	156		3			
	4	861	93	76		4			
12:00 P.M.	1	2720	205	148					
	2	1720	155	133					
	3	1110	144	140					
	4	945	67	63					

Table 7 (continued)

Operation of Unit 1 - Unit 2 - Unit 3 (July 13 - September 30, 1971)

Point 1 = Raw Influent Point 2 = Unit 1 Effluent Point 3 = Unit 2 Effluent Point 4 = Unit 3 Effluent

Leg B - July 22 Treatment Cycle

Time	Point	COD_5	SS	VSS	Time	Point	COD_5	SS	VSS
9:00 A.M.	1	2392	190	140	1:00 P.M.	1			
	2	1183	220	125		2	1962	193	163
	3	1425	173	168		3	1478	198	150
	4	1425	610	455		4	1048	61	48
10:00 A.M.	1				2:00 P.M.	1			
	2	1290	213	177		2	2016	227	190
	3	1048	62	52		3	1452	270	183
	4	833	165	113		4	3340	1380	1220
11:00 A M.	1				3:00 P.M	1			
	2	1640	170	147		2			
	3	1048	43	39		3			
	4	833	47	34		4			
12:00 P.M	1	2634	475	390					
	2	1882	237	170					
	3	1371	138	103					
	4	914	86	68					

Table 7 (continued)

Operation of Unit 1 - Unit 2 - Unit 3 (July 13 - September 30, 1971)

Point 1 = Raw Influent Point 2 = Unit 1 Effluent Point 3 = Unit 2 Effluent Point 4 = Unit 3 Effluent

Leg A - July 23 Treatment Cycle

Time	Point	TC	IC	TOC	pH	Temp.	COD_T	SS	VSS	DO
9:00 A.M.	1	565	75	490	6.8	85° F.	1693	140	113	7.3
	2	415	65	350	7.1	84	1190	203	187	7.7
	3	352	70	282	6.2	85	873	97	97	4.4
	4	280	35	245	6.3	85	555	565	510	0.1
10:00 A.M.	1									
	2	468	65	403	6.3	85	1323	197	183	7.2
	3	315	62	253	5.8	85	635	68	65	2.9
	4	300	82	218	6.1	85	608	915	118	1.3
11:00 A.M.	1									
	2	555	75	480	7.4	90	1561	250	235	8.3
	3	405	55	350	6.1	91	1323	327	320	2.3
	4	300	68	232	5.9	90	529	60	56	1.4
12:00 P.M.	1	462	85	377	8.2	93	1137	94	81	7.1
	2	625	85	540	8.3	92	1719	260	226	9.3
	3	460	70	390	6.2	92	1164	127	125	1.0
	4	375	68	307	6.0	92	820	96	92	0.8
1:00 P.M.	1									
	2	610	85	525	8.3	96	1852	136	121	10.0
	3	470	78	392	6.8	96	1402	135	114	3.8
	4	400	75	325	5.9	95	1084	79	70	0.9
2:00 P.M.	1									
	2	585	88	497	7.8	96	1746	135	128	9.7
	3	475	82	393	6.5	95	1296	62	62	2.9
	4	422	82	340	6.0	95	979	26	26	0.8
3:00 P.M.	1	820	90	730	8.0	96	2619	178	178	7.1
	2	585	85	500	7.6	96	1534	74	74	9.8
	3	468	78	390	6.4	96	1137			3.2
	4	208	82	326	6.2	96	873			0.9

Total Gallons Treated: 37,340

Table 7 (continued)

Operation of Unit 1 - Unit 2 - Unit 3 (July 13, - September 30, 1971)

Point 1 = Raw Influent Point 2 = Unit 1 Effluent Point 3 = Unit 2 Effluent Point 4 = Unit 3 Effluent

Leg B-July 26

Time	Point	COD_T	SS	VSS
9:00 A.M.	1	1296	168	148
	2	1402	69	58
	3	1772	370	310
	4	1217	660	548
1:00 P.M.	1			
	2	1349	183	150
	3	820	64	51
	4	635	94	73
2:00 P.M.	1			
	2	1270	180	148
	3	873	69	58
	4	582	80	65
3:00 P.M.	1	3068	160	146
	2	1349	160	142
	3	767	76	58
	4	450	64	63

Leg A-July 27

Time	Point	COD_T	SS	VSS
9:00 A.M.	1	848	52	32
	2	1190	170	152
	3	1510	443	403
	4	1060	540	470
10:00 A.M	1			
	2	1270	128	125
	3	874	101	81
	4	582	56	41
11:00 A.M	1			
	2	1250	195	150
	3	688	103	74
	4	715	106	102
12:00 P.M	1	715	56	48
	2	1265	193	162
	3	662	58	57
	4	503	81	78
1:00 P.M.	1			
	2	1030	145	140
	3	609	30	29
	4	582	35	31
2:00 P M.	1			
	2	1005	136	104
	3	1005	210	194
	4	427	46	36
3:00 P.M.	1	1825	37	27
	2	1165	135	123
	3	555	115	97
	4	398	58	50

Total Gallons Treated: 57,310

Table 7 (continued)

Operation of Unit 1 - Unit 2 - Unit 3 (July 13 - September 30, 1971)

Point 1 = Raw Influent Point 2 = Unit 1 Effluent Point 3 = Unit 2 Effluent Point 4 = Unit 3 Effluent

Leg B - July 28 Treatment Cycle

Time	Point	TC	IC	TOC	pH	Temp.	COD_T	SS	VSS	DO
9:00 A. M.	1	250	40	210	7.0	27° C.	530	18	16	6.7
	2	450	40	410	6.3	27	1160	206	203	0.5
	3	470	45	425	6.2	27	1590	313	228	0.6
	4	350	110	240	7.5	27	1530	1270	630	0.3
10:00 A. M.	1									
	2	355	40	315	6.6	28	1030	120	117	0.4
	3	420	90	330	6.2	28	1160	77	73	0.7
	4	400	140	260	7.1	28	918	73	73	0.7
11:00 A. M.	1	390	60	330	6.7	30	1140	220	177	0.5
	2	350	60	290	6.2	30	1030	46	45	0.6
	3	305	70	235	6.3	30	715	60	49	0.6
	4	640	80	560	9.0	28.5	2090	146	122	7.6
12:00 P. M.	1	420	65	355	7.5	28.5	1140	210	206	0.6
	2	320	50	270	6.4	28.5	845	75	74	0.4
	3	300	55	245	6.4	28.5	820	42	41	0.5
	4									
1:00 P. M.	1	440	60	380	6.5	31	1240	233	230	0.2
	2	380	60	320	6.2	31	950	126	122	0.15
	3	285	60	225	6.3	31	635	52	52	0.3
	4	500	70	430	6.3	30	1400	305	300	0.4
2:00 P. M.	1	350	60	290	6.1	30	952	104	104	0.2
	2	290	60	230	6.1	30	635	39	37	0.5
	3	760	100	660	9.4	32	2650	120	107	12.0
	4	510	60	450	7.5	32	1720	353	350	0.7
3:00 P. M.	1	380	60	320	6.3	32	1270	360	354	0.3
	2	300	70	230	6.2	32	742	62	59	0.3
	3									
	4									

Total Gallons Treated: 52,530

Table 7 (continued)

Operation of Unit 1 - Unit 2 = Unit 3 (July 13 - September 30, 1971)

Point 1 - Raw Influent Point 2 = Unit 1 Effluent Point 3 = Unit 2 Effluent Point 4 = Unit 3 Effluent

Leg A - July 29 Treatment Cycle

Time	Point	TC	IC	TOC	pH	Temp.	COD_T	SS	VSS	DO
10:00 A.M.	1									
	2	662	80	578	6.8	30° C.	1070	236	213	0.7
	3	620	100	520	6.5	30	932	210	180	0.4
	4	575	145	430	6.6	30	964	73	69	0.5
11:00 A.M.	1									
	2	620	98	522	7.2	30	1250	206	200	0.6
	3	582	98	484	7.0	30	1025	188	175	0.6
	4	565	160	405	6.9	30	678	30	30	0.5
12:00 P.M.	1	515	92	417	6.6	32	780	140	120	6.0
	2	555	65	490	6.4	32	970	203	193	0.3
	3	545	105	440	6.1	32	932	133	128	0.5
	4	482	110	372	6.2	32	834	118	118	0.6
1:00 P.M.	1									
	2	530	70	460	6.7	34	912	163	163	0.6
	3	450	65	385	6.4	34	755	155	153	0.5
	4	400	70	330	6.1	34	630	42	42	0.6
2:00 P.M.	1									
	2	605	70	535	6.6	34	1170	230	224	0.7
	3	445	60	385	6.2	34	600	118	111	0.05
	4	345	75	270	6.0	34	521	50	48	0.05
3:00 P.M.	1				6.8	32	2550	192	180	0.03
	2				6.7	32	1430	360	345	0.03
	3				6.2	32	832	183	145	0.03
	4				6.1	32	855	173	165	0.04

Total Gallons Treated: 32,370

Table 7 (continued)

Operation of Unit 1 - Unit 2 - Unit 3 (July 13,- September 30, 1971)

Point 1 = Raw Influent Point 2 = Unit 1 Effluent Point 3 = Unit 2 Effluent Point 4 = Unit 3 Effluent

Leg B - July 30 Treatment Cycle

Time	Point	TC	IC	TOC	pH	Temp.	COD_T	SS	VSS	DO
9:00 A.M.	1	315	40	275	8.0	28° C.	978	58	52	8.4
	2	480	40	420	7.6	28	1680	415	320	0.6
	3	425	60	365	6.4	28	1200	180	152	0.2
	4	310	90	220	7.0	28	1660	1090	850	0.4
10:00 A.M.	1									
	2	430	40	370	6.2	30	1300	200	183	0.3
	3	425	130	295	5.9	30	1430	127	103	1.8
	4	525	130	395	6.9	30	850	150	136	0.4
11:00 A.M.	1									
	2	395	45	350	6.3	32	1300	273	273	0.5
	3	465	82	383	6.5	32	1250	71	49	0.3
	4	395	130	265	6.8	32	955	52	49	0.3
12:00 P.M.	1	475	38	437	7.1	32	1600	146	146	8.1
	2	390	42	348	6.7	32	1330	270	243	0.4
	3	395	42	353	6.6	32	1130	260	260	0.3
	4	360	88	272	6.5	32	827	36	36	0.3
1:00 P.M.	1									
	2	415	35	380	6.8	34	1230	206	206	0.5
	3	355	38	317	6.6	34	1000	98	80	0.4
	4	310	58	252	6.6	34	1100	46	46	0.4
2:00 P.M.	1									
	2	385	45	340	6.2	33	1330	290	263	0.3
	3	360	45	315	6.4	33	1180	95	78	0.4
	4	285	65	220	6.3	33	825	47	38	0.4

Total Gallons Treated: 10,490

Table 7 (continued)

Operation of Unit 1 - Unit 2 - Unit 3 (July 13 - September 30, 1971)

Point 1 = Raw Influent Point 2 = Unit 1 Effluent Point 3 = Unit 2 Effluent Point 4 = Unit 3 Effluent

Leg A - August 2 Treatment Cycle

Time	Point	TC	IC	TOC	pH	Temp.	COD_T	SS	VSS	DO
9:00 A. M.	1	365	55	310	7.1	31° C.	1073	128	128	7.5
	2	450	52	398	6.8	31	1327	160	160	6.2
	3	310	102	208	6.6	31	621	220	220	3.8
	4	260	125	135	6.5	31	198	132	132	3.2
10:00 A. M.	1	390	60	330	6.9	31	650	100	100	6.0
	2	285	85	200	6.5	31	395	78	78	3.5
	3	335	170	165	6.7	31	141	51	51	3.0
	4	335	50	285	7.0	32	621	94	94	5.0
11:00 A. M.	1	345	120	225	6.4	32	226	27	27	3.1
	2	280	125	155	6.5	32	198	30	30	3.0
	3	715	45	670	6.6	32	2711	93	93	5.0
	4	450	50	400	6.4	32	988	88	88	2.8
12:00 P. M.	1	275	55	220	6.3	32	367	144	144	2.7
	2	230	80	150	6.2	32	113	3	3	2.8
	3	485	60	425	6.8	34	1214	52	52	5.3
	4	305	55	250	6.3	34	537	8	8	2.8
1:00 P. M.	1	260	65	195	6.2	34	254	7	7	2.5
	2	485	50	435	6.4	34	1412	57	57	4.8
	3	300	50	250	6.4	34	734	14	14	2.0
	4	240	65	175	6.3	34	395	4	4	2.0

Table 7 (continued)

Operation of Unit 1 - Unit 2 - Unit 3 (July 13 - September 30, 1971)

Point 1 = Raw Influent Point 2 = Unit 1 Effluent Point 3 = Unit 2 Effluent Point 4 = Unit 3 Effluent

Leg B - August 3 Treatment Cycle

Time	Point	TC	IC	TOC	pH	Temp.	COD_T	SS	VSS	DO
9:00 A.M.	1	425	60	365	7.2	30° C.	1237	77	72	2.0
	2	465	50	415	6.2	30	1717	180	180	1.3
	3	505	100	400	6.4	30	1667	303	300	0.4
	4	335	260	75	6.5	30	505	445	430	0.5
10:00 A.M.	1	475	50	425	6.8	32	1566	114	108	0.6
	2	495	95	400	6.5	32	1515	237	237	0.5
	3	325	270	55	6.3	32	556	337	333	0.5
	4	440	45	395	6.9	32	1540	118	113	0.3
11:00 A.M.	1	485	90	395	6.5	32	1869	236	234	0.4
	2	305	230	75	6.4	32	909	815	765	0.5
	3	470	35	435	7.0	34	1364	73	72	0.6
	4	475	45	430	6.6	34	1426	158	150	0.4
12:00 P.M.	1	530	100	430	6.3	34	1364	195	195	0.3
	2	460	175	285	6.5	34	1162	92	91	0.4
	3	455	60	395	6.7	34	1338	101	101	0.5
	4	500	105	395	6.2	34	1465	183	180	0.3
1:00 P.M.	1	405	170	235	6.8	34	1035	260	260	0.4
	2	460	52	408	6.4	34	1364	89	87	0.5
	3	425	50	375	6.5	34	1263	30	30	0.4
	4	375	70	305	6.4	34	1212	59	52	0.3
2:00 P.M.	1	830	75	755	7.0	34	2601	93	93	6.3
	2	465	55	410	6.3	34	1389	67	63	0.4
	3	440	65	375	6.7	34	1288	28	28	0.3
	4	375	65	310	6.4	34	1042	81		0.4

Total Gallons Treated 78,830

Table 7 (continued)

Operation of Unit 1 - Unit 2 - Unit 3 (July 13 - September 30, 1971)

Point 1 = Raw Influent Point 2 - Unit 1 Effluent Point 3 = Unit 2 Effluent Point 4 - Unit 3 Effluent

Treatment Cycle - Leg A - August 4

Time	Point	TC	IC	TOC	pH	Temp.	COD_T	SS	VSS	DO
NO SAMPLES BEFORE 11:00 A.M. - UNIT SHUT DOWN										
11:00 A.M.	2	290	95	195	7.3	30° C.	867	170	170	0.5
	3	265	70	195	7.0	30	796	186	42	0.4
	4	365	205	160	7.8	30	1692	1180	1180	0.4
12:00 P.M.	1	510	70	440	7.0	31	1567	100	97	8.2
	2	265	65	200	7.1	31	871	146	142	0.5
	3	250	65	185	6.5	31	771	120	116	0.6
	4	395	215	180	8.7	31	939	433	350	2.2
1:00 P.M.	2	325	50	275	6.7	32	1169	170	170	0.5
	3	275	50	225	6.4	32	921	135	127	0.4
	4	375	210	165	6.5	32	697	243	209	0.3
2:00 P.M.	2	360	65	295	6.8	32	1169	170	163	0.5
	3	295	55	240	6.6	32	933	188	178	0.5
	4	380	225	155	6.4	32	672	218	181	0.5

Table 7 (continued)

Operation of Unit 1 - Unit 2 - Unit 3 (July 13 - September 30, 1971)

Point 1 = Raw Influent Point 2 = Unit 1 Effluent Point 3 = Unit 2 Effluent Point 4 = Unit 3 Effluent

Treatment Cycle - Leg B August 5

Time	Point	TC	IC	TOC	pH	Temp.	COD_T	SS	VSS	DO
9:00 A.M.	1	465	75	390	6.7	30° C.				6.3
	2	375	70	305	6.7	30				0.4
	3	315	90	225	6.5	30				0.4
	4	360	210	150	6.3	30				0.3
10:00 A.M.	1	370	70	300	6.4	30				0.4
	2	315	80	335	6.5	30				0.4
	3	350	195	155	6.6	30				0.5
	4	385	65	320	6.4	31				0.4
11:00 A.M.	1	335	95	240	6.5	31				0.3
	2	350	195	155	6.3	31				0.4
	3	535	70	465	6.7	32				0.4
	4	350	85	265	6.2	32				0.3
12:00 P.M.	1	370	115	155	6.3	32				0.3
	2	395	195	200	6.3	32				0.4
	3	345	35	310	6.4	32				0.5
	4	350	35	315	6.5	32				0.4
1:00 P.M.	1	300	60	240	6.3	32				0.4
	2	210	40	170	6.5	34				0.6
	3	185	45	140	6.6	34				0.3
	4	175	115	60	6.4	34				0.3
2:00 P.M.	1	295	50	245	6.6	34				6.0
	2	240	60	180	6.7	34				0.5
	3	190	65	125	6.4	34				0.4
	4	150	80	70	6.2	34				0.3

Total Gallons Treated = 31,860

Table 7 (continued)

Operation of Unit 1 - Unit 2 - Unit 3 (July 13 - September 30, 1971)

Point 1 = Raw Influent Point 2 = Unit 1 Effluent Point 3 = Unit 2 Effluent Point 4 = Unit 3 Effluent

Treatment Cycle - Leg A August 24

Time	Point	TC	IC	TOC	pH	Temp.	COD_T	SS	VSS	DO
9:00 A.M.	1	345	72	273	6.3	26° C.	940	86	72	6.2
	2	205	45	160	6.8	26	517	92	92	8.2
	3	425	215	210	6.7	26	470	620	615	2.6
	4	270	215	55	8.4	26	408	208	204	1.6
10:00 A.M.	1	220	60	160	7.5	26	635	101	101	8.1
	2	265	155	110	7.2	26	540	40	40	4.2
	3	305	242	63	8.5	26	447	89	88	3.1
	4	270	60	190	7.2	26	705	86	83	6.8
11:00 A.M.	1	170	55	115	7.2	26	352	25	24	5.5
	2	212	135	135	7.4	26	308	57	57	3.2
	3	745	65	680	8.5	26	820	178	172	7.6
	4	380	60	320	8.7	26	1100	178	176	7.4
12:00 P.M.	1	190	45	145	7.8	26	680	22	22	7.0
	2	170	70	100	7.4	26	635	23	23	3.5
	3	460	65	395	7.2	25	1500	110	77	7.1
	4	248	40	208	7.4	25	728	32	32	5.6
1:00 P.M.	1	200	50	150	6.9	25	587	16	16	2.4
	2	532	68	464	7.8	25	1690	132	126	7.0
	3	305	62	243	7.5	25	894	27	25	5.5
	4	245	155	190	7.0	25	682	15	13	2.1
2:00 P.M.	1	615	70	545	8.2	25	2040	140	99	8.5
	2	608	75	533	7.8	25	1970	172	164	7.8
	3	360	55	305	6.6	25	1030	41	36	5.3
	4	288	55	233	6.3	25	775	49	45	2.3

Regeneration - Leg B August 24

Time	Date	Point	TC	IC	TOC	pH	DO
9:00 A.M.		Base of Unit II	-	-	-	-	
12:00 Noon	8/24	Unit III	275	218	57	8.8	5.3
9:00 A.M.	8/25	Base of Unit II	265	225	40	8.5	7.2
9:00 A.M.	8/25	Unit III	410	110	300	7.3	1.1

Table 7 (continued)

Operation of Unit 1 - Unit 2 - Unit 3 (July 13 - September 30, 1971)

Point 1 = Raw Influent Point 2 = Unit 1 Effluent Point 3 = Unit 2 Effluent Point 4 = Unit 3 Effluent

Treatment Cycle - Leg B - August 25

Time	Point	TC	IC	TOC	pH	Temp.	COD_T	SS	VSS	DO
9:00 A.M.	1	522	58	464	9.4	25° C.	1820	79	56	9.8
	2	475	72	403	8.6	25	1510	109	92	10.5
	3	190	80	110	7.4	25	1470	97	66	10.8
	4	310	225	85	7.3	25	1420	950	715	3.2
10:00 A.M.	2	490	80	410	8.3	26	1560	48	45	10.7
	3	365	155	210	7.3	26	970	153	151	2.3
	4	330	230	100	7.7	26	924	335	325	1.5
11:00 A.M.	2	485	75	410	8.7	26	1490	60	53	11.2
	3	455	115	340	7.4	26	1200	192	167	4.1
	4	385	200	185	7.6	26	780	89	86	2.2
12:00 P.M.	1	390	55	335	8.5	26	1180	160	142	9.5
	2	485	70	415	9.1	26	1440	68	65	9.6
	3	445	95	350	7.6	26	1250	72	50	4.1
	4	390	150	240	7.3	26	850	230	183	3.1
1:00 P.M.	2	465	62	403	8.0	26	1420	130	75	9.6
	3	430	60	370	7.6	26	1220	57	41	5.5
	4	350	110	240	7.2	26	780	164	162	2.5
2:00 P.M.	2	460	60	400	9.1	28	1370	178	135	9.2
	3	410	70	340	8.3	28	1160	47	45	3.8
	4	338	75	263	7.3	28	930	68	51	2.8
3:00 P.M.	1	495	72	423	10.8	28	1490	70	60	7.3
	2	480	70	410	9.8	28	1420	124	107	8.6
	3	405	80	325	8.2	28	1090	59	55	3.6
	4	335	88	247	7.0	28	780	48	45	2.7

Regeneration - Leg A August 25

Time	Date	Point	TC	IC	TOC	pH	DO
9:00 A.M.	8/25	Base of Unit II	490	82	408	7.8	7.2
12:00 Noon	8/25	Unit III	345	210	135	7.5	2.7
9:00 A.M.	8/26	Base of Unit II	385	130	255	7.4	2.5
9:00 A.M.	8/26	Unit III	415	245	170	8.2	0.3

Table 7 (continued)

Operation of Unit 1 - Unit 2 - Unit 3 (July 13 - September 30, 1971

Point 1 = Raw Influent Point 2 - Unit 1 Effluent Point 3 = Unit 2 Effluent Point 4 = Unit 3 Effluent

Treatment Cycle - Leg A - August 26

Time	Point	TC	IC	TOC	pH	Temp.	COD_T	SS	VSS	DO
9:00 A.M.	1	190	38	152	8.5	27° C.	643	31	30	9.8
	2	400	70	330	9.1	27	1214	100	91	14.8
	3	460	115	345	8.1	27	1333	145	128	4.7
	4	475	340	135	8.5	27	1095	640	570	0.4
10:00 A.M.	2	392	80	312	8.9	27	1095	72	62	9.9
	3	520	145	375	7.6	27	1384	75	61	5.3
	4	455	285	170	8.2	27	1143	380	370	1.1
11:00 A.M.	2	365	60	305	8.4	28	1119	62	60	8.1
	3	435	120	315	8.0	28	1024	54	51	5.2
	4	445	185	260	8.1	28	976	72	67	1.5
12:00 P.M.	1	460	68	392	8.9	28	1429	116	114	8.8
	2	370	55	315	9.3	28	1381	59	51	9.6
	3	315	82	233	8.0	28	714	33	31	3.9
	4	275	105	170	6.8	28	619	46	46	
1:00 P.M.	2	355	85	270	8.9	30	1095	55	55	8.9
	3	295	68	217	8.1	30	738	45	44	4.0
	4	240	120	120	7.0	30	524	57	57	2.8
2:00 P.M.	2	400	65	335	9.4	31	1238	67	60	9.0
	3	265	65	200	8.0	31	690	54	50	5.4
	4	225	60	165	6.4	31	548	40	36	2.0
3:00 P.M.	1	645	100	545	10.2	31	2119	159	159	9.3
	2	465	65	400	9.8	31	1286	82	80	8.7
	3	275	60	215	8.4	31	690	51	40	5.8
	4	235	75	160	6.4	31	619	49	47	2.2

Regeneration - Leg B - August 26

Time	Date	Point	TC	IC	TOC	pH	DO
9:00 A.M.	8/26	Base of Unit II	440	95	345	8.1	3.1
12:00 Noon		Unit III	390	132	258	6.8	0.2
9:00 A.M.		Base of Unit II	385	120	265	7. 7.1	3.1
9:00 A.M.		Unit III	255	165	90	7.4	0.5

Flow from Treatment System - 52,160 Gallons

Table 7 (continued)

Operation of Unit 1 - Unit 2 - Unit 3 (July 13 - September30, 1971

Point 1 = Raw Influent Point 2 = Unit 1 Effluent Point 3 = Unit 2 Effluent Point 4 = Unit 3 Effluent

Treatment Cycle - Leg B - August 27

Time	Point	TC	IC	TOC	pH	Temp.	COD_T	SS	VSS	DO
9:00 A.M.	1	390	62	328	9.2	28° C.	1425	570	570	7.8
	2	285	58	227	8.7	28	821	94	83	8.5
	3	407	135	272	7.6	28	1038	237	163	3.2
	4	315	160	155	7.5	28	918	200	173	0.4
10:00 A.M.	2	275	62	213	6.9	28	942	350	300	8.0
	3	265	60	205	7.1	28	628	38	35	5.0
	4	255	95	160	7.1	28	531	45	45	0.6
11:00 A.M.	2	300	60	240	7.2	27	918	248	234	7.8
	3	235	58	177	7.3	27	531	38	35	5.2
	4	200	65	135	7.2	27	373	36	36	0.6
12:00 P.M.	1	575	115	460	8.5	28	2536	198	196	8.0
	2	375	70	305	8.8	28	1280	335	313	8.6
	3	285	65	220	8.2	28	725	61	43	5.2
	4	185	65	120	7.4	28	327	37	34	0.4
1:00 P.M.	2	430	75	355	7.9	29	1377	274	266	8.6
	3	340	75	265	7.7	29	1038	133	126	6.2
	4	255	70	185	7.2	29	580	50	48	0.8
2:00 P.M.	2	450	85	365	8.1	31	1642	306	302	8.3
	3	370	85	285	7.8	31	1038	150	133	3.8
	4	275	75	200	7.2	31	749	81	67	0.4
3:00 P.M.	1	445	65	380	9.5	31	1715	487	407	8.0
	2	460	82	378	9.0	31	1377	333	315	8.2
	3	380	90	290	7.8	31	1087	139	119	4.0
	4	275	75	200	7.0	31	749	85	74	0.4

Regeneration - Leg A - August 27

Time	Date	Point	TC	IC	TOC	pH	DO
9:00 A.M.		Base of Unit II	312	55	257	7.0	8.2
12:00 Noon		Unit III	245	100	145	7.0	0.4

Flow from Treatment System - 36,240 Gallons.

Table 7 (continued)

Operation of Unit 1 - Unit 2 - Unit 3 (July 13 - September 30, 1971)

Treatment Cycle - Leg A - August 30

Point 1 = Raw Influent Point 2 = Unit 1 Effluent Point 3 = Unit 2 Effluent Point 4 = Unit 3 Effluent

Time	Point	TC	IC	TOC	pH	Temp.	COD_T	SS	VSS	DO
9:00 A.M.	1	445	72	373	6.1	26° C.	1414	250	240	2.0
	2	365	80	285	5.9	26	1035	121	113	3.4
	3	340	130	190	6.3	26	1414	590	580	4.6
	4	275	205	70	8.1	26	429	425	390	1.0
10:00 A.M.	2	320	100	220	6.8	28	833	165	145	4.8
	3	290	88	202	6.8	28	657	72	69	6.8
	4	325	135	190	6.8	28	581	158	154	4.0
11:00 A.M.	2	375	95	280	6.8	28	909	150	130	4.8
	3	245	68	177	6.8	28	429	59	56	6.7
	4	220	75	145	6.6	28	253	147	142	3.1
12:00 P.M.	1	435	60	-	6.7	28	1313	88	84	5.1
	2	420	100	-	6.7	28	1263	150	140	6.2
	3	265	65	-	6.6	28	1061	62	57	1.8
	4	215	68	-	6.7	28	354	43	35	1.2
1:00 P.M.	2	455	85	-	6.8	32	1313	173	173	6.3
	3	305	65	-	6.8	32	707	76	73	1.3
	4	260	70	-	6.7	32	505	36	36	1.6
2:00 P.M.	2	500	85	-	6.7	32	1414	225	153	6.2
	3	335	70	-	6.6	32	985	96	84	1.6
	4	285	62	-	6.7	32	480	53	45	1.4
3:00 P.M.	1	550	52	.	6.9	32	1667	66	61	4.8
	2	555	75	-	6.7	32	1490	207	183	6.2
	3	395	70	-	6.6	32	1010	130	118	2.1
	4	315	65	-	6.5	32	657	45	37	1.5

Regeneration - Leg B - August 30

Time	Date	Point	TC	IC	TOC	pH	DO
9:00 A.M.		Base of Unit II	-	-	-	-	-
12:00 Noon		Unit III	345	260	85	7.1	2.5
9:00 A.M.	8/31	Base of Unit II	492	160	332	5.9	1.2
9:00 A.M.	8/31	Unit III	385	315	70	8.6	4.1

Table 7 (continued)

Operation of Unit 1 - Unit 2 - Unit 3 (July 13 - September 30, 1971)

Point 1 = Raw Influent Point 2 = Unit 1 Effluent Point 3 = Unit 2 Effluent Point 4 = Unit 3 Effluent

Treatment Cycle - Leg B - August 31

Time	Point	TC	IC	TOC	pH	Temp.	COD_T	SS	VSS	DO
9:00 A.M.	1	320	70	250	8.4	30° C.	1031	90	69	7.3
	2	345	95	250	7.6	30	1055	257	247	0.9
	3	525	225	300	7.0	30	1535	270	220	1.4
	4	345	220	125	8.8	30	647	179	126	1.4
10:00 A.M.	2	355	82	273	7.0	30	911	197	137	1.0
	3	405	135	270	6.8	30	1199	64	40	1.6
	4	500	245	255	7.8	30	1055	56	48	1.3
11:00 A.M.	2	375	82	293	7.0	31	935	223	127	-
	3	340	108	232	6.9	31	1199	284	218	-
	4	310	110	200	6.9	31	600	53	37	-
12:00 P.M.	1	430	-	-	8.3	30	1775	70	47	6.5
	2				7.8	30	1295	213	130	1.1
	3				7.5	30	983	150	100	1.2
	4				6.8	30	733	41	27	1.1
1:00 P.M.	2						1415	255	203	
	3						815	100	91	
	4						408	48	42	
2:00 P.M.	2						1847	223	187	
	3						1127	92	90	
	4						767	44	37	
3:00 P.M.	1						1535	124	84	
	2						1487	257	240	
	3						1103	114	99	
	4						815	62	41	

Regeneration - Leg A - August 31

Time	Date	Point	TC	IC	TOC	pH	DO
9:00 A.M.		Base of Unit II	500	55	445	5.8	2.7
12:00 Noon		Unit III				7.1	2.2
9:00 A.M.		Base of Unit II	495	50	445	5.6	

Table 7 (continued)

Operation of Unit 1 - Unit 2 - Unit 3 (July 13 - September 30, 1971)

Point 1 = Raw Influent Point 2 = Unit 1 Effluent Point 3 = Unit 2 Effluent Point 4 = Unit 3 Effluent

Treatment Cycle - Leg A - September 1

Time	Point	TC	IC	TOC	pH	Temp.	COD_T	SS	VSS
10:00 A.M.	2	400	55	345	6.3	30° C.	1432	315	305
	3	410	55	355	6.0	30	1309	1040	190
	4	415	98	317	6.4	30	1210	135	134
11:00 A.M.	2	415	40	375	6.8	30	1481	265	260
	3	400	40	360	6.2	30	1407	190	177
	4	360	68	292	6.1	30	1062	152	145
12:00 P.M.	1	640	60	580	6.4	31	2271	86	79
	2	405	45	360	6.7	31	1333	323	280
	3	365	50	315	6.3	31	1105	200	183
	4	345	50	295	6.2	31	1086	114	109
1:00 P.M.	2	440	50	390	6.8	31	1555	273	267
	3	380	40	340	6.6	31	1506	260	230
	4	350	55	295	6.6	31	1136	127	126
2:00 P.M.	2	460	40	420	6.9	32	1704	257	247
	3	415	40	375	7.0	32	1457	220	200
	4	380	48	332	6.8	32	1136	80	74
3:00 P.M.	1	605	70	535	8.5	32	2074	131	120
	2	505	45	460	7.2	32	1802	335	315
	3	450	42	408	6.8	32	1481	193	193
	4	405	40	365	6.9	32	1257	88	85

Regeneration - Leg B - September 1

Time	Date	Point	TC	IC	TOC	pH
9:00 A.M.		Base of Unit II	535	75	460	5.9
12:00 Noon		Unit III	345	115	230	6.4
9:00 A.M.		Base of Unit II	635	112	523	6.3
9:00 A.M.		Unit III	330	165	165	6.9

Flow from Treatment System - 98,410 Gallons.

Table 7 (continued)

Operation of Unit 1 - Unit 2 - Unit 3 (July 13 - September 30, 1971)

Point 1 - Raw Influent Point 2 = Unit 1 Effluent Point 3 = Unit 2 Effluent Point 4 = Unit 3 Effluent

Treatment Cycle - Leg B - September 2

Time	Point	TC	IC	TOC	pH	Temp.	COD_T	SS	VSS
9:00 A.M.	1	290	35	255	8.6	28° C.	983	43	34
	2	338	58	280	8.0	28	1175	270	148
	3	510	135	375	6.7	28	1775	230	225
	4	300	170	130	7.2	28	1559	1290	1180
10:00 A.M.	2	350	60	290	7.7	30	1079	109	106
	3	485	130	355	6.7	30	1463	157	143
	4	340	165	175	7.0	30	1655	1180	1040
11:00 A.M.	2	440	110	330	8.0	30	1031	95	87
	3	450	120	330	6.9	30	1295	46	43
	4	405	185	220	6.8	30	1007	102	95
12:00 P.M.	1	220	65	155	8.8	32	671	38	34
	2	325	70	255	8.8	32	1055	83	80
	3	355	75	280	7.4	32	983	27	21
	4	370	120	250	7.2	32	1031	47	44
1:00 P.M.	2	310	65	245	8.6	32	839	119	86
	3	330	65	265	7.6	32	935	51	31
	4	310	80	230	7.1	32	863	62	51
2:00 P.M.	2	330	70	260	8.3	32	959	117	89
	3	320	70	250	7.5	32	839	35	35
	4	290	80	210	7.2	32	2398	49	27
3:00 P.M.	1	580	55	525	7.8	32	2062	87	50
	2	350	70	280	7.2	32	1103	133	130
	3	320	65	255	6.8	32	983	55	55
	4	280	65	215	7.0	32	743	40	36

Regeneration - Leg A - September 2

Time	Date	Point	TC	IC	TOC	pH
9:00 A.M.		Base of Unit II	370	60	310	7.2
12:00 Noon		Unit III	220	65	155	7.2

Flow from Treatment System - 43,760 Gallons.

Table 7 (continued)

Operation of Unit 1 - Unit 2 - Unit 3 (July 13 - September 30, 1971)

Point 1 = Raw Influent Point 2 = Unit 1 Effluent Point 3 = Unit 2 Effluent Point 4 = Unit 3 Effluent

Treatment Cycle - Leg A - September 7

Time	Point	TC	IC	TOC	pH	Temp.	COD_T	SS	VSS	DO
9:00 A.M.	1	890	50	840	8.4	28° C.	-	83	73	2.2
	2	405	45	360	7.0	28	1415	116	114	4.1
	3	538	130	308	6.8	28	1918	226	192	5.0
	4	415	270	145	8.2	28	1055	235	220	2.5
10:00 A.M.	2	398	58	340	7.3	29	1415	104	102	4.7
	3	415	60	355	7.0	29	1463	68	52	5.6
	4	442	125	317	6.9	29	1391	96	94	3.6
11:00 A.M.	2	450	55	395	6.8	30	1583	135	108	4.5
	3	390	52	338	6.8	30	1319	65	58	3.8
	4	400	95	305	6.9	30	1151	55	50	4.2
12:00 P.M.	1	700	60	640	7.8	30	2878	117	113	4.2
	2	525	55	470	7.1	30	2062	138	122	4.7
	3	395	50	345	7.0	30	1415	48	46	4.8
	4	370	68	302	7.0	30	1223	45	45	1.8
1:00 P.M.	2	585	62	523	6.8	32	2182	117	113	4.1
	3	500	50	450	6.9	32	1727	38	35	3.0
	4	470	60	410	7.0	32	1535	25	25	1.9
2:00 P.M.	2	560	65	495	6.6	31	2206	77	57	1.2
	3	490	55	435	6.9	31	1751	35	35	2.3
	4	458	60	398	6.5	31	1535	26	21	2.0
3:00 P.M.	1	525	45	480	6.8	31	1751	46	44	5.5
	2	555	58	497	6.6	31	2134	93	76	1.7
	3	448	60	388	6.7	31	1511	29	27	1.5
	4	490	55	435	6.4	31	1822	25	25	1.2

Regeneration - Leg B - September 7

Time	Date	Point	TC	IC	TOC	pH	DO
9:00 A.M.	9/7	Base of Unit II	-	-	-	-	-
12:00 Noon	9/7	Unit III	375	310	65	6.8	3.1
9:00 A.M.	9/8	Base of Unit II	630	75	555	5.9	1.1
9:00 A.M.	9/8	Unit III	410	355	55	7.9	0.9

Table 7 (continued)

Operation of Unit 1 - Unit 2 - Unit 3 (July 13 - September 30, 1971)

Point 1 = Raw Influent Point 2 = Unit 1 Effluent Point 3 = Unit 2 Effluent Point 4 = Unit 3 Effluent

Treatment Cycle - Leg B - September 8

Time	Point	TC	IC	TOC	pH	Temp.	COD_T	SS	VSS	DO
9:00 A.M.	1	255	50	205	7.1	28° C.	702	37	37	9.2
	2	520	65	455	6.8	28	1980	160	158	0.8
	3	455	160	295	6.9	28	1720	514	465	0.6
	4	445	335	110	8.3	28	653	510	460	0.4
10:00 A.M.	2	505	68	437	6.7	29	1830	247	238	0.4
	3	500	170	330	6.6	29	1670	253	244	0.6
	4	455	230	225	7.1	29	1060	170	170	0.4
11:00 A.M.	2	500	65	435	6.7	29	1790	168	164	0.6
	3	480	135	345	6.9	29	1380	69	66	0.7
	4	435	205	230	7.0	29	942	66	65	0.7
12:00 P.M.	1	525	55	470	6.9	30	2080	272	269	8.5
	2	465	75	390	6.9	30	1690	180	177	0.9
	3	395	100	295	6.8	30	1270	49	48	0.8
	4	370	140	230	6.2	30	870	101	91	0.9
1:00 P.M.	2	515	62	453	7.0	30	1810	154	134	0.9
	3	395	65	330	7.1	30	1110	73	60	0.7
	4	340	108	232	6.8	30	774	69	55	0.4
2:00 P.M.	2	490	70	420	7.1	32	1790	209	168	0.8
	3	370	85	285	7.0	32	1250	51	44	0.2
	4	310	82	228	6.9	32	895	43	36	0.3
3:00 P.M.	1	1340	115	1225	7.3	32	2220	278	228	6.2
	2	520	65	455	7.0	32	1930	190	126	0.4
	3	410	62	348	6.8	32	1500	132	103	0.9
	4	330	78	252	6.4	32	920	40	22	1.0

Regeneration - Leg A - September 8

Time	Date	Point	TC	IC	TOC	pH	DO
9:00 A.M.	9/8	Base of Unit II	520	55	465	5.8	0.8
12:00 Noon	9/8	Unit III	405	140	265	6.7	1.4
9:00 A.M.	9/9	Base of Unit II	535	75	460	6.2	0.7
9:00 A.M.	9/9	Unit III	375	270	105	8.3	0.7

Table 7 (continued)

Operation of Unit 1 - Unit 2 - Unit 3 (July 13 - September 30, 1971)

Point 1 = Raw Influent Point 2 = Unit 1 Effluent Point 3 = Unit 2 Effluent Point 4 = Unit 3 Effluent

Treatment Cycle - Leg A - September 9

Time	Point	TC	IC	pH	Temp.	COD_T	SS	VSS	DO
9:00 A.M.	1	725	80	10.1	29° C.	2700	142	136	6.5
	2	540	70	8.3	29	1690	70	53	2.1
	3	405	110	7.5	29	1360	280	280	1.8
	4	345	270	8.6	29	2360	-	2220	0.3
10:00 A.M.	2	545	75	8.0	30	1810	118	84	2.4
	3	420	75	7.4	30	1310	60	58	1.2
	4	390	145	7.8	30	1100	178	148	0.4
11:00 A.M.	2	520	80	7.8	31	1910	120	80	1.8
	3	430	75	7.4	31	1410	94	72	0.8
	4	280	105	7.4	31	1100	167	147	0.4
12:00 P.M.	1	560	75	8.6	32	3170	282	214	4.2
	2	440	75	7.3	32	2120	138	108	1.0
	3	340	95	7.0	32	1650	102	88	0.7
	4	240	130	7.6	32	1240	47	39	0.4
1:00 P.M.	2	575	80	7.8	32	2100	147	140	0.9
	3	445	75	7.2	32	1380	97	74	0.7
	4	420	70	7.5	32	1210	35	30	0.5
2:00 P.M.	2	490	75	7.6	32	2170	76	73	0.7
	3	430	65	7.4	32	1260	62	58	0.8
	4	270	95	7.0	32	1220	21	9	0.4
3:00 P.M.	1	580	85	8.4	32	1620	53	35	2.1
	2	470	95	7.6	32	2080	50	48	0.9
	3	380	75	7.2	32	1620	44	40	0.4
	4	240	125	7.2	32	1170	19	17	0.3

Regeneration - Leg B - September 9

Time	Point	TC	IC	pH	DO
9:00 A.M.	Base of Unit II	510	95	6.1	0.7

Table 7 (continued)

Operation of Unit 1 - Unit 2 - Unit 3 (July 13 - September 30, 1971)

Point 1 = Raw Influent Point 2 = Unit 1 Effluent Point 3 = Unit 2 Effluent Point 4 = Unit 3 Effluent

Treatment Cycle - Leg B - September 13

Time	Point	TC	IC	TOC	pH	COD_T	SS	VSS	DO
9:00 A.M.	1	1500	70	1430	10.6	3340	325	315	4.8
	2	260	70	190	9.8	734	154	108	1.6
	3	405	190	215	7.6	1110	300	287	1.4
	4	350	215	135	7.8	685	203	178	0.7
10:00 A.M.	2	345	65	280	8.2	1040	123	123	4.8
	3	255	95	160	7.8	735	54	48	4.1
	4	295	150	145	7.6	850	49	46	2.4
11:00 A.M.	2	465	60	405	8.6	1630	154	130	4.7
	3	320	75	245	7.9	945	33	20	4.0
	4	260	80	180	7.8	710	36	32	3.2
12:00 P.M.	1	755	100	655	9.5	2740	86	66	8.8
	2	520	65	455	9.7	1750	148	144	8.5
	3	355	85	270	8.2	1440	23	21	2.1
	4	320	80	240	7.5	1090	12	10	3.1
1:00 P.M.	2	575	70	505	9.7	2100	72	44	6.7
	3	480	85	395	8.4	1530	28	23	2.5
	4	425	80	345	7.5	1490	36	34	2.8
2:00 P.M.	2	600	75	525	10.1	2200	78	75	5.3
	3	475	80	395	8.7	1510	23	21	2.4
	4	415	125	290	7.8	1370	240	216	1.7
3:00 P.M.	1	990	70	920	10.8	3340	156	150	6.0
	2	590	75	515	10.3	2000	92	88	7.8
	3	460	80	390	8.5	1470	43	38	1.4
	4	405	135	270	7.7	1130	160	160	1.7

Regeneration - Leg A - September 13

Time	Date	Point	TC	IC	TOC	pH	DO
9:00 A.M.	-	Base of Unit II	-	-	-	-	-
2:00 Noon	9/13	Unit III	330	280	50	8.2	4.8
9:00 A.M.	9/14	Base of Unit II	535	130	405	6.5	0.4
9:00 A.M.	9/14	Unit III	275	220	55	7.1	4.6

Table 7 (continued)

Operation of Unit 1 - Unit 2 - Unit 3 (July 13 - September 30, 1971)

Point 1 = Raw Influent Point 2 = Unit 1 Effluent Point 3 = Unit 2 Effluent Point 4 = Unit 3 Effluent

Treatment Cycle - Leg A - September 14

Time	Point	TC	IC	TOC	pH	Temp.	COD_T	SS	VSS	DO
9:00 AM	1	640	75	565	9.8	30° C.	2180	97	76	4.4
	2	495	70	425	9.2	30	1490	110	110	6.8
	3	495	185	310	7.2	30	1250	132	114	3.6
	4	415	205	210	7.5	30	1050	346	340	1.8
10:00 A.M.	2	475	60	415	7.6	30	1460	224	104	6.4
	3	455	155	300	7.0	30	1180	135	123	0.8
	4	455	150	305	6.8	30	1020	308	304	0.4
11:00 A.M.	2	500	65	435	7.8	30	1560	130	128	5.5
	3	400	105	295	7.3	30	1020	57	54	0.9
	4	415	200	215	7.2	30	975	190	135	0.6
12:00 P.M.	1	625	105	520	8.5	31	2050	162	142	5.5
	2	525	80	445	7.5	31	1670	186	162	5.7
	3	475	65	410	7.5	31	1020	51	46	1.2
	4	425	70	355	7.2	31	871	81	77	1.0
1:00 P.M.	2	535	70	465	7.8	31	1770	123	118	4.7
	3	395	65	330	7.1	31	1180	94	83	0.9
	4	335	80	255	6.9	31	900	39	32	0.8
2:00 P M.	2	570	80	490	8.2	31	2000	192	192	4.9
	3	410	75	335	7.5	31	1150	47	44	1.8
	4	355	75	280	7.1	31	975	40	37	1.8
3:00 P.M.	1	745	95	650	9.1	31	2410	143	128	6.7
	2	575	80	495	9.2	31	1820	215	205	5.5
	3	415	70	345	7.8	31	1150	61	56	2.8
	4	345	75	260	7.0	31	1080	51	50	1.7

Regeneration - Leg B - September 14

Time	Point	TC	IC	TOC	pH	DO
9:00 A.M.	Base of Unit II	515	75	440	7.2	5.1
12:00 Noon	Unit III	435	101	334	6.6	4.1
9:00 A.M.	Base of Unit II	430	90	340	7.2	1.2
9:00 A.M.	Unit III	275	195	80	7.6	2.4

Table 7 (continued)

Operation of Unit 1 - Unit 2 - Unit 3 (July 13 - September 30, 1971)

Point 1 = Raw Influent Point 2 = Unit 1 Effluent Point 3 = Unit 2 Effluent Point 4 = Unit 3 Effluent

Treatment Cycle - Leg B - September 15

Time	Point	TC	IC	TOC	pH	Temp.	COD_T	SS	VSS	DO
10:00 A.M.	2	570	75	495	6.8	31° C.	1750	156	134	1.2
	3	400	120	280	6.6	31	1140	216	183	0.8
	4	310	195	115	7.4	31	570	167	150	0.6
11:00 A.M.	2	700	90	610	9.5	31	2380	175	170	7.5
	3	535	115	420	7.8	31	1600	119	98	0.4
	4	415	180	235	7.3	31	955	114	89	0.4
12:00 P.M.	1	550	85	465	9.5	32	1860	248	240	8.1
	2	700	9.5	605	7.9	32	2320	178	160	8.0
	3	545	105	440	7.9	32	1550	47	47	0.5
	4	470	100	370	6.7	32	1340	220	208	2.0
1:00 P.M.	2	710	100	610	9.2	32	2300	170	156	7.2
	3	545	110	535	8.5	32	1630	70	70	0.3
	4	485	110	475	6.9	32	1340	90	88	0.8
2:00 P.M.	2	705	110	595	8.8	32	2140	178	174	6.7
	3	610	105	505	7.8	32	1960	165	151	0.5
	4	505	105	400	6.5	32	1960	130	101	0.6
3:00 P.M.	1	640	95	545	9.4	32	2720	210	166	8.1
	2	710	95	615	9.8	32	2120	127	125	7.8
	3	535	90	445	8.2	32	1910	204	161	0.5
	4	460	85	375	6.2	32	1450	157	138	0.4

Regeneration - Leg A - September 15

Time	Point	TC	IC	TOC	pH	DO
9:00 A.M.	Base of Unit II	545	65	480	6.2	1.1
12:00 Noon	Unit III	270	100	170	7.1	0.4
9:00 A.M.	Base of Unit II	515	105	410	6.3	1.4
9:00 A.M.	Unit III	265	205	60	6.9	2.8

Table 7 (continued)

Operation of Unit 1 - Unit 2 - Unit 3 (July 13 - September 30,1971)

Point 1 = Raw Influent Point 2 = Unit 1 Effluent Point 3 = Unit 2 Effluent Point 4 = Unit 3 Effluent

Treatment Cycle - Leg A - September 16

Time	Point	TC	IC	TOC	pH	Temp. °C.	COD_T	SS	VSS	DO
9:00 A.M.	1	500	90	410	8.1	30	1440	43	43	7.5
	2	570	80	490	9.2	30	2320	95.6	83	7.8
	3	535	125	410	7.5	30	1328	113	106	1.1
	4	455	215	240	7.4	30	904	149	123	0.9
10:00 A.M.	2	570	85	495	8.8	30	80	56	53	7.2
	3	485	110	375	6.6	30	1360	72.5	72.5	1.2
	4	505	180	325	6.7	30	1120	81	95	0.7
11:00 A.M.	2	575	75	500	8.3	31	1864	98.5	97	7.6
	3	465	105	360	6.9	31	1328	73	59	1.0
	4	445	170	275	7.1	31	1120	71	69	0.9
12:00 P.M.	1	675	100	575	7.8	32	1888	150	117	8.3
	2	475	100	375	9.7	32	1168	104	80	8.6
	3	580	85	495	6.1	32	1840	100	100	0.5
	4	455	140	315	6.7	32	1008	63	62	2.3
1:00 P.M.	2	600	85	515	8.8	32	1840	132	120	8.0
	3	570	90	480	7.0	32	1224	67	66	1.9
	4	525	105	420	6.5	32	1140	86	78	2.3
2:00 P.M.	2	620	85	535	8.9	32	1888	122	100	8.1
	3	470	95	375	7.1	32	1304	66	59	
	4	425	105	420	6.4	32	1040	55	51	
3:00 P.M.	1	615	80	535	8.5	32	2000	132	108	7.8
	2	625	85	540	9.1	32	1920	153	106	9.2
	3	460	85	375	7.2	32	1384	100	93	0.7
	4	420	95	325	6.2	32	1040	69	68	1.6

Regeneration - Leg B - September 16

Time	Date	Point	TC	IC	TOC	pH	DO
9:00 A.M.	9/16	Base of Unit II	610	105	505	6.8	0.7
12:00 Noon	9/16	Unit III	370	70	300	6.8	1.3
9:00 A.M.	9/17	Base of Unit II	615	165	450	6.7	1.8
9:00 A.M.	9/17	Unit III	305	175	130	7.3	2.7

Table 7 (continued)

Operation of Unit 1 - Unit 2 - Unit 3 (July 13 - September 30, 1971)

Point 1 = Raw Influent Point 2 = Unit 1 Effluent Point 3 = Unit 2 Effluent Point 4 = Unit 3 Effluent

Treatment Cycle - Leg B - September 17

Time	Point	TC	IC	TOC	pH	Temp.	COD_T	SS	VSS	DO
9:00 A.M.	1	625	55	570	9.8	29° C.	2216	128	100	7.4
	2	585	80	505	9.0	29	2000	170	160	8.1
	3	655	195	460	7.8	29	1984	297	145	0.8
	4	655	280	575	7.2	29	1488	165	134	1.4
10:00 A.M.	2	580	75	505	8.7	30	1968	160	150	7.4
	3	645	150	495	7.7	30	2480	153	130	0.8
	4	675	315	360	7.4	30	1440	97	94	1.2
11:00 A.M.	2	605	80	525	8.4	32	2000	146	132	7.0
	3	550	105	445	7.1	32	1600	80	55	0.8
	4	500	130	370	7.1	32	1200	48	47	0.9
12:00 P.M.	1	605	50	555	8.5	32	2024	140	120	0.6
	2	585	75	510	8.2	32	2296	174	154	8.0
	3	585	80	445	6.9	32	1440	40	33	0.9
	4	470	105	375	7.3	32	1200	47	44	0.7
1:00 P.M.	2	585	60	525	8.9	32	2104	146	82	7.1
	3	545	65	480	7.4	32	1488	40	36	0.9
	4	475	95	380	7.4	32	1304	34	24	0.9

Regeneration - Leg A - September 17

Time	Point	TC	IC	pH	DO
9:00 A.M.	Base of Unit II	620	95	6.8	4.4
12:00 Noon	Unit III	225	75	6.7	1.4

Table 7 (continued)

Operation of Unit 1 - Unit 2 - Unit 3 (July 13 - September 30, 1971)

Point 1 = Raw Influent Point 2 = Unit 1 Effluent Point 3 = Unit 2 Effluent Point 4 = Unit 3 Effluent

Treatment Cycle - Leg A - September 20

Time	Point	TC	IC	TOC	pH	Temp.	COD_T	SS	VSS	DO
9:00 A.M.	1	515	70	445	9.7	29° C.	-	-	-	2.9
	2	410	115	295	8.4	29	744	130	110	1.2
	3	450	145	305	8.3	29	1008	90	80	0.8
	4	490	225	265	7.2	29	824	63	60	0.9
10:00 A.M.	2	370	120	250	8.3	29	-	-	-	0.6
	3	375	120	255	8.0	29	-	-	-	0.8
	4	405	160	245	7.3	29	-	-	-	0.7
11:00 A.M.	2	365	125	240	7.8	29	880	143	120	1.7
	3	370	135	235	7.4	29	824	93	87	0.8
	4	400	165	235	7.2	29	800	57	53	0.5
12:00 P.M.	1	660	75	585	8.6	30	-	-	-	3.5
	2	415	115	300	7.6	30	-	-	-	1.9
	3	385	130	255	7.5	30	-	-	-	0.8
	4	395	175	220	7.5	30	-	-	-	0.7
1:00 P.M.	2	375	135	240	7.7	30	-	-	-	2.5
	3	360	165	195	7.2	30	-	-	-	1.0
	4	410	120	290	7.4	30	-	-	-	0.8
2:00 P.M.	2	455	115	340	8.0	31	928	160	155	2.1
	3	340	110	230	7.4	31	880	150	150	0.9
	4	320	120	200	7.3	31	448	194	89	0.4
3:00 P.M.	1	840	100	740	7.9	31	-	-	-	4.7
	2	490	110	380	7.8	31	-	-	-	2.6
	3	360	115	245	7.5	31	-	-	-	0.7
	4	305	105	200	7.6	31	-	-	-	0.4

Regeneration - Leg B - September 20

Time	Date	Point	TC	IC	TOC	pH	DO
9:00 A.M.	9/20	Base of Unit II	-	-	-	-	-
12:00 Noon	9/20	Unit III	350	220	130	7.0	3.6
9:00 A.M.	9/21	Base of Unit II	565	130	435	6.6	1.4
9:00 A.M.	9/21	Unit III	305	260	45	7.6	4.4

Table 7 (continued)

Operation of Unit 1 - Unit 2 - Unit 3 (July 13 - September 30, 1971)

Point 1 = Raw Influent Point 2 = Unit 1 Effluent Point 3 = Unit 2 Effluent Point 4 = Unit 3 Effluent

Treatment Cycle - Leg B - September 21

Time	Point	TC	IC	TOC	pH	Temp.	COD_T	SS	VSS	DO
9:00 A.M.	1	630	70	560	9.4	29° C.	1760	90	84	9.5
	2	580	85	495	7.8	29	1544	285	280	0.4
	3	815	450	365	7.4	29	1304	234	230	0.4
	4	505	270	235	7.8	29	824	135	126	0.5
10:00 A.M.	2	540	80	460	7.6	30° C.	-	-	-	1.0
	3	650	245	405	7.4	30	-	-	-	0.7
	4	655	380	275	7.4	30	-	-	-	0.5
11:00 A.M.	2	590	85	505	7.5	30	1544	285	285	0.9
	3	545	120	425	7.2	30	1384	190	190	0.5
	4	605	170	435	7.0	30	960	74	70	0.4
12:00 P.M.	1	585	110	475	7.6	31	1968	178	145	8.0
	2	575	90	485	7.4	31	-	-	-	0.8
	3	575	100	475	7.2	31	-	-	-	0.4
	4	500	135	365	6.8	31	-	-	-	0.6
1:00 P.M.	2	600	85	515	7.3	32	1784	1080	343	1.2
	3	540	90	450	7.1	32	1120	150	120	0.4
	4	480	105	475	6.4	32	824	86	48	0.5
2:00 P.M.	2	585	90	495	7.8	32	-	-	-	1.6
	3	565	110	455	7.4	32	-	-	-	0.7
	4	495	110	385	7.3	32	-	-	-	0.6
3:00 P.M.	1	545	65	480	8.1	32	1328	246	226	6.5
	2	615	85	530	7.5	32	-	-	-	1.4
	3	565	100	465	7.2	32	-	-	-	0.4
	4	490	95	395	7.3	32	-	-	-	0.4

Regeneration - Leg A - September 21

Time	Date	Point	TC	IC	TOC	pH	DO
9:00 A.M.	9/21	Base of Unit II	645	105	540	7.1	0.4
12:00 Noon	9/21	Unit III	305	150	155	7.0	1.4
9:00 A.M.	9/22	Base of Unit II	310	180	130	6.9	1.8
9:00 A.M.	9/22	Unit III	535	90	445	7.2	4.6

Flow from Treatment System = 65,390 GALLONS.

Table 1 (continued)

Operation of Unit 1 - Unit 2 - Unit 3 (July 13 - September 30, 1971)

Point 1 = Raw Influent Point 2 = Unit 1 Effluent Point 3 = Unit 2 Effluent Point 4 = Unit 3 Effluent

Treatment Cycle - Leg B - September 23

Time	Point	TC	pH	Temp.	COD_T	SS	VSS	DO
9:00 A.M.	1	890	10.4	29° C.	2990	158	152	9.2
	2	565	8.2	29	1710	465	465	0.7
	3	465	7.1	29	1600	130	120	0.8
	4	405	7.2	29	735	460	420	0.3
10:00 A.M.	2	560	7.8	30	-	-	-	0.9
	3	535	7.2	30	-	-	-	0.4
	4	475	7.4	30	-	-	-	0.5
11:00 A.M.	2	580	7.4	31	2180	390	385	0.8
	3	530	7.2	31	1840	240	220	0.6
	4	455	7.0	31	1130	127	122	0.5
12:00 P.M.	1	645	8.2	31	1830	155	130	8.9
	2	560	7.3	31	-	-	-	0.8
	3	610	7.1	31	-	-	-	0.8
	4	485	6.9	31	-	-	-	0.7
1:00 P.M.	2	600	7.8	32	1810	365	340	0.9
	3	590	7.4	32	1650	270	266	0.4
	4	500	7.5	32	1280	206	190	0.6
2:00 P.M.	2	605	7.9	32	-	-	-	0.8
	3	570	7.5	32	-	-	-	0.4
	4	520	7.5	32	-	-	-	0.3
3:00 P.M.	1	680	8.2	32	2230	142	135	7.4
	2	540	7.4	32	-	-	-	0.9
	3	500	7.2	32	-	-	-	0.4
	4	535	7.0	32	-	-	-	0.3

Regeneration -LEG A - September 23

Time	Date	Point	TC	IC	TOC	pH	DO
9:00 A.M.	9/23	Base of Unit II	560	62	498	6.9	0.3
12:00 Noon	9/23	Unit III	455	120	335	6.8	0.9
9:00 A M.	9/24	Base of Unit II	-	-	-	-	-
9:00 A.M.	9/24	Unit III	-	-	-	-	-

Flow from Treatment System = 59,220 Gallons.

Table 7 (continued)

Operation of Unit 1 - Unit 2 - Unit 3 (July 13 - September 30, 1971)

Point 1 = Raw Influent Point 2 = Unit 1 Effluent Point 3 = Unit 2 Effluent Point 4 = Unit 3 Effluent

Treatment Cycle - Leg A - September 22

Time	Point	TC	IC	TOC	pH	Temp.	COD_T	SS	VSS	DO
9:00 A.M.	1	1430	140	1290	8.7	29° C.	0	330	282	7.1
	2	460	95	365	7.6	29	1864	370	330	2.4
	3	420	130	290	7.3	29	1144	212	160	0.4
	4	325	180	145	7.4	29	696	205	137	0.5
10:00 A.M.	2	490	100	390	7.8	30	-	-	-	2.2
	3	390	100	290	7.7	30	-	-	-	1.1
	4	350	105	245	7.7	32	-	-	-	0.8
11:00 A.M.	2	545	90	455	8.2	32	1656	455	385	2.0
	3	430	100	330	7.4	32	1360	273	210	0.9
	4	355	100	255	7.5	32	936	210	180	0.7
12:00 P.M.	1	745	105	640	8.4	32	2480	213	140	6.4
	2	600	75	525	8.0	32	-	-	-	2.3
	3	500	95	405	7.5	32	-	-	-	1.0
	4	420	90	430	7.6	32	-	-	-	0.8
1:00 P.M.	2	620	75	545	7.9	32	1440	175	137	1.7
	3	510	95	415	7.5	32	-	-	-	0.9
	4	440	90	350	7.4	32	-	-	-	0.7
2:00 P.M.	2	625	70	555	7.7	32	2184	570	450	1.4
	3	510	95	415	7.1	32	1520	250	175	0.8
	4	450	90	460	7.2	32	1280	143	110	0.5
3:00 P.M.	1	690	105	585	7.9	32	2664	273	226	5.8
	2	645	65	580	7.6	32	-	-	-	2.1
	3	515	95	420	7.1	32	-	-	-	0.4
	4	480	100	380	7.2	32	-	-	-	0.5

Regeneration - Leg B - September 22

Time	Date	Point	TC	IC	TOC	pH	DO
9:00 A.M.	9/22	Base of Unit II	570	120	450	7.4	1.1
12:00 Noon	9/22	Unit III	410	165	245	6.8	2.3
9:00 A.M.	9/23	Base of Unit II	590	125	465	6.4	0.5
9:00 A.M.	9/23	Unit III	385	132	253	7.2	0.4

Flow from Treatment System - 75,230 gallons

Table 7 (continued)

Operation of Unit 1 - Unit 2 - Unit 3 (July 13 - September 30, 1971)

Point 1 = Raw Influent Point 2 = Unit 1 Effluent Point 3 = Unit 2 Effluent Point 4 = Unit 3 Effluent

Treatment Cycle - Leg A - September 24

Time	Point	TC	IC	TOC	pH	Temp.	COD_T	SS	VSS	DO
9:00 A.M.	1	1270	180	1090	8.3	29° C.	3330	138 138	118	6.2
	2	480	100	380	7.5	29	1630	245 245	220	3.1
	3	460	170	290	7.3	29	1200	350	330	0.4
	4	380	210	170	7.4	29	1270	286	230	0.3
10:00 A.M.	2	480	105	375	7.6	30	-	-	-	3.6
	3	400	110	290	7.7	30	-	-	-	0.6
	4	340	110	230	7.5	30	-	-	-	1.0
11:00 A.M.	2	490	95	395	7.8	31	2200	290	234	1.0
	3	400	105	295	7.2	31	1470	340	285	0.7
	4	350	100	250	7.3	31	945	82	43	0.8
12:00 P.M.	1	720	115	605	8.1	32	3330	316	223	8.1
	2	530	105	425	7.6	32	-	-	-	3.8
	3	470	90	380	7.7	32	-	-	-	0.8
	4	410	95	315	7.5	32	-	-	-	0.7
1:00 P.M.	2	605	85	520	7.9	32	2410	223	216	2.9
	3	530	90	440	7.4	32	1920	192	182	1.0
	4	420	100	320	7.5	32	1680	183	180	1.0
2:00 P.M.	2	635	75	560	7.7	32	-	-	-	2.7
	3	530	85	445	7.4	32	-	-	-	0.9
	4	470	90	380	7.4	32	-	-	-	0.7
3:00 P.M.	1	695	85	610	8.4	32	3330	333	237	7.4
	2	655	80	575	7.3	32	-	-	-	2.3
	3	550	95	455	7.4	32	-	-	-	0.7
	4	475	105	370	7.4	32	-	-	-	0.6

Regeneration - Leg B - September 24

Time	Date	Point	TC	IC	TOC	pH	DO
9:00 A.M.	9/24	Base of Unit II	550	130	420	7.3	1.7
12:00 Noon	9/24	Unit III	400	185	215	6.9	3.1

Flow from Treatment System - 26,250 Gallons

Table 7 (continued)

Operation of Unit 1 - Unit 2 - Unit 3 (July 13 - September 30, 1971)

Point 1 = Raw Influent Point 2 = Unit 1 Effluent Point 3 = Unit 2 Effluent Point 4 = Unit 3 Effluent

Treatment Cycle - Leg B - September 27

Time	Point	TC	IC	TOC	pH	Temp.	COD_T	SS	VSS	DO
						°C.				
9:00 A.M.	1	1700	175	-	9.4	29	3330	390	360	12.2
	2	795	125	-	7.8	29	2940	140	126	1.5
	3	540	105	-	7.2	29	1960	290	280	1.2
	4	555	115	-	6.8	29	1640	260	415	0.8
10:00 A.M.	2	780	130	650	7.7	29	-	-	-	1.8
	3	740	285	455	7.3	29	-	-	-	0.9
	4	505	235	270	6.9	29	-	-	-	0.7
11:00 A.M.	2	740	130	-	7.8	30	2540	175	172	1.9
	3	740	155	-	7.5	30	2410	92	84	0.4
	4	730	245	-	7.6	30	2090	177	172	0.5
12:00 P.M.	1	975	180	-	8.7	30	3330	447	412	7.9
	2	790	150	-	7.7	30	-	-	-	2.1
	3	690	135	-	7.4	30	-	-	-	0.8
	4	620	130	-	7.4	30	-	-	-	0.8
1:00 P.M.	2	850	150	700	7.8	30	3010	306	250	1.4
	3	755	155	600	7.6	30	2440	120	116	0.4
	4	650	150	500	7.4	30	2110	106	102	0.5
2:00 P.M.	2	850	165	-	7.6	31	-	-	-	1.3
	3	775	175	-	7.1	31	-	-	-	0.4
	4	640	150	-	7.2	31	-	-	-	0.4
3:00 P.M.	1	860	145	-	8.6	31	3030	220	212	6.1
	2	720	130	-	7.7	31	-	-	-	1.3
	3	685	165	-	7.3	31	-	-	-	0.4
	4	520	185	-	7.1	31	-	-	-	0.4

Regeneration - Leg A - September 27

Time	Date	Point	TC	IC	TOC	pH	DO
9:00 A.M.	-	Base of Unit II	-	-	-	-	-
12:00 Noon	9/27	Unit III	385	240	145	6.7	1.3
9:00 A.M.	9/28	Base of Unit II	423	110	313	6.6	0.4
9:00 A.M.	9/28	Unit III	360	165	195	7.0	2.3

Flow from Treatment System - 71,600 Gallons

Table 7 (continued)

Operation of Unit 1 - Unit 2 - Unit 3 (July 13 - September 30, 1971)

Point 1 = Raw Influent Point 2 = Unit 1 Effluent Point 3 = Unit 2 Effluent Point 4 = Unit 3 Effluent

Treatment Cycle - Leg A - September 28

Time	Point	TC	IC	pH	COD_T	SS	VSS	DO
9:00 A.M.	1	820	130	7.2	2880	224	210	12.1
	2	835	160	7.9	2900	410	395	1.2
	3	650	165	7.1	2310	285	280	0.6
	4	565	185	6.5	1640	258	252	0.5
10:00 A.M.	2	815	155	7.6	-	-	-	1.0
	3	645	165	7.2	-	-	-	0.5
	4	570	150	6.8	-	-	-	0.4
11:00 A.M.	2	790	165	7.5	2780	415	400	0.8
	3	660	155	7.1	2050	208	205	0.4
	4	555	155	6.6	1590	-	-	0.4
12:00 P.M.	1	730	120	6.8	3340	173	170	8.6
	2	845	165	7.4	-	-	-	1.0
	3	675	165	7.2	-	-	-	0.5
	4	530	150	6.4	-	-	-	0.6
1:00 P.M.	2	685	155	7.2	2620	350	340	1.5
	3	660	160	7.0	1970	192	175	0.8
	4	535	155	6.9	1790	160	150	0.9
2:00 P.M.	2	660	145	7.3	-	-	-	1.1
	3	615	150	7.1	-	-	-	0.7
	4	545	150	6.8	-	-	-	0.7

Regeneration - Leg B - September 28

Time	Date	Point	TC	IC	TOC	pH	DO
9:00 A.M.	9/28	Base of Unit II	440	105	335	6.6	0.1
12:00 Noon	9/28	Unit III	420	180	240	6.8	1.6
9:00 A.M.	9/29	Base of Unit II	405	170	235	6.9	0.9
9:00 A.M.	9/29	Unit III	385	185	200	7.1	1.8

Flow from Treatment System - 79,360 Gallons.

Table 7 (continued)

Operation of Unit 1 - Unit 2 - Unit 3 (July 13 - September 30, 1971)

Point 1 = Raw Influent Point 2 = Unit 1 Effluent Point 3 = Unit 2 Effluent Point 4 = Unit 3 Effluent

Treatment Cycle - Leg B - September 29

Time	Point	TC	IC	TOC	pH	Temp.	COD_T	SS	VSS	DO
						°C.				
9:00 A.M.	1	875	155	720	8.6	29	3330	447	360	5.6
	2	720	160	560	7.4	29	1770	425	355	2.3
	3	710	150	560	7.0	29	2310	530	470	0.7
	4	645	170	475	7.1	29	1920	228	188	0.4
10:00 A.M.	2	745	140	605	7.6	30	-	-	-	3.1
	3	685	155	530	7.2	30	-	-	-	0.8
	4	640	175	465	7.1	30	-	-	-	0.7
11:00 A.M.	2	785	170	615	7.4	30	2020	968	700	2.8
	3	660	155	505	7.0	30	1560	323	228	0.7
	4	605	150	455	6.9	30	1280	97	63	0.7
12:00 P.M.	1	855	150	705	8.7	31	1740	140	86	4.7
	2	725	165	560	7.1	31	-	-	-	1.8
	3	700	160	540	7.1	31	-	-	-	0.4
	4	655	170	485	7.0	31	-	-	-	0.5
1:00 P.M.	2	755	185	570	7.2	31	-	-	-	1.6
	3	680	170	510	7.0	31	-	-	-	0.4
	4	670	165	505	6.9	31	-	-	-	0.4
2:00P.M.	2	705	165	540	7.0	31	-	-	-	1.1
	3	640	150	490	7.1	31	-	-	-	0.3
	4	595	145	450	7.0	31	-	-	-	0.4
3:00 P.M.	1	800	140	660	8.2	31	3030	330	235	3.7
	2	710	145	565	7.3	31	1720	495	325	1.2
	3	700	155	545	7.1	31	1500	440	295	0.5
	4	615	150	465	7.1	31	1360	210	133	0.6

Flow from Treatment System - 33,800 Gallons

Table 7 (continued)

Operation of Unit 1 - Unit 2 - Unit 3 (July 13 - September 30, 1971)

Point 1 = Raw Influent Point 2 = Unit 1 Effluent Point 3 = Unit 2 Effluent Point 4 = Unit 3 Effluent

Treatment Cycle - Leg A - September 30

Time	Point	TC	IC	TOC	pH	Temp.	COD_T		SS	VSS	DO
9:00 A.M.	1	870	165	705	9.5	29° C.	3330		70	48	8.3
	2	675	150	525	7.9	29	1830	18	185	100	2.5
	3	530	150	480	7.2	29	1590		43	23	0.9
	4	540	185	355	7.0	29	1280		70	38	0.8
10:00 A.M.	2	640	155	485	7.6	30° C.	-		-	-	1.8
	3	520	165	355	7.1	30	-		-	-	0.7
	4	515	165	350	7.0	30	-		-	-	0.6
11:00 A.M.	2	635	140	495	7.9	32° C.	2630		115	100	1.6
	3	500	175	325	7.2	32	1720		120	87	0.4
	4	485	185	300	6.8	32	1410		36	22	0.5
12:00 P.M.	1	765	145	620	8.7	32	2760		43	32	7.2
	2	585	155	430	7.4	32	-		-	-	1.7
	3	570	150	420	7.0	32	-		-	-	0.6
	4	510	160	350	6.8	32	-		-	-	0.5
1:00 P.M.	2	610	135	475	7.3	32	1986		90	65	1.4
	3	560	145	415	7.0	32	1870	70	70	50	0.5
	4	525	165	360	6.7	32	1380		10	7	0.4
2:00 P.M.	2	615	140	475	7.0	32	--		-	-	1.0
	3	540	150	390	7.0	32	-		-	-	0.4
	4	505	155	350	6.8	32	-		-	-	0.5

Flow from Treatment System - 22,590 Gallons.

APPENDIX B

APPENDIX B

Table 1

Operation of Pilot Anaerobic Filter Series No. 1 (Sept. 16-18, 1970)

I = Influent , E = Effluent

September 16

	9:00 A.M.		10:00 A.M.		11:00 A.M.		12:00 A.M.		1:00 P.M.		2:00 P.M.		3:00 P.M.	
	I	E	I	E	I	E	I	E	I	E	I	E	I	E
Temp. °C.	27.5	27.5	28	28	30	29	30.5	30.5	30.5	30	30	30	30	30
pH	7.4	8.3	7.9	8.3	7.6	8.2	8.2	8.0	8.1	7.9	8.4	7.7	8.3	7.7
D.O. mg/l	-	-	-	-	..	-	-	-	-	-	-	-	-	-
Total Carbon mg/l	250	130	410	190										
Inorganic Carbon mg/l	70	120	80	110										
Total Org. Carbon mg/l	180	10	330	80										
% Reduction TOC	94.5		95.7											
Total COD mg/l			1875	625			1965	712			2274	622		
% Reduction COD			66.6				63.6				72.6			
SS mg/l			462	240			450	188			444	150		
VSS mg/l			454	217			420	188			406	140		

APPENDIX B

Table 1 (cont.)

Operation of Pilot Anaerobic Filter Series No. 1 (September 16-18, 1970)

September 17

I = Influent E = Effluent

	9:00 A.M.		10:00 A.M.		11:00 A.M.		12:00 A.M.		1:00 P.M.		2:00 P.M.	
	I	E	I	E	I	E	I	E	I	E	I	E
Temp. °C.	27	24.5	31.5	30.5	31	31	28.5	29	27.5	26	30	29
pH	6.8	6.5	6.7	6.6	6.7	6.5	6.4	6.5	6.9	6.5	7.1	6.6
D.O. mg/l			0.3	0.2	0.3	0.3	0.3	0.3	0.4	0.3	0.3	0.3
Total Carbon mg/l	620	505	720	545	730	620	710	685	700	605	695	610
Inorganic Carbon mg/l	110	120	95	115	95	115	70	115	85	130	100	115
Total Org. Carbon mg/l	510	385	625	430	635	565	640	570	615	475	595	495
% Reduction TOC	24.5		31.2		20.2		11		23		17.7	
Total COD mg/l			1875	625			1965	712			2274	622
% Reduction COD			66.6				63.6				72.6	
SS mg/l			462	240			450	188			444	150
VSS mg/l			454	217			420	188			406	140

Table 1 (cont.)

Operation of Pilot Anaerobic Filter Series No. 1 (September 16-18, 1970)

September 18

I = Influent E = Effluent

	9:00 A.M.		10:00 A.M.		11:00 A.M.		12:00 A.M.		1:00 P.M.		2:00 P.M.	
	I	E	I	E	I	E	I	E	I	E	I	E
Temp. °C.	31	27	30	28	30	29	31	28			33	31
pH	7.8	6.6	7.7	6.6	7.5	6.6	7.4	6.4			7.1	6.3
D.O. mg/l	0	0	0.3	0.3	0.3	0.2	0.3	0.3			0.4	0.4
Total Carbon (mg/l)	470	400	490	385	475	390	645	430			730	515
Inorganic Carbon mg/l	180	150	150	155	155	150	150	200			130	155
Total Org. Carbon mg/l	290	250	340	230	320	240	495	230			600	360
% Reduction TOC	13.7		32.3		25		53.5				40	
Total COD mg/l			1833	1305			2304	1314			2184	1419
% Reduction COD			28.8				43				35	
SS mg/l			531	218			600	280			430	220
VSS mg/l			446	205			529	260			410	210

Table 2

Operation of Pilot Anaerobic Filter

Series No. 2 (September 24 - October 2, 1970)

I = Influent E = Effluent

	September 29						September 30									
	12:00 A.M.		1:00 P.M.		2:00 P.M.		10:00 A.M.		11:00 A.M.		12:00 A.M.		1:00 P.M.		2:00 P.M	
	I	E	I	E	I	E	I	E	I	E	I	E	I	E	I	E
Temp. °C.	30.5	30	31	30.5	30	30	30	28	30	29	31	29.5	31	31	32	31
pH	7.7	7.1	7.6	7.4	7.2	7.3	6.9	7.0	6.7	6.9	6.9	6.9	6.9	6.9	7.0	6.
Total Carbon mg/l	470	415	490	440	485	430	480	440	640	590	640	605	590	580	620	600
Inorganic Carbon mg/l	130	130	130	130	125	130	75	85	110	125	105	120	65	90	65	80
Total Org. Carbon mg/l	340	285	360	310	360	300	405	355	530	465	535	485	525	490	555	52(
% Reduction TOC	16.2		13.8		16.6											
Total COD mg/l	3105	2165	2605	2145			2200	1937			2107	3233			2217	205:
% Reduction COD	30		17.7				12				0				7.5	
SS mg/l	880	590	960	600			185	112			222	690			270	377
VSS mg/l	690	510	750	470			168	103			208	827			253	247

APPENDIX B

Table 2 (cont.)

Operation of Pilot Anaerobic Filter

Series No. 2 (September 24 - October 2, 1970)

I = Influent E = Effluent

	October 1												October 2							
	9:00 A.M.		10:00 A.M.		11:00 A.M.		12:00 A.M.		1:00 P.M.		2:00 P.M.		10:00 A.M.		12:00 A.M.		2:00 P	
	I	E	I	E	I	E	I	E	I	E	I	E	I	E	I	E	I	
Temp. °C.	29	27	29	29	30	20	30	29	31	30	30	29						
pH	7.1	7.0	7.2	7.2	7.2	7.2	7.2	7.2	7.2	7.2	7.2	7.2						
Total Org. Carbon mg/l	610	450	590	530	610	560	630	560	615	545	580	550						
% Reduction TOC	26.3		10.2		8.2		11.1		11.4		5.2							
Total COD mg/l			2218	1860			2410	1974			2560	2144	2460	2259	2380	2064	2157	2
% Reduction COD			16				7.8				16.5		8		13		0	
SS mg/l			190	140			257	190			277	195	243	268	246	168	330	
VSS mg/l			183	128			247	180			277	175	228	243	220	158	307	

Table 2

Operation of Pilot Anaerobic Filter

Series No. 2 (September 24 - October 2, 1970)

I = Influent E = Effluent

September 24

	11:00 A.M.		12:00 A.M.		1:00 P.M		2:00 P.M.	
	I	E	I	E	I	E	I	E
Temp. °C.	34	29.5	34	33.5	35	34.5	35	35
pH.	7.3	9.5	7.2	8.8	7.1	7.9	7.0	7.6
Total Carbon mg/l	480	235	460	280	590	325	620	340
Inorganic Carbon mg/l	120	160	105	130	85	110	80	95
Total Org. Carbon mg/l	360	75	355	150	505	215	540	245
% Reduction TOC	79.1		57.7		57.4		54.6	
Total COD mg/l			1916	897	2320	1107	2400	1257
% Reduction COD			53		52		47.5	
SS mg/l			357	174	485	193	425	190
VSS mg/l			343	166	450	188	405	170

APPENDIX B

Table 2 (cont.)

Operation of Pilot Anaerobic Filter

Series No. 2 (September 24 - October 2, 1970)

I = Influent E = Effluent

September 25

	9:00 A.M.		10:00 A.M.		11:00 A.M.		12:00 A.M.		1:00 P.M.		2:00 P.M.	
	I	E	I	E	I	E	I	E	I	E	I	E
Temp. °C.	33	31	34.5	33.5	35	34.5	35	34.5	32.5	32	34.5	34
pH	7.0	7.0	6.8	6.8	6.5	6.7	6.5	6.7	6.2	6.4	6.4	6.5
Total Carbon mg/l	490	320	500	395	515	420	515	430	485	425	505	425
Inorganic Carbon mg/l	95	95	80	100	70	75	60	75	35	50	40	55
Total Org. Carbon mg/l	395	225	420	295	445	345	455	355	450	375	465	370
% Reduction TOC	43		29.7		22.4		22		16.6		20.2	
Total COD mg/l			2613	1627			2907	2065			3333	2051
% Reduction COD			37.7				29.0				38.3	
SS mg/l			625	292			720	445			930	440
VSS mg/l			625	292			720	420			840	365

APPENDIX B

Table 2 (cont.)

Operation of Pilot Anaerobic Filter

Series No. 2 (September 24 - October 2, 1970)

I = Influent E = Effluent

September 28

	10:00 A.M.		11:00 A.M.		12:00 A.M.		1:00 P.M.		2:00 P.M.	
	I	E	I	E	I	E	I	E	I	E
Temp. °C.	24.5	23	28.5	27.0	29.5	28.5	30.5	29.5	30.5	29.0
pH	7.2	6.2	7.5	6.4	7.5	6.7	7.5	6.8	7.5	6.9
Total Carbon mg/l	580	450	600	525	515	460	510	440	520	435
Inorganic Carbon mg/l	100	120	95	125	90	100	90	95	95	105
Total Org. Carbon mg/l	480	330	505	400	425	360	420	345	415	330
% Reduction TOC	31		20.7		15.3		18.4		20.4	
Total COD mg/l	3280	3120			3040	1870			2395	1470
% Reduction COD	5				38.5				38.6	
SS mg/l	1177	1300			900	550			558	220
VSS mg/l	1012	1113			850	483			500	203

1 Accession Number	2 Subject Field & Group	SELECTED WATER RESOURCES ABSTRACTS INPUT TRANSACTION FORM
W		

5 Organization

Palisades Industries, Inc.
Peace Dale, Rhode Island

6 Title

Anaerobic-Aerobic Treatment of Textile Wastes with Activated Carbon

10 Author(s)

Poon, Calvin, P.C.
and
Virgadamo, Philip P.

16 Project Designation

EPA - Grant Project 12090 EQO

21 Note

Environmental Protection Agency report number, EPA-R2-73-248, May 1973.

22 Citation

23 Descriptors (Starred First)

* Wastewater Treatment, * Industrial Wastes, * Textiles
* Activated Carbon, adsorption

25 Identifiers (Starred First)

* Biochemical Oxygen Demand, * Chemical Oxygen Demand,
* Total Organic Carbon

27 Abstract The operation of an anaerobic-aerobic bio-oxidation treatment system utilizing activated carbon was studied for 24 months at Palisades Industries, Peace Dale, Rhode Island. Biological oxidation and conversion of soluble organic waste constituents took place in the aerated basin operated as a mixed dispersed growth reactor without return sludge. Washed out solids from the aeration basin were filtered by a parallel set of activated carbon columns. The entrapped solids were then hydrolized when these columns were regenerated in place anaerobically. A second parallel set of carbon columns provided for additional removal of solids and soluble organics. However, the biological regeneration in these columns was carried out aerobically.

Both the Laboratory and the large scale pilot plant experiments revealed 1) good color removal; 2) oxidation of organic chemicals fed to the system; 3) major reduction in BOD and COD in the waste effluent stream; and 4) continued biological regeneration of the activated carbon; and 5) high degree of removal of suspended solids without conventional equipment. This study has demonstrated that waste streams from a typical cloth dyeing and finishing operation can be effectively treated using activated carbon coupled with biological regeneration. The advantages to this system are a result of the catalytic effect rendered by the activated carbon on difficult to degrade organic molecules and the small space requirements in respect to conventional treatment systems for an equivalent degree of treatment.

Abstractor Calvin P. C. Poon | Institution University of Rhode Island