United States
Environmental Protection
Agency

Environmental Monitoring
Systems Laboratory
Research Triangle Park NC 27711

EPA/600/4-82-042b
Revised
July 1986

Research and Development

EPA

Operations and Maintenance Manual for Precipitation Measurement Systems

EPA/600/4-82/042b
Revised
July 1986

Operations and Maintenance Manual for Precipitation Measurement Systems

By

L.E. Topol and S. Ozdemir
Environmental Monitoring and Services, Inc.
A Subsidiary of Combustion Engineering
Newbury Park, California 91320

Contract No. 68-02-4125

Revised July 1986

Berne I. Bennett, Project Officer
Performance Evaluation Branch
Quality Assurance Division
Research Triangle Park, North Carolina 27711

U.S. ENVIRONMENTAL PROTECTION AGENCY
Office of Research and Development
Environmental Monitoring Systems Laboratory
Research Triangle Park, North Carolina 27711

NOTICE

This document has been reviewed in accordance with U.S. Environmental Protection Agency policy and approved for publication. Mention of trade names or commercial products does not constitute endorsement or recommendation for use.

FOREWORD

Measurement and monitoring research efforts are designed to anticipate potential environmental problems, to support regulatory actions by developing an in-depth understanding of the nature and processes that impact health and the ecology, to provide innovative means of monitoring compliance with regulations and to evaluate the effectiveness of health and environmental protection efforts through the monitoring of long-term trends. The Environmental Monitoring Systems Laboratory, Research Triangle Park, North Carolina, is responsible for development of: environmental monitoring technology and systems; agency-wide quality assurance programs for air pollution measurement systems; and technical support to EPA's Office of Air, Noise and Radiation, Office of Toxic Substances, and Office of Enforcement. This manual has been developed to assist agencies which plan to make precipitation measurements. The standard operating procedures in this manual currently are EPA's recommended methods for precipitation monitoring. This manual, when used with the Quality Assurance Manual for Precipitation Measurement Systems, should be the basis for planning a precipitation monitoring effort.

John C. Puzak, Acting Director
Environmental Monitoring Systems Laboratory
Office of Research and Development

ACKNOWLEDGMENT

This report was prepared for the Environmental Monitoring Systems Laboratory, Research Triangle Park, North Carolina, under the direction of the Project Officer, Berne I. Bennett. Material in this manual is based on current EPA quality assurance procedures, air and water monitoring methodology, and procedures employed in the Electric Power Research Institute (EPRI) Acid Precipitation Study, the National Atmospheric Deposition Program (NADP), and the Multi-State Atmospheric Power Production Pollution Study (MAP3S). The authors wish to extend grateful appreciation to the contributions of the staff at Environmental Monitoring & Services, Inc. Newbury Park, California, and the many reviewers of the drafts of this document.

ABSTRACT

This manual presents techniques and procedures for field and laboratory operations associated with precipitation monitoring and analysis. The analyses given are those approved by the U.S. Environmental Protection Agency for acid precipitation. The methodology described will provide guidance for personnel and will maximize the quality as well as the quantity of data collected.

CONTENTS

Section		Page	Rev.	Date
1	INTRODUCTION	1	1	7/31/86
	1.1 COLLECTION SITES	2	1	7/31/86
	1.2 PARAMETERS AND ANALYTES GENERALLY MEASURED	2	1	7/31/86
	1.3 SAMPLING PERIODS, DEFINITION OF EVENT	3	1	7/31/86
	1.4 REFERENCES	4	1	7/31/86
2	FIELD OPERATIONS	1	1	7/31/86
	2.1 EQUIPMENT AND SUPPLIES	1	1	7/31/86
	2.1.1 Station Supplies	1	1	7/31/86
	2.1.2 Spare Parts	4	1	7/31/86
	2.1.3 Precipitation Collector Description	6	1	7/31/86
	2.1.4 Rain Gauge Description	8	1	7/31/86
	2.2 INSTALLATION AND ACCEPTANCE TESTS	9	1	7/31/86
	2.2.1 Precipitation Collector	9	1	7/31/86
	2.2.1.1 Installation	9	1	7/31/86
	2.2.1.2 Acceptance Tests	10	1	7/31/86
	2.2.2 Rain Gauge	12	1	7/31/86
	2.2.2.1 Installation	12	1	7/31/86
	2.2.2.2 Acceptance Tests	12	1	7/31/86
	2.3 EQUIPMENT CHECKS, MAINTENANCE AND TROUBLESHOOTING	14	1	7/31/86
	2.3.1 Precipitation Collector	14	1	7/31/86
	2.3.1.1 Routine Checks	14	1	7/31/86
	2.3.1.2 Special Calibration/ Maintenance	15	1	7/31/86
	2.3.1.3 Winter Maintenance	17	1	7/31/86
	2.3.2 Weighing Bucket Rain Gauge	18	1	7/31/86
	2.3.2.1 Routine Checks	18	1	7/31/86
	2.3.2.2 Calibrations	19	1	7/31/86
	2.3.2.3 Winter Maintenance	19	1	7/31/86

CONTENTS (Continued)

Section			Page	Rev.	Date
2	2.4	SAMPLE COLLECTION AND HANDLING	20	1	7/31/86
		2.4.1 Avoiding Contamination	20	1	7/31/86
		2.4.2 Sampling Schedules	21	1	7/31/86
		2.4.3 Collection and Handling Procedures	21	1	7/31/86
		2.4.3.1 Wet Buckets	22	1	7/31/86
		2.4.3.2 Plastic Bag Liners	23	1	7/31/86
		2.4.3.3 Bottles	25	1	7/31/86
	2.5	FIELD MEASUREMENTS	26	1	7/31/86
		2.5.1 Weighing Sample Containers	26	1	7/31/86
		2.5.1.1 Balance Specifications	26	1	7/31/86
		2.5.1.2 Procedure	27	1	7/31/86
		2.5.2 Specific Conductance Measurement	28	1	7/31/86
		2.5.2.1 Apparatus Requirements	28	1	7/31/86
		2.5.2.2 Procedure	28	1	7/31/86
		2.5.2.3 Conductivity Measurement Problems and Tests	31	1	7/31/86
		2.5.3 pH Measurement	32	1	7/31/86
		2.5.3.1 Apparatus and Equipment	32	1	7/31/86
		2.5.3.2 Procedure	33	1	7/31/86
		2.5.3.3 Electrode Problems and Tests	35	1	7/31/86
		2.5.4 Temperature	37	1	7/31/86
		2.5.4.1 Requirements	37	1	7/31/86
		2.5.4.2 Procedure	37	1	7/31/86
	2.6	SAMPLE IDENTIFICATION, PRESERVATION, STORAGE, AND SHIPMENT	37	1	7/31/86
		2.6.1 Background	37	1	7/31/86
		2.6.2 Procedure	38	1	7/31/86
		2.6.2.1 Weekly Cumulative Samples	39	1	7/31/86
		2.6.2.2 Daily, Event or Sequential Samples	39	1	7/31/86
		2.6.3 Field Blanks	39	1	7/31/86
		2.6.3.1 Buckets	40	1	7/31/86
		2.6.3.2 Bottles	40	1	7/31/86
	2.7	DOCUMENTATION	41	1	7/31/86
		2.7.1 Logbook	41	1	7/31/86
		2.7.2 Rain Gauge Charts	41	1	7/31/86
		2.7.3 Field Data Forms	41	1	7/31/86

CONTENTS (Continued)

Section		Page	Rev.	Date
2	2.8 QUALITY CONTROL	45	1	7/31/86
	2.8.1 Unknown or Quality Control Test Samples for the Field	45	1	7/31/86
	2.8.2 Site Visits/Audits	46	1	7/31/86
	2.8.3 Blind Samples for the Laboratory	47	1	7/31/86
	2.9 FIELD PROCEDURE SUMMARY	48	1	7/31/86
	2.10 REFERENCES	49	1	7/31/86
3	CENTRAL LABORATORY SUPPORT OPERATIONS FOR THE FIELD	1	1	7/31/86
	3.1 CLEANING AND SUPPLYING OF GLASSWARE AND PLASTICWARE	1	1	7/31/86
	3.1.1 Cleaning of New or Used Plasticware	1	1	7/31/86
	3.1.2 Cleaning of Glassware	2	1	7/31/86
	3.1.2.1 Glassware Used for Metal Analyses	2	1	7/31/86
	3.1.2.2 Glassware Used for Anions and NH_4^+	2	1	7/31/86
	3.1.3 Supplying Containers to the Field	2	1	7/31/86
	3.2 PREPARATION OF STANDARDS FOR THE FIELD	3	1	7/31/86
	3.2.1 Preparation and Measurement of Conductivity Standards	3	1	7/31/86
	3.2.2 Preparation and Measurement of pH Reference Solution	3	1	7/31/86
	3.2.3 Preparation of Quality Control Samples	4	1	7/31/86
	3.3 INITIAL EVALUATION OF FIELD EQUIPMENT	4	1	7/31/86
	3.3.1 Evaluation of Conductivity Meters and Cells	4	1	7/31/86
	3.3.1.1 Evaluation of Accuracy and Precision of Meter	4	1	7/31/86
	3.3.1.2 Evaluation of Linearity of Meter	6	1	7/31/86
	3.3.2 Evaluation of pH Meters	6	1	7/31/86
	3.3.3 Evaluation of pH Electrodes	7	1	7/31/86

CONTENTS (Continued)

Section		Page	Rev.	Date
3	3.3.4 Evaluation of Field Balance and Thermometers	8	1	7/31/86
	3.4 MONITORING OF FIELD OPERATION	9	1	7/31/86
	3.4.1 Evaluation of Field Conductivity and pH Measurement Systems	9	1	7/31/86
	3.4.2 Evaluation of Field Precipitation Collector, Rain Gauge, and Balance	10	1	7/31/86
	3.5 REPORT FORMS	10	1	7/31/86
	3.6 REFERENCES	11	1	7/31/86
4	LABORATORY PROCEDURES	1	1	7/31/86
	4.1 GRAVIMETRIC MEASUREMENTS	1	1	7/31/86
	4.1.1 Apparatus	1	1	7/31/86
	4.1.2 Calibration	2	1	7/31/86
	4.1.3 Procedure	2	1	7/31/86
	4.2 PH MEASUREMENT	2	1	7/31/86
	4.3 CONDUCTANCE MEASUREMENT	3	1	7/31/86
	4.4 SAMPLE FILTRATION	3	1	7/31/86
	4.5 ACIDITY MEASUREMENTS	4	1	7/31/86
	4.6 DETERMINATION OF SULFATE	4	1	7/31/86
	4.7 DETERMINATION OF NITRATE	5	1	7/31/86
	4.8 DETERMINATION OF CHLORIDE	6	1	7/31/86
	4.9 DETERMINATION OF ORTHOPHOSPHATE	6	1	7/31/86
	4.10 DETERMINATION OF FLUORIDE	7	1	7/31/86
	4.11 DETERMINATION OF AMMONIUM	7	1	7/31/86

CONTENTS (Continued)

Section			Page	Rev.	Date
4	4.12	DETERMINATION OF SODIUM, POTASSIUM, MAGNESIUM AND CALCIUM	8	1	7/31/86
	4.13	REFERENCE	8	1	7/31/86

APPENDICES

A. Aerochem Metrics Precipitation Collector Maintenance Manual	A-1	0	09/84
B. Instruction Book for Universal Recording Rain Gauge	B-1	0	09/83
C. Method 150.6 -- pH of Wet Deposition by Electrometric Determination	C-1	0	03/86
D. Method 120.6 -- Specific Conductance in Wet Deposition by Electrolytic Determination	D-1	0	03/86
E. Method 305.6 -- Acidity in Wet Deposition by Titrimetric Determination Method 305.2 -- Acidity (Titrimetric)	E-1	0	03/86
F. Method 300.6 -- Chloride, Orthophosphate, Nitrate and Sulfate in Wet Deposition by Chemically Suppressed Ion Chromatography Method 300.7 -- Dissolved Sodium, Ammonium, Potassium, Magnesium, and Calcium in Wet Deposition by Chemically Suppressed Ion Chromatography	F-1	0	03/86
G. Method 375.6 -- Sulfate in Wet Deposition by Automated Colorimetric Determination Using Barium-Methylthymol Blue	G-1	0	03/86
H. Method 353.6 -- Nitrate-Nitrite in Wet Deposition by Automated Colorimetric Determination Using Cadmium Reduction	H-1	0	03/86

CONTENTS (Continued)

Section	Page	Rev.	Date
APPENDICES			
I. Method 325.6 -- Chloride in Wet Deposition by Automated Colorimetric Determination Using Thiocyanate	I-1	0	03/86
J. Method 365.6 -- Orthophosphate in Wet Deposition by Automated Colorimetric Determination Using Ascorbic Acid Reduction	J-1	0	03/86
K. Method 340.6 -- Fluoride in Wet Deposition by Potentiometric Determination Using an Ion-Selective Electrode	K-1	0	03/86
L. Method 350.6 -- Ammonium in Wet Deposition by Electrometric Determination Using Ion-Selective Electrode	L-1	0	03/86
Method 350.7 -- Ammonium in Wet Deposition by Automated Colorimetric Determination with Phenate			
M. Method 200.6 -- Dissolved Calcium, Magnesium, Potassium, and Sodium in Wet Deposition by Flame Atomic Absorption Spectrophotometry	M-1	0	03/86
N. Method 200.6 -- Dissolved Aluminum, Cadmium, Copper, Iron, Lead, Manganese, and Zinc in Wet Deposition by Graphite Furnace Atomic Absorption Spectrophotometry	N-1	0	03/86

FIGURES

Number		Page	Rev.	Date
2-1	Wet/Dry Precipitation Collector	7	1	7/31/86
2-2	Plastic Bag Liner Assembly	24	1	7/31/86
2-3	Field Data Form for State-Operated Network	43	1	7/31/86

TABLES

Number		Page	Rev.	Date
2-1	Field Equipment List for Each Station	2	1	7/31/86
2-2	Supplies List for a Network of 10 to 12 Stations	5	1	7/31/86

1.0 INTRODUCTION

The increasing national awareness of the harmful effects of acid deposition on the ecology and materials has led to a significant increase in the number of deposition monitoring networks and related effects studies. It has become necessary to provide uniform, systematic and approved precipitation monitoring procedures so that the acquired data are accurate and comparable among all monitoring networks. The purpose of this operations and maintenance (O & M) manual is to describe in detail the currently recommended procedures for conducting precipitation monitoring. However, it is essential that these procedures be supplemented by the quality assurance tasks which are presented in the Quality Assurance Manual for Precipitation Measurement Systems (1). While these two manuals contain the procedures recommended by the Environmental Protection Agency, it must be emphasized that network protocols take precedence if conflicts occur.

The basic goals of this manual are to instruct how to collect representative samples without contamination and to preserve sample integrity for analysis. The possibility of sample contamination, degradation, or reaction must be minimized. The sample collector, the first object that contacts the sample, must meet these basic goals and must be reliable. The Department of Energy (DOE) Health and Safety Laboratory (HASL) type automatic, wet/dry collector (2), (3), (4) has been tested and accepted by most U.S. monitoring networks. Discussion is limited to this type of collector. A reliable rain gauge, pH and conductivity meter, a balance, and other accoutrements are also needed in a monitoring station.

The material in this manual is based primarily on the procedures used in the Electric Power Research Institute (EPRI) precipitation network and the Utility Acid Precipitation Study Program (UAPSP) in the Eastern United States, in the National Atmospheric Deposition Program (NADP), and in the Multi-State Atmospheric Power Production Pollution Study (MAP3S).

The EPA handbooks for air pollution measurements (5,6) and for water measurements (7) were used as guides for format and content. The analytical procedures are based on those in the manual: Development of Standard Methods for the Collection and Analysis of Precipitation (March, 1986) (7). To have this O & M manual stand alone without requiring referrals to the other EPA handbooks, some duplication of material was required; this material is referenced.

1.1 COLLECTION SITES

Collection sites must be located to meet the objectives of the monitoring program--for example, baseline, regional or urban, and siting criteria is given in Section 5.0 of the quality assurance manual (1). The quality assurance manual also contains the general rules for the placement of precipitation collectors, and the appropriate siting documentation. In addition, siting characteristics may be quantified (8) if desired. In essence, the site must yield representative samples--thus must not have obstructions which may affect the results.

1.2 PARAMETERS AND ANALYTES GENERALLY MEASURED

The constituents and/or indicators commonly measured are listed below. All are measured in the laboratory; items 8, 9, and 10 are also measured in the field.

1. Sulfate ($SO_4^=$) - Concentrations above the baseline values are caused mainly by human activities, principally by the release of SO_2 during the burning of fossil fuels and during refining processes; the SO_2 is oxidized to sulfate in the atmosphere.

2. Nitrogen Compounds (NO_3^-, NH_4^+ and - NO_x - essentially $NO + NO_2$) concentrations above the baseline values are caused primarily by the burning of fossil fuels, such as for transportation purposes; NH_3 occurs chiefly from biochemical reactions.

3. Chloride Ion (Cl^-) - Originates chiefly from sea salt aerosols.

4. Phosphate (orthotribasic PO_4^{-3}) - Source is soil, rock, and fertilizers; an important nutrient.

5. Metal Ions (Na^+, K^+, Ca^{++}, Mg^{++}) - Na^+ originates mainly from sea salt aerosols, but all of these ions can originate from soil dust in desert, semiarid and intensively cultivated areas.

6. Acidity - both SO_2 and NO_2 form the strong acids found in precipitation; organic acids are frequently also present.

7. Alkalinity - Calcareous material (e.g., soil carbonate ($CO_3^=$)), can make precipitation alkaline, and can neutralize the effects of acids.

8. pH - A quantitative measure of precipitation acidity or alkalinity. In a theoretically clean atmosphere, a water sample in equilibrium with atmospheric CO_2 would measure pH 5.6; the acidity increases as the pH decreases from 5.6 to zero. Alkaline samples have pH 7 to 14.

9. Specific Conductance - The reciprocal of the resistance of a solution; its magnitude depends on the concentrations and types of dissolved salts.

10. Precipitation Amount - Value required both to calculate the weighted mean values of the constituents and to derive the total amount of materials deposited over a time period.

1.3 SAMPLING PERIODS, DEFINITION OF EVENT

Precipitation sampling schedules that are commonly used include weekly, daily, event, and subevent (sequential). An event can be defined as a storm separated from a second storm by a dry interval, commonly at least six hours in the winter or at least three hours in the summer. The sampling schedule depends on the objectives of the program and on the available funds. Aerometric and/or meteorological studies such as transport modeling often require daily or hourly sampling. Studies of long-term trends, and spatial and temporal variability generally use longer sampling intervals. Sampling periods longer than one week are not advisable because significant changes may occur to the sample while it remains in the collector.

1.4 REFERENCES

1. Quality Assurance Handbook for Air Pollution Measurement Systems, Vol. V - Manual for Precipitation Measurement Systems, Part I - Quality Assurance Manual. U.S. Environmental Protection Agency, Research Triangle Park, NC. EPA-600/4-82-042a (January 1985).

2. Volchok, H.L., and R.T. Graveson, Proc. Second Fed. Conf. on Great Lakes, pp. 259-264 (1976).

3. Galloway, J., Water, Air and Soil Pollution 6, p. 241 (1976).

4. Bogen, D.C., Water, Air and Soil Pollution 13, p. 453 (1980).

5. Quality Assurance Handbook for Air Pollution Measurement Systems - Vol. I - Principles, U.S. Environmental Protection Agency, Research Triangle Park, N.C., EPA-600/9-76-005 (December 1984).

6. Quality Assurance Handbook for Air Pollution Measurement Systems - Vol. II - Ambient Air Specific Methods, U.S. Environmental Protection Agency, Research Triangle Park, N.C., EPA-600/4-77-027a (May 1977).

7. Development of Standard Methods for the Collection and Analysis of Precipitation, U.S. Environmental Protection Agency, Environmental Monitoring and Support Laboratory, Cincinnati, OH (March 1986).

8. Eaton, W.C. and E.L. Tew, "Site Evaluation Assistance to New and Existing Acid Precipitation Collection Sites in the State-Operated Network," Research Triangle Institute, RTP, NC, under EPA Contract 68-02-4125 (August 1985).

2.0 FIELD OPERATIONS

Precipitation collection field operations are covered in the following major areas:

1. Equipment operation and maintenance;
2. Sample collection, handling, measurement, preservation, storage, and shipment;
3. Documentation of field activities;
4. Quality control procedures.

Precipitation samples are very dilute, thus large measurement errors can occur due to contamination or degradation. Field procedures must be accomplished in a way that ensures measurement accuracy.

2.1 EQUIPMENT AND SUPPLIES

This section contains a list of the field equipment required for typical precipitation collection stations, followed by a list of spare parts for support of these stations. The section concludes with detailed descriptions of the precipitation collectors and rain gauges most commonly in use. The rain gauge measures the amount of precipitation, and the precipitation collector collects the sample for chemical analysis. The two devices are not interchangeable.

2.1.1 Station Supplies

The equipment and supplies required depend upon sampling objectives. Equipment and supplies for a weekly precipitation sampling station are listed in Table 2-1. If plastic bag bucket liners are used, the number

TABLE 2-1. FIELD EQUIPMENT LIST FOR EACH STATION

Equipment/Material	Min. Quantity/Site
Automatic precipitation collector	1
Collection buckets (3.5 gal) for sampler and lids	5
Fuses for sampler	2
Recording rain gauge with event marker	1
Rain gauge mount	1
pH meter, electrode	1
Buffer, pH 4.0, and 7.0 (1 liter)	1
Conductivity meter and cell	1
Standard KCl solution, 74 µS/cm (500 mL)	1
Temperature probe	1
Pipette, syringe (20 mL capacity)	1
Tips, disposable (pkg. of 100)	1
Balance (20 kg capacity) or graduated cylinder (2 liter)	1
Set attachment weights for balance (1,2,2,5,10 kg)	1
Mailing cartons	3
Wash bottle	1
Test tubes, plastic (17x100 mm) disposable, or vials (35 mL)	375
Test tube rack	1
Rain gauge charts (package of 100)	1
Self-adhesive labels	300
Envelopes	300
Logbook (bound with perforated pages)	1
Data forms	300
Kimwipes or other tissues (boxes)	15
Shipping tape (rolls)	3
Mallet, rubber	1
Deionized water	
Saran wrap (roll)	1
Bucket tie down	1

TABLE 2-1. FIELD EQUIPMENT LIST FOR EACH STATION (cont.)

Equipment/Material	Min. Quantity/Site
Additional Requirements for Bags:	
Bucket modified for use with bags	2
Bucket lids	2
Plastic bucket liners (bags)	50
Strap with Velcro fasteners	2
Polyethylene gloves (box of 100)	1
500 mL polyethylene bottles	50
Indelible marking pen (black)	2
Scissors	1
Plastic cable ties (pkg. of 100)	1

of wet buckets required are reduced from five to two and a supply of bucket liners, plastic gloves, plastic bottles, cable ties, two retaining straps, and scissors would be added to the list. Equipment required for event or daily precipitation sampling is similar. Similar supplies as listed in the table are also recommended for event or daily sampling. For sequential sampling, the list in Table 2-1 should include a different type of collector, a lower capacity (2.6 kg) more sensitive balance, polyethylene bottles with caps, and possibly a means for storing and shipping the sample in a cold state (insulated containers and freeze-gel packs), and few, if any, buckets. If meteorological and/or aerometric measurements are made, the appropriate instruments must be included in the list; however, these instruments are not discussed in this manual.

All sites require deionized or distilled water. If this cannot be produced at the site, it can be purchased locally. It is advisable to use only water which has the analysis (or conductivity) printed on the label. The specific conductance of the water should be 3 μS/cm or less and should be measured before the water is used.

2.1.2 Spare Parts

Precipitation collector fuses should be kept at each station along with spare parts and supplies. For larger networks, these items are more conveniently supplied through the field manager or the central laboratory when needed. Supplies for a network of 10 to 12 stations are listed in Table 2-2. The polyethylene bottles are for special sampling studies and/or for sample storage in the laboratory.

Electrodes in contact with solution have a limited life because the wet glass membrane ages. Only electrodes that can be stored in a dry state have a long shelf life. However, electrodes should not be emptied, cleaned and filled with electrolyte solution by the station operators. When an electrode breaks or becomes suspect (Section 2.5.3.3), it should

TABLE 2-2. SUPPLIES LIST FOR A NETWORK OF 10 TO 12 STATIONS

EQUIPMENT/MATERIAL	NO.
Precipitation collector fuses (12)	1
Precipitation collector sensor and motor box	2
Rain gauge clock	2
Rain gauge chart clip	3
Rain gauge chart paper (package of 100)	3
Rain gauge pens and ink (set)	1
pH meter	1
pH electrode	3
Buffer, pH 3.0, 4.0, 6.0, and 7.0 (1 gal)	2
Conductivity meter	1
Conductivity cell (cell constant ~1)	2
Standard KCl solution, 74 µS/cm	(a)
Syringe (20 mL)	20
Pipette, disposable tips	100
Shipping cartons and collection containers	36
Polyethylene sample bottles	
16 oz (500 mL)	600
8 oz (250 mL)	600
4 oz (100 mL)	600
2 oz (50 mL)	200
Wash bottle	12
Temperature probe	3
Test tubes, plastic (17x100 mm) disposable, 35 mL vials	1000
Test tube racks	12
Self-adhesive labels	1000
Envelopes	1000
Logbooks	12
Data forms	300
Kimwipes or other tissues (boxes)	36
Shipping tape (rolls)	12
Plastic bucket liners (bags)	500
Polyethylene gloves (pkg. of 100)	12
Bucket modified (for use with plastic bucket liners if network uses bags)	24
Collection buckets and lids (3.5 gal)	24
Saran wrap (roll)	12
Strap with fastener	24
Marking pen (black)	24
Scissors	12
Plastic cable ties (pkg. of 100)	12
Bucket tie down	24

(a) Make up as needed

be replaced with a new tested electrode from the central laboratory. Regardless whether the electrode is used or stored, it has a finite useful life.

2.1.3 Precipitation Collector Description

The HASL-type precipitation collector (see Figure 2-1 and Appendix A) has two containers and a common lid. The lid seals the wet sample bucket when precipitation is not occurring, and thus minimizes evaporation and contamination by dry deposition or dustfall. When precipitation occurs, the lid moves off the wet bucket and covers the dry deposition bucket. Two polyethylene buckets (1,2) are generally used to collect wet and dry deposition, respectively, for inorganic species. For organic constituents, glass or stainless steel containers should be used. The common lid is driven by a motor that is controlled by a rain sensor. The sensor contains a face plate with a grid closely spaced above it; when the grid and plate are shorted by a drop of water (precipitation), the motor is actuated to lift the lid from the collection bucket. The sensor contains two heating circuits: one goes on when the temperature falls below approximately 4°C to melt snow or ice on the sensor plate, and the second goes on when the lid lifts off the sample bucket to heat the sensor to about 55°C. Heating increases the rate of water evaporation from the sensor, and hastens the closing of the wet bucket by the lid after precipitation ceases to minimize the exposure time to dry fallout. A seal between the bucket and the lid is achieved by a plastic foam gasket under the lid and by a spring load; however, with strong winds the lid may wobble, and some contamination may enter the wet bucket. A bucket tie-down is useful in windy weather.

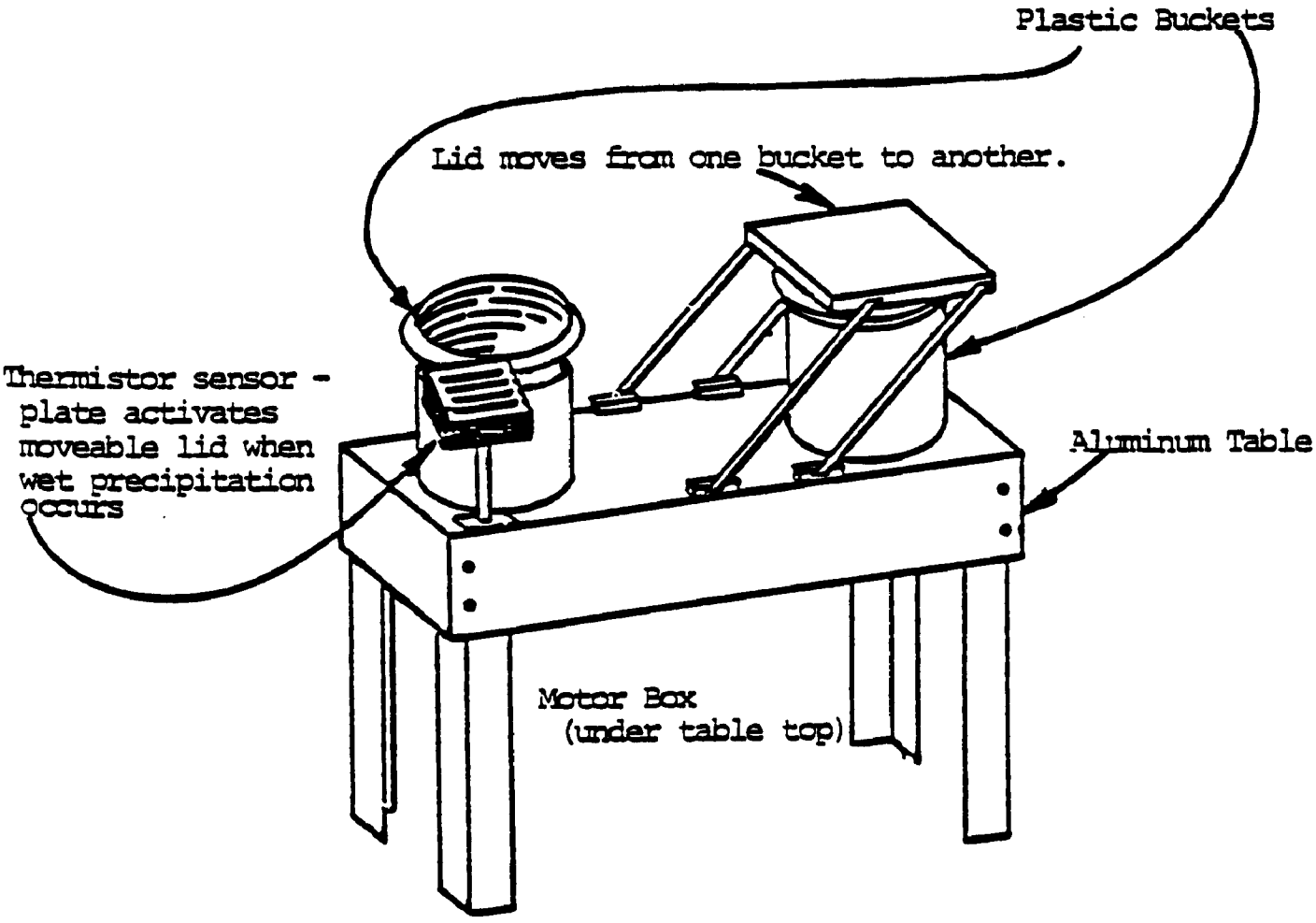

Figure 2-1. Wet/Dry Precipitation Collector

2.1.4 Rain Gauge Description

To reference all the precipitation amounts against a standard, a recording rain gauge is used to measure the quantity of precipitation. Recording rain gauges are of two basic designs (identified by the principle on which they operate)--the weighing-type gauge and the tipping bucket-type gauge. Recording rain gauges should be capable of measuring precipitation to approximately 0.25 mm (0.01 in.), and be accurate to a few percent. For the weighing gauges, the sensitivity is a few hundredths of an inch (less than 1 mm), and the accuracy is independent of precipitation rate and is about 1% of full scale. For the tipping bucket gauges, the generally accepted accuracy is 1% for precipitation rates of 25 mm/h (1 in./h) or less, 4% for rates of 75 mm/h (3 in./h), and 6% for rates up to 150 mm/h (6 in./h). The precipitation rates are either measured directly or derived from the cumulative precipitation data. The weighing gauges generally have 8-day clocks and charts, and a 0 to 30 cm (0 to 12 in.) dual traverse weighing range. See Appendix B for a typical weighing rain gauge manual.

The recording rain gauge should have an event marker pen to indicate when the wet-side collector bucket is open or closed. The times can be read off the 8-day chart. The Aerochem Metrics collector will interface with the Belfort 5-780 series rain gauge. The event pen typically is actuated, rising from its baseline, when the collector lid opens; and remains actuated until the lid closes, whereupon the pen falls to its baseline position again. To prevent the event marker pen from interfering with the sample trace pen on the weighing gauge, the two are offset on the time axis. Thus only one pen can be set at the correct time. Care must be taken to use the correct event beginning or ending time. Since the operator is seldom present to observe the collector behavior during an event, the event marker pen is invaluable for

indicating a collector malfunction. For precipitation collector assembly, operation, installation, and servicing, see the manufacturer's instructions.

2.2 INSTALLATION AND ACCEPTANCE TESTS

After a suitable site location is chosen, the precipitation collector and rain gauge must be properly installed and system acceptance tests performed before actual precipitation data can be collected.

2.2.1 Precipitation Collector

2.2.1.1 Installation--

The precipitation collector should be mounted on the ground so that the rims of the buckets are level and at least 1 m above the ground. The collector should be properly anchored against strong winds, and the bucket should be secured to the precipitation collector by means of a spring or elastic cord (bungee cord) hooked to the bucket handle and collector table edge. The precipitation collector may be shielded from the wind, but it should not be put in an area where excessive turbulence will be caused by the shield or where there are obstructions such as trees and buildings (Reference 3, Section 5). For the placement of any neighboring collectors and rain gauges of equal or smaller height, the distance between rain gauge and collector, or between collector and collector, should be at least equal to the height of the taller object. Correct spacing should minimize interference as well as splash effects. To ensure that the collector dry bucket does not act as an obstruction for the wet bucket (or precipitation sample), the collector should be aligned either perpendicularly to the prevailing winds or with the dry bucket downwind of the wet bucket. The ground surface around the

collector and rain gauge should consist of natural vegetation or gravel. It should not be paved because a hard surface may cause contamination from dust settling and water splashing into the collector or gauge.

2.2.1.2 Acceptance Tests--

Precipitation collector acceptance tests should be carried out before the collector is used in the field. These tests include: (1) sensor heating and actuating the lid when the sensor is shorted with water drops, (2) sensor cooling and return of the lid to the wet-side bucket upon removal of the shorting material (water may be wiped dry), (3) sensor temperature attainment (50°-60°C) when the lid is off the wet bucket, (4) sensor temperature (1°-2°C) when ambient temperature falls below freezing and (5) lid cycling and sealing observation. The procedures to be used for these acceptance tests are outlined below:

a) With the collector lid in its normal position over the wet bucket, add several drops of water to the sensor. The lid should move off the wet bucket within seconds, and should cover the dry bucket. After the water evaporates, the lid should return to cover the wet bucket. If there is no response, check to see that the sensor is connected to the motor box and that the power is on. If neither is the problem, the sensor or motor box is probably faulty and should be replaced. To remove the box, see the manufacturer's instructions.

b) Affix a temperature probe (thermistor, thermometer, or thermocouple) to the sensor plate near the screw head in the plate. Make sure good contact occurs, and cover the probe with an insulating material. Short the grid and plate together with a paper clip or coin. The temperature should start to climb in a few minutes, and should level off at 50° to 60°C. If the temperature setting is incorrect, it can be adjusted by turning the potentiometer screw inside the sensor box. Directions are given in the manufacturer's instructions, reprinted in Appendix A.

c) Remove the shorting object. The lid should close within a few seconds and the temperature should fall to ambient.

d) During steps b and c, check that the lid does not cycle. Also check the lid seals.

e) If the lid does not seal the wet bucket, check to see if the plastic foam gasket is secured in the correct position. To remove the seal, see the manufacturer's instructions and Section 2.3.1, step 5. If this is not the problem, contact the manufacturer.

f) If the lid cycles while the sensor is shorted, the cause is probably a bad magnetic switch in the motor box or the lid arm that actuates the switch. The arm may be loose or may have moved too far out (more than 1 mm (1/32 in.)) from the switch as it passed the switch during lid movement. If the latter is the case, the lid arm can be adjusted and secured by tightening the 1/4 x 20 head screw in the bronze collar that secures the arm and the clutch to the motor shaft.

g) Check the sensor heating circuit at freezing temperatures. The Aerochem Metrics collector has a standard heater/ammeter test plug which connects the sensor and the table cannon plugs. When the heater goes on, 0.6 to 0.7 A of current flows through the heater. The sensor can be cooled at warm temperatures by unscrewing the sensor probe from the collector table and by placing it in a refrigerator freezer compartment. A temperature probe on the sensor will give its temperature. Current should flow when the temperature falls to 0° to 2°C. The temperature setting of this circuit cannot be altered except by changing the resistor in the circuit.

If any of the above tests indicate a malfunction, either the problem must be remedied or the apparatus returned to the manufacturer. In general, the problem can be rectified by the operator replacing the sensor or the motor box. Do not replace any switches.

2.2.2 Rain Gauge

2.2.2.1 Installation--

The rain gauge should be mounted on a firmly anchored support or base so that its funnel rim is level and at about the same height as the collector rim to enable comparisons of collection amounts between the two. The Belfort gauge can be mounted with three bolts to a level platform of 30.5 x 30.5 x 0.48 cm (12 x 12 x 3/16 in.) hot-rolled steel, welded to a 5.1 cm (2 in.) diameter 1.0 m (3.5 ft.) pipe. The pipe is sunk in cement for stability, and it should extend above ground about 0.53 m (21 in.) to bring the gauge to the same height as the precipitation collector. Alternatively, the gauge can be mounted (bolted) to cinder blocks. Holes can be drilled in the cinder block with a masonry bit. The level of the gauge can be adjusted by the addition of washers to the bolts. The gauge level can be checked with a carpenter's level placed at two intersecting positions. The gauge mouth should be high enough so that it will not be covered by snow.

In open, windy areas, a wind shield (e.g., swingleaf wind shields such as the Alter used by the U.S. Weather Service) should be used with the rain gauge.

For rain gauges which contain a clock (recorder), the access door to the chart drive should be on the leeward side of the gauge and should be kept closed to minimize dirt and moisture affecting the chart and the clock mechanism. Never oil any part of the gauge except for the chart drive, and oil this only when necessary with a light machine oil.

2.2.2.2 Acceptance Tests--

Rain gauge acceptance tests should include checks on the following: 1) sensitivity and accuracy, 2) clock function, 3) pen and recorder function, and 4) event pen function. The procedures to be used for these acceptance tests are outlined below.

a) With the weighing rain gauge level and zeroed, add water equivalent to several inches. For the Belfort rain gauge 5-780 series, 1 in. = 824 g.

b) If the rain gauge does not read correctly, adjust it according to the manufacturer's instructions (Appendix B, Instruction Book for Universal Recording Rain Gauge).

c) With the pens inked and a chart in place, turn the drum to produce a zero-level trace; add water equivalent to 0.51 mm (0.02 in.), and measure the response. (For the Belfort recording rain gauge 5-780 series, 0.51 mm = 16.4 g (0.02 in.). If there is no response or if the response is more than 1.0 mm (0.04 in.), contact the manufacturer. Check the turnover point on dual traverse gauges. For tipping bucket gauges, add water in 0.25 mm (0.01 in.) increments, and note when the bucket empties.

d) Wind the chart drive (or clock) until it is fully wound, and set it for the correct time. Let the clock run for at least 24 h, and check the pen traces and the clock time. The time should be correct to within 0.5 h/24 h of running. If the clock does not meet this specification, it should be replaced. If any other problems are evident but are not addressed in the manufacturer's instructions, call the manufacturer.

e) Note that the event and weight trace pens are offset about 4 h so that they cannot interfere with each other. Set the weight pen for the correct time. Make sure that the pens (weight and event) are writing. If contact between the pen tips and the chart paper is made but writing does not occur, draw some ink with a toothpick down the pen tip to form a small pool at the contact point.

f) Connect the wires to the proper terminals on the collector and the rain gauge. Short the collector rain sensor, and observe if the event pen moves up about 3 mm (1/8 in.) from its baseline. Remove the short, and note if the event pen falls back to its baseline position. If problems with the event pen occur, notify the manufacturer.

2.3 EQUIPMENT CHECKS, MAINTENANCE AND TROUBLESHOOTING

This section contains the checks or maintenance that should be conducted on a routine basis on the precipitation collector and rain gauge. In addition, equipment problems that commonly occur are discussed, and troubleshooting remedies are presented. Records of all equipment checks and maintenance should be clearly documented in the station logbook. If malfunctions occur, attempt to diagnose and correct the problem as soon as possible. If the problem cannot be corrected, ask the field manager and/or the equipment manufacturer for advice and direction. Record the diagnosis and corrective action taken in the logbook.

2.3.1 Precipitation Collector

The precipitation collector does not require calibration, but to ensure proper functioning of the collector the following checks and maintenance should be conducted. The tasks are divided into routine checks, special calibration/maintenance and winter maintenance.

2.3.1.1 Routine Checks--

These checks should be performed at daily or weekly intervals in accordance with network procedures.

1. Collector Sensor Test - Short the sensor with a piece of metal or some water to check the lid opening and the sensor heating functions. When the sensor short is removed, the lid should close within a few seconds, and the sensor should cool. If an event pen is used, mark its traces on the rain gauge chart for these tests. Clean the sensor at monthly intervals or as needed.

2. Inspection of Dry Collector Bucket - If the collector has a dry bucket (as the wet/dry collector has), check the bucket after an event or a time period in which an event depositing more than 0.25 mm (0.01 in.)

of precipitation has occurred. Ascertain if the dry bucket contains or did contain any precipitation. Precipitation in the dry bucket is possible evidence of a collector malfunction. Possible causes of such a malfunction are (1) a dirty or faulty sensor, (2) a too high sensor heating temperature and/or a low precipitation rate, (3) a defective magnetic mercury switch in the motor box, or (4) the lid arm too far out from the magnetic switch to actuate it. All of the above reasons, except for the dirty or faulty sensor, can cause lid cycling.

3. Test of Wet-Side Bucket or Plastic Liner - At weekly intervals, if no event has occurred, test the wet-side bucket for cleanliness. Add 250 mL of deionized or distilled water, swirl the bucket so that its interior is washed, and measure the specific conductance of the solution. If the conductance is over 3 µS/cm, rinse the bucket until the rinse water conductance is less than 3 µS/cm. Conductivities greater than 3 µS/cm indicate that the bucket is contaminated due to poor initial cleaning, dry deposition and/or handling. If high conductivities are frequent at a site, poor collector sealing and/or an operator handling problem are probably present and must be corrected.

4. Examination of the Event Pen Marker Trace - At weekly intervals, inspect the event marker trace to see if the lid cycled. The event trace openings and closings should correspond to the beginning and end of the event as indicated by the slopes of the sample weight trace. Numerous up and down markings in short time intervals indicate lid cycling. Some cycling traces may occur when no event is apparent; this can occur during short, light rain events. Cycling during a heavy rainfall is symptomatic of a collector problem. No lid movement traces when the sample weight trace shows that an event occurred indicates either a collector or sensor malfunction.

2.3.1.2 Special Calibration/Maintenance--

These special maintenance and troubleshooting tasks should be undertaken as needed. Any other maintenance advised by the equipment manufacturer should be carried out at the recommended time periods.

1. Minimizing Lid Lifting by Strong Winds - Where strong winds are common, check the lid to be sure it does not wobble or is not lifted off the bucket by the wind. If either is a common occurrence, replace the springs on the collector with stronger ones, and readjust the lid arm and the counterweight balance.

2. Lid Cycling - As a common occurrence, lid cycling can be due to several causes. First, cycling during low rainfall can take place if the hot sensor plate dries the sensor rapidly. If this is a frequent occurrence, lower the temperature by turning the potentiometer screw (see manufacturer's instructions). Second, the lid arm can be loose or too far out from the magnetic switch in the motor box. Third, the switch may be defective. (For the last two, see Section 2.1.2.2, step 6).

3. Lid Malfunctioning - Another common source of collector problems is a faulty sensor. The lid may remain open, not open or open intermittently. The lid staying open indicates a shorted rain sensor. A short can be verified by unscrewing the sensor cannon connector at the motor box. The lid should then close over the wet bucket; if the lid does close, check if dirt is shorting the sensor plate and grid. If so, clean with a toothbrush or by passing a card between the grid and plate. For the other problems, the simplest remedy is to replace the sensor.

4. Replacement of Collector Lid Seal - Replace the plastic foam underseal on the lid annually or as soon as needed. It will deteriorate with time, especially in hot, dry climates. The collector lid seal is removed using the following procedure:

   a) With the collector power disconnected, place the collector lid in the middle position.

   b) Remove the two (2) screws on the edge of the lid.

   c) Remove the two (2) L-brackets into which the screws were threaded.

   d) Remove the lid pad by prying it gently along its edge with a coin or a screwdriver.

5. Cleaning Techniques and Schedule - Wash the collector rain sensor monthly with deionized water to remove dirt, salt, and film buildup. If a film persists, clean the sensor grid and plate with detergent and a toothbrush. Wipe the rim of the dry bucket weekly with clean tissues (e.g., Kimwipes) to prevent carryover of dustfall to the sealing gasket and then to the wet bucket.

6. Site Maintenance and Inspection for Obstacles - Periodically mow the grass and inspect the site area for new obstacles (e.g., a growing bush or tree) that may become an obstacle even though not one initially.

2.3.1.3 Winter Maintenance--

Check the sensor temperature if the ambient temperature falls below freezing to ensure that the heater is working. This may be done by adding snow to the sensor and observing if the snow melts (the lid will open). If necessary, the following may be conducted to prevent the freezing of equipment:

1. Prevention of Lid Freezing--To prevent the lid from freezing to the bucket, the following is recommended (4):

   a) Attach a peaked roof (available from Aerochem Metrics) to the lid to prevent buildup of snow on the lid and to help insulate the lid.

   b) Cut a small notch in one corner of the roof to insert a power cord.

   c) Attach the power cord inside the roof to an air thermostat (Honeywell or WRAP-ON) set for about 2°C (36°F); tape the cord to the roof arms.

   d) Use a 60-W or 75-W light bulb as a heater; set the bulb on a piece of 9 mm (3/8 in.) Styrofoam on the lid top to prevent a hot spot.

   e) Install a piece of 18 mm (3/4 in.) Styrofoam under the slope of the roof to minimize heat loss.

   f) To compensate for the additional weight on the lid, add two large U-bolts to the counterweight shaft (approximately 200 gms).

2. Prevention of Lid Arms Freezing to Table--To prevent freezing of the lid arms to the table, insulate one from the other.

   a) Wrap and tape a plastic sheet around each lid arm to make a boot.

   b) Tape one end of the boot to the table and the other end to the arm.

   c) Check to see that the boot is secure and does not tear loose when the lid arms move between the closed and the open bucket positions.

2.3.2 Weighing Bucket Rain Gauge

The weighing bucket rain gauge must be calibrated upon installation and at least at annual intervals thereafter. To ensure proper functioning of the gauge, the following routine checks, calibrations and maintenance should be conducted. Any other maintenance recommended by the manufacturer should be carried out.

2.3.2.1 Routine Checks--

These checks should be performed at daily, weekly or monthly intervals as appropriate.

1. Adjusting the Zero Setting - At daily or weekly intervals with no precipitation in the rain gauge, adjust the zero setting if necessary with the (red) fine adjust screw. The zero setting will fluctuate with temperature, but generally not more than ±0.75 mm (0.03 in.).

2. Checking the Pail Level - When the rain gauge pail is removed, be sure it is replaced correctly so that it is level.

3. Adjusting and Winding the Clock - Weekly, for an eight day clock, wind the clock (or chart drum) on the weighing gauge, and correct the time setting if necessary. Be sure to correct for backlash and to set the time correctly with respect to a.m. and p.m. Note the event pen times are offset from the weighing pen by about 4 h; set the weighing pen to the correct time.

4. Inspection of Pens and Ink - Weekly, inspect the pens to see if they have ink and are writing. If they are not writing, clean the pens, refill them, and be sure they are working. To help start the pens writing, use a flat toothpick to make the ink from the pen reservoir form a small pool at the point of contact between the pen and the chart.

5. Chart Replacement - At the prescribed interval, generally weekly, remove the old chart and replace it with a new one. Close the access door to the chart.

6. Level Check - At bimonthly intervals, measure the gauge level to ensure that it is still horizontal.

2.3.2.2 Calibrations--

Two types of calibrations are recommended. A single point check to be performed monthly and a multi-point calibration to be conducted at least annually.

1. Rain Gauge Check - Once a month, add several known weights of tap water to the rain gauge to see that it is measuring correctly. For the Belfort weighing gauge, 25.4 mm = 1 in. = 824 g.

2. Rain Gauge Calibration - At 12-month intervals (unless test 1 shows it is necessary sooner), calibrate and adjust the weighing bucket rain gauge at each 25 mm (1 in.) level according to the manufacturer's instructions. A set of weights and a linearity tool can be obtained from the manufacturer for the calibration. Alternatively, weighed quantities of tap water can be used. For the Belfort gauge, 25.4 mm = 1 in. = 824 g. With a dual traverse pen recorder such as the Belfort (0 to 6 in. and 6 to 12 in. traverses), the range 127 to 178 mm (5 to 7 in.) has been found difficult to calibrate and to keep calibrated. To minimize use of this range interval, the rain gauge bucket can be emptied after each event or week of events. In the winter, antifreeze must be added to the weighing gauge bucket to help melt the captured snow. Thus a severe or prolonged storm can bring the gauge to the 127 to 178 mm (5 to 7 in.) level. If it is found that a calibration problem exists in the 127 to 178 mm (5 to 7 in.) range, it is recommended that the bucket be emptied whenever the 127 mm (5 in.) range is approached and that new antifreeze be added. If a tipping bucket gauge is used, it can be calibrated by adding a measured volume of water, using a slow drip technique, as specified in the manufacturer's instructions.

2.3.2.3 Winter Maintenance--

In the winter, rain gauge problems can be caused by (1) snow filling or drifting out of the gauge, (2) freezing of the collected precipitation which can damage the gauge bucket, and (3) the cold affecting the clock and/or ink.

Therefore, the following actions should be taken:

a) Remove the funnel in the inlet mouth.

b) Add approximately 1600 g (2 in.) of an ethylene glycol-methyl alcohol (40:60) antifreeze mixture (Belfort manual, Section 4.3). To retard evaporation, add 180 mL (6 oz) of a 10W motor oil. Do not adjust the gauge reading after adding the antifreeze. The gauge will indicate rainfall of approximately 50 mm (2 in.). The ethylene glycol-methanol with precipitation added to yield 150 mm (6 in.) of solution will freeze below -40°C (-40°F). For less severe conditions, use approximately 50 mm (2 in.) of ethylene glycol antifreeze alone. When enough precipitation has been collected to yield 127 mm (5 in.), the mixture will be liquid at -24°C (-12°F). Since the weighing gauge is most difficult to keep in calibration in the 127 to 178 mm (5 to 7 in.) range, empty the gauge when the 127 mm (5 in.) level is reached, and add new antifreeze. The antifreeze will not only aid in melting the snow, but will prevent freezing of collected precipitation and resulting damage to the container.

c) In extremely cold periods, the clock (if not new) may run slowly, and/or the ink may not flow. Low-temperature ink is available from the rain gauge manufacturer. Use of a low-temperature lubricant may be helpful if the clock runs too slowly.

2.4 SAMPLE COLLECTION AND HANDLING

2.4.1 Avoiding Contamination

Careful handling of equipment and samples to prevent contamination is extremely important. The dissolved substances have very low concentrations, so any contamination will result in large errors. Thus all articles that contact the samples must be clean. All the buckets and containers have been cleaned at the central laboratory. Only the materials (e.g., sample buckets, electrodes, cells, and probes) that are used and not returned to the laboratory must be rinsed. All rinses should be done with deionized or distilled water.

2.4.2 Sampling Schedules

Sampling schedules generally used include weekly, daily, event, and subevent. Daily and weekly samples should be removed at the same time of day for each sampling period unless precipitation is occurring at that time; then a delay of up to 12 h for daily sampling and 24 h for weekly is permissible. For event schedules, remove the sample immediately after the event or at a set time daily.

For sequential schedules, treat the samples similarly to the event samples. Since one event may produce several samples, it is important to identify each sample in the chronological order of occurrence. For sequential sampling it is important that the time corresponding to each subevent specimen be known so that correlations with other data can be made.

The samples are identified and measured for amount, pH, and conductivity. They are then sealed in plastic bottles, if event or daily samples, and stored in a refrigerator until shipment (Sections 2.5 and 2.6).

2.4.3 Collection and Handling Procedures

Precipitation samples are collected in wet buckets, plastic bag bucket liners, or plastic bottles. The methodology for each is given below.

The containers for the wet samples should have been cleaned prior to shipment to the field and do not require rinsing in the field before use. Never substitute a precipitation collector dry bucket for a wet bucket. At all times, take care not to contact the inside wall of a container, a lid or a cap with any object--especially one's finger which can leave a

deposit of salt and oil. The container should be capped until immediately before use, and must be resealed immediately after use. Since human breath contains ammonia, do not exhale into a container.

2.4.3.1 Wet Buckets--

Immediately before use, label the new precipitation collector wet bucket (or for sequential sampling, the capture bottles). Weigh the bucket after the label is affixed. The label should contain the station identification, the date placed in use, and the bucket weight (without lid). After the sampling period, the final weight is added. Use a pencil or ball point pen to inscribe the labels. Below are standard operational procedures to be adopted when handling precipitation collection buckets.

a) Do not remove a clean bucket from the plastic bag in which it is shipped until it is to be placed in the collector.

b) Check the collector bucket for precipitation at the scheduled times. Move the lid from the wet bucket by contacting a coin or metal object to the sensor grid-plate to activate the motor and move the lid to the dry sample bucket. The lid will remain open until the metal object bridging the sensor is removed. NEVER TRY TO FORCE THE LID OPEN BY HAND.

c) Remove the bucket from the collector at the scheduled time, and replace it with a clean, weighed, labeled bucket.

d) Remove the lid from the new bucket after it has been placed in the precipitation collector, and cover the removed sample bucket with the new lid to minimize the chance of contamination. Fasten lid on old bucket with masking tape.

e) If no sample is present, seal the empty bucket and return it to the laboratory, or, depending on the protocol, rinse it at the field station for reuse (see Section 2.6.3).

f) Remove and replace the rain gauge chart. Record readings (times of start and end of precipitation) on data form. For the final amount of precipitation reading, use the maximum value on the

rain chart at end of event because loss of water by evaporation will occur on standing.

g) If there is no antifreeze in the rain gauge, empty its bucket. If there is antifreeze, do not empty the bucket until the reading is 127 mm (5.0 ± 0.3 in.); then empty the bucket and add new antifreeze.

h) Weigh bucket and sample (see Section 2.5.1).

2.4.3.2 Plastic Bag Liners--

When plastic bags are used for bucket liners, the buckets are modified by drilling a vent hole near the bucket rim to allow air to escape (5). A new bag is inserted in the bucket each week and removed at the end of the weekly collection period. Avoid touching the inside of the bucket or bag below its top except when wearing polyethylene gloves.

a) To insert the plastic bag (5), use a clean pair of plastic disposable gloves. Open the bag to fill it with air.

b) About 4 to 5 in. down from the opening, squeeze the bag closed to capture the air in the bag.

c) Push the inflated bag into the bucket until it touches the bottom.

d) Fold the upper 4 or 5 in. of the bag over the bucket rim and adjust to minimize creases on the rim.

e) Secure the bag flap to the outside of the bucket just above the first ridge (and above the handle) with a retaining strap (see Figure 2-2).

f) The bag can be opened more fully inside the bucket by smoothing the bag against the inside wall. Always wear clean gloves while doing this.

g) Weigh the bucket + bag assembly and record the weight.

h) Cover bucket with its lid until it is to be placed in the precipitation collector.

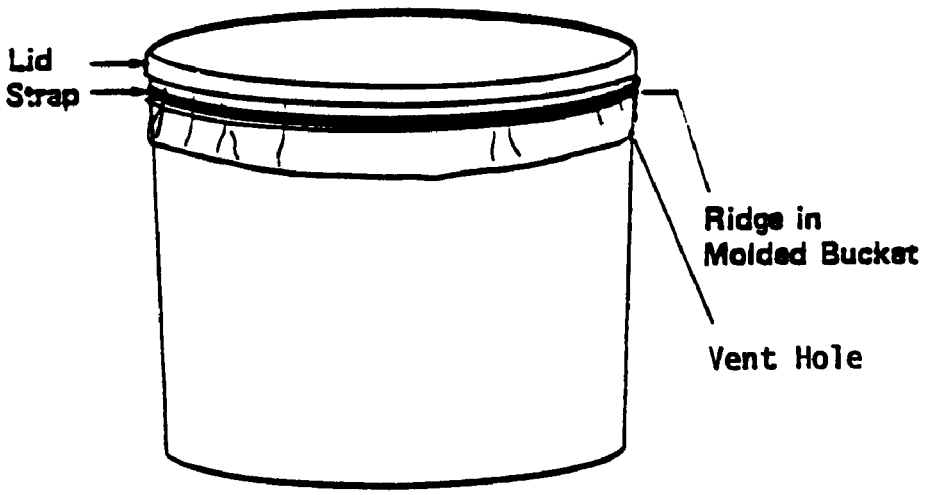

Figure 2-2. Plastic Bag Liner Assembly

To remove the sample (e), carry the covered bucket containing the liner with or without a sample to the site laboratory.

a) After the bucket containing the liner, retaining strap, and sample is weighed, remove the retaining strap without passing it over the open bucket (to avoid any contamination falling in).

b) Push up some of the liner flap outside the bucket to enable the top of the liner to be grasped.

c) Lift the bag up out of the bucket several inches.

d) Holding the bag with one hand, squeeze the bag shut about one in. below the bucket rim and close the bag with a cable tie. If sample is frozen, allow it to melt completely before closing the bag with the cable tie.

e) Remove the bag from the bucket, swirl to mix contents, and wash one of its bottom corners with deionized water.

f) Elevate the cleaned, dried corner so that it is not in contact with solution and cut off about 1/2 in. using cleaned scissors.

g) Lower the cut corner, carefully pouring an aliquot of the sample into a clean, 500-mL, wide mouth plastic bottle. Label the bottle with an indelible marking pen. Discard any collected sample remaining in the bag.

2.4.3.3 Bottles--

For event or daily sampling, the number of buckets required, as well as storage and shipment space, are minimized by transferring the sample from the bucket after it is weighed (Section 2.5.1.2) to a 500-mL labeled, wide-mouth polyethylene bottle. If frozen, the sample must be completely melted and mixed before transferring. If sufficient sample is present (e.g., more than 300 mL), use 50 mL to rinse the shipping bottle. One 500-mL bottle per event is a sufficient sample for all measurements; the rest of the sample may be discarded.

For sequential samples, which are collected through a funnel directly into prenumbered, prelabeled polyethylene bottles, seal the bottles immediately after the samples are collected.

Wash the sample bucket or, for sequential precipitation collectors, the funnel and tubing with deionized water until the rinse water has a specific conductance below 2 μS/cm (step 3, Section 2.3.1).

The samples are now ready for field measurement; check that the containers are correctly labeled.

2.5 FIELD MEASUREMENTS

The field measurement procedures for weighing, conductivity, pH, and temperature should be identical to those used by the central laboratory. Each bucket is weighed both before and after sampling. If sufficient sample (more than 70 g) is available, its pH and conductivity are measured both in the field laboratory and at the central laboratory. These measurements are used as a check to detect sample changes. If less than 70 g of sample are collected, the sample is sent to the central laboratory without measuring conductivity and pH.

2.5.1 Weighing Sample Containers

2.5.1.1 Balance Specifications--

The balance should have a capacity of 20 kg and a precision of at least ±10 g. The mass of precipitation collected by the precipitation collector is measured to determine the rain collector efficiency compared to the rain gauge.

2.5.1.2 Procedure--

a) Before each weighing, brush off the balance pan with a soft brush.

b) With the balance level, adjust to zero (see manufacturer's instructions).

c) Before sampling, place a new bucket, or a bucket containing a new plastic bag liner, without its lid (and/or bottle with its lid) on the balance, and weigh to the nearest gram. Do not allow the bucket lid's inner surface to contact any object. Record the weight on the data form and on the container label (Section 2.7.3).

d) Before weighing the bucket containing a sample, tap the covered bucket to knock any water drops off the inside lid surface into the bucket, wipe off the outside of the bucket, remove the tape and the lid from the bucket, and place lid with its outer surface on the table.

e) After the balance has been zeroed, place the bucket without its lid on the balance pan, cover the open bucket with Saran Wrap, and weigh to the nearest gram.

f) Record the weight on the bucket label and on the field data form.

g) Subtract the initial weight of the empty container from the final weight of container plus sample to obtain the sample weight. Record on field data form.

h) Avoid breathing onto the sample to prevent ammonia contamination.

i) If sample is more than 70 g, remove an aliquot of about 20 g for conductance and pH measurements. For this, a disposable syringe can be used. If sample is frozen, allow it to melt completely in its closed container, and swirl the container to assure homogeneity before removing the aliquot. Reweigh sample plus container to obtain aliquot weight by difference.

j) Seal container with lid; obtain and record total weight to be shipped to the central laboratory. If sample is shipped in its bucket, secure the lid with a rubber mallet.

2.5.2 Specific Conductance Measurement

2.5.2.1 Apparatus Requirements--

The conductivity meter should permit selection of several different measurement ranges between 0 to 10 and 0 to 1000 µS/cm, and have a precision of ±0.5% of range and an accuracy of at least ±1.0% full scale. The range most frequently used is 0 to 100 µS/cm. A temperature-compensated cell with a cell constant of 1.0/cm is preferred.

For calibration, use a KCl solution of known specific conductance and be sure the temperature of the KCl standard and the sample are the same. For rain samples, a 0.0005M KCl solution which has a specific conductance of 74 µS/cm at 25°C is appropriate.

The specific conductance of the sample can be measured on the same aliquot as used for pH. If this is to be done, measure the specific conductance before measuring the pH to avoid any possible error due to electrolyte contamination from the pH electrode.

2.5.2.2 Procedure--

Measure the specific conductance for all samples over 70 g, using the procedure in Method 120.1 (Specific conductance) (6).

1. Summary of Method

   a) Measure the specific conductance of a sample by using a self-contained conductivity meter, Wheatstone bridge-type or equivalent.

   b) Analyze samples preferably at 25°C. If not and if the meter does not have automatic temperature compensation, measure at 20° to 28°C, and correct to 25°C.

2. Sample Handling and Preservation

a) Perform analyses in the field laboratory and/or the central laboratory.

b) If analysis is not completed within 24 h of sample collection, store sample at 4°C for preservation. Wash the apparatus with high quality distilled/deionized water, and prerinse with sample before use.

c) Remove sample aliquot for measurement, and seal the bulk sample. Allow sample aliquot to come to ambient temperature before proceeding with conductance measurement.

3. Specific Conductance Meter Standardization

a) Follow the manufacturer's instructions for the operation of the instrument.

b) Allow sample aliquot to come to room temperature (23°-27°C), if possible.

c) Use 74 µS/cm standard. For dip tube cell, rinse and shake test tube or vial three times with deionized or distilled water.

d) Add 1.3 cm (0.5 in.) of 74 µS/cm solution to test tube; swirl to coat walls; drain. Add 20 mL of solution or enough to cover electrodes; insert rinsed conductivity cell. Remove and shake; repeat two times.

e) Insert cell; set meter to conductivity, and control knob to read 74. Readjust after 1 min. Move cell up and down to remove bubbles, readjust to 74 if required.

f) Discard solution; shake cell and tube dry. Put a second aliquot of 74 µS/cm solution in same tube; check reading. Readjust meter if necessary. Discard solution.

g) For closed bottom type cell, use above instructions omitting the test tube, and add sufficient water or solution to cover electrodes.

h) Determine the temperature of the sample to ±0.5°C. If the temperature of the sample is not 25°C, make the correction (as shown below) to convert reading to 25°C. After measurement, either discard the solution or save it for pH measurement; never pour the solution back into its container. Record the data in logbook.

The following temperature corrections are based on the standard KCl solution, and are used with instruments with no automatic temperature compensation.

(1) If the temperature of the sample is below 25°C, add 2% of the reading per degree.

(2) If the temperature is above 25°C, subtract 2% of the reading per degree.

Report results as conductivity (µS/cm) at 25°C on the data form.

4. Conductance Test

a) For dip tube cell, rinse and shake a new test tube or vial five times with deionized or distilled water. Rinse and shake conductivity cell three times.

b) Pour deionized or distilled water into test tube or vial. Dip and shake cell three times before reading. Let solution stand until quiescent. If the conductance exceeds that of the deionized water, repeat rinses until it is equal to that of the water. Record latter of two readings on the field data form for conductivity of distilled water.

c) Drain and shake tube; shake cell dry.

d) Rinse test tube or vial with sample. Pour sample into tube to cover electrodes. Reseal bulk sample container. Dip and shake cell three times, then, after solution has come to rest, measure conductance and record.

e) For closed bottom type cell, use similar procedure, and add sufficient deionized water or sample to cover electrodes.

f) Save this sample for pH test.

g) Rinse cell with deionized water; drain, shake, blot and store.

2.5.2.3 Conductivity Measurement Problems and Tests--

The conductivity cell generally has few problems; store the cells as recommended by the manufacturer. The working conductivity standard is 0.0005M KCl, which will slowly degrade and is easily contaminated. To minimize errors due to changes in the calibration standard, replace the 74 µS/cm working solution at approximately quarterly intervals.

When a new working standard is received, correlate it against the old working standard. Report the measured value of the old working standard to the central laboratory, and always return enough of the old standard to the central laboratory so that it can be remeasured. Never return the old working standard before checking it against the new solution.

Store the conductance standards in a refrigerator to minimize changes but always bring them to room temperature before use. Changes of less than 3% may be ignored. If the change is more than 3%, order a new standard from the central laboratory.

If the conductance meter has an internal standardization circuit, use it to check the KCl standard by following the manufacturer's instructions. If the KCl standard has changed from its original value by more than 5%, inform the central laboratory immediately. Since the internal meter calibration is not a traceable standard, it must not be substituted for the KCl solution.

Another means of evaluating the working conductance standard is to compare it against the Q.A. samples received periodically from the central laboratory. Return the test samples to the central laboratory with the next sample shipment for remeasurement. If the laboratory finds that the field conductance differs from the laboratory value by more than 10%, the central laboratory will replace the old conductance standard. Store the cells as recommended by the manufacturer.

2.5.3 pH Measurement

2.5.3.1 Apparatus and Equipment (7)--

LABORATORY pH METER -- The meter may have either an analog or digital display with a readability of 0.01 pH unit. A meter that has separate calibration and slope adjustment features (8) and is electrically shielded to avoid interferences from stray currents or static charge is necessary. It may be powered by battery or 110 V AC line; if battery powered, the meter must have a battery check feature. A temperature compensator control to allow accurate measurements at temperatures other than 25°C is desirable.

SENSING ELECTRODE -- Select a sensing electrode constructed of general-purpose glass. This electrode generates lower resistance, faster response, and has a reliable range of 0-14 pH units. Refer to the manual accompanying the probe for the manufacturer's recommendations on electrode storage.

REFERENCE ELECTRODE -- The reference electrode recommended for wet deposition analysis is one equipped with a ceramic junction. The ceramic construction minimizes differences in potential between high ionic strength buffers and low ionic strength samples thus reducing errors from residual junction potentials. A reference probe equipped with a ceramic junction in an annular ring configuration generates a more stable potential in less time due to a higher flow of internal electrolyte into the solution. Single pore ceramic frit junctions also provide adequate electrolyte flow.

COMBINATION ELECTRODE -- The combination electrode combines the indicating and reference elements in a single unit. Since sample volume requirements are a consideration when analyzing wet deposition samples, combination electrodes are more convenient than separate glass and reference electrodes.

Before use, the electrode should be equilibrated in 1 x 10^{-4} mol/L hydrochloric acid (7) and stored in the same solution. Refer also to Appendix C.

THERMOMETER -- The thermometer should be readable to 0.5°C in the ambient range.

Stations may receive the required calibration buffer and storage solutions from the central laboratory, according to network protocol. The stations should notify the laboratory when the buffers need to be replaced.

2.5.3.2 Procedure--

The pH is measured for all samples weighing over 70 g. If the measurement is made on the same aliquot as that used for conductivity, the pH must be measured after the conductivity (6). An alternate procedure using dilute buffers is presented in Appendix C.

1. Scope and Application--This method is applicable to precipitation samples.

2. Summary of Method--The pH of a sample is determined electrometrically by using a glass electrode with a reference electrode.

3. Sample Handling and Preservation--

   a) Perform the analyses on site immediately after sample collection.

   b) After removal of a sample aliquot, seal the bulk sample container; if the container is a bucket use a rubber mallet to secure the lid.

4. Reagents--Standard buffer solutions may be available from the central laboratory, according to network protocol. Store buffer solutions at room temperature.

5. pH Measurement--Always determine the conductance first. Rinse water should be the best grade of deionized or distilled water available. A combination electrode is recommended. Rinse the pH electrode prior to each measurement. Report the pH to the nearest 0.01 unit and the temperature to the nearest 1.0°C on the data form.

CALIBRATION FUNCTION:

a) Adjust the temperature control on the meter to room temperature. Rinse the electrode(s) with three changes of water or with a flowing stream from a wash bottle. Dispense two aliquots of the buffer with the higher pH into separate, clean sample cups. Insert the electrode(s) into one aliquot for 30 seconds.

b) Remove the electrode(s) from the first aliquot and insert directly into the second. Allow either two minutes for equilibration or allow sufficient time for the reading to remain steady within ±0.01 pH unit for 30 seconds.

c) Adjust the calibration control until the reading corresponds to the temperature corrected value of the reference buffer solution.

SLOPE FUNCTION:

a) Rinse the electrode(s) with three changes of water or with a flowing stream from a wash bottle. Dispense two aliquots of the second reference buffer solution into separate, clean sample cups. Insert the electrode(s) into one aliquot for 30 seconds.

b) Remove the electrode(s) from the first aliquot and insert directly into the second. Allow the system to equilibrate.

c) Adjust the slope function until the reading corresponds to the temperature corrected value of the reference buffer solution.

CALIBRATION CHECK:

a) Remove the electrode(s), rinse thoroughly, and place into the first reference buffer solution. If the pH does not read within ±0.01 unit of the temperature corrected value, repeat the calibration procedure until the buffers agree.

SAMPLE MEASUREMENT:

a) Again, remove the electrodes from the buffer and rinse them thoroughly, using multiple rinsings (wash bottles are recommended). Use 30 mL of water and be sure to rinse the tip. Gently blot the

electrode tip dry. Determine the pH of the pH CHECK SAMPLE. Allow the electrode to equilibrate without stirring for 2-4 minutes, or allow sufficient time for the reading to remain steady within ±0.01 pH unit for 30 seconds, and read and record the pH to the nearest 0.01 pH unit.

b) Repeat above step only using the same 20 mL aliquot used to measure conductivity. Record the pH of the PRECIPITATION SAMPLE to the nearest 0.01 pH unit.

c) Discard the 20 mL aliquot used for conductivity and pH measurements (do not return the aliquot to the bucket) and rinse the electrodes one last time. Store the pH electrode in the KCl-HCl solution (see Section 2.5.3.1). Change the storage solution weekly.

2.5.3.3 Electrode Problems and Tests--

Two diagnostic tests which indicate the aging of the electrode are presented here.

The first test uses periodic test samples sent out to the field stations by the central laboratory. The samples should have pH and specific conductance values typical of precipitation. They should be unknown to the site operator, and are measured for both variables. These are measures of the station's accuracy if the laboratory value is assumed to be correct and if no solution change occurs in shipment.

The test solution is poured into five test tubes and the conductivity and then pH of each tube are measured as if they were five different samples. That is, the conductivity cell and pH electrode are rinsed before and after each tube is measured. The readings are tabulated and the average value and standard deviation calculated. From these results and from the time required to attain stable readings, electrode performance and precision can be evaluated. The standard deviation(s) is calculated from the relation:

$$s = \left[\sum_{i=1}^{5} (x_i - \bar{x})2/n \right]^{1/2} \qquad 2\text{-}2$$

where x_i and $\bar{x}$ are the measured and the average pH readings of the series and where n is the number of sample aliquots measured.

If the average of five field pH measurements differs from the laboratory by more than ± 0.15 unit, or the standard deviation is greater than 0.05 pH unit, the pH electrode may need replacing. The samples are returned to the laboratory with the results for recheck and evaluation. Consultation with the station operator on the technique may identify the source of the problem.

The second test uses a reference solution, which has a known pH and a conductivity similar to those of rain samples, to check the pH electrode at the station at weekly intervals. The measurement procedure is identical to that used for the rain sample. Store the solution in a refrigerator, and replace it when needed or when the solution pH or conductivity appears to have changed. For the reference solution, the pH value should agree with the value assigned by the central laboratory to better than ± 0.10 unit.

If the first measurement differs by more than ± 0.1 pH unit from the others for the same solution, this value should be excluded. Thus, for the test sample, a sixth sample tube should be measured. If this poor first reading behavior is exhibited by an electrode, and if sufficient precipitation sample exists, two tubes of each precipitation sample should be measured for pH, and the second value entered on the data form. The time to attain a stable reading, i.e., when pH is constant to ± 0.01 unit for 30 sec., should be no more than 2 minutes for a properly working electrode. Results of these tests serve as guides for both the measurement technique and the equilibration time to be used for precipitation sample measurements. If an electrode consistently shows behavior poorer than that given by the above time and pH difference criteria, the electrode should be replaced. If the reference solution pH

measurement has changed from the previous month's value by more than 0.10 unit, check the solution's conductivity. If the conductivity has changed by more than 10% from its original value, the solution and not the electrode has probably degraded and should be replaced. Always return enough of the solution so that it can be checked by the central laboratory.

2.5.4 Temperature

2.5.4.1 Requirements --

The temperature probe must display at least 0.5°C increments. A thermistor, thermocouple, or thermometer can be used. The probe should be calibrated by the central laboratory.

2.5.4.2 Procedure--

a) Before measuring a solution, rinse the temperature probe with deionized water, and shake it dry.

b) To minimize contamination, do not insert the probe into any solution until after the other measurements, i.e., conductivity and pH, have been made.

c) Read and record the temperature to the nearest 0.5°C.

2.6 SAMPLE IDENTIFICATION, PRESERVATION, STORAGE, AND SHIPMENT

2.6.1 Background

Samples must be adequately identified so that they can be readily and correctly matched up with their data forms. The sample label should contain station identification, sampling date, and sample weight. Use a pencil or a ball-point pen to mark the label so that it is still legible if it gets wet.

Sample degradation can be caused by chemical interactions--for example, with particles or gases, or biochemical reactions. Preservation of sample integrity after removal from the collector can be improved by filtration, sealing the sample, and storage in the dark. Freezing is not recommended. Refrigeration is typically used for daily or event samples but not for weekly samples. To minimize contamination, sample filtration is performed in the central laboratory.

In the case of duplicate (collocated) or sequential collectors, treat each sample container as a separate sample. For duplicate collectors, distinguish the samples by adding a -1 and -2 beside the station identification space on the data form. For sequential samples, add -11, -12, -13, and so forth to denote the chronological order of collection for each event.

Sample shipments are made weekly to the central laboratory for economic reasons for weekly, daily, event, or sequential samples. Generally, the shipment should be made early in the week (preferably on Mondays or Tuesdays) and shipped to the central lab by the U.S. Postal Service first class mail, or by other carriers that will guarantee delivery within three days. The method used should be prescribed by the network protocol. All samples must be well-identified, and should be accompanied by the appropriate data forms.

The central laboratory, upon receipt of the shipment, will replace the used sample buckets or containers with clean ones by return mail or other delivery mode.

2.6.2 Procedure

Label each sample with station identification, date of sampling period, and sample weight (Section 2.4.3.1).

2.6.2.1 Weekly Cumulative Samples--

a) Be sure the sample is sealed, identified, and accompanied by its data form.

b) Pack the weekly sample collection bucket or plastic bottle (if a liner is used) into a cardboard carton or other protective box.

c) Seal the carton, and ship it to the central laboratory by first class mail or other method if prescribed in the program protocol.

2.6.2.2 Daily, Event or Sequential Samples--

Refrigerate event and sequential samples until they are shipped, and keep them cold during shipment. Ship by first class mail or other method if prescribed in the program protocol.

a) Be sure the samples are sealed, properly identified, and accompanied by their data forms.

b) Pack the samples in cardboard-enclosed Styrofoam boxes with gel freeze-packs. Keep the freeze-packs in the freezer compartment of the refrigerator for about 24 h before shipping to ensure that they are completely frozen. The gel packs are preferred because they are less likely to leak when thawed. Generally, four packs per box is sufficient to keep the samples cold for 4 or 5 days. Seal the cartons, and ship to the central laboratory.

2.6.3 Field Blanks

Field blanks are used to determine the contamination of the sample bucket or plastic bag bucket liner when there has been no measurable precipitation for a week. The blanks levels are measured from a thorough rinse of the bucket or its plastic liner and yield information on the previous bucket cleaning, operator handling, contamination while in the collector, and so forth.

2.6.3.1 Buckets--

For weekly samples, when there has been no precipitation, the empty wet-side bucket is removed from the precipitation collector. Depending on network protocol, the bucket is either sealed and shipped to the central laboratory or treated at the field lab as follows. At the field lab, 100 mL of deionized water is poured into the bucket, and the bucket is swirled and tipped for the water to reach as much of the interior surface as possible. Allow the water to stand for about 5 minutes and then measure the conductance as in Section 2.9. Also measure the conductance of the deionized water. Record both values in the site logbook and on the field report form. Record under "Remarks" that the report is for a field blank. Mail the field report form to the central laboratory.

Rinse out the bucket several more times using sufficient deionized water (approximately 100 mL) to reach all the surfaces. Collect the third rinse and measure the conductance. Continue the rinses until there is no difference between the conductance of the deionized water and the rinse sample. Cap the empty bucket securely and save for reuse on the precipitation collector.

2.6.3.2 Bottles--

For daily or event samples which are shipped to the central laboratory in plastic bottles, if no precipitation has been collected in a week, prepare a field blank following the procedure described in 2.6.3.1. Perform the rinses that are required for buckets and record the conductances on the field report form and note under "Remarks" that the report is for a field blank. If the protocol calls for analysis of the blank, the first rinse is shipped to the central laboratory in a labeled, sealed plastic bottle using a similar procedure as for a sample.

2.7 DOCUMENTATION

All data, observations, and changes or modifications must be documented with dates on the proper data forms and/or in logbooks. The data forms should be in duplicate (NCR paper) with one copy kept in the station records and one shipped with the sample. The logbook entries are made out in duplicate. One copy of the logbook entry is kept at the station and the other is mailed with the data form and the rain chart to the central laboratory.

2.7.1 Logbook

Use a bound logbook with perforated pages that can be torn out easily. Record all problems and actions; dates and times of visits; equipment changes; procedural changes or modifications; standard solution changes; electrode replacement; operator changes, and so forth, in the logbook. Submit one copy to the central laboratory and keep the other at the station.

2.7.2 Rain Gauge Charts

Mark the rain gauge chart with station identification, dates and notations for tests, and any problems encountered, and submit weekly to the central laboratory.

2.7.3 Field Data Forms

The field data form must contain all of the following information: station, operator, date, sample weight, sampling times, field values of pH and conductance, and any problems encountered.

Start a new form when a clean bucket is installed in the collector. (For daily, event or sequential sampling use a new form for each sample collected.) Complete the form when the sample is removed from the collector. An example of a data form used by the State-Operated Network for weekly sampling is in Figure 2-3. The items below refer to Figure 2-3.

- **STATION NAME** and **ID** supplied by the project coordinator.
- **OBSERVER'S** signature and printed initials; person completing the form even if substituting for regular observer.
- Enter **DATE ON** and **OFF** (mo/day/yr) and the local **TIME** when sample buckets are installed and removed; specify 24-h time.
- Check appropriate boxes for the three **SITE OPERATIONS.** Diagnose items 1 and 3 from the event pen trace on the rain chart. Add evidence for item 1, for example, the lack or presence of moisture in the dry bucket and the reasonableness between the collector and rain gauge amounts in the **PRECIPITATION RECORD** below. Be sure the weight trace is complete for the sampling time period.
- **SAMPLE CONDITION** is a qualitative observation of precipitation quality. Note any comment on obvious causes of the condition under **REMARKS.**
- Complete the form for **SAMPLE WEIGHT** by entering weight of SAMPLE BUCKET with BAG (if one is used). Include total weight of sealed bucket, bag, and sample, beneath **SAMPLE WEIGHT** designation. Start a new form for newly installed bucket by entering <u>BUCKET WEIGHT</u> of bucket with a bag. Obtain the weight of precipitation in exposed bucket by subtracting BUCKET WEIGHT + BAG from BUCKET + BAG + SAMPLE WEIGHT, and entering it as **SAMPLE WEIGHT.**
- The **PRECIPITATION RECORD** gives daily **TYPE** (if known) and the **AMOUNT** (in.). Circle proper type (R,S,M, or U) under each day. The M denotes a mixture of rain plus snow/sleet/hail. Obtain the daily AMOUNT from recording rain gauge, and record it in the squares. Trace (T) indicates precipitation of 0.25mm (0.01 in.) or less. If rain gauge, chart, or pen malfunctioned and if no amount can be observed, circle **MM.** For cumulative weekly

ACID PRECIPITATION FIELD REPORT

Send Completed Form With Each Bottle To: CENTRAL LABORATORY

STATION Name_____ ID [ ][ ][ ][ ]

OBSERVER _____

BUCKET ON DATE MO DAY YR [ ][ ][ ][ ][ ][ ] TIME 0000-2400 [ ][ ][ ][ ]

BUCKET OFF DATE MO DAY YR [ ][ ][ ][ ][ ][ ] TIME 0000-2400 [ ][ ][ ][ ]

SITE OPERATIONS CHECK YES OR NO FOR EACH ITEM FOR WET-SIDE SAMPLES ONLY (If NO, Explain in Remarks)

	YES	NO
1. Collector appears to have operated properly and sampled all precipitation events during entire sampling period		
2. Rain gauge appears to have operated properly during the week		
3. Collector opened and closed at least once during the week.		

SAMPLE CONDITION COMPLETE FOR ALL SAMPLES CONTAINING PRECIPITATION

	YES	NO
1. Bird droppings		
2. Cloudy or discolored		
3. Soot or dirt		
4. Insect(s) in sample		

(Describe All Else in Remarks)

SAMPLE WEIGHT - Grams

[ ][ ][ ][ ][ ][ ].[ ] Bucket + Bag + Sample

[ ][ ][ ][ ][ ][ ].[ ] Bucket + Bag

[ ][ ][ ][ ][ ][ ].[ ] Sample Weight

PRECIPITATION RECORD R - Rain Only; S - Snow Only; M - Mixture; U - Unknown; Z - Zero; T - Trace; MM - Missing

TYPE Circle One For Each Day of Precipitation

AMOUNT In Inches or Circle One

← BUCKET ON TO BUCKET OFF →

TUES.	WED.	THURS.	FRI.	SAT	SUN.	MON	TUES
R S M U	R S M U	R S M U	R S M U	R S M U	R S M U	R S M U	R S M U
Z T MM	Z T MM	Z T MM	Z T MM	Z T MM	Z T MM	Z T MM	Z T MM

Total Sampling Period Precipitation From Rain Gauge [ ][ ].[ ][ ] Inches (gauge)

Total Precipitation From Sampler = Sample Weight x 0.00058 Inches/gram [ ][ ].[ ][ ] Inches (wt.)

SAMPLE CHEMISTRY Only for Wet-Side Buckets with Precipitation

MO DAY [ ][ ][ ][ ]

Aliquot Removed [ ][ ][ ]

Standard Certified [ ][ ].[ ] ÷ Standard Measured [ ][ ][ ][ ].[ ] = Correction Factor [ ].[ ]

Correction Factor [ ].[ ] × Sample Measured [ ][ ][ ][ ].[ ] = Sample Corrected [ ][ ][ ][ ].[ ]

Conductance [ ][ ].[ ] µS/cm Distilled Water

pH

[ ].[ ] CALIBRATION SOLUTION

[ ].[ ] SAMPLE

REFERENCE SOLUTIONS

pH [ ].[ ]

CONDUCTIVITY [ ][ ][ ][ ].[ ] CORRECTED

REMARKS For Example: Contamination By Operator, Equipment Malfunction, Harvesting in Area

SUPPLIES Circle if Needed

- Field Forms
- Bags
- Bottles
- pH Reference Solution
- Conductivity Reference Solution
- Indicate other needed supplies in remarks

ENCLOSE WHITE COPY WITH SAMPLE

samples, add all daily rain gauge amounts, and record TOTAL SAMPLING PERIOD PRECIPITATION (in.). Do not merely subtract initial reading for week from final reading because errors occur due to evaporation. Convert TOTAL COLLECTOR PRECIPITATION amount collected from grams to inches by multiplying **SAMPLE WEIGHT** by 0.00058 in./g, and record in appropriate boxes.

- Space is provided for ONE measurement of sample conductivity and pH. Only one is necessary, but if the quality of the measurement is suspect and if over 70 g of sample remain, repeat the measurement, and record only the final value. Mention only problems in the remarks section. (Instructions in Sections 2.5.2 and 2.5.3.) Enter **DATE** of determination as well as volume in mL of sample **ALIQUOT REMOVED**. Record **CONDUCTANCE** of **DISTILLED** (or **DEIONIZED) WATER** used for rinses and **SAMPLE MEASURED** conductance corrected to 25°C. If resistance bridge cannot be adjusted, insert measured value of 74 µS/cm standard in **STANDARD MEASURED** to calculate **CORRECTION FACTOR**; then calculate and record the **SAMPLE CORRECTED** value. For conductivity meters adjusted to 74 µS/cm value using KCl standard, the correction factor is 1.0. The sample aliquot used for the conductance measurement can also be used for pH measurement. Never return any aliquot to the bulk sample. Avoid contaminating bulk sample or aliquot. Measure pH of **SAMPLE** aliquot (Section 2.5.3). After the measurement is completed, recheck the pH 4 buffer value, and enter it if it differs by less than ±0.03 from 4.00. If the difference is more than ±0.03, repeat calibration, and remeasure the pH of the sample aliquot and the pH 4 buffer.

- Obtain **SUPPLIES** by circling the appropriate material. If pH standards are needed, write it in this section. To avoid running out, request new material when about one-fourth of original supply remains.

- The **REMARKS** space is provided for the observer to record any unusual problems, weather, or other occurrences at the field site or in the laboratory. Unusual occurrences in site area may include contamination by the operator, moisture in the dry bucket, plowing, harvesting, burning, increased atmospheric pollution or dust, or power outage. <u>The importance of the information requested in the remarks section cannot be overemphasized. Careful observation of the sample and occurrences in the surrounding environment can aid greatly in evaluating the validity of the sample and in the interpretation of the data collected</u>.

2.8 QUALITY CONTROL

Quality control procedures are used on a routine basis to help assure the collection of high quality data. Complete documentation of all observations and measurements, the use of known test solutions for pH tests, and the recheck of the pH calibration after sample measurements are examples of quality controls. In addition, these types of audits are used to test the field operators and the central laboratory. The first type, performance audits, uses blind samples made up by the Network Quality Assurance Manager or central laboratory for pH and specific conductance measurements to test the measurement capability at the sites. The second type is field systems audits by an experienced observer. The third type requires the field personnel to forward a sample received from quality assurance personnel to the central laboratory disguised as a regular precipitation sample to test both field and laboratory sample handling and analysis.

2.8.1 Unknown or Quality Control Test Samples for the Field

To evaluate the quality of each station's pH and conductivity measurements as well as to detect problems with these measurements, test samples of rain-type composition should be received from the central laboratory on a regular (e.g., quarterly) basis.

1. Measure these samples for pH and conductance as soon as possible after receipt. Use the same procedure as for precipitation samples (Sections 2.5.2 and 2.5.3).

2. Fill out a data form; record the data and the results in SAMPLE CHEMISTRY, and identify the sample in REMARKS.

3. Return the results on a data form, and the remainder of the sample to the central laboratory.

At the central laboratory, the sample is remeasured to be sure it has not changed during shipment to and from the station. Comparisons between the site and laboratory results will assist in the validation of routine field data. If the comparison results are poor, the Network Coordinator should initiate troubleshooting with the field operator to determine the cause of the problem and take the appropriate corrective action.

2.8.2 Site Visits/Audits

To review the quality of the measurement system and to evaluate each station's performance firsthand, a site visit should be conducted once a year or at least once every two years by experienced personnel. The audit covers all aspects of site operation.

1. About 4 to 6 weeks before the audit, a questionnaire should be sent from the Network Coordinator's office to the field personnel. They fill in the questionnaire (Section 10.0, quality assurance handbook (3)) and return it prior to the auditor's visit so that the auditor can assess the operator's overall capabilities and prepare pertinent questions.

2. The auditor will either add a test sample to a clean bucket at the station, or give the sample to the operator for measurement. The operator will weigh the sample, measure its pH and conductivity, and record the data on a data form.

3. The auditor will inspect all equipment, check the calibration of the rain gauge, offer advice, and ask questions while the operator goes through the rounds and tests.

4. If there are any problems, the auditor attempts to correct them; and failing to do so, the auditor will bring them to the attention of the site supervisor.

5. The site personnel will be informed of the results at the end of the audit. A written audit report will be submitted to the site supervisor, site sponsor, network coordinator and other officials who are concerned with operation of the site. A follow-up on corrective action will be made in 60 days. The follow-up can be by letter, telephone or revisit.

2.8.3 Blind Samples for the Laboratory

Blind samples will be sent to each station at various times for testing and forwarding to the central laboratory for analysis as part of the quality assurance program. The following are instructions and guidelines to be followed:

1. A reference sample can be shipped in a 500-mL polyethylene bottle with two preaddressed postcards, a mailing label, and a set of data.

2. Refrigerate the sample at 4°C until it can be submitted to the central laboratory during a week in which your site had no wet deposition.

3. If your precipitation samples are submitted in buckets, pour the contents of the bottle into a clean sample bucket (one which has not been used in the field) when you are ready to submit the reference sample; weigh, and record as usual on a data form.

   If your precipitation samples are sent in bottles, transfer the sample to one of your bottles, weigh, and record as usual on a data form.

4. Remove your normal aliquot and measure its pH and specific conductance; record these values as usual on the data form.

5. Fill out the rest of the regular field report form, and ship it with the sample to the central laboratory as a normal precipitation sample. Make up the information for PRECIPITATION RECORD, and so forth, on the data form.

6. Furnish the information requested on the two postcards which accompanied the sample and mail the self-addressed cards.

7. Place a clean bucket in the collector, and proceed as usual.

2.9 FIELD PROCEDURE SUMMARY

To serve as an outline, an operating procedure summary is given below. It includes the basic steps, but it is not complete. The conductivity and pH procedures are those applicable to most of the current instruments, but they may not pertain to a specific instrument being used. Check the manufacturer's instructions, and adapt this summary to your network as necessary.

Site Visits

a) Daily: check rain gauge for event occurrence. If an event occurred, record its date and time, number of lid openings, and amount of precipitation from gauge. Note the weather. Weekly: change chart, fill pens, and wind clock. Monthly: check rain gauge calibration, and clean collector sensor. Check the condition of the lid pad.

b) Check dry side buckets for moisture and other unusual occurrences. If not interested in the dry bucket analysis, wipe off the rim and leave the dry bucket in place. The dry side buckets should be cleaned weekly and replaced semi-annually.

c) If event occurred, replace wet bucket with a newly weighed one. Put new weighed lid firmly on removed sample bucket. Record observations on data form and in logbook.

d) Check collector, sensor, and rain gauge for problems.

Sample Handling

a) Wipe outside of bucket dry; tap lid to knock off drops; remove, weigh bucket (to nearest 1.0 g). Record on sample data form.

b) If sample is frozen, allow it to melt completely.

c) If sample is sent to the laboratory in a bottle rather than bucket, pour the sample into a 125, 250 or 500 mL sample bottle. Discard any sample over bottle capacity. Mark total sample weight on bottle.

d) Rinse sample bucket with deionized or distilled water, shake, and drain.

e) For sample in sealed bucket or bottle, allow at least 1 h for sample to reach room temperature before performing measurements.

2.10 REFERENCES

1. Galloway, J.N., and G.E. Likens, Water, Air and Soil Pollut. 6, 241 (1976).

2. Galloway, J.N., and G.E. Likens, Tellus 30, 71 (1978).

3. Quality Assurance Handbook for Air Pollution Measurement Systems, Vol. V - Manual for Precipitation Measurement Systems, Part I - Quality Assurance Manual. U.S. Environmental Protection Agency, Research Triangle Park, NC. EPA-600/4-82-042a (January 1981). October 1984 Revision in print.

4. Martin, C.W. NADP Winter Operation of Sampler, Hubbard Brook Experimental Forest, West Thornton, NH; letter to V.C. Bowersox, March 25, 1980.

5. Eaton, W.C., and E.D. Estes, "Use of Plastic Bags as Bucket Liners For the Aerochem Metrics Precipitation Collector", Research Triangle Institute, Research Triangle Park, NC, RTI-2474-86 (May 1984).

6. Methods for Chemical Analysis of Water and Wastes, U.S. Environmental Protection Agency, Cincinnati, OH, EPA-600/4-79-020 (March 1979).

7. Koch, W.F., and G. Marinenko, Guidelines for the Measurement of pH in Acidic Rainwater. National Bureau of Standards, for EPA.

8. Galloway, J.N., B.J. Cosby, G.E. Likens, and J. Limnol. Oceanogr. 24, 1161 (1979).

3.0 CENTRAL LABORATORY SUPPORT OPERATIONS FOR THE FIELD

The central laboratory will supply clean containers to the field sites, prepare reference standards to be used to calibrate field instruments, and furnish quality control samples for use in the field. This section discusses the care of glass and plasticware, the preparation of reference solutions, and the evaluation of field equipment by the central laboratory. The referred data forms are in Section 3.7.

The central laboratory will serve as a focal point for solving field operational problems involving equipment malfunctions. It will serve as a central distributor of replacement parts for the collector, rain gauge, pH meter, conductivity meter, balance, thermometers or thermistor probes, and ancillary supplies. The central laboratory will provide consultation service to field personnel on any technical question involving siting, sample collection, analysis, data quality and transport of the collected sample. The central laboratory will work with site personnel as intensively as necessary to assure that data quality meets standards set by the monitoring program.

3.1 CLEANING AND SUPPLYING OF GLASSWARE AND PLASTICWARE

3.1.1 Cleaning of New or Used Plasticware

a) Rinse with deionized water 6 to 10 times. NOTE: If the plastic needs to be rubbed to remove a film, use a natural sponge.

b) Let stand, filled with deionized or distilled water for 48 h. Empty and dry in an oven at 70°C.

c) After initial cleaning (steps 1 and 2), check a portion (~10%) of the containers to ensure that rinsing has been adequate. To do this, add 50 mL of deionized water to the cleaned container, seal the container with a cap or with Parafilm, and slowly rotate it so that the water touches all inner surfaces. DO NOT SHAKE. Check the conductivity of the water (Section 4.3); it should be less than 2.0 µS/cm. If any of the containers fail the check,

rerinse all of the containers cleaned for the checked samples and retest 10%.

d) After the plasticware is clean and dry, cap the containers and place them in a plastic bag to be sealed for shipment or storage.

3.1.2 Cleaning of Glassware

3.1.2.1 Glassware Used for Metal Analyses--

a) Rinse with deionized water twice and with 10% HNO_3 once.

b) Rinse 6 to 10 times with deionized water.

3.1.2.2 Glassware Used for Anions and NH_4^+--

a) Rinse with deionized water twice and with 10% KOH solution once.

b) Rinse 6 to 10 times with deionized water.

c) If water beads on the inner surface, the glassware needs to be cleaned more thoroughly. Wash with detergent, and then clean with 10% KOH solution. If water still beads, soak the glassware overnight in 10% KOH, and rinse 6 to 10 times with deionized water.

3.1.3 Supplying Containers to the Field

After a sample shipment has been logged in at the central laboratory, replace the bucket or other sample container with a clean one. The clean, sealed containers are shipped to the field site in plastic bags and shipping cartons on an as-needed basis to maintain their supply. If cold packs and insulated containers are used, these are returned also. Check that the Styrofoam boxes are intact and not cracked; if cracked, replace with a new one. The shipment can be made by ground transport since each site should have a 3-week supply of these materials on hand.

3.2 PREPARATION OF STANDARDS FOR THE FIELD

3.2.1 Preparation and Measurement of Conductivity Standards

a) Weigh out 7.456 g of predried (2 h at 105°C) KCl and dissolve it in 1 liter of deionized water (0.10M KCl).

b) Dilute 20 mL of the 0.1M KCl to 4 liters with deionized water (0.0005M KCl).

c) Fill washed 0.5-liter plastic bottles with the 0.0005M KCl solution to be sent to the field. Label the bottles with the preparation date and keep the solutions refrigerated.

d) Measure the conductivity of the solution in each bottle (Section 4.3).

e) Fill out the Field Conductivity Standard form and label the bottle with the measured conductivity.

f) Send new standards to the field monthly. When old standards are returned to the laboratory, remeasure the conductivity. Complete the Field Conductivity Standard form.

3.2.2 Preparation and Measurement of pH Reference Solution

a) Prepare 4 liters of a 10^{-4} to 10^{-5}N H_2SO_4 solution for the pH reference solution by diluting 4 mL or 0.4 mL of commercially available 0.100N sulfuric acid stock solution.

b) Fill washed 500-mL bottles with the pH reference solution. Label the bottles with the preparation date. Keep the solutions refrigerated.

c) Measure the pH of the solution in each bottle (Sections 4.2).

d) Fill out the Field pH Test Solution form, and label the bottle with the measured pH.

e) Remeasure the pH of these solutions after they are returned from the field. Complete the Field pH Test Solution form.

3.2.3 Preparation of Quality Control Samples

a) Monthly, prepare a mixed solution of 10^{-3} to 10^{-6}N H_2SO_4 from commercially available 0.100N solution and 0.0001M to 0.0003M KCl to be used as a quality control sample. A 0.10M KCl stock solution is prepared by dissolving 7.456 g of predried (2 h at 105°C) KCl in 1 L of deionized water at 25°C. For 0.0001N KCl, dilute 1 mL of the 0.10 M stock solution to 1000 mL with deionized water.

b) Fill clean 60-mL polyethylene bottles with the mixed audit sample, and send each site one sample. Three bottles should be retained by the laboratory.

c) Immediately measure the three samples kept by the laboratory for pH (Section 4.2) and conductivity (Section 4.3). Check the laboratory electrode against another backup electrode for one sample. Fill out the appropriate section of the Field Quality Control Audit Sample Report (Section 3.6.). Refrigerate the laboratory samples.

d) When the field quality control audit samples from all sites have been returned to the laboratory, reanalyze the samples along with the laboratory's three aliquots. Check the laboratory electrode against another backup electrode for one sample. Complete the Summary Field Quality Control Audit Sample Report.

3.3 INITIAL EVALUATION OF FIELD EQUIPMENT

All meters and electrodes should be tested before they are shipped to the field. The meters have a serial number affixed, but the electrodes do not. A unique identification number should therefore be taped to each electrode.

3.3.1 Evaluation of Conductance Meters and Cells

3.3.1.1 Evaluation of Accuracy and Precision of Meter--

a) Prepare a 0.0003M KCl Test Solution--Dilute 3 mL of the stock 0.10M KCl solution (Section 3.2) to 1 liter with deionized water. (Prepare daily.)

b) Calibrate the Field Conductance Meter--Calibrate as indicated by the manufacturer or as described in Section 4.3.

c) Fill 11 Vials or Plastic (17x100 mm) Tubes--Fill to a depth of 3 cm (or to cover the electrode) with the 0.0003M KCl. The first tube is to be used as a rinse tube.

d) Measure the Conductance of the 10 Solutions--Between each measurement, rinse the conductivity cell thoroughly with distilled water, carefully shake it dry, and dip it in the rinse solution three times.

e) Calculate an Average Value and the Standard Deviation--Use the following relationships. Programmed calculators make this a simple operation.

$$\bar{x} = \frac{\sum_{i=1}^{10} x_i}{n} \qquad 3\text{-}1$$

and

$$s = \left[\sum_{i=1}^{10} (x_i - \bar{x})^2/(n-1) \right]^{1/2} \qquad 3\text{-}2$$

where

x_i = the measured value (in µS/cm or pH units),

$\bar{x}$ = the average value,

s = standard deviation, and

n = the number of values.

f) Record the Results--Record results on the Conductance Meter/Cell Acceptance Test form and the Conductance Acceptance Test Summary Form. The conductivity meter and cell are acceptable if the average value is within 2% of the theoretical value of 44.6 µS/cm (25°C) and if the relative standard deviation is less than 2%.

3.3.1.2 Evaluation of Linearity of Meter--

a) Prepare three of the following standards so that each range of the meter has at least one standard

Standard	Preparation	Normality KCl
147.0 µS/cm	Dilute 1 mL of 0.1N KCl to 100 mL	0.001
75.0 µS/cm	Dilute 500 µL of 0.1N KCl to 100 mL	0.0005
44.6 µS/cm	Dilute 300 µL of 0.1N KCl to 100 mL	0.0003
14.9 µS/cm	Dilute 100 µL of 0.1N KCl to 100 mL	0.0001
7.5 µS/cm	Dilute 50 µL of 0.1N KCl to 100 mL	0.00005

b) Calibrate the field conductivity meter as indicated by the manufacturer.

c) Measure the conductivity of each standard as described in Section 4.3.1.5.

d) Determine the linearity of the meter by performing a linear least squares fit on the data. Record the results on the Conductance Meter/Cell Acceptance Test Form and the Conductance Acceptance Test Summary Form. The coefficient of correlation should be 0.999 or better. If it is less than 0.999, the meter should be adjusted. Some manufacturers provide procedures for these adjustments. Otherwise, the meter should be returned to the manufacturer for calibration.

3.3.2 Evaluation of pH Meters

a) Calibrate the Field pH Meter--Calibrate as indicated by the manufacturer or as described in Section 4.2.4. A laboratory pH electrode of documented performance should be used.

b) Fill 11 Vials or Plastic (17x100 mm) Tubes--Fill to a depth of 3 cm with fresh pH electrode reference solution (Section 3.2.2). The first tube is to be used as a rinse tube.

c) Measure the pH of the 10 Solutions--Between each measurement, rinse the pH electrode thoroughly with deionized or distilled water, carefully drain or shake it dry, and dip it in the rinse solution three times.

d) Calculate an Average Value and the Standard Deviation--See Section 3.3.1.1, (e).

e) Record the Results--Record on the pH Meter/Electrode Acceptance Test Form and the pH Acceptance Test Summary Form. The pH meter is acceptable if the average pH is within 0.1 pH unit of the calculated value and the standard deviation is less than 0.03 units. (Calculated pH = -log (Normality H_2SO_4).

3.3.3 Evaluation of pH Electrodes

a) Assign Each New pH Electrode an Identification Number--Allow it to equilibrate overnight in 1×10^{-4} mol/L HCl.

b) Rinse the Electrode Carefully with Deionized Water--Prior to testing, and then place it successively in deionized water in different test tubes until a constant pH reading is achieved.

c) Calibrate the Laboratory pH Meter--Calibrate as indicated by the manufacturer or as described in Section 4.2.

d) Measure the pH of 10 Tubes--Measure pH reference solution as described in Section 3.3.2 and note drift, noise and response time.

e) Calculate an Average Value and the Standard Deviation--See Section 3.3.1.1, (e).

f) Record the Results--Record on the pH Meter/Electrode Acceptance Test Form and the pH Acceptance Test Summary Form. The pH electrode is acceptable if the average pH is within 0.1 pH unit of the calculated value and if the standard deviation is less than 0.03 pH unit.

3.3.4 Evaluation of Field Balance and Thermometers

Reference weights traceable to NBS are necessary for balance calibration. Each laboratory should purchase a set of NBS-traceable weights to be used to certify a set of working weights used in the field and laboratory. Semi-annual calibration checks are recommended. The procedure used to certify weights is as follows:

a) zero the balance according to manufacturer's recommendations,

b) weigh the working certified 1.0 and 5.0 Kg weights,

c) weigh reference 1.0 and 5.0 Kg weights,

d) repeat this procedure five times, and

e) complete the Certification of Working Weights to NBS form.

Working reference weights should be certified by this procedure once a year. The NBS-traceable weights are kept as primary standards. All working reference weights should weigh within 0.1% of the NBS-traceable weights.

Each laboratory should have an NBS-traceable thermometer. One thermometer in the laboratory should be certified against the NBS-traceable standard. Keep the NBS-traceable thermometer as a primary standard. Assign all laboratory and field thermometers (or temperature probes) identification numbers, and then calibrate them against the (secondary) certified thermometer. Calibrate the temperature probes in a circulating water bath in the 0° to 25°C range against the certified thermometer, and complete the Thermometer Calibration Log Form. File one copy in the laboratory, and send another to the field with the temperature probe. If the water bath does not have a cooling coil, an ice-water mixture can be used to achieve the low-temperature reading. Calibration at two temperatures, near 0° and 25°C, is sufficient and a linear temperature behavior may be assumed. Temperature differences

between the certified thermometer and the test thermometer should be no greater than 0.5 degree.

3.4 MONITORING OF FIELD OPERATION

It is the function of the central laboratory to monitor field results to determine if a site is operating properly. The laboratory receives a copy of the site log book and sample data sheets weekly. From these and the results of the monthly Quality Control Sample (Section 3.2.3) the central laboratory can determine if the site is functioning properly.

3.4.1 Evaluation of Field Conductivity and pH Measurement Systems

As needed, the central laboratory sends Quality Control (QC) samples (Section 3.2.3) to each field site. After all samples have been measured for conductivity and pH by the site operators, returned to the central laboratory and remeasured by the central laboratory, the results are recorded on the Monthly Field Audit Report (Section 9.1.2, QA Manual (1)). Accuracy is estimated and the acceptance criteria are applied.

If a site's QC sample result is outside the pH acceptance criteria, the pH reference solution (Section 3.2.2) values recorded by the site operator on recent field sample data sheets are checked. If these results are also questionable, a new pH electrode which has been checked by the central laboratory (Section 3.3.3) is sent to the field with a new QC sample. If the pH system still does not function properly, the pH meter is replaced.

If a QC conductance value measured by the site operator is outside the conductivity acceptance criteria, a new conductance standard is sent to the site. If this does not solve the problem, the conductivity meter and cell are replaced. In all cases the central laboratory personnel communicate with the site operator to determine if there is an outside cause of malfunctioning.

3.4.2 Evaluation of Field Precipitation Collector, Rain Gauge and Balance

All measurements in the field, including sample weight and rain gauge reading, are recorded by the site operator on field data forms and all observations are noted in a bound log book with perforated second copies that can be torn out easily. These pages are sent to the central laboratory for review along with the data forms. Central laboratory personnel evaluate the performance of the precipitation collector, rain gauge, and balance from these sources, the weekly telephone call, and the precipitation collector collection efficiency. In addition, the performance of the rain gauge and balance are evaluated by reviewing the field records when the site operators check the rain gauge and balance with known weights. During field audits, the auditor evaluates all site equipment.

3.5 REPORT FORMS

Blank data forms are included in this section for the convenience of the manual user. Use of the forms is discussed throughout Section 3. The forms included are listed below:

Title

Field Conductivity Standard Report

Field pH Reference Solution

Field Quality Control Audit Sample Report - Laboratory Data

Conductivity Meter/Cell Acceptance Test Report

Conductivity Acceptance Test Summary

pH Meter/Electrode Acceptance Test Report

pH Acceptance Test Summary

Certification of Working Weights to NBS-Traceable Standards

Thermometer Calibration Log

3.6 REFERENCES

1. Quality Assurance Handbook for Air Pollution Measurement Systems, Vol. V - Manual for Precipitation measurement Systems, Part I - Quality Assurance Manual. U.S. Environmental Protection Agency, Research Triangle Park, NC. EPA-600/4-82-042a (January 1981). Revised January 1985.

FIELD CONDUCTIVITY STANDARD REPORT

DATE OF PREPARATION OF
0.1M KCl STOCK SOLUTION: _____

DATE OF PREPARATION OF
DILUTE FIELD STANDARD: _____

_____
(Analyst's Signature)

LABORATORY ANALYSIS BEFORE SHIPMENT TO THE FIELD (μS/cm)

$\bar{x}$ = _____ s = _____

Laboratory Values After Use In The Field:

Field Site #	Lab Value (μS/cm)	Date of Lab Analysis	Analyst's Initials

FIELD pH REFERENCE SOLUTION

DATE OF PREPARATION OF
0.1N H_2SO_4 STOCK SOLUTION _____

_____
(Analyst's Signature)

VOLUME OF STOCK TAKEN _____

FINAL DILUTION VOLUME OF
FIELD pH ELECTRODE TEST SOLUTION _____

DATE OF PREPARATION
OF TEST SOLUTION _____

LABORATORY ANALYSIS BEFORE SHIPMENT TO THE FIELD (pH)

$\overline{pH}$ = _____ s = _____

LABORATORY ANALYSIS OF ALIQUOTS RETURNED FROM THE FIELD

Field Site #	Lab Values After Return		
	Date of Analysis	pH	Anal. Init.

FIELD QUALITY CONTROL AUDIT SAMPLE REPORT

SAMPLE # _____

Date of Preparation of Field Audit Sample: _____

Vol. of H_2SO_4 Stock Used: _____mL; Normality of H_2SO_4 Stock: _____

Date of H_2SO_4 Stock Preparation: _____

Vol. of KCl Stock Used: _____mL; Normality of KCl Stock: _____

Date of KCl Stock Preparation: _____

Final Dilution Volume of Field Audit Samples: _____mL;

_____
(Analyst's Signature)

LABORATORY ANALYSIS BEFORE SHIPMENT* TO THE FIELD

	Conductivity	pH
Average and Std. Dev.	_____	_____

LABORATORY ANALYSIS OF ALIQUOTS RETURNED FROM THE FIELD

SITE #	DATE OF LAB ANALYSIS	CONDUCTIVITY VALUE	pH VALUE	ANALYST'S INITIALS

* These data are for three laboratory aliquots which are analyzed before shipment of samples, are then refrigerated, and are reanalyzed with the samples returned from the field.

- - - - - -

CONDUCTIVITY METER/CELL ACCEPTANCE TEST REPORT

DATE OF TEST: _____

_____
(Analyst's Signature)

PREPARATION DATE OF
KCl REFERENCE SOLUTIONS: _____

METER TYPE/SERIAL NO. _____/_____

CONDUCTIVITY CELL TYPE/SERIAL NO. _____/_____

INDICATE WHETHER TEST OF _____METER OR _____CELL

CONDUCTIVITY VALUES OBTAINED FOR PRECISION TEST (0.0003M KCl SOLUTION)
(Section 3.5.1.1)

Aliquot 1: _____	Aliquot 6: _____
Aliquot 2: _____	Aliquot 7: _____
Aliquot 3: _____	Aliquot 8: _____
Aliquot 4: _____	Aliquot 9: _____
Aliquot 5: _____	Aliquot 10: _____

Average conductivity and
standard deviation: _____

CONDUCTIVITY VALUES OBTAINED FOR LINEARITY TEST (Section 3.5.1.2)

Normality KCl	Expected Conductivity (µS/cm)	Found Conductivity (µS/cm)
_____	_____	_____
_____	_____	_____
_____	_____	_____

Slope _____

Intercept _____

Linearity _____

Accepted _____ Rejected _____

CONDUCTIVITY ACCEPTANCE TEST SUMMARY

Meter Type/ Serial #	Cell Type/ Serial #	Date of Check	Linearity	Conductivity Value Average and Standard Deviation(µS/cm)	Number of Values	Anal. Initials

pH METER/ELECTRODE ACCEPTANCE TEST REPORT

DATE OF TEST: _____

_____
(Analyst's Signature)

PREPARATION DATE OF
pH ELECTRODE REFERENCE SOLUTION: _____

NORMALITY OF pH ELECTRODE REFERENCE SOLUTION: _____

Meter Type/Serial No. _____/_____

pH Electrode Type/Serial No. _____/_____

Indicate whether test of _____meter or _____electrode

pH VALUES OBTAINED:

4.0(3.0) Buffer before:	_____	Aliquot 6:	_____
7.0(6.0) Buffer before:	_____	Aliquot 7:	_____
Aliquot 1:	_____	Aliquot 8:	_____
Aliquot 2:	_____	Aliquot 9:	_____
Aliquot 3:	_____	Aliquot 10:	_____
Aliquot 4:	_____	4.0(3.0) Buffer after:	_____
Aliquot 5:	_____	7.0(6.0) Buffer after:	_____

pH ELECTRODE REFERENCE SOLUTION: (Section 3.5.2)

Calculated pH of reference solution: _____

Average pH and standard deviation: _____

Check One: Accepted _____ Rejected _____

pH ACCEPTANCE TEST SUMMARY

Meter Type/ Serial #	Electrode Type/ Serial#	Date of Ref Soln. Prep.	Date of Check	pH Value Average and Standard Deviation	Number of Values	Anal. Initials

CERTIFICATION OF WORKING WEIGHTS TO NBS-TRACEABLE STANDARDS

DATE OF CERTIFICATION: _____

WEIGHT SET SERIAL #: _____ (Analyst's Signature)

BALANCE 0	_____	BALANCE 0	_____
NBS 1kg	_____	NBS 1kg	_____
NBS 5kg	_____	NBS 5kg	_____
TEST 1kg	_____	TEST 1kg	_____
TEST 5kg	_____	TEST 5kg	_____
* * *		* * *	
BALANCE 0	_____	BALANCE 0	_____
NBS 1kg	_____	NBS 1kg	_____
NBS 5kg	_____	NBS 5kg	_____
TEST 1kg	_____	TEST 1kg	_____
TEST 5kg	_____	TEST 5kg	_____
* * *		* * *	
BALANCE 0	_____	BALANCE 0	_____
NBS 1kg	_____	NBS 1kg	_____
NBS 5kg	_____	NBS 5kg	_____
TEST 1kg	_____	TEST 1kg	_____
TEST 5kg	_____	TEST 5kg	_____

SUMMARY: (Section 3.5.4)

Average and Standard Deviation

BALANCE 0	_____	TEST 1kg	_____
NBS 1kg	_____	TEST 5kg	_____
NBS 5kg	_____		

Check One: Accepted _____ Rejected _____

THERMOMETER CALIBRATION REPORT

DATE OF CALIBRATION: _____

IDENTIFICATION NUMBER: _____

_____
(Analyst's Signature)

Certified Thermometer (°C)	Test Thermometer (°C)	Correction (°C) (Section 3.3.4)
_____	_____	_____
_____	_____	_____
_____	_____	_____

Check one: Accepted _____ Rejected _____

4.0 LABORATORY PROCEDURES

The laboratory procedures herein are for chemical measurements and analyses of precipitation samples. Methods include analyses for pH, specific conductance, acidity, NH_4^+, PO_4^{-3}, SO_4^{-2}, NO_3^-, Cl^-, F^-, Na^+, K^+, Ca^{++}, Mg^{++}, and dissolved Al, Cd, Cu, Fe, Pb, Mn and Zn. Detection limits for these procedures will vary with instruments and conditions, but representative detection limits, concentration ranges, precision and bias are presented in each method. Brief discussions of the methods are presented in this section with the full text of the procedures in the appendices.

4.1 GRAVIMETRIC MEASUREMENTS

In both the field and the central laboratory the volume of rainwater is determined by measuring the mass of the rain and multiplying the mass by 1 g/cm^3 to obtain the volume. The mass of rain is measured in the field to determine the rain collector efficiency (compared to that of the rain gauge), and the mass of the sample sent to the central laboratory is measured as a check to determine if leakage occurred in shipment. The sample should be sent to the central laboratory in plastic buckets or plastic bottles. If sent in the bucket, the sample is weighed at the field station and by the central laboratory. If transferred to polyethylene bottles, the sample is weighed in the bucket at the field station and the weight entered on the Field Data Form. The volume received is estimated by the central laboratory. If collected in bottles, the sample is weighed by both the field station and the central laboratory.

4.1.1 Apparatus

The balance should have a capacity of 20 kg and a precision of at least $\pm$10 g (for bucket weighing) or 1 kg with a precision of $\pm$0.5 g (for bottle weighing).

4.1.2 Calibration

Calibrate the balance monthly, using weights traceable to NBS-traceable weights. Store the NBS-traceable weights (primary references) in the laboratory, certify the working calibration weights against these, and complete the Certification of Working Weights to NBS report (Section 3.4). Recertify all working calibration weights against the NBS-traceable weights every six months. The procedure for weight certification is the same as for field balances (Section 3.3.4). Calibrate each balance using weights close to those actually measured. Calibrate high-capacity balances, using 1.0 and 5.0 kg weights.

4.1.3 Procedure

To obtain the weight of the sample received in the laboratory, use the following procedure. During the procedure, avoid breathing on the sample to avoid NH_3 contamination.

a) Be sure that the balance is level, and then adjust its zero knob so that the balance zeroes (see manufacturer's instructions).

b) Place the bucket without its lid or the plastic bottle on the balance pan, and weigh it to the nearest 10 grams or place the bottle on the balance and weigh it to the nearest gram.

c) Record the weight on the bucket or bottle label and on a data sheet.

d) Subtract the initial weight of the empty container (recorded on the Field Data form) from the final weight of container plus the sample to obtain the sample weight shipped.

4.2 pH MEASUREMENT

pH is measured in precipitation samples electrometrically by using either a pH half cell with a reference electrode or a combination electrode. The pH meter/electrode(s) measurement system is calibrated

with two reference buffer solutions that bracket the expected sample pH. The acceptable method for the measurement of pH is presented in Appendix C.

4.3 CONDUCTANCE MEASUREMENT

Specific conductance is measured in precipitation samples electrolytically using a conductance cell. The conductance meter/cell system is calibrated using potassium chloride solutions of known specific conductances in the range of precipitation samples. The acceptable method for the measurement of specific conductance can be found in Appendix D.

4.4 SAMPLE FILTRATION

After measuring the pH and specific conductance, but before measuring the other analytes, filter the rainwater sample. Use vacuum or pressure filtration to minimize exposure of the sample to laboratory air. The vacuum apparatus can be a bell jar (ground-glass plate) of sufficient size to contain a 250-mL (8-oz) bottle, or it can be the apparatus used by the Illinois State Water Survey for the National Atmospheric Deposition Program (NADP). The recommended filter material is a 0.45- m membrane filter (Millipore HA); the filter funnel should be plastic. Before each filtration, thoroughly rinse the apparatus, including the filter, with 200 mL deionized water and a portion of sample if there is a sufficient amount. Filter the sample as quickly as possible, and cap the labeled sample bottle containing the filtrate to minimize contact with laboratory air. If the filtered particulates are to be analyzed, they should be oven-dried at 60°C for one hour and stored in glass vials.

4.5 ACIDITY MEASUREMENTS

Two methods for measuring acidity are acceptable. The first method measures both strong and total acidity, while the second method only measures total acidity.

In the first method, strong and total acidity are measured in the precipitation samples by titrating the sample with dilute sodium hydroxide solution and following the titration electrometrically with a pH half cell and reference electrode or a combination electrode. The titration is continued until a pH of 10.4 is reached. A method first introduced by Gran (1) is used to calculate the strong and total acidity. The Gran functions are plotted versus the volume of titrant added. The total and strong acidity are obtained by extrapolating the linear portions of the curve to zero. Weak acidity is obtained by subtracting the strong acidity from the total acidity. This method can be found in Appendix E.

In the second method, total acidity is measured by titrating the sample electrometrically with a combination pH electrode to a pH of 8.3. The total acidity is calculated from the volume and concentraiton of titrant. This method is included with the above method in Appendix E.

4.6 DETERMINATION OF SULFATE

Sulfate is measured in the precipitation samples by one of two methods; ion chromatography or automated colorimetry using barium-methylthymol blue. The ion chromatographic method utilizes ion exchange resins for separation and conductivity for detection. After a sample is injected onto the separator column containing the ion exchange resin, an eluent is used to pump the sample through the column. The anions are separated depending on their radius and valence. After eluting from the

separator column, the ions are converted to the corresponding acids which are detected in the conductance cell against a background of neutralized eluent.

The automated colormetric method of analysis for sulfate uses the blue colored barium-methylthymol blue complex to determine the concentration of sulfate in the sample. After interfering cations are removed by an ion exchange column, the sulfate in the sample reacts with barium chloride to form barium sulfate. Excess barium ions react with the methylthymol blue to form the chelate. Thus, the concentration of the sulfate in the sample is inversely proportional to the intensity of the blue-colored chelate which is measured colorimetrically at 460 nm.

The ion chromatographic method is presented in Appendix F, while the colorimetric method can be found in Appendix G.

4.7 DETERMINATION OF NITRATE

Nitrate is measured in the precipitation samples either by ion chromatography or automated colorimetry using cadmium reduction. The ion chromatographic method is identical to the method described in Section 4.6. It can be found in Appendix F.

The colorimetric method uses a color reagent made from NEDA (n-(1-naphthyl)-ethylene-diamine dihydrochloride), phosphoric acid and sulfanilamide to develop a color that can be used to measure the nitrate present in a sample. After mixing with ammonium chloride, the nitrate in the sample is reduced in a copper-cadmium column to nitrite. The nitrite is mixed with the color reagent and forms a reddish-purple complex which is measured colorimetrically at a wavelength of 520 nm. The concentration of the original nitrate in the sample is directly proportional to the intensity of the color complex formed by the nitrite. This method can be found in Appendix H.

4.8 DETERMINATION OF CHLORIDE

Chloride is measured in precipitation samples by chemically suppressed ion chromatography or automated colorimetry using thiocyanate. The ion chromatographic method is identical to the method described in Section 4.6. It can be found in Appendix F.

The colorimetric method of analysis for chloride uses a colored ferric thiocyanate complex to determine the concentration of chloride in the sample. The chloride ions react with mercuric thiocyanate liberating thiocyanate ions which reacts with ferric ions. The concentration of the original chloride ions in the sample is directly proportional to the intensity of the colored ferric thiocyanate complex. This method is included with this manual as Appendix I.

4.9 DETERMINATION OF ORTHOPHOSPHATE

Orthophosphate is measured in the precipitation samples either by ion chromatography or automated colorimetry using the phosphomolybdenum blue complex. The ion chromatographic method is identical to the method discussed in Section 4.6. It can be found in Appendix F.

The colorimetric method involves developing the phosphomolybdenum blue complex by mixing the sample with an acidified solution of ammonium molybdate, ascorbic acid and antimony potassium tartrate, and passing the mixture through a 37°C temperature bath. The concentration of orthophosphate is proportional to the intensity of the phosphomolybdenum blue complex measured colorimetrically at 880 nm. This method is presented in Appendix J.

4.10 DETERMINATION OF FLUORIDE

Fluoride is determined in the precipitation samples using an ion-selective electrode with a reference electrode. The meter/electrode system is calibrated with fluoride solutions of known concentrations. The specified method is presented in Appendix K.

4.11 DETERMINATION OF AMMONIUM

Ammonium is determined in the precipitation samples by one of three methods; ion chromatography, ion-selective electrode or automated colorimetry using the indophenol blue complex.

The ion chromatographic method utilizes ion exchange resins for separation and conductance for detection. After a sample is injected onto the separator column containing the ion exchange resin, an eluent is used to pump the sample through the column. The cations are separated depending on their radius and valence. After eluting from the separator column, the ions are converted to the corresponding bases which are detected in a conductance cell against a background of neutralized eluent. This method can be found in Appendix F.

The second acceptable method for determining ammonium is to use a gas sensing ion-selective electrode with a reference electrode. Ammonium ion is converted to ammonia gas when the pH of the sample is adjusted to pH 11-14. An electrode potential develops across the sensing membrane in proportion to the ammonia concentration in solution. The meter/electrode system is calibrated with ammonium solutions of known concentrations. This method is included as Appendix L of this document.

The third method for determining ammonium in precipitation samples is the automated colorimetric method using the indophenol blue complex. After removing cations that could form hydroxide complexes, the sample is

mixed with alkaline phenol and hypochlorite to form the indophenol blue complex. Sodium nitroprusside is added to precipitation samples to intensify the color. The concentration of the ammonium is proportional to the intensity of the indophenol blue complex measured colorimetrically at 630 nm. This method can be found in Appendix L with the second method described above.

4.12 DETERMINATION OF SODIUM, POTASSIUM, MAGNESIUM AND CALCIUM

Sodium, potassium, magnesium and calcium are measured in precipitation samples either by chemically suppressed ion chromatography or flame atomic absorption spectrophotometry. The ion chromatographic procedure is identical to the one described in Section 4.11 for ammonium. It can be found in Appendix F of this document.

The flame atomic absorption spectrophotometric method of analysis for these metals involves aspirating the sample into a flame where the cations are converted to ground state atoms. A light beam from a hollow cathode lamp which emits light specific to the metal of interest is passed through the flame, isolated by a monochromator and measured by a photodetector. The ground state atoms of the metal of interest absorb the light. The concentration of the metal in the sample is proportional to the amount of light absorbed in the flame. This method is presented in Appendix M.

4.13 DETERMINATION OF ALUMINUM, CADMIUM, COPPER, IRON, LEAD, MANGANESE AND ZINC

Aluminum, cadmium, copper, iron, lead, manganese and zinc are measured in precipitation samples by graphite furnace atomic absorption spectrophotometry. Microliter quantities of sample are deposited into a graphite tube where it is electrothermally dried, pyrolyzed and atomized.

A light beam from a hollow cathode lamp which emits a spectrally pure line source of light specific to the metal of interest is passed through the atoms which are at ground state. The atmos of the specific metal absorb the light. The concentration of the metal is proportinal to the amount of light absorbed in the flame. This method can be found in Appendix N.

4.14 REFERENCE

1. Gran, G., "Determination of the Equivalent Point in Potentiometric Titrations," Acta Chemica Scandinavica, 4, 1950, p. 559.

Appendix A

AEROCHEM METRICS PRECIPITATION COLLECTOR MAINTENANCE MANUAL

State Water Survey Division
ATMOSPHERIC CHEMISTRY SECTION
AT THE
UNIVERSITY OF ILLINOIS

ENR
Illinois Department of
Energy and Natural Resources

SWS Contract Report 348

AEROCHEM METRICS PRECIPITATION COLLECTOR MAINTENANCE MANUAL

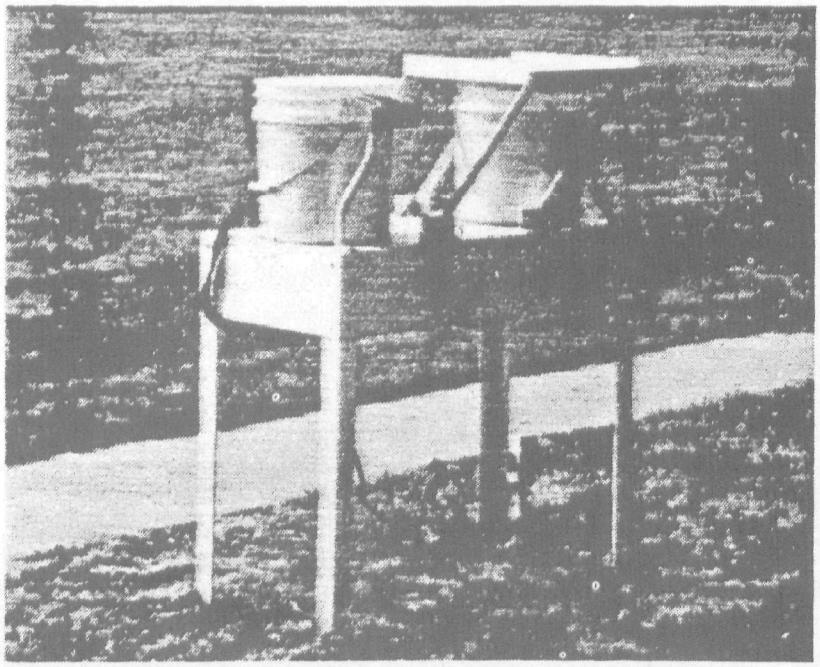

SWS Contract Report 348

AEROCHEM METRICS PRECIPITATION COLLECTOR MAINTENANCE MANUAL

Prepared By

Scott Dossett[1]

Central Analytical Laboratory
Atmospheric Chemistry Section
Illinois State Water Survey
605 E. Springfield Avenue
P.O. Box 5050, Station A
Champaign, IL 61820

September, 1984

[1]Prepared under the contract with Colorado State University for the National Atmospheric Deposition Program. This report has not yet been reviewed and approved by NADP/NTN.

TABLE OF CONTENTS

SECTION	TITLE	PAGE
1.	INTRODUCTION	1-1
2.	PARTS REFERENCE LIST	2-1
3.	PICTORIAL GUIDE TO PARTS	3-1
4.	TROUBLE SHOOTING	4-1
	4.1. Sensor Unit	4-1
	4.2. Motor Box Unit	4-2
	4.3. Clutch Unit	4-4
	4.4. Flow Charts	4-7
5.	COMPONENT REPLACEMENT AND ROUTINE SERVICING	5-1

1. INTRODUCTION

The Aerochem Metrics wet/dry collector is a fairly simple device which has proven to be reliable and efficient for capturing rainfall. This guide is intended to address trouble shooting and repair of the major collector components, namely the motor box, sensor, and clutch units. Simple or site specific repairs such as battery checking, 110VAC power supply, and instrument mounting are not discussed since they are best diagnosed and corrected by site personnel.

Section 5 describes some routine maintenance procedures. Part 2 of that section prescribes weekly checks which are essential to obtain the high quality wet-deposition only chemistry required by the modern research community. PLEASE READ THIS SECTION.

IF YOU EXPERIENCE A COLLECTOR MALFUNCTION

(1) Please inform the CAL; call 217/333-0249, especially when replacement parts are needed or if sample quality has been affected.

(2) Briefly describe the malfunction and indicate when it first occurred on the Field Observer Report Form of the sample affected. Continue to do this for each weekly sample until the malfunction is eliminated. Pay particular attention to how the wet-side bucket was exposed. Recall that when the sampler is operating correctly, the wet-side bucket should only be open during rain, snow, etc.

Example: "Sensor heater went out on Thursday: wet-side bucket remains open for several hours after the rain stops."

Refer to the NADP Instruction Manual for Site Operations for a description of sample types.

Revision No. 0
Date: Sept. 5, 1984

2. PARTS REFERENCE LIST

This list identifies parts by name and assigns part numbers that are used in conjunction with the "Pictorial Guide to Parts" section which follows. Also, all part numbers are cross-referenced to a corresponding photo number.

Some part numbers are referenced in the "Trouble Shooting" section of this text; others are included so that this additional detail can be referenced in future communications. (These numbers are not manufacturer's order or part numbers.)

Part Name	Part No.	Photo No.
sensor unit	1	1
collector main frame	2	1
sensor screws	3	1
sampling bucket holder	4	1
sensor grid	5	1
sensor plate	6	1
motor box screws	7	2 and 4
sampling bucket holder screws	8	2 and 3
motor box unit	9	3
clutch arm unit	10	3 and 6
clutch arm machine bolt	11	3
counterweight(s)	12	3
Waldes ring	13	3
push rod	14	3
counter weight rod	15	3
lid drive arms	16	3
lid tension springs	17	3
110V AC power cord	18	3 and 4
event recorder terminal	19	3 and 4
sensor unit socket	20	4
12V DC power lugs	21	4
12V DC circuit fuse	22	4
110V AC circuit fuse	23	4
event recorder circuit fuse	24	4
motor box stop switches	25	5
event recorder/wet mode heater switch	26	5
drive motor shaft	27	5
clutch tooth	28	6
thrust collar with set screw	29	6
clutch tooth tension plate	30	6
switching magnets	31	6
clutch tooth tension spring	32	6

3. PICTORIAL GUIDE TO PARTS

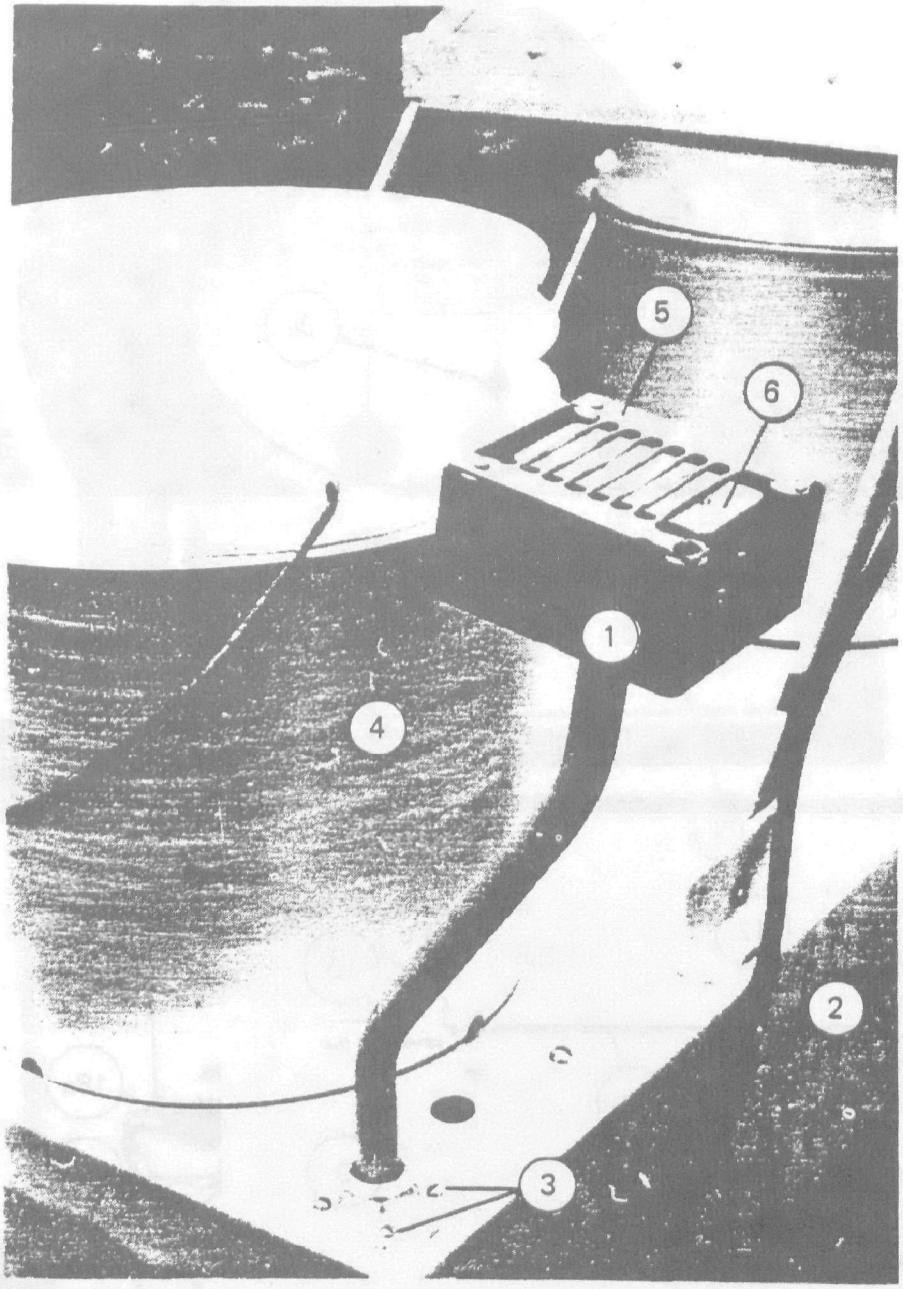

PHOTO #1

COLLECTOR MAINFRAME/SENSOR

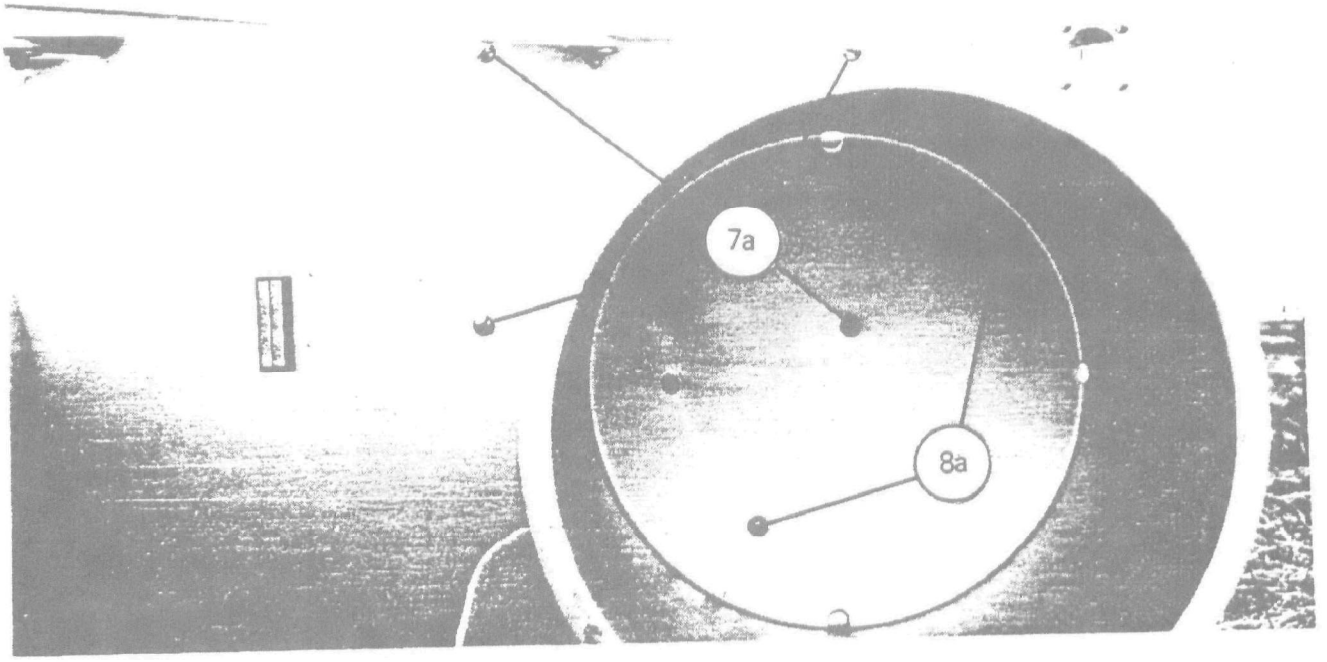

PHOTO #2
COLLECTOR MAINFRAME (TOP)

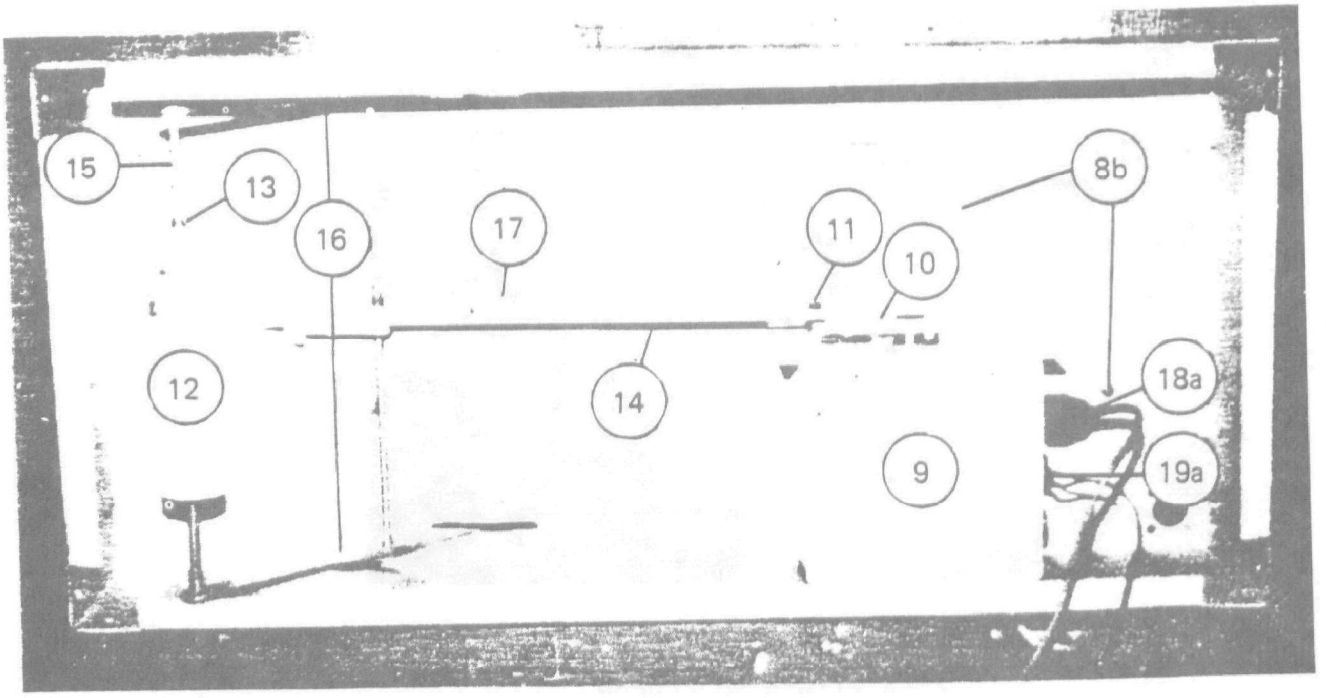

PHOTO # 3
COLLECTOR MAINFRAME (UNDERSIDE)

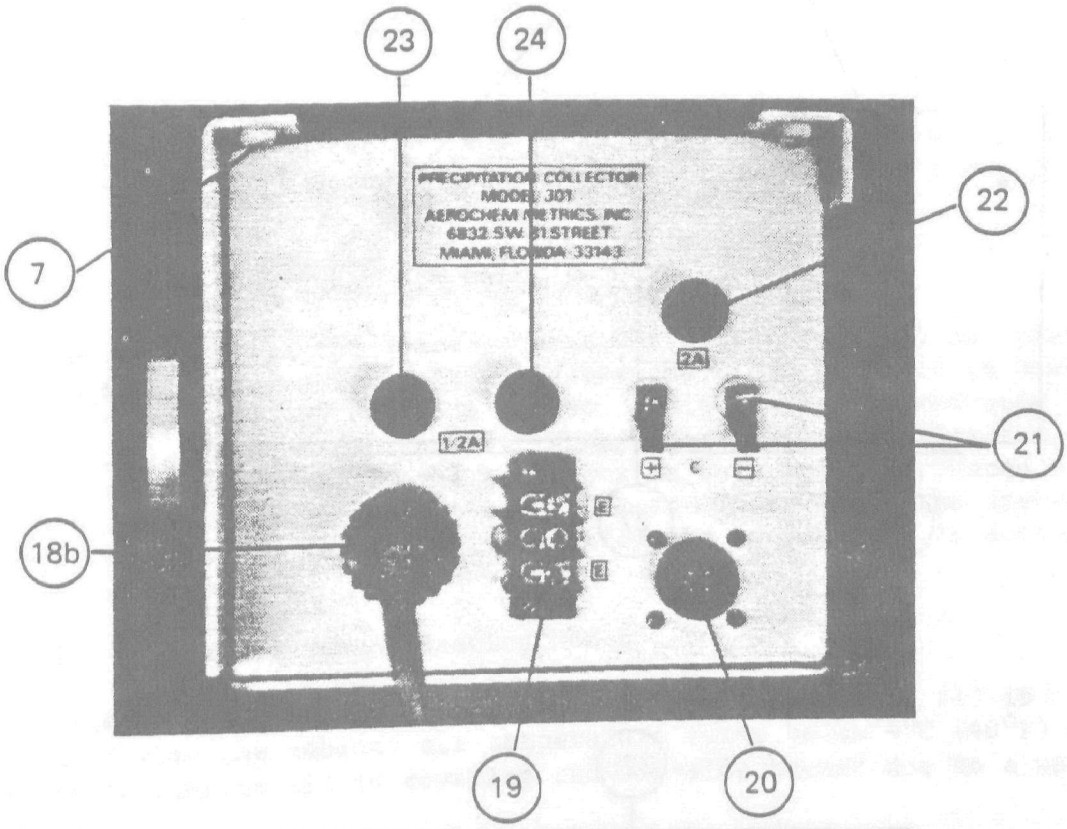

PHOTO #4
MOTOR BOX (FRONT)

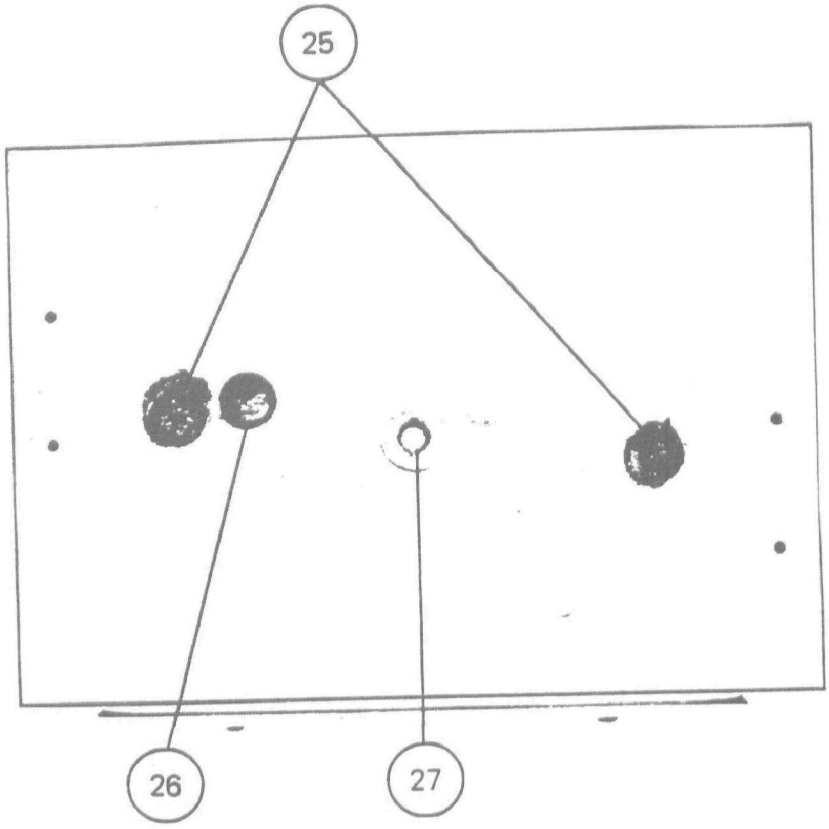

PHOTO #5
MOTOR BOX (SIDE)

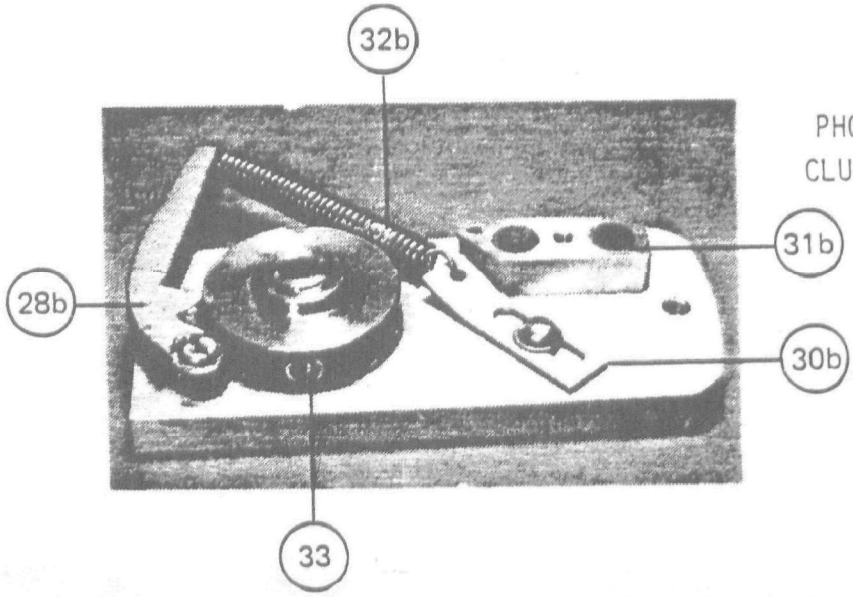

PHOTO #6
CLUTCH ARM

4. TROUBLE SHOOTING

4.1 Sensor Unit-"What Does It DO?"

The sensor unit has two functions: to signal the movement of the collector lid by activating the motor box unit when the start and stop of precipitation is detected, and to regulate two heating modes, the ambient mode to melt snow and the wet collect mode to dry water from the wetted sensor.

(1) Activating Motor Box Unit

When water fills the space between the sensor grid (5) and plate (6) (rain begins), the sensor unit activates the motor box unit to move the collector lid over the dry-side bucket. This leaves the wet-side bucket exposed to capture precipitation. When water no longer fills this space (the rain slows or stops), the motor box is once again activated to move the collector lid over the wet-side bucket. This leaves the dry-side bucket exposed. In serving this function the sensor unit is acting as a simple on/off switch.

(2) Regulating Sensor Heating Modes

A heater fixed to the sensor plate in the sensor unit (1) is activated when the ambient air temperature falls below 4°C (40°F) or when the collector lid is covering the dry-side bucket due to a wetted sensor.

The ambient heater mode is controlled by a temperature sensitive electrical component called a thermistor, mounted to the sensor plate. This component turns on the heater at a low power setting when the sensor plate drops below 4°C (40°F) and turns it off again when the plate warms above that temperature. In this fashion the heater melts snow and ice so that the resulting liquid can bridge the sensor grid and plate, allowing the collector to open.

The wet collect mode of the sensor heater is activated when the collector lid is covering the dry side bucket due to a wetted sensor. In this position, the event recorder/wet mode heater switch on the left side of the drive motor shaft (27) is tripped by the clutch unit switching magnets (31). This turns on both the wet collect mode of the sensor heater and energizes the event recorder terminal (19) with a 14 ± 3 volt DC current. In this mode the thermistor attached to the sensor plate budgets the current flow to the heater so that the plate temperature is regulated to a 50°C maximum. Five to ten minutes typically pass after the heater has been activated before it reaches full heat.

Sensor Units - "What Goes Wrong"

When the sensor unit is faulty, some of the following symptoms may be observed:

Symptom	See Flow Chart
Collector lid stays over the dry-side bucket long after precipitation stops, sensor dries slowly (more than 30 minutes for rain), motor not running. (If motor is running, see Clutch Unit - What Goes Wrong.)	#1, page 4-8
Collector lid oscillates non-stop between buckets, sensor wet or dry	#5, page 4-12
Collector lid stays over wet-side bucket, sensor wet, motor not running. (If motor is running, see Clutch Unit - "What Goes Wrong".)	#6, page 4-13
Collector lid stays over dry side bucket, sensor dry, motor not running. (Again, if motor is running, see Clutch Units - "What Goes Wrong".)	#4, page 4-11
Sensor plate (6) snow covered or iced up.	#3, page 4-10

4.2 Motor Box Unit - "What It Does"

The motor box unit (9) houses a drive motor, power and control circuitry, and fuses (22, 23, and 24). One visible side of the unit is occupied by connectors, such as the sensor unit socket (20), event recorder terminal (19), etc., (see Photo #4). The other side (see Photo #5) is occupied by the drive motor shaft (27) and three switching magnets (25 and 26).

The motor box has two main functions: to power the lid mechanism between the wet and dry-side buckets, and to interact with the clutch unit to control the lid position.

(1) Power Function

In order to move the lid mechanism from bucket to bucket, the collector uses a small DC electric motor and gear cluster. These exit the motor box at the drive motor shaft (27). This shaft is a steel

half-round component to which the clutch arm unit (10) is fastened. Force is then passed through the clutch arm and a long push rod (14) to the lid drive arms (16). These lid drive arms, in turn, exit out the top of the collector mainframe and attach to the lid or roof of the collector.

(2) Motor Box/Clutch Interaction

As we have already mentioned, the sensor unit acts as the "on" switch which tells the motor box to move the lid to the dry bucket (or conversely the "off" switch which causes the collector to move the lid to the wet bucket.) The motor box components responsible for this interaction are the clutch arm switching magnets (31) and the motor box stop switches (25).

When the motor box receives a "wet" signal the dry collect stop switch, the one to the right of the motor shaft in Photo 5, releases. The clutch arm then moves counterclockwise stopping at the wet collect stop switch, which operates in tandem with the event recorder/wet mode heater switch (see 25 and 26). The clutch arm should stay in this position until the sensor signals "dry." This allows the wet collect stop switch to "release" and the mechanism to power to the dry collect stop switch, causing the wet collect bucket to be covered.

Motor Box Unit - "What Goes Wrong"

When the motor box unit is faulty, some of the following symptoms may be observed:

Symptom	See Flow Chart
Collector lid stays over the dry-side bucket long after precipitation stops, sensor dries slowly (more than 30 minutes for rain), motor not running. (If motor running, see Clutch Unit - "What Goes Wrong".)	#1, page 4-8
Collector lid stays over wet-side bucket, sensor wet, motor not running. (If running, see Clutch Unit - "What Goes Wrong".)	#6, page 4-13
Collector lid stays over dry-side bucket, sensor dry, motor not running. (If running, see Clutch Unit - "What Goes Wrong".)	#4, page 4-11
Collector lid oscillates non-stop between buckets, sensor wet or dry.	#5, page 4-12

4.3 Clutch Unit - "What It Does"

The clutch unit (10) has two main functions: (1) to act as a mechanical break or "fuse" in the drive system of the collector, and (2) to signal to the motor box the position of the lid of the collector, (i.e., the wet or dry mode).

(1) Fusing The Drive System

The clutch serves to protect the rest of the drive train from any damage due to a stoppage in its motion. Such cases are generally either caused by freeze downs, gross collector damage from blowover or tree limbs, or snow mounding high on the flat lids or on unheated snow roofs. In these cases the clutch works as follows (see Photo 5): from its normal position with the clutch tooth (28) in the thrust collar indent (29), one of the above cases causes the tooth to "pop out" of the indent. After a full rotation of the thrust collar the tension spring will again pull the tooth into the indent, beginning the cycle anew. Since the thrust collar should be secured to the motor shaft by the set screw (29) the thrust collar must turn with the motor shaft. For efficient operation, the clutch tooth tension spring (32) is stretched so as to hold the clutch tooth into the thrust collar indent. In this way the force produced by the drive motor shaft is then transferred through the clutch to the rest of the collector lid drive mechanism. In addition the clutch locks this mechanism, keeping the lid tightly secured over the appropriate sampling bucket.

(2) Signaling The Motor Box

As mentioned in the motor box unit description, the clutch interacts with the motor box stop switches (25) to control the position of the lid mechanism. In order to properly signal the stop switches, switching magnets (31) are built into the clutch arm; their position reflects the relative position of the lid mechanism. As the clutch arm and hence the lid mechanism near their stop positions, the appropriate switch releases or activates to fix the lid over either the wet or dry bucket (see Photos 5 and 6).

Clutch Unit - What Goes Wrong

When the clutch unit is faulty or out of adjustment, some of the following symptoms may be observed:

Symptom	Cause
Motor running, lid mechanism not moving. (Collector on wet side, dry side or in between.)	In this case the clutch mechanism is probably worn or out of adjustment. It should be serviced using the following steps:

Symptom	Cause
	1. Remove the clutch arm machine bolt (11), thus separating the clutch unit from the rest of the collector lid mechanism.
	2. Loosen the thrust collar set screw (29) and gently pry the clutch unit off the drive motor shaft (27). NOTE: to expose the set screw simply start the motor running stop the clutch arm with your hand and unplug the collector when the set screw becomes visible.
	3. Examine the clutch unit: if the thrust collar indent or the clutch tooth (28) appear severely rounded then the clutch probably merits replacement. (Call us here at CAL.) If they do not then the force with which the tooth is held into the indent should be increased.
NOTE: The clutch spring should not be stretched so far as to "freeze" the clutch. The drive motor has a maximum torque rating and can be damaged if the clutch will not "pop out." After re-setting the tension spring, be certain the clutch can still be popped out by the drive motor.	4. ADJUSTING THE CLUTCH TOOTH TENSION SPRING. The tooth/indent pressure is adjusted via the position of the clutch tooth tension plate (30). The further away from the thrust collar the plate is pushed the more tension is produced. a) Mark the tension plate's original position with a pencil; b) Loosen the tension plate screw; c) Move the plate out 1/4"; d) Test the clutch (see NOTE aside);

Symptom	Cause
	e) slide clutch unit back into the drive shaft and tighten the set screw; f) Plug in the collector and hold the clutch unit to make certain it will function as described; g) Reattach the machine bolt and drive arm of the lid mechanism.

Some trial and error may be necessary to reach an appropriate clutch spring tension.

Symptom	Cause
Collector will not shut off, continually recycling between buckets.	In this case the motor box has malfunctioned (reference Flow Chart #5) or the clutch unit position is incorrect. In order to properly signal the motor box unit, the clutch must be within 1/4 inch. This is necessary so that the switching magnets are close enough to trigger the motor box stop switches (25) and the event recorder/wet mode heater switch (26). To be certain the clutch is on all the way, loosen the set screw (29) and gently tap the clutch with a small hammer or screwdriver handle, then retighten the set screw.

The next section is a series of flow charts which should be useful in diagnosing the problems with a malfunctioning collector.

4.4 FLOW CHARTS

Below are listed the most common failure symptoms experienced with the Aerochem Metrics wet/dry collector, at least those with which most often come to our attention here at the CAL. Hopefully this list can refer you to an appropriate flow chart so that you can begin the trouble shooting steps necessary to get your collecor back into operation.

Symptom	Flow Chart(s) No.
Collector stays open long after precipitation event ends	1
Event recorder not working	1 and 2
Sensor ices up during cold weather	3
Collector stuck over dry-side bucket	4
Collector cycling continuously	5
Collector stays on wet-side bucket although sensor grid and plate are shorted	6

**Note: ALL OF THE FOLLOWING FLOWCHARTS ASSUME THAT THERE IS ADEQUATE POWER TO THE UNIT, INCLUDING THAT THE FUSES ARE INTACT.

FLOW CHART #1
COLLECTOR STAYS OPEN LONG AFTER PRECIPITATION EVENT STOPS

WET COLLECT HEATER
IN SENSOR NOT WORKING

↓

CHECK THAT THE EVENT RECORDER (ER) IS OPERATIONAL AND/OR THAT A 14± 3VDC CURRENT IS PRESENT AT THE EVENT RECORDER TERMINAL (19). NOTE: THIS REQUIRES THAT THE COLLECTOR BE IN THE WET COLLECT MODE.

IF

ER OK OR
TERMINAL
CHARGED

THEN

↓

SENSOR UNIT BAD
(CALL THE C.A.L.)

IF

ER NOT WORKING
AND INCORRECT
VOLTAGE FROM
TERMINAL

THEN

↓

1) IF VOLTAGE OUTSIDE RANGE
THE MOTOR BOX IS BAD
(CALL THE C.A.L.)

2) IF NO VOLTAGE SEE
FLOWCHART #2

FLOW CHART #2
EVENT RECORDER NOT WORKING

NO POWER TO ER TERMINAL (19)
NOTE: DON'T FORGET TO CHECK ER TERMINAL FUSE AT 24

CHECK

CLUTCH UNIT TO MOTOR BOX UNIT CLEARANCE

IF

CLUTCH UNIT LOOSE ON DRIVE MOTOR SHAFT (27) OR MORE THAN 1/8-1/4 INCH AWAY FROM MOTOR BOX

THEN

REPOSITION CLUTCH UNIT (SEE A BELOW)

IF

CLUTCH UNIT TIGHT ON DRIVE MOTOR SHAFT (27) AND $\leq$ 1/4 INCH FROM MOTOR UNIT

THEN

MOTOR BOX UNIT IS FAULT (CALL THE C.A.L.)

A problem exists if the clutch unit is too far from the motor box unit. The magnets in the clutch can only trip the switches in the motor box if they are within ~1/4 inch. See the text of this guide, Section 4.3 page 4-6 for more information on clutch position.

FLOW CHART #3
SENSOR ICES UP IN COLD WEATHER AND SNOW

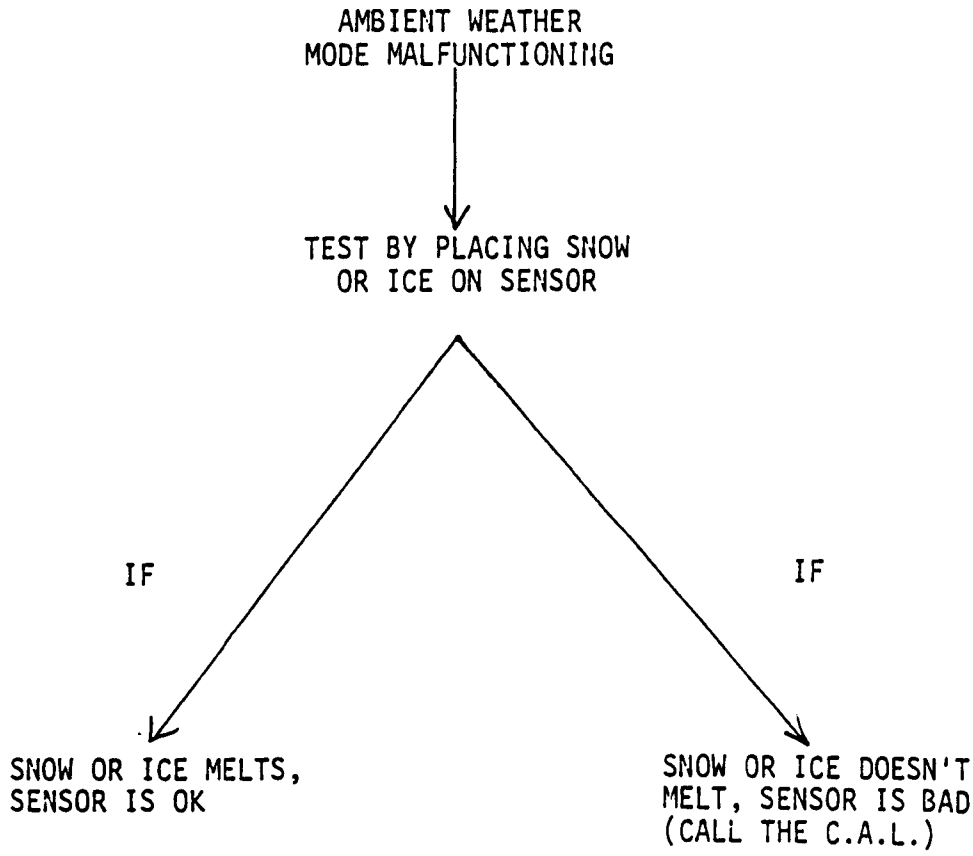

FLOW CHART #4
COLLECTOR STUCK OVER DRY-SIDE BUCKET

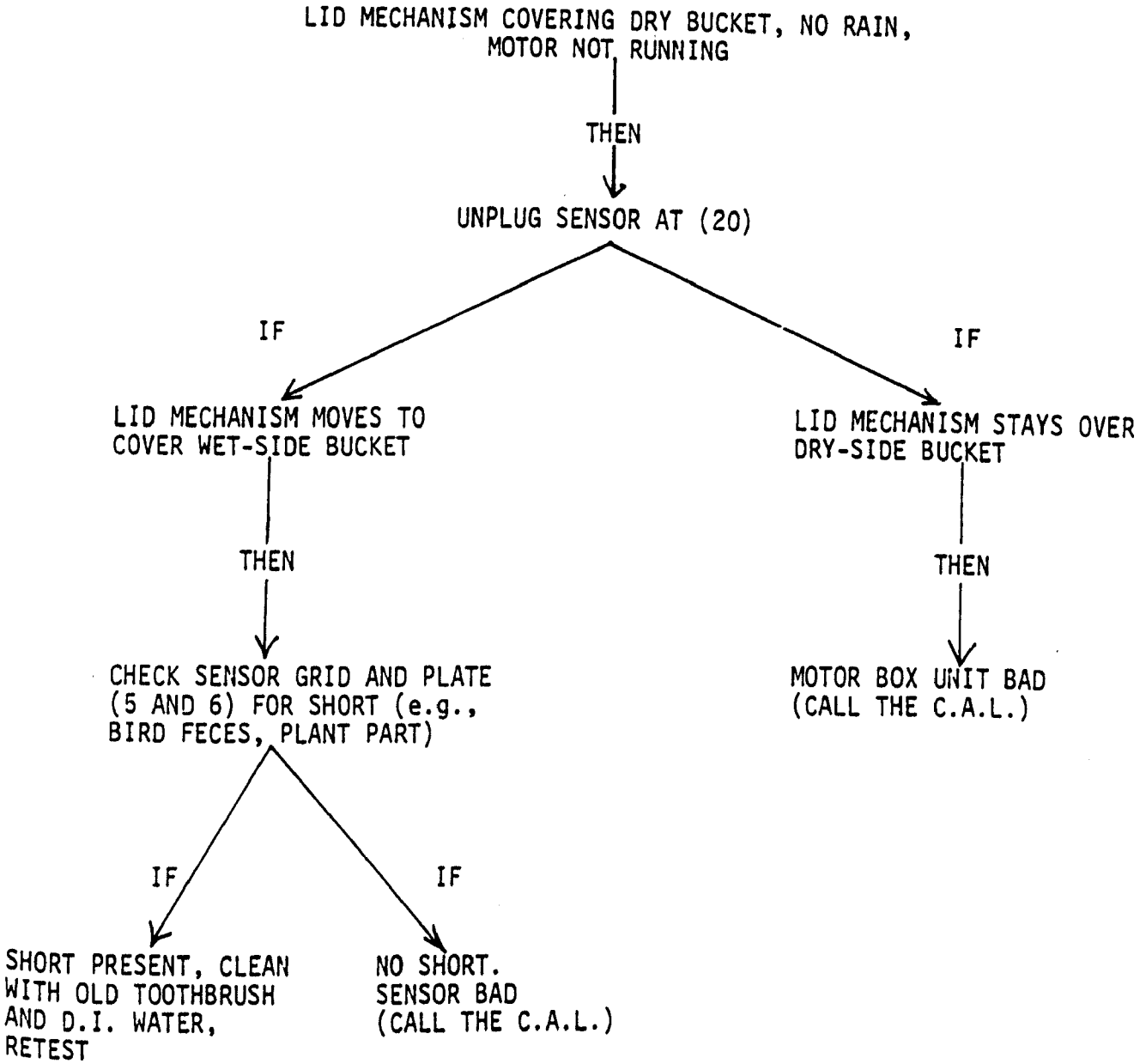

FLOW CHART #5
COLLECTOR CYCLING CONTINUALLY

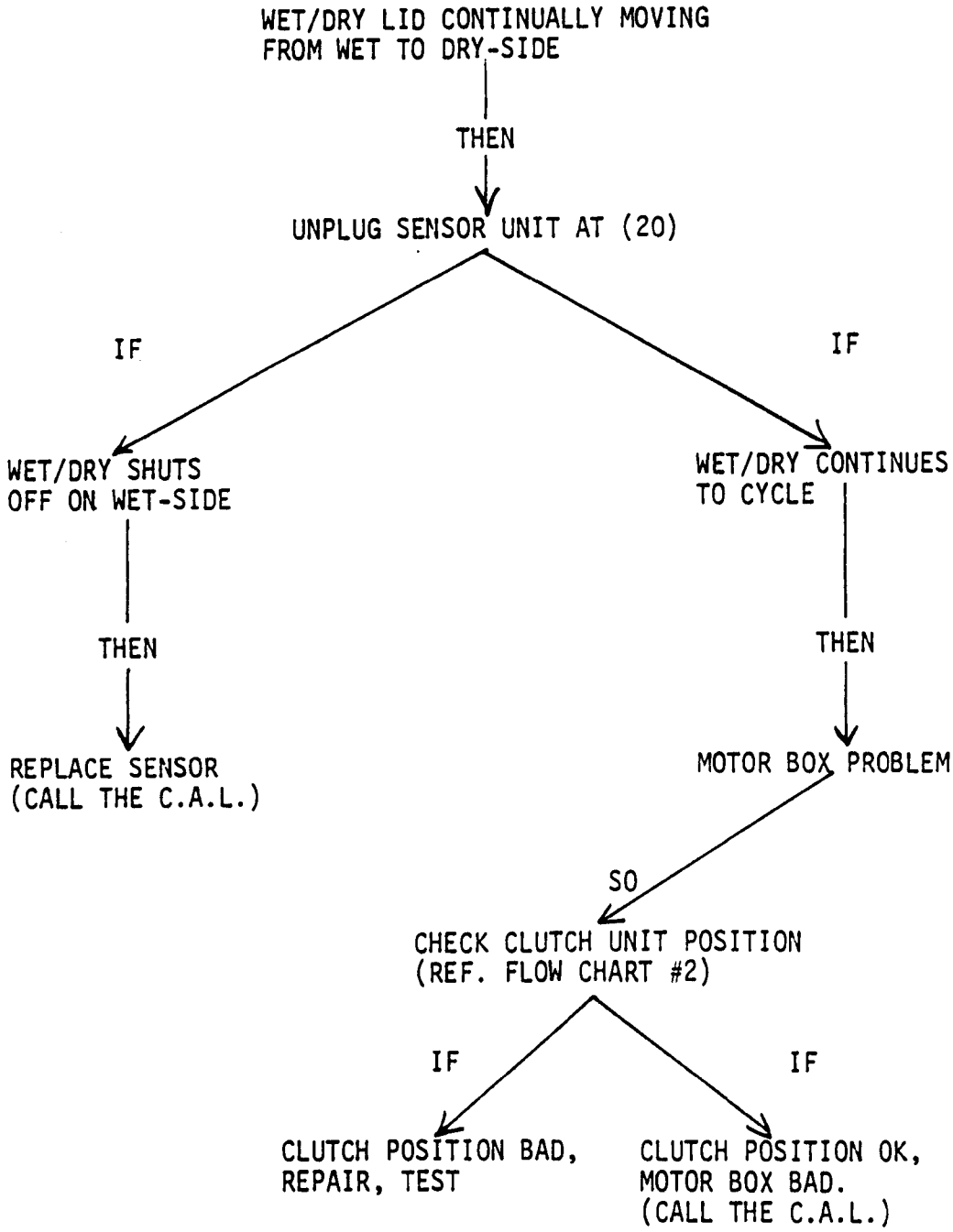

FLOW CHART #6
COLLECTOR NOT OPENING TO EXPOSE WET-SIDE
IN HEAVY RAINFALL

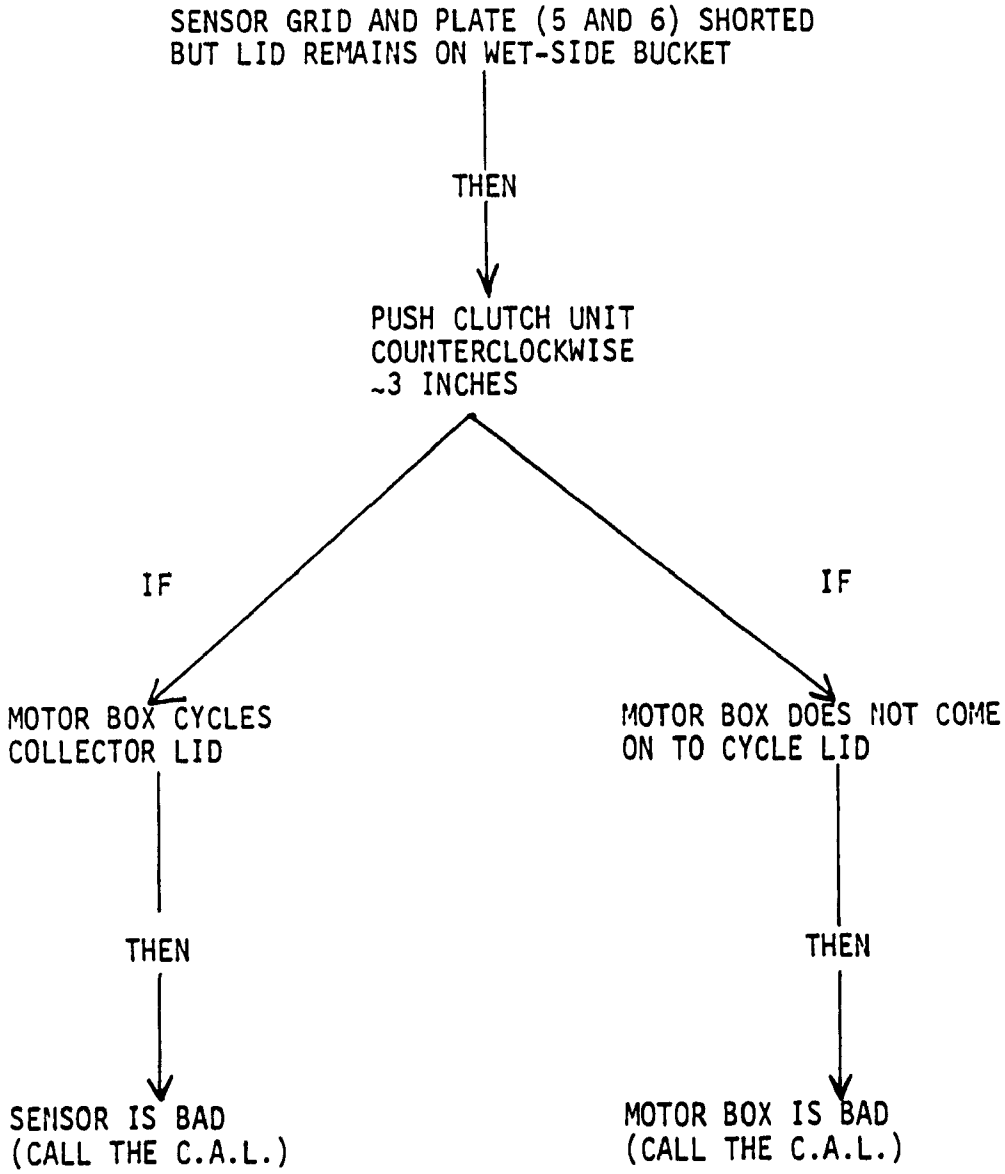

5. COMPONENT REPLACEMENT AND ROUTINE SERVICING

1. Component Replacement

a. Motor box - This component can be removed by separating the sensor plug from the sensor socket (20), removing the clutch arm machine bolt (11), and then removing the four motor box attachments (7) from the collector main frame (2). Threaded inserts are used in the motor box so there are no nuts to replace.

WARNING: The motor box will literally fall out when the last of the four screws are removed. Make plans to support it in some fashion.

Last, with the box on the ground and in easy access, remove the event recorder leads from their terminal (19).

b. Sensor unit - This component is easily removed by separating the sensor socket (20) from the sensor plug in and removing the four sensor attachments (3). Again, the main frame is equipped with threaded inserts so there are no nuts to contend with.

c. Clutch unit - The clutch can be removed from the motor drive shaft by choosing an appropriately sized Allen wrench and loosening the set screw at (29). Then simply pry the clutch assembly off using a sturdy screwdriver. Please reference page 10 of this manual for additional remarks concerning replacement and maintenance.

Remember to return all used components to the manufacturer promptly.

2. Routine Servicing

In general, the Aerochem Metrics wet/dry collector is maintenance free. The one routine service chore which all sites should perform is the testing of the sensor "switching" and heating functions. It is recommended that these tests be incorporated into weekly wet-side bucket changes using the steps listed below.

a) First, feel the sensor grid. Assuming it has not been raining, it should be cool.

b) Short the sensor grid and plate with water (water is better than metal for this test, due to its lower conductivity.)

c) Allow the lid mechanism to move over and cover the dry-side bucket. This step (1) checks the switching function of the sensor, (2) checks the lid driving mechanism of the collector, and (3) keeps the lid mechanism out of the way while you make your bucket change.

d) Change buckets, (reference NADP Instruction Manual for Site Operations).

e) After the collector has been open for at least 5 minutes, feel the sensor grid. In all but very cold temperatures the heater should be easy to feel.

f) Blow remaining water off the sensor, allowing the lid mechanism to return to the wet-side bucket and the motor box to shut off.

Other Routine Servicing Suggestion:

a) Periodically clean the sensor grid so as to remove any accumulation of minerals or contamination that could close the circuit and thus present a false "wet" signal. To clean the space between the grid and the plate, cut a strip of cardboard from a time card or a manila folder to a width of about 1.8 inches (4.5 cm); this can be passed between the Teflon washers which fix the separation of the grid and plate, or simply use an old toothbrush and deionized water or alcohol to remove accumulated material.

b) As needed, clean the lid, roof and arm mechanisms to remove any residues (e.g., bird feces, dust, other organic material).

- NOTES -

Appendix B

INSTRUCTION BOOK FOR UNIVERSAL RECORDING RAIN GAUGE

BELFORT INSTRUMENT COMPANY

INSTRUCTION MANUAL
CATALOG NUMBER 5-780 SERIES
UNIVERSAL RECORDING RAIN GAGE

727 SOUTH WOLFE STREET
BALTIMORE MARYLAND 21231-3513
301-342-2626
TELEX-87528 BELFORT BAL

MARCH 15 , 1986 INSTRUCTION MANUAL NUMBER 8777

BELFORT INSTRUMENT COMPANY
FACTORY AND SALES • 727 S. Wolfe Street • Baltimore, Maryland 21231 • Telephone (301) 342-2626 • Telex 87528 (BELFORT BAL)
SALES AND SERVICE • 2620 Concord Avenue #102 • Alhambra, California 91803 • Telephone (818) 282-4893 • Telex 6831262 (BLFCA)

Belfort Warranty Statement

Belfort Instrument Company warrants that its manufactured equipment shall conform to applicable specifications, as stated by Belfort Instrument Company, at the time of shipment from a Belfort Instrument Company facility, and if used and maintained in normal and proper manner in accordance with Belfort Instrument Company's instructions (including without exception, Belfort Instrument Company's recommendations regarding operating and maintenance procedures) shall remain free from defects in workmanship and material for a period ending one (1) year (90 days for potentiometers, semiconductor devices, batteries, fuses, relays, lamps and tubes) from the date of original shipment from a Belfort Instrument Company facility.

Belfort Instrument Company's obligation under this Warranty shall be limited to repair at either its main plant (727 S. Wolfe Street, Baltimore, MD 21231) or its Western Regional facility (2620 Concord Avenue, #102, Alhambra, CA 91803) or, at its option, replacement of the defective Product. In no event shall Belfort Instrument Company be responsible for incidental or consequential damages, whether or not foreseeable or whether or not Belfort Instrument Company has knowledge of the possibility of such damages. This Warranty shall not apply to Products which have been altered, operated or maintained in a manner not approved by Belfort Instrument Company, or which have been damaged through negligence, accident, or misuse.

In order for any claim under this Warranty to be valid, such claim must be made in writing to either facility mentioned above, Attention: Customer Services, within a reasonable period of time, not to exceed 30 days after the defect is discovered, and all such claims are subject to substantiation by Belfort Instrument Company's Inspection Department. Belfort Instrument Company may require the return of the alleged defective Product or part to establish a claim under this Warranty. Transportation charges to the factory shall be prepaid by the customer; transportation for the return of the repaired equipment to the customer shall be paid by Belfort Instrument Company when legitimate claim to Warranty has been established; else, Belfort Instrument Company will prepay shipment and bill the customer. All shipments shall be accomplished best way surface freight. Should alternative shipment be required, Belfort Instrument Company shall be responsible only for that portion of cost as would be applicable to best way surface freight. Belfort Instrument Company will not allow any credit for repairs or alterations to its Products, and Belfort Instrument Company shall in no event assume any responsibility for repairs or alterations made other than by Belfort Instrument Company. Any Products repaired or replaced under this Warranty will be warranted for the balance of the warranty or warranted operating time remaining with respect to the original purchased Product.

BELFORT INSTRUMENT COMPANY HEREBY EXCLUDES ALL WARRANTIES OF MERCHANTABILITY AND FITNESS FOR ANY PURPOSE, AND ALL OTHER WARRANTIES, EXPRESS OR IMPLIED, ON THE PRODUCTS, OTHER THAN THE WARRANTY STATED ABOVE. Representations or warranties that are inconsistent with this Warranty made by any person, including employees or representatives of Belfort Instrument Company, shall not be binding on Belfort Instrument Company. The period of limitations for any cause of action arising out of, based upon or relating to this Warranty is hereby reduced to and shall be a period of one year after such cause of action occurs.

TABLE OF CONTENTS

SECTION	DESCRIPTION	PAGE
1.	INTRODUCTION	1
2.	DESCRIPTION	
	2.1 General	1
	2.2 Weighing Mechanism	1
	2.3 Single-traverse Gages	1
	2.4 Dual-traverse Gages	1
	2.5 Zero Adjustments	1
	2.6 Technical Characteristics	3
	2.7 Government Specifications	3
3.	INSTALLATION	
	3.1 Unpacking	3
	3.2 Gage Exposure	3
	3.3 Mounting	3
	3.4 Installation	4
4.	OPERATION	
	4.1 Chart Changing	6
	4.2 Chart Sets	7
	4.3 Gage Winterizing	7
5.	MAINTNENACE	7
6.	CALIBRATION	
	6.1 General	10
	6.2 Calibration Equipment	10
	6.3 Pre-calibration	10
	6.4 Single-traverse Calibration	10
	6.5 Dual-traverse Calibration	11
7.	REPLACEMENT PARTS LIST	13

LIST OF ILLUSTRATIONS

FIG. NO.	TITLE	PAGE
1	Outline - Universal Recording Rain Gage	2
2	Removal of Dashpot	5
3	Linearity Setting, Dual-traverse Gages	14
4	Universal Recording Rain Gage	16
5	Rain Gage Mechanism, Front View	18
6	Rain Gage Mechanism, Single-spring	22
7	Rain Gage Mechanism, Dual-spring	26

LIST OF TABLES

1	Gage Catch Freezing Temperatures	8
2	Available Rain Gage Charts	9

1. Introduction

This instruction book contains all the necessary information for the installation, operation, maintenance and calibration of the Belfort Instrument Company Cat. No. 5-780 Series Universal Recording Rain Gage.

2. Description

2.1 General. The Cat. No. 5-780 Series Universal Recording Rain Gages are weighing-type gages in which a weighing mechanism converts the weight of the rainfall caught by a circular, horizontal opening at the top of the gage into the curvillinear movement of a recording pen which makes an inked trace on a rectangular paper chart. The chart, graduated in inches, or millimeters of rainfall, is wrapped around a vertical cylinder which is rotated either by an 8-day spring-powered, or a long-term battery-powered, chart drive. In some gages of this series the record capacity of the gage is reached in a single traverse of the pen across the chart; in others it is reached after a double traverse of the pen.

2.2 Weighing Mechanism. The rainfall falling through the 8"-diameter collector (fig 4, #1) is caught in a bucket (5) resting on a platform (6) mounted to the vertical link of a 4-bar linkage. The vertical link, or movement bracket (Fig. 5, #15), is supported from the mechanism frame by a precision extension-spring assembly (Fig 5, #9). The upper horizontal link, or top lever (Fig 5, #6), of the linkage is provided with an adjustable extension (3) by which the deflection of the spring is multiplied and modified to fit the requirements of the recording mechanism. A second horizontal link, or lower lever (ns), provides the additional constraint needed to keep the movement bracket vertical throughout its deflection. The top and lower levers turn in the mechanism frame; the movement bracket turns in the top and lower levers. A limit screw (Fig 6, #14) at the top rear of the mechanism prevents the recording pen from striking the chart cylinder flange when the catch bucket is removed from the gage by limiting the upward movement of the top lever. A second limit screw (Fig 4, #11), attached to the movement bracket, prevents the pen from falling off the top of the chart cylinder in single-traverse gages and from striking the chart cylinder flange in dual traverse gages. The bottom of the movement bracket is linked to the piston of a damping device, a dashpot (Fig 6, #2), to reduce pen arm vibrations due to wind gusts.

2.3 Single-Traverse Gages. In single-traverse gages, only one link (Fig 6, #8) and lever (5) is used to transmit the motion of the top lever to the pen arm shaft (33). For this application, the lever extension (11) is mounted to the rear finger of the top lever.

2.4 Dual-Traverse Gages. In dual-traverse gages, a second lever extension, and adjustable slotted link (Fig 6, #7), and a counterweighted lever (3) are added between the top lever and the pen arm shaft. Additionally, a non-adjustable slotted link (8) and lever (5) replace the link and lever used in the single-traverse gages. In the first, upward traverse of the pen arm (27), the counterweight keeps the shorter rear lever (5) in contact with the top of the slot in the non-adjustable link (8) as the top lever extension, link, and pen arm move upwards, When the pen (28) reaches the top of the chart, the counterweighted lever (3) comes into contact with the bottom of the slot in the adjustable link. Continued upward movement of the lever extension and link moves the pen arm downward through its second traverse. The slot in the nonadjustable link permits the lever and the pen arm to move downward even through the link is moving upwards.

2.5 Zero Adjustments. All gages are equipped with both coarse (Fig.6, #15) and fine (20) zero adjustments with which the pen may be set on the zero-line of the chart. This setting must always be made with an empty catch bucket, or bucket-equivalent calibration weight, on the weighing mechanism. In making continued zero ad-

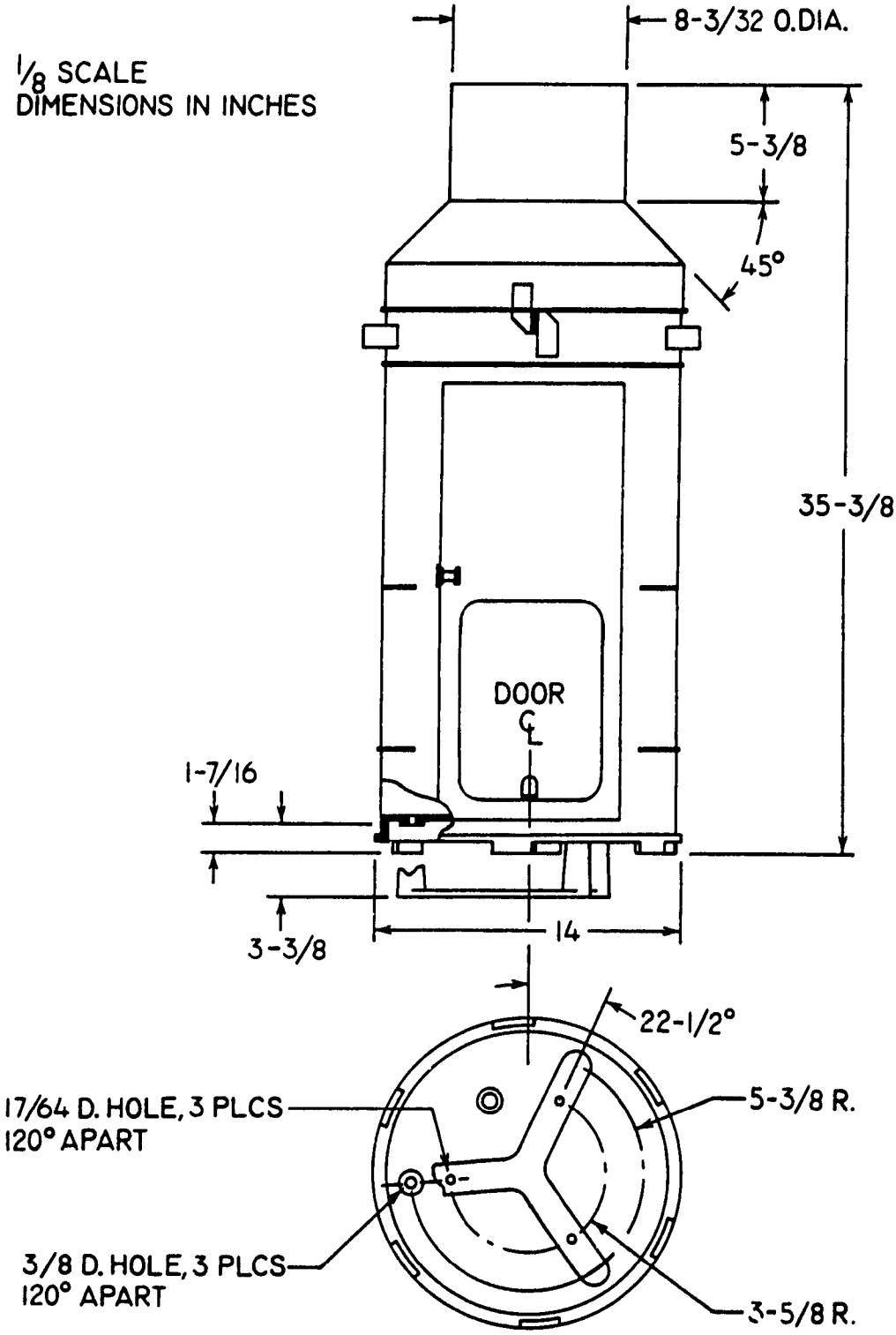

Figure 1. Outline - Universal Recording Rain Gage

justments, care should be taken to make use of both adjustments so as to keep the bar of the fine adjustment (42) reasonably parallel to the top of the mechanism frame.

2.6 Technical Characteristics.

Accuracy: 1/3 of 1% F.S. for single-traverse gages, (-40° to +125°F.)

1/2 of 1% F.S. for dual-traverse gages, (-40° to +120°F.)

Sensitivity: 0.01" of precipitation.

Collector Diameter: 8.00"

Chart Record: 6" wide x 11-1/2" long

Chart Periods: 6,12,24,48,96,168, and 192 hours per revolution for 8-day, spring-powered chart drives; any of the preceding periods and 861 hours/rev. for 3-volt battery-powered chart drives.

Chart Timing Accuracy: within 14 minutes/week

Finish: aluminum lacquer

Gage Weight: 25 lbs., empty

2.7 Government Specifications. The Cat. No. 5-780 Series Universal Recording Rain Gages are built to National Weather Service Specifications #450.2201 and 450.2203.

Ranges:

Range, 0-	6" ST	4.8" DT	12"DT	300mmDT	20"DT	500mmDT
Cat. No. 5-780	-6	04.8	No Dash No.	-300MM	-20	-500MM

3. Installation

3.1 Unpacking. Unpack the gage carefully. The chart set supplied with the gage is to be found inside the top insert of the carton. The chart cylinder has been removed from the chart drive and stowed in the catch bucket along with the recording ink and damping fluid. To get at these items, cut the tie through the collector padlock staples, rotate the collector sufficiently to disengage the bayonet lock, and lift the collector up and off of the gage housing.

3.2 Gage Exposure. The exposure of a rain gage is of primary importance to the accuracy of precipitation measurements. An ideal exposure for the gage would eliminate all air turbulence near the gage tending to carry precipitation away from the gage. Loss of precipitation in this manner increases with increase in wind speed. Selection of the rain gage site should be based on the following considerations:

A. The extensive presence of objects which individually or in small groups would constitute obstructions may prove beneficial in reducing prevailing wind speed, and subsequent air turbulence, in the vicinity of the gage. As a general rule for those areas where the height of the objects and their distance from the gage are generally uniform, their height above the gage should not exceed twice their distance from the gage.

B. In open areas, serious air turbulence may be created near individual or small isolated groups of objects. As a general rule, the height of such objects above the gage should not exceed half their distance from the gage.

C. Wind shields of the Alter type may be employed to minimize losses in the precipitation catch.

D. In areas where heavy snowfall occurs, the gage should be mounted on a support (tower) at a height well above the level of average snowfall accumulation.

E. Good exposures are not always permanent. The growth of vegetation, trees, and shrubbery, as well as man-made alterations about the site, may change an excellent exposure into a poor one in a relatively short time.

3.3 Mounting. A sturdy wooden, or concrete, foundation should be prepared for mounting the gage at the

required height above ground level. It is essential that the edge of the collector opening be horizontal as determined by a carpenter's level. The gage design is such that this condition will be satisfied if provision is made to insure that the surface to which the gage is mounted is horizontal, whether it be the foundation or the accessory support base (Fig 4, #4). The support base can be bolted to either type of foundation or imbedded in the concrete foundation.

3.4 Installation. The rain gage is installed on its foundation as follows:

A. Remove the collector (Fig 4, #1) by rotating it sufficiently clockwise to disengage the bayonet lock and pulling it up and off of the gage housing. Use extreme care not to distort the area of the collector opening.

B. Remove the catch bucket. The chart cylinder, recording ink, and damping fluid have been packed and shipped in the bucket.

C. Remove the screw (Fig 6, #19), washer (18), and bucket platform (17).

D. Remove five screws and washers (Fig. 4, #3), and remove gage housing (2) from the base (9). Note the location of the sliding access door relative to the chart drive and pen arm.

E. Three 3/8"-diameter holes, 120° apart on a 10-3/4"-diameter circle, are provided in the mechanism base for mounting it to the support base or foundation. Exercise extreme care in mounting the mechanism base: the machined gage housing shoulder must be horizontal, and the bolting-up must not distort the base. Hardware for mounting the mechanism base is not supplied with the gage, however, hardware is supplied with the support base for mounting it to the mechanism base. Additionally, hardware is supplied with the support base for mounting it to the foundation, or to assist in imbedding it in the concrete foundation.

F. Remove the shipping tie holding the pen arm to the pen shifter (Fig 5, #13).

G. Loosen the mechanism locking screw (Fig 6, #21), and nut, and back out the screw until the top lever is stopped by limit screw (14). Retract the locking screw a turn or two farther; lock in position with its nut. Remove the stop sleeve (Fig. 4, #8) from about the movement bracket limit screw (7). Do not discard the sleeve; it will be needed for reshipment of the gage. Do not disturb the setting of the limit screws (Section 2.2); their positions are a part of the gage's calibration.

H. Remove the wrapping from the chart drive mechanism, and unscrew the mechanism from the base.

I. The dashpot (Fig. 2, #3) is mounted to the mechanism base with two identical thumbscrews (1,2). Remove thumbscrew (2), loosen thumbscrew (1), push up the dashpot cover (4), and pull dashpot out from between the mechanism frame as shown in Fig. 2 (a) and (b).

J. From the bottle of damping fluid shipped in the catch bucket, fill the dashpot cylinder to within an 1/8" of its rim, and replace the dashpot between the mechanism frame. Empty the catch bucket, setting aside the recording ink and discarding all packing materials, and set the bucket on its platform. If the gage is equipped with an overflow attachment, the overflow tube is placed in the round hole in the platform centering the tube over the overflow funnel mounted in the mechanism base.

K. Replace the chart drive mechanism. The mounting stud of the chart drive mechansim has been adjusted so that the winding key of the spring-powered chart drive and the movement viewing part of the battery-powered chart drive are accessible from the sliding access door of the gage housing. Make certain that the stud flange is firmly seated against its mounting surface, but do not overtighten the mechanism and disturb the stud setting.

L. Remove thumbnut from chart drive mechanism spindle. Mount chart cylinder (with chart clip), supplied in the catch bucket, on the spindle, making certain that the mechanism

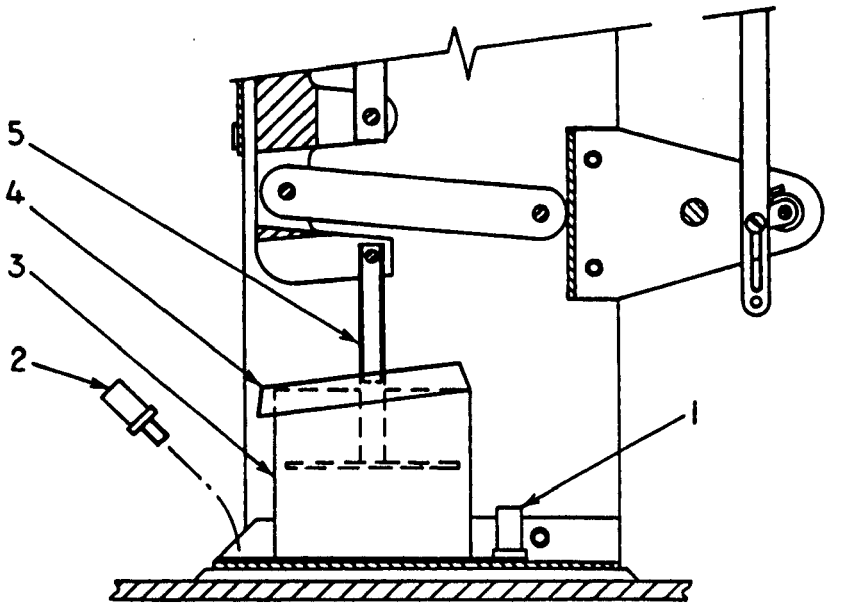

(a)

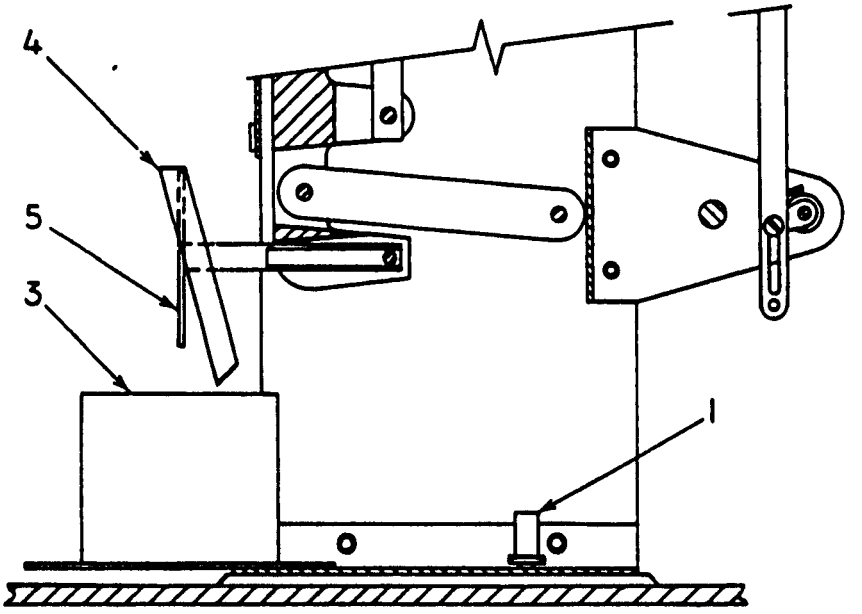

(b)

Figure 2. Removal of Dashpot

Figure and Index Number	Manufacturer's Part Number	Description
2-1	7207	Screw, Mounting - Dashpot
-2	7207	Screw, Mounting - Dashpot
-3	8621	Dashpot Cylinder Assembly
-4	928	Cap, Dashpot
-5	8623	Piston, Dashpot

pinion and the cylinder gear are meshed, and replace the thumbnut.

M. Replace the gage housing, positioning it on the mechanism base so that the chart drive and pen arm are accessible from the sliding access door. If the gage is equipped with overflow protection, make certain that the overflow-clearance hole in the dust shield, which rests on an interior bead of the gage housing, is centered over the overflow funnel in the base. Fasten the housing in place with five screws and washers (Fig. 4, #3).

N. Replace the bucket platform (Fig 6, #17) on the movement bracket (16), and fasten it in place with the washer (18) and screw (19). If the gage is equipped with an overflow attachment, make certain the round hole in the bucket platform is over the overflow funnel (Fig. 7, #6) mounted in the mechanism base.

O. Replace the collector on the gage housing, reversing the procedure of par. A of this section. The collector can be padlocked to the gage housing through the staples provided on each.

P. The gage housing and its sliding access door are equipped with a sliding-bolt and staple so that the door can be padlocked shut.

Q. Using the large zero and fine adjustment screws, (Fig 6, #20,15), re-zero the pen.

R. The gage is now ready to be put into operation.

4. Operation

4.1 Chart Changing. The chart drive and pen arm are accessible from the sliding access door in the gage housing. The following procedure should be followed when changing charts:

A. Open the sliding access door, and make a short vertical mark (time-check) on the chart by lightly touching the bucket platform. If the chart drive has stopped, turn the chart cylinder slightly in both directions to mark the existing pen position. If the pen is not making a trace, indicate the pen position by a dot enclosed in a circle.

B. Lift the pen off of the chart by moving the pen shifter (Fig. 5, #13) outward.

C. Remove the collector, and empty the catch bucket except during the winter when the bucket may be changed with an anti-freeze solution (par. 4. 3,B) or when oil has been added to the catch to retard evaporation.

D. Remove the chart cylinder thumbnut, and remove the cylinder by lifting it up and off of its spindle. Take care not to smear the pen trace. Release the chart clip holding the chart, and remove the chart. Do not store the chart until the pen trace has dried.

E. Wind the chart drive if it is spring-powered. The battery-powered chart drive will need no preparation for a new recording period unless the time has arrived for a battery change. Refer to the chart drive instructions for details of the chart operation.

F. Clean the pen if necessary: refer to instruction book #12049, included with these instructions, for proper care of the recording pen.

G. Mount new chart to the cylinder as follows:

1. If chart is the double-tab type, fold righthand tab under back of chart, and wrap chart snugly around cylinder so that a) time is read from left to right, b) corresponding rainfall graduations meet, c) the bottom edge of the chart is against the cylinder flange, d) the folded end of the chart overlaps the opposite end, and e) the crease in the fold is at the right-hand edge of both the notch in the upper edge of the cylinder and the slot in the cylinder flange.

2. Clamp the chart to the cylinder by placing the clip inside the fold at the overlapping end of the chart, placing the straight end of the clip in the slot in the cylinder, and seating the formed end of the clip in the notch in the upper edge of the cylinder.

3. If the chart is the single-edge type, wrap it snugly around the cylinder so that a) time is read left to right, b) corresponding rainfall

graduations meet, c) the bottom edge of the chart is against the cylinder flange, d) the untabbed end is at the right-hand edge of both the notch in the upper edge of the cylinder and the slot in the cylinder flange.

4. Clamp the chart to the cylinder by placing the clip over the untabbed end of the chart, inserting the straight end of the clip into the slot in the cylinder flange, and seating the formed end of the clip in the notch in the upper edge of the cylinder.

H. Replace the chart cylinder and thumbnut on the chart drive mechanism spindle making certain that the mechanism pinion and cylinder gear mesh.

I. Refill the pen, and push in pen shifter to return the pen almost to the chart surface. If the catch bucket is empty, and the pen does not indicate zero within the gage tolerance, set the pen to the zero line with the coarse (Fig. 6, #15) and fine (20) adjustment screws. Set chart to time by first turning the cylinder clockwise past the correct time and then returning it counterclockwise to the correct time. Be sure the time is correctly set with respect to a.m. or p.m.

J. Push the pen shifter all the way in to put the pen on the chart. Lightly touch the bucket platform to make a time check on the chart. The gage is now ready for a new recording period. Close and padlock the access door.

4.2 Chart Sets. Charts available for use with the 5-780 Series Rain Gages are listed in Table 2. Chart sets of the 6 through 192-hour period charts contain 100 charts; sets of the 861-hour charts contain 25 charts.

4.3 Gage Winterizing. During the winter months the gage should be protected against possible damage from snow, ice pellets, and freezing temperatures by taking the following steps:

A. Remove the funnel fixed to the bottom of the collector (Fig. 4, #1). Rotate the funnel until its bead clears the pens in the collector tube, and lift it off.

B. Empty the catch bucket, replace it in the gage, and add to it an anti-freeze solution composed of two pints of ethylene glycol and three pints of methyl alcohol (methanol). Add six ounces of a 10W motor oil to the solution to retard evaporation.

C. Do not make any adjustment to the gage after adding the anti-freeze and oil to the bucket: the gage will indicate a rainfall level of approximately 2-3/4".

D. The anti-freeze solution and oil are self-mixing with respect to the snow and ice added to it. Table 1 gives the approximate freezing temperatures of the anti-freeze solution when diluted by additional water-content to the gage levels indicated. The catch bucket should be emptied and recharged with fresh anti-freeze and oil whenever the gage level and the prevailing temperatures indicate that freezing of catch is probable.

5. Maintenance

The frequency with which the gage is serviced will depend on the environment of the gage: as frequent as once every three months in dusty climates; as infrequent as once a year in mild climates. The appearance of the gage at regular operational visits will make apparent the need for servicing. The following procedures and recommendations should be made part of the gage service schedule:

A. Clean all moving parts with a soft brush moistened with varsol. Solvents that attack paint must never be used for this purpose.

B. Except as required in the chart. drive mechanism, never oil any part of the gage: corrosion-resistant materials have been used throughout the gage's construction, and oil will, in time, become gummy and cause sluggishness in the gage's operation.

C. Examine the weighing mechanism linkage for evidence of excessive friction. If corrections for this fault require significant disassembly or part replacement, recalibrate as described in Section VI.

D. Clean the bucket thoroughly. Sufficient foreign matter accumulating in or on the bucket, adding to its weight, can cause depletion of available zero-adjustment.

E. Inspect the dash pot: add silicone fluid, if necessary, to cover the piston when it is in its uppermost position (gage zero.)

F. Clean the pen: see instruction book #12049.

G. Inspect the chart drive, and if necessary, service it. See instruction book #12049 for details of chart drive maintenance.

H. If recalibration of the gage is necessary, it may be returned to the factory for this purpose. However, for the do-it-yourself gage owner, complete calibration instructions are given in Section 6. Additionally, calibration-weight sets of various capacities are listed in Section 7.

TABLE 1

GAGE CATCH FREEZING TEMPERATURE
(Glycol-Methanol-Water Mixture)

GAGE LEVEL, INCHES	6	7	8	10	12
FREEZING TEMPERATURE, °C	-40	-30	-23	-13	-4

TABLE 2

AVAILABLE RAIN GAGE CHARTS

CHART NUMBER	RANGE	CHART PERIOD HRS/REV	GRID SIZE		LEAST DIVISION	
			WIDTH	LENGTH	RANGE	TIME
5-4003-B	0 to 6", ST	24	6"	11.52"	.05"	20 min
5-4006-MM	0 to 150mm, ST	192	6"	11.30"	1 mm	2 hrs.
5-4041-B	0 to 12", DT	6	6"	11.52"	.05"	5 min.
5-4042-B	0 to 12", DT	12	6"	11.52"	.05"	10 min
5-4044-B	0 to 12", DT	48	6"	11.52"	.05"	15 min
5-4045-B	0 to 12", DT	96	6"	11.52"	.05"	1 hr
5-4046-B	0 to 12", DT	192	6"	11.52"	.05"	2 hrs.
5-4046-MM	0 to 300mm, DT	192	6"	11.30"	1 mm	2 hrs.
5-4047-B	0 to 12", DT	24	6"	11.52"	.05"	15 min
5-4047-MM	0 to 300mm, DT	24	6"	11.30"	1 mm	15 min
5-4048-B	0 to 4.8", DT	6	6"	11.52"	.02"	5 min.
5-4049-B	0 to 4.8", DT	24	6"	11.52"	.02"	15 min
5-4050-B	0 to 4.8", DT	192	6"	11.52"	.02"	2 hrs.
5-4068	0 to 20", DT	168	6"	11.52"	.10"	2 hrs.
15620	0 to 300mm, DT	861 (1)	6"	11.52"	1 mm	6 hrs.
15668	0 to 12", DT	861 (1)	6"	11.52"	.05"	6 hrs.
15669	0 to 20", DT	861 (1)	6"	11.52"	.10"	6 hrs.

6. CALIBRATION PROCEEDURES

6.1 General

Calibration of the gages described herein is based on the assumption that 822.7 grams is the weight of a volume of water 1" high with an area equal to the area of the 8" diameter collector opening of the gage. It also assumes that the weight of the bucket used in the 12" (300mm) gage is one kilogram and 2.1 kg for the 20" (500mm) gages, and that the gage zero-adjustment range is sufficient to accomodate normal variations in bucket weight.

6.2 Equipment

Calibration of the gages requires one of the calibration weight sets as listed in Section 7, Parts List, and a small machinist's level (approximately 2" long). Each set consists of an equivalent-bucket weight, a number of calibration weights, and a linearity setting tool (Figure 3, #4). Inch weights are finished in aluminum lacquer; mm weights in gold.

6.3 Pre-Calibration

Calibration of all gage mechanisms requires the mechanism base to be level and the following preliminary adjustments to be made:

A. Loosen the Limit Screws (Figure 4, #7; Figure 6, #14 and 21) sufficiently enough so that endplay is not restricted on the Back Shaft (22), the Movement Bracket (16), the Top Lever (19), the Extension Levers (12), the Lower Casting (ns), and the Pen Arm Shaft (38), within the range of the calibration.

B. Center the screws and nuts (12) in the slot lengths of the Lever Extension (11).

6.4 Single Traverse Calibration

A. Center the equivalent-bucket weight in the bucket platform, and place a number of calibration weights equal to one-half of the gage capacity on the bucket weight.

B. Place the machinist's level across the two pads in front finger of the Top Lever (23), and rotate the linkage with the zero-adjustment thumbscrews (15 and 20) so as to make the pads level. In making continued zero-adjustments, care should be taken to make use of botl the Fine and Large Adjustment Screws so as to keep the Fine-Adjustment setting bar reasonably parallel to the top of the mechanism frame.

C. Loosen the Set Screw (6) fastening the Lever (5) to the Pen Arm Shaft (33), and rotate the Pen Arm Shaft to put the recording pen in the center of the chart; retighten the set screw.

D. Remove the calibration weights from the bucket weight. Set the pen to the zero-line of the chart; rotate the thumbscrews (15 and 20) clockwise to lower the pen and counter-clockwise to raise it.

E. Place all calibration weights on the bucket weight, one at a time. Check the pen position after the addition of each weight to determine if the pen position is within the accuracy tolerance of Section 2.6.

F. If the pen movement is linear but the pen positions are not sufficiently accurate, it will be necessary to change the Lever Extension (11) length. Moving the link pivot (10) away from the top lever will raise the pen position. Remove the calibration weights, loosen the nuts (12) fastening the extension sufficiently to move the extension with the screw (13), and make the adjustment with the screw - one turn of the screw will move the pen about one chart division; retighten the nuts. If an outward adjustment is required, back out the screw sufficiently to allow an over-adjustment of the extension, and return to the required adjustment by use of the screw. Rezero the pen, and repeat the procedure of Paragraph E. Repeat the procedures of Paragraph E and this paragraph until the pen positions are within tolerance.

G. If the pen movement is unlinear as well as inaccurate, it will also be necessary to rotate the pen shaft (33) relative to the Lever (5). Viewed from the pen arm side of the gage, rotation of the pen arm shaft in a counter-clockwise sense relative to the lever will increase the pen movement per calibration weight in the upper-half of the chart;

Figure and Index Number	Manufacturer's Part Number	Description
6-14	8471	Screw, Adjustment (limit)
	-----	10-32 Hex Nut, ST, ST
-15	952	Thumb Nut (Coarse Zero Adjust)
-16	8713	Bracket Movement
	985	Shaft, Plain
	-----	2-56 x 5/6" Fil. Hd. Screw, ST, ST
	8586	Shaft (Connector) Dashpot Piston
	3279	Retainer Clip, Shaft
-17	953	Platform Bucket
	16471	Platform Bucket with overflow option
-18	908	Washer, Bucket Platform
-19	-----	½-20 x 7/8" Flat Hd. Screw, ST, ST
-20	8319	Zero Setting Assembly (Fine)
	8317-1	Setting Bar Assembly
	8306	Screw, Setting
	16072	Zero Setting Assembly (for 20" and 500MM Gages)
	16072-1	Setting Bar Assembly (for 20" and 500MM Gages)
	16472	Screw, Setting (for 20" and 500MM Gages)
-21	8471	Screw, Adjustment (Limit)
	-----	10-32 Hex Nut, ST, ST
-22	-----	Mechanism Frame
	8597	Front Sideplate Assembly
	8292	Plate, Top
	10504	Plate, Top (for 20" and 500MM Gages)
	993	Pen Shaft Bracket Assembly
	8717	Angle Bracket Base
	7204	Sideplate, Rear
	8741	Bracket, Stop (Limit)
	-----	6-32 x 3/16" Bd. Hd. Screw, ST, ST
	-----	8-32 x 5/16" Bd. Hd. Screw, ST, ST
-23	8722	Lever, Top
	934	Shaft (Long), Lever
	8886	Washer, Flat
-24	8586	Shaft, Dash Pot Pivot (Spring Link)
	3279	Retainer Clip, Shaft
-25	16252	Bracket, Zero Adjust
	16250	Stud, Pen Arm

to the proper reading, (½ turn is approximately one division.)

3. Once adjusted to the proper reading, retighten the nuts (12).
4. Remove all the weights.
5. Using the Large Zero Adjust Knob (15), adjust the pen (28) to zero if necessary.
6. One at a time, place the weights back into the bucket, taking note of the readings.
7. Continue to repeat this entire process, steps 1 through 6 until the pen reads correctly.

NOTE: If weights 1 thru 4 read correctly, it can expected that both weights 5 and 6 will read slightly higher than the correct mark. This is attributed to the springs and should <u>not</u> be adjusted for.

O. If the pen is reading slow, i.e. lower than the expected increments, adjust the gage as follows:
   1. Using the First Traverse Lever Link (8), loosen the two nuts (12) on the top of the link.
   2. Turn the Adjusting Screw (13) counter-clockwise until the pen adjusts to the proper reading.
   3. Once adjusted to the proper reading, retighten the nuts (12).
   4. Remove all the weights.
   5. Using the Large Zero Adjustment Knob (15), adjust the pen (28) to zero, if necessary.
   6. One at a time, place the weights back onto the bucket weight, noting the reading for each weight.
   7. Continue to repeat the entire process, steps 1 thru 6, until the pen reads correctly.

   NOTE: If weights 1 thru 4 read correctly, it can be expected that both weights 5 and 6 will read slightly higher than expected. This can be attributed to the springs and should <u>not</u> be adjusted for.

P. When the pen (28) reads correctly with all the weights on the bucket weight, this signifies that the First Traverse is zeroed. (Zero to six inches for a 12" DT Gage.)

Q. Next, proceed to the Second Traverse Lever Link. Turn the screw (34) down until the pen (28) is exactly at the top of the chart and will go no higher than the top measurement line, 6 inches.

R. Place the second set of weights onto the bucket weight, noting the readings as the pen descends down the chart.

S. If the pen is reading fast or slow, the same procedures are used on the Second Traverse as on the First.
   1. On the Second Traverse Lever Link loosen the two nuts on the top of the link.
   2. Turn the Adjusting Screw (34) clockwise to slow the reading down, or counter-clockwise to speed it up, until the pen adjusts to the proper reading.
   3. Once adjusted to the proper reading, retighten the nuts.
   4. Remove the second set of weights.
   5. Using the Large Zero Adjustment Knob (15), adjust the pen to zero if necessary.
   6. One at a time, place the weights back onto the bucket weight, again marking down the readings.
   7. Continue to repeat the entire process, steps 1 through 6 until the pen reads correctly.

T. Once the pen is zeroed, place some extra weight (anything) onto the bucket weight. Using the Back Screw (ns) directly behind the Movement Bracket (16), turn it clockwise to bring the pen up, stopping immediately before the pen reaches the bottom of the flange (30). Tighten the nut on the back screw once this has been done.

U. Remove all weights and the bucket weight from the gage.

V. Turn the Front Screw (14) clockwise bringing the pen to rest slightly above the flange (30). Tighten the nut on the screw.

W. Replace the bucket weight on the gage.

X. Using either Zero Adjustment Knob (15 or 20), adjust the pen to zero.

7. Replacement Parts List

The Parts Lists given in this section are applicable to the Belfort Model 5-780 Series Universal Recording Rain Gage, manufactured by Belfort Instrument Company, 727 South Wolfe Street, Baltimore, Maryland 21231. Parts may be ordered from the Belfort Sales Center listed at the end of this manual. Prices will be furnished upon request.

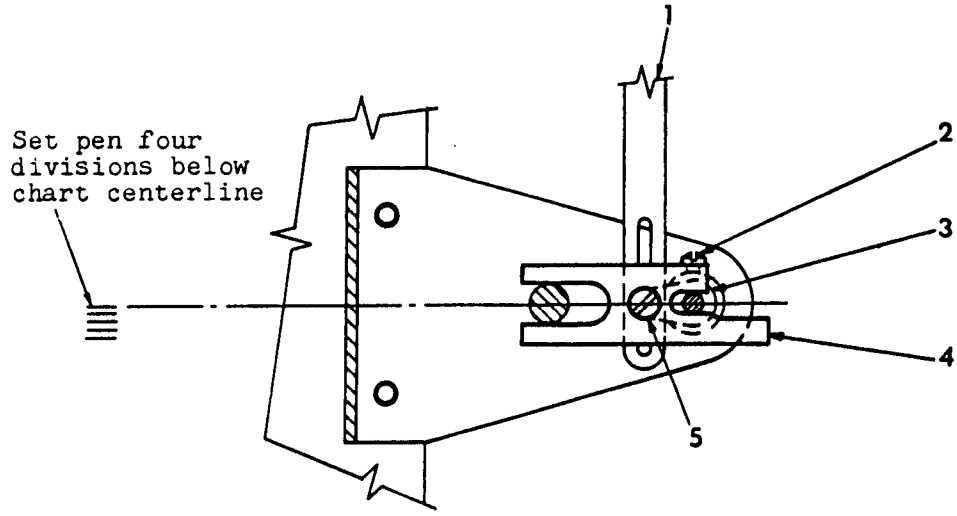

(a)

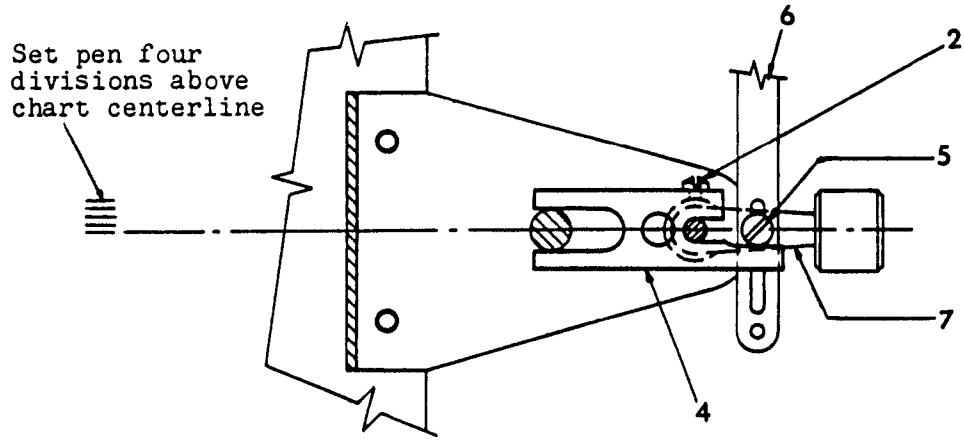

(b)

Figure 3. Linearity Setting, Dual Traverse Gages

Figure and Index Number	Manufacturer's Part Number	Description
3-1	16246-1	Link, Non-adjustable
	16246-4	Link (for 6" ST Gage)
-2	-----	3-56 x 3/16" Fil HD Screw, ST, ST
-3	917	Lever, Short
	10503	Lever, Short (for 20" and 500MM Gages)
-4	16453	Tool, Linearity-Setting (for DT Gages)
-5	991	Screw, Shoulder
-6	16246-2	Link, Adjustable
	-----	2-64 x 5/8" Oval HD Screw, ST, ST
-7	914	Lever, Long
	10502	Lever, Long (for 20" and 500MM Gages)
	909	Counterweight

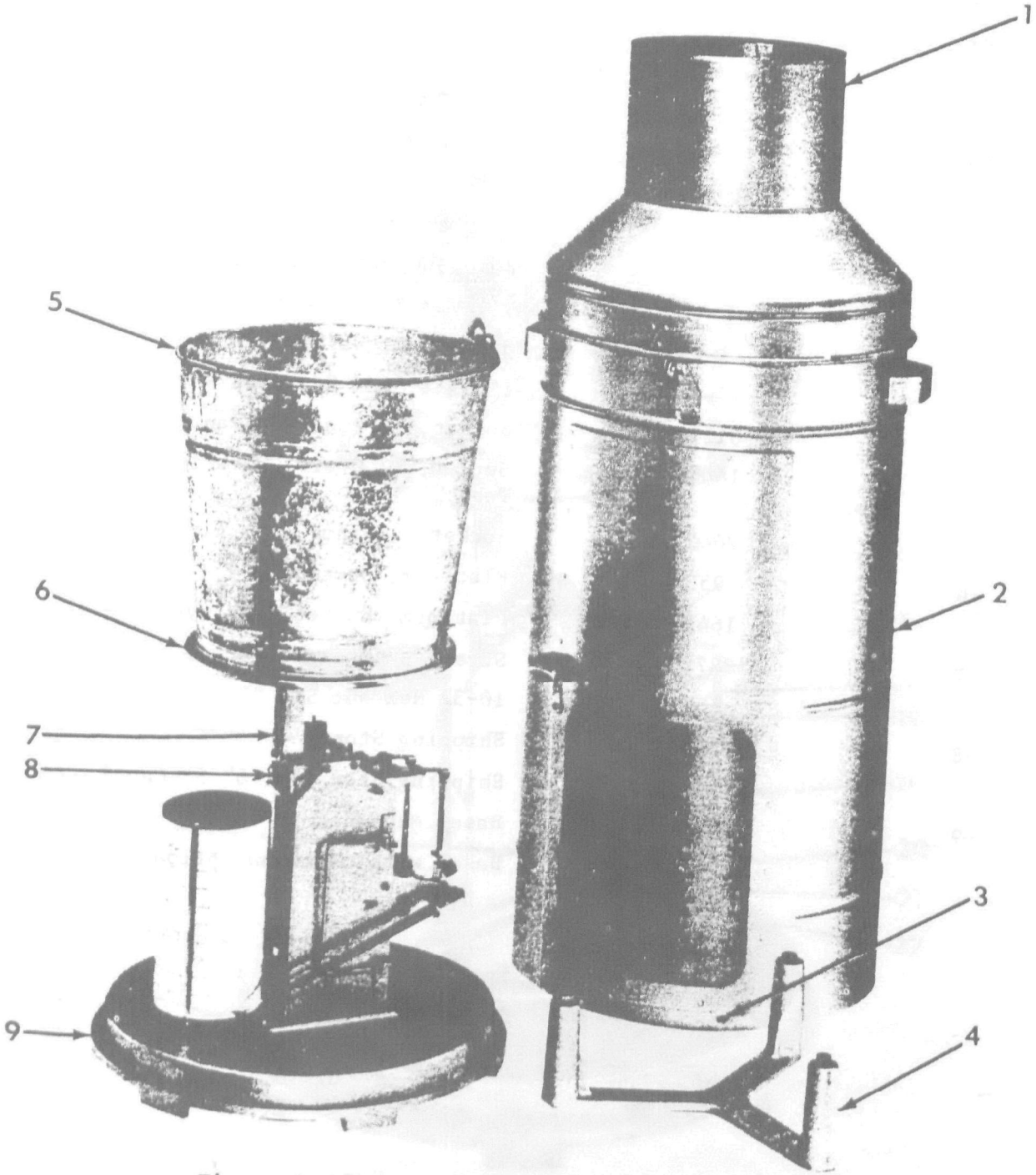

Figure 4. Universal Recording Rain Gage

Figure and Index Number	Manufacturer's Part Number	Description
4-1	957	Collector Assembly
ns	8711	Funnel, Collector
-2	8648	Case Assembly (Gage Housing)
ns	8463	Dust Shield
ns	16472	Dust Shield (with Overflow option)
-3	-----	8-32 x 5/16" Bd. Hd. Screw ST, ST
	-----	#8 Flat Washer, ST, ST
-4	978	Base Support (optional)
	-----	5/15-18 x 3/4" Hex Hd. Capscrew, ST, ST
	-----	5/16" Flat Washer, ST, ST
	-----	#12 x 1" Rd. Hd. Wood Screw, ST, ST
-5	6121	Bucket, 12 Quart Galvanized
	16470	Bucket, 12 Quart Galvanized with Overflow Tube
	7042	Bucket, 20-inch
-6	953	Platform, Bucket
	16471	Platform, Bucket with overflow option
-7	8471	Screw, Adjustment (Stop)
	-----	10-32 Hex Nut ST, ST
-8	8517	Shipping Stop
	16461	Shipping Stop (for 6" ST Gage)
-9	8598	Base, Mechanism
	16473	Base, with overflow option

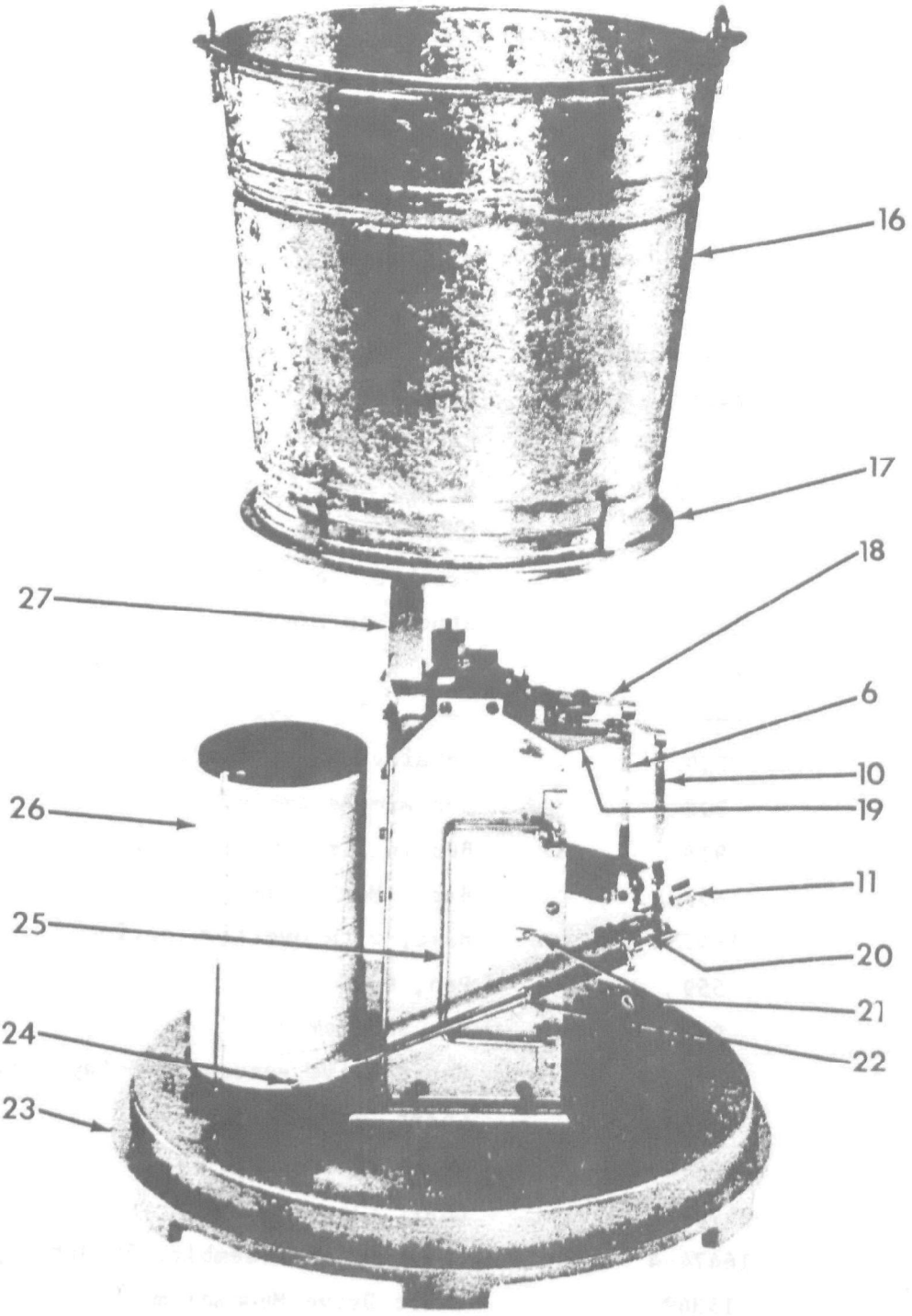

Figure 5. Rain Gage Mechanism, Front View

Figure and Index Number	Manufacturer's Part Number	Description
5-1	6121	Bucket, 12 Quart Galvanized
	16470	Bucket, 12 Quart Galvanized with overflow tube
	7042	Bucket, 20 inch
-2	953	Platform, Bucket
	16471	Platform, Bucket with overflow option
-3	943	Lever Extension
-4	16246-1	Link, Non-adjustable
	16246-4	Link, for 6" ST Gage
-5	16246-2	Link, Adjustable
	-----	2-64 x 5/8" Oval Hd. Screw ST, ST
-6	8722	Lever, Top
	934	Shaft (Long) Lever
	8886	Flat Washer
-7	914	Lever, Long
	10502	Lever, Long (for 20" and 500MM Gages)
	909	Counterweight
-8	16252	Bracket, Zero Adjust
	16250	Stud, Pen Arm
	-----	3-56 x 5/8" Fil. Hd. Screw ST, ST
	-----	2-64 x 3/8" Oval Hd. Screw ST, ST
-9	3279	Retainer Clip, Shaft
-10	992	Pen Arm Assembly
	918	Bearing (screw), Pen Arm
-11	8598	Base, Mechanism
	16473	Base, with overflow option
-12	559	Pen, #3LS
-13	933	Pen Shifter
-14	14253-4	Chart Drive Assembly, 8-Day Spring Powered
	11460	Chart Drive Mechanism
	8572-4	Chart Cylinder
	8570-4	Chart Clip
-14	16474-4	Chart Drive Assembly, 3V Battery-Powered
	15349	Chart Drive Mechanism
	8572-4	Chart Cylinder
	8570-4	Chart Clip
-15	8713	Bracket, Movement
	985	Shaft, Plain

Figure and Index Number	Manufacturer's Part Number	Description
	-----	2-56 x 5/16" Fil. Hd. Screw ST, ST
	8586	Shaft (Connector), Dashpot Piston
	3279	Retainer Clip, Shaft

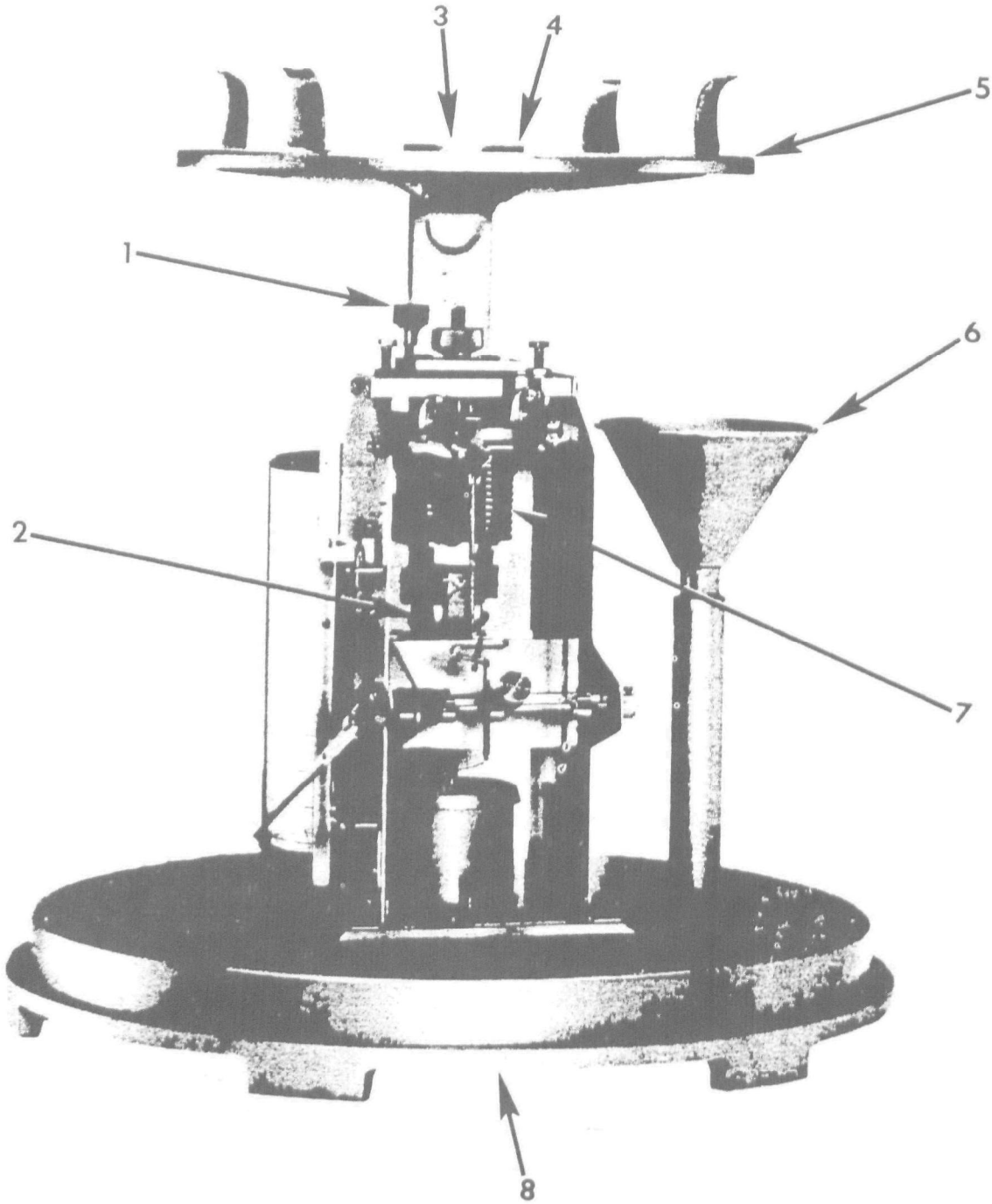

Figure 7. Rain Gage Mechanism, Dual-Spring

Figure and Index Number	Manufacturer's Part Number	Description
6-1	7207	Screw, Mounting - Dashpot
-2	8621	Dashpot Cylinder Assembly
-3	914	Lever, Long
	10502	Lever, Long (for 20" and 500MM Gages)
	909	Counterweight
-4	906	Pivot, Pen Arm Shaft
	-----	3-56 x 3/16" Fil. Hd. Screw, ST, ST
-5	917	Lever, Short
	10503	Lever, Short (for 20" and 500MM Gages)
-6	-----	3-56 x 3/16" Fil. Hd. Screw, ST, ST
-7	16246-2	Link, Adjustable
	-----	2-64 x 5/8" Oval Hd. Screw ST, ST
-8	16246-1	Link, Non-adjustable
	16246-4	Link (for 6" ST Gage)
-9	8197-1	Spring Assembly (for 4.8" Gage)
	6123	Screw, Link
	9885	Link, Spring (for 4.8" Gage)
	8197-2	Spring Assembly (for 6" ST Gage)
	6122	Link, Spring
	8197-5	Spring Assembly
	16339	Spring Assembly, Dual (for 20" and 500MM Gages
	14831-1	
	14831-1	Bar, Spring Mounting (for 20" and 500MM Gages)
	5287	Guide, Spring (for 20" and 500MM Gages)
	-----	2-56 x 5/16 Bd. Hd. Screw, ST, ST (for 20" and 500MM Gages)
	8197-6	Spring Assembly (for 20" and 500MM Gages)
	5243	Nut, Spring Mtg. (for 20" and 500MM Gages)
	5270	Bar (Lower), Spring Mtg. (for 20" and 500MM Gages)
	5246	Pin, Coupling (for 20" and 500MM Gages)
	3279	Retainer Clip (Pin) (for 20" and 500MM Gages)
	5269	Coupling, Spring (for 20" and 500 MM Gages)
-10	1000	Pin, Link
-11	943	Lever Extension
-12	-----	6-32 Hex Nut, ST, ST
	-----	6-32 x 7/16" Bd. Hd. Screw, ST, ST
-13	-----	6-32 x ½ Bd. Hd. Screw, ST, ST

clockwise rotation will decrease it. The magnitude of the adjustment will be in the order of three chart divisions. Loosen the Setscrew (6) fastening the lever to the pen arm shaft, and rotate the pen arm shaft to reposition the pen on the chart. Retighten the setscrew. Remove the calibration weights, re-zero the pen, and repeat the procedures of Paragraph E.

H. Repeat the procedures of Paragraphs E, F, and G until the calibration of the gage meets the accuracy requirements of Section 2.6.

I. Calibration of the gage is now complete. It remains only to reset the Limit Screws (Figure 4, #7; Figure 6, #14) as required by Paragraph 2.2.

J. The pen arm adjustment (25) is not a calibration tool: it's sole, intended purpose is to rezero the pen, if necessary, when changing charts and chart drives.

6.5 Dual Traverse Calibration

A. Using the Red Fine Adjustment Screw (20), level the Zero Set Assembly Plate (35), and tighten the four side screws.

B. Place the bucket weight onto the Bucket Platform (18), and put half the gage's capacity of weights onto the bucket weight.

C. Line up the Pen Arm Bracket (32) so that the screws line up straight across with the First and Second Traverse levers.

D. While holding the Pen Arm Bracket (32) steadily in place, insert the Linearity Setting Tool (Figure 4, #4) onto the First Traverse Link (this process is shown in Figure 3A). Line the link up straight, and tighten the screw (2). The link must be perpendicular to the base before the screw is tightened.

E. The same process is repeated on the Second Traverse link, as shown in Figure 3B. Continue to hold the Pen Arm Bracket steady while inserting the Linearity Setting Tool (4) onto the Second Traverse link. Line the link up perpendicular to the base, and tighten the screw (2).

F. Continue to hold the Pen Arm Bracket (Figure 6, #32) straight and steady. Place the complete Pen Arm (25, 27, and 28) onto the bracket. Line the pen up to the three inch or center line of the chart and tighten the screw (36). The Lever Screw (6) on each traverse should be straight across.

G. Release the Pen Arm Bracket (32). The Pen Arm should rise above the center line. Using the Large Zero Adjustment Knob (15), adjust the pen down to the center line. (The screw should be turned clockwise to adjust the pen down into place.)

H. Place the linearity setting tool back onto the First Traverse Link. Make sure the tool fits easily, without bending the link. Loosen the screw (Figure 3, #2). While holding the First Traverse Link and tool steady, move the pen down four division, and retighten the screw (2). (If a linearity setting tool is not available, make all adjustments while keeping the First Traverse Link Perfectly straight (perpendicular to the base).

I. Place the linearity setting tool into the Second Traverse Link. The tool should once again fit easily into the slot without bending the link. Loosen the screw (Figure 3B, #2). While holding all parts steady move the pen up four divisions on the chart, and retighten the screw (2).

J. Remove all the weights from the bucket weight.

K. Use the Large Zero Adjustment Knob (Figure 6, #15) to position the pen at zero. Tap the base of the gage to make sure the pen is not sticking and that it returns to zero.

L. Place the first weight onto the bucket weight and tap the base to check for sticking. DO NOT ADJUST IF THE PEN IS OFF THE DESIRED MARK.

M. One by one, place the remaining weights onto the bucket weight, tapping the gage each time to ensure non-sticking of the pen. Again, do not adjust if the pen is not exactly correct.

N. If the pen reads fast, i.e. higher than the expected increment, use the following steps to correct the problem:

1. Using the First Traverse Lever Link (8), loosen the two nuts at the top of the link (12).
2. Turn the Adjusting Screw (13) clockwise until the pen adjusts

Figure and Index Number	Manufacturer's Part Number	Description
6-25	-----	3-56 x 5/8" Fil. Hd. Screw, ST, ST
	-----	2-64 x 3/8" Oval Hd. Screw, ST, ST
-26	14253-4	Chart Drive Assembly, 8-day Spring Powered
	11460	Chart Drive Mechanism
	16474-4	Chart Drive Assembly, 3V Battery Powered
	15348	Chart Drive Mechanism
	8572-4	Chart Cylinder
	8570-4	Chart Clip
-27	992	Pen Arm Assembly
	918	Bearing (screw), Pen Arm
-28	559	Pen, #3LS
-29	8598	Base, Mechanism
	16473	Base, with overflow option
-30	-----	Chart Cylinder Flange
-31	933	Pen Shifter
-32	903	Bracket, Pen Arm (Stud)
	-----	3-56 x 3/16" Fil. Hd. Screw, ST, ST
-33	905	Shaft, Pen Arm Pivot
-34	-----	2-64 x 3/8" Oval Hd. Screw, M/S

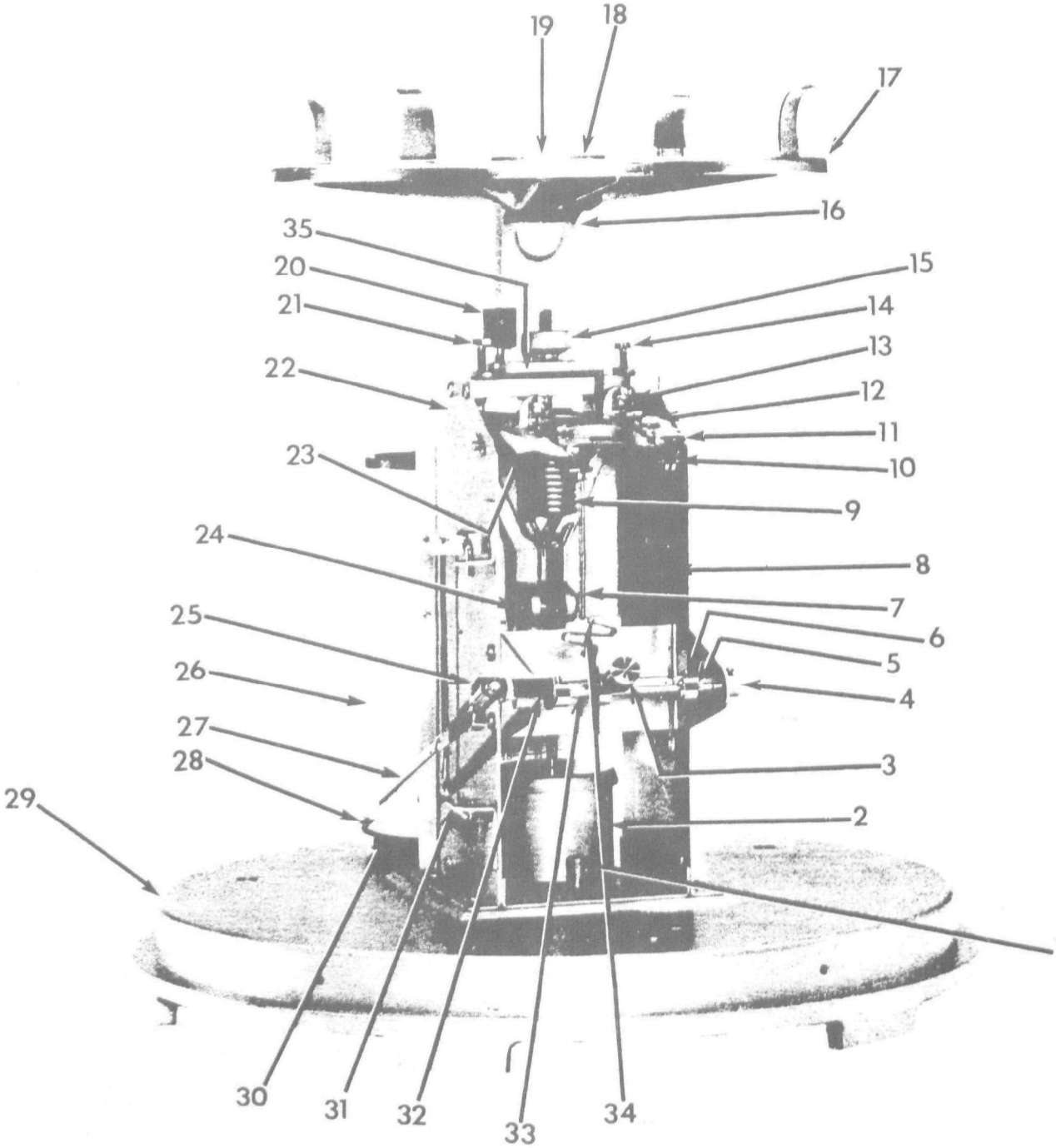

Figure 6. Rain Gage Mechanism, Single-Spring

Figure and Index Number	Manufacturer's Part Number	Description
7-1	8319	Zero Setting Assembly (Fine)
	8317-1	Setting Bar Assembly
	8306	Screw, Setting
	16072	Zero Setting Assembly (for 20" and 500MM Gages)
	16072-1	Setting Bar Assembly (for 20" and 500MM Gages)
	16472	Screw, Setting (for 20" and 500MM Gages)
-2	8586	Shaft, Dash Pot Pivot
	3279	Retainer Clip, Shaft
-3	-----	¼-20 x 7/8" Flat Hd. Screw, ST, ST
-4	908	Washer, Bucket Platform
-5	953	Platform Bucket
	16471	Platform, Bucket with overflow option
-6	8728	Funnel, Overflow
-7	-----	Spring Assembly (See Figure 6, Index Number 9 for Parts Breakdown)
-8	5898	Base, Mechanism
	16473	Base, Mechanism with overflow option

For further information, contact one of the following Sales offices.

BELFORT INSTRUMENT COMPANY
Factory and Sales
727 South Wolfe Street
Baltimore, Maryland 21231

(301) 342-2626
Telex: 87528 (BELFORT BAL)

Sales and Service
2620 Concord Avenue #102
Alhambra, California 91803

(818) 282-4893
Telex: 6831262 (BLF-CA)

Appendix C

METHOD 150.6 -- pH OF WET DEPOSITION BY ELECTROMETRIC DETERMINATION

Method 150.6 -- pH of Wet Deposition by Electrometric Determination

March 1986

Performing Laboratory:

Jackie Sauer
Jacqueline M. Lockard
Carla Jo Brennan
Mark E. Peden

Illinois State Water Survey
Analytical Chemistry Unit
2204 Griffith Drive
Champaign, Illinois 61820

Sponsoring Agency:

John D. Pfaff, Project Officer

Inorganic Analysis Section
Physical and Chemical Methods Branch
United States Environmental Protection Agency
Office of Research and Development
Environmental Monitoring and Support Laboratory
Cincinnati, Ohio 45268

INDEX

Section Number	Subject
1	Scope and Application
2	Summary of Method
3	Definitions
4	Interferences
5	Safety
6	Apparatus and Equipment
7	Reagents and Consumable Materials
8	Sample Collection, Preservation, and Storage
9	Calibration and Standardization
10	Quality Control
11	Procedure
12	Calculations
13	Precision and Bias
14	References

TABLES

1. Values for F/(2.3026 RT) at Different Temperatures.
2. Suitable pH Reference Electrodes for the Analysis of Wet Deposition Samples.
3. National Bureau of Standards (NBS) Salts for Reference Buffer Solutions.
4. Single-Operator Bias and Precision of pH Measurements Determined from Quality Control Check Samples.

FIGURES

1. Percentile pH Values Obtained from Wet Deposition Samples.
2. Time Required to Obtain Stable pH Response in Wet Deposition Samples.

1. SCOPE AND APPLICATION

1.1 This method is applicable to the determination of pH in wet deposition samples by electrometric measurement using either a pH half cell with a reference probe or a combination electrode as the sensor.

1.2 The term "wet deposition" is used in this method to designate rain, snow, dew, sleet, and hail.

1.3 Figure 1 represents a cumulative frequency percentile pH plot obtained from analyses of over five thousand wet deposition samples. These data may be used as an aid in the selection of appropriate calibration buffers.

2. SUMMARY OF METHOD

2.1 Electrodes approximate the pH of a solution by the Nernst equation that relates the potential measured by the pH electrode in a standard buffer solution to that measured in an unknown sample:

$$pH = pH_s + \frac{(E - E_s)F}{2.3026\ RT}$$

where:
- pH_s = pH of the standard buffer solution
- E = potential measured in an unknown sample
- E_s = potential measured in the buffer solution
- F = Faraday's constant
- R = gas constant
- T = absolute temperature ($T(^{\circ}C) + 273$)

Values of the factor F/(2.3026 RT) at different temperatures are provided in Table 1. The pH meter and the associated electrode(s) are calibrated with two reference buffer solutions that bracket the anticipated sample pH. The pH of the wet deposition sample is determined from this calibration.

3. DEFINITIONS

3.1 pH -- the negative logarithm to the base ten of the conventional hydrogen ion activity (14.1):

$$pH = -\log[H^+]$$

3.2 For definitions of other terms used in this method, refer to the glossary. For an explanation of the metric system including units, symbols, and conversion factors see American Society for Testing and Materials (ASTM) Standard E 380, "Metric Practices" (14.2).

4. INTERFERENCES

4.1 The pH meter and the associated electrode(s) reliably measure pH in nearly all aqueous solutions and in general are not subject to solution interferences from color, turbidity, oxidants, or reductants.

4.2 The true pH of an aqueous solution is affected by the temperature. The electromotive force between the glass and the reference electrode is a function of temperature as well as pH. Temperature effects caused by a change in electrode output can be compensated for automatically or manually depending on the pH meter selected.

4.3 Organic materials dispersed in water appear to poison the glass electrode, particularly when analyzing low ionic strength solutions. Difficulty encountered when standardizing the electrode(s), erratic readings, or slow response times may be an indication of contamination of the glass bulb. To remove these coatings, refer to the manual accompanying the probe for the manufacturer's recommendations.

4.4 When analyzing samples that have low ionic strengths, such as wet deposition, an effect known as "residual junction potential" can lead to errors as large as 0.1 pH units (14.3). This error occurs when the junction potential of the sample differs greatly from that of the standard. These conditions are frequently met in wet deposition analyses when the pH electrode(s) is calibrated with high ionic strength standard reference buffers. This error is reduced by using a reference electrode with a ceramic junction.

4.5 When measuring the pH of wet deposition, the sample may be agitated to speed electrode response. Care must be taken, however, to avoid introducing a source of error known as "residual streaming potential" that can result in a significant difference between the stirred and unstirred pH of the sample (14.4). The magnitude of the streaming potential is dependent on the electrode(s) and on the stirring rate. Differences in pH for stirred and unstirred wet deposition samples when the electrode assembly has been calibrated only with quiescent reference standards average 0.05 pH units at a stirring rate of 4 revolutions per second.

4.5.1 Eliminate the errors associated with residual streaming potentials by agitating all calibration standards and wet deposition samples thoroughly to speed electrode response and then allowing each aliquot to become quiescent before taking a pH reading.

4.5.2 If magnetic stirring is used, take care not to contaminate the sample when inserting the stirring bar. Maintain an air space between the surface of the stirring motor and the sample container to prevent heating the wet deposition sample.

5. SAFETY

5.1 The reference buffer solutions, sample types, and most reagents used in this method pose no hazard to the analyst. Use a fume hood, protective clothing, and safety glasses when handling concentrated nitric (Sect. 7.4) and hydrochloric acids (Sect. 7.5.1) and sodium hydroxide (Sect. 7.5.3-7.5.4).

5.2 Follow American Chemical Society guidelines regarding the safe handling of chemicals used in this method (14.5).

6. APPARATUS AND EQUIPMENT

6.1 LABORATORY pH METER -- The meter may have either an analog or digital display with a readability of 0.01 pH units. A meter that has separate calibration and slope adjustment features and is electrically shielded to avoid interferences from stray currents or static charge is necessary. It may be powered by battery or 110 V AC line; if battery powered, the meter must have a battery check feature. A temperature compensator control to allow accurate measurements at temperatures other than 25°C is desirable.

6.2 SENSING ELECTRODE -- Select a sensing electrode constructed of general purpose glass. This electrode type is characterized by low resistance, quick response, and has a reliable range of 0-14 pH units. Refer to the manual accompanying the probe for the manufacturer's recommendations on electrode storage.

6.3 REFERENCE ELECTRODE -- The reference electrode recommended for wet deposition analysis is one equipped with a ceramic junction. The ceramic construction minimizes differences in potential between high ionic strength buffers and low ionic strength samples thus reducing errors from residual junction potential (14.3). A reference probe equipped with a ceramic junction in an annular ring configuration generates a more stable potential in less time due to a higher flow of internal electrolyte into the solution. Single pore ceramic frit junctions also provide adequate electrolyte flow. Table 2 lists suitable reference electrodes that have been found to be satisfactory. Other electrodes having similar characteristics are also suitable. Refer to the manual accompanying the probe for the manufacturer's recommendations on electrode storage.

6.4 COMBINATION ELECTRODE -- The combination electrode combines the indicating and reference elements in a single unit. Since sample volume requirements are a consideration when analyzing wet deposition samples, combination electrodes are more convenient than separate glass and reference electrodes. Refer to the manual accompanying the probe for the manufacturer's recommendations on electrode storage.

6.5 TEMPERATURE CONTROL -- To ensure accurate results, use either a constant temperature water bath, a temperature compensator, or a thermometer to verify that all standards and samples are maintained at temperatures within $\pm 1^{\circ}C$ of one another. If a thermometer is used, select one capable of being read to the nearest $1^{\circ}C$ and covering the range 0°-$40^{\circ}C$.

6.6 STIRRING DEVICE (optional) -- electric or water-driven. If an electric stirrer is selected, leave an air gap or place an insulating pad between the stirrer surface and the solution container to minimize heating of the sample. Use a TFE-fluorocarbon-coated stirring bar.

6.7 LABORATORY FACILITIES -- Laboratories used for the analysis of wet deposition samples should be free from external sources of contamination. The use of laminar flow clean air workstations is recommended for sample processing and preparation to avoid the introduction of airborne contaminants. Samples should always be capped or covered prior to analysis. A positive pressure environment within the laboratory is also recommended to minimize the introduction of external sources of contaminant gases and particulates. Windows within the laboratory should be kept closed at all times and sealed if air leaks are apparent. The use of disposable tacky floor mats at the entrance to the laboratory is helpful in reducing the particulate loading within the room.

7. REAGENTS AND CONSUMABLE MATERIALS

7.1 PURITY OF REAGENTS -- Use reagent grade chemicals for all solutions. All reagents shall conform to the specifications of the Committee on Analytical Reagents of the American Chemical Society (ACS) where such specifications are available.

7.2 PURITY OF WATER -- Use water conforming to ASTM Specification D 1193, Type II (14.6). Point of use 0.2 micrometer filters are recommended for all faucets supplying ASTM Type II water to prevent the introduction of bacteria and/or ion exchange resins into reagents, standard solutions, and internally formulated quality control check solutions.

7.3 QUALITY CONTROL CHECK SAMPLE (QCS) (5.0×10^{-5} N HNO_3) -- Dilute 1.0 mL of concentrated nitric acid (HNO_3, sp gr 1.42) to 1 L with water (Sect 7.2). Dilute 3.2 mL of this stock solution to 1 L with water (Sect 7.2). The resulting solution has a pH of 4.30 $\pm$ 0.10 at $25^{\circ}C$. Store at room temperature in a high density polyethylene or polypropylene container. This solution is stable for one year.

7.4 REFERENCE BUFFER SOLUTIONS -- Table 3 identifies each buffer salt by its National Bureau of Standards (NBS) number and provides a recommended drying procedure prior to use. Store the reference buffer solutions in polyethylene or chemical-resistant glass bottles and replace after one year or sooner if a visible change such as the development of colloidal or particulate materials is observed.

7.4.1 Phthalate Reference Buffer Solution (0.02 N HCl, 0.05 N $KHC_8H_4O_4$) -- Add 83.0 mL of concentrated hydrochloric acid (HCl, sp gr 1.19) to water (Sect. 7.2) and dilute to 1 L. Dissolve 10.20 g of potassium hydrogen phthalate ($KHC_8H_4O_4$) in 22.3 mL of the hydrochloric acid solution and dilute to 1 L with water (Sect. 7.2). This solution has a pH of 3.00 at 25°C.

7.4.2 Phthalate Reference Buffer Solution (0.05 N $KHC_8H_4O_4$) -- Dissolve 10.12 g of potassium hydrogen phthalate ($KHC_8H_4O_4$) in water (Sect. 7.2) and dilute to 1 L. This solution has a pH of 4.00 at 25°C.

7.4.3 Phosphate Reference Buffer Solution (0.005 N NaOH, 0.05 N KH_2PO_4) -- Dissolve 4.00 g of sodium hydroxide (NaOH) in water (Sect. 7.2) and dilute to 1 L. Dissolve 6.80 g of potassium dihydrogen phosphate (KH_2PO_4) in 56.0 mL of the hydroxide solution and dilute to 1 L with water (Sect. 7.2). This solution has a pH of 6.00 at 25°C.

7.4.4 Phosphate Reference Buffer Solution (0.03 N NaOH, 0.05 N KH_2PO_4) -- Dissolve 40.0 g of sodium hydroxide (NaOH) in water (Sect. 7.2) and dilute to 1 L. Dissolve 6.80 g of potassium dihydrogen phosphate (KH_2PO_4) in 29.1 mL of the hydroxide solution and dilute to 1 L with water (Sect. 7.2). This solution has a pH of 7.00 at 25°C.

7.4.5 Commercial Buffer Solutions -- Commercially available buffer solutions traceable to NBS buffers are adequate for standardization. These commercial buffer solutions usually have pH values near 3, 4, 6, and 7, the exact pH and use temperature being provided by the supplier of the specific buffer.

7.5 SAMPLE CONTAINERS -- Use glass or polyolefin sample cups that have been thoroughly rinsed with water (Sect. 7.2) before use.

8. SAMPLE COLLECTION, PRESERVATION AND STORAGE

8.1 Collect samples in high density polyethylene (HDPE) containers that have been thoroughly rinsed with water (Sect. 7.2). Do not use strong mineral acids or alkaline detergent solutions for cleaning collection vessels. Residual acids may remain in the polyethylene matrix and slowly leach back into the sample. Alkaline detergents may also leave residues that may affect the sample chemistry. Cap collection bottles after cleaning to prevent contamination from

airborne contaminants. Air dry collection buckets in a laminar flow clean air workstation and wrap in polyethylene bags prior to use. If a laminar flow workstation is not available, pour out any residual rinse water and bag the buckets immediately. Do not dry the bucket interior by any method other than air drying in a laminar flow clean air workstation.

8.2 The frequency of sample collection and the choice of sampler design are dependent on the monitoring objectives. In general, the use of wet-only samplers is recommended to exclude dry deposition contributions, minimize sample contamination, retard evaporation, and enhance sample stability. Sample collection frequency may vary from sequential sampling within a wet deposition event to weekly sampling periods. Collection periods of more than one week are not recommended since sample integrity may be compromised by longer exposure periods.

8.3 The dissolution of particulate materials and the presence of microbial activity will affect the stability of hydrogen ions (pH) in wet deposition samples (14.7, 14.8). This instability generally results in a decrease in hydrogen ions (higher pH). Measurements of pH should be made immediately after sample collection and thermal equilibration with calibration buffers. Refrigeration of samples at 4°C will minimize but not prevent a decrease in the hydrogen ion content.

8.3.1 Filtration of samples through a 0.45 micrometer membrane leached with water (Sect. 7.2) is effective at stabilizing pH values that are influenced by the dissolution of alkaline particulate matter (14.7). Monitoring of the filtration procedure is necessary to ensure that samples are not contaminated by the membrane or filtration apparatus.

8.3.2 A biocide such as chloroform ($CHCl_3$) may be used to stabilize the organic acid component of the measured pH and to prevent pH changes due to biological reactions on other sample constituents (14.8). Add the chloroform (0.5 mL per 250 mL sample) to a separate sample aliquot that will be used only for the measurement of pH.

9. CALIBRATION AND STANDARDIZATION

9.1 Turn on the meter and allow it to warm up according to manufacturer's instructions.

9.2 If necessary, add filling solution to the electrode before using. Maintain the filling solution level at least one inch above the level of the sample surface to ensure proper electrolyte flow rate.

9.3 Determine the temperature of the wet deposition sample. Allow sample, buffers, and QCS solutions to reach room temperature before making pH measurements or bring the temperature of all solutions to within ±1°C of each other.

9.4 Select two reference buffer solutions that bracket the anticipated pH of the wet deposition sample. The difference between the nominal pH values of the two buffers should not exceed three pH units. Buffer solutions with pH's of 7.00 and 4.00 are recommended for wet deposition samples.

9.5 CALIBRATION FUNCTION

9.5.1 Rinse the electrode(s) with three changes of water (Sect. 7.2) or with a flowing stream from a wash bottle. Dispense two aliquots of the buffer with the higher pH into separate, clean sample cups. Insert the electrode(s) into one aliquot for 30 seconds.

9.5.2 Remove the electrode(s) from the first aliquot and insert directly into the second. Allow either two minutes for equilibration or allow sufficient time for the reading to remain steady within ±0.01 pH units for 30 seconds.

9.5.3 Adjust the calibration control until the reading corresponds to the temperature corrected value of the reference buffer solution.

9.6 SLOPE FUNCTION

9.6.1 Rinse the electrode(s) with three changes of water (Sect. 7.2) or with a flowing stream from a wash bottle. Dispense two aliquots of the second reference buffer solution into separate, clean sample cups. Insert the electrode(s) into one aliquot for 30 seconds.

9.6.2 Remove the electrode(s) from the first aliquot and insert directly into the second. Allow the system to equilibrate as directed in Sect. 9.5.2.

9.6.3 Adjust the slope function until the reading corresponds to the temperature corrected value of the reference buffer solution.

9.7 CALIBRATION CHECK

9.7.1 Remove the electrode(s), rinse thoroughly, and place into the first reference buffer solution. If the pH does not read within ±0.01 units of the temperature corrected value, repeat the calibration procedure until the buffers agree.

10. QUALITY CONTROL

10.1 Each laboratory using this method should develop formalized quality control protocols to continually monitor the bias and precision of all measurements. These protocols are required to ensure that the measurement system is in a state of statistical control. Estimates of bias and precision for wet deposition analyses cannot be made unless these control procedures are followed. Detailed guidelines for the development of quality assurance and quality control protocols for precipitation measurement systems are published in a manual available from the United States Environmental Protection Agency, Research Triangle Park, NC 27711 (14.9). Included in this manual are procedures for the development of statistical control charts for use in monitoring bias and precision as well as recommendations for the introduction of reagent blanks, laboratory duplicates, field duplicates, spike samples, and performance evaluation samples. These guidelines are to be used by all laboratories involved with wet deposition measurements.

10.2 ESTABLISHMENT OF WARNING AND CONTROL LIMITS -- Warning and control limits are used to monitor the analyses of quality control check samples (QCS).

10.2.1 Quality Control Check Samples (QCS) -- Calculate warning and control limits for QCS solutions from a minimum of ten analyses performed on ten days to provide a realistic estimate of method variability. Calculate a standard deviation (s) for the pH measurements for each QCS solution. Use the certified or NBS traceable pH value as the mean (target) value ($\bar{x}$) for determining the control limits. A warning limit of $\pm 2s$ and a control limit of $\pm 3s$ should be used. Constant positive or negative measurements with respect to the true value are indicative of a method or procedural bias. If the pH measurements for the QCS solutions fall outside of the $\pm 3s$ limits, recalibrate the system and reanalyze all samples from the last time the system was in control. If two successive QCS pH measurements are outside of the $\pm 2s$ limits, verify the meter calibration according to Sect. 10.5 before continuing with sample measurements. The standard deviations used to generate the QCS control limits should be comparable to the single operator precision reported in Table 4. Reestablish new warning and control limits whenever instrumental operating conditions are varied or QCS concentrations are changed.

10.2.2 All warning and control limits should be reevaluated on a continual basis as additional data are collected during routine analyses. The limits should be broadened or narrowed if a recalculated standard deviation under similar operating conditions provides a different estimate of the procedure variability.

10.3 Monitor the cleaning procedure by pouring a volume of water (Sect. 7.2) that approximates the median sample size into the collection vessel. Allow the water to remain in the sealed or capped collection container for at least 24 hours and determine the solution pH. If the measured pH is not within the range of 5.4-6.0, a contamination problem is indicated in the cleaning procedure. Corrective action should be taken before the sampling containers are used for the collection of wet deposition.

10.4 Electrodes used for the measurement of wet deposition samples should not be used for other sample types. Strongly acidic or basic solutions may cause electrode degradation and result in biased measurements and/or slow response in precipitation samples. Similarly, samples characterized by high concentrations of organic matter may leave a residue on the glass sensing bulb resulting in slow electrode response.

10.5 Verify the meter calibration after every ten samples and at the end of each day's analyses using both reference buffer solutions. The pH measured for the calibration buffers must agree within ± 0.02 of the temperature corrected value reported for each buffer. If the measured pH of either buffer falls outside of these limits, recalibrate the electrode/meter assembly and reanalyze those samples analyzed since the last time the system was in control.

10.6 Determine the pH of a quality control check sample (QCS) after the meter and electrode assembly have been calibrated. This sample may be formulated in the laboratory, obtained from the National Bureau of Standards (NBS Standard Reference Material 2694, Simulated Rainwater), or the United States Environmental Protection Agency (NBS Traceable Reference Material). Verify the accuracy of internally formulated QCS solutions with an NBS traceable standard before acceptance as a quality control check. The check sample selected must be within the range of the calibration buffers and should approximate the pH range of the samples to be analyzed. If the measured value for the QCS is not within the specified limits of the control solution, measure a second aliquot. Failure to obtain acceptable results on the second aliquot indicates a problem with the electrode or meter. Check the pH meter according to the manufacturer's guidelines. If an electrode problem is indicated, replace the electrode and repeat the calibration procedure before measuring the QCS again. Plot the data obtained from the QCS checks on a control chart for routine assessments of bias and precision.

10.6.1 QCS measurements should be made after every ten samples or after completion of a batch of samples consisting of less than ten. If the QCS measurement is out of the predetermined control limits, check the calibration buffers and recalibrate if any one of the buffer values has shifted by more than 0.02 pH units. Recheck the QCS and reanalyze all samples from the last time the measurement system was in control.

10.7 Submit a Field Blank (FB) to the laboratory for every 20 samples. The FB may consist of a water sample (Sect. 7.2) or a known reference solution that approximates the concentration levels characteristic of wet deposition. The FB is poured into the sampling vessel at the field site and undergoes identical processing and analytical protocols as the wet deposition sample(s). Use the analytical data obtained from the FB to determine any contamination introduced in the field and laboratory handling procedures. The data from the known reference solution can be used to calculate a system precision and bias.

10.8 Participation in performance evaluation studies is recommended for precipitation chemistry laboratories. The samples used for these performance audits should contain the analytes of interest at concentrations within the normal working range of the method. The true values are unknown to the analyst. Performance evaluation studies for precipitation chemistry laboratories are conducted semiannually by the USEPA Performance Evaluation Branch, Quality Assurance Division, Research Triangle Park, NC 27711.

11. PROCEDURE

11.1 Bring all buffers, solutions, and samples to ambient temperature making sure any necessary compensation is made for deviations in temperature (Sect. 6.5).

11.2 Calibrate the electrode assembly with two reference buffer solutions as described in Sect. 9.1-9.7.

11.3 After the electrode(s) and meter are calibrated, analyze a QCS sample. If the measured value for the QCS is not within the specified limits (Sect. 10.2.1), refer to Sect. 10.6.

11.4 SAMPLE ANALYSIS

11.4.1 Rinse the electrode(s) with three changes of water (Sect. 7.2) or with a flowing stream from a wash bottle. Dispense two aliquots of wet deposition sample into separate, clean sample cups. Insert the electrode(s) into one aliquot for 30 seconds.

11.4.2 Remove the electrode(s) from the first aliquot and insert directly into the second, once again allowing the system time to stabilize. Record the pH measurements when readings differ by no more than ± 0.01 pH units within a 30 second period. Record the pH and the temperature of the sample.

Note: The time necessary for the system response to stabilize depends on the pH of the sample. As Figure 2 illustrates, the pH electrode response time is usually three to five minutes for samples with a pH$\leq$5.5. For samples with pH>5.5, a stable response is usually generated in five to seven minutes.

12. CALCULATIONS

12.1 Most pH meters are calibrated in pH units and the pH of the sample is obtained directly by reading the meter scale. Record pH measurements to the nearest hundredth of a pH unit and sample temperature to the nearest degree.

13. PRECISION AND BIAS

13.1 Single-operator precision and bias data were obtained using three quality control check samples. The results are tabulated in Table 4.

14. REFERENCES

14.1 Annual Book of ASTM Standards, Part 31, "Definitions of Terms Relating to Water," Standard D 1129-82b, 1982, p. 5.

14.2 Annual Book of ASTM Standards, Part 31, "Excerpts from Standard for Metric Practice," Standard E 380-79, 1982, pp. 679-694.

14.3 Koch, W. G., Marinenko, G., and Stolz, J. W., "Simulated Precipitation Reference Materials, IV," National Bureau of Standards (U.S.), NBSIR 82-2581, June 1982, p. 14.

14.4 McQuaker, N. R., Kluckner, P. D., and Sandberg, D. K., "Chemical Analysis of Acid Precipitation: pH and Acidity Determinations," Environ. Sci. Technol., **Vol. 17**, No. 7, 1983, pp. 431-435.

14.5 "Safety in Academic Chemistry Laboratories," American Chemical Society Publication, Committee on Chemical Safety, 3rd Edition, 1979.

14.6 Annual Book of ASTM Standards, Part 31, "Standard Specification for Reagent Water," Standard D 1193-77, 1982, p. 39.

14.7 Peden, M. E. and Skowron, L. M., "Ionic Stability of Precipitation Samples," Atmos. Environ. **12**, 1978, p. 2343-2349.

14.8 Keene, W. C. and Galloway, J. N., "Organic Acidity in Precipitation of North America," Atmos. Environ. **18**, 1984, p. 2491-2497.

14.9 Topol, L. E., Lev-On, M., Flanagan, J., Schwall, R. J., Jackson, A. E., Quality Assurance Manual for Precipitation Measurement Systems, 1985, U.S. Environmental Protection Agency, Environmental Monitoring Systems Laboratory, Research Triangle Park, NC 27711.

Table 1. Values for F/(2.3026 RT) at Different Temperatures.

Temperature, °C	F/(2.3026 RT), V^{-1}
0	18.4512
5	18.1195
10	17.7996
15	17.4907
20	17.1924
25	16.9041
30	16.6253
35	16.3555
40	16.0944
45	15.8414

The above data were calculated using a precise value of the logarithmic conversion factor (2.302585) and values of the fundamental constants.

F = 96,487.0 C/eq
R = 8.31433 J/K mol
T = 273.15 + °C

Table 2. Suitable pH Reference Electrodes for the Analysis of Wet Deposition Samples.

Manufacturer	Model Number	Electrode Type
Beckman	39417	glass bodied with ceramic junction (calomel)
Corning	476109	glass bodied with ceramic junction (calomel)
Orion (Ross)	800500	glass bodied reference half cell

Table 3. National Bureau of Standards (NBS) Salts for Reference Buffer Solutions.

NBS Standard Sample Designation	Buffer Salt	Drying Procedure
186-1-c	potassium dihydrogen phosphate	2 h in oven at 130°C
185-f	potassium hydrogen phthalate	2 h in oven at 110°C

The buffer salts listed above can be purchased from the Office of Standard Reference Materials, National Bureau of Standards, Washington, D. C. 20234.

Table 4. Single-Operator Bias and Precision of pH Measurements Determined from Quality Control Check Samples.

Theoretical pH	Mean Measured pH	n[a]	Bias,[b] pH	Bias,[b] %	Precision,[b] s, pH	Precision,[b] RSD %
3.61	3.63	15	0.02	0.6	0.01	0.3
4.30	4.32	72	0.02	0.5	0.01	0.2
5.60	5.42	80	-0.18	-3.2	0.04	0.7

The above data were obtained from records of pH measurements made under the direction of the NADP quality assurance program. The solutions used were a National Bureau of Standard (NBS) simulated rainwater sample (Research Material #8409-11, pH = 3.61), a 5.01×10^{-5} N nitric acid solution (pH = 4.30), and a 0.0005 M potassium chloride solution (pH = 5.60).

a. Number of replicates.
b. Calculations of bias and precision data were made using hydrogen ion concentrations.

Figure 1. Percentile Concentration Values Obtained from Wet Deposition Samples: pH

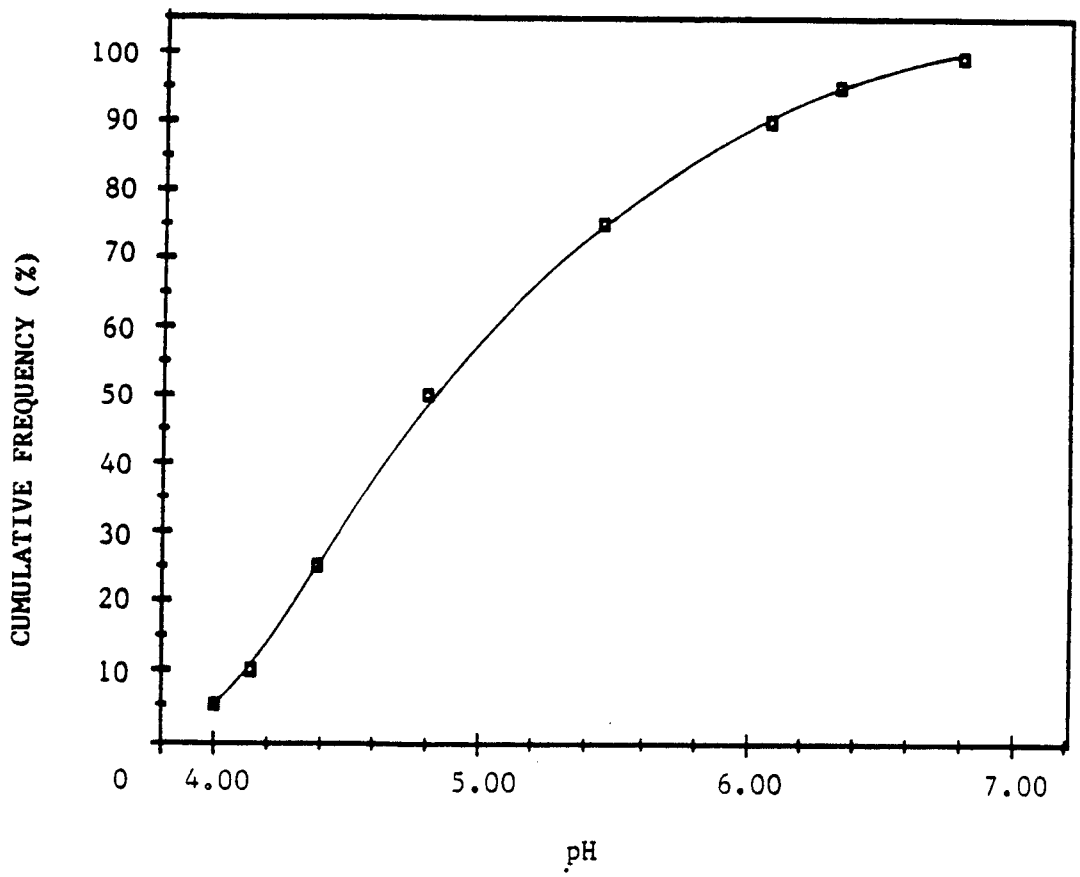

Figure 2. Time Required to Obtain Stable pH Response in Wet Deposition Samples.

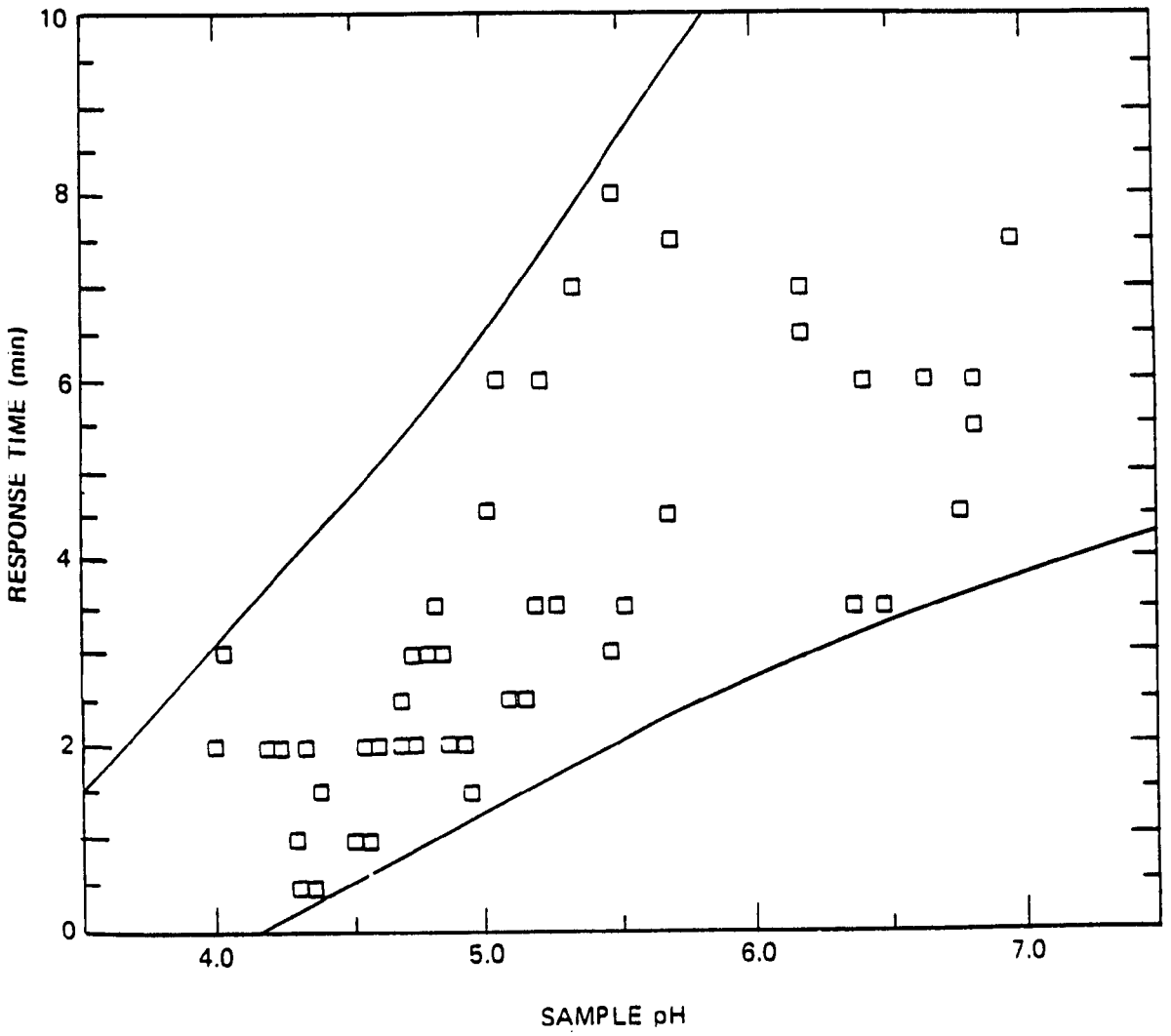

Appendix D

METHOD 120.6 -- SPECIFIC CONDUCTANCE IN WET DEPOSITION BY ELECTROLYTIC DETERMINATION

Method 120.6 -- Specific Conductance in Wet Deposition by Electrolytic Determination

March 1986

Performing Laboratory:

Carla Jo Brennan
Jackie Sauer
Mark E. Peden

Illinois State Water Survey
Analytical Chemistry Unit
2204 Griffith Drive
Champaign, Illinois 61820

Sponsoring Agency:

John D. Pfaff, Project Officer

Inorganic Analysis Section
Physical and Chemical Methods Branch
United States Environmental Protection Agency
Office of Research and Development
Environmental Monitoring and Support Laboratory
Cincinnati, Ohio 45268

INDEX

Section Number	Subject
1	Scope and Application
2	Summary of Method
3	Definitions
4	Interferences
5	Safety
6	Apparatus and Equipment
7	Reagents and Consumable Materials
8	Sample Collection, Preservation, and Storage
9	Calibration and Standardization
10	Quality Control
11	Procedure
12	Calculations
13	Precision and Bias
14	References

TABLES

1. Single-Operator Bias and Precision for Specific Conductance Measurements Determined from Quality Control Check Samples.
2. Specific Conductance of KCl Solutions at 25°C as a Function of the Molar Concentration.

FIGURES

1. Percentile Conductance Values Obtained from Wet Deposition Samples.

1. SCOPE AND APPLICATION

1.1 This method is applicable to the determination of specific conductance in wet deposition samples by electrolytic measurement using a conductance cell as the sensor.

1.2 The term "wet deposition" is used in this method to designate rain, snow, dew, sleet, and hail.

1.3 Figure 1 represents a cumulative frequency percentile specific conductance plot obtained from analyses of over five thousand wet deposition samples. These data may be used as an aid in the selection of calibration standards. The operating range of this method is 0.10-1000 uS/cm. Most wet deposition samples have a specific conductance in the range of 5 to 50 uS/cm.

2. SUMMARY OF METHOD

2.1 Specific conductance is a numerical expression of the ability of an aqueous solution to carry an electric current. This ability depends on the presence of ions, their total concentration, mobility, and valence. Conductance is also a function of the relative concentrations of the ions in solution and of the solution temperature. The physical measurement made in a laboratory determination of specific conductance is resistance, expressed as:

$$R = K\ (l/a)$$

where: a = cross section of conductor (cm^2)
l = length of conductor (cm)

$$K = \text{cell constant} = \frac{\text{Measured Resistance}}{\text{Specific Resistance}}$$

Specific resistance is the resistance of a cube 1 cm on an edge. Since commercially available conductance cells measure a given fraction of the specific resistance, it is necessary to include the cell constant when determining specific conductance. The conductance meter and the associated cell are calibrated using potassium chloride solutions of known specific conductances comparable to that found in wet deposition samples.

3. DEFINITIONS

3.1 ELECTRICAL CONDUCTANCE -- the reciprocal of the resistance in ohms measured between opposite faces of a centimeter cube of an aqueous solution at a specified temperature (14.1).

3.2 For definitions of other terms used in this method, refer to the glossary. For an explanation of the metric system including units, symbols, and conversion factors see American Society for Testing and Materials (ASTM) Standard E 380, "Metric Practices" (14.2).

4. INTERFERENCES

4.1 The conductance cell reliably measures specific conductance in nearly all aqueous solutions and in general is not subject to solution interferences from color, turbidity, oxidants, or reductants.

4.2 Exposure of samples to laboratory atmosphere can result in the absorption of carbon dioxide, ammonia, and other gases by the solution being analyzed. With this absorption of additional electrolytes, the measured conductance of the sample is elevated. To minimize errors, keep all sample aliquots tightly covered prior to analysis.

4.3 Organic materials dispersed in water will affect the cell constant and the accuracy of measurements by coating the electrode surface. To remove these coatings, refer to the manual accompanying the conductance cell for the manufacturer's recommendations for cleaning the cell.

5. SAFETY

5.1 The calibration standards, sample types, and most reagents used in this method pose no hazard to the analyst. Use a fume hood, protective clothing, and safety glasses when handling concentrated nitric acid (Sect. 7.4).

5.2 Follow American Chemical Society guidelines regarding the safe handling of chemicals used in this method (14.3).

6. APPARATUS AND EQUIPMENT

6.1 SPECIFIC CONDUCTANCE METER -- Select an instrument equipped with a manual or electrically balanced conductance bridge, powered by battery or 110 V AC line. If battery powered, however, the meter must have a battery check feature. Select an instrument capable of measuring conductance with an error not exceeding 1% or 1 uS/cm, whichever is greater. The meter used must have a range of 0.1-1000 uS/cm and readability to 0.1 uS/cm sensitivity.

6.1.1 Check the electronic calibration of the meter monthly and adjust when necessary. This may be accomplished either through use of an internal calibration feature or an external calibration set.

6.3 SPECIFIC CONDUCTANCE CELL -- Conductance cells are available in pipette, flow-through, cup, or immersion form. Select a cell having a constant of 1.0 or 0.1. A sample volume requirement of 10 mL or less is desirable.

6.3.1 When not in use, rinse the cell thoroughly with water (Sect. 7.2) and store according to manufacturer's guidelines.

6.3.2 If readings become erratic, refer to the manual accompanying the cell for the manufacturer's recommendations.

6.4 THERMOMETER -- Select a thermometer capable of being read to the nearest 0.1°C and covering the range 0°-40°C.

6.5 LABORATORY FACILITIES -- Laboratories used for the analysis of wet deposition samples should be free from external sources of contamination. The use of laminar flow clean air workstations is recommended for sample processing and preparation to avoid the introduction of airborne contaminants. Samples should always be capped or covered prior to analysis. A positive pressure environment within the laboratory is also recommended to minimize the introduction of external sources of contaminant gases and particulates. Windows within the laboratory should be kept closed at all times and sealed if air leaks are apparent. The use of disposable tacky floor mats at the entrance to the laboratory is helpful in reducing the particulate loading within the room. Maintain laboratory temperature within ±3°C.

7. REAGENTS AND CONSUMABLE MATERIALS

7.1 PURITY OF REAGENTS -- Use reagent grade chemicals for all solutions. All reagents shall conform to the specifications of the Committee on Analytical Reagents of the American Chemical Society, where such specifications are available.

7.2 PURITY OF WATER -- Use water conforming to ASTM Specification D 1193, Type II (14.4). Point of use 0.2 micrometer filters are recommended for all faucets supplying ASTM Type II water to prevent the introduction of bacteria and/or ion exchange resins into reagents, standard solutions, and internally formulated quality control check solutions.

7.3 POTASSIUM CHLORIDE REFERENCE SOLUTION (5.0×10^{-4} N) -- Dissolve 37.28 mg anhydrous potassium chloride (KCl), dried at 105°C for one hour, in water (Sect. 7.2) and dilute to 1 L. This solution has a specific conductance of 73.9 uS/cm at 25°C. Store the reference solution at room temperature in a tightly sealed high density polyethylene or polypropylene container for a period not exceeding one year.

7.3.1 Determine if the meter reading is linear throughout all range settings using the reference solution described above. If not, recalibrate the meter at higher and/or lower settings as needed with different concentrations of KCl reference solution prepared according to Table 2.

7.4 QUALITY CONTROL CHECK SAMPLE (5.0×10^{-5} N HNO_3) -- Dilute 1.0 mL of concentrated nitric acid (HNO_3, sp gr 1.42) to 1 L with water (Sect. 7.2). Dilute 3.2 mL of this stock solution to 1 L with water. The resulting solution has a conductance of 21.8 uS/cm at 25°C. Store at room temperature in a high density polyethylene or polypropylene container for a period not exceeding one year.

7.5 SAMPLE CONTAINERS -- Use glass or disposable polyolefin sample cups if the conductance cell selected requires a sample container. Rinse the sample cups a minimum of three times with water (Sect. 7.2) before use.

8. SAMPLE COLLECTION, PRESERVATION AND STORAGE

8.1 Collect samples in high density polyethylene (HDPE) containers that have been thoroughly rinsed with ASTM Type II water (7.2). Do not use strong mineral acids or alkaline detergent solutions for cleaning collection vessels. Residual acids may remain in the polyethylene matrix and slowly leach back into the sample. Alkaline detergents may also leave residues that may affect the sample chemistry. Cap collection bottles after cleaning to prevent contamination from airborne contaminants. Air dry collection buckets in a laminar flow clean air workstation and wrap in polyethylene bags prior to use. If a laminar flow workstation is not available, pour out any residual rinse water and bag the buckets immediately. Do not dry the bucket interior by any method other than air drying in a laminar flow clean air workstation.

8.2 The frequency of sample collection and the choice of sampler design are dependent on the monitoring objectives. In general, the use of wet-only samplers is recommended to exclude dry deposition contributions, minimize sample contamination, retard evaporation, and enhance sample stability. Sample collection frequency may vary from sequential sampling within a wet deposition event to weekly sampling periods. Collection periods of more than one week are not recommended since sample integrity may be compromised by longer exposure periods.

8.3 The dissolution of particulate materials and the presence of microbial activity will affect the stability of the ions in wet deposition samples (14.5). This instability can result in either an increase or a decrease in specific conductance of the solution. Measurements of conductance should be made immediately after sample collection and thermal equilibration with calibration standard(s). Refrigeration of samples at 4°C will minimize but not prevent changes in specific conductance.

8.3.1 Filtration of samples through a 0.45 micrometer membrane leached with water (Sect. 7.2) is effective at stabilizing changes in conductance that result from the dissolution of alkaline particulate matter (14.5). Monitoring of the filtration procedure is necessary to ensure that samples are not contaminated by the membrane or filtration apparatus.

9. CALIBRATION AND STANDARDIZATION

9.1 Bring all standards and samples to ambient temperature, ($\pm 1^{\circ}C$).

9.2 Rinse the specific conductance cell at least three times with the same volume of KCl standard as the aliquot to be measured. Measure the conductance of a fourth portion of the KCl standard. The conductance measured for the calibration solution must agree within ± 2 uS/cm of the nominal value.

9.3 CELL CONSTANT

9.3.1 If the meter selected requires that a cell constant be calculated, use the equations provided in Sect. 12.2.

9.3.2 If the specific conductance of the reference solution is incorporated into the meter for direct readout of conductance, follow the manufacturer's guidelines for calibration.

10. QUALITY CONTROL

10.1 Each laboratory using this method should develop formalized quality control protocols to continually monitor the bias and precision of all measurements. These protocols are required to ensure that the measurement system is in a state of statistical control. Estimates of bias and precision for wet deposition analyses cannot be made unless these control procedures are followed. Detailed guidelines for the development of quality assurance and quality control protocols for wet deposition measurement systems are published in a manual available from the United States Environmental Protection Agency, Research Triangle Park, NC 27711 (14.6). Included in this manual are procedures for the development of statistical control charts for use in monitoring bias and precision as well as recommendations for the introduction of reagent blanks, laboratory duplicates, field duplicates, spike samples, and performance evaluation samples. These guidelines are to be used by all laboratories involved with wet deposition measurements.

10.2 ESTABLISHMENT OF WARNING AND CONTROL LIMITS -- Warning and control limits are used to monitor the analyses of quality control check samples (QCS).

10.2.1 Quality Control Check Samples (QCS) -- Calculate warning and control limits for QCS solutions from a minimum of ten analyses performed on ten days to provide a realistic estimate of the method variability. Calculate a standard deviation (s) for the measured conductance of each QCS solution. Use the certified or NBS traceable specific conductance as the mean (target) value ($\bar{x}$) for determining control limits. A warning limit of $\bar{x} \pm 2s$ and a control limit of $\bar{x} \pm 3s$ should be used. Constant positive or negative measurements with respect to the true value are indicative of a method or procedural bias. If the measured conductance for the QCS solutions fall outside of the $\pm 3s$

limits, recalibrate the system and reanalyze all samples from the last time the system was in control. If two successive QCS conductance measurements are outside of the ±2s limits, verify the meter calibration according to Sect. 10.5 before continuing with sample measurements. The standard deviations used to generate the QCS control limits should be comparable to the single operator precision reported in Table 1. Reestablish new warning and control limits whenever instrumental operating conditions are varied or QCS concentrations are changed.

10.2.2 All warning and control limits should be reevaluated on a continual basis as additional data are collected during routine analyses. The limits should be broadened or narrowed if a recalculated standard deviation under similar operating conditions provides a different estimate of the procedure variability.

10.3 Monitor the cleaning procedure by pouring a volume of water (Sect. 7.2) that approximates the median sample size into the collection vessel. Allow the water to remain in the sealed or capped collection container for at least 24 hours and determine the specific conductance of the solution. If the measured conductance is greater than 3 uS/cm, a contamination problem is indicated in the cleaning procedure. Corrective action should be taken before the sampling containers are used for the collection of wet deposition.

10.4 Conductance cells used for the measurement of wet deposition samples should not be used for other sample types. Strongly acidic or basic solutions may cause cell degradation and result in biased measurements. Similarly, samples characterized by high concentrations of organic matter may leave a residue on the cell resulting in inaccurate measurements.

10.5 Verify the meter calibration after every ten samples and at the end of each day's analyses. If the measured conductance falls outside of the limits described in Sect. 9.2, recalibrate the conductance meter assembly and reanalyze those samples analyzed since the last calibration.

10.6 Determine the conductance of a quality control check sample (QCS) after the meter and cell assembly have been calibrated. This sample may be formulated in the laboratory, obtained from the National Bureau of Standards (NBS Standard Reference Material 2694, Simulated Rainwater), or the United States Environmental Protection Agency (NBS Traceable Reference Material). Verify the accuracy of internally formulated QCS solutions with an NBS traceable standard before acceptance as a quality control check. The check sample selected should approximate the conductance of the samples to be analyzed. If the measured value for the QCS is not within the specified limits of the control solution, measure a second aliquot. Failure to obtain acceptable results on the second aliquot indicates a problem with the cell or meter. Check the conductance

meter according to the manufacturer's guidelines. If a cell problem is indicated, replace the cell and repeat the calibration procedure before measuring the QCS again. Plot the data obtained from the QCS checks on a control chart for routine assessments of bias and precision.

10.6.1 The conductance of the QCS should be measured after every ten samples or after completion of a batch of samples consisting of less than ten. If the QCS measurement is out of the predetermined control limits, check the calibration and recalibrate if it has shifted by more than 2 uS/cm. Recheck the QCS and reanalyze all samples from the last time the measurement system was in control.

10.7 Submit a Field Blank (FB) to the laboratory for every 20 samples. The FB may consist of a water sample (Sect. 7.2) or a known reference solution that approximates the concentration levels characteristic of wet deposition. The FB is poured into the sampling vessel at the field site and undergoes identical processing and analytical protocols as the wet deposition sample(s). Use the analytical data obtained from the FB to determine any contamination introduced in the field and laboratory handling procedures. The data from the known reference solution can be used to calculate a system precision and bias.

10.8 Participation in performance evaluation studies is recommended for wet deposition chemistry laboratories. The samples used for these performance audits should contain the analytes of interest at concentrations within the normal working range of the method. The true values are unknown to the analyst. Performance evaluation studies for wet deposition chemistry laboratories are conducted semiannually by the USEPA Performance Evaluation Branch, Quality Assurance Division, Research Triangle Park, NC 27711.

11. PROCEDURE

11.1 Determine the temperature of the wet deposition sample to be tested and bring all standards and samples to ambient temperature, ($\pm 1^{o}C$).

11.2 Calibrate the conductance assembly as described in Sect. 9.

11.3 After the cell and meter are calibrated, measure the QCS. If the measured value for the QCS is not within the specified limits (Sect. 10.2.1), refer to Sect. 10.6.

11.4 Rinse the cell at least three times with the same volume of water (Sect. 7.2) as the sample aliquot to be measured, discarding each rinse. Determine the specific conductance of a fourth portion of the water to the nearest 0.1 uS/cm. If the corrected specific conductance exceeds 1.0 uS/cm, the water is not suitable for use in specific conductance measurements. Discard the water and any standard solutions or quality control check samples that have been prepared using that water.

11.5 Rinse the cell at least three times with the same volume of water (Sect. 7.2) as the sample aliquot to be measured, discarding each rinse. Rinse the cell with an aliquot of the wet deposition sample to be measured. Discard the rinse solution. Determine the specific conductance of a second portion of the sample.

Note: When the same sample aliquot must be used for further analyses, measure the specific conductance prior to all other determinations. Measurement of pH especially must be postponed. Leakage of reference solution from a pH reference cell will alter the measured value of the specific conductance of the solution (14.7).

12. CALCULATIONS

12.1 If the meter selected has a feature that allows adjustment of the direct readout of the specific conductance standard to the theoretical value, no calculations are required.

12.2 CELL CONSTANT -- If the meter selected requires that a cell constant be calculated, follow the instructions provided below:

12.2.1 Compute the corrected cell constant, K_C, that includes the calculation for the cell constant, K, and temperature correction to 25°C, using the conductance value obtained in Sect. 9.2 and the following equation:

$$K_C = \frac{74 \text{ uS/cm}}{KCl_M}$$

where: KCl_M = conductance value measured for the KCl standard (uS/cm)

12.2.2 Determine the corrected specific conductance for the water (Sect. 7.2) using the corrected cell constant, the conductance value measured in Sect. 11.4, and the following equation:

$$W_C = K_C \times W_M$$

where: W_C = Corrected specific conductance value for the water sample (uS/cm)
W_M = Specific conductance value measured for the water sample (uS/cm)

12.2.3 Determine the corrected sample conductance using the following equation, the corrected cell constant, and the conductance value measured in Sect. 11.5.

$$S_C = K_C \times S_M$$

where: S_C = Corrected specific conductance value for the wet deposition sample (uS/cm)
S_M = Specific conductance value measured for the wet deposition sample (uS/cm)

12.3 Report specific conductance to the nearest tenth in units of uS/cm.

13. PRECISION AND BIAS

13.1 Single operator precision and bias were determined from measurements of quality control check samples that approximated the conductance range of wet deposition samples. The results are tabulated in Table 1.

14. REFERENCES

14.1 Annual Book of ASTM Standards, Part 31, "Definitions of Terms Related to Water," Standard D 1129-82b, 1982, p. 4.

14.2 Annual Book of ASTM Standards, Part 31, "Excerpts from Standard for Metric Practice," Standard E 380-79, 1982, pp. 679-694.

14.3 "Safety in Academic Chemical Laboratories," American Chemical Society Publication, Committee on Chemical Safety, 3rd Edition, 1979.

14.4 Annual Book of ASTM Standards, Part 31, "Standard Specification for Reagent Water," Standard D 1193-77, 1982, p. 39.

14.5 Peden, M. E. and Skowron, L. M., "Ionic Stability of Precipitation Samples," Atmos. Environ. 12, 1978, pp. 2343-2349.

14.6 Topol, L. E., Lev-On, M., Flanagan, J., Schwall, R. J., Jackson, A. E., Quality Assurance Manual for Precipitation Measurement Systems, 1985 U.S. Environmental Protection Agency, Environmental Monitoring Systems Laboratory, Research Triangle Park, NC 27711.

14.7 Koch, W. G., Marinenko, G., and Stolz, J. W., "Simulated Precipitation Reference Materials, IV," National Bureau of Standards (U.S.), NBSIR 82-2581, June 1982, p. 3.

Table 1. Single-Operator Bias and Precision of Specific Conductance Measurements Determined from Quality Control Check Samples.

Theoretical Conductance, uS/cm	Mean Measured Conductance, uS/cm	n[a]	Bias, uS/cm	Bias, %	Precision s, uS/cm	Precision RSD, %
21.8	22.0	80	0.2	1.0	0.3	1.4
128.0	128.2	9	0.2	0.1	2.0	1.6

The above data were obtained from the records of conductance measurements made under the direction of the NADP quality assurance program. The quality control solutions used were a 5.01×10^{-5} N nitric acid solution having a calculated specific conductance of 21.8 uS/cm at 25°C and a simulated rainwater solution (Research Material #8409-II) provided by the National Bureau of Standards.

a. Number of replicates.

Table 2. Specific Conductance of KCl Solutions at 25°C as a Function of the Molar Concentration.

Concentration, moles of KCl/L	Specific Conductance, uS/cm
0.0001	14.89
0.0002	29.71
0.0003	44.47
0.0004	59.20
0.0005	73.89
0.0006	88.55
0.0007	103.19
0.0008	117.80
0.0009	132.38
0.0010	146.95

Figure 1. Percentile Concentration Values Obtained from Wet Deposition Samples: Specific Conductance

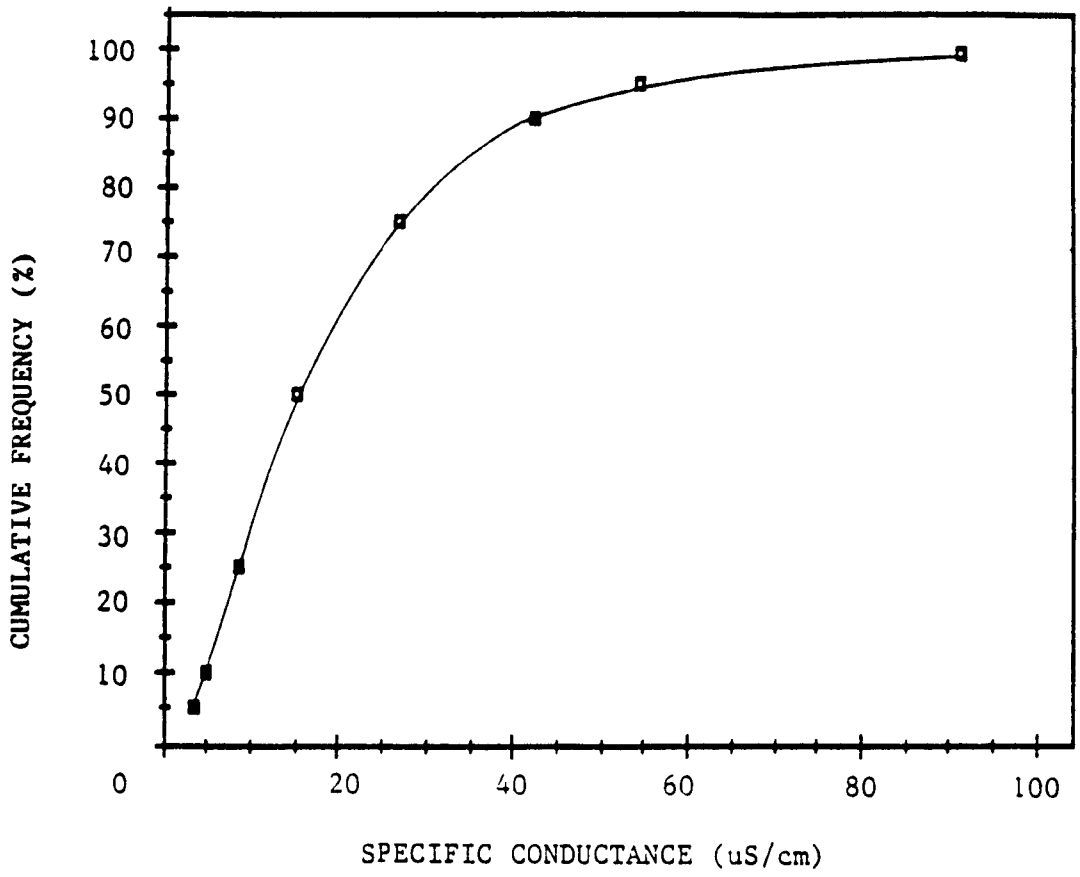

Appendix E

METHOD 305.6 -- ACIDITY IN WET DEPOSITION BY TITRIMETRIC DETERMINATION

METHOD 305.2 -- ACIDITY (TITRIMETRIC)

Method 305.6 -- Acidity in Wet Deposition by Titrimetric Determination

March 1986

Performing Laboratory:

Jacqueline M. Lockard
Kenni O. James
Carla Jo Brennan
Mark E. Peden

Illinois State Water Survey
Analytical Chemistry Unit
2204 Griffith Drive
Champaign, Illinois 61820

Sponsoring Agency:

John D. Pfaff, Project Officer

Inorganic Analysis Section
Physical and Chemical Methods Branch
United States Environmental Protection Agency
Office of Research and Development
Environmental Monitoring and Support Laboratory
Cincinnati, Ohio 45268

INDEX

Section Number	Subject
1	Scope and Application
2	Summary of Method
3	Definitions
4	Interferences
5	Safety
6	Apparatus and Equipment
7	Reagents and Consumable Materials
8	Sample Collection, Preservation, and Storage
9	Calibration and Standardization
10	Quality Control
11	Procedure
12	Calculations
13	Precision and Bias
14	References

TABLES

1. National Bureau of Standards (NBS) Salts for Reference Buffer Solutions.
2. Single-Operator Bias and Precision from Acidity Titrations of Quality Control Check Samples.

FIGURES

1. Sample Vessel Used for an Acidity Titration.
2. A Standard Titration Curve with Gran's Plot for an Equimolar Mixture of Dilute Nitric Acid and Acetic Acid.
3. A Standard Titration Curve with Gran's Plot for a Dilute Nitric Acid Solution.

1. SCOPE AND APPLICATION

1.1 This method is applicable to the titrimetric determination of strong and total acidity by electrometric measurement using either a pH half cell with a reference probe or a combination electrode as the sensor. The concentration of weak acids present is determined from the difference between the measured total and strong acidities. These guidelines outline the procedure by which titration to an end point pH is to be made on wet deposition samples.

1.2 The term "wet deposition" is used in this method to designate rain, snow, dew, sleet, and hail.

1.3 The method detection limit (MDL) determined from replicate analyses of a 5.0×10^{-5} N nitric acid solution is 5 ueq/L.

2. SUMMARY OF METHOD

2.1 The pH meter and the associated electrode(s) are calibrated against two reference buffer solutions that bracket the anticipated sample pH. Small increments of a sodium hydroxide solution are added to an unfiltered wet deposition sample. The course of the titration is followed by measuring the pH and the amount of titrant added as the titration progresses to a pH of 10.3. The strong acid equivalence point lies at the inflection point of the curve, i.e., at the point of maximum slope. The presence of dissociated weak acids in the sample will make the accurate determination of this equivalence point difficult. To reduce the potential for error when graphically determining the equivalence point, a method developed by Gran (14.1) is used. A plot of Gran's function versus volume of titrant added to the sample is constructed, from which strong, weak, and total acidities are derived.

DEFINITIONS

3.1 pH -- the negative logarithm to the base ten of the conventional hydrogen ion activity (14.2):

$$pH = -\log[H^+]$$

3.2 ACIDITY -- the quantitative capacity of aqueous media to react with hydroxyl ions.

3.3 TITRATION -- a method for determining the concentration of a dissolved substance in terms of the amount of a reagent of known concentration required to quantitatively react with a measured volume of the test solution.

3.4 EQUIVALENCE POINT -- the point in the process of a titration at which the titrated species and titrant are present in equivalent amounts.

3.5 For definitions of other terms used in this method, refer to the glossary. For an explanation of the metric system including units, symbols, and conversion factors see American Society for Testing and Materials (ASTM) Standard E 380, "Metric Practices" (14.3).

4. INTERFERENCES

4.1 The pH meter and the associated electrode(s) reliably measure pH in nearly all aqueous solutions and in general are not subject to solution interference from color, turbidity, oxidants, or reductants.

4.2 The true pH of an aqueous solution is affected by the temperature. The electromotive force between the glass and the reference electrode is a function of temperature as well as pH. Temperature effects caused by a change in electrode output can be compensated for automatically or manually depending on the pH meter selected.

4.3 Organic humic materials present in wet deposition samples degrade the glass electrode performance by coating the sensing bulb. Difficulty encountered when standardizing the electrode(s), erratic readings, or slow response times may be an indication of contamination of the glass bulb. To remove these coatings, refer to the manual accompanying the probe for the manufacturer's recommendations.

4.4 As discussed in Sect. 4.5 of Method 150.6 of this manual, measuring pH in solutions while stirring can result in errors due to residual streaming potentials. These errors are minimized by maintaining a constant stirring rate during both meter calibration and sample titration. The effect of streaming potentials is less important during titrimetric procedures since the relative, and not the absolute, change in pH values with added titrant is used to calculate acidity. Stirring the sample throughout the titration ensures complete mixing of titrant and sample and reduces the time necessary to complete the procedure.

Note: When magnetic stirring is used, avoid sample contamination when inserting the stirring bar. Maintain an air space between the surface of the stirring motor and the sample container to prevent heating the sample.

4.5 Dissolved gases affecting sample acidity, such as carbon dioxide or ammonia, may be gained or lost during sampling, storage, or titration. Minimize these effects by titrating to the end point promptly after opening the sample container. Purge the sample of CO_2 with a nitrogen stream and maintain a nitrogen atmosphere within the vessel throughout the titration.

4.6 The important assumption in Gran's method is that only strong acids contribute to the free acidity of a solution. The presence of weak acids (formic acid, acetic acid, and the ammonium ion) and hydrolyzable metal salts ($Al(H_2O)_6$) can lead to an overestimate of both the strong and the total acidity when using this technique. In the absence of complete chemical characterization of the wet deposition sample to correct for this overestimation, the usefulness of the data obtained by this method becomes limited (14.4).

5. SAFETY

5.1 The reference buffer solutions, sample types, and most reagents used in this method pose no hazard to the analyst. Use a fume hood, protective clothing, and safety glasses when handling concentrated nitric acid (Sect. 7.6) and sodium hydroxide (Sect. 7.8).

5.2 Follow American Chemical Society guidelines regarding the safe handling of chemicals used in this method (14.5).

6. APPARATUS AND EQUIPMENT

6.1 LABORATORY pH METER -- The meter may have either an analog or digital display but must have a 0.01 pH unit sensitivity. A meter that has separate calibration and slope adjustment features and is electrically shielded to avoid interferences from stray currents or static charge is necessary. It may be powered by battery or 110 VAC; if battery powered, the meter must have a battery check feature. A temperature compensator control to allow accurate measurements at temperatures other than 25°C is desirable.

6.2 SENSING ELECTRODE -- Select a sensing electrode constructed of general purpose glass. This electrode type generates lower resistance, faster response, and has a reliable range of 0-14 pH units. Refer to the manual accompanying the probe for the manufacturer's recommendations on electrode storage.

6.3 REFERENCE ELECTRODE -- Select a reference probe compatible with the sensing electrode used. Refer to the manual accompanying the probe for the manufacturer's recommendations on electrode storage.

6.4 COMBINATION ELECTRODE -- The combination electrode combines the indicating and reference elements in a single unit. Since sample volume requirements are a consideration when analyzing wet deposition samples, combination electrodes are more convenient than separate glass and reference electrodes. Refer to the manual accompanying the probe for the manufacturer's recommendations on electrode storage.

6.5 TEMPERATURE CONTROL -- To ensure accurate results, use either a constant temperature water bath, a temperature compensator, or a thermometer to verify that all standards and samples are maintained at temperatures within ±1°C of one another. If a thermometer is used, select one capable of being read to the nearest 1°C and covering the range 0° to 40°C.

6.6 MICROBURET -- For the addition of titrant, select a microburet or an autoburet assembly. Alternatively, a micropipette capable of reproducibly delivering 5 uL of solution may be used.

6.7 STIRRING DEVICE -- electric or water-driven. If an electric stirrer is selected, leave an air gap or place an insulating pad between the stirrer surface and the solution container to minimize heating of the sample. Use a TFE-fluorocarbon-coated stirring bar.

6.8 TITRATION VESSEL -- Use a borosilicate glass or polyolefin vessel with a 75-mL capacity. Equip the vessel with a lid having openings to accommodate the pH electrode(s), a nitrogen purge line, buret, and exhaust (to prevent pressure build-up as N_2 is pumped into the chamber). A suitable titration vessel is illustrated in Figure 1.

6.9 LABORATORY FACILITIES -- Laboratories used for the analysis of wet deposition samples should be free from external sources of contamination. The use of laminar flow clean air workstations is recommended for sample processing and preparation to avoid the introduction of airborne contaminants. Samples should always be capped or covered prior to analysis. A positive pressure environment within the laboratory is also recommended to minimize the introduction of external sources of contaminant gases and particulates. Windows within the laboratory should be kept closed at all times and sealed if air leaks are apparent. The use of disposable tacky floor mats at the entrance to the laboratory is helpful in reducing the particulate loading within the room.

7. REAGENTS AND CONSUMABLE MATERIALS

7.1 PURITY OF REAGENTS -- Use reagent grade chemicals for all solutions. All reagents shall conform to the specifications of the Committee on Analytical Reagents of the American Chemical Society (ACS) where such specifications are available.

7.2 PURITY OF WATER -- Use carbon dioxide-free water prepared by boiling ASTM Type II water (14.6) in a conical flask for 20 minutes. Stopper the flask with a 1-hole rubber stopper fitted to a soda lime-ascarite drying tube and allow the water to cool. Point of use 0.2 micrometer filters are recommended for all faucets supplying water to prevent the introduction of bacteria and/or ion exchange resins into reagents, standard solutions, and internally formulated quality control check solutions.

7.3 NITROGEN, GAS -- Use pre-purified nitrogen gas (N_2, 99.995%) to purge the sample of carbon dioxide and maintain a N_2 atmosphere above the sample during titration.

7.4 POTASSIUM HYDROGEN PHTHALATE SOLUTION (0.02 N) -- Dissolve 4.00 g of potassium hydrogen phthalate ($KHC_8H_4O_4$), dried at 105°C for one hour, in water (Sect. 7.2) and dilute to 1 L.

7.5 QUALITY CONTROL CHECK SAMPLES (QCS) -- Prepare the following solutions and analyze according to Sect. 11.3-11.4 to verify the titration procedure.

7.5.1 Strong Acid -- Nitric Acid (5.0×10^{-5} N) -- Dilute 1.0 mL of concentrated nitric acid (HNO_3, sp gr 1.42) to 1 L with water (Sect. 7.2). Dilute 3.2 mL of this stock solution to 1 L with water (Sect. 7.2). The resulting solution has a pH of 4.30 ± 0.10 and a total acidity of 50.1 ± 10.0 ueq/L at 25°C. Store at room temperature in a high density polyethylene or polypropylene container.

7.5.2 Mixed Strong/Weak Acid -- Nitric Acid : Acetic Acid (2.5×10^{-5} N : 2.5×10^{-5} N) -- Dilute 1.0 mL of concentrated nitric acid to 1 L with water (Sect. 7.2). Dilute 1.0 mL of concentrated acetic acid ($HC_2H_3O_2$, sp gr 1.05) to 1 L with water (Sect. 7.2). Combine 1.60 mL of HNO_3 solution with 1.45 mL of $HC_2H_3O_2$ solution and dilute to 1 L with water (Sect. 7.2). The resulting solution has a pH of 4.60 ± 0.10 and a total acidity of 50.6 ± 5.0 ueq/L at 25°C. Store at room temperature in a high density polyethylene or polypropylene container.

7.6 REFERENCE BUFFER SOLUTIONS -- Table 1 identifies each buffer salt by its National Bureau of Standard (NBS) number and provides a recommended drying procedure prior to use. Store the reference buffer solutions in polyethylene or chemical-resistant glass bottles and replace yearly or sooner if a visible change such as the development of colloidal or particulate materials is observed.

7.6.1 Phthalate Reference Buffer Solution (0.02 N HCl, 0.05 N $KHC_8H_4O_4$) -- Add 83.0 mL of concentrated hydrochloric acid (HCl, sp gr 1.19) to water (Sect. 7.2) and dilute to 1 L. Dissolve 10.20 g of potassium hydrogen phthalate ($KHC_8H_4O_4$) in 22.3 mL of the hydrochloric acid solution and dilute to 1 L with water (Sect. 7.2). This solution has a pH of 3.00 at 25°C.

7.6.2 Phthalate Reference Buffer Solution (0.05 N $KHC_8H_4O_4$) -- Dissolve 10.12 g of potassium hydrogen phthalate ($KHC_8H_4O_4$) in water (Sect. 7.2) and dilute to 1 L. This solution has a pH of 4.00 at 25°C.

7.6.3 Phosphate Reference Buffer Solution (0.005 N NaOH, 0.05 N KH_2PO_4) -- Dissolve 4.00 g of sodium hydroxide (NaOH) in water (Sect. 7.2) and dilute to 1 L. Dissolve 6.80 g of potassium dihydrogen phosphate (KH_2PO_4) in 56.0 mL of the hydroxide solution and dilute to 1 L with water (Sect. 7.2). This solution has a pH of 6.00 at 25°C.

7.6.4 Phosphate Reference Buffer Solution (0.03 N NaOH, 0.05 N KH_2PO_4) -- Dissolve 40.0 g of sodium hydroxide (NaOH) in water (Sect. 7.2) and dilute to 1 L. Dissolve 6.80 g of potassium dihydrogen phosphate (KH_2PO_4) in 29.1 mL of the hydroxide solution and dilute to 1 L with water (Sect. 7.2). This solution has a pH of 7.00 at 25°C.

7.6.5 Commercial Buffer Solutions -- Commercially available buffer solutions traceable to NBS buffers are adequate for standardization. These buffer solutions have pH values near 3, 4, 6, or 7. The exact pH and use temperature are provided by the supplier of the specific buffer.

7.7 SODIUM HYDROXIDE SOLUTION, TITRANT (0.02 N) -- Use commercially available 0.02 N sodium hydroxide solution or prepare from ACS reagent grade materials. Dissolve 1.0 g of sodium hydroxide (NaOH) in 10 mL of water (Sect. 7.2), cool, and filter through hardened filter paper. Dilute the filtrate to 1 L with water (Sect. 7.2). Standardize with potassium hydrogen phthalate (Sect. 7.5) according to Sect. 9.2. Calculate the normality using the equation in Sect. 12.2. Refrigerate the solution at 4°C in a high density polyethylene or polypropylene container.

8. SAMPLE COLLECTION, PRESERVATION, AND STORAGE

8.1 Collect samples in high density polyethylene (HDPE) containers that have been thoroughly rinsed with ASTM Type II water (7.2). Do not use strong mineral acids or alkaline detergent solutions for cleaning collection vessels. Residual acids may remain in the polyethylene matrix and slowly leach back into the sample. Alkaline detergents may also leave residues that may affect the sample chemistry. Cap collection bottles after cleaning to prevent contamination from airborne contaminants; air dry collection buckets in a laminar flow clean air workstation and wrap in polyethylene bags prior to use. If a laminar flow workstation is not available, pour out any residual rinse water and bag the buckets immediately. Do not dry the bucket interior by any method other than air drying in a laminar flow clean air workstation.

8.2 The frequency of sample collection and the choice of sampler design are dependent on the monitoring objectives. In general, the use of wet-only samplers is recommended to exclude dry deposition contributions, minimize sample contamination, retard evaporation, and enhance sample stability. Sample collection frequency may vary from sequential sampling within a wet deposition event to total event samples. In addition to the replacement of sampling containers at the cessation of each wet deposition event, a routine weekly container change is recommended. This replacement protocol ensures sample integrity which may be compromised by long term container exposure.

8.3 The dissolution of particulate materials and the presence of microbial activity will affect the stability of both the strong and the weak acid components of wet deposition samples (14.7, 14.8). This instability generally results in a decrease in measured acidity. Titrations should be made immediately after sample collection and thermal equilibration with calibration buffers. Refrigeration of samples at 4°C will minimize but not prevent a decrease in the hydrogen ion content.

8.3.1 Filtration of samples through a deionized water leached 0.45 micrometer membrane is effective at stabilizing the acidic components of the wet deposition sample that are influenced by the dissolution of alkaline particulate matter (14.7). Monitoring of the filtration procedure is necessary to ensure that sample acidities are not affected by the membrane or filtration apparatus.

8.3.2 A biocide such as chloroform ($CHCl_3$) may be used to stabilize the organic acid component of the sample and to prevent changes in acid content due to biological actions on other sample constituents (14.8). Add the chloroform (0.5 mL per 250 mL sample) to a separate sample aliquot that will be used only for the determination of strong and total acid components.

9. CALIBRATION AND STANDARDIZATION

9.1 Turn on the meter and allow it to warm up according to manufacturer's instructions.

9.2 If necessary, add filling solution to the electrode before using. Maintain the filling solution level at least one inch above the level of the sample surface to ensure proper electrolyte flow rate.

9.3 Determine the temperature of the wet deposition sample. Allow sample, buffers, and QCS solutions to reach room temperature (±1°C) before using for calibration or titration.

9.4 Select two reference buffer solutions that bracket the anticipated pH of the wet deposition sample. The difference between the nominal pH of each buffer solution should not exceed three units. A pH 7.00 and a pH 4.00 buffer are most frequently used for wet deposition studies.

9.5 CALIBRATION FUNCTION

9.5.1 Rinse the electrode(s) with three changes of water (Sect. 7.2) or with a flowing stream from a wash bottle. Dispense 20-40 mL of the buffer with the higher pH into the titration vessel (Fig. 1). Insert the stirring bar and continue stirring throughout the calibration procedure at a rate of 4 revolutions per second (rps). Maintain a nitrogen atmosphere within the titration chamber during measurement as in Sect. 11.4.1.

9.5.2 Insert the electrode(s) into the buffer and allow time for the reading to remain stable within ±0.01 pH units over a 30 second period.

9.5.3 Adjust the calibration function until the reading corresponds to the temperature corrected value of the reference buffer solution.

9.6 SLOPE FUNCTION

9.6.1 Rinse the electrode(s) with three changes of water (Sect. 7.2) or with a flowing stream from a wash bottle. Dispense 20-40 mL of the second reference buffer solution into the titration vessel. Insert the stirring bar and continue stirring throughout the calibration procedure. Maintain a nitrogen atmosphere within the titration chamber during measurement as in Sect. 11.4.1.

9.6.2 Insert the electrode(s) into the buffer and allow the system to equilibrate as directed in Sect. 9.5.2.

9.6.3 Adjust the slope function until the reading corresponds to the temperature corrected value of the second reference buffer solution.

9.7 CALIBRATION CHECK

9.7.1 Remove the electrode(s), rinse thoroughly, and place into the first reference buffer solution following the procedure in Sect. 9.5. If the pH does not read within ±0.01 units of the temperature corrected value, repeat the calibration procedure until the buffers agree.

9.8 To standardize the NaOH titrant prepared in Sect. 7.8, fill a 25-mL buret with 0.02 N $KHC_8H_4O_4$ (Sect. 7.5). Pipette 20 mL of 0.02 N NaOH into a beaker and immerse a calibrated pH electrode into the solution. Add $KHC_8H_4O_4$ solution to the dilute NaOH in small increments until the pH of the solution reads 8.70. Calculate the normality of the NaOH using the equation provided in Sect. 12.2.

10. QUALITY CONTROL

10.1 Each laboratory using this method should develop formalized quality control protocols to continually monitor the bias and precision of all measurements. These protocols are required to ensure that the measurement system is in a state of statistical control. Estimates of bias and precision for wet deposition analyses cannot be made unless these control procedures are followed. Detailed guidelines for the development of quality assurance and quality control protocols for wet deposition measurement systems are published in a manual available from the United States Environmental Protection Agency, Research Triangle Park, NC 27711 (14.9). Included in this manual are procedures for the development of statistical control charts for use in monitoring bias and precision as well as

recommendations for the introduction of reagent blanks, laboratory duplicates, field duplicates, spike samples, and performance evaluation samples. These guidelines are to be used by all laboratories involved with wet deposition measurements.

10.2 ESTABLISHMENT OF WARNING AND CONTROL LIMITS -- Warning and control limits are used to monitor the analyses of quality control check samples (QCS).

10.2.1 Quality Control Check Samples (QCS) -- Calculate warning and control limits for QCS solutions from a minimum of ten analyses performed on ten days to provide a realistic estimate of the method variability. Calculate a standard deviation (s) for the measured acidity of each QCS titrated. Use the certified or NBS traceable acidity as the mean (target) value ($\bar{x}$). A warning limit of $\bar{x} \pm 2s$ and a control limit of $\bar{x} \pm 3s$ should be used. Constant positive or negative measurements with respect to the true value are indicative of a method or procedural bias. If the measured acidity found by titration of the QCS solution falls outside of the $\pm 3s$ limits, recalibrate the system and reanalyze all samples from the last time the system was in control. If two successive QCS acidity measurements are outside of the $\pm 2s$ limits, verify the meter calibration according to Sect. 10.5 before continuing with titrations. The standard deviations used to generate the QCS control limits should be comparable to the single operator precision reported in Table 2. Reestablish new warning and control limits whenever instrumental operating conditions are varied or QCS concentrations are changed.

10.2.2 All warning and control limits should be reevaluated on a continual basis as additional data are collected during routine analyses. The limits should be broadened or narrowed if a recalculated standard deviation under similar operating conditions provides a different estimate of the procedure variability.

10.3 Monitor the cleaning procedure by pouring a volume of water (Sect. 7.2) that approximates the median sample size into the collection vessel. Allow the water to remain in the sealed or capped collection container for at least 24 hours and determine the solution pH. If the measured pH is not within the range of 5.4-6.0, a contamination problem is indicated in the cleaning procedure. Corrective action should be taken before the sampling containers are used for the collection of wet deposition.

10.4 Electrodes used for the measurement of wet deposition samples should not be used for other sample types. Strongly acidic or basic solutions may cause electrode degradation and result in biased measurements and/or slow response in wet deposition samples. Similarly, samples characterized by high concentrations of organic matter may leave a residue on the glass sensing bulb resulting in slow electrode response.

10.5 Verify the meter calibration after every ten samples and at the end of each day's analyses using both reference buffer solutions. The pH measured for the calibration buffers must agree within ±0.02 of the nominal value reported for each buffer. If the measured pH of either buffer falls outside of these limits, recalibrate the electrode/meter assembly and reanalyze those samples measured since the last time the system was in control.

10.6 Determine the pH and titrated acidity of a quality control check sample (QCS) after the meter and electrode assembly have been calibrated. This sample may be formulated in the laboratory or obtained from the National Bureau of Standards (NBS Standard Reference Material 2694, Simulated Rainwater). Verify the accuracy of internally formulated QCS solutions with an NBS traceable standard before acceptance as a quality control check. The check sample selected must have a pH within the range of the calibration buffers and should approximate the acidity range of the samples to be analyzed. The use of two QCS samples, one a dilute strong acid solution and the other a dilute equimolar mixture of a strong and a weak acid, is recommended. If the measured acidity found by titration of the QCS is not within the specified limits of the control solution, recheck the meter calibration and recalibrate if necessary. Titrate a second aliquot. If acceptable results on the second aliquot cannot be obtained, systematically replace titrant, electrode, and then the meter. Titrate a separate aliquot of QCS after each change to determine if the problem was corrected. When the system is in control, titrate the QCS solutions as directed in Sect. 11. Plot the data obtained from the QCS checks on a control chart for routine assessments of bias and precision.

10.6.1 The pH and titrated acidity of the QCS should be measured at the start and completion of each batch of samples. If the QCS measurement is out of the predetermined control limits, check the calibration buffers and recalibrate if any one of the buffer values has shifted by more than 0.02 pH units. Recheck the QCS and reanalyze all samples from the last time the measurement system was in control.

10.7 Submit a Field Blank (FB) to the laboratory for every 20 samples. The FB may consist of a water sample (Sect. 7.2) or a known reference solution that approximates the concentration levels characteristic of wet deposition. The FB is poured into the sampling vessel at the field site and undergoes identical processing and analytical protocols as the wet deposition sample(s). Use the analytical data obtained from the FB to determine any contamination introduced in the field and laboratory handling procedures. The data from the known reference solution can be used to calculate a system precision and bias.

10.8 Participation in performance evaluation studies is recommended for wet deposition chemistry laboratories. The samples used for these performance audits should contain the analytes of interest at concentrations within the normal working range of the method. The true values are unknown to the analyst. Performance evaluation studies for wet deposition chemistry laboratories are conducted semiannually by the USEPA Performance Evaluation Branch, Quality Assurance Division, Research Triangle Park, NC 27711.

11. PROCEDURE

11.1 Bring all buffers and solutions to ambient temperature making sure any necessary compensation is made for deviations in temperature (Sect. 6.5).

11.2 Calibrate the electrode assembly with two reference buffer solutions as described in Sect. 9.1-7.

11.3 After the electrode(s) and meter are calibrated, titrate the QCS according to Sect. 11.4. If the pH and acidity measured for the QCS is not within the specified limits (Sect. 10.2.1), refer to Sect. 10.6.

11.4 SAMPLE ANALYSIS

11.4.1 Rinse the electrode(s) with three changes of water (Sect. 7.2) or with a flowing stream from a wash bottle. Pipette 20-40 mL of sample into the titration vessel. Record the volume of sample used and begin stirring the sample. Record the pH after the meter has stabilized to within ± 0.01 units. Sparge the sample with N_2 for 10-15 minutes to remove dissolved CO_2. Raise the N_2 line to rest above the level of the solution to maintain a nitrogen atmosphere of ≤ 5 psi (3.5 g/m^2) within the titration chamber.

11.4.2 Record the pH of the sample after sparging. The difference in pH before and after sparging is a measure of the volatile weak acidity present. Carbon dioxide is the predominant volatile weak acid found in wet deposition samples. The contribution of dissolved CO_2 to lowering pH is generally negligible below pH 4.50. Add the 0.02 N NaOH titrant to the sample in increments of 1-10 uL. Determine the size of the increment of titrant added by the change in pH that results from each addition. When the change in pH is very small (<0.01), increase the volume of titrant added to 10 uL. Record both the volume of titrant added and the pH once the meter has become stable. Continue titrating the sample until a pH of approximately 10.4 is reached, recording pH and volume after each titrant addition.

11.4.3 Stir the sample throughout the titration. Rinse the titration assembly and vessel between each titration with at least three changes of water (Sect. 7.2) or with a flowing stream from a wash bottle for a minimum of 30 seconds.

11.5 To perform the Gran's analysis on the results of the titration, refer to Sect. 12.3.

12. CALCULATIONS

12.1 Record pH measurements to the nearest hundredth of a pH unit and sample temperature to the nearest degree.

12.2 Calculate the normality (N) of the solutions standardized according to Sect. 9.9 as follows:

$$N = \frac{A \times B}{EW \times C} = \frac{4.0 \times B}{204.2 \times C} \quad eq/L$$

where: A = amount of $KHC_8H_4O_4$ in grams weighed into 1 L.
B = volume of $KHC_8H_4O_4$ used in titration in mL.
EW = equivalent weight of $KHC_8H_4O_4$ (204.2).
C = volume of NaOH titrated in mL.

12.3 To calculate total and strong acidity, a Gran's plot can be constructed using the volume and pH data from the titration. Calculate the Gran function for each point as follows (14.10):

$$\psi = (V_0 + V_T)10^{-pH_T}$$

$$\psi' = (V_0 + V_T)10^{pH_T}$$

where: ψ = Gran function before the equivalence point is reached
ψ' = Gran function after the equivalence point is reached
V_0 = initial volume of sample in mL
V_T = volume of titrant added in mL
pH_T = pH from meter corresponding to V_T

Plot the Gran function versus the volume of titrant (V_T). The curves ψ and ψ' vs. V_T are linear and intersect the V_T axis at V_E and V'_E, respectively. If significant weak acidity is present, the ψ function will be altered by the dissociation of the weak acids. This produces nonlinearity in the curve ψ vs. V_T. The linear portion of the curve can be extrapolated to obtain the equivalence point V_E for strong acidity. The intersection of the V_T axis of ψ' vs. V_T is the equivalence point for total acidity. See Figures 2 and 3.

$$\text{Strong acidity} = 10^{-6} C_B (V_E/V_0) \quad \text{ueq } H^+/L$$

$$\text{Total acidity} = 10^{-6} C_B (V'_E/V_0) \quad \text{ueq } H^+/L$$

where: C_B = Normality of titrant
V_E = volume of titrant added at the equivalence point in mL (strong acidity)
V'_E = volume of titrant added at the equivalence point in mL (total acidity)
V_0 = initial volume of sample in mL

The concentration of weak acid is obtained from the following relationship:

Weak Acidity = Total Acidity - Strong Acidity

13. PRECISION AND BIAS

13.1 Single-operator precision and bias data were obtained using two quality control check samples. The results are tabulated in Table 2.

14. REFERENCES

14.1 Gran, G., "Determination of the Equivalent Point in Potentiometric Titrations," Acta Chemica Scandinavica, 4, 1950, p. 559.

14.2 Annual Book of ASTM Standards, Part 31, "Definitions of Terms Relating to Water," Standard D 1129-82b, 1982, pp. 3-5.

14.3 Annual Book of ASTM Standards, Part 31, "Excerpts from Standard for Metric Practice," Standard E 380-79, 1982, pp. 679-694.

14.4 Keene, W. C. and Galloway, J. N., "Gran's Titrations: Inherent Errors in Measuring the Acidity of Precipitation," Atmos. Environ. 19, 1985, pp. 199-202.

14.5 "Safety in Academic Chemistry Laboratories," American Chemical Society Publication, Committee on Chemical Safety, 3rd Edition, 1979.

14.6 Annual Book of ASTM Standards, Part 31, "Standard Specification for Reagent Water," Standard D 1193-77, 1982, p. 39.

14.7 Peden, M. E. and Skowron, L. M., "Ionic Stability of Precipitation Samples," Atmos. Environ. 12, 1978, pp. 2343-2349.

14.8 Keene, W. C. and Galloway, J. N., "Organic Acidity in Precipitation of North America," Atmos. Environ. 18, 1984, pp. 2491-2497.

14.9 Topol, L. E., Lev-On, M., Flanagan, J., Schwall, R. J., Jackson, A. E., Quality Assurance Manual for Precipitation Measurement Systems, 1985 U.S. Environmental Protection Agency, Environmental Monitoring Systems Laboratory, Research Triangle Park, NC 27711.

14.10 McQuaker, N. R., Kluckner, P. D. and Sandberg, D. K., "Chemical Analysis of Acid Precipitation: pH and Acidity Determinations," Environ. Sci. & Tech., 17, 1983, pp. 431-435.

Table 1. National Bureau of Standards (NBS) Salts for Reference Buffer Solutions.

NBS Standard Sample Designation	Buffer Salt	Drying Procedure
186-1-c	potassium dihydrogen phosphate	2 h in oven at 130°C
185-f	potassium hydrogen phthalate	2 h in oven at 110°C

The buffer salts listed above can be purchased from the Office of Standard Reference Materials, National Bureau of Standards, Washington, D. C. 20234.

Table 2. Single-Operator Bias and Precision from Acidity Titrations of Quality Control Check Samples.

Theoretical Total Acidity, ueq/L	Mean Measured Total Acidity, ueq/L	n[a]	Bias, ueq/L	Bias, %	Precision, s, ueq/L	Precision, RSD, %
50.1	50.1	10	0	0	1.8	3.6
50.5	47.8	7	-2.7	-5.4	2.4	5.0

The solutions used were a 5.01×10^{-5} N nitric acid solution (pH = 4.30) and a 5.05×10^{-5} N equimolar mixture of nitric acid and acetic acid (pH = 4.60).

a. Number of replicates

Figure 1. Sample Vessel Used for an Acidity Titration.

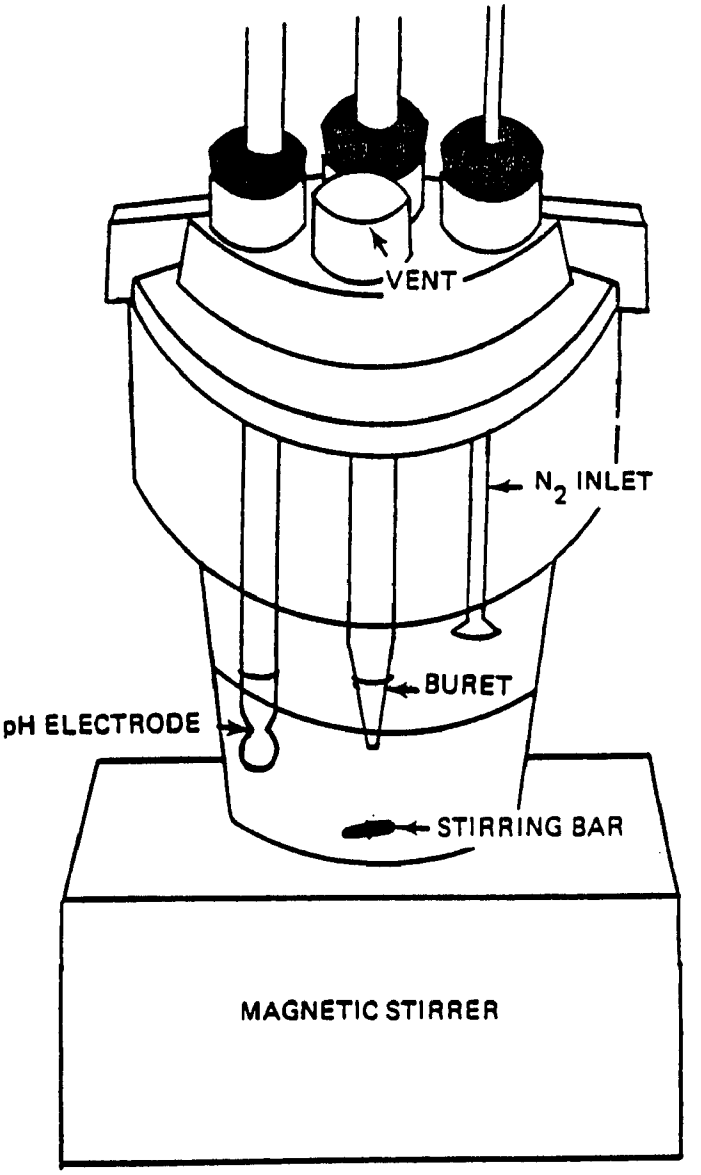

Figure 2. A Standard Titration Curve with Gran's Plot for an Equimolar Mixture of Dilute Nitric Acid and Acetic Acid.

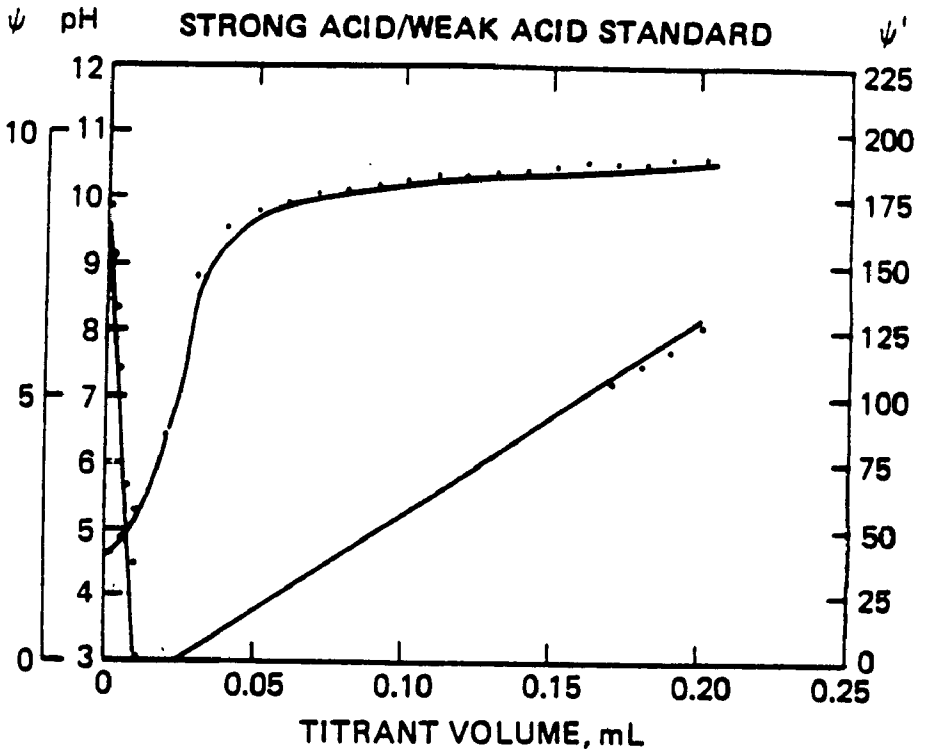

Calculated Acidities

strong acidity = 25.3 μeq/L (pH = 4.60) = 50.1%
total acidity = 50.6 μeq/L = 100%
weak acidity = 25.2 μeq/L = 49.9%

Measured Acidities

mean strong acidity = 22.9 (±1.6) μeq/L (pH 4.64) = 47.9%
mean total acidity = 47.8 (±2.3) μeq/L
weak acidity = 24.9 μeq/L = 52.1%

Figure 3. A Standard Titration Curve with Gran's Plot for a Dilute Nitric Acid Solution.

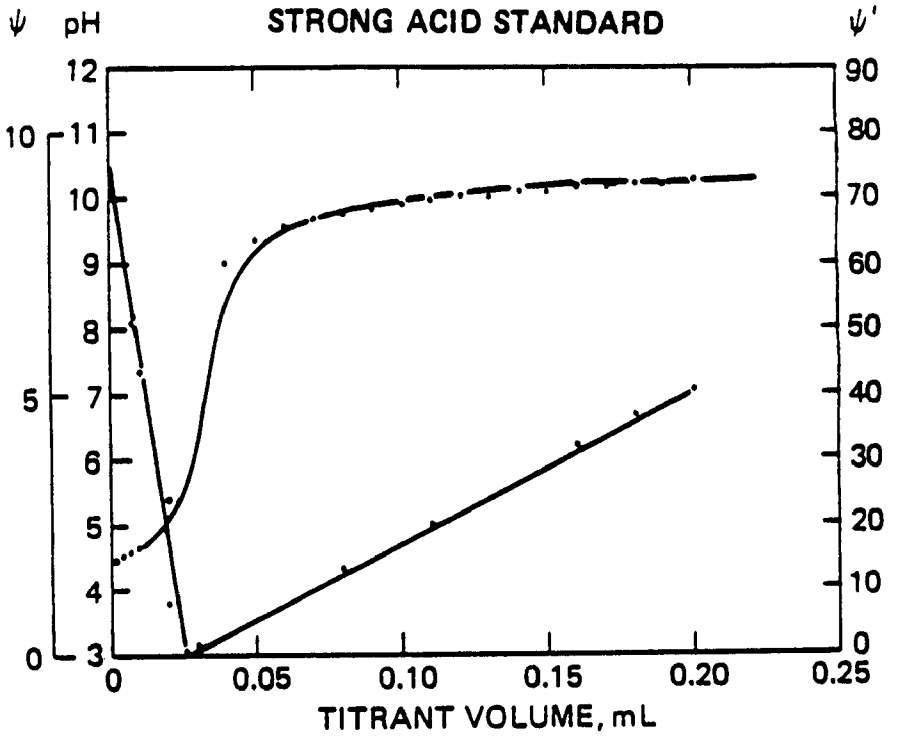

Calculated Acidity
strong acidity = 50.4 μeq/L (pH 4.30) = 100%
Measured Acidities
mean strong acidity = 51.1 (±3.5) μeq/L (pH 4.29) = 99%
mean total acidity = 51.6 (±3.6) μeq/L
weak acidity = 0.5 μeq/L = 1%

Method 305.2 -- Acidity (Titrimetric)

December 1982

United States Environmental Protection Agency
Office of Research and Development
Environmental Monitoring and Support Laboratory
Cincinnati, Ohio 45268

1. SCOPE AND APPLICATION

1.1 This method is applicable to rain, surface and other waters of pH less than 8.3.

1.2 This method is a measure of the concentration of strong and weak acids that react with hydroxyl ions. This includes the dissolved gases that are present.

1.3 The range of this method depends on the volume of sample titrated and upon the precision that the increments of titrant can be measured. If only 10 ml of sample is available for analysis, it is necessary to use a 50 uL syringe for dispensing the titrant in order to achieve a precision of less than 10 ueq/L.

2. SUMMARY OF METHOD

2.1 Samples are titrated with 0.02 N carbonate-free NaOH solution. The end point is determined with a pH meter. Results are reported as microequivalents (ueq) per liter.

3. SAMPLING HANDLING AND STORAGE

3.1 The sample container must be filled completely, sealed and stored at 4°C. Care must be taken to minimize exposure of the sample to the atmosphere. Open the sample container immediately before analysis.

3.2 Analysis should be performed as soon as possible after collection.

4. COMMENTS

4.1 Samples with an initial pH between 4.3 and 8.3 are subject to error due to the loss or gain of dissolved gases during sampling, storage and analyses.

5. APPARATUS

5.1 pH meter and electrode(s), see Method 150.1 or 150.2.

5.2 Microburet or microsyringe.

5.3 Teflon or glass magnetic stirring bar.

5.4 Magnetic stirrer.

5.5 Beakers or flasks.

6. REAGENTS

6.1 Standard sodium hydroxide solution, 1 N: Dissolve 40g NaOH in 250 mL distilled water. Cool and dilute to 1 liter with CO_2-free distilled water. Store in a polyolefin bottle and fitted with a soda lime tube or tight cap to protect from atmospheric CO_2.

6.2 Standard sodium hydroxide titrant, 0.02 N: Dilute 20.0 mL of 1 N NaOH with CO_2-free distilled water to 1 liter. Store in rubber stoppered bottle. Protect from atmospheric CO_2 by using a soda lime tube. Standardize against an 0.02 N potassium acid phthalate solution prepared by dissolving 4.085 g of anhydrous $KHC_8H_4O_4$ in CO_2-free distilled water and diluted to 1:1.

7. PROCEDURE

7.1 Pipet an appropriate aliquot of sample into beaker or flask containing a small Teflon on glass stirring bar. Use extreme care to minimize the sample surface disturbance.

7.2 Immerse pH electrode(s) into sample and stir at a rate that does not cause sample surface disturbance.

7.3 Titrate with 0.02 N NaOH (6.2) to pH 8.3. Titration should be made as quickly as possible to prevent absorption of atmospheric CO_2. Record volume of titrant.

8. CALCULATION

8.1 Acidity, $\text{ueq/L} = \frac{mL_B}{mL_S} \times N_B \times 10^5$

ueq/L = microequivalents per liter

mL_B = mL of NaOH titrant

mL_S = mL of sample

N_B = normality of titrant

9. PRECISION AND ACCURACY

9.1 Precision and accuracy data are not available.

10. REFERENCES

1. Seymour, M.D., S.A. Schubert, J.W. Clayton, Q. Fernando, "Variation in the Acid Content of Rain Water in the Course of a Single Precipitation," Water, Air and Soil Pollution, 10, 1978, pp. 147-161.

2. Peden, M.E. and L. Skowron, "Ionic Stability of Precipitation Samples," Atmosph. Environ. 12, 1978, pp. 2343-2349.

3. USGS, "Methods for Collection and Analysis of Water Samples for Dissolved Minerals and Gases," 1970, p. 39.

4. Annual Book of ASTM Standards, part 31, "Water," 1978, D1067, p. 107.

5. Standard Methods for the Examination of Water and Wastewater, 14th Edition, 1975, Method 402, p. 273.

Appendix F

METHOD 300.6 -- CHLORIDE, ORTHOPHOSPHATE, NITRATE AND SULFATE IN WET DEPOSITION BY CHEMICALLY SUPPRESSED ION CHROMATOGRAPHY

METHOD 300.7 -- DISSOLVED SODIUM, AMMONIUM, POTASSIUM, MAGNESIUM, AND CALCIUM IN WET DEPOSITION BY CHEMICALLY SUPPRESSED ION CHROMATOGRAPHY

Method 300.6 -- Chloride, Orthophosphate, Nitrate and Sulfate in Wet Deposition by Chemically Suppressed Ion Chromatography

March 1986

Performing Laboratory:

Susan R. Bachman
Carla Jo Brennan
Jane E. Rothert
Mark E. Peden

Illinois State Water Survey
Analytical Chemistry Unit
2204 Griffith Drive
Champaign, Illinois 61820

Sponsoring Agency:

John D. Pfaff, Project Officer

Inorganic Analysis Section
Physical and Chemical Methods Branch
United States Environmental Protection Agency
Office of Research and Development
Environmental Monitoring and Support Laboratory
Cincinnati, Ohio 45268

INDEX

Section Number	Subject
1	Scope and Application
2	Summary of Method
3	Definitions
4	Interferences
5	Safety
6	Apparatus and Equipment
7	Reagents and Consumable Materials
8	Sample Collection, Preservation, and Storage
9	Calibration and Standardization
10	Quality Control
11	Procedure
12	Calculations
13	Precision and Bias
14	References

TABLES

1. Method Detection Limits and Concentration Ranges for the Determination of Anions in Wet Deposition.
2. Compatibility of Separator and Suppressor Columns with Suggested Regeneration and Eluent Solutions for the Analysis of Wet Deposition.
3. Retention Times and Suggested Calibration Standard Concentrations for the Determination of Anions in Wet Deposition Samples.
4. Single-Operator Precision and Bias for Chloride, Orthophosphate, Nitrate, and Sulfate Determined from Analyte Spikes of Wet Deposition Samples.
5. Single-Operator Precision and Bias for Chloride, Orthophosphate, Nitrate, and Sulfate Determined from Quality Control Check Samples.

FIGURES

1. Percentile Concentration Values Obtained from Wet Deposition Samples.
2. Chromatogram of a Wet Deposition Sample Containing Chloride, Orthophosphate, Nitrate, and Sulfate, (a) Without and (b) With Eluent Matching.

1. SCOPE AND APPLICATION

1.1 This method is applicable to the determination of chloride, orthophosphate, nitrate, and sulfate in wet deposition by chemically suppressed ion chromatography.

1.2 The term "wet deposition" is used in this method to designate rain, snow, dew, sleet, and hail.

1.3 The method detection limits (MDL) for the above analytes were determined from replicate analyses of calibration solutions containing 0.05 mg/L of each analyte. The measured MDL's for chloride, nitrate, and sulfate are 0.03 mg/L as Cl^-, NO_3^-, and SO_4^{-2}. The MDL for orthophosphate is 0.02 mg/L as PO_4^{-3}. The analyte concentration range of this method is outlined in Table 1.

1.4 Figure 1 represents cumulative frequency percentile concentration plots of chloride, nitrate, orthophosphate, and sulfate obtained from analyses of over five thousand wet deposition samples. These data may be used as an aid in the selection of appropriate calibration standard concentrations.

2. SUMMARY OF METHOD

2.1 Ion chromatography combines conductimetric detection with the separation capabilities of ion exchange resins. A filtered aliquot of sample, ranging in size from 100 to 250 uL, is pumped through an ion exchange column where the anions of interest are separated. Each ion's affinity for the exchange sites, known as its selectivity quotient, is largely determined by its radius and valence. Because different ions have different migration rates, the sample ions elute from the column as discrete bands. Each ion is identified by its retention time within the exchange column. The sample ions are selectively eluted off the separator column and onto a suppressor column. The eluent ions are neutralized and the sample ions are converted to their corresponding strong acids which are detected in a conductance cell. The chromatograms produced are displayed on a strip chart recorder or other data acquisition device for measurement of peak height or area. The ion chromatograph is calibrated with standard solutions containing known concentrations of the anion(s) of interest. Calibration curves are constructed from which the concentration of each analyte in the unknown sample is determined.

3. DEFINITIONS

3.1 ION EXCHANGE -- a reversible process by which ions are interchanged between an insoluble material and a liquid with no substantial structural changes of the material (14.1).

3.2 ELUENT -- the ionic liquid mobile phase used to transport the sample through the exchange columns.

3.3 REGENERANT -- a solution that converts and maintains an active form of the suppressor.

3.4 RESOLUTION -- the ability of a column to separate constituents under specified test conditions. Peak resolution is a function of column efficiency, selectivity, and capacity.

3.5 RETENTION TIME -- the interval measured from the point of sample injection to the point of maximum peak height or area.

3.6 For definitions of other terms used in this method, refer to the glossary. For an explanation of the metric system including units, symbols, and conversion factors see American Society for Testing and Materials (ASTM) Standard E 380, "Metric Practices" (14.2).

4. INTERFERENCES

4.1 Unresolved peaks will result when the concentration of one of the sample components is 10 to 20 times higher than another component that appears in the chromatogram as an adjacent peak. Decreasing the eluent concentration or the flow rate may correct this problem.

4.2 Interferences can be caused by ions with retention times that are similar to and thus overlap those of the anion of interest. This type of positive interference is rare in wet deposition samples. If this interference occurs, decreasing the eluent concentration or the flow rate may result in improved peak resolution.

4.3 Water from the sample injection will cause a negative peak or dip in the chromatogram when it elutes because its conductance is less than that of the suppressed eluent. Any ion of interest eluting near the water dip must be sufficiently resolved from the dip to be accurately quantified. This can be achieved by changing the eluent concentration or decreasing the flow rate. Alternatively, the negative peak can be reduced by adding an equivalent of 100 uL of a prepared eluent concentrate (solution that is 100 times more concentrated than the eluent used for analysis) per 10.0 mL of sample. Proportionate eluent additions must also be included in calibration and quality control solutions.

4.4 Deterioration in column performance can result from the buildup of contaminants on the exchange resin. Losses in retention and resolution are symptoms of column deterioration. Refer to the manufacturer's guidelines for instructions on cleaning the column resin.

4.5 The presence of air bubbles in the columns, tubing, or conductivity detector cell will cause baseline and peak variability. Avoid introducing air into the system when injecting samples and standards. Using degassed eluents and regenerants will help to minimize the introduction of air.

5. SAFETY

5.1 The calibration standards, sample types, and most reagents used in this method pose no hazard to the analyst. Use a fume hood, protective clothing, and safety glasses when handling concentrated sulfuric acid (Sect. 7.4).

5.2 Keep the doors of the instrument column compartment closed at all times when pumps and columns are in use to prevent injury to the operator from column explosion if the pump pressure or column backpressure increases.

5.3 Follow American Chemical Society guidelines regarding the safe handling of chemicals used in this method (14.3).

6. APPARATUS AND EQUIPMENT

6.1 ION CHROMATOGRAPH -- Select an instrument equipped with an injection valve, sample loop, a sampling system, analytical columns, compressed gas, pumps, detector, and strip chart recorder or other data acquisition device. All tubing that comes in contact with samples and standards must be manufactured from inert material such as polyethylene or tetrafluoroethylene (TFE). Refer to Table 2 for details on column compatibility.

6.1.1 Anion Guard Column -- Place before the separator column. This contains the same resin as the separator column and is used to protect the ion exchange column from being fouled by particulates or organic constituents. Using an anion guard column will prolong the life of the separator column (4 x 50 mm, Dionex P/N 030986, AG3, or equivalent).

6.1.2 Anion Separator Column -- This is a column packed with a pellicular low-capacity anion exchange resin constructed of polystyrene-divinylbenzene beads coated with ammonium active sites (4 x 250 mm, Dionex P/N 030985, AS3, or equivalent).

6.1.3 Anion Suppressor Column -- Place after the separator column. This may be in the form of a packed bed, fiber or micro-membrane suppressor. The first type of suppressor is packed with a high-capacity anion exchange resin in the protonated form capable of converting the eluent to a low or negligible background conductance and converting the sample anions to their corresponding strong acids (Dionex P/N 030828, ASC2, or equivalent). The second two types of suppressors utilize a semipermeable membrane containing anion exchange sites to suppress eluent conductance. Both the fiber and micro-membrane suppressors are under continuous regeneration. (Dionex P/N 35350, AFS, fiber; Dionex P/N 38019, AMMS, micro-membrane, or equivalent).

6.1.4 Compressed Gas (Nitrogen or Air) -- Use ultra-high purity, 99.999% (v/v) compressed gas conforming to the recommendations of the manufacturer of the ion chromatograph.

6.1.5 Detector -- Select a flow-through, temperature-compensated, electrical conductance cell with a volume of approximately 6 uL coupled with a meter capable of reading from 0 to 1000 uS/cm on an analog or digital scale.

6.1.6 Pump -- Use a pump capable both of delivering an accurate flow rate and of tolerating the optimal pressure as suggested by the instruction manual accompanying the ion chromatograph and columns selected. A constant pressure, constant flow pump is recommended for enhanced baseline stability. All interior pump surfaces that will be in contact with samples and standards should be manufactured from inert materials.

6.1.7 Recorder -- This should be compatible with the maximum conductance detector output with a full-scale response time of 0.5 sec or less.

6.1.8 Sample Loop -- Select a sample loop compatible with the column system having a capacity of 100-250 uL.

6.1.9 Sampling System -- Select one of the following for sampling.

6.1.9.1 Syringe -- Use a syringe equipped with a male fitting with a minimum capacity of 2 mL.

6.1.9.2 Autosampler -- Use an autosampling system capable of precise delivery, equipped with a dust cover to prevent airborne contamination.

6.2 ELUENT AND REGENERANT RESERVOIRS -- Select containers with a 4-20 L capacity that are designed to minimize introduction of air into the flow system. The regenerant reservoirs may be pressurized with nitrogen or air (5-10 psi) to ensure constant delivery to the suppressor column.

6.3 INTEGRATOR (optional) -- Select an instrument compatible with the detector output to quantitate the peak height or area. A system such as the Spectra Physics 4270 Integrator or a personal computer with a chromatographic software package such as furnished by Nelson Analytical, may be used to provide a direct readout of the concentration of the analyte of interest. If an integrator is used, the maximum peak height or area measurement must be within the linear range of the integrator.

6.4 LABORATORY FACILITIES -- Laboratories used for the analysis of wet deposition samples should be free from external sources of contamination. The use of laminar flow clean air workstations is recommended for sample processing and preparation to avoid the introduction of airborne contaminants. Samples should always be capped or covered prior to analysis. A positive pressure environment within the laboratory is also recommended to minimize the introduction of external sources of contaminant gases and particulates. Room temperature fluctuations should be controlled to within $\pm 3^{\circ}C$ to prevent baseline drift and changes in detector response. Windows within the laboratory should be kept closed at all times and sealed if air leaks are apparent. The use of disposable tacky floor mats at the entrance to the laboratory is helpful in reducing the particulate loading within the room.

7. REAGENTS AND CONSUMABLE MATERIALS

7.1 PURITY OF REAGENTS -- Use reagent grade chemicals for all solutions. All reagents shall conform to the specifications of the Committee on Analytical Reagents of the American Chemical Society (ACS) where such specifications are available.

7.2 PURITY OF WATER -- Use water conforming to ASTM Specification D 1193, Type II (14.4). Point of use 0.2 micrometer filters are recommended for all faucets supplying water to prevent the introduction of bacteria and/or ion exchange resins into reagents, standard solutions, and internally formulated quality control check solutions. Degas the water prior to use by placing in a glass container, agitating vigorously, and aspirating off the liberated gases.

7.3 ELUENT SOLUTION -- Sodium bicarbonate 0.0056 N, sodium carbonate 0.0044 N (eluent strength recommended for wet deposition analysis using an AS3 or AS4 separator column). Dissolve 0.941 g sodium bicarbonate ($NaHCO_3$) and 0.933 g of sodium carbonate (Na_2CO_3) in water (Sect. 7.2) and dilute to 4 L. Mix the solution well and degas before use. Refer to Table 2 for a list of suitable eluent solutions for other separator columns.

7.4 REGENERATION SOLUTION -- Dilute concentrated sulfuric acid (H_2SO_4, sp gr 1.84) to one of the following concentrations for use with packed bed, fiber, or micro-membrane suppressors.

7.4.1 Sulfuric Acid (1.0 N) -- (regenerant for a packed bed column) Add 111 mL of concentrated H_2SO_4 to 2 L of water (Sect. 7.2) and dilute to 4 L.

7.4.2 Sulfuric Acid (0.025 N) -- (regenerant for a fiber suppressor) Add 2.8 mL of concentrated H_2SO_4 to 2 L of water (Sect. 7.2) and dilute to 4 L.

7.4.3 Sulfuric Acid (0.018 N) -- (regenerant for a micro-membrane suppressor) Add 2.0 mL of concentrated H_2SO_4 to 2 L of water (Sect. 7.2) and dilute to 4 L.

7.5 STOCK STANDARD SOLUTIONS -- Stock standard solutions may be purchased as certified solutions or prepared from ACS reagent grade materials as listed below. Store the solutions at room temperature in high density polyethylene or polypropylene containers.

7.5.1 Chloride Solution, Stock (1.0 mL = 1.0 mg Cl) -- Dissolve 1.6484 g of sodium chloride (NaCl), dried at 105°C for one hour, in water (Sect. 7.2) and dilute to 1 L.

7.5.2 Nitrate Solution, Stock (1.0 mL = 1.0 mg NO_3)-- Dissolve 1.3707 g sodium nitrate ($NaNO_3$) in water (Sect. 7.2) and dilute to 1 L.

7.5.3 Orthophosphate Solution, Stock (1.0 mL = 1.0 mg PO_4) -- Dissolve 1.4328 g anhydrous potassium phosphate (KH_2PO_4) in water (Sect. 7.2) and dilute to 1 L.

7.5.4 Sulfate Solution, Stock (1.0 mL = 1.0 mg SO_4) -- Dissolve 1.8142 g anhydrous potassium sulfate (K_2SO_4) in water (Sect. 7.2) and dilute to 1 L.

7.6 SAMPLE CONTAINERS -- Use polyolefin or glass sample cups that have been rinsed thoroughly with water (Sect. 7.2) before use.

8. SAMPLE COLLECTION, PRESERVATION AND STORAGE

8.1 Collect samples in high density polyethylene (HDPE) containers that have been thoroughly rinsed with ASTM Type II water (7.2). Do not use strong mineral acids or alkaline detergent solutions for cleaning collection vessels. Residual acids may remain in the polyethylene matrix and slowly leach back into the sample. Alkaline detergents may also leave residues that may affect the sample chemistry. Cap collection bottles after cleaning to prevent contamination from airborne contaminants; air dry collection buckets in a laminar flow clean air workstation and wrap in polyethylene bags prior to use. If a laminar flow workstation is not available, pour out any residual rinse water and bag the buckets immediately. Do not dry the bucket interior by any method other than air drying in a laminar flow clean air workstation.

8.2 The frequency of sample collection and the choice of sampler design are dependent on the monitoring objectives. In general, the use of wet-only samplers is recommended to exclude dry deposition contributions, minimize sample contamination, retard evaporation, and enhance sample stability. Sample collection frequency may vary from subevent to monthly sampling periods. Collection periods of more than one week are not recommended since sample integrity may be compromised by longer exposure periods.

8.3 Chloride is the only anion in this method that is stable in solution (14.5). Nitrate and orthophosphate concentrations are affected by biological activity within wet deposition samples. The oxidation of nitrite and sulfite after sample collection will result in increased concentrations of nitrate and sulfate, respectively. Sample measurements for sulfate, nitrate, and orthophosphate ions should be made immediately after collection if possible. Refrigeration of samples at 4°C will minimize, but not eliminate, concentration changes prior to chemical analysis (14.5).

8.3.1 Filtration of samples through a 0.45 micrometer membrane leached with water (Sect. 7.2) is partially effective at stabilizing nitrate and orthophosphate by removal of biologically active species. Refrigeration after immediate filtration is the most reliable method to ensure sample integrity for these two parameters. Sample storage time should not exceed one week. Chloride and sulfate determinations should be made within two weeks of sample collection.

9. CALIBRATION AND STANDARDIZATION

9.1 Assemble the ion chromatograph according to the manufacturer's instructions. Recommended operating conditions for the apparatus are listed in Table 1. Included in Table 3 are retention times characteristic of this method. Other columns, chromatographic conditions, or detectors may be used provided the requirements detailed in Sect. 6 are met.

9.2 Bring all standards, samples, eluents, and regenerants to ambient temperature before beginning any analyses. Maintain laboratory temperature conditions within ±3°C while conducting analyses.

9.3 Use the eluent strength in Sect. 7.3 for wet deposition analyses. If peak resolution is not adequate, it may be necessary to decrease the eluent strength. Refer to the manufacturer's recommendations for guidelines on optimizing eluent strength.

9.4 Adjust the instrument flow rate for optimal peak resolution. Decreasing the flow rate may provide improved peak resolution but will lengthen retention times. Increasing the flow rate decreases peak resolution and shortens retention times. Refer to the manufacturer's recommendations for guidelines on optimizing flow rate.

9.5 Equilibrate the system by pumping eluent through all the columns and the detector until a stable baseline is obtained.

9.6 CALIBRATION SOLUTIONS

9.6.1 Five calibration solutions and one zero standard are needed to generate a suitable calibration curve. The lowest calibration solution should contain the analyte(s) of interest at a concentration greater than or equal to the method detection limit. The highest solution should approach the expected upper limit of concentration of the analyte in wet deposition. Prepare the remaining solutions such that they are evenly distributed throughout the concentration range. If a second detector sensitivity scale setting is used to increase the instrument's concentration range, calibrate at the two sensitivity levels. Suggested calibration standards for each analyte are listed in Table 3.

9.6.2 Prepare all calibration standards by diluting the stock standards (Sect. 7.5). Use glass (Class A) or plastic pipettes that are within the bias and precision tolerances specified by the manufacturer. Standards with a concentration greater than 0.10 mg/L of each anion are stable for one week when stored at room temperature in high density polyethylene or polypropylene containers. Prepare standards with 0.10 mg/L or less of each anion fresh every day and store at room temperature in high density polyethylene or polypropylene containers.

9.6.3 Chloride, orthophosphate, nitrate, and sulfate can be combined into a single solution at each of the five standard concentration levels.

9.7 CALIBRATION CURVE

9.7.1 Flush the sampling system with the calibration standard using at least ten times the injection loop volume. Inject the standard and record the peak height or area response. Repeat this step for each calibration standard. Construct calibration curves for each of the four analytes according to Sect. 12.

9.7.2 Record the retention times for each analyte. Measure retention time from an initial starting point on the chromatogram.

9.7.3 Verify the calibration curve after every ten samples and at the end of each day's analyses according to Sect. 10.5.

9.7.4 Whenever a new eluent or regenerant solution is made, reestablish the calibration curve.

10. QUALITY CONTROL

10.1 Each laboratory using this method should develop formalized quality control protocols to continually monitor the bias and precision of all measurements. These protocols are required to ensure that the measurement system is in a state of statistical control. Estimates of bias and precision for wet deposition analyses cannot be made unless these control procedures are followed. Detailed guidelines for the development of quality assurance and quality control protocols for wet deposition measurement systems are published in a manual available from the United States Environmental Protection Agency, Research Triangle Park, NC 27711 (14.6). Included in this manual are procedures for the development of statistical control charts for use in monitoring bias and precision as well as recommendations for the introduction of reagent blanks, laboratory duplicates, field duplicates, spike samples, and performance evaluation samples. These guidelines are to be used by all laboratories involved with wet deposition measurements.

10.2 ESTABLISHMENT OF WARNING AND CONTROL LIMITS -- Warning and control limits are used to monitor drift in the calibration curve, analyses of quality control check samples (QCS), and measured recoveries from laboratory spikes.

10.2.1 Calibration Curve -- After a calibration curve has been constructed according to Sect. 12, reanalyze additional aliquots of the low and high concentration standards. Calculate the concentrations using the previously derived calibration curve. Repeat this procedure until at least ten determinations at each concentration level have been made. These data should be collected on ten different days to provide a realistic estimate of the method variability. Calculate a standard deviation (s) at each concentration level. Use the nominal standard concentration as the mean value ($\bar{x}$) for determining the control limits. A warning limit of $\bar{x} \pm 2s$ and a control limit of $\bar{x} \pm 3s$ should be used. Reestablish these limits whenever instrumental operating conditions change.

10.2.2 Quality Control Check Samples (QCS) -- Calculate warning and control limits for QCS solutions from a minimum of 10 analyses performed on 10 days. Use the calculated standard deviation (s) at each QCS concentration level to develop the limits as described in Sect. 10.2.1. Use the certified or NBS traceable concentration as the mean (target) value. Constant positive or negative measurements with respect to the true value are indicative of a method or procedural bias. Utilize the data obtained from QCS measurements as in Sect. 10.4 to determine when the measurement system is out of statistical control. The standard deviations

used to generate the QCS control limits should be comparable to the single operator precision reported in Table 5. Reestablish new warning and control limits whenever instrumental operating conditions are varied or QCS concentrations are changed.

10.2.3 Laboratory Spike Solutions -- A minimum of 10 analyte spikes of wet deposition samples is required to develop a preliminary data base for the calculation of warning and control limits for spike recovery data. Select the spike concentration such that the working range of the method will not be exceeded. Samples selected for the initial spike recovery study should represent the concentration range common to wet deposition samples in order to reliably estimate the method accuracy. Calculate a mean and standard deviation of the percent recovery data using the formulas provided in the glossary. Determine warning and control limits using $\pm 2s$ and $\pm 3s$, respectively. If the data indicate that no significant method bias exists (14.7), the 100 percent recovery is used as the mean percent recovery. Where a significant bias is determined at the 95% confidence level, the control limits are centered around the bias estimate. Routine spiked sample analyses that yield percent recovery data outside of the control limits are an indication of matrix interferences that should be resolved before routine analyses are continued.

10.2.4 All warning and control limits should be reevaluated on a continual basis as additional data are collected during routine analyses. The limits should be broadened or narrowed if a recalculated standard deviation under similar operating conditions provides a different estimate of the procedure variability.

10.3 Monitor the cleaning procedure by pouring a volume of water (Sect. 7.2) that approximates the median sample size into the collection vessel. Allow the water to remain in the sealed or capped collection container for at least 24 hours and determine the concentrations of the anions that will be measured in wet deposition. If any of the analyte concentrations exceed the MDL, a contamination problem is indicated in the cleaning procedure. Take corrective action before the sampling containers are used for the collection of wet deposition.

10.4 Analyze a quality control check sample (QCS) after the ion chromatograph has been calibrated. This sample may be formulated in the laboratory or obtained from the National Bureau of Standards (NBS Standard Reference Material 2694, Simulated Rainwater). Verify the accuracy of internally formulated QCS solutions with an NBS traceable standard before acceptance as a quality control check. The check sample(s) selected must be within the range of the calibration standards. If the measured value for the QCS falls outside of the $\pm 3s$ limits (Sect. 10.2.2), or if two successive

QCS checks are outside of the ±2s limits, a problem is indicated with the ion chromatograph or calibration curve. Corrective action should be initiated to bring the results of the QCS within the established control limits. Plot the data obtained from the QCS checks on a control chart for routine assessments of bias and precision.

10.5 Verify the calibration curve after a maximum of ten samples and at the end of each day's analyses. Analyze calibration standards at the low and high ends of the working range. If the routine calibration checks do not meet the criteria described in Sect. 10.4, recalibrate the system and reanalyze all samples from the last time the system was in control. Verify the new calibration curve with the QCS according to Sect. 10.4 and reanalyze all samples measured since the last time the system was in control.

10.6 Submit a Field Blank (FB) to the laboratory for every 20 samples. The FB may consist of a water sample (Sect. 7.2) or a known reference solution that approximates the concentration levels characteristic of wet deposition. The FB is poured into the sampling vessel at the field site and undergoes identical processing and analytical protocols as the wet deposition sample(s). Use the analytical data obtained from the FB to determine any contamination introduced in the field and laboratory handling procedures. The data from the known reference solution can be used to calculate a system precision and bias.

10.7 Prepare and analyze a laboratory spike of a wet deposition sample according to the guidelines provided in "Quality Assurance Manual for Precipitation Measurement Systems" (14.6). Compare the results obtained from spiked samples to those obtained from identical samples to which no spikes were added. Use these data to monitor the method percent recovery as described in Sect. 10.2.3.

10.8 Participation in performance evaluation studies is recommended for wet deposition chemistry laboratories. The samples used for these performance audits should contain the analytes of interest at concentrations within the normal working range of the method. The true values are unknown to the analyst. Performance evaluation studies for wet deposition chemistry laboratories are conducted semiannually by the USEPA Performance Evaluation Branch, Quality Assurance Division, Research Triangle Park, NC 27711.

11. PROCEDURE

11.1 Check the instrumental operating parameters each day according to Sect. 9 and Table 1.

11.2 Prepare all standards and construct calibration curves according to Sect. 9.6 and 9.7.

11.3 After the calibration curve is established, analyze the QCS. If the measured value for the QCS is not within the specified limits (Sect. 10.2.2), refer to Sect. 10.4.

11.4 SAMPLE INJECTION

11.4.1 Use the same size injection loop for both standards and samples. Samples may be injected manually with a syringe or with an autosampler.

11.4.2 Flush the sampling system thoroughly with each new sample using a rinse volume of at least ten times the loop size. Inject the sample, avoiding the introduction of air bubbles into the system.

11.4.3 Record the resulting peak heights or areas.

11.5 If the peak height or area response exceeds the working range of the system, dilute the sample with zero standard and reanalyze.

11.6 A sample chromatogram is provided in Figure 2.

12. CALCULATIONS

12.1 For each analyte of interest, calculate a linear least squares fit of the standard concentrations as a function of the measured peak height or area. The linear least squares equation is expressed as follows:

$$y = B_0 + B_1 x$$

where: y = standard concentration in mg/L
x = peak height or area measured
B_0 = y-intercept calculated from: $\bar{y} - B_1\bar{x}$
B_1 = slope calculated from:

$$\sum_{i=1}^{n} (x_i - \bar{x})(y_i - \bar{y}) / \sum_{i=1}^{n} (x_i - \bar{x})^2$$

where: $\bar{x}$ = mean of peak heights or areas measured
$\bar{y}$ = mean of standard concentrations
n = number of samples

The correlation coefficient should be 0.9990 or greater. Determine the concentration of the analyte of interest from the calibration curve.

12.2 If the relationship between standard concentration and measured peak height or area is nonlinear, use a second degree polynomial least squares equation to derive a curve with a correlation $\geq$0.9990. The second degree polynomial equation is expressed as follows:

$$y = B_2 x^2 + B_1 x + B_0$$

A computer program is necessary for the derivation of this function. Determine the concentration of the analyte of interest from the calibration curve.

12.3 An integration system may also be used to provide a direct readout of the concentration of the analyte of interest.

12.4 Report data in mg/L as Cl^-, NO_3^-, PO_4^{-3}, or SO_4^{-2}. Do not report data lower than the lowest calibration standard.

13. PRECISION AND BIAS

13.1 The mean percent recovery and mean bias of this method were determined from the analysis of spiked wet deposition samples according to ASTM Standard Practice D4210, Annex A4 (14.7). The results are summarized in Table 4. No statistically significant biases were found for any of the four inorganic anions.

13.2 Single-operator precision and bias were obtained from the analysis of quality control check samples that approximated the levels common to wet deposition samples. These results reflect the accuracy that can be expected when the method is used by a competent operator. These data are presented in Table 5.

14. REFERENCES

14.1 Annual Book of ASTM Standards, Section 11, Vol. 11.01 (1), "Definitions of Terms Related to Water," Standard D 1129-82b, 1983, p. 4.

14.2 Annual Book of ASTM Standards, Part 31, "Excerpts from Standard for Metric Practice," Standard E 380-79, 1982, pp. 679-694.

14.3 "Safety in Academic Chemistry Laboratories," American Chemical Society Publication, Committee on Chemical Safety, 3rd Edition, 1979.

14.4 Annual Book of ASTM Standards, Part 31, "Standard Specification for Reagent Water," Standard D 1193-77, 1982, p. 39.

14.5 Peden, M. E. and Skowron, L. M., "Ionic Stability of Precipitation Samples," Atmos. Environ. **12**, 1978, pp. 2343-2349.

14.6 Topol, L. E., Lev-On, M., Flanagan, J., Schwall, R. J., Jackson, A. E., Quality Assurance Manual for Precipitation Measurement Systems, 1985, U.S. Environmental Protection Agency, Environmental Monitoring Systems Laboratory, Research Triangle Park, NC 27711.

14.7 Annual Book of ASTM Standards, Section 11, Vol. 11.01 (1), "Practice for Intralaboratory Quality Control Procedures and a Discussion of Reporting Low-Level Data," Standard D4210 Annex A4, 1983, pp. 15-16.

Table 1. Method Detection Limits and Concentration Ranges for the Determination of Anions in Wet Deposition.

Analyte	Method Detection Limit,[a] mg/L	Concentration Range, mg/L
Chloride	0.03	0.03 - 2.00
Orthophosphate	0.02	0.02 - 0.25
Nitrate	0.03	0.03 - 5.00
Sulfate	0.03	0.03 - 8.00

a. Chromatographic Conditions:
   Guard Column -- Dionex AG3
   Separator Column -- Dionex AS3
   Fiber Suppressor -- Dionex AFS
   Detector -- As specified in 6.1.5
   Eluent -- As specified in 7.3
   Sample Loop -- 250 uL
   Flow Rate -- 3 mL/min
   Detector Sensitivity -- 10 uS/cm

Table 2. Compatibility of Separator and Suppressor Columns with Suggested Regeneration and Eluent Solutions for the Analysis of Wet Deposition.

Anion Separator Column	Eluent Solution	Anion Suppressors Packed Bed	Fiber	Micro-membrane
Dionex AS1	0.003 M $NaHCO_3$ 0.0024 M Na_2CO_3	compatible	compatible	not recommended[a]
Dionex AS3	0.0028 M $NaHCO_3$ 0.0022 M Na_2CO_3	compatible	compatible	not recommended[a]
Dionex AS4	0.0028 M $NaHCO_3$ 0.0022 M Na_2CO_3	compatible	compatible	compatible
Dionex AS4A	0.00075 M $NaHCO_3$ 0.0022 M Na_2CO_3	compatible	compatible	compatible

a. The increased back-pressure created by the micro-membrane suppressor may reduce column efficiency when this type of separator column is used. Refer to the manufacturer's guidelines for recommendations of minor adjustments necessary to make this system work properly.

Regeneration Solutions:

Packed Bed -- 0.1 N HCl or 1.0 N H_2SO_4
Fiber -- 0.025 N H_2SO_4
Micro-membrane -- 0.018 N H_2SO_4

Table 3. Retention Times and Suggested Calibration Standard Concentrations for the Determination of Anions in Wet Deposition Samples.[a]

Analyte	Approximate Retention Time Range,[b] sec	Calibration Standards, mg/L
Chloride	84 - 120	zero
		0.03
		0.40
		0.75
		1.10
		1.50
Orthophosphate	144 - 180	zero
		0.02
		0.10
		0.15
		0.20
		0.25
Nitrate	240 - 300	zero
		0.03
		1.00
		2.00
		3.00
		4.00
Sulfate	336 - 396	zero
		0.03
		1.25
		2.50
		3.75
		5.00

a. Based on the MDL and 95th percentile concentrations of each analyte obtained from analyses of over five thousand wet deposition samples from the NADP/NTN precipitation network.

b. The retention time was measured from the time of injection. For chromatographic conditions, refer to Table 1.

Table 4. Single-Operator Precision and Bias for Chloride, Orthophosphate, Nitrate, and Sulfate Determined from Analyte Spikes of Wet Deposition Samples.[a]

Analyte	Amount Added, mg/L	n[b]	Mean Percent Recovery	Mean Bias, mg/L	Standard Deviation, mg/L	Statistically Significant Bias?[c]
Chloride	0.10	10	102.0	0.00	0.01	No
	0.32	9	101.8	0.01	0.02	No
Ortho-phosphate	0.11	10	98.3	0.00	0.01	No
Nitrate	0.44	10	99.8	0.00	0.03	No
	1.10	10	96.0	-0.04	0.07	No
Sulfate	0.46	10	101.3	0.01	0.04	No
	1.10	10	98.7	-0.01	0.05	No

a. Chromatographic Conditions:
   Guard Column -- Dionex AG3
   Separator Column -- Dionex AS3
   Packed Bed Suppressor Column -- Dionex ASC2
   Detector -- As specified in 6.1.5
   Eluent -- As specified in 7.3
   Sample Loop -- 250 uL
   Flow Rate -- 3 mL/min
   Detector Sensitivity -- 10 uS/cm
b. Number of replicates
c. 95% Confidence Level

Table 5. Single-Operator Precision and Bias for Chloride, Orthophosphate, Nitrate, and Sulfate Determined from Quality Control Check Samples.[a]

Analyte	Theoretical Concentration, mg/L	Measured Concentration, mg/L	n[b]	Bias, mg/L	Bias, %	Precision, s, mg/L	Precision, RSD, %
Chloride	0.18	0.19	132	0.01	5.6	0.02	10.5
	0.85	0.87	479	0.02	2.4	0.03	3.4
	1.78	1.88	255	0.10	5.6	0.05	2.7
Orthophosphate	0.05	0.05	10	0.00	0.0	0.00	0.0
	0.15	0.15	10	0.00	0.0	0.01	6.7
Nitrate	0.80	0.81	485	0.01	1.2	0.02	2.5
	3.54	3.64	415	0.10	2.8	0.12	3.3
Sulfate	0.72	0.72	340	0.00	0.0	0.03	4.2
	0.94	0.92	482	-0.02	-2.1	0.03	3.3
	3.60	3.69	122	0.09	2.5	0.11	3.0

The above data were obtained from records of measurements made under the direction of the NADP/NTN quality assurance program.

a. For chromatographic conditions, refer to Table 1.
b. Number of replicates

Figure 1. Percentile Concentration Values Obtained from Wet Deposition Samples: Chloride, Orthophosphate, Nitrate, and Sulfate.

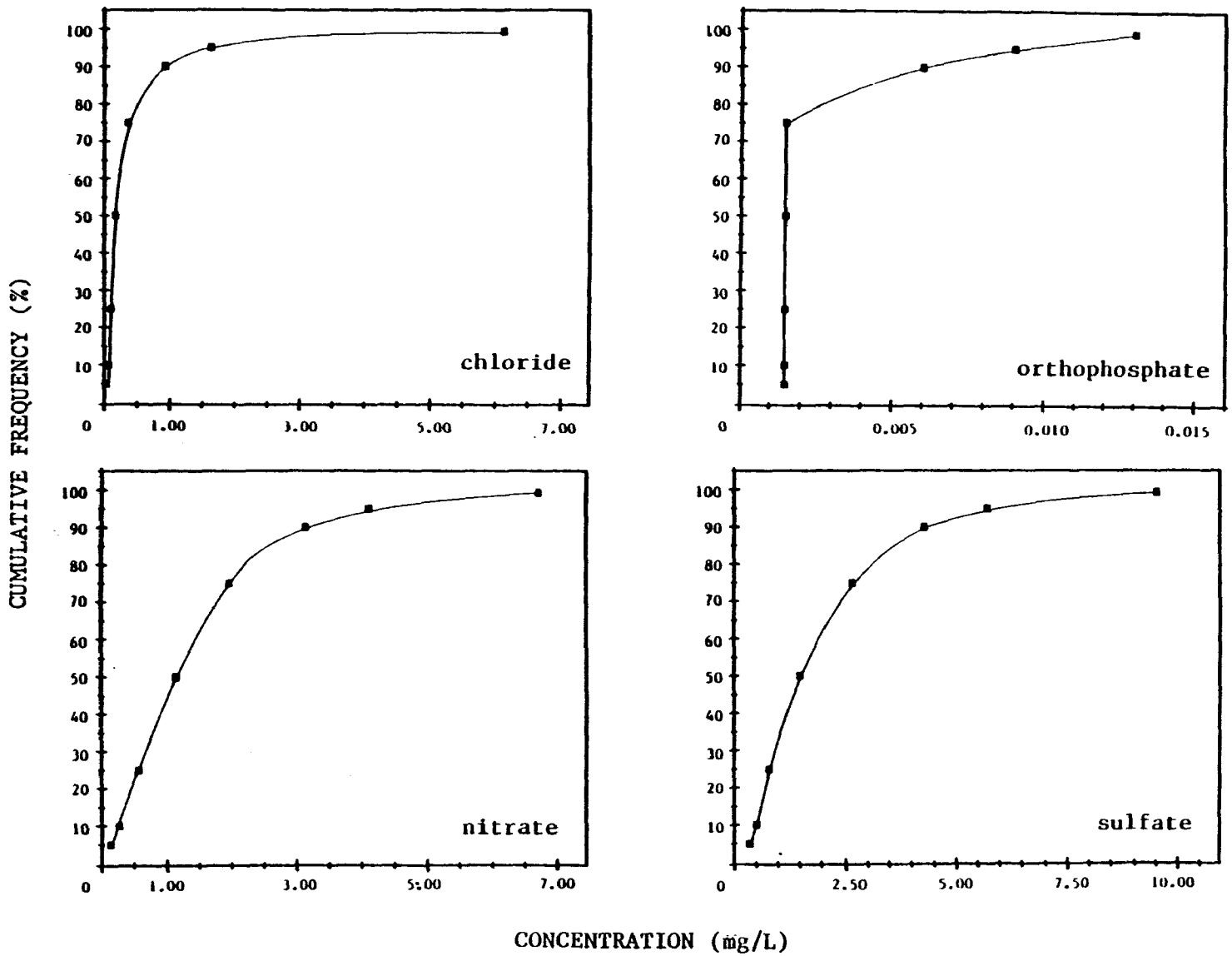

Figure 2. Chromatogram of a Wet Deposition Sample Containing Chloride, Orthophosphate, Nitrate, and Sulfate, (a) Without and (b) With Eluent Matching.

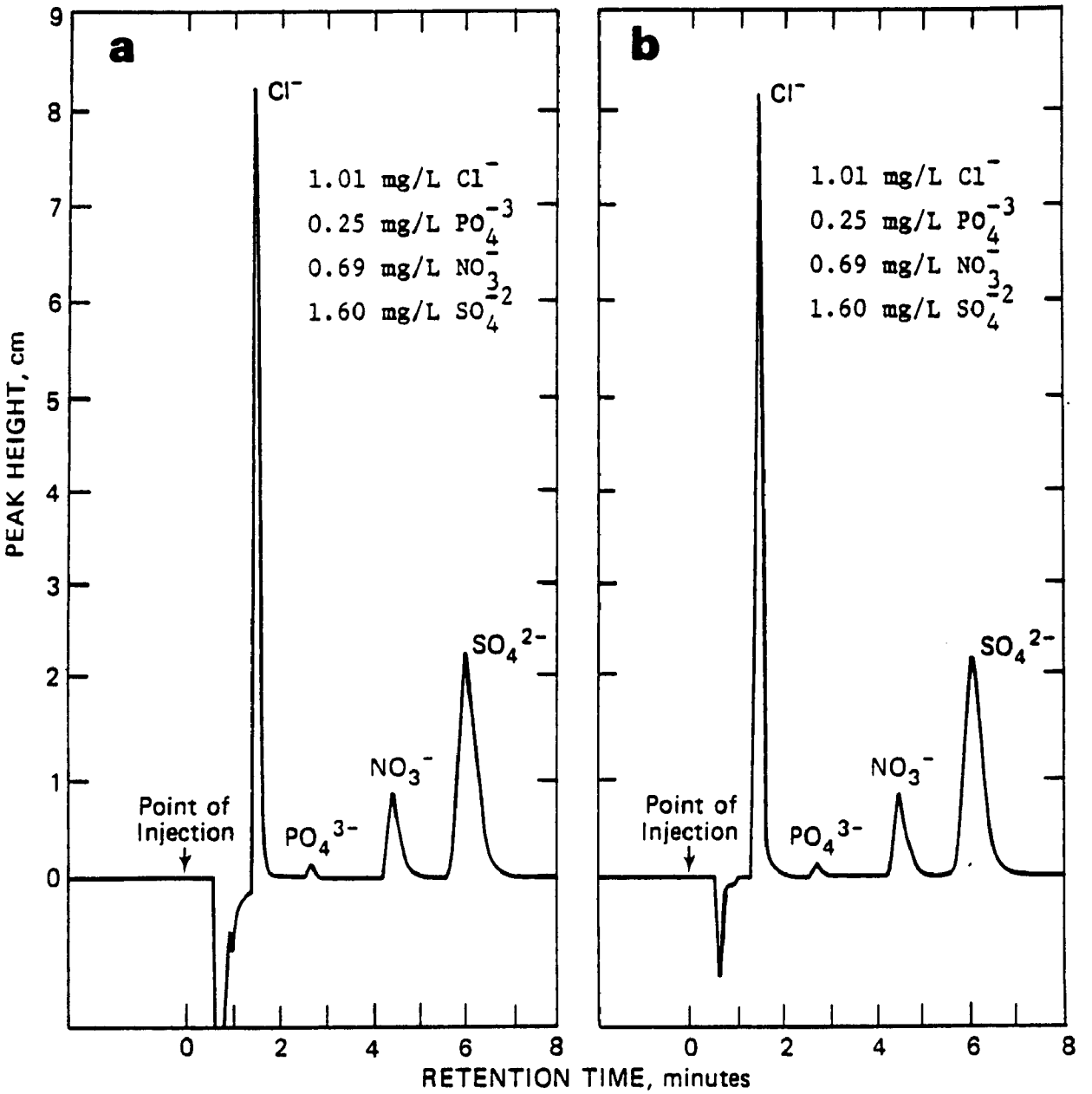

Chromatographic Conditions:
- Guard Column -- Dionex AG3
- Separator Column -- Dionex AS3
- Fiber Suppressor -- Dionex AFS
- Detector -- As specified in 6.1.5
- Eluent -- As specified in 7.3
- Sample Loop -- 250 µL
- Flow Rate -- 3 mL/min
- Detector Sensitivity -- 10 µS/cm

Method 300.7 -- Dissolved Sodium, Ammonium, Potassium, Magnesium, and Calcium in Wet Deposition by Chemically Suppressed Ion Chromatography

March 1986

Performing Laboratory:

Susan R. Bachman
Jane E. Rothert
Brian Kaiser
Carla Jo Brennan
Mark E. Peden

Illinois State Water Survey
Analytical Chemistry Unit
2204 Griffith Drive
Champaign, Illinois 61820

Sponsoring Agency:

John D. Pfaff, Project Officer

Inorganic Analysis Section
Physical and Chemical Methods Branch
United States Environmental Protection Agency
Office of Research and Development
Environmental Monitoring and Support Laboratory
Cincinnati, Ohio 45268

INDEX

Section Number	Subject
1	Scope and Application
2	Summary of Method
3	Definitions
4	Interferences
5	Safety
6	Apparatus and Equipment
7	Reagents and Consumable Materials
8	Sample Collection, Preservation, and Storage
9	Calibration and Standardization
10	Quality Control
11	Procedure
12	Calculations
13	Precision and Bias
14	References

TABLES

1. Method Detection Limits and Concentration Ranges for Chemically Suppressed Ion Chromatographic Determination of Cations in Wet Deposition.
2. Retention Times and Suggested Calibration Standard Concentrations for the Determination of Cations in Wet Deposition.
3. Single-Operator Precision and Bias for Sodium, Ammonium, Potassium, Magnesium, and Calcium Determined from Analyte Spikes of Wet Deposition Samples.
4. Single-Operator Precision and Bias for Sodium, Ammonium, Potassium, Magnesium, and Calcium Determined from Quality Control Check Samples.

FIGURES

1. Percentile Concentration Values Obtained from Wet Deposition Samples.
2. Chromatogram of a Calibration Standard Containing Sodium, Ammonium, and Potassium.
3. Chromatogram of a Calibration Standard Containing Magnesium and Calcium.

1. SCOPE AND APPLICATION

1.1 This method is applicable to the determination of sodium, ammonium, potassium, magnesium, and calcium in wet deposition by chemically suppressed ion chromatography.

1.2 The term "wet deposition" is used in this method to designate rain, snow, dew, sleet, and hail.

1.3 The method detection limits (MDL) for the above analytes determined from replicate analyses of quality control check solutions are 0.02 mg/L for magnesium and calcium, 0.03 mg/L for sodium and ammonium, and 0.01 mg/L for potassium. The concentration of analyte in each check sample is detailed in Table 4. The applicable analyte concentration range of this method is outlined in Table 1.

1.4 Figure 1 represents cumulative frequency percentile concentration plots of sodium, ammonium, potassium, magnesium, and calcium obtained from analyses of over five thousand wet deposition samples. These data may be used as an aid in the selection of appropriate calibration standard concentrations.

2. SUMMARY OF METHOD

2.1 Ion chromatography combines conductimetric detection with the separation capabilities of ion exchange resins. A filtered 100 uL aliquot of sample is pumped through an ion exchange column where the cations of interest are separated. Each ion's affinity for the exchange sites, known as its selectivity quotient, is largely determined by its radius and valence. Because different ions have different migration rates, the sample ions elute from the column as discrete bands. Each ion is identified by its retention time within the exchange column. The sample ions are selectively eluted off the separator column and onto a suppressor column. The eluent ions are neutralized and the sample ions are converted to their corresponding strong bases which are detected in a conductance cell. The chromatograms produced are displayed on a strip chart recorder or other data acquisition device for measurement of peak height or area. The ion chromatograph is calibrated with standard solutions containing known concentrations of the cation(s) of interest. Calibration curves are constructed from which the concentration of each analyte in the unknown sample is determined.

3. DEFINITIONS

3.1 ION EXCHANGE -- a reversible process by which ions are interchanged between an insoluble material and a liquid with no substantial structural changes of the material (14.1).

3.2 ELUENT -- the ionic liquid mobile phase used to transport the sample through the exchange columns.

3.3 REGENERANT -- a solution that converts and maintains an active form of the suppressor.

3.4 RESOLUTION -- the ability of a column to separate constituents under specified test conditions. Peak resolution is a function of column efficiency, selectivity, and capacity.

3.5 RETENTION TIME -- the interval measured from the point of sample injection to the point of maximum peak height or area.

3.6 For definitions of other terms used in this method, refer to the glossary. For an explanation of the metric system including units, symbols, and conversion factors see American Society for Testing and Materials (ASTM) Standard E 380, "Metric Practices" (14.2).

4. INTERFERENCES

4.1 Unresolved peaks will result when the concentration of one of the sample components is 10 to 20 times higher than another component that appears in the chromatogram as an adjacent peak. Decreasing the eluent concentration or the flow rate may correct this problem.

4.2 Interferences may be caused by ions with retention times that are similar to and thus overlap those of the cation of interest. This type of positive interference is rare in wet deposition samples. If this type of interference occurs, decreasing the eluent concentration or the flow rate may improve peak resolution.

4.3 The divalent cations, present in solution, which are not eluted with the monovalent cation eluent, will cause a loss of retention and resolution of the monovalent species, as they accumulate on the separator column. When this occurs, clean the monovalent column with 20 mL of 1.0 N HCl for 15 minutes and then equilibrate by rinsing the column with eluent until a stable baseline is obtained.

4.4 Deterioration in column performance may result from the buildup of contaminants on the exchange resin. Losses in retention and resolution are symptoms of column deterioration. Refer to the manufacturer's guidelines for instructions on cleaning the column resin.

4.5 The presence of air bubbles in the columns, tubing, or conductivity detector cell will cause baseline and peak variability. Avoid introducing air into the system when injecting samples and standards. Using degassed eluents and regenerants will help to minimize the introduction of air.

5. SAFETY

5.1 The calibration standards, sample types, and most reagents used in this method pose no hazard to the analyst. Use a fume hood, protective clothing, and safety glasses when handling concentrated hydrochloric acid (Sect. 7.3-7.4).

5.2 Keep the doors of the instrument column compartment closed at all times when pumps and columns are in use to prevent injury to the operator from column explosion if the pump pressure or column backpressure increases.

5.3 Follow American Chemical Society guidelines regarding the safe handling of chemicals used in this method (14.3).

6. APPARATUS AND EQUIPMENT

6.1 ION CHROMATOGRAPH -- Select a chromatograph equipped as detailed in Sects. 6.1.1-6.1.9. To determine monovalent and divalent cations simultaneously, select a dual channel chromatograph equipped with two separator and two suppressor columns. If the sample ions are to be determined sequentially by analyzing the sample twice, the same suppressor column may be used for both determinations. The divalent eluent solution is strongly retained on the guard and separator columns, making the determination of monovalent ions after divalent ions with the same guard and separator columns impractical. Therefore, use two different sets of cation guard and separator columns; one set should be dedicated to the determination of monovalent and the other to divalent cations.

6.1.1 Cation Guard Column -- Place before the separator column. This contains the same resin as the separator column and is used to protect the ion exchange column from being fouled by particulates or organic constituents (4 x 50 mm, Dionex P/N 30830, CG1, or equivalent). Using a cation guard column will prolong the life of the separator column.

6.1.2 Cation Separator Column -- This is a column packed with a pellicular low-capacity cation exchange resin containing polystyrene-divinylbenzene beads coated with sulfate active sites (4 x 250 mm, Dionex P/N 30831, CS1, or equivalent).

6.1.3 Cation Suppressor Column -- Place after the separator column. This may be in the form of a packed bed, a fiber, or a micro-membrane suppressor. The first type of suppressor is packed with a high-capacity cation exchange resin in the unprotonated form capable of converting the eluent to a low or negligible background conductance and converting the sample cations to their corresponding strong bases (Dionex P/N 30834, CSC2, or equivalent). The second two types of suppressors utilize a semipermeable membrane containing cation exchange sites to suppress eluent conductance (Dionex P/N 35352, CFS, fiber; Dionex P/N 37076, CMMS, micro-membrane; or equivalent). Both the fiber and micro-membrane suppressors are under continuous regeneration.

6.1.4 Compressed Gas (Nitrogen or Air) -- Use ultra-high purity 99.999% (v/v) compressed gas conforming to the recommendations of the manufacturer of the ion chromatograph.

6.1.5 Detector -- Select a flow-through, temperature-compensated, electrical conductance cell with a volume of approximately 6 uL coupled with a meter capable of reading from 0 to 1000 uS/cm on an analog or digital scale.

6.1.6 Pump -- Use a pump capable both of delivering an accurate flow rate and of tolerating the optimal pressure suggested by the instruction manual accompanying the ion chromatograph and columns selected. A constant pressure, constant flow pump is recommended for enhanced baseline stability.

6.1.7 Recorder -- This should be compatible with the maximum detector output with a full-scale response time in 0.5 sec or less.

6.1.8 Sample Loop -- Select a sample loop compatible with the column system having a capacity of 100 uL for optimal sensitivity in wet deposition analyses.

6.1.9 Sampling System -- Select one of the following for sampling.

6.1.9.1 Syringe -- Use a syringe equipped with a male fitting having a minimum capacity of 2 mL.

6.1.9.2 Autosampler -- Use an autosampling system capable of precise delivery, equipped with a dust cover to prevent airborne contamination.

6.2 ELUENT AND REGENERANT RESERVOIRS -- Select containers with a 4-20 L capacity that are designed to minimize introduction of air into the flow system. The regenerant reservoirs may be pressurized with nitrogen or air (5-10 psi) to ensure constant delivery to the suppressor column.

6.3 INTEGRATOR (optional) -- Select an instrument compatible with the detector output to quantitate the peak height or area. A system such as the Spectra Physics 4270 Integrator or a personal computer with a chromatographic software package such as furnished by Nelson Analytical, may be used to provide a direct readout of the concentration of the analyte of interest. If an integrator is used, the maximum height or area measurement must be within the linear range of the integrator.

6.4 LABORATORY FACILITIES -- Laboratories used for the analysis of wet deposition samples should be free from external sources of contamination. The use of laminar flow clean air workstations is recommended for sample processing and preparation to avoid the introduction of airborne contaminants. Samples should always be capped or covered prior to analysis. A positive pressure environment within the laboratory is also recommended to minimize the introduction of external sources of contaminant gases and particulates. Windows within the laboratory should be kept closed at all times and sealed if air leaks are apparent. The use of disposable tacky floor mats at the entrance to the laboratory is helpful in reducing the particulate loading within the room. Maintain laboratory temperature within $\pm 3^{\circ}C$ to minimize baseline drift and changes in detector response.

7. REAGENTS AND CONSUMABLE MATERIALS

7.1 PURITY OF REAGENTS -- Use reagent grade chemicals for all solutions. All reagents shall conform to the specifications of the Committee on Analytical Reagents of the American Chemical Society (ACS), where such specifications are available.

7.2 PURITY OF WATER -- Use water conforming to ASTM Specification D 1193, Type II (14.4). Point of use 0.2 micrometer filters are recommended for all faucets supplying water to prevent the introduction of bacteria and/or ion exchange resins into reagents, standard solutions, and internally formulated quality control check solutions. Degas the water prior to use by placing in a glass container, agitating vigorously, and aspirating off the liberated gases.

7.3 ELUENT SOLUTION -- For the determination of monovalent cations (sodium, ammonium, and potassium), use a dilute (0.005 N) hydrochloric acid (HCl) eluent. For the determination of divalent cations (magnesium and calcium), use a solution of 0.002 N HCl and 0.004 N meta phenylenediamine Dihydrochloride (mPDA 2HCl).

7.3.1 Hydrochloric Acid (0.005 N) -- (eluent solution for monovalent cations) Add 1.65 mL of concentrated HCl (sp gr 1.19) to 500 mL of water (Sect. 7.2) and dilute to 4 L.

7.3.2 Hydrochloric Acid : meta Phenylenediamine Dihydrochloride (0.0015 N : 0.0030 N) -- (eluent solution for divalent cations) Add 1.087 g of mPDA 2HCl and 0.50 mL of concentrated HCl to about 500 mL of water (Sect. 7.2). Mix well and dilute to 4 L with water (Sect. 7.2).

7.4 HYDROCHLORIC ACID (1.0 N) -- Add 83.0 mL of concentrated HCl (sp gr 1.19) to 900 mL of water (Sect. 7.2) and dilute to 1 L.

7.5 REGENERATION SOLUTION -- Prepare the following solutions for use with packed bed, fiber, or micromembrane suppressors.

7.5.1 Sodium Hydroxide (0.5 N) -- (regenerant for a packed bed column) Dissolve 80 g of sodium hydroxide (NaOH) in water (Sect. 7.2) and dilute to 4 L.

7.5.2 Tetramethylammonium hydroxide (0.04 N) -- (regenerant for a fiber or micro-membrane suppressor) Dissolve 29.976 g of tetramethylammonium hydroxide pentahydrate (TMAOH $5H_2O$) in water (Sect. 7.2) and dilute to 4 L. Alternatively, add 58.4 mL of a 25% solution of TMAOH to water (Sect. 7.2) and dilute to 4 L.

7.5.3 Barium Hydroxide (0.08 N) -- (regenerant for a fiber or micro-membrane suppressor) Dissolve 50.45 g of barium hydroxide octahydrate ($Ba(OH)_2$ $8H_2O$) in water (Sect. 7.2) and dilute to 4 L. Carbon dioxide present in the air and water will form barium carbonate ($BaCO_3$) that must be filtered out of the regenerant before it enters the micro-membrane suppressor. To prevent the intake of $BaCO_3$ precipitate into the suppressor, install a filter over the inlet end of the regenerant line, Agitate the regenerant thoroughly before use to ensure that the barium hydroxide is completely in solution.

7.6 STOCK STANDARD SOLUTIONS -- Stock standard solutions may be purchased as certified solutions or prepared from ACS reagent grade materials as listed below. Store the solutions at room temperature in high density polyethylene or polypropylene containers.

7.6.1 Ammonium Solution, Stock (1.0 mL = 1.0 mg NH_4) -- Dissolve 2.9654 g of ammonium chloride (NH_4Cl), dried at 105°C for 1 hour, in water (Sect. 7.2) and dilute to 1 L.

7.6.2 Calcium Solution, Stock (1.0 mL = 1.0 mg Ca) -- Add 2.497 g of calcium carbonate ($CaCO_3$), dried at 180 °C for one hour, to approximately 600 mL of water (Sect. 7.2). Add concentrated hydrochloric acid (HCl, sp gr 1.19) slowly until all the solid has dissolved. Dilute to 1 L with water (Sect. 7.2).

7.6.3 Magnesium Solution, Stock (1.0 mL = 1.0 mg Mg) -- Dissolve 1.000 g of magnesium ribbon in a minimal volume of 6 N HCl and dilute to 1 L with water (Sect. 7.2).

7.6.4 Potassium Solution, Stock (1.0 mL = 1.0 mg K) -- Dissolve 1.9067 g of potassium chloride (KCl), dried at 105°C for 1 hour, in water (Sect. 7.2) and dilute to 1 L.

7.6.5 Sodium Solution, Stock (1.0 mL = 1.0 mg Na) -- Dissolve 2.5420 g of sodium chloride (NaCl), dried at 105°C for 1 hour, in water (Sect. 7.2) and dilute to 1 L.

7.7 SAMPLE CONTAINERS -- Use polyolefin or glass sample holders that have been rinsed thoroughly with water (Sect. 7.2) before use.

8. SAMPLE COLLECTION, PRESERVATION AND STORAGE

8.1 Collect samples in high density polyethylene (HDPE) containers that have been thoroughly rinsed with ASTM Type II water (7.2). Do not use strong mineral acids or alkaline detergent solutions for cleaning collection vessels. Residual acids may remain in the polyethylene matrix and slowly leach back into the sample. Alkaline detergents may also leave residues that may affect the sample chemistry. Cap collection bottles after cleaning to prevent contamination from airborne contaminants; air dry collection buckets in a laminar flow clean air workstation and wrap in polyethylene bags prior to use. If a laminar flow workstation is not available, pour out any residual rinse water and bag the buckets immediately. Do not dry the bucket interior by any method other than air drying in a laminar flow clean air workstation.

8.2 The frequency of sample collection and the choice of sampler design are dependent on the monitoring objectives. In general, the use of wet-only samplers is recommended to exclude dry deposition contributions, minimize sample contamination, retard evaporation, and enhance sample stability. Sample collection frequency may vary from subevent to monthly sampling periods. Collection periods of more than one week are not recommended since sample integrity may be compromised by longer exposure periods.

8.3 The dissolution of particulate materials and the presence of microbial activity will affect the stability of all of the cations in this method. This instability generally results in increased concentrations of magnesium, calcium, sodium, and potassium and decreased ammonium concentrations. Ion chromatographic measurements should be made immediately after sample collection when possible. Refrigeration of samples at 4°C will retard but not prevent changes in the concentration of these species (14.5).

8.3.1 Filtration of samples through a 0.45 micrometer membrane leached with water (Sect. 7.2) is effective at stabilizing magnesium, calcium, sodium, and potassium concentrations that are influenced by the dissolution of alkaline particulate matter (14.5). Monitoring of the filtration procedure is necessary to ensure that samples are not contaminated by the membrane or filtration apparatus. Filtered samples are stable for a period of six weeks.

8.3.2 Filtration followed by refrigeration at 4°C is the recommended preservation technique for ammonium ion. Holding times should not exceed seven days.

9. CALIBRATION AND STANDARDIZATION

9.1 Assemble the ion chromatograph according to the manufacturer's instructions. Recommended operating conditions for the apparatus are listed in Table 1. Included in Table 2 are retention times characteristic of this method. Other columns, chromatographic conditions, or detectors may be used provided the requirements in Sect. 6 are met.

9.2 Bring all standards, samples, eluents, and regenerants to ambient temperature before beginning any analyses. Maintain laboratory temperature conditions within ±3°C while conducting analyses.

9.3 Use the eluent strength in Sect. 7.3 for wet deposition analyses. If peak resolution is not adequate, it may be necessary to decrease the eluent strength. Refer to the manufacturer's recommendations for guidelines on optimizing eluent strength.

9.4 Adjust the instrument flow rate for optimal peak resolution. Decreasing the flow rate may provide greater peak resolution but will lengthen retention times. Increasing the flow rate decreases peak resolution and shortens retention times. Refer to the manufacturer's recommendations for guidelines on optimizing flow rate.

9.5 Equilibrate the system by pumping eluent through all the columns and the detector until a stable baseline is obtained.

9.6 CALIBRATION SOLUTIONS

9.6.1 Five calibration solutions and one zero standard are needed to generate a suitable calibration curve. The lowest calibration solution should contain the analyte(s) of interest at a concentration greater than or equal to the method detection limit. The highest solution should approach the expected upper limit of concentration of the analyte in wet deposition. Prepare the remaining solutions such that they are evenly distributed throughout the concentration range. If a second detector sensitivity scale setting is used to increase the instrument's concentration range, calibrate at the two sensitivity levels. Suggested calibration standards for each analyte are listed in Table 2.

9.6.2 Prepare all calibration standards by diluting the stock standards (Sect. 7.6). Use glass (Class A) or plastic pipettes that are within the bias and precision tolerances specified by the manufacturer. The calibration standards are stable for one week when stored at 4°C in high density polyethylene containers.

9.6.3 Sodium, ammonium, potassium, magnesium, and calcium can be combined into a single solution at each of the five standard concentration levels.

9.7 CALIBRATION CURVE

9.7.1 Flush the sampling system with the calibration standard using at least ten times the injection loop volume. Inject the standard and record the peak height or area response. Repeat this procedure for the remaining standards. Construct calibration curves for each of the five analytes according to Sect. 12.

9.7.2 Record the retention times for each analyte. Measure retention time from an initial starting point on the chromatogram.

9.7.3 Verify the calibration curve after every ten samples and at the end of each day's analyses according to Sect. 10.5.

9.7.4 Whenever a new eluent or regenerant solution is made, reestablish the calibration curve.

10. QUALITY CONTROL

10.1 Each laboratory using this method should develop formalized quality control protocols to continually monitor the bias and precision of all measurements. These protocols are required to ensure that the measurement system is in a state of statistical control. Estimates of bias and precision for wet deposition analyses cannot be made unless these control procedures are followed. Detailed guidelines for the development of quality assurance and quality control protocols for wet deposition measurement systems are published in a manual available from the United States Environmental Protection Agency, Research Triangle Park, NC 27711 (14.6). Included in this manual are procedures for the development of statistical control charts for use in monitoring bias and precision as well as recommendations for the introduction of reagent blanks, laboratory duplicates, field duplicates, spike samples, and performance evaluation samples. These guidelines are to be used by all laboratories involved with wet deposition measurements.

10.2 ESTABLISHMENT OF WARNING AND CONTROL LIMITS -- Warning and control limits are used to monitor drift in the calibration curve, analyses of quality control check samples (QCS), and measured recoveries from laboratory spikes.

10.2.1 Calibration Curve -- After a calibration curve has been constructed according to Sect. 12, reanalyze additional aliquots of the low and high concentration standards. Calculate the concentrations using the previously derived calibration curve. Repeat this procedure until at least ten determinations at each concentration level have been made. These data should be collected on ten different days to provide a realistic estimate of the method variability. Calculate a standard deviation (s) at each concentration level. Use the nominal standard concentration as the mean value ($\bar{x}$) for determining the control limits. A warning limit of $\bar{x} \pm 2s$ and a control limit of $\bar{x} \pm 3s$ should be used. Reestablish these limits whenever instrumental operating conditions change.

10.2.2 Quality Control Check Samples (QCS) -- Calculate warning and control limits for QCS solutions from a minimum of ten analyses performed on ten days. Use the calculated standard deviation (s) at each QCS concentration level to develop the limits as described in Sect. 10.2.1. Use the certified or NBS traceable concentration as the mean (target) value. Constant positive or negative measurements with respect to the true value are indicative of a method or procedural bias. Utilize the data obtained from QCS measurements as in Sect. 10.4 to determine when the measurement system is out of statistical control. The standard deviations used to generate the QCS control limits should be comparable to the single operator precision reported in Table 4. Reestablish new warning and control limits whenever instrumental operating conditions are varied or QCS concentrations are changed.

10.2.3 Laboratory Spike Solutions -- A minimum of ten analyte spikes of wet deposition samples is required to develop a preliminary data base for the calculation of warning and control limits for spike recovery data. Select the spike concentration such that the working range of the method will not be exceeded. Samples selected for the initial spike recovery study should represent the concentration range common to wet deposition samples in order to reliably estimate the method accuracy. Calculate a mean and standard deviation of the percent recovery data using the formulas provided in the glossary. Determine warning and control limits using $\pm 2s$ and $\pm 3s$, respectively. If the data indicate that no significant method bias exists (14.7), the 100 percent recovery is used as the mean percent recovery. Where a significant bias is determined at the 95% confidence level, the control limits are centered around the bias estimate. Routine spiked sample analyses that yield percent recovery data outside of the control limits are an indication of matrix interferences that should be resolved before routine analyses are continued.

10.2.4 All warning and control limits should be reevaluated on a continual basis as additional data are collected during routine analyses. The limits should be broadened or narrowed if a recalculated standard deviation under similar operating conditions provides a different estimate of the procedure variability.

10.3 Monitor the cleaning procedure by pouring a volume of water (Sect. 7.2) that approximates the median sample size into the collection vessel. Allow the water to remain in the sealed or capped collection container for at least 24 hours and determine the concentrations of the cations of interest. If the solution concentrations exceed the MDL, a contamination problem is indicated in the cleaning procedure. Take corrective action before the sampling containers are used for the collection of wet deposition.

10.4 Analyze a quality control check sample after the ion chromatograph has been calibrated. This sample may be formulated in the laboratory, or obtained from the National Bureau of Standards (NBS Standard Reference Material 2694, Simulated Rainwater). Verify the accuracy of internally formulated QCS solutions with an NBS traceable standard before acceptance as a quality control check. The check sample(s) selected must be within the range of the calibration standards. If the measured value for the QCS falls outside of the $\pm 3s$ limits (Sect. 10.2.2), or if two successive QCS checks are outside of the $\pm 2s$ limits, a problem is indicated with the ion chromatograph or calibration curve. Corrective action should be initiated to bring the results of the QCS within the established control limits. Plot the data obtained from the QCS checks on a control chart for routine assessments of bias and precision.

10.5 Verify the calibration curve after a maximum of ten samples and at the end of each day's analyses. Analyze calibration standards at the low and high ends of the working range. If the routine calibration checks do not meet the criteria described in Sect. 10.4, recalibrate the system and reanalyze all samples from the last time the system was in control. Verify the new calibration curve with the QCS according to Sect. 10.4 and reanalyze all samples measured since the last time the system was in control.

10.6 Submit a Field Blank (FB) to the laboratory for every 20 samples. The FB may consist of a water sample (Sect. 7.2) or a known reference solution that approximates the concentration levels characteristic of wet deposition. The FB is poured into the sampling vessel at the field site and undergoes identical processing and analytical protocols as the wet deposition sample(s). Use the analytical data obtained from the FB to determine any biases introduced in the field and laboratory handling procedures. the data from the known reference solution can be used to calculate a system precision and bias.

10.7 Prepare and analyze a laboratory spike of a wet deposition sample according to the guidelines provided in "Quality Assurance Manual for Precipitation Measurement Systems" (14.6). Compare the results obtained from spiked samples to those obtained from identical samples to which no spikes were added. Use these data to monitor the method percent recovery as described in Sect. 10.2.3.

10.8 Participation in performance evaluation studies is recommended for wet deposition chemistry laboratories. The samples used for these performance audits should contain the analytes of interest at concentrations within the normal working range of the method. The true values are unknown to the analyst. Performance evaluation studies for wet deposition chemistry laboratories are conducted semiannually by the USEPA Performance Evaluation Branch, Quality Assurance Division, Research Triangle Park, NC 27711.

11. PROCEDURE

11.1 Check the instrumental operating parameters each day according to Sect. 9 and Table 1.

11.2 Prepare all standards and construct calibration curves according to Sect. 9.6 and 9.7.

11.3 After the calibration curve is established, analyze the QCS. If the measured value for the QCS is not within the specified limits (Sect. 10.2.2), refer to Sect. 10.4.

11.4 SAMPLE INJECTION

11.4.1 Use the same size injection loop for both standards and samples. Samples may be injected manually with a syringe or with an autosampler.

11.4.2 Flush the sampling system thoroughly with each new sample using a rinse volume of at least ten times the loop size. Inject the sample, avoiding the introduction of air bubbles into the system.

11.4.3 Record the resulting peak heights or areas.

11.5 If the peak height or area response exceeds the working range of the system, dilute the sample with zero standard and reanalyze.

11.6 Sample chromatograms are provided in Figures 2 and 3.

12. CALCULATIONS

12.1 For each analyte of interest, calculate a linear least squares fit of the standard concentrations as a function of the measured peak height or area. The linear least squares equation is expressed as follows:

$$y = B_0 + B_1 x$$

where: y = standard concentration in mg/L
x = peak height or area measured
B_0 = y-intercept calculated from: $\bar{y} - B_1\bar{x}$
B_1 = slope calculated from:

$$\sum_{i=1}^{n} (x_i - \bar{x})(y_i - \bar{y}) / \sum_{i=1}^{n} (x_i - \bar{x})^2$$

where: $\bar{x}$ = mean of peak height or area measured
$\bar{y}$ = mean of standard concentrations
n = number of samples

The correlation coefficient should be 0.9990 or greater. Determine the concentration of analyte of interest from the calibration curve.

12.2 If the relationship between standard concentration and measured peak height or area is nonlinear, use a second degree polynomial least squares equation to derive a curve with a correlation $\geq$0.9990. The second degree polynomial equation is expressed as follows:

$$y = B_2 x^2 + B_1 x + B_0$$

A computer is necessary for the derivation of this function. Determine the concentration of analyte of interest from the calibration curve.

12.3 An integration system may also be used to provide a direct readout of the concentration of the analyte of interest.

12.4 Report data in mg/L as Na^+, NH_4^+, K^+, Mg^{+2}, and Ca^{+2}. Do not report data lower than the lowest calibration standard.

13. PRECISION AND BIAS

13.1 The mean percent recovery and mean bias of this method were determined from the analysis of spiked wet deposition samples according to ASTM Standard Practice D4210, Annex A4 (14.7). The results are summarized in Table 3. No statistically significant biases were found for any of the five inorganic cations.

13.2 Single-operator precision and bias were obtained from the analysis of quality control check samples that approximated the levels common to wet deposition samples. These results reflect the accuracy that can be expected when the method is used by a competent operator. These data are presented in Table 4.

14. REFERENCES

14.1 Annual Book of ASTM Standards, Part 31, "Definitions of Terms Related to Water," Standard D 1129-82b, 1982, p. 4.

14.2 Annual Book of ASTM Standards, Part 31, "Excerpts from Standard for Metric Practice," Standard E 380-79, 1982, pp. 679-694.

14.3 "Safety in Academic Chemistry Laboratories," American Chemical Society Publication, Committee on Chemical Safety, 3rd Edition, 1979.

14.4 Annual Book of ASTM Standards, Part 31, "Standard Specification for Reagent Water," Standard D 1193-77, 1982, p. 39.

14.5 Peden, M. E. and Skowron, L. M., "Ionic Stability of Precipitation Samples," Atmos. Environ. 12, 1978, pp. 2343-2349.

14.6 Topol, L. E., Lev-On, M., Flanagan, J., Schwall, R. J., Jackson, A. E., Quality Assurance Manual for Precipitation Measurement Systems, 1985, U.S. Environmental Protection Agency, Environmental Monitoring Systems Laboratory, Research Triangle Park, NC 27711.

14.7 Annual Book of ASTM Standards, Section 11, Vol. 11.01 (1), "Practice for Interlaboratory Quality Control Procedures and a Discussion of Reporting Low-Level Data," Standard D4210 Annex A4, 1983, pp. 15-16.

Table 1. Method Detection Limits and Concentration Ranges for Chemically Suppressed Ion Chromatographic Determination of Cations in Wet Deposition.

Analyte	Method Detection Limit,[a] mg/L	Concentration Range, mg/L
Sodium	0.03	0.03 - 1.00
Ammonium (as NH_4^+)	0.03	0.03 - 2.00
Potassium	0.01	0.01 - 1.00
Magnesium	0.02	0.02 - 1.00
Calcium	0.02	0.02 - 3.00

a. Chromatographic Conditions:
Guard Column -- Dionex CG1
Separator Column -- Dionex CS1
Fiber Suppressor Column -- Dionex CFS
Detector -- As specified in 6.1.5
Eluent -- As specified in 7.3
Sample Loop -- 100 uL
Flow Rate -- 2.3 mL/min
Detector Sensitivity -- 10 uS/cm

Table 2. Retention Times and Suggested Calibration Standard Concentrations for the Determination of Cations in Wet Deposition.[a]

Analyte	Approximate Retention Time Range,[b] sec	Calibration Standards, mg/L
Sodium	276 - 336	zero
		0.03
		0.25
		0.50
		0.75
		1.00
Ammonium (as NH_4^+)	432 - 512	zero
		0.03
		0.25
		0.50
		0.75
		1.00
Potassium	528 - 636	zero
		0.01
		0.05
		0.10
		0.20
		0.25
Magnesium	144 - 204	zero
		0.02
		0.10
		0.15
		0.20
		0.30
Calcium	252 - 324	zero
		0.02
		0.40
		0.75
		1.10
		1.50

a. Based on the MDL and 95th percentile concentrations of each analyte obtained from analyses of over five thousand wet deposition samples from the NADP/NTN precipitation network.

b. The retention time was measured from the time of injection. For chromatographic conditions, refer to Table 1.

Table 3. Single-Operator Precision and Bias for Sodium, Ammonium, Potassium, Magnesium, and Calcium Determined from Analyte Spikes of Wet Deposition Samples.[a]

Analyte	Amount Added, mg/L	n[b]	Mean Percent Recovery	Mean Bias, mg/L	Standard Deviation, mg/L	Statistically Significant Bias?[c]
Sodium	0.108	10	95.3	-0.001	0.010	No
	0.273	9	94.4	-0.015	0.010	No
Ammonium	0.188	10	113.8	0.026	0.030	No
	0.473	9	107.5	0.035	0.025	No
Potassium	0.014	8	157.1	0.008	0.009	No
	0.034	8	132.4	0.011	0.016	No
Magnesium	0.018	9	89.5	-0.002	0.004	No
	0.044	9	92.3	-0.003	0.002	No
Calcium	0.079	10	93.9	-0.005	0.008	No
	0.199	10	97.1	-0.008	0.014	No

a. Concentrations are significant to two decimal places. For chromatographic conditions, refer to Table 1.
b. Number of replicates
c. 95% Confidence Level

Table 4. Single-Operator Precision and Bias for Sodium, Ammonium, Potassium, Magnesium, and Calcium Determined from Quality Control Check Samples.[a]

Analyte	Theoretical Concentration, mg/L	Measured Concentration, mg/L	n[b]	Bias, mg/L	Bias, %	Precision, s, mg/L	Precision, RSD, %
Sodium	0.082	0.090	7	0.008	9.8	0.009	10.0
	0.465	0.454	7	-0.011	-2.4	0.019	4.2
Ammonium	0.063	0.067	7	0.004	6.4	0.011	16.4
	0.400	0.400	7	0.000	0.0	0.032	8.0
Potassium	0.021	0.024	7	0.003	14.3	0.004	16.7
	0.098	0.098	7	0.000	0.0	0.005	5.1
Magnesium	0.018	0.026	7	0.008	44.4	0.008	30.8
	0.084	0.085	7	0.001	1.2	0.018	21.2
Calcium	0.053	0.058	7	0.005	9.4	0.006	10.3
	0.406	0.405	7	-0.001	-0.2	0.045	11.1

a. Concentrations are significant to two decimal places. For chromatographic conditions, refer to Table 1.
b. Number of replicates.

Figure 1. Percentile Concentration Values Obtained from Wet Deposition Samples: Sodium, Ammonium, Potassium, Magnesium, and Calcium.

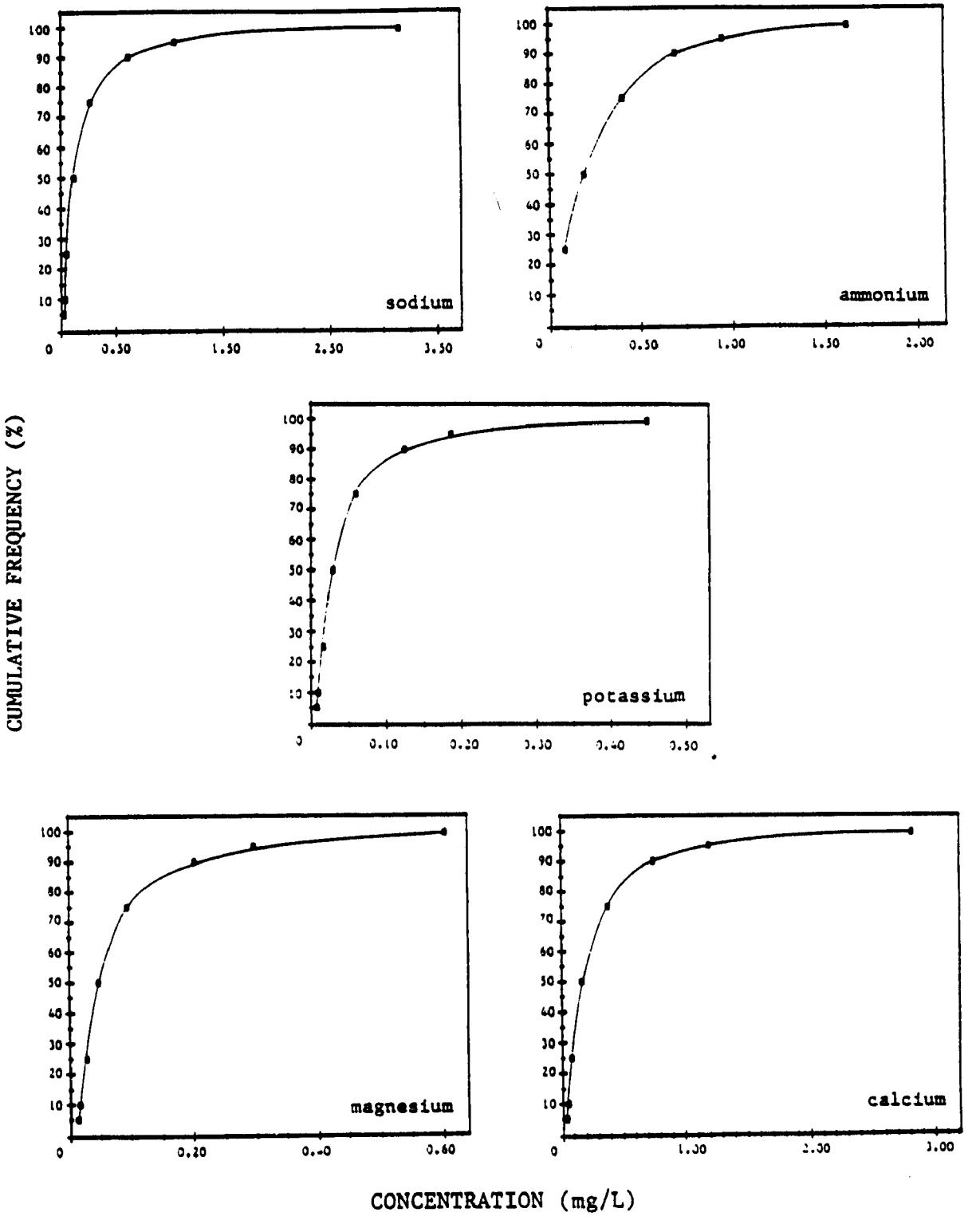

Figure 2. Chromatogram of a Calibration Standard Containing Sodium, Ammonium, and Potassium.

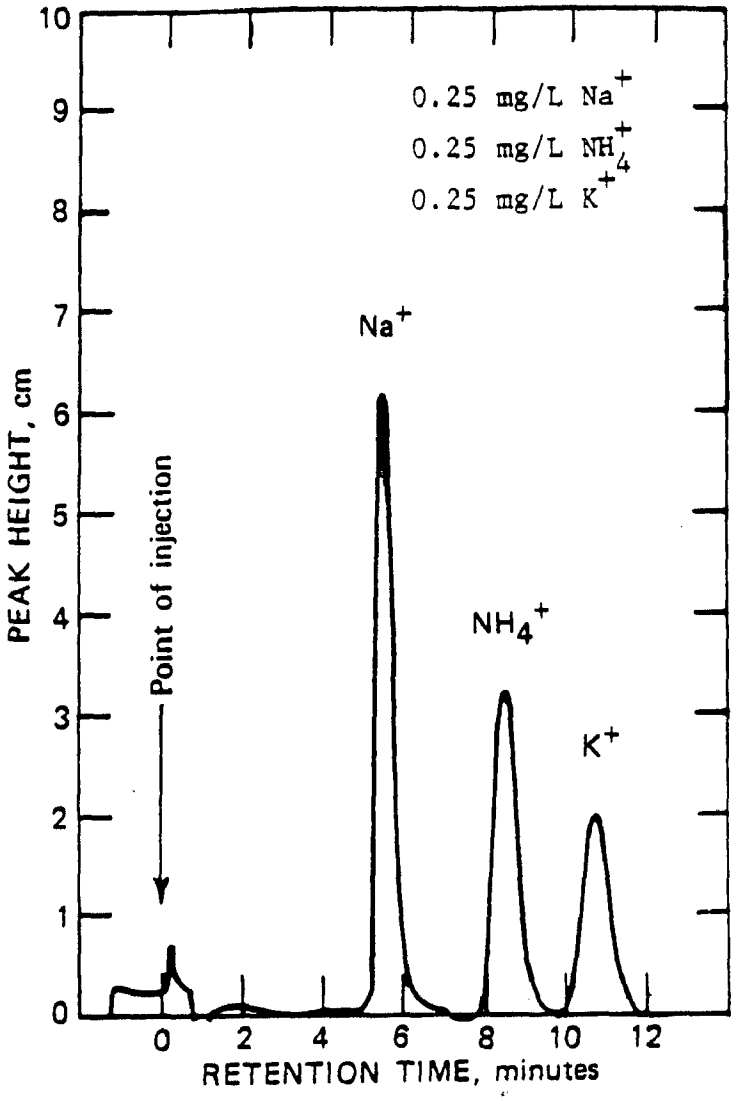

Chromatographic Conditions:
- Guard Column -- Dionex CG1
- Separator Column -- Dionex CS1
- Fiber Suppressor Column -- Dionex CFS
- Detector -- As specified in 6.1.5
- Eluent -- As specified in 7.3
- Sample Loop -- 100 uL
- Flow Rate -- 2.3 mL/min
- Detector Sensitivity -- 10 µS/cm

Figure 3. Chromatogram of a Calibration Standard Containing Magnesium and Calcium.

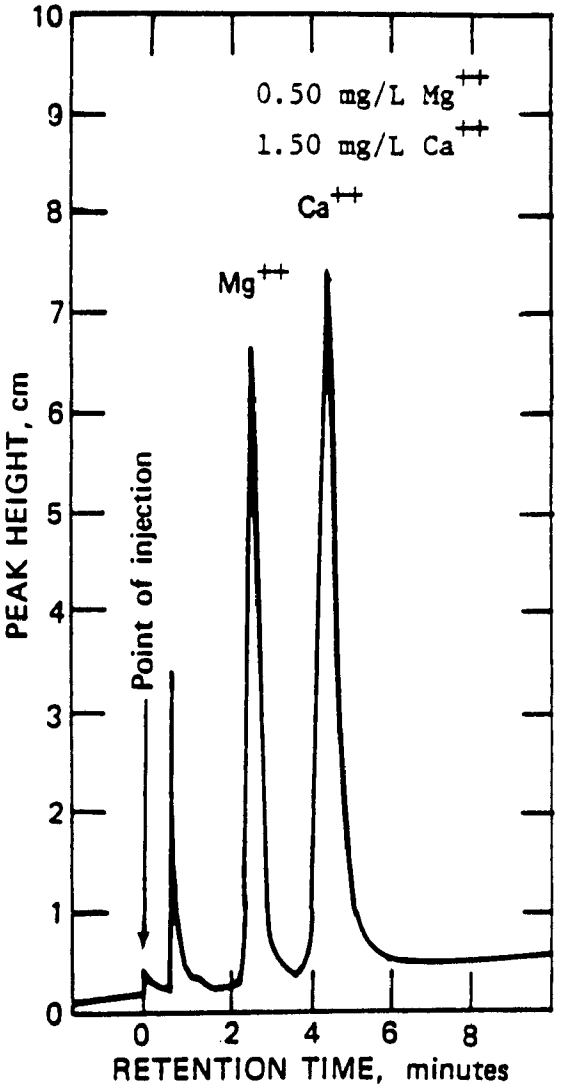

Chromatographic Conditions:

- Guard Column -- Dionex CG1
- Separator Column -- Dionex CS1
- Fiber Suppressor Column -- Dionex CFS
- Detector -- As specified in 6.1.5
- Eluent -- As specified in 7.3
- Sample Loop -- 100 µL
- Flow Rate -- 2.3 mL/min
- Detector Sensitivity -- 10 µS/cm

Appendix G

METHOD 375.6 -- SULFATE IN WET DEPOSITION BY AUTOMATED COLORIMETRIC DETERMINATION USING BARIUM-METHYLTHYMOL BLUE

Method 375.6 -- Sulfate in Wet Deposition by Automated Colorimetric Determination Using Barium-Methylthymol Blue

March 1986

Performing Laboratory:

Susan R. Bachman
Michael J. Slater
Carla Jo Brennan
Mark E. Peden

Illinois State Water Survey
Analytical Chemistry Unit
2204 Griffith Drive
Champaign, Illinois 61820

Sponsoring Agency:

John D. Pfaff, Project Officer

Inorganic Analysis Section
Physical and Chemical Methods Branch
United States Environmental Protection Agency
Office of Research and Development
Environmental Monitoring and Support Laboratory
Cincinnati, Ohio 45268

INDEX

Section Number	Subject
1	Scope and Application
2	Summary of Method
3	Definitions
4	Interferences
5	Safety
6	Apparatus and Equipment
7	Reagents and Consumable Materials
8	Sample Collection, Preservation, and Storage
9	Calibration and Standardization
10	Quality Control
11	Procedure
12	Calculations
13	Precision and Bias
14	References

TABLES

1. Single-Operator Precision and Bias for Sulfate Determined from Analyte Spikes of Wet Deposition Samples.
2. Single-Operator Bias and Precision for Sulfate Determined from Quality Control Check Samples.

FIGURES

1. Percentile Concentration Values Obtained from Wet Deposition Samples: Sulfate.
2. Sulfate Sampling and Analytical System -- Segmented Flow.

1. SCOPE AND APPLICATION

1.1 This method is applicable to the automated colorimetric determination of sulfate in wet deposition samples by barium-methylthymol blue reaction.

1.2 The term "wet deposition" is used in this method to designate rain, snow, dew, sleet, and hail.

1.3 The method detection limit (MDL) determined from replicate analyses of a quality control check solution containing 0.36 mg/L sulfate is 0.05 mg/L. The concentration range of this method is 0.05-6.00 mg/L as SO_4^{2-}

1.4 Figure 1 represents a cumulative frequency percentile sulfate concentration plot obtained from analyses of over five thousand wet deposition samples. These data may be used as an aid in the selection of calibration standard concentrations.

2. SUMMARY OF METHOD

2.1 A sample is pumped through an ion exchange column for the removal of interfering cations, and then reacted with barium chloride at pH 2.5-3.0 to form barium sulfate. To enhance the complexation of barium with methylthymol blue (MTB), sodium hydroxide is added to increase the pH to approximately 12.5. Excess barium ions react with an equivalent concentration of MTB to form a blue-colored chelate. The concentration of unchelated MTB ions is related to the initial sulfate ion concentration. Therefore, the intensity of the blue-colored chelate is inversely proportional to the concentration of sulfate in solution. After color reduction, a flowcell receives the stream for measurement. A light beam of a wavelength characteristic of the blue-colored chelate is passed through the solution. The light energy measured by a photodetector is inversely related to the concentration of sulfate in the sample. A calibration curve is constructed using standard solutions containing known concentrations of sulfate. From this curve, the concentration of sulfate in a wet deposition sample is determined.

3. DEFINITIONS

3.1 COLORIMETRY -- the measurement of light transmitted by a colored complex as a function of concentration.

3.2 ION EXCHANGE -- a reversible process by which ions are interchanged between an insoluble material and a liquid with no substantial structural changes of the material (14.1).

3.3 For definitions of other terms used in these methods, refer to the glossary. For an explanation of the metric system including units, symbols, and conversion factors see American Society for Testing and Materials (ASTM) Standard E 380, "Metric Practices" (14.2).

4. INTERFERENCES

4.1 Sample color absorbing in the wavelength range of 450-470 nm will reduce the measured concentration of sulfate in the sample. Wet deposition samples are generally colorless, therefore, this type of interference is rare.

4.2 Phosphate at concentrations as low as 0.01 mg/L will complex with the methylthymol blue reagent to result in a positive bias. Sulfite may be oxidized to sulfate to yield a positive bias.

4.3 Cations such as calcium, aluminum, and iron that may also interfere by complexing with the methylthymol blue reagent are removed by the ion exchange column. If the ion exchange column capacity is exceeded, the interfering cations are not completely removed and a new column must be prepared.

4.4 The presence of air bubbles in the ion exchange column results in incomplete removal of the interfering cations and is evidenced by an unstable baseline. Eliminate this interference by preparing the column carefully in accordance with the details provided in Sect. 11.1.

5. SAFETY

5.1 The calibration standards, sample types, and most reagents used in this method pose no hazard to the analyst. Use a fume hood, protective clothing, and safety glasses when handling concentrated hydrochloric acid (Sect. 7.5) and sodium hydroxide (Sect. 7.9).

5.2 Follow American Chemical Society guidelines regarding the safe handling of chemicals used in this method (14.3).

6. APPARATUS AND EQUIPMENT

6.1 AUTOMATED COLORIMETRIC INSTRUMENT -- Select and assemble an analytical system consisting of the following:

6.1.1 Sampler.

6.1.2 Proportioning Pump.

6.1.3 Analytical Cartridge.

6.1.3.1 Ion Exchange Column -- Flexible polyolefin tubing or glass tubing having a length of 15 to 20 cm with an inside diameter equal to the tubing in the rest of the system. Prepare the ion exchange column according to the procedure in Sect. 11.1.

6.1.4 Colorimeter with a 460 nm wavelength setting. Ensure that the colorimeter is equipped with photodetectors having maximum sensitivity at this wavelength setting. A 15 mm flow cell is adequate to achieve the MDL stated in Sect. 1.3. A 50 mm flow cell may be selected to increase sensitivity.

6.1.5 Strip Chart Recorder (or other data acquisition device).

6.1.6 Printer (optional).

6.2 Wherever possible, use glass transmission lines with an inside diameter of 1.85 mm (0.073 inches) in the analytical cartridge and colorimeter. Glass yields a more uniform sample flow and does not degrade as quickly as other tubing materials. When connecting two glass lines, ensure that the ends are abutted. To minimize pulsing of the analytical stream, maintain uniform inside diameter throughout all transmission tubing. Minimize the length of all transmission tubing to optimize the performance of the hydraulic system.

6.4 Enclose the sampler with a dust cover to prevent contamination.

6.5 To prevent the intake of any precipitates from the reagents, install intake filters at the end of the transmission lines that are used to transport the reagents from their respective containers to the proportioning pump.

6.6 LABORATORY FACILITIES -- Laboratories used for the analysis of wet deposition samples should be free from external sources of contamination. The use of laminar flow clean air workstations is recommended for sample processing and preparation to avoid the introduction of airborne contaminants. Samples should always be capped or covered prior to analysis. A positive pressure environment within the laboratory is also recommended to minimize the introduction of external sources of contaminant gases and particulates. Windows within the laboratory should be kept closed at all times and sealed if air leaks are apparent. The use of disposable tacky floor mats at the entrance to the laboratory is helpful in reducing the particulate loading within the room.

7. REAGENTS AND CONSUMABLE MATERIALS

7.1 PURITY OF REAGENTS -- Use reagent grade chemicals for all solutions. All reagents shall conform to the specifications of the Committee on Analytical Reagents of the American Chemical Society (ACS), where such specifications are available.

7.2 PURITY OF WATER -- Use water conforming to ASTM Specification D 1193, Type II (14.4). Point of use 0.2 micrometer filters are recommended for all faucets supplying water to prevent the introduction of bacteria and/or ion exchange resins into reagents, standard solutions, and internally formulated quality control check solutions.

7.3 BARIUM CHLORIDE SOLUTION -- Dissolve 1.526 g of barium chloride ($BaCl_2 \cdot H_2O$) in water (Sect. 7.2) and dilute to 1 L. Store at room temperature in an amber high density polyethylene or polypropylene container.

7.4 ETHANOL (C_2H_5OH, Et-OH) -- 95% volume/volume.

7.5 HYDROCHLORIC ACID (1.0 N) -- Add 83.0 mL of concentrated hydrochloric acid (HCl, sp gr 1.19) to 900 mL of water (Sect. 7.2) and dilute to 1 L.

7.6 ION EXCHANGE RESIN -- Analytical grade carboxylic cation exchange resin with a 20 to 50 mesh; sodium form.

7.7 METHYLTHYMOL BLUE REAGENT (MTB) -- Add 25 mL of the barium chloride solution to 0.1182 g of methylthymol blue (3'3"-Bis-N, N-bis (carboxymethyl)- amino methylthymolsulfonephthalein pentasodium salt). Add 4 mL of 1 N HCl to the solution, mix well, add 71 mL of water (Sect. 7.2) , and 0.5 mL of Brij-35 or a similar wetting agent. Mix and dilute to 500 mL with 95% EtOH. Prepare daily.

7.8 SAMPLER RINSE WATER -- Add 0.5 mL Brij-35 or a similar wetting agent to 1 L of water (Sect. 7.2).

7.9 SODIUM HYDROXIDE SOLUTION (0.18 N) -- Dissolve 7.2 g of sodium hydroxide (NaOH) in 900 mL of water (sect. 7.2), add 0.5 mL of Brij-35 or a similar wetting agent and dilute to 1 L. Store at room temperature in a high density polyethylene or polypropylene container.

7.10 SULFATE SOLUTION, STOCK (1.0 mL = 1.0 mg SO_4) -- The stock solution may be purchased as a certified solution or prepared from ACS reagent grade materials. To prepare, dissolve 1.4789 g of sodium sulfate (Na_2SO_4), dried at 105°C for one hour, in water (Sect. 7.2) and dilute to 1 L. This solutions is stable for one year when stored in a high density polyethylene or polypropylene container at 4°C.

7.11 SAMPLE CONTAINERS -- Use polyolefin sample cups or glass test tubes that have been rinsed thoroughly with water (Sect. 7.2) before use.

8. SAMPLE COLLECTION, PRESERVATION AND STORAGE

8.1 Collect samples in high density polyethylene (HDPE) containers that have been thoroughly rinsed with ASTM Type II water (7.2). Do not use strong mineral acids or alkaline detergent solutions for cleaning collection vessels. Residual acids may remain in the polyethylene matrix and slowly leach back into the sample. Alkaline detergents may also leave residues that may affect the sample chemistry. Cap collection bottles after cleaning to prevent contamination from airborne contaminants; air dry collection buckets in a laminar flow

clean air workstation and wrap in polyethylene bags prior to use. If a laminar flow workstation is not available, pour out any residual rinse water and bag the buckets immediately. Do not dry the bucket interior by any method other than air drying in a laminar flow clean air workstation.

8.2 The frequency of sample collection and the choice of sampler design are dependent on the monitoring objectives. In general, the use of wet-only samplers is recommended to exclude dry deposition contributions, minimize sample contamination, retard evaporation, and enhance sample stability. Sample collection frequency may vary from subevent to monthly sampling periods. Collection periods of more than one week are not recommended since sample integrity may be compromised by longer exposure periods.

8.3 The oxidation of sulfite to sulfate after sample collection will increase the concentration of SO_4^{-2} in stored samples. Sample measurements should be made immediately after collection if possible. Refrigeration of samples at 4°C will minimize, but not eliminate concentration changes prior to chemical analysis.

9. CALIBRATION AND STANDARDIZATION

9.1 INSTRUMENT OPTIMIZATION

9.1.1 For a segmented flow system with a concentration range from 0.05-6.00 mg/L as sulfate, assemble the sampling and analytical system as shown in Figure 2.

9.1.2 Prepare the ion exchange column according to Sect. 11.1.

9.1.3 Silicone is more resistant to the effects of ethanol, therefore, use flow rated silicone transmission and pump tubing to transport the methylthymol blue reagent from the reagent source to the analytical stream. Use silicone tubing to transport the sample from the flow cell through the pump and to waste. Elsewhere, use flow rated polyvinyl chloride or polyethylene pump and transmission tubing throughout the sampling and analytical system. Check the tubing for chemical buildup, splits, cracks, and deformations before beginning each day's analysis. Change pump tubes after 50 hours of operation. Change transmission tubing after 100 hours of operation or when uneven flow patterns are observed.

9.1.4 Optimize the tension of pump tubes according to manufacturer's recommendations.

9.1.5 Set the wavelength of the colorimeter to 460 nm. Allow the colorimeter to warm up for 30 minutes while pumping sampler rinse water and reagents through the system. After a stable baseline has been obtained, adjust the recorder to maximize the full-scale response.

9.1.6 Sample at a rate of 30 samples/hour with a 1:4 sample to rinse ratio. This sampling rate provides good peak separation. Adjust the colorimeter to maximize sensitivity while minimizing instrument noise. Refer to the manufacturer's recommendations.

9.2 CALIBRATION SOLUTIONS

9.2.1 Five calibration solutions and one zero standard are needed to generate a suitable calibration curve. The lowest calibration solution should contain sulfate at a concentration greater than or equal to the method detection limit. The highest solution should approach the expected upper limit of concentration of sulfate in wet deposition. Prepare the remaining solutions such that they are evenly distributed throughout the concentration range. Suggested calibration standards for sulfate are as follows: zero, 0.05, 1.50, 3.00, 4.50, and 6.00 mg/L as SO_4^{-2}.

9.2.2 Prepare all calibration standards by diluting the stock standard (Sect. 7.10) with water (Sect. 7.2). Use glass (Class A) or plastic pipettes that are within the bias and precision tolerances specified by the manufacturer. The standards are stable for one month if stored at room temperature in high density polyethylene or polypropylene containers.

9.3 CALIBRATION CURVE

9.3.1 Analyze the standard containing the highest concentration of sulfate and adjust the colorimeter calibration control to achieve full-scale deflection on the recorder. Use the zero standard to establish a baseline. If a printer is used, adjust it to read the correct concentration. Analyze all the standards and construct a calibration curve according to Sect. 12. After every 30 samples and at the end of the day's analyses, reconstruct the entire calibration curve.

9.3.2 Verify the calibration curve after every ten samples and at the end of each day's analyses according to Sect. 10.5.

10. QUALITY CONTROL

10.1 Each laboratory using this method should develop formalized quality control protocols to continually monitor the bias and precision of all measurements. These protocols are required to ensure that the measurement system is in a state of statistical control. Estimates of bias and precision for wet deposition analyses cannot be made unless these control procedures are followed. Detailed guidelines for the development of quality assurance and quality control protocols for wet deposition measurement systems are published in a manual available from the United States Environmental Protection Agency, Research Triangle Park, NC 27711 (14.5). Included in this manual are procedures for the development of statistical control

charts for use in monitoring bias and precision as well as recommendations for the introduction of reagent blanks, laboratory duplicates, field duplicates, spike samples, and performance evaluation samples. These guidelines are to be used by all laboratories involved with wet deposition measurements.

10.2 ESTABLISHMENT OF WARNING AND CONTROL LIMITS -- Warning and control limits are used to monitor drift in the calibration curve, analyses of quality control check samples (QCS), and measured recoveries from laboratory spikes.

10.2.1 Calibration Curve -- After a calibration curve has been constructed according to Sect. 12, reanalyze additional aliquots of the low and high concentration standards. Calculate the concentrations using the previously derived calibration curve. Repeat this procedure until at least ten determinations at each concentration level have been made. These data should be collected on ten different days to provide a realistic estimate of the method variability. Calculate a standard deviation (s) at each concentration level. Use the nominal standard concentration as the mean value ($\bar{x}$) for determining the control limits. A warning limit of $\bar{x} \pm 2s$ and a control limit of $\bar{x} \pm 3s$ should be used. Reestablish these limits whenever instrumental operating conditions change.

10.2.2 Quality Control Check Samples (QCS) -- Calculate warning and control limits for QCS solutions from a minimum of ten analyses performed on ten days. Use the calculated standard deviation (s) at each QCS concentration level to develop the limits as described in Sect. 10.2.1. Use the certified or NBS traceable concentration as the mean (target) value. Constant positive or negative measurements with respect to the true value are indicative of a method or procedural bias. Utilize the data obtained from QCS measurements as in Sect. 10.4 to determine when the measurement system is out of statistical control. The standard deviations used to generate the QCS control limits should be comparable to the single operator precision reported in Table 2. Reestablish new warning and control limits whenever instrumental operating conditions are varied or QCS concentrations are changed.

10.2.3 Laboratory Spike Solutions -- A minimum of ten analyte spikes of wet deposition samples is required to develop a preliminary data base for the calculation of warning and control limits for spike recovery data. Select the spike concentration such that the working range of the method will not be exceeded. Samples selected for the initial spike recovery study should represent the concentration range common to wet deposition samples in order to reliably estimate the method accuracy. Calculate a mean and standard deviation of the percent recovery data using the formulas provided in the glossary. Determine warning and

control limits using ±2s and ±3s, respectively. If the data indicate that no significant method bias exists (14.6), the 100 percent recovery is used as the mean percent recovery. Where a significant bias is determined at the 95% confidence level, the control limits are centered around the bias estimate. Routine spiked sample analyses that yield percent recovery data outside of the control limits are an indication of matrix interferences that should be resolved before routine analyses are continued.

10.2.4 All warning and control limits should be reevaluated on a continual basis as additional data are collected during routine analyses. The limits should be broadened or narrowed if a recalculated standard deviation under similar operating conditions provides a different estimate of the procedure variability.

10.3 Monitor the cleaning procedure by pouring a volume of water (Sect. 7.2) that approximates the median sample size into the collection vessel. Allow the water to remain in the sealed or capped collection container for at least 24 hours and determine the sulfate concentration. If the solution concentration exceeds the MDL, a contamination problem is indicated in the cleaning procedure. Take corrective action before the sampling containers are used for the collection of wet deposition.

10.4 Analyze a quality control check sample (QCS) after the calibration curve has been established. This sample may be formulated in the laboratory or obtained from the National Bureau of Standards (NBS Standard Reference Material 2694, Simulated Rainwater). Verify the accuracy of internally formulated QCS solutions with an NBS traceable standard before acceptance as a quality control check. The check sample(s) selected must be within the range of the calibration standards. If the measured value for the QCS falls outside of the ±3s limits (Sect. 10.2.2), or if two successive QCS checks are outside of the ±2s limits, a problem is indicated with the system or the calibration procedure. Corrective action should be initiated to bring the results of the QCS within the established control limits. Plot the data obtained from the QCS checks on a control chart for routine assessments of bias and precision.

10.5 Verify the calibration curve after a maximum of ten samples and at the end of each day's analyses. Analyze calibration standards at the low and high ends of the working range. If the routine calibration checks do not meet the criteria described in Sect. 10.4, recalibrate the system and reanalyze all samples from the last time the system was in control. Verify the new calibration curve with the QCS according to Sect. 10.4 and reanalyze all samples measured since the last time the system was in control.

10.6 Submit a Field Blank (FB) to the laboratory for every 20 samples. The FB may consist of a water sample (Sect. 7.2) or a known reference solution that approximates the concentration levels characteristic of wet deposition. The FB is poured into the sampling vessel at the field site and undergoes identical processing and analytical protocols as the wet deposition sample(s). Use the analytical data obtained from the FB to determine any contamination introduced in the field and laboratory handling procedures. The data from the known reference solution can be used to calculate a system precision and bias.

10.7 Prepare and analyze a laboratory spike of a wet deposition sample according to the guidelines provided in "Quality Assurance Manual for Precipitation Measurement Systems" (14.5). Compare the results obtained from spiked samples to those obtained from identical samples to which no spikes were added. Use these data to monitor the method percent recovery as described in Sect. 10.2.3.

10.8 Participation in performance evaluation studies is recommended for wet deposition chemistry laboratories. The samples used for these performance audits should contain the analytes of interest at concentrations within the normal working range of the method. The true values are unknown to the analyst. Performance evaluation studies for wet deposition chemistry laboratories are conducted semiannually by the USEPA Performance Evaluation Branch, Quality Assurance Division, Research Triangle Park, NC 27711.

11. PROCEDURE

11.1 ION EXCHANGE COLUMN

11.1.1 Soak the ion exchange resin overnight in water (Sect. 7.2). Stir the slurry and decant particles smaller than 50 mesh. Store the resin in water (Sect. 7.2) in a glass or polyolefin container until the column is prepared.

11.1.2 Insert a small plug of teflon screen in one end of the column tube. To prevent the entrapment of air bubbles, fill the column with resin using a syringe or pipette attached to the same tube end and draw the resin and water mixture into the tube.

11.1.3 Do not allow air to enter the column. Do not let the resin dehydrate. Air bubbles entering the analytical stream will result in an unstable baseline. If air enters the column, repeat the procedure from Sect. 11.1.2.

11.1.4 To prevent the introduction of air, insert the column in the analytical stream while the system is pumping.

11.1.5 Prepare the column daily or whenever air enters the column.

11.2 Optimize the instrument each day according to Sect. 9.1.

11.3 Prepare all standards and construct a calibration curve according to Sect. 9.2 and 9.3.

11.4 After the calibration curve is established, analyze the QCS. If the measured value for the QCS is not within the specified limits (Sect. 10.2.2), refer to Sect. 10.4.

11.5 Load the sampler tray and begin analysis.

11.6 If the peak height response exceeds the working range of the system, dilute the sample with zero standard and reanalyze.

11.7 When analysis is complete, rinse the system with sampler rinse water (Sect. 7.8) for 15 minutes. Before changing the pump tubes, rinse a dilute concentration of HCl (1.0 N) through the system for 15 minutes to clean the mixing coils and flow cell. If the baseline appears unstable or sensitivity decreases it may be necessary to repeat this procedure more often than after 50 hours of operation.

12. CALCULATIONS

12.1 The relationship between standard concentration and measured peak height for sulfate deviates from Beer's Law. Use a second-degree polynomial least squares equation to derive a curve with a correlation ≥ 0.9990. The second degree polynomial equation is expressed as follows:

$$y = B_2x^2 + B_1x + B_0$$

A computer is necessary for the derivation of this function. Determine the concentration of sulfate from the calibration curve.

12.2 An integration system may also be used to provide a direct readout of the concentration of sulfate.

12.3 Report data in mg/L as SO_4^{-2}. Do not report data lower than the lowest calibration standard.

13. PRECISION AND BIAS

13.1 The mean percent recovery and mean bias of this method were determined from the analysis of spiked wet deposition samples according to ASTM Standard Practice D4210, Annex A4 (14.6). The results are summarized in Table 1. No statistically significant biases were found.

13.2 Single-operator precision and bias were obtained from the analysis of quality control check samples that approximated the levels common to wet deposition samples. These results reflect the accuracy that can be expected when the method is used by a competent operator. These data are presented in Table 2.

14. REFERENCES

14.1 Annual Book of ASTM Standards, Part 31, "Definitions of Terms Relating to Water," Standard D 1129-82b, 1982, p. 5.

14.2 Annual Book of ASTM Standards, Part 31, "Excerpts from Standard for Metric Practice," Standard E 380-79, 1982, pp. 679-694.

14.3 "Safety in Academic Chemistry Laboratories," American Chemical Society Publication, Committee on Chemical Safety, 3rd Edition, 1979.

14.4 Annual Book of ASTM Standards, Part 31, "Standard Specification for Reagent Water," Standard D 1193-77, 1982, p. 39.

14.5 Topol, L. E., Lev-On, M., Flanagan, J., Schwall, R. J., Jackson, A. E., Quality Assurance Manual for Precipitation Measurement Systems, 1985, U.S. Environmental Protection Agency, Environmental Monitoring Systems Laboratory, Research Triangle Park, NC 27711.

14.6 Annual Book of ASTM Standards, Section 11, **Vol. 11.01 (1)**, "Practice for Intralaboratory Quality Control Procedures and a Discussion of Reporting Low-Level Data," Standard D4210 Annex A4, 1983, pp. 15-16.

Table 1. Single-Operator Precision and Bias for Sulfate Determined from Analyte Spikes of Wet Deposition Samples.

Analyte	Amount Added, mg/L	n[a]	Mean Percent Recovery	Mean Bias, mg/L	Standard Deviation, mg/L	Statistically Significant Bias?[b]
Sulfate	1.0	10	100.1	0.0	0.1	No
	2.6	9	107.3	0.2	0.1	No

a. Number of replicates
b. 95% Confidence Level

Table 2. Single-Operator Bias and Precision for Sulfate Determined from Quality Control Check Samples.

Theoretical Concentration, mg/L	Measured Concentration, mg/L	n[a]	Bias, mg/L	Bias, %	Precision, s, mg/L	Precision, RSD, %
0.94	0.90	170	-0.04	-4.2	0.06	6.7
7.20	7.13	172	-0.07	-0.97	0.11	1.5

The above data were obtained from records of measurements made under the direction of the NADP/NTN quality assurance program.

a. Number of replicates

Figure 1. Percentile Concentration Values Obtained from Wet Deposition Samples: Sulfate

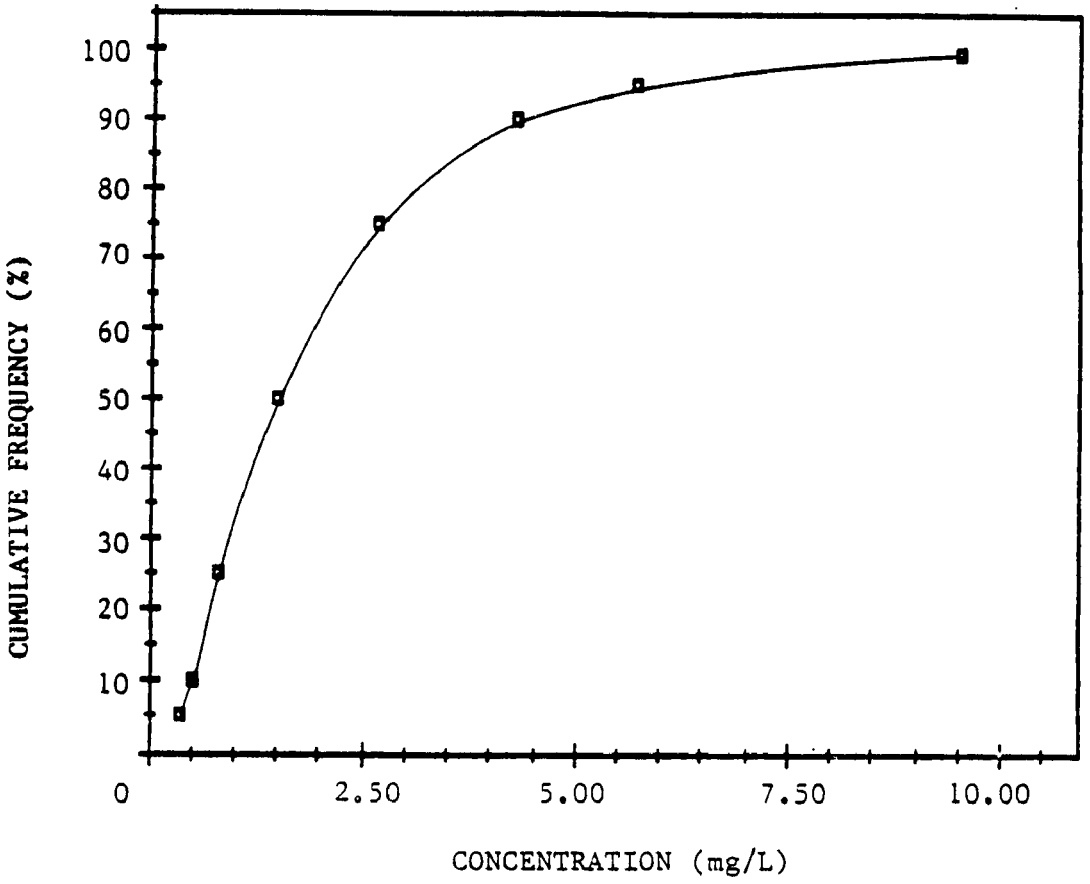

Figure 2. Sulfate Sampling and Analytical System -- Segmented Flow.

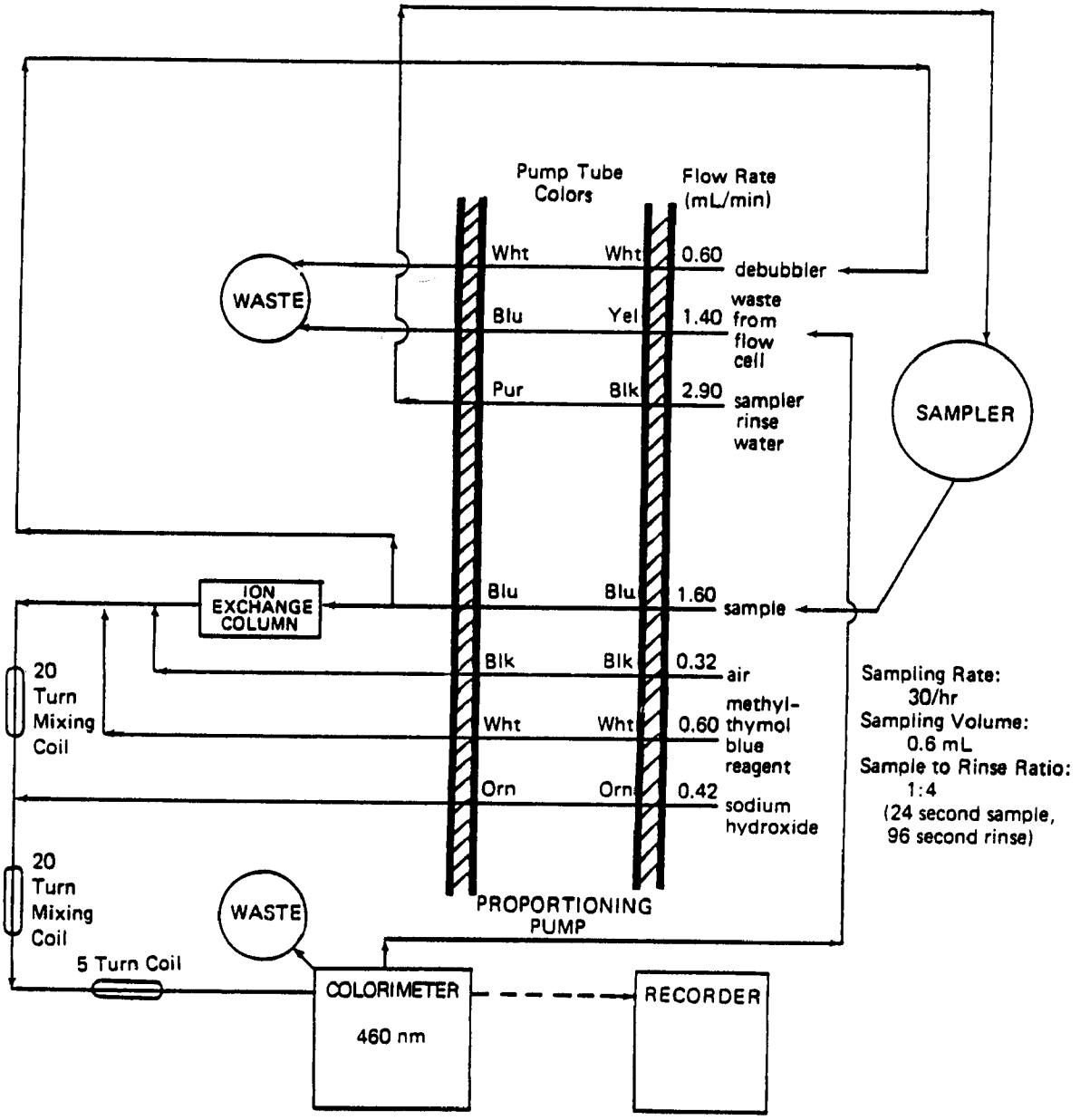

Appendix H

METHOD 353.6 -- NITRATE-NITRITE IN WET DEPOSITION BY AUTOMATED COLORIMETRIC DETERMINATION USING CADMIUM REDUCTION

Method 353.6 -- Nitrate-Nitrite in Wet Deposition by Automated Colorimetric Determination using Cadmium Reduction

March 1986

Performing Laboratory:

Brigita Demir
Susan R. Bachman
Carla Jo Brennan
Mark E. Peden

Illinois State Water Survey
Analytical Chemistry Unit
2204 Griffith Drive
Champaign, Illinois 61820

Sponsoring Agency:

John D. Pfaff, Project Officer

Inorganic Analysis Section
Physical and Chemical Methods Branch
United States Environmental Protection Agency
Office of Research and Development
Environmental Monitoring and Support Laboratory
Cincinnati, Ohio 45268

INDEX

Section Number	Subject
1	Scope and Application
2	Summary of Method
3	Definitions
4	Interferences
5	Safety
6	Apparatus and Equipment
7	Reagents and Consumable Materials
8	Sample Collection, Preservation, and Storage
9	Calibration and Standardization
10	Quality Control
11	Procedure
12	Calculations
13	Precision and Bias
14	References

TABLES

1. Single-Operator Bias and Precision for Nitrate-Nitrite Determined from Analyte Spikes of Wet Deposition Samples.
2. Single-Operator Bias and Precision for Nitrate Determined from Quality Control Check Samples.

FIGURES

1. Percentile Nitrate-Nitrite Concentration Values Obtained from Wet Deposition Samples.
2. Nitrate-Nitrite Sampling and Analytical System -- Segmented Flow.

1. SCOPE AND APPLICATION

1.1 This method is applicable to the automated colorimetric measurement of nitrate-nitrite in wet deposition samples by cadmium reduction.

1.2 The term "wet deposition" is used in this method to designate rain, snow, dew, sleet, and hail.

1.3 The method detection limit (MDL) determined from replicate analyses of a calibration standard containing 0.10 mg/L nitrate is 0.02 mg/L. The analyte concentration range of this method is 0.02-5.00 mg/L as NO_3^-.

1.4 Figure 1 represents a cumulative frequency percentile nitrate-nitrite concentration plot obtained from analyses of over five thousand wet deposition samples. These data may be used as an aid in the selection of appropriate calibration standard concentrations.

2. SUMMARY OF METHOD

2.1 A filtered sample is mixed with ammonium chloride and introduced into a copper-cadmium reduction column. Nitrate ions are reduced to nitrite ions and mixed with a color reagent to form a reddish-purple complex. Determination of nitrite alone can be conducted by eliminating the reduction column. The intensity of the color complex is proportional to the concentration of nitrite in solution. After color development, a flowcell receives the stream for measurement. A light beam of a wavelength characteristic of the color complex is passed through the solution. The light energy measured by a photodetector is a function of the concentration of nitrite ion in the sample. Beer's Law is used to relate the measured transmittance to concentration:

$$\log(1/T) = abc$$

where: T = transmittance
a = absorptivity
b = length of light path
c = concentration of absorbing species (mg/L)

A calibration curve is constructed using standard solutions containing known concentrations of nitrate. From this curve, the concentration of nitrate-nitrite in a wet deposition sample is determined.

3. DEFINITIONS

3.1 COLORIMETRY -- the measurement of light transmitted by a colored complex as a function of concentration.

3.2 For definitions of other terms used in this method, refer to the glossary. For an explanation of the metric system including units, symbols, and conversion factors see American Society for Testing and Materials (ASTM) Standard E 380, "Metric Practices" (14.1).

4. INTERFERENCES

4.1 Sample color absorbing in the wavelength range of 510-530 nm will increase the measured concentration of nitrate-nitrite in the sample. Wet deposition samples are generally colorless; therefore, this type of interference is rare. If color does cause a problem, however, a sample not containing N-(1-naphthyl)ethylenediamine Dihydrochloride can be analyzed and the measured concentration subtracted.

4.2 In this method, the volume of alkaline solution (NH_4Cl) used is 3.8 times that of the sample. This ensures that wet deposition samples with pH's as low as 3.5 are easily neutralized by the alkaline reagent and reduced properly in the cadmium column.

5. SAFETY

5.1 The calibration standards, sample types, and most reagents used in this method pose no hazard to the analyst. Use a fume hood, protective clothing, and safety glasses when handling concentrated hydrochloric acid (Sect. 7.8).

5.2 Use a fume hood when preparing the alkaline water (Sect. 7.3). Vapors produced by this reagent are extremely irritating.

5.3 When preparing the cadmium reduction column (Sect. 11.1), use gloves, safety glasses, protective clothing, and a fume hood. Cadmium produces nephrotoxic effects; therefore, avoid all skin and respiratory contact (14.2).

CAUTION: When discarding cadmium waste, store in a tightly sealed container for later disposal at a hazardous waste treatment/storage facility.

5.4 Follow American Chemical Society guidelines regarding safe handling of chemicals used in this method (14.3).

6. APPARATUS AND EQUIPMENT

6.1 AUTOMATED COLORIMETRIC INSTRUMENT -- Select and assemble an analytical system consisting of the following:

6.1.1 Sampler.

6.1.2 Proportioning Pump.

6.1.3 Analytical Cartridge.

6.1.3.1 Reduction column -- Use glass or flexible polyolefin tubing having a length of 36 cm with an inside diameter of 2.29 mm (0.09 inches). Prepare the reduction column according to the procedure in Sect. 11.1.

6.1.4 Colorimeter with a 520 nm wavelength setting. Ensure that the colorimeter is equipped with photodetectors having maximum sensitivity at this wavelength setting. A 15 mm flow cell is adequate to achieve the MDL stated in Sect. 1.3.

6.1.5 Strip Chart Recorder (or other data acquisiton device).

6.1.6 Printer (optional).

6.3 Wherever possible, use glass transmission lines with an inside diameter of 1.85 mm (0.073 inches) in the analytical cartridge and colorimeter. Glass yields a more uniform sample flow and does not degrade as quickly as other tubing materials. When connecting two glass lines, ensure that the lines are abutted. To minimize sample pulsing, maintain uniform inside diameter throughout all transmission tubing. Minimize the length of all transmission tubing to optimize the performance of the hydraulic system.

6.4 Enclose the sampler with a dust cover to prevent contamination.

6.5 To prevent the intake of any precipitates from the reagents, install intake filters at the end of the transmission lines that are used to transport the reagents from their respective containers to the proportioning pump.

6.6 LABORATORY FACILITIES -- Laboratories used for the analysis of wet deposition samples should be free from external sources of contamination. The use of laminar flow clean air workstations is recommended for sample processing and preparation to avoid the introduction of airborne contaminants. Samples should always be capped or covered prior to analysis. A positive pressure environment within the laboratory is also recommended to minimize the introduction of external sources of contaminant gases and particulates. Windows within the laboratory should be kept closed at all times and sealed if air leaks are apparent. The use of disposable tacky floor mats at the entrance to the laboratory is helpful in reducing the particulate loading within the room.

7. REAGENTS AND CONSUMABLE MATERIALS

7.1 PURITY OF REAGENTS -- Use reagent grade chemicals for all solutions. All reagents shall conform to the specifications of the Committee on Analytical Reagents of the American Chemical Society (ACS), where such specifications are available.

7.2 PURITY OF WATER -- Use water conforming to ASTM Specification D 1193, Type II (14.4). Point of use 0.2 micrometer filters are recommended for all faucets supplying water to prevent the introduction of bacteria and/or ion exchange resins into reagents, standard solutions, and internally formulated quality control check solutions.

7.3 ALKALINE WATER (pH 10.0) -- Add 1.8 mL of ammonium hydroxide (NH_4OH) to water (Sect. 7.2) and dilute to 1 L. Store at room temperature in a polyolefin container.

CAUTION: Refer to Sect. 5.2 for precautions when preparing this reagent since it produces irritating vapors.

7.4 AMMONIUM CHLORIDE REAGENT (pH 8.5) -- Dissolve 10 g of ammonium chloride (NH_4Cl) in alkaline water (Sect. 7.3) and dilute to 1 L. Add 0.5 mL of a wetting agent that does not contain nitrate-nitrite, such as Brij-35.

7.5 CADMIUM -- 40 mesh, coarse granules, 99% pure.

CAUTION: Follow the precautions in Sect. 5.3 to avoid all skin and respiratory contact with the granules.

7.6 COLOR REAGENT -- Add 100 mL of concentrated phosphoric acid (H_3PO_4 sp gr 1.71), 10 g of sulfanilamide ($C_6H_8N_2O_2S$), and 0.50 g of N-(1-Naphthyl)-ethylenediamine Dihydrochloride ($C_{12}H_{14}N_2 \cdot 2HCl$) to 800 mL of water (Sect. 7.2) and dilute to 1 L. Add 0.5 mL of a wetting agent that does not contain nitrate-nitrite, such as Brij-35. This solution is stable for one month when refrigerated at 4°C in an amber glass or polyolefin container. Allow the color reagent to reach ambient temperature before use.

7.7 COPPER SULFATE SOLUTION (4.00 g/L) -- Dissolve 2.00 g of copper sulfate pentahydrate ($CuSO_4 \cdot 5H_2O$) in water (Sect. 7.2) and dilute to 500 mL. This solution is stable for two months when stored at room temperature in a glass or polyolefin container.

7.8 HYDROCHLORIC ACID (1.0 N) -- Add 83.0 mL of concentrated hydrochloric acid (HCl, sp gr 1.19) to 900 mL of water (Sect. 7.2) and dilute to 1 L.

7.9 NITRATE SOLUTION, STOCK (1.0 mL = 1.0 mg NO_3) -- Dissolve 1.3707 g of sodium nitrate ($NaNO_3$), dried at 105°C for one hour, in water (Sect. 7.2) and dilute to 1 L. This solution is stable for one year when stored at room temperature in a glass or polyolefin container.

7.10 SAMPLER RINSE WATER -- Add 0.5 mL of a wetting agent that does not contain nitrate-nitrite, such as Brij-35, to 1 L of water (Sect. 7.2).

7.11 SAMPLE CONTAINERS -- Use polyolefin sample cups or glass test tubes that have been rinsed thoroughly with water (Sect. 7.2) before use.

8. SAMPLE COLLECTION, PRESERVATION AND STORAGE

8.1 Collect samples in high density polyethylene (HDPE) containers that have been thoroughly rinsed with ASTM Type II water (7.2). Do not use strong mineral acids or alkaline detergent solutions for cleaning collection vessels. Residual acids may remain in the polyethylene matrix and slowly leach back into the sample. Alkaline detergents may also leave residues that may affect the sample chemistry. Cap collection bottles after cleaning to prevent contamination from airborne contaminants; air dry collection buckets in a laminar flow clean air workstation and wrap in polyethylene bags prior to use. If a laminar flow workstation is not available, pour out any residual rinse water and bag the buckets immediately. Do not dry the bucket interior by any method other than air drying in a laminar flow clean air workstation.

8.2 The frequency of sample collection and the choice of sampler design are dependent on the monitoring objectives. In general, the use of wet-only samplers is recommended to exclude dry deposition contributions, minimize sample contamination, retard evaporation, and enhance sample stability. Sample collection frequency may vary from subevent to monthly sampling periods. Collection periods of more than one week are not recommended since sample integrity may be compromised by longer exposure periods.

8.3 The presence of microbial activity will affect the stability of nitrate concentrations in wet deposition samples. Sample measurements should be made immediately after collection whenever possible. The biological conversion of NH_4 and nitrite (NO_2) to nitrate after sample collection can be minimized by storing samples at 4°C prior to analysis.

8.3.1 Filtration of samples through a 0.45 micrometer membrane leached with water (Sect. 7.2) is partially effective at stabilizing nitrate by removal of biological species. Refrigeration after immediate filtration is the most reliable method to ensure sample integrity (14.5). Sample storage time should not exceed one week.

9. CALIBRATION AND STANDARDIZATION

9.1 INSTRUMENT OPTIMIZATION

9.1.1 For a segmented flow system with a concentration range from 0.02-5.00 mg/L as nitrate-nitrite, assemble the sampling and analytical system as shown in Figure 2.

9.1.2 Prepare and activate the reduction column according to Sect. 11.1.

9.1.3 Use flow rated polyvinyl chloride (PVC) or polyethylene pump and transmission tubing throughout the sampling and analytical system. Check the tubing for chemical buildup, splits, cracks, and deformations before beginning each day's analysis. Change pump tubes after 50 hours of operation. Change transmission tubes after 100 hours of operation or when uneven flow patterns are observed.

9.1.4 Optimize the tension of the pump tubes according to the manufacturer's recommendations.

9.1.5 Set the wavelength of the colorimeter to 520 nm. Allow the colorimeter to warm up for 30 minutes while pumping sampler rinse water (Sect. 7.10) and reagents through the system. After a stable baseline has been obtained, adjust the recorder to maximize the full-scale response.

9.1.6 Sample at a rate of 40 samples/hour with a 1:4 sample to rinse ratio. This sampling rate provides good peak separation. Adjust the colorimeter to maximize sensitivity while minimizing instrument noise. Refer to the manufacturer's recommendations.

9.2 CALIBRATION SOLUTIONS

9.2.1 Five calibration solutions and one zero standard are needed to generate a suitable calibration curve. The lowest calibration solution should contain nitrate at a concentration greater than or equal to the method detection limit. The highest solution should approach the expected upper limit of concentration of nitrate-nitrite in wet deposition. Prepare the remaining solutions such that they are evenly distributed throughout the concentration range. Suggested calibration standards for nitrate-nitrite are as follows: zero, 0.02, 1.25, 2.50, 3.75, and 5.00 mg/L as NO_3^-.

9.2.2 Prepare all calibration standards by diluting the stock standard (Sect. 7.9) with water (Sect. 7.2). Use glass (Class A) or plastic pipettes that are within the bias and precision tolerances specified by the manufacturer. Standards with nitrate concentrations greater than 0.25 mg/L are stable for one week when stored at room temperature in glass or polyolefin containers. Prepare standards with 0.25 mg/L or less of nitrate every day and store at room temperature in glass or polyolefin containers.

9.3 CALIBRATION CURVE

9.3.1 Analyze the standard containing the highest concentration of nitrate and adjust the colorimeter calibration control to obtain full-scale deflection on the recorder. Use the zero standard to adjust the baseline. If a printer is used, adjust it to read the correct concentration. Analyze all the standards and construct a calibration curve according to Sect. 12. After every 30 samples and at the end of each day's analyses, reconstruct the entire calibration curve.

9.3.2 Verify the calibration curve after every ten samples and at the end of each day's analyses according to Sect. 10.5.

10. QUALITY CONTROL

10.1 Each laboratory using this method should develop formalized quality control protocols to continually monitor the bias and precision of all measurements. These protocols are required to ensure that the measurement system is in a state of statistical control. Estimates of bias and precision for wet deposition analyses cannot be made unless these control procedures are followed. Detailed guidelines for the development of quality assurance and quality control protocols for wet deposition measurement systems are published in a manual available from the United States Environmental Protection Agency, Research Triangle Park, NC 27711 (14.6). Included in this manual are procedures for the development of statistical control charts for use in monitoring bias and precision as well as recommendations for the introduction of reagent blanks, laboratory duplicates, field duplicates, spike samples, and performance evaluation samples. These guidelines are to be used by all laboratories involved with wet deposition measurements.

10.2 ESTABLISHMENT OF WARNING AND CONTROL LIMITS -- Warning and control limits are used to monitor drift in the calibration curve, analyses of quality control check samples (QCS), and measured recoveries from laboratory spikes.

10.2.1 Calibration Curve -- After a calibration curve has been constructed according to Sect. 12, reanalyze additional aliquots of the low and high concentration standards. Calculate the concentrations using the previously derived calibration curve. Repeat this procedure until at least ten determinations at each concentration level have been made. These data should be collected on ten different days to provide a realistic estimate of the method variability. Calculate a standard deviation (s) at each concentration level. Use the nominal standard concentration as the mean value ($\bar{x}$) for determining the control limits. A warning limit of $\bar{x} \pm 2s$ and a control limit of $\bar{x} \pm 3s$ should be used. Reestablish these limits whenever instrumental operating conditions change.

10.2.2 Quality Control Check Samples (QCS) -- Calculate warning and control limits for QCS solutions from a minimum of ten analyses performed on ten days. Use the calculated standard deviation (s) at each QCS concentration level to develop the limits as described in Sect. 10.2.1. Use the certified or NBS traceable concentration as the mean (target) value. Constant positive or negative measurements with respect to the true value are indicative of a method or procedural bias. Utilize the data obtained from QCS measurements as in Sect. 10.4 to determine when the measurement system is out of statistical control. The standard deviations used to generate the QCS control limits should be comparable to the single operator precision reported in Table 2. Reestablish new warning and control limits whenever instrumental operating conditions are varied or QCS concentrations are changed.

10.2.3 Laboratory Spike Solutions -- A minimum of ten analyte spikes of wet deposition samples is required to develop a preliminary data base for the calculation of warning and control limits for spike recovery data. Select the spike concentration such that the working range of the method will not be exceeded. Samples selected for the initial spike recovery study should represent the concentration range common to wet deposition samples in order to reliably estimate the method accuracy. Calculate a mean and standard deviation of the percent recovery data using the formulas provided in the glossary. Determine warning and control limits using $\pm 2s$ and $\pm 3s$, respectively. If the data indicate that no significant method bias exists (14.7), the 100 percent recovery is used as the mean percent recovery. Where a significant bias is determined at the 95% confidence level, the control limits are centered around the bias estimate. Routine spiked sample analyses that yield percent recovery data outside of the control limits are an indication of matrix interferences that should be resolved before routine analyses are continued.

10.2.4 All warning and control limits should be reevaluated on a continual basis as additional data are collected during routine analyses. The limits should be broadened or narrowed if a recalculated standard deviation under similar operating conditions provides a different estimate of the procedure variability.

10.3 Monitor the cleaning procedure by pouring a volume of water (Sect. 7.2) that approximates the median sample size into the collection vessel. Allow the water to remain in the sealed or capped collection container for at least 24 hours and determine the nitrate concentration. If the solution concentration exceeds the MDL, a contamination problem is indicated in the cleaning procedure. Take corrective action before the sampling containers are used for the collection of wet deposition.

10.4 Analyze a quality control check sample (QCS) after the calibration curve has been established. This sample may be formulated in the laboratory or obtained from the National Bureau of Standards (NBS Standard Reference Material 2694, Simulated Rainwater). Verify the accuracy of internally formulated QCS solutions with an NBS traceable standard before acceptance as a quality control check. The check sample(s) selected must be within the range of the calibration standards. If the measured value for the QCS falls outside of the $\pm 3s$ limits (Sect. 10.2.2), or if two successive QCS checks are outside of the $\pm 2s$ limits, a problem is indicated with the system or the calibration procedure. Corrective action should be initiated to bring the results of the QCS within the established control limits. Plot the data obtained from the QCS checks on a control chart for routine assessments of bias and precision.

10.5 Verify the calibration curve after a maximum of ten samples and at the end of each day's analyses. Analyze calibration standards at the low and high ends of the working range. If the routine calibration checks do not meet the criteria described in Sect. 10.4, recalibrate the system and reanalyze all samples from the last time the system was in control. Verify the new calibration curve with the QCS according to Sect. 10.4 and reanalyze all samples measured since the last time the system was in control.

10.6 Submit a Field Blank (FB) to the laboratory for every 20 samples. The FB may consist of a water sample (Sect. 7.2) or a known reference solution that approximates the concentration levels characteristic of wet deposition. The FB is poured into the sampling vessel at the field site and undergoes identical processing and analytical protocols as the wet deposition sample(s). Use the analytical data obtained from the FB to determine any contamination introduced in the field and laboratory handling procedures. The data from the known reference solution can be used to calculate a system precision and bias.

10.7 Prepare and analyze a laboratory spike of a wet deposition sample according to the guidelines provided in "Quality Assurance Manual for Precipitation Measurement Systems" (14.6). Compare the results obtained from spiked samples to those obtained from identical samples to which no spikes were added. Use these data to monitor the method percent recovery as described in Sect. 10.2.3.

10.8 Participation in performance evaluation studies is recommended for wet deposition chemistry laboratories. The samples used for these performance audits should contain the analytes of interest at concentrations within the normal working range of the method. The true values are unknown to the analyst. Performance evaluation studies for wet deposition chemistry laboratories are conducted semiannually by the USEPA Performance Evaluation Branch, Quality Assurance Division, Research Triangle Park, NC 27711.

11. PROCEDURE

11.1 REDUCTION COLUMN

11.1.1 Wash about 5 g of cadmium granules with five 10 mL aliquots of 1.0 N HCl. Rinse with equal volumes of water (Sect. 7.2). The cadmium should be a silver color after cleaning.

11.1.2 Wash the cadmium with five 10 mL aliquots of $CuSO_4$ until colloidal copper particles form and no blue color remains. Wash the granules thoroughly with equal portions of water (Sect. 7.2) to remove the colloidal copper. The cadmium should appear black after cleaning.

11.1.3 Fill the column with water (Sect. 7.2). Add the prepared cadmium to the column and plug the open ends with 80 mesh teflon screen or glass wool.

Note: Do not allow air to enter the column or let the cadmium become dry. The presence of air bubbles reduces column efficiency. If air enters the column, repeat the above procedure.

11.1.4 Fill all pump tubes with reagents before inserting the column in the analytical stream to prevent the introduction of air bubbles. Make sure no air is present in any of the transmission lines leading to the column.

11.1.5 For initial activation of the column, continuously sample a 100 mg/L nitrate standard for five minutes. Rinse with sampler rinse water (sect. 7.10) for at least ten minutes.

11.2 A reduction column prepared according to Sect. 11.1 should last for 300-400 samples. The cadmium in the column can be reactivated and used again to prepare a new column by repeating the procedure outlined in Sect. 11.1.

11.3 Optimize the instrument each day according to Sect. 9.1.

11.4 Prepare all standards and construct a calibration curve according to Sects. 9.2 and 9.3.

11.5 After the calibration curve is established, analyze the QCS. If the measured value for the QCS is not within the specified limits (Sect. 10.2.2), refer to Sect. 10.4.

11.6 Load the sampler tray and begin analysis.

11.7 If the peak height response exceeds the working range of the system, dilute the sample with zero standard and reanalyze.

11.8 When analysis is complete, rinse the cadmium reduction column with NH_4Cl for one minute, remove the reduction column, and seal each end of the column tubing to avoid exposure of the cadmium to air. Alternatively, the system can be equipped with a switching valve to allow the operator to take the column off-line. Rinse the remainder of the system with sampler rinse water (Sect. 7.10) for 30 minutes.

12. CALCULATIONS

12.1 Calculate a linear least squares fit of the standard concentration as a function of the measured peak height. The linear least squares equation is expressed as follows:

$$y = B_0 + B_1 x$$

where: y = standard concentration in mg/L
x = peak height measured
B_0 = y-intercept calculated from: $\bar{y} - B_1\bar{x}$
B_1 = slope calculated from:

$$\sum_{i=1}^{n} (x_i - \bar{x})(y_i - \bar{y}) / \sum_{i=1}^{n} (x_i - \bar{x})^2$$

where: $\bar{x}$ = mean of peak heights measured
$\bar{y}$ = mean of standard concentrations
n = number of samples

The correlation coefficient should be 0.9990 or greater. Determine the concentration of nitrate-nitrite from the calibration curve.

12.2 If the relationship between standard concentration and measured peak height is nonlinear, use a second degree polynomial least squares equation to derive a curve with a correlation $\geq$0.9990. The second degree polynomial equation is expressed as follows:

$$y = B_2 x^2 + B_1 x + B_0$$

A computer is necessary for the derivation of this function. Determine the concentration of nitrate-nitrite from the calibration curve.

12.3 An integration system may also be used to provide a direct readout of the concentration of nitrate-nitrite.

12.4 If the concentration of nitrate alone is desired, determine the content of nitrite in the samples by eliminating the reduction column from the system. Subtract the nitrite from the total nitrate-nitrite concentration.

12.5 Report data in mg/L as NO_3^-. Do not report data lower than the lowest calibration standard.

13. PRECISION AND BIAS

13.1 The mean percent recovery and mean bias of this method were determined from the analysis of spiked wet deposition samples according to ASTM Standard Practice D4210, Annex A4 (14.7). The results are summarized in Table 1. No statistically significant biases were found.

13.2 Single-operator precision and bias were obtained from the analysis of quality control check samples that approximated the levels common to wet deposition samples. These results reflect the accuracy that can be expected when the method is used by a competent operator. These data are presented in Table 2.

14. REFERENCES

14.1 Annual Book of ASTM Standards, Part 31, "Excerpts from Standard for Metric Practice," Standard E 380-79, 1982, pp. 679-694.

14.2 "Trace Metals in Water Supplies: Occurrence, Significance, and Control," American Water Works Association, Illinois Environmental Protection Agency, **Vol. 71**, No. 108, April 29, 1974.

14.3 "Safety in Academic Chemistry Laboratories," American Chemical Society Publication, Committee on Chemical Safety, 3rd Edition, 1979.

14.4 Annual Book of ASTM Standards, Part 31, "Standard Specification for Reagent Water," Standard D 1193-77, 1982, p. 39.

14.5 Peden, M. E. and Skowron, L. M., "Ionic Stability of Precipitation Samples," Atmos. Environ. **12**, 1978, pp. 2343-2349.

14.6 Topol, L. E., Lev-On, M., Flanagan, J., Schwall, R. J., Jackson, A. E., Quality Assurance Manual for Precipitation Measurement Systems, 1985, U.S. Environmental Protection Agency, Environmental Monitoring Systems Laboratory, Research Triangle Park, NC 27711.

14.7 Annual Book of ASTM Standards, Section 11, **Vol. 11.01 (1)**, "Practice for Intralaboratory Quality Control Procedures and a Discussion of Reporting Low-Level Data," Standard D4210 Annex A4, 1983, pp. 15-16.

Table 1. Single-Operator Precision and Bias for Nitrate-Nitrite Determined from Analyte Spikes of Wet Deposition Samples.

Analyte	Amount Added, mg/L	n[a]	Mean Percent Recovery	Mean Bias, mg/L	Standard Deviation, mg/L	Statistically Significant Bias?[b]
Nitrate	0.56	9	94.5	-0.03	0.03	No
	1.21	10	96.3	-0.04	0.03	No

a. Number of replicates
b. 95% Confidence Level

Table 2. Single-Operator Precision and Bias for Nitrate Determined from Quality Control Check Samples.

Theoretical Concentration, mg/L	Measured Concentration, mg/L	n[a]	Bias, mg/L	Bias, %	Precision, s, mg/L	Precision, RSD, %
0.62	0.63	88	0.01	1.6	0.02	3.2
0.80	0.78	24	-0.02	-2.5	0.01	1.3
3.17	3.11	88	-0.06	-1.9	0.07	2.2
3.54	3.44	23	-0.10	-2.8	0.05	1.4

The above data were obtained from records of measurements made under the direction of the NADP/NTN quality assurance program.

a. Number of replicates

Figure 1. Percentile Concentration Values Obtained from Wet Deposition Samples: Nitrate-Nitrite

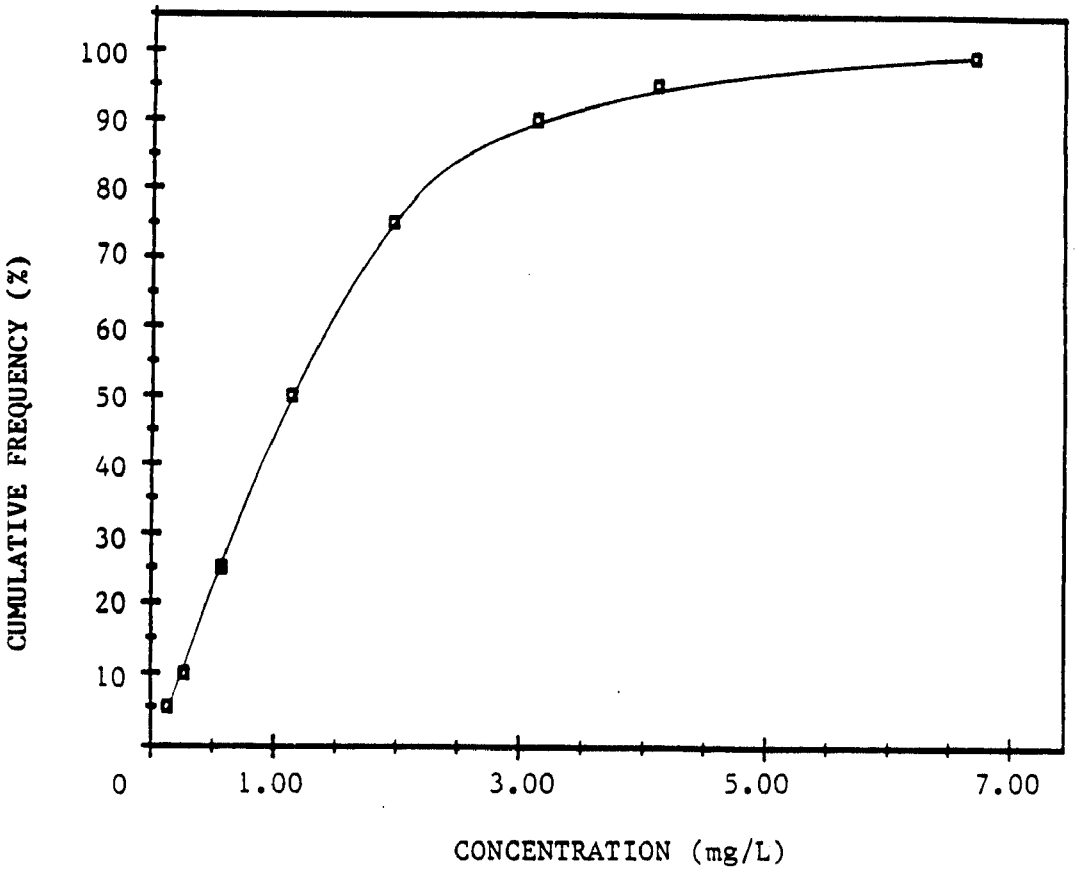

Figure 2. Nitrate-Nitrite Sampling and Analytical System -- Segmented Flow.

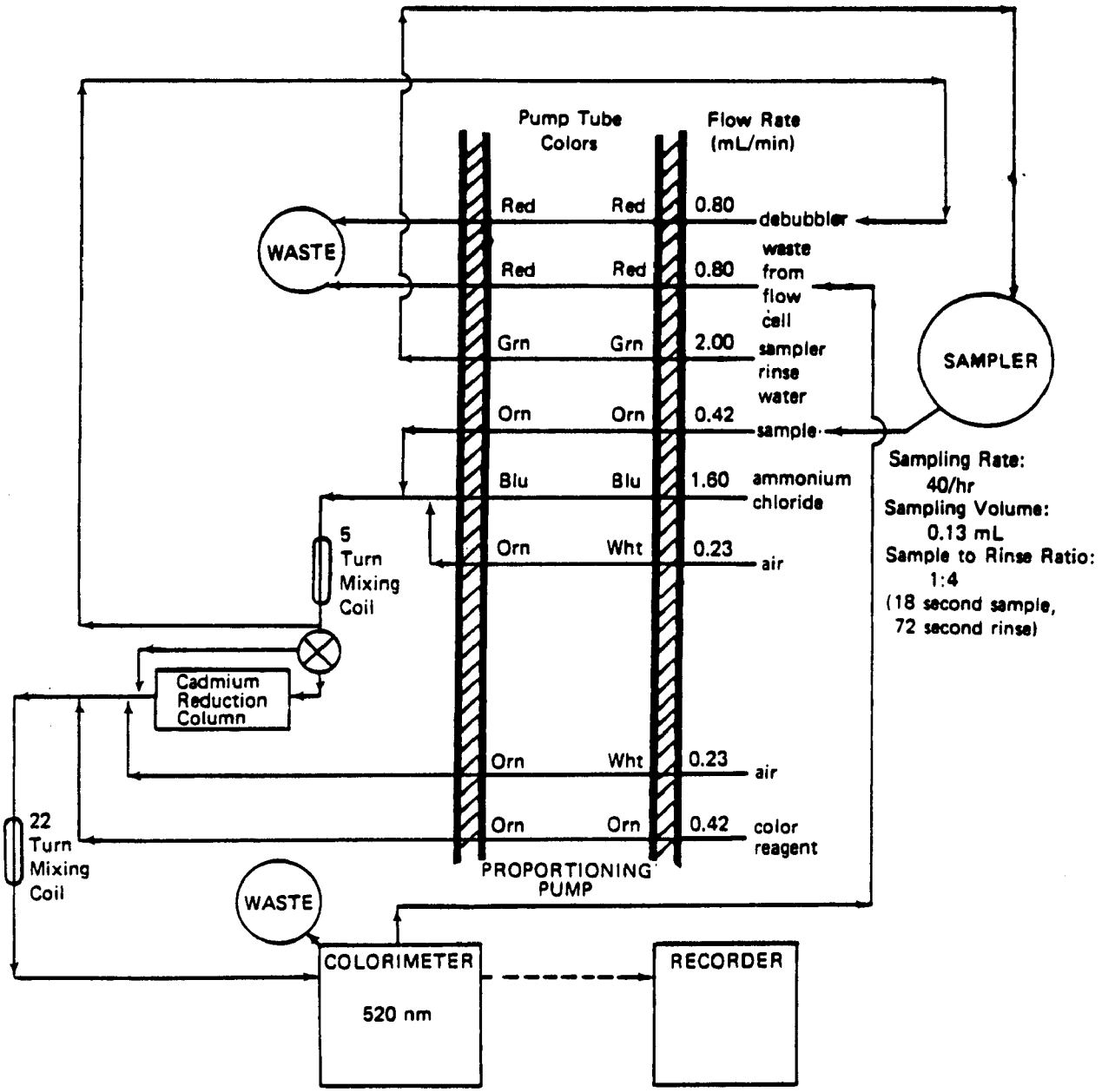

Appendix I

METHOD 325.6 -- CHLORIDE IN WET DEPOSITION BY AUTOMATED COLORIMETRIC DETERMINATION USING THIOCYANATE

Method 325.6 -- Chloride in Wet Deposition by Automated Colorimetric Determination Using Thiocyanate

March 1986

Performing Laboratory:

Brigita Demir
Susan R. Bachman
Carla Jo Brennan
Mark E. Peden

Illinois State Water Survey
Analytical Chemistry Unit
2204 Griffith Drive
Champaign, Illinois 61820

Sponsoring Agency:

John D. Pfaff, Project Officer

Inorganic Analysis Section
Physical and Chemical Methods Branch
United States Environmental Protection Agency
Office of Research and Development
Environmental Monitoring and Support Laboratory
Cincinnati, Ohio 45268

INDEX

Section Number	Subject
1	Scope and Application
2	Summary of Method
3	Definitions
4	Interferences
5	Safety
6	Apparatus and Equipment
7	Reagents and Consumable Materials
8	Sample Collection, Preservation, and Storage
9	Calibration and Standardization
10	Quality Control
11	Procedure
12	Calculations
13	Precision and Bias
14	References

TABLES

1. Single-Operator Precision and Bias for Chloride Determined from Analyte Spikes of Wet Deposition Samples.
2. Single-Operator Precision and Bias for Chloride Determined from Quality Control Check Samples.

FIGURES

1. Percentile Concentration Values Obtained from Wet Deposition Samples: Chloride.
2. Chloride Sampling and Analytical System -- Segmented Flow.

1. SCOPE AND APPLICATION

1.1 This method is applicable to the automated colorimetric determination of chloride in wet deposition samples by reaction with thiocyanate.

1.2 The term "wet deposition" is used in this method to designate rain, snow, dew, sleet, and hail.

1.3 The method detection limit (MDL) determined from replicate analyses of a calibration standard containing 0.10 mg/L chloride is 0.03 mg/L. The concentration range of this method is 0.03-2.00 mg/L as Cl^-.

1.4 Figure 1 represents a cumulative frequency percentile chloride concentration plot obtained from analyses of over five thousand wet deposition samples. These data may be used as an aid in the selection of appropriate calibration standard concentrations.

2. SUMMARY OF METHOD

2.1 A sample is mixed with a solution of saturated mercuric thiocyanate and ferric ammonium sulfate. Mercuric thiocyanate reacts with chloride ions in the sample to form mercuric chloride. The liberated thiocyanate ions then react with ferric ions to form a colored ferric thiocyanate complex. The intensity of the color of this complex is proportional to the concentration of chloride in solution. After color development, a flowcell receives the stream for measurement. A light beam of a wavelength characteristic of the ferric thiocyanate complex is passed through the solution. The light energy measured by photodetectors is a function of the concentration of chloride ion in the sample. Beer's Law is used to relate the measured transmittance to concentration:

$$\log(1/T) = abc$$

where: T = transmittance
a = absorptivity
b = length of light path
c = concentration of absorbing species (mg/L)

A calibration curve is constructed using standard solutions containing known concentrations of chloride. From this curve, the concentration of chloride in a wet deposition sample is determined.

3. DEFINITIONS

3.1 COLORIMETRY -- the measurement of light transmitted by a colored complex as a function of concentration.

3.2 For definitions of other terms used in these methods, refer to the glossary. For an explanation of the metric system including units, symbols, and conversion factors see American Society for Testing and Materials (ASTM) Standard E 380, "Metric Practices" (14.1).

4. INTERFERENCES

4.1 Sample color absorbing in the wavelength range of 470-490 nm will increase the measured concentration of chloride in the sample. Wet deposition samples are generally colorless, therefore, this type of interference is rare.

4.2 Other halogens such as bromide and fluoride present in the sample will compete with chloride ions to complex the mercury from the mercuric thiocyanate reagent. The excess thiocyanate ions liberated form the colored ferric thiocyanate complex, resulting in an elevated concentration of chloride determined in the sample.

5. SAFETY

5.1 The calibration standards and sample types used in this method pose no hazard to the analyst. Many of the reagents, however, require special precautions as detailed below. Use a fume hood, protective clothing, and safety glasses when handling concentrated nitric (Sect. 7.4) and sulfuric acids (Sect. 7.7).

5.2 Use a fume hood and protective gloves when preparing the ferric ammonium sulfate solution (Sect. 7.4). Vapors produced by the reaction between ferric ammonium sulfate and nitric acid are hazardous.

5.3 Anytime the mercuric thiocyanate solution (Sect. 7.5) is prepared, wear gloves and avoid all skin contact with this poisonous reagent.

CAUTION: When discarding the mercuric sulfide waste, follow the precautions detailed in Sect. 11.7.

5.4 Follow American Chemical Society guidelines regarding the safe handling of chemicals used in this method (14.2).

6. APPARATUS AND EQUIPMENT

6.1 AUTOMATED COLORIMETRIC INSTRUMENT -- Select and assemble an analytical system consisting of the following:

6.1.1 Sampler.

6.1.2 Proportioning Pump.

6.1.3 Analytical Cartridge.

6.1.4 Colorimeter with a 480 nm wavelength setting. Ensure that the colorimeter is equipped with photodetectors having maximum sensitivity at this wavelength setting. A 15 mm flow cell is adequate to achieve the MDL stated in Sect. 1.3.

6.1.5 Strip Chart Recorder (or other data acquisition device).

6.1.6 Printer (optional).

6.2 Wherever possible, use glass transmission lines with an inside diameter of 1.86 mm (0.073 inches) in the analytical cartridge and colorimeter. Glass yields a more uniform sample flow and does not degrade as quickly as other tubing materials. When connecting two glass lines, ensure that the ends are abutted. To minimize pulsing of the analytical stream, maintain uniform inside diameter throughout all transmission tubing. Minimize the length of all transmission tubing to optimize the performance of the hydraulic system.

6.3 Enclose the sampler with a dust cover to prevent contamination.

6.4 To prevent the intake of any precipitates from the reagents, install intake filters at the end of the transmission lines that are used to transport the reagents from their respective containers to the proportioning pump.

6.5 LABORATORY FACILITIES -- Laboratories used for the analysis of wet deposition samples should be free from external sources of contamination. The use of laminar flow clean air workstations is recommended for sample processing and preparation to avoid the introduction of airborne contaminants. Samples should always be capped or covered prior to analysis. A positive pressure environment within the laboratory is also recommended to minimize the introduction of external sources of contaminant gases and particulates. Windows within the laboratory should be kept closed at all times and sealed if air leaks are apparent. The use of disposable tacky floor mats at the entrance to the laboratory is helpful in reducing the particulate loading within the room.

7. REAGENTS AND CONSUMABLE MATERIALS

7.1 PURITY OF REAGENTS -- Use reagent grade chemicals for all solutions. All reagents shall conform to the specifications of the Committee on Analytical Reagents of the American Chemical Society (ACS), where such specifications are available.

7.2 PURITY OF WATER -- Use water conforming to ASTM Specification D 1193, Type II (14.3). Point of use 0.2 micrometer filters are recommended for all faucets supplying water to prevent the introduction of bacteria and/or ion exchange resins into reagents, standard solutions, and internally formulated quality control check solutions.

7.3 CHLORIDE SOLUTION, STOCK (1.0 mL = 1.0 mg Cl) -- Dissolve 1.6485 g of sodium chloride (NaCl), dried at 105°C for one hour, in water (Sect. 7.2) and dilute to 1 L. Store at room temperature in a high density polyethylene or polypropylene container.

7.4 FERRIC AMMONIUM SULFATE SOLUTION -- Dissolve 60 g of ferric ammonium sulfate ($FeNH_4(SO_4)_2 \cdot 12(H_2O)$) in approximately 500 mL of water (Sect. 7.2). Add 355 mL of concentrated nitric acid (HNO_3, sp gr 1.42) and dilute to 1 L with water (Sect. 7.2). Filter the solution and add 0.5 mL Brij-35 or a similar wetting agent. This solution is stable for one year when stored at room temperature in an amber glass container.

CAUTION: The vapors produced when ferric ammonium sulfate is dissolved in acid are hazardous. Refer to Sect. 5.2 for an explanation of necessary safety precautions.

7.5 MERCURIC THIOCYANATE SOLUTION (Saturated) -- Add 5 g of mercuric thiocyanate ($Hg(SCN)_2$) to water (Sect. 7.2) and dilute to 1 L. Decant and filter a 200 mL portion of the saturated supernatant liquid to use as the reagent. Store the solution at room temperature in a high density polyethylene or polypropylene container.

CAUTION: Mercuric thiocyanate solution is a poisonous reagent. Avoid all skin contact with this solution. Refer to Sect. 5.3 for an explanation of necessary safety precautions.

7.6 SAMPLER RINSE WATER -- Add 0.5 mL Brij-35 or another suitable wetting agent to 1 L of water (Sect. 7.2).

7.7 SULFURIC ACID (7.2 N) -- Add 200 mL of sulfuric acid (H_2SO_4, sp gr 1.84) to water (Sect. 7.2) and dilute to 1 L. Store at room temperature in a glass container.

7.8 THIOACETAMIDE SOLUTION (13% w/v) -- Dissolve 130 g of thioacetamide (CH_3SCNH_2) in water (Sect. 7.2) and dilute to 1 L. This solution is stable for one year when stored at room temperature in a glass container.

7.9 SAMPLE CONTAINERS -- Use polyolefin sample cups or glass test tubes that have been thoroughly rinsed with water (Sect. 7.2) before use.

8. SAMPLE COLLECTION, PRESERVATION AND STORAGE

8.1 Collect samples in high density polyethylene (HDPE) containers that have been thoroughly rinsed with ASTM Type II water (7.2). Do not use strong mineral acids or alkaline detergent solutions for cleaning collection vessels. Residual acids may remain in the polyethylene matrix and slowly leach back into the sample. Alkaline detergents may also leave residues that may affect the sample chemistry. Cap collection bottles after cleaning to prevent contamination from airborne contaminants; air dry collection buckets in a laminar flow clean air workstation and wrap in polyethylene bags prior to use. If a laminar flow workstation is not available, pour out any residual rinse water and bag the buckets immediately. Do not dry the bucket interior by any method other than air drying in a laminar flow clean air workstation.

8.2 The frequency of sample collection and the choice of sampler design are dependent on the monitoring objectives. In general, the use of wet-only samplers is recommended to exclude dry deposition contributions, minimize sample contamination, retard evaporation, and enhance sample stability. Sample collection frequency may vary from subevent to monthly sampling periods. Collection periods of more than one week are not recommended since sample integrity may be compromised by longer exposure periods.

8.3 Chloride ion has been found to be stable in HDPE bottles for six weeks without special preservation techniques such as filtration or refrigeration (14.4).

9. CALIBRATION AND STANDARDIZATION

9.1 INSTRUMENT OPTIMIZATION

9.1.1 For a flow segmented system with a concentration range from 0.03-2.00 mg/L as chloride, assemble the sampling and analytical system as shown in Figure 2.

9.1.2 Use flow rated polyvinyl chloride (PVC) or polyethylene pump and transmission tubing throughout the sampling and analytical system. Use polyethylene tubing to transport the ferric ammonium sulfate reagent. This solution will degrade PVC tubing quickly. Check the tubing for chemical buildup, splits, cracks, and deformations before beginning each day's analysis. Change pump tubes after 50 hours of operation. Change transmission tubing after 100 hours of operation or when uneven flow patterns are observed. Replace the tubing used to transport the ferric ammonium sulfate reagent daily.

9.1.3 Optimize the tension of the pump tubes according to manufacturer's recommendations.

9.1.4 Set the wavelength of the colorimeter to 480 nm. Allow the colorimeter to warm up for 30 minutes while pumping sampler rinse water (Sect. 7.6) and reagents through the system. After a stable baseline has been obtained, adjust the recorder to maximize the full-scale response.

9.1.5 Sample at a rate of 40 samples/hour with a 1:4 sample to rinse ratio. This sampling rate provides good peak separation. Adjust the colorimeter to maximize sensitivity while minimizing instrument noise. Refer to the manufacturer's recommendations.

9.2 CALIBRATION SOLUTIONS

9.2.1 Five calibration solutions and one zero standard are needed to generate a suitable calibration curve. The lowest calibration solution should contain chloride at a concentration greater than or equal to the method detection limit. The highest solution should approach the expected upper limit of concentration of chloride in wet deposition. Prepare the remaining solutions such that they are evenly distributed throughout the concentration range. Suggested calibration standards for chloride are as follows: zero, 0.03, 0.50, 1.00, 1.50, and 2.00 mg/L as Cl^-.

9.2.2 Prepare all calibration standards by diluting the stock standard (Sect. 7.3) with water (Sect. 7.2). Use glass (Class A) or plastic pipettes that are within the bias and precision tolerances specified by the manufacturer. The standards are stable for one month when stored at room temperature in high density polyethylene or polypropylene containers.

9.3 CALIBRATION CURVE

9.3.1 Analyze the standard containing the highest concentration of chloride and adjust the colorimeter calibration control to obtain full-scale deflection on the recorder. Use the zero standard to set the instrument baseline. If a printer is used, adjust it to read the correct concentration. Analyze all the standards and construct a calibration curve according to Sect. 12. After every 30 samples and at the end of the day's analyses, reconstruct the entire calibration curve.

9.3.2 Verify the calibration curve after every ten samples and at the end of each day's analyses according to Sect. 10.5.

10. QUALITY CONTROL

10.1 Each laboratory using this method should develop formalized quality control protocols to continually monitor the bias and precision of all measurements. These protocols are required to ensure that the measurement system is in a state of statistical control. Estimates of bias and precision for wet deposition analyses cannot be made unless these control procedures are followed. Detailed guidelines for the development of quality assurance and quality control protocols for wet deposition measurement systems are published in a manual available from the United States Environmental Protection Agency, Research Triangle Park, NC 27711 (14.5). Included in this manual are procedures for the development of statistical control charts for use in monitoring bias and precision as well as recommendations for the introduction of reagent blanks, laboratory duplicates, field duplicates, spike samples, and performance evaluation samples. These guidelines are to be used by all laboratories involved with wet deposition measurements.

10.2 ESTABLISHMENT OF WARNING AND CONTROL LIMITS -- Warning and control limits are used to monitor drift in the calibration curve, analyses of quality control check samples (QCS), and measured recoveries from laboratory spikes.

10.2.1 Calibration Curve -- After a calibration curve has been constructed according to Sect. 12, reanalyze additional aliquots of the low and high concentration standards. Calculate the concentrations using the previously derived calibration curve. Repeat this procedure until at least ten determinations at each concentration level have been made. These data should be collected on ten different days to provide a realistic estimate of the method variability. Calculate a standard deviation (s) at each concentration level. Use the nominal standard concentration as the mean value ($\bar{x}$) for determining the control limits. A warning limit of $\bar{x} \pm 2s$ and a control limit of $\bar{x} \pm 3s$ should be used. Reestablish these limits whenever instrumental operating conditions change.

10.2.2 Quality Control Check Samples (QCS) -- Calculate warning and control limits for QCS solutions from a minimum of ten analyses performed on ten days. Use the calculated standard deviation (s) at each QCS concentration level to develop the limits as described in Sect. 10.2.1. Use the certified or NBS traceable concentration as the mean (target) value. Constant positive or negative measurements with respect to the true value are indicative of a method or procedural bias. Utilize the data obtained from QCS measurements as in Sect. 10.4 to determine when the measurement system is out of statistical control. The standard deviations used to generate the QCS control limits should be comparable to the single operator precision reported in Table 2. Reestablish new warning and control limits whenever instrumental operating conditions are varied or QCS concentrations are changed.

10.2.3 Laboratory Spike Solutions -- A minimum of ten analyte spikes of wet deposition samples is required to develop a preliminary data base for the calculation of warning and control limits for spike recovery data. Select the spike concentration such that the working range of the method will not be exceeded. Samples selected for the initial spike recovery study should represent the concentration range common to wet deposition samples in order to reliably estimate the method accuracy. Calculate a mean and standard deviation of the percent recovery data using the formulas provided in the glossary. Determine warning and control limits using $\pm 2s$ and $\pm 3s$, respectively. If the data indicate that no significant method bias exists (14.6), the 100 percent recovery is used as the mean percent recovery. Where a significant bias is determined

at the 95% confidence level, the control limits are centered around the bias estimate. Routine spiked sample analyses that yield percent recovery data outside of the control limits are an indication of matrix interferences that should be resolved before routine analyses are continued.

10.2.4 All warning and control limits should be reevaluated on a continual basis as additional data are collected during routine analyses. The limits should be broadened or narrowed if a recalculated standard deviation under similar operating conditions provides a different estimate of the procedure variability.

10.3 Monitor the cleaning procedure by pouring a volume of water (Sect. 7.2) that approximates the median sample size into the collection vessel. Allow the water to remain in the sealed or capped collection container for at least 24 hours and determine the chloride concentration. If the solution concentration exceeds the MDL, a contamination problem is indicated in the cleaning procedure. Take corrective action before the sampling containers are used for the collection of wet deposition.

10.4 Analyze a quality control check sample (QCS) after the calibration curve has been established. This sample may be formulated in the laboratory or obtained from the National Bureau of Standards (NBS Standard Reference Material 2694, Simulated Rainwater). Verify the accuracy of internally formulated QCS solutions with an NBS traceable standard before acceptance as a quality control check. The check sample(s) selected must be within the range of the calibration standards. If the measured value for the QCS falls outside of the $\pm 3s$ limits (Sect. 10.2.2), or if two successive QCS checks are outside of the $\pm 2s$ limits, a problem is indicated with the system or the calibration procedure. Corrective action should be initiated to bring the results of the QCS within the established control limits. Plot the data obtained from the QCS checks on a control chart for routine assessments of bias and precision.

10.5 Verify the calibration curve after a maximum of ten samples and at the end of each day's analyses. Analyze calibration standards at the low and high ends of the working range. If the routine calibration checks do not meet the criteria described in Sect. 10.4, recalibrate the system and reanalyze all samples from the last time the system was in control. Verify the new calibration curve with the QCS according to Sect. 10.4 and reanalyze all samples measured since the last time the system was in control.

10.6 Submit a Field Blank (FB) to the laboratory for every 20 samples. The FB may consist of a water sample (Sect. 7.2) or a known reference solution that approximates the concentration levels characteristic of wet deposition. The FB is poured into the sampling vessel at the field site and undergoes identical processing and analytical protocols as the wet deposition sample(s). Use the analytical data obtained from the FB to determine any contamination introduced in the field and laboratory handling procedures. The data from the known reference solution can be used to calculate a system precision and bias.

10.7 Prepare and analyze a laboratory spike of a wet deposition sample according to the guidelines provided in "Quality Assurance Manual for Precipitation Measurement Systems" (14.5). Compare the results obtained from spiked samples to those obtained from identical samples to which no spikes were added. Use these data to monitor the method percent recovery as described in Sect. 10.2.3.

10.8 Participation in performance evaluation studies is recommended for wet deposition chemistry laboratories. The samples used for these performance audits should contain the analytes of interest at concentrations within the normal working range of the method. The true values are unknown to the analyst. Performance evaluation studies for wet deposition chemistry laboratories are conducted semiannually by the USEPA Performance Evaluation Branch, Quality Assurance Division, Research Triangle Park, NC 27711.

11. PROCEDURE

11.1 Optimize the instrument each day according to Sect. 9.1.

11.2 Prepare all standards and construct a calibration curve according to Sect. 9.2 and 9.3.

11.3 After the calibration curve is established, analyze the QCS. If the measured value for the QCS is not within the specified limits (Sect. 10.2.2), refer to Sect. 10.4.

11.4 Load the sampler tray and begin analysis.

11.5 If the peak height response exceeds the working range of the system, dilute the sample with zero standard and reanalyze.

11.6 When analysis is complete, rinse the system with sampler rinse water (Sect. 7.6) for 15 minutes. Rinse with 7.2 N sulfuric acid (Sect. 7.7) for 15 minutes, and repeat the water rinse for 15 minutes.

11.7 Collect chloride waste from the flowcell, place in a fume hood, and add 20 mL of 13% thioacetamide solution per liter of chloride waste. Cap the container and mix well. A precipitate of mercuric sulfide will form. After 24 hours, filter the solution in a fume hood. Discard the filtrate and store the residue of mercuric sulfide in a closed glass container for later disposal at a hazardous waste treatment/storage facility.

12. CALCULATIONS

12.1 Calculate a linear least squares fit of the standard concentrations as a function of the measured peak height. The linear least squares equation is expressed as follows:

$$y = B_0 + B_1 x$$

where: y = standard concentration in mg/L
x = peak height measured
B_0 = y-intercept calculated from: $\bar{y} - B_1\bar{x}$
B_1 = slope calculated from:

$$\sum_{i=1}^{n} (x_i - \bar{x})(y_i - \bar{y}) / \sum_{i=1}^{n} (x_i - \bar{x})^2$$

where: $\bar{x}$ = mean of peak heights measured
$\bar{y}$ = mean of standard concentrations
n = number of samples

The correlation coefficient should be 0.9990 or greater. Determine the concentration of chloride from the calibration curve.

12.2 If the relationship between standard concentration and measured peak height is nonlinear, use a second degree polynomial least squares equation to derive a curve with a correlation $\geq$0.9990. The second degree polynomial equation is expressed as follows:

$$y = B_2 x^2 + B_1 x + B_0$$

A computer is necessary for the derivation of this function. Determine the concentration of chloride from the calibration curve.

12.3 An integration system may also be used to provide a direct readout of the concentration of chloride.

12.4 Report data in mg/L as Cl. Do not report data lower than the lowest calibration standard.

13. PRECISION AND BIAS

13.1 The mean percent recovery and mean bias of this method were determined from the analysis of spiked wet deposition samples according to ASTM Standard Practice D4210, Annex A4 (14.6). The results are summarized in Table 1. A small but statistically significant bias of 0.04 mg/L was determined at a spike concentration of 0.41 mg/L. No statistically significant bias was present at a spike concentration of 0.14 mg/L.

13.2 Single-operator precision and bias were obtained from the analysis of quality control check samples that approximated the levels common to wet deposition samples. These results reflect the accuracy that can be expected when the method is used by a competent operator. These data are presented in Table 2.

14. REFERENCES

14.1 Annual Book of ASTM Standards, Part 31, "Excerpts from Standard for Metric Practice," Standard E 380-79, 1982, pp. 679-694.

14.2 "Safety in Academic Chemistry Laboratories," American Chemical Society Publication, Committee on Chemical Safety, 3rd Edition, 1979.

14.3 Annual Book of ASTM Standards, Part 31, "Standard Specification for Reagent Water," Standard D 1193-77, 1982, p. 39.

14.4 Peden, M. E. and Skowron, L. M., "Ionic Stability of Precipitation Samples," Atmos. Environ. **12**, 1978, pp. 2343-2349.

14.5 Topol, L. E., Lev-On, M., Flanagan, J., Schwall, R. J., Jackson, A. E., Quality Assurance Manual for Precipitation Measurement Systems, 1985, U.S. Environmental Protection Agency, Environmental Monitoring Systems Laboratory, Research Triangle Park, NC 27711.

14.6 Annual Book of ASTM Standards, Section 11, **Vol. 11.01 (1)**, "Practice for Intralaboratory Quality Control Procedures and a Discussion of Reporting Low-Level Data," Standard D4210 Annex A4, 1983, pp. 15-16.

Table 1. Single-Operator Precision and Bias for Chloride Determined from Analyte Spikes of Wet Deposition Samples.

Analyte	Amount Added, mg/L	n[a]	Mean Percent Recovery	Mean Bias, mg/L	Standard Deviation, mg/L	Statistically Significant Bias?[b]
Chloride	0.14	10	107.1	0.01	0.01	No
	0.41	10	109.5	0.04	0.01	Yes

a. Number of replicates
b. 95% Confidence Level

Table 2. Single-Operator Precision and Bias for Chloride Determined from Quality Control Check Samples.

Theoretical Concentration, mg/L	Measured Concentration, mg/L	n[a]	Bias, mg/L	Bias, %	Precision, s, mg/L	Precision, RSD, %
0.85	0.88	105	0.03	3.5	0.02	2.3
1.78	1.87	105	0.09	5.1	0.03	1.6

The above data were obtained from records of measurements made under the direction of the NADP/NTN quality assurance program.

a. Number of replicates

Appendix J

METHOD 365.6 -- ORTHOPHOSPHATE IN WET DEPOSITION BY AUTOMATED COLORIMETRIC DETERMINATION USING ASCORBIC ACID REDUCTION

Method 365.6 -- Orthophosphate in Wet Deposition by Automated Colorimetric Determination Using Ascorbic Acid Reduction

March 1986

Performing Laboratory:

Susan R. Bachman
Michael J. Slater
Carla Jo Brennan
Mark E. Peden

Illinois State Water Survey
Analytical Chemistry Unit
2204 Griffith Drive
Champaign, Illinois 61820

Sponsoring Agency:

John D. Pfaff, Project Officer

Inorganic Analysis Section
Physical and Chemical Methods Branch
United States Environmental Protection Agency
Office of Research and Development
Environmental Monitoring and Support Laboratory
Cincinnati, Ohio 45268

INDEX

Section Number	Subject
1	Scope and Application
2	Summary of Method
3	Definitions
4	Interferences
5	Safety
6	Apparatus and Equipment
7	Reagents and Consumable Materials
8	Sample Collection, Preservation, and Storage
9	Calibration and Standardization
10	Quality Control
11	Procedure
12	Calculations
13	Precision and Bias
14	References

TABLES

1. Single-Operator Precision and Bias for Orthophosphate Determined from Analyte Spikes of Wet Deposition Samples.
2. Single-Operator Bias and Precision for Orthophosphate Determined from Quality Control Check Samples.

FIGURES

1. Orthophosphate Sampling and Analytical System -- Segmented Flow.

1. SCOPE AND APPLICATION

1.1 This method is applicable to the automated colorimetric determination of orthophosphate in wet deposition samples by ascorbic acid reduction.

1.2 The term "wet deposition" is used in this method to designate rain, snow, dew, sleet, and hail.

1.3 The method detection limit (MDL) determined from replicate analyses of a calibration standard containing 0.03 mg/L orthophosphate is 0.02 mg/L. The concentration range of this method is 0.02-0.25 mg/L as PO_4^{-3}.

1.4 The maximum concentration of phosphate observed from analyses of over five thousand wet deposition samples was 12.60 mg/L. Over 90% of the samples, however, had phosphate concentrations below the MDL.

2. SUMMARY OF METHOD

2.1 A filtered sample is mixed with an acidified solution of ammonium molybdate containing ascorbic acid and antimony to form a phosphomolybdenum blue complex. The intensity of the color complex is proportional to the concentration of orthophosphate in solution. The solution is pumped through a 37°C controlled temperature heating bath. After color development, a flowcell receives the stream for measurement. A light beam of a wavelength characteristic of the phosphomolybdenum blue complex is passed through the solution. The light energy measured by a photodetector is a function of the concentration of orthophosphate ion in the sample. Beer's Law is used to relate the measured transmittance to concentration:

$$\log(1/T) = abc$$

where: T = transmittance
a = absorptivity
b = length of light path
c = concentration of absorbing species (mg/L)

A calibration curve is constructed using standard solutions containing known concentrations of orthophosphate. From this curve, the concentration of orthophosphate in a wet deposition sample is determined.

3. DEFINITIONS

3.1 COLORIMETRY -- the measurement of light transmitted by a colored complex as a function of concentration.

3.2 For definitions of other terms used in these methods, refer to the glossary. For an explanation of the metric system including units, symbols, and conversion factors see American Society for Testing and Materials (ASTM) Standard E 380, "Metric Practices" (14.1).

4. INTERFERENCES

4.1 Sample color absorbing in the wavelength range of 870-890 nm will increase the measured concentration of orthophosphate in the sample. Wet deposition samples are generally colorless, therefore, this type of interference is rare.

5. SAFETY

5.1 The calibration standards, sample types, and most reagents used in this method pose no hazard to the analyst. Use a fume hood, protective clothing, and safety glasses when handling concentrated hydrochloric acid (Sect. 7.6) and sulfuric acid (Sect. 7.8).

5.2 Follow American Chemical Society guidelines regarding the safe handling of chemicals used in this method (14.2).

6. APPARATUS AND EQUIPMENT

6.1 AUTOMATED COLORIMETRIC INSTRUMENT -- Select and assemble an analytical system consisting of the following:

6.1.1 Sampler.

6.1.2 Proportioning Pump.

6.1.3 Analytical Cartridge.

6.1.4 Heating Bath (37°C) equipped with an 8 mL capacity glass heating coil.

6.1.5 Colorimeter with an 880 nm wavelength setting. Ensure that the colorimeter is equipped with photodetectors having maximum sensitivity at this wavelength setting. A 50 mm flow cell is required to achieve the MDL stated in Sect. 1.3.

6.1.6 Strip Chart Recorder (or other data acquisition device).

6.1.7 Printer (optional).

6.2 Wherever possible, use glass transmission lines in the analytical cartridge and colorimeter. Glass yields a more uniform sample flow and does not degrade as quickly as other tubing materials. When connecting two glass lines, ensure that the ends are abutted. To minimize pulsing of the analytical stream, maintain uniform inside diameter throughout all transmission tubing. Flexible transmission tubing should have an inside diameter of 1.3 mm (0.051 inches). Minimize the length of all transmission tubing to optimize the performance of the hydraulic system.

6.3 Enclose the sampler with a dust cover to prevent contamination.

6.4 To prevent the intake of any precipitates from the reagents, install intake filters at the end of the transmission lines that are used to transport the reagents from their respective containers to the proportioning pump.

6.5 LABORATORY FACILITIES -- Laboratories used for the analysis of wet deposition samples should be free from external sources of contamination. The use of laminar flow clean air workstations is recommended for sample processing and preparation to avoid the introduction of airborne contaminants. Samples should always be capped or covered prior to analysis. A positive pressure environment within the laboratory is also recommended to minimize the introduction of external sources of contaminant gases and particulates. Windows within the laboratory should be kept closed at all times and sealed if air leaks are apparent. The use of disposable tacky floor mats at the entrance to the laboratory is helpful in reducing the particulate loading within the room.

7. REAGENTS AND CONSUMABLE MATERIALS

7.1 PURITY OF REAGENTS -- Use reagent grade chemicals for all solutions. All reagents shall conform to the specifications of the Committee on Analytical Reagents of the American Chemical Society (ACS), where such specifications are available.

7.2 PURITY OF WATER -- Use water conforming to ASTM Specification D 1193, Type II (14.3). Point of use 0.2 micrometer filters are recommended for all faucets supplying water to prevent the introduction of bacteria and/or ion exchange resins into reagents, standard solutions, and internally formulated quality control check solutions.

7.3 AMMONIUM MOLYBDATE SOLUTION -- Dissolve 40 g of ammonium molybdate ($(NH_4)_6Mo_7O_{24} \cdot 4H_2O$) in water (Sect. 7.2) and dilute to 1 L. Store at room temperature in a high density polyethylene or polypropylene container.

7.4 ANTIMONY POTASSIUM TARTRATE SOLUTION -- Dissolve 3 g of antimony potassium tartrate ($K(SbO)C_4H_4O_6 \cdot 1/2H_2O$) in water (Sect. 7.2) and dilute to 1 L. Store at room temperature in a high density polyethylene or polypropylene container.

7.5 ASCORBIC ACID SOLUTION -- Dissolve 9.0 g of ascorbic acid ($C_6H_8O_6$) in water (Sect. 7.2) and dilute to 500 mL. This solution is stable for two weeks when refrigerated at 4°C in a high density polyethylene or polypropylene container.

7.6 HYDROCHLORIC ACID (1.0 N) -- Add 83.0 mL of concentrated hydrochloric acid (HCl, sp gr 1.19) to 900 mL of water (Sect. 7.2) and dilute to 1 L.

7.7 ORTHOPHOSPHATE SOLUTION, STOCK (1.0 mL = 0.1 mg PO_4) -- Dissolve 143.47 mg of potassium phosphate (KH_2PO_4), dried at 105°C for one hour, in water (Sect. 7.2). Add 1 mL of chloroform ($CHCl_3$) and dilute to 1 L with water (Sect. 7.2). This solution is stable for one year when stored in a glass or a high density polyethylene or polypropylene container at 4°C.

7.8 SULFURIC ACID (4.9 N) -- Add 136 mL of concentrated sulfuric acid (H_2SO_4 sp gr 1.84) to 800 mL of water (Sect. 7.2). Allow the solution to cool and dilute to 1 L.

7.9 COLOR REAGENT -- Allow all solutions to reach room temperature before combining as follows: to 50 mL of sulfuric acid add 15 mL of ammonium molybdate solution, 30 mL of ascorbic acid solution, and 5 mL of antimony potassium tartrate solution. Add approximately 50 uL of Levor V or a similar wetting agent that does not contain orthophosphate. The color reagent will remain relatively stable in a high density polyethylene or polypropylene container for eight hours. This reagent does, however, slowly degrade over an eight hour period resulting in decreased sensitivity. To better preserve the reagent, place the container in an ice water bath while analyzing samples.

7.10 SAMPLE CONTAINERS -- Use polyolefin sample cups or glass test tubes that have been rinsed thoroughly with water (Sect. 7.2) before use.

8. SAMPLE COLLECTION, PRESERVATION AND STORAGE

8.1 Collect samples in high density polyethylene (HDPE) containers that have been thoroughly rinsed with ASTM Type II water (7.2). Do not use strong mineral acids or alkaline detergent solutions for cleaning collection vessels. Residual acids may remain in the polyethylene matrix and slowly leach back into the sample. Alkaline detergents may also leave residues that may affect the sample chemistry. Cap collection bottles after cleaning to prevent contamination from airborne contaminants; air dry collection buckets in a laminar flow clean air workstation and wrap in polyethylene bags prior to use. If a laminar flow workstation is not available, pour out any residual rinse water and bag the buckets immediately. Do not dry the bucket interior by any method other than air drying in a laminar flow clean air workstation.

8.2 The frequency of sample collection and the choice of sampler design are dependent on the monitoring objectives. In general, the use of wet-only samplers is recommended to exclude dry deposition contributions, minimize sample contamination, retard evaporation, and enhance sample stability. Sample collection frequency may vary from subevent to monthly sampling periods. Collection periods of more than one week are not recommended since sample integrity may be compromised by longer exposure periods.

8.3 The presence of microbial activity will affect the stability of orthophosphate concentrations in wet deposition samples. Sample measurements should be made immediately after collection whenever possible.

8.3.1 Filtration of samples through a 0.45 micrometer membrane leached with water (Sect. 7.2) is partially effective at stabilizing orthophosphate by removal of biological species. Refrigeration after immediate filtration is the most reliable method to ensure sample integrity (14.4). Sample storage time should not exceed one week.

9. CALIBRATION AND STANDARDIZATION

9.1 INSTRUMENT OPTIMIZATION

9.1.1 For a flow segmented system with a concentration range from 0.02-0.25 mg/L as orthophosphate, assemble the sampling and analytical system as shown in Figure 1.

9.1.2 Use flow rated polyvinyl chloride or polyethylene pump and transmission tubing throughout the sampling and analytical system. Check the tubing for chemical buildup, splits, cracks, and deformations before beginning each day's analysis. Change pump tubes after 25 hours of operation. Change transmission tubing after 50 hours of operation or when uneven flow patterns are observed.

9.1.3 Optimize the tension of the pump tubes according to manufacturer's recommendations.

9.1.4 Set the heating bath to 37°C. Set the wavelength of the colorimeter to 880 nm. Allow the colorimeter and heating bath to warm up for 30 minutes while pumping water (Sect. 7.2) and color reagent through the system. After a a stable baseline has been obtained, adjust the recorder to maximize the full-scale response.

9.1.5 Sample at a rate of 30 samples/hour with a 1:4 sample to rinse ratio. This sampling rate provides good peak separation. Adjust the colorimeter to maximize sensitivity while minimizing instrument noise. Refer to the manufacturer's recommendations.

9.2 CALIBRATION SOLUTIONS

9.2.1 Five calibration solutions and one zero standard are needed to generate a suitable calibration curve. The lowest calibration solution should contain orthophosphate at a concentration greater than or equal to the method detection limit. The highest solution should approach the expected upper limit of concentration of orthophosphate in wet deposition. Prepare the remaining solutions such that they are evenly distributed throughout the concentration range. Suggested calibration standards for orthophosphate are as follows: zero, 0.02, 0.04, 0.06, 0.08, and 0.10 mg/L as PO_4^{-3}.

9.2.2 Prepare all calibration standards by diluting the stock solution (Sect. 7.7) with water (Sect. 7.2). Use glass (Class A) or plastic pipettes that are within the bias and precision tolerances specified by the manufacturer. Standards with a concentration greater than 0.04 mg/L orthophosphate are stable for one week if stored at room temperature in high density polyethylene or polypropylene containers. Prepare standards with 0.04 mg/L or less orthophosphate every day and store at room temperature in high density polyethylene or polypropylene containers.

9.3 CALIBRATION CURVE

9.3.1 Analyze the standard containing the highest concentration of orthophosphate and adjust the colorimeter calibration control to obtain full-scale deflection on the recorder. If a printer is used, adjust it to read the correct concentration. Analyze all the standards and construct a calibration curve according to Sect. 12. After every 30 samples and at the end of the day's analyses, reconstruct the entire calibration curve.

9.3.2 Verify the calibration curve after every ten samples and at the end of each day's analyses according to Sect. 10.5.

10. QUALITY CONTROL

10.1 Each laboratory using this method should develop formalized quality control protocols to continually monitor the bias and precision of all measurements. These protocols are required to ensure that the measurement system is in a state of statistical control. Estimates of bias and precision for wet deposition analyses cannot be made unless these control procedures are followed. Detailed guidelines for the development of quality assurance and quality control protocols for wet deposition measurement systems are published in a manual available from the United States Environmental Protection Agency, Research Triangle Park, NC 27711 (14.5). Included in this manual are procedures for the development of statistical control charts for use in monitoring bias and precision as well as recommendations for the introduction of reagent blanks, laboratory duplicates, field duplicates, spike samples, and performance evaluation samples. These guidelines are to be used by all laboratories involved with wet deposition measurements.

10.2 ESTABLISHMENT OF WARNING AND CONTROL LIMITS -- Warning and control limits are used to monitor drift in the calibration curve, analyses of quality control check samples (QCS), and measured recoveries from laboratory spikes.

10.2.1 Calibration Curve -- After a calibration curve has been constructed according to Sect. 12, reanalyze additional aliquots of the low and high concentration standards. Calculate the concentrations using the previously derived calibration curve. Repeat this procedure until at least ten determinations at each concentration level have been made. These data should be collected on ten different days to provide a realistic estimate of the method variability. Calculate a standard deviation (s) at each concentration level. Use the nominal standard concentration as the mean value ($\bar{x}$) for determining the control limits. A warning limit of $\bar{x} \pm 2s$ and a control limit of $\bar{x} \pm 3s$ should be used. Reestablish these limits whenever instrumental operating conditions change.

10.2.2 Quality Control Check Samples (QCS) -- Calculate warning and control limits for QCS solutions from a minimum of ten analyses performed on ten days. Use the calculated standard deviation (s) at each QCS concentration level to develop the limits as described in Sect. 10.2.1. Use the certified or NBS traceable concentration as the mean (target) value. Constant positive or negative measurements with respect to the true value are indicative of a method or procedural bias. Utilize the data obtained from QCS measurements as in Sect. 10.4 to determine when the measurement system is out of statistical control. The standard deviations used to generate the QCS control limits should be comparable to the single operator precision reported in Table 2. Reestablish new warning and control limits whenever instrumental operating conditions are varied or QCS concentrations are changed.

10.2.3 Laboratory Spike Solutions -- A minimum of ten analyte spikes of wet deposition samples is required to develop a preliminary data base for the calculation of warning and control limits for spike recovery data. Select the spike concentration such that the working range of the method will not be exceeded. Samples selected for the initial spike recovery study should represent the concentration range common to wet deposition samples in order to reliably estimate the method accuracy. Calculate a mean and standard deviation of the percent recovery data using the formulas provided in the glossary. Determine warning and control limits using $\pm 2s$ and $\pm 3s$, respectively. If the data indicate that no significant method bias exists (14.6), the 100 percent recovery is used as the mean percent recovery. Where a significant bias is determined at the 95% confidence level, the control limits are centered around the bias estimate. Routine spiked sample analyses that yield percent recovery data outside of the control limits are an indication of matrix interferences that should be resolved before routine analyses are continued.

10.2.4 All warning and control limits should be reevaluated on a continual basis as additional data are collected during routine analyses. The limits should be broadened or narrowed if a recalculated standard deviation under similar operating conditions provides a different estimate of the procedure variability.

10.3 Monitor the cleaning procedure by pouring a volume of water (Sect. 7.2) that approximates the median sample size into the collection vessel. Allow the water to remain in the sealed or capped collection container for at least 24 hours and determine the orthophosphate concentration. If the solution concentration exceeds the MDL, a contamination problem is indicated in the cleaning procedure. Take corrective action before the sampling containers are used for the collection of wet deposition.

10.4 Analyze a quality control check sample (QCS) after the calibration curve has been established. This sample may be formulated in the laboratory or obtained from the National Bureau of Standards (NBS Standard Reference Material 2694, Simulated Rainwater). Verify the accuracy of internally formulated QCS solutions with an NBS traceable standard before acceptance as a quality control check. The check sample(s) selected must be within the range of the calibration standards. If the measured value for the QCS falls outside of the $\pm 3s$ limits (Sect. 10.2.2), or if two successive QCS checks are outside of the $\pm 2s$ limits, a problem is indicated with the system or the calibration procedure. Corrective action should be initiated to bring the results of the QCS within the established control limits. Plot the data obtained from the QCS checks on a control chart for routine assessments of bias and precision.

10.5 Verify the calibration curve after a maximum of ten samples and at the end of each day's analyses. Analyze calibration standards at the low and high ends of the working range. If the routine calibration checks do not meet the criteria described in Sect. 10.4, recalibrate the system and reanalyze all samples from the last time the system was in control. Verify the new calibration curve with the QCS according to Sect. 10.4 and reanalyze all samples measured since the last time the system was in control.

10.6 Submit a Field Blank (FB) to the laboratory for every 20 samples. The FB may consist of a water sample (Sect. 7.2) or a known reference solution that approximates the concentration levels characteristic of wet deposition. The FB is poured into the sampling vessel at the field site and undergoes identical processing and analytical protocols as the wet deposition sample(s). Use the analytical data obtained from the FB to determine any contamination introduced in the field and laboratory handling procedures. The data from the known reference solution can be used to calculate a system precision and bias.

10.7 Prepare and analyze a laboratory spike of a wet deposition sample according to the guidelines provided in "Quality Assurance Manual for Precipitation Measurement Systems" (14.5). Compare the results obtained from spiked samples to those obtained from identical samples to which no spikes were added. Use these data to monitor the method percent recovery as described in Sect. 10.2.3.

10.8 Participation in performance evaluation studies is recommended for wet deposition chemistry laboratories. The samples used for these performance audits should contain the analytes of interest at concentrations within the normal working range of the method. The true values are unknown to the analyst. Performance evaluation studies for wet deposition chemistry laboratories are conducted semiannually by the USEPA Performance Evaluation Branch, Quality Assurance Division, Research Triangle Park, NC 27711.

11. PROCEDURE

11.1 Optimize the instrument each day according to Sect. 9.1.

11.2 Prepare all standards and construct a calibration curve according to Sect. 9.2 and 9.3.

11.3 After the calibration curve is established, analyze the QCS. If the measured value for the QCS is not within the specified limits (Sect. 10.2.2), refer to Sect. 10.4.

11.4 Load the sampler tray and begin analysis.

11.5 If the peak height response exceeds the working range of the system, dilute the sample with zero standard and reanalyze.

11.6 When analysis is complete, turn off the heating bath and rinse the system with 1 N HCl for 15 minutes. Rinse the system with water (Sect. 7.2) for an additional 15 minutes.

12. CALCULATIONS

12.1 Calculate a linear least squares fit of the standard concentration as a function of the measured peak height. The linear least squares equation is expressed as follows:

$$y = B_0 + B_1 x$$

where: y = standard concentration in mg/L
x = peak height measured
B_0 = y-intercept calculated from: $\bar{y} - B_1\bar{x}$
B_1 = slope calculated from:

$$\sum_{i=1}^{n} (x_i - \bar{x})(y_i - \bar{y}) / \sum_{i=1}^{n} (x_i - \bar{x})^2$$

where: $\bar{x}$ = mean of peak heights measured
$\bar{y}$ = mean of standard concentrations
n = number of samples

The correlation coefficient should be 0.9990 or greater. Determine the concentration of analyte of interest from the calibration curve.

12.2 If the relationship between standard concentration and measured peak height is nonlinear, use a second degree polynomial least squares equation to derive a curve with a correlation $\geq$0.9990. The second degree polynomial equation is expressed as follows:

$$y = B_2x^2 + B_1x + B_0$$

A computer is necessary for the derivation of this function. Determine the concentration of orthophosphate from the calibration curve.

12.3 An integration system may also be used to provide a direct readout of the concentration of orthophosphate.

12.4 Report data in mg/L as PO_4^{-3}. Do not report data lower than the lowest calibration standard.

13. PRECISION AND BIAS

13.1 The mean percent recovery and mean bias of this method were determined from the analysis of spiked wet deposition samples according to ASTM Standard Practice D4210, Annex A4 (14.6). The results are summarized in Table 1. A small but statistically significant bias of -0.01 mg/L was found at both spike concentration levels.

13.2 Single-operator precision and bias were obtained from the analysis of quality control check samples. These results reflect the accuracy that can be expected when the method is used by a competent operator. These data are presented in Table 2.

14. REFERENCES

14.1 Annual Book of ASTM Standards, Part 31, "Excerpts from Standard for Metric Practice," Standard E 380-79, 1982, pp. 679-694.

14.2 "Safety in Academic Chemistry Laboratories," American Chemical Society Publication, Committee on Chemical Safety, 3rd Edition, 1979.

14.3 Annual Book of ASTM Standards, Part 31, "Standard Specification for Reagent Water," Standard D 1193-77, 1982, p. 39.

14.4 Peden, M. E. and Skowron, L. M., "Ionic Stability of Precipitation Samples," Atmos. Environ. **12**, 1978, pp. 2343-2349.

14.5 Topol, L. E., Lev-On, M., Flanagan, J., Schwall, R. J., Jackson, A. E., Quality Assurance Manual for Precipitation Measurement Systems, 1985, U.S. Environmental Protection Agency, Environmental Monitoring Systems Laboratory, Research Triangle Park, NC 27711.

14.6 Annual Book of ASTM Standards, Section 11, **Vol. 11.01 (1)**, "Practice for Intralaboratory Quality Control Procedures and a Discussion of Reporting Low-Level Data," Standard D4210 Annex A4, 1983, pp. 15-16.

Table 1. Single-Operator Precision and Bias for Orthophosphate Determined from Analyte Spikes of Wet Deposition Samples.[a]

Analyte	Amount Added, mg/L	n[b]	Mean Percent Recovery	Mean Bias, mg/L	Standard Deviation, mg/L	Statistically Significant Bias?[c]
Ortho-phosphate	0.061	10	81.0	-0.012	0.002	Yes
	0.159	9	92.7	-0.012	0.004	Yes

a. Concentration values are significant to two decimal places.
b. Number of replicates
c. 95% Confidence Level

Table 2. Single-Operator Bias and Precision for Orthophosphate Determined from Quality Control Check Samples.[a]

Theoretical Concentration, mg/L	Measured Concentration, mg/L	n[b]	Bias, mg/L	Bias, %	Precision, s, mg/L	Precision, RSD, %
0.031	0.026	151	-0.005	-16.1	0.007	26.9
0.062	0.055	161	-0.007	-11.3	0.008	14.5
0.123	0.117	84	-0.006	-4.9	0.006	5.1
0.215	0.205	74	-0.010	-4.6	0.010	4.9

The above data were obtained from records of measurements made under the direction of the NADP/NTN quality assurance program.

a. Concentration values are significant to two decimal places.
b. Number of replicates

Figure 1. Orthophosphate Sampling and Analytical System -- Segmented Flow.

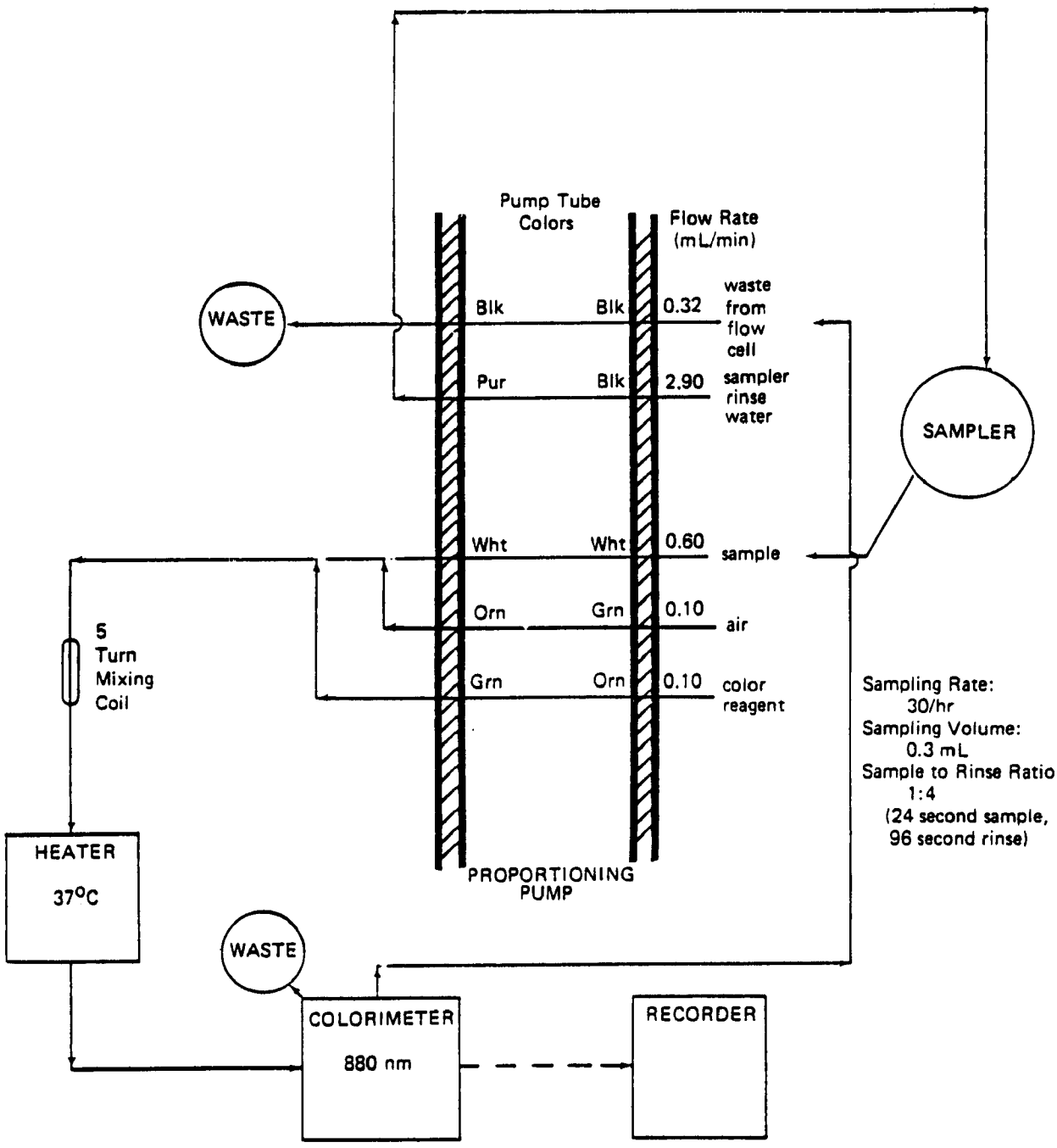

Appendix K

METHOD 340.6 -- FLUORIDE IN WET DEPOSITION BY POTENTIOMETRIC DETERMINATION USING AN ION-SELECTIVE ELECTRODE

Method 340.6 -- Fluoride in Wet Deposition by Potentiometric Determination Using an Ion-Selective Electrode

March 1986

Performing Laboratory:

Kenni O. James
Carla Jo Brennan
Mark E. Peden

Illinois State Water Survey
Analytical Chemistry Unit
2204 Griffith Drive
Champaign, Illinois 61820

Sponsoring Agency:

John D. Pfaff, Project Officer

Inorganic Analysis Section
Physical and Chemical Methods Branch
United States Environmental Protection Agency
Office of Research and Development
Environmental Monitoring and Support Laboratory
Cincinnati, Ohio 45268

INDEX

Section Number	Subject
1	Scope and Application
2	Summary of Method
3	Definitions
4	Interferences
5	Safety
6	Apparatus and Equipment
7	Reagents and Consumable Materials
8	Sample Collection, Preservation, and Storage
9	Calibration and Standardization
10	Quality Control
11	Procedure
12	Calculations
13	Precision and Bias
14	References

TABLES

1. Values for 2.3026 RT/F at Different Temperatures.
2. Single-Operator Precision and Bias for Fluoride Determined from Analyte Spikes of Wet Deposition Samples.
3. Single-Operator Precision and Bias for Fluoride Determined from Quality Control Check Samples.

1. SCOPE AND APPLICATION

1.1 This method is applicable to the potentiometric determination of fluoride in wet deposition samples using an ion-selective electrode as the sensor.

1.2 The term "wet deposition" is used in this method to designate rain, snow, dew, sleet, and hail.

1.3 The method detection limit (MDL) determined from replicate analyses of a quality control check solution containing 0.011 mg/L fluoride is 0.003 mg/L. The concentration range over which this method is applicable is 0.003-0.10 mg/L as F^-.

1.4 Fluoride concentrations in wet deposition samples range from 0.003-1.00 mg/L. Average concentrations are in the range of 0.01-0.10 mg/L. Fluoride concentrations as high as 10.00 mg/L have been reported in wet deposition samples collected near industrial sources (14.1).

2. SUMMARY OF METHOD

2.1 Ion-selective electrodes approximate the concentration of specific ions in solution according to the electrode potential that develops across the sensing membrane. In the case of the fluoride electrode, this potential, which depends on the level of free fluoride ion in solution, is measured against a constant reference potential. The measured potential corresponding to the level of fluoride ion in solution is described by the Nernst equation:

$$E = E_o - \frac{2.3026\ RT}{nF} \log [F]$$

where:
- E = measured electrode potential
- E_o = reference potential (a constant)
- R = gas constant
- T = absolute temperature [$T(^oC) + 273$]
- F = Faraday's constant
- n = number of electrons transferred
- $[F]$ = molar concentration of fluoride in solution

Values of the factor 2.3026 RT/F at different temperatures are provided in Table 1. The meter and the associated fluoride and reference electrode are calibrated with standard fluoride solutions. A calibration curve is constructed from which the concentration of fluoride in a wet deposition sample is determined.

3. DEFINITIONS

3.1 For definitions of terms used in this method, refer to the glossary. For an explanation of the metric system including units, symbols, and conversion factors see American Society for Testing and Materials (ASTM) Standard E 380, "Metric Practices" (14.2).

4. INTERFERENCES

4.1 The sample pH must be >5 to avoid complexation by hydrogen ions and <7 to avoid hydroxide interference. The addition of total ionic strength adjustment buffer (TISAB II) to samples will eliminate this potential source of error as well as eliminate possible interferences from aluminum and iron complexation.

5. SAFETY

5.1 The calibration standards, sample types, and most of the reagents used in this method pose no hazard to the analyst. Use a fume hood, protective clothing, and safety glasses when handling sodium hydroxide (Sect. 7.4) and glacial acetic acid (Sect. 7.5).

5.2 Follow American Chemical Society guidelines regarding the safe handling of chemicals used in this method (14.3).

6. APPARATUS AND EQUIPMENT

6.1 SPECIFIC ION OR mV METER -- The meter must have a readability of 0.1 mV with an analog or digital display. A meter that has separate calibration and slope adjustment features and is electrically shielded to avoid interferences from stray currents or static charge is necessary. It may be powered by battery or by 110 VAC. If battery powered, the meter must have a battery check feature. A temperature compensator control to provide accurate measurements at temperatures other than 25°C is desirable.

6.2 SENSING ELECTRODE -- The most commonly used fluoride electrode consists of a single-crystal lanthanum fluoride membrane which is an ionic conductor in which only fluoride ions are mobile. Select an electrode with a concentration range of 0.01 to 1.00 mg/L, a temperature range of 20°-30°C, and a reproducibility of ±2%. Store the electrode according to manufacturer's guidelines.

6.3 REFERENCE ELECTRODE -- Select a single junction Ag/AgCl sleeve type reference electrode for analysis. Store the electrode according to manufacturer's guidelines.

6.4 COMBINATION FLUORIDE ION-SELECTIVE ELECTRODE -- Due to sample volume limitations in wet deposition samples, a combination fluoride electrode that contains both the sensing and the reference elements in one probe is recommended over using two separate electrodes. Use a combination electrode with a single junction Ag/AgCl sleeve type reference element (Orion #96-09 or equivalent). When not in use, store the combination fluoride electrode according to manufacturer's guidelines.

6.5 STIRRING DEVICE (electric or water-driven) -- If an electric stirrer is selected, place an air gap or insulating pad between the stirrer surface and the solution container to minimize heating of the sample. Use a Teflon-coated stirring bar.

6.6 THERMOMETER -- Select a thermometer capable of being read to the nearest 1°C and covering the range 0°-40°C.

6.7 LABORATORY FACILITIES -- Laboratories used for the analysis of wet deposition samples should be free from external sources of contamination. The use of laminar flow clean air workstations is recommended for sample processing and preparation to avoid the introduction of airborne contaminants. Samples should always be capped or covered prior to analysis. A positive pressure environment within the laboratory is also recommended to minimize the introduction of external sources of contaminant gases and particulates. Windows within the laboratory should be kept closed at all times and sealed if air leaks are apparent. The use of disposable tacky floor mats at the entrance to the laboratory is helpful in reducing the particulate loading within the room.

7. REAGENTS AND CONSUMABLE MATERIALS

7.1 PURITY OF REAGENTS -- Use reagent grade chemicals for all solutions. All reagents shall conform to the specifications of the Committee on Analytical Reagents of the American Chemical Society (ACS), where such specifications are available.

7.2 PURITY OF WATER -- Use water conforming to ASTM Specification D 1193 Type II (14.4). Point of use 0.2 micrómeter filters are recommended for all faucets supplying water to prevent the introduction of bacteria and/or ion exchange resins into reagents, standard solutions, and internally formulated quality control check solutions.

7.3 FLUORIDE SOLUTION, STOCK (1.0 mL = 1.0 mg F) -- The stock solution may be purchased as a certified solution or prepared from ACS reagent grade materials. To prepare, dissolve 0.221 g of anhydrous sodium fluoride (NaF) in water (Sect. 7.2) and dilute to 1 L. Store at room temperature in a high density polyethylene or polypropylene container.

7.4 SODIUM HYDROXIDE SOLUTION (5.0 N) -- Dissolve 200.0 g of sodium hydroxide (NaOH) slowly in 500 mL of water (Sect. 7.2). Cool to room temperature and dilute to 1 L with water (Sect. 7.2).

7.5 TOTAL IONIC STRENGTH ADJUSTMENT BUFFER (TISAB II for low level measurements) -- Add 57.0 mL of glacial acetic acid (CH_3COOH), 4.0 g of cyclohexylene dinitrilo tetraacetic acid (CDTA), and 58.0 g of sodium chloride (NaCl) to 500 mL of water (Sect. 7.2). Stir to dissolve and cool to room temperature. Add 150 mL of 5 N NaOH. Cool to room temperature and dilute to 1 L with water (Sect. 7.2). Store at room temperature in a polyolefin container. Add to standards and samples as directed in Sect. 9.5.2 and Sect. 11.4 to provide a constant background ionic strength and to maintain the pH of the solution between 5.0 and 5.5.

7.5 SAMPLE CONTAINERS -- Use polyolefin sample cups that have been rinsed thoroughly with water (Sect. 7.2) before use.

8. SAMPLE COLLECTION, PRESERVATION AND STORAGE

8.1 Collect samples in high density polyethylene (HDPE) containers that have been thoroughly rinsed with ASTM Type II water (7.2). Do not use strong mineral acids or alkaline detergent solutions for cleaning collection vessels. Residual acids may remain in the polyethylene matrix and slowly leach back into the sample. Alkaline detergents may also leave residues that may affect the sample chemistry. Cap collection bottles after cleaning to prevent contamination from airborne contaminants; air dry collection buckets in a laminar flow clean air workstation and wrap in polyethylene bags prior to use. If a laminar flow workstation is not available, pour out any residual rinse water and bag the buckets immediately. Do not dry the bucket interior by any method other than air drying in a laminar flow clean air workstation.

8.2 The frequency of sample collection and the choice of sampler design are dependent on the monitoring objectives. In general, the use of wet-only samplers is recommended to exclude dry deposition contributions, minimize sample contamination, retard evaporation, and enhance sample stability. Sample collection frequency may vary from subevent to monthly sampling periods.

8.3 Fluoride concentrations are stable in natural waters for 28 days when stored at 25°C in high density polyethylene or polypropylene containers (14.5). No data are available for the stability of fluoride in wet deposition samples.

9. CALIBRATION AND STANDARDIZATION

9.1 Turn on the meter and allow it to warm up according to manufacturer's instructions. If an ion selective meter is used, set the function switch to detect monovalent anions.

9.2 If necessary, add filling solution supplied by the manufacturer to the electrode before using. Maintain the filling solution level at least one inch above the level of the sample surface to ensure proper electrolyte flow rate.

9.3 Bring all standards and samples to ambient temperature before beginning any analyses. Maintain samples and standard solutions within ±1°C of each other and maintain operating temperatures of 25 ± 2°C (14.6). The absolute potential of the reference electrode changes slowly with temperature because of the solubility equilibrium upon which the electrode depends. The slope of the fluoride electrode also varies with temperature as indicated in the Nernst equation in Sect. 2.1.

9.4 CALIBRATION SOLUTIONS

9.4.1 Five calibration solutions and one zero standard are needed to generate a suitable calibration curve. The lowest calibration solution should contain fluoride at a concentration greater than or equal to the method detection limit. The highest solution should approach the expected upper limit of concentration of fluoride in wet deposition. Prepare the remaining solutions such that they are evenly distributed throughout the concentration range. Suggested calibration standards for fluoride are as follows: zero, 0.01, 0.03, 0.05, 0.07, and 0.10 mg/L as F^-.

9.4.2 Prepare all calibration standar[illegible] diluting the stock standard (Sect. 7.3) with water (S[illegible] . 7.2). Use glass (Class A) or plastic pipettes that are within the bias and precision tolerances specified by the manufacturer. The standards are stable for one month when stored at room temperature in high density polyethylene or polypropylene containers.

9.5 ELECTRODE SLOPE -- Check the electrode slope daily before any analyses are performed. Use two fluoride solutions that differ from one another in concentration by a factor of ten and are within the working concentration range. Suitable solutions to be used for this procedure are the 0.01 and 0.10 mg/L calibration standards prepared in Sect. 9.4.1.

9.5.1 Rinse the sample cup with three changes of water (Sect. 7.2). Pipette a minimum of 5 mL of 0.01 mg/L calibration standard into the sample cup. Add TISAB II in a 1:1 volumetric ratio and equilibrate for at least 15 minutes for complete Al^{+3} and Fe^{+3} complexation. Rinse the electrode(s) with three changes of water (Sect. 7.2) or with a flowing stream from a wash bottle. Blot the electrode(s) dry with a clean laboratory tissue and immerse into the 0.01 mg/L standard to which TISAB II has been added. Stir the solution and maintain a stirring rate of approximately 4 revolutions per second (rps) throughout the analysis. Allow the electrode about three minutes to stabilize. Adjust the calibration control until the display reads "1" if a specific ion meter is used or until the display reads 0.0 if a mV meter is used.

9.5.2 Dispense an aliquot of 0.10 mg/L calibration standard into a second clean sample cup, add TISAB II, and allow to equilibrate as directed in Sect. 9.5.1. Rinse the electrode(s), blot dry, immerse in the solution, and stir as directed in Sect 9.5.1. Allow the electrode about three minutes to stabilize. If a mV meter is used, correct electrode performance is indicated by a reading of -57 ± 3 mV. If a specific ion meter is used, use the slope adjustment feature to set the display to read "10".

9.5.3 If the slope is not within the acceptable range indicated in Sect. 9.5.2, refer to the electrode instruction manual for corrective action.

9.6 CALIBRATION CURVE

9.6.1 Rinse the sample cup with three changes of water (Sect. 7.2). Pipette an aliquot of zero standard into the sample cup. Add TISAB II in a 1:1 volumetric ratio and equilibrate for at least 15 minutes for complete Al^{+3} and Fe^{+3} complexation. Rinse the electrode(s) with three changes of water (Sect. 7.2) or with a flowing stream from a wash bottle. Blot the electrode(s) dry with a clean laboratory tissue and immerse into the zero standard to which TISAB II has been added. Stir the solution and maintain a stirring rate of approximately 4 rps throughout the analysis. Allow sufficient time for the reading to remain steady within $\pm$0.01 mg/L or 0.1 mV (depending on the type of meter used) for 30 seconds. When the meter reading is stable, record the measurement.

9.6.2 Analyze the remaining standards in order of increasing fluoride concentration, measuring the most concentrated standard last. Rinse the electrode(s) between standards. Construct a calibration curve according to Sect. 12.

9.6.3 Verify the calibration curve after every ten samples and at the end of each day's analyses according to Sect. 10.6.

10. QUALITY CONTROL

10.1 Each laboratory using this method should develop formalized quality control protocols to continually monitor the bias and precision of all measurements. These protocols are required to ensure that the measurement system is in a state of statistical control. Estimates of bias and precision for wet deposition analyses cannot be made unless these control procedures are followed. Detailed guidelines for the development of quality assurance and quality control protocols for wet deposition measurement systems are published in a manual available from the United States Environmental Protection Agency, Research Triangle Park, NC 27711 (14.7). Included in this manual are procedures for the development of statistical control charts for use in monitoring bias and precision as well as recommendations for the introduction of reagent blanks, laboratory duplicates, field duplicates, spike samples, and performance evaluation samples. These guidelines are to be used by all laboratories involved with wet deposition measurements.

10.2 ESTABLISHMENT OF WARNING AND CONTROL LIMITS -- Warning and control limits are used to monitor drift in the calibration curve, analyses of quality control check samples (QCS), and measured recoveries from laboratory spikes.

10.2.1 Calibration Curve -- After a calibration curve has been constructed according to Sect. 12, reanalyze additional aliquots of the low and high concentration standards. Calculate the concentrations using the previously derived calibration curve. Repeat this procedure until at least ten determinations at each concentration level have been made. These data should be collected on ten different days to provide a realistic estimate of the method variability. Calculate a standard deviation (s) at each concentration level. Use the nominal standard concentration as the mean value ($\bar{x}$) for determining the control limits. A warning limit of $\bar{x} \pm 2s$ and a control limit of $\bar{x} \pm 3s$ should be used. Reestablish these limits whenever instrumental operating conditions change.

10.2.2 Quality Control Check Samples (QCS) -- Calculate warning and control limits for QCS solutions from a minimum of ten analyses performed on ten days. Use the calculated standard deviation (s) to develop the limits as described in Sect. 10.2.1. Use the certified or NBS traceable concentration as the mean (target) value. Constant positive or negative measurements with respect to the true value are indicative of a method or procedural bias. Utilize the data obtained from QCS measurements as in Sect. 10.5 to determine when the measurement system is out of statistical control. The standard deviations used to generate the QCS control limits should be comparable to the single operator precision reported in Table 3. Reestablish new warning and control limits whenever instrumental operating conditions are varied or QCS concentrations are changed.

10.2.3 Laboratory Spike Solutions -- A minimum of ten analyte spikes of wet deposition samples is required to develop a preliminary data base for the calculation of warning and control limits for spike recovery data. Select the spike concentration such that the working range of the method will not be exceeded. Samples selected for the initial spike recovery study should represent the concentration range common to wet deposition samples in order to reliably estimate the method accuracy. Calculate a mean and standard deviation of the percent recovery data using the formulas provided in the glossary. Determine warning and control limits using $\pm 2s$ and $\pm 3s$, respectively. If the data indicate that no significant method bias exists (14.8), the 100 percent recovery is used as the mean percent recovery. Where a significant bias is determined

at the 95% confidence level, the control limits are centered around the bias estimate. Routine spiked sample analyses that yield percent recovery data outside of the control limits are an indication of matrix interferences that should be resolved before routine analyses are continued.

10.2.4 All warning and control limits should be reevaluated on a continual basis as additional data are collected during routine analyses. The limits should be broadened or narrowed if a recalculated standard deviation under similar operating conditions provides a different estimate of the procedure variability.

10.3 Monitor the cleaning procedure by pouring a volume of water (Sect. 7.2) that approximates the median sample size into the collection vessel. Allow the water (Sect. 7.2) to remain in the sealed or capped collection container for at least 24 hours and determine the fluoride concentration. If the solution concentration exceeds the MDL, a contamination problem is indicated in the cleaning procedure. Take corrective action before the sampling containers are used for the collection of wet deposition.

10.4 Electrodes used for the measurement of wet deposition samples should not be used for other sample types. Solutions with high concentrations of fluoride may cause electrode degradation and result in biased measurements and/or slow response in wet deposition samples. If the sensing element of the electrode becomes coated with organic deposits, longer response times in dilute fluoride solutions will result. Refer to the manufacturer's guidelines for instructions on how to clean the electrode of organic deposits.

10.5 Analyze a quality control check sample (QCS) after the meter and electrode assembly have been calibrated. This sample may be formulated in the laboratory or obtained from the National Bureau of Standards (NBS Standard Reference Material 2694, Simulated Rainwater). Verify the accuracy of internally formulated QCS solutions with an NBS traceable standard before acceptance as a quality control check. The check sample(s) selected must be within the range of the calibration standards and should approximate the range of the samples to be analyzed. If the measured value for the QCS falls outside of the $\pm 3s$ limits (Sect. 10.2.2), or if two successive QCS checks are outside of the $\pm 2s$ limits, a problem is indicated with the calibration procedure or the electrode/meter assembly. Check the meter according to the manufacturer's guidelines. If an electrode problem is indicated, replace the electrode. Plot the data obtained from the QCS checks on a control chart for routine assessments of bias and precision.

10.6 Verify the calibration curve after a maximum of ten samples and at the end of each day's analyses. Analyze calibration standards at the low and high ends of the working range. If the routine calibration checks do not meet the criteria described in Sect. 10.5, recalibrate the system and reanalyze all samples from the last time the system was in control. Verify the new calibration curve with the QCS according to Sect. 10.5 and reanalyze all samples analyzed since the last time the system was in control.

10.7 Submit a Field Blank (FB) to the laboratory for every 20 samples. The FB may consist of a water sample (Sect. 7.2) or a known reference solution that approximates the concentration levels characteristic of wet deposition. The FB is poured into the sampling vessel at the field site and undergoes identical processing and analytical protocols as the wet deposition sample(s). Use the analytical data obtained from the FB to determine any contamination introduced in the field and laboratory handling procedures. The data from the known reference solution can be used to calculate a system precision and bias.

10.8 Prepare and analyze a laboratory spike of a wet deposition sample according to the guidelines provided in "Quality Assurance Manual for Precipitation Measurement Systems" (14.7). Compare the results obtained from the spiked sample to that obtained from an identical sample to which no spike was added. Use these data to determine percent recovery as described in Sect. 10.2.3.

10.9 Participation in performance evaluation studies is recommended for wet deposition chemistry laboratories. The samples used for these performance audits should contain the analytes of interest at concentrations within the normal working range of the method. The true values are unknown to the analyst. Performance evaluation studies for wet deposition chemistry laboratories are conducted semiannually by the USEPA Performance Evaluation Branch, Quality Assurance Division, Research Triangle Park, NC 27711.

11. PROCEDURE

11.1 Prepare all standards and bring solutions and samples to ambient temperature ($\pm 1^{\circ}C$).

11.2 Check electrode slope each day according to Sect. 9.5 and construct a calibration curve according to Sect. 9.6.

11.3 After the calibration curve is established, analyze the QCS. If the measured value for the QCS is not within the specified limits (Sect. 10.2.2), refer to Sect. 10.5.

11.4 SAMPLE ANALYSIS

11.4.1 Rinse the sample cup with three changes of water (Sect. 7.2). Dispense an aliquot of sample equivalent to that used for the calibration standards. Add TISAB II in a 1:1 volumetric ratio and allow the solution to equilibrate for at least 15 minutes.

11.4.2 Rinse the electrode(s) with three changes of water (Sect. 7.2) or with a flowing stream from a wash bottle. Blot dry with a clean, absorbent laboratory tissue. Immerse the clean electrode(s) into the sample and observe the meter reading while mixing. When the reading is steady within $\pm$0.01 mg/L or 0.1 mV (depending on the type of meter used) for 30 seconds, record the measurement.

11.5 TISAB to sample volume ratios of 1:10 have been used successfully for the determination of fluoride in wet deposition samples (14.9). The smaller volume of TISAB used in this procedure provides increased method sensitivity for low level analyses.

11.6 Response times for the electrode assembly may be shortened by preconditioning the electrode(s) (14.10). Immerse the clean electrode(s) into a portion of the wet deposition sample to be analyzed, allow the system to equilibrate for approximately three minutes, and remove the electrode. Insert the electrode(s) directly into a second portion of sample and record the reading when the system is stabilized according to Sect. 11.4.2. This procedure, however, is limited by the amount of wet deposition sample available.

11.7 If the concentration of fluoride in a sample exceeds the working range of the system, dilute the sample with zero standard and reanalyze.

12. CALCULATIONS

12.1 Calculate a linear least squares fit of the standard concentration as a function of the measured concentration. The linear least squares equation is expressed as follows:

$$y = B_0 + B_1 x$$

where: y = standard concentration in mg/L
x = concentration measured
B_0 = y-intercept calculated from: $\bar{y} - B_1\bar{x}$
B_1 = slope calculated from:

$$\sum_{i=1}^{n} (x_i - \bar{x})(y_i - \bar{y}) / \sum_{i=1}^{n} (x_i - \bar{x})^2$$

where: $\bar{x}$ = mean of concentration measured
$\bar{y}$ = mean of standard concentrations
n = number of samples

The correlation coefficient should be 0.9990 or greater. Determine the concentration of fluoride from the calibration curve.

12.2 If the relationship between standard and measured concentration is nonlinear, a second degree polynomial least squares equation can be used to derive an acceptable curve with a correlation $\geq$0.9990. The second degree polynomial equation is expressed as follows:

$$y = B_2x^2 + B_1x + B_0$$

A computer is necessary for the derivation of this function. Determine the concentration of fluoride from the calibration curve.

12.3 An integration system may also be used to provide a direct readout of the concentration of fluoride.

12.4 Report data in mg/L as F^-. Do not report data lower than the lowest calibration standard.

13. PRECISION AND BIAS

13.1 The mean percent recovery and mean bias of this method were determined from the analysis of spiked wet deposition samples according to ASTM Standard Practice D4210, Annex A4 (14.8). The results are summarized in Table 2. A small but statistically significant bias of -0.004 was determined at a spike concentration of 0.027 mg/L. No statistically significant bias was present at a spike concentration of 0.082 mg/L.

13.2 Single-operator precision and bias were obtained from the analysis of quality control check samples that approximated the levels common to wet deposition samples. These results reflect the accuracy that can be expected when the method is used by a competent operator. These data are presented in Table 3.

14. REFERENCES

14.1 Smith, F. A. and Hodge, H. C., "Airborne Fluorides and Man: Part 1," CRC Crit Rev. Envir. Control, 8, 1979, pp. 293-372.

14.2 Annual Book of ASTM Standards, Part 31, "Excerpts from Standard for Metric Practice," Standard E 380-79, 1982, pp. 679-694.

14.3 "Safety in Academic Chemistry Laboratories," American Chemical Society Publication, Committee on Chemical Safety, 3rd Edition, 1979.

14.4 Annual Book of ASTM Standards, Part 31, "Standard Specification for Reagent Water," Standard D 1193-77, 1982, p. 39.

14.5 Handbook for Sampling and Sample Preservation of Water and Wastewater, 1982, U.S. Environmental Protection Agency, Environmental Monitoring and Support Laboratory, EPA-600/4-82-029, Cincinnati, OH 45268.

14.6 Nicholson, K., and Duff, E. J., "Fluoride Determination in Water: An Optimum Buffer System for Use with the Fluoride Selective Electrode," Analytical Letters, 14(A12), 1981, pp. 887-912.

14.7 Topol, L. E., Lev-On, M., Flanagan, J., Schwall, R. J., Jackson, A. E., Quality Assurance Manual for Precipitation Measurement Systems, 1985, U.S. Environmental Protection Agency, Environmental Monitoring Systems Laboratory, Research Triangle Park, NC 27711.

14.8 Annual Book of ASTM Standards, Section 11, **Vol. 11.01 (1)**, "Practice for Intralaboratory Quality Control Procedures and a Discussion of Reporting Low-Level Data," Standard D4210 Annex A4, 1983, pp. 15-16.

14.9 Barnard, Willian R. and Nordstrom, D. Kirk, "Fluoride in Precipitation - I. Methodology with the Fluoride-Selective Electrode," Atmos. Environ., **16**, 1982, pp. 99-103.

14.10 Kissa, Erik, "Determination of Fluoride at Low Concentrations with the Ion-Selective Electrode," Analytical Chemistry, **55**, 1983, pp. 1445-1448.

Table 1. Values for 2.3026 RT/F at Different Temperatures

Temperature, °C	2.3026 RT/F, V
0	0.054
5	0.055
10	0.056
15	0.057
20	0.058
25	0.059
30	0.060
35	0.061
40	0.062
45	0.063

The above data were calculated using a precise value of the logarithmic conversion factor (2.302585) and values of the fundamental constants.

F = 96,487.0 C/eq
R = 8.31433 J/K mol
T = 273.15 + °C

Table 2. Single-Operator Precision and Bias for Fluoride Determined from Analyte Spikes of Wet Deposition Samples.

Analyte	Amount Added, mg/L	n[a]	Mean Percent Recovery	Mean Bias, mg/L	Standard Deviation, mg/L	Statistically Significant Bias?[b]
Fluoride	0.027	10	87.1	-0.004	0.003	Yes
	0.082	10	98.3	-0.001	0.003	No

a. Number of replicates
b. 95% Confidence Level

Table 3. Single-Operator Precision and Bias for Fluoride Determined from Quality Control Check Samples.[a]

Theoretical Concentration, mg/L	Measured Concentration, mg/L	n[b]	Bias, mg/L	Bias, %	Precision, s, mg/L	Precision, RSD, %
0.0112	0.0108	6	-0.0004	-3.6	0.0010	9.2
0.0560	0.0558	7	-0.0001	-0.2	0.0010	1.8

a. Concentration values are significant to three decimal places.
b. Number of replicates

Appendix L

METHOD 350.6 -- AMMONIUM IN WET DEPOSITION BY ELECTROMETRIC DETERMINATION USING ION-SELECTIVE ELECTRODE

METHOD 350.7 -- AMMONIUM IN WET DEPOSITION BY AUTOMATED COLORIMETRIC DETERMINATION WITH PHENATE

Method 350.6 -- Ammonium in Wet Deposition by Electrometric Determination Using an Ion-Selective Electrode

March 1986

Performing Laboratory:

Carla Jo Brennan
Mark E. Peden

Illinois State Water Survey
Analytical Chemistry Unit
2204 Griffith Drive
Champaign, Illinois 61820

Sponsoring Agency:

John D. Pfaff, Project Officer

Inorganic Analysis Section
Physical and Chemical Methods Branch
United States Environmental Protection Agency
Office of Research and Development
Environmental Monitoring and Support Laboratory
Cincinnati, Ohio 45268

INDEX

Section Number	Subject
1	Scope and Application
2	Summary of Method
3	Definitions
4	Interferences
5	Safety
6	Apparatus and Equipment
7	Reagents and Consumable Materials
8	Sample Collection, Preservation, and Storage
9	Calibration and Standardization
10	Quality Control
11	Procedure
12	Calculations
13	Precision and Bias
14	References

TABLES

1. Values for 2.3026 RT/F at Different Temperatures.
2. Single-Operator Bias and Precision for Ammonium Determined from Analyte Spikes of Wet Deposition Samples.
3. Single-Operator Bias and Precision for Ammonium Determined from Quality Control Check Samples.

FIGURES

1. Percentile Concentration Values Obtained from Wet Deposition Samples: Ammonium.

1. SCOPE AND APPLICATION

1.1 This method is applicable to the measurement of ammonium in wet deposition samples using an ion-selective electrode as the sensor.

1.2 The term "wet deposition" is used in this method to designate rain, snow, dew, sleet, and hail.

1.3 The method detection limit (MDL) determined from replicate analyses of a quality control check solution containing 0.17 mg/L ammonium is 0.05 mg/L. The analyte concentration range over which this method is applicable is 0.05-2.00 mg/L as NH_4^+.

1.4 Figure 1 represents a cumulative frequency percentile ammonium concentration plot obtained from analyses of over five thousand wet deposition samples. These values may be used as an aid in the selection of appropriate calibration standard concentrations.

2. SUMMARY OF METHOD

2.1 The pH of a solution is adjusted to between 11 and 14 to convert ammonium ion to ammonia gas. A gas sensing ion-selective electrode approximates the concentration of ammonia in solution according to the electrode potential that develops across the sensing membrane. This potential is measured against a constant reference potential according to the Nernst equation:

$$E = E_o - \frac{2.3026\ RT}{nF} \log [NH_3]$$

where:
- E = measured electrode potential
- E_o = reference potential (a constant)
- R = gas constant
- T = absolute temperature [$T(^oC) + 273$]
- F = Faraday's constant
- n = number of electrons transferred
- $[NH_3]$ = molar concentration of ammonia in solution

Values of the factor 2.3026 RT/F at different temperatures are provided in Table 1. The meter and the ammonia electrode are calibrated with standard ammonium solutions. A calibration curve is constructed from which the concentration of ammonium ion in a wet deposition sample is determined.

3. DEFINITIONS

3.1 For definitions of terms used in this method, refer to the glossary. For an explanation of the metric system including units, symbols, and conversion factors see American Society for Testing and Materials (ASTM) Standard E 380, "Metric Practices" (14.1).

4. INTERFERENCES

4.1 Stirring rates that form a vortex will result in ammonia loss. A stirring rate of approximately two revolutions per second is recommended. Maintain a constant stirring rate throughout analyses of all standards and samples.

5. SAFETY

5.1 The calibration standards, sample types, and most reagents used in this method pose no hazard to the analyst. Use a fume hood, protective clothing, and safety glasses when handling sodium hydroxide (Sect. 7.4).

5.2 Follow American Chemical Society guidelines regarding the safe handling of chemicals used in this method (14.2).

6. APPARATUS AND EQUIPMENT

6.1 SPECIFIC ION OR mV METER -- The meter must have a readability of 0.1 mV with an analog or digital display. A meter that has separate calibration and slope adjustment features and is electrically shielded to avoid interferences from stray currents or static charge is necessary. It may be powered by battery or by 110 VAC; if battery powered, the meter must have a battery check feature.

6.2 AMMONIA ION-SELECTIVE ELECTRODE -- Select a gas-sensing ammonia electrode containing a reference element with a liquid internal filling solution in contact with a hydrophobic gas-permeable membrane. Select an electrode that has a concentration range of 0.05 to 2.00 mg/L ammonium and a temperature range of 20°-30°C with a reproducibility of $\pm$2%. When not in use, store the electrode according to manufacturer's guidelines.

6.3 STIRRING DEVICE (electric or water-driven) -- If an electric stirrer is selected, leave an air gap or place an insulating pad between the stirrer surface and the solution container to prevent heating of the sample. Use a tetrafluoroethylene (TFE)-coated stirring bar.

6.4 THERMOMETER -- Select a thermometer capable of being read to the nearest 1°C and covering the range 0°-40°C.

6.5 LABORATORY FACILITIES -- Laboratories used for the analysis of wet deposition samples should be free from external sources of contamination. The use of laminar flow clean air workstations is recommended for sample processing and preparation to avoid the introduction of airborne contaminants. Samples should always be capped or covered prior to analysis. A positive pressure environment within the laboratory is also recommended to minimize the introduction of external sources of contaminant gases and particulates. Windows within the laboratory should be kept closed at all times and sealed if air leaks are apparent. The use of disposable tacky floor mats at the entrance to the laboratory is helpful in reducing the particulate loading within the room.

7. REAGENTS AND CONSUMABLE MATERIALS

7.1 PURITY OF REAGENTS -- Use reagent grade chemicals for all solutions. All reagents shall conform to the specifications of the Committee on Analytical Reagents of the American Chemical Society (ACS), where such specifications are available.

7.2 PURITY OF WATER -- Use water conforming to ASTM Specification D 1193, Type II (14.3). Point of use 0.2 micrometer filters are recommended for all faucets supplying water to prevent the introduction of bacteria and/or ion exchange resins into reagents, standard solutions and internally formulated quality control check solutions.

7.3 AMMONIUM SOLUTION, STOCK (1.0 mL = 1.0 mg NH_4) -- The stock solution may be purchased as a certified solution or prepared from ACS reagent grade materials. To prepare, dissolve 2.9654 g of ammonium chloride (NH_4Cl), dried at 105°C for 1 hour, in water (Sect. 7.2) and dilute to 1 L. The stock solution is stable for one year when refrigerated at 4°C in a high density polyethylene or polypropylene container.

7.4 SODIUM HYDROXIDE SOLUTION (2.0 N) -- Prepare a dilute sodium hydroxide (NaOH) solution by dissolving 80.0 g of reagent grade sodium hydroxide (NaOH) in water (Sect. 7.2) and diluting to 1 L. Store at room temperature in a high density polyethylene or polypropylene container for a period not exceeding one year.

7.5 SAMPLE CONTAINERS -- Use glass or polyolefin sample cups that have been rinsed thoroughly with water (Sect. 7.2) before use. To reduce the opportunity for ammonia loss to the ambient atmosphere, select sample containers designed to minimize the ratio of surface area to sample volume.

8. SAMPLE COLLECTION, PRESERVATION AND STORAGE

8.1 Collect samples in high density polyethylene (HDPE) containers that have been thoroughly rinsed with ASTM Type II water (7.2). Do not use strong mineral acids or alkaline detergent solutions for cleaning collection vessels. Residual acids may remain in the polyethylene matrix and slowly leach back into the sample. Alkaline detergents may also leave residues that may affect the sample chemistry. Cap collection bottles after cleaning to prevent contamination from airborne contaminants; air dry collection buckets in a laminar flow clean air workstation and wrap in polyethylene bags prior to use. If a laminar flow workstation is not available, pour out any residual rinse water and bag the buckets immediately. Do not dry the bucket interior by any method other than air drying in a laminar flow clean air workstation.

8.2 The frequency of sample collection and the choice of sampler design are dependent on the monitoring objectives. In general, the use of wet-only samplers is recommended to exclude dry deposition contributions, minimize sample contamination, retard evaporation, and enhance sample stability. Sample collection frequency may vary from subevent to monthly sampling periods. Collection periods of more than one week are not recommended since sample integrity may be compromised by longer exposure periods.

8.3 The presence of microbial activity will affect the stability of ammonium concentrations in wet deposition samples. Chemical determinations should be made immediately after collection whenever possible.

8.3.1 Filtration of samples through a 0.45 micrometer membrane leached with water (Sect. 7.2) is partially effective at stabilizing ammonium by removal of biologically active species. Refrigeration after immediate filtration is the most reliable method to ensure sample integrity (14.4). Sample storage time should not exceed one week.

9. CALIBRATION AND STANDARDIZATION

9.1 Turn on the meter and allow it to warm up thoroughly according to the manufacturer's instructions. If an ion selective meter is used, set the function switch to detect monovalent anions.

9.2 If necessary, add filling solution to the electrode before using. To improve electrode response at low concentrations, prepare a 1:10 dilution of the internal filling solution by adding 1 mL of solution to 10 mL of water (Sect. 7.2) (14.5). Maintain the filling solution level at least one inch above the level of the sample surface to ensure proper electrolyte flow rate.

9.3 Bring all standards and samples to ambient temperature before beginning any analyses. Maintain samples and standard solutions within $\pm 1^{\circ}C$ of each other and maintain operating temperatures of $25 \pm 2^{\circ}C$ during analyses to minimize ammonia loss from solutions. The absolute potential of the reference element changes slowly with temperature because of the solubility equilibrium upon which the electrode depends. The slope of the ammonia electrode also varies with temperature as indicated in the Nernst equation in Sect. 2.1.

9.4 CALIBRATION SOLUTIONS

9.4.1 Five calibration solutions and one zero standard are needed to generate a suitable calibration curve. The lowest calibration solution should contain ammonium at a concentration greater than or equal to the method detection limit. The highest solution should approach the expected upper limit of concentration of ammonium in wet deposition. Prepare the remaining solutions such that they evenly encompass the concentration range. Suggested calibration standards for ammonium are as follows: zero, 0.05, 0.50, 1.00, 1.50, and 2.00 mg/L as NH_4^+.

9.4.2 Prepare all calibration standards by diluting the stock standard (Sect. 7.3) with water (Sect. 7.2). Use glass (Class A) or plastic pipettes that are within the bias and precision tolerances specified by the manufacturer. The standards are stable for one week when refrigerated at $4^{\circ}C$ in high density polyethylene or polypropylene containers.

9.5 ELECTRODE SLOPE -- Check the electrode slope daily before any analyses are performed. Use two ammonium solutions that differ from one another in concentration by a factor of ten and are within the range of subsequent ammonium analyses. Suitable solutions to be used for this procedure are the 0.20 and 2.00 mg/L calibration standards prepared in Sect. 9.4.1.

9.5.1 Rinse the electrode and the sample cup with three changes of water (Sect. 7.2) or with a flowing stream from a wash bottle. Immerse the electrode into the 0.20 mg/L calibration standard. Add 1 mL of NaOH solution to 15 mL of standard solution. Stir the solution while maintaining a stirring rate of approximately 2 rps throughout the analysis. Allow the electrode to stabilize for two minutes. Adjust the calibration control until the display reads "1" if a specific ion meter is used or until the display reads 000.0 if a mV meter is used.

9.5.2 Rinse the electrode, add an equal volume aliquot of 2.00 mg/L standard to the sample cup, add 1 mL of NaOH, and stir as directed in Sect. 9.5.1. Allow the electrode to equilibrate for two minutes. If a mV meter is used, correct electrode operation is indicated by a reading of -57 ± 3 mV. If a specific ion meter is used, use the slope adjustment feature to set the display to read "10".

9.5.3 If the slope is not within the acceptable range indicated in Sect. 9.5.2, refer to the electrode instruction manual for corrective action.

9.6 CALIBRATION CURVE

9.6.1 Rinse the electrode and the sample cup with three changes of water (Sect. 7.2) or with a flowing stream from a wash bottle. Immerse the electrode into the zero standard. Add the NaOH solution (1 mL of NaOH:15 mL standard) to adjust the pH of the solution to between 11 and 14. Stir the solution and maintain a stirring rate of approximately 2 rps throughout the analysis. Allow sufficient time for the reading to remain steady within ±0.01 mg/L or 0.1 mV (depending on the meter used) for 30 seconds. When the meter reading is stable, record the measurement.

9.6.2 Rinse the electrode. Analyze the remaining standards in order of increasing ammonium concentration, measuring the most concentrated standard last. Rinse the electrode between standards. Construct a calibration curve according to Sect. 12.

9.6.3 Verify the calibration curve after every ten samples and at the end of each day's analyses according to Sect. 10.6.

10. QUALITY CONTROL

10.1 Each laboratory using this method should develop formalized quality control protocols to continually monitor the bias and precision of all measurements. These protocols are required to ensure that the measurement system is in a state of statistical control. Estimates of bias and precision for wet deposition analyses cannot be made unless these control procedures are followed. Detailed guidelines for the development of quality assurance and quality control protocols for wet deposition measurement systems are published in a manual available from the United States Environmental Protection Agency, Research Triangle Park, NC 27711 (14.6). Included in this manual are procedures for the development of statistical control charts for use in monitoring bias and precision as well as recommendations for the introduction of reagent blanks, laboratory duplicates, field duplicates, spike samples, and performance evaluation samples. These guidelines are to be used by all laboratories involved with wet deposition measurements.

10.2 ESTABLISHMENT OF WARNING AND CONTROL LIMITS -- Warning and control limits are used to monitor drift in the calibration curve, analyses of quality control check samples (QCS), and measured recoveries from laboratory spikes.

10.2.1 Calibration Curve -- After a calibration curve has been constructed according to Sect. 12, reanalyze additional aliquots of the low and high concentration standards. Calculate the concentrations using the previously derived calibration curve. Repeat this procedure until at least ten determinations at each concentration level have been made. These data should be collected on ten different days to provide a realistic estimate of the method variability. Calculate a standard deviation (s) at each concentration level. Use the nominal standard concentration as the mean value ($\bar{x}$) for determining the control limits. A warning limit of $\bar{x} \pm 2s$ and a control limit of $\bar{x} \pm 3s$ should be used. Reestablish these limits whenever instrumental operating conditions change.

10.2.2 Quality Control Check Samples (QCS) -- Calculate warning and control limits for QCS solutions from a minimum of ten analyses performed on ten days. Use the calculated standard deviation (s) to develop the limits as described in Sect. 10.2.1. Use the certified or NBS traceable concentration as the mean (target) value. Constant positive or negative measurements with respect to the true value are indicative of a method or procedural bias. Utilize the data obtained from QCS measurements as in Sect. 10.5 to determine when the measurement system is out of statistical control. The standard deviations used to generate the QCS control limits should be comparable to the single operator precision reported in Table 3. Reestablish new warning and control limits whenever instrumental operating conditions are varied or QCS concentrations are changed.

10.2.3 Laboratory Spike Solutions -- A minimum of ten analyte spikes of wet deposition samples is required to develop a preliminary data base for the calculation of warning and control limits for spike recovery data. Select the spike concentration such that the working range of the method will not be exceeded. Samples selected for the initial spike recovery study should represent the concentration range common to wet deposition samples in order to reliably estimate the method accuracy. Calculate a mean and standard deviation of the percent recovery data using the formulas provided in the glossary. Determine warning and control limits using $\pm 2s$ and $\pm 3s$, respectively. If the data indicate that no significant method bias exists (14.7), the 100 percent recovery is used as the mean percent recovery. Where a significant bias is determined

at the 95% confidence level, the control limits are centered around the bias estimate. Routine spiked sample analyses that yield percent recovery data outside of the control limits are an indication of matrix interferences that should be resolved before routine analyses are continued.

10.2.4 All warning and control limits should be reevaluated on a continual basis as additional data are collected during routine analyses. The limits should be broadened or narrowed if a recalculated standard deviation under similar operating conditions provides a different estimate of the procedure variability.

10.3 Monitor the cleaning procedure by pouring a volume of deionized water that approximates the median sample size into the collection vessel. Allow the water to remain in the sealed or capped collection container for at least 24 hours and determine the ammonium concentration. If the solution concentration exceeds the MDL, a contamination problem is indicated in the cleaning procedure. Take corrective action before the sampling containers are used for the collection of wet deposition.

10.4 Electrodes used for the measurement of wet deposition samples should not be used for other sample types.

10.5 Analyze a quality control check sample (QCS) after the meter and electrode assembly have been calibrated. This sample may be formulated in the laboratory or obtained from the National Bureau of Standards (NBS Standard Reference Material 2694, Simulated Rainwater). Verify the accuracy of internally formulated QCS solutions with an NBS traceable standard before acceptance as a quality control check. The check sample(s) selected must be within the range of the calibration standards and should approximate the range of the samples to be analyzed. If the measured value for the QCS falls outside of the $\pm 3s$ limits (Sect. 10.2.2), or if two successive QCS checks are outside of the $\pm 2s$ limits, a problem is indicated with the calibration procedure or the electrode/meter assembly. Check the meter according to the manufacturer's guidelines. If an electrode problem is indicated, replace the electrode. Plot the data obtained from the QCS checks on a control chart for routine assessments of bias and precision.

10.6 Verify the calibration curve after a maximum of ten samples and at the end of each day's analyses. Analyze calibration standards at the low and high ends of the working range. If the routine calibration checks do not meet the criteria described in Sect. 10.5, recalibrate the system and reanalyze all samples from the last time the system was in control. Verify the new calibration curve with the QCS according to Sect. 10.5 and reanalyze all samples analyzed since the last time the system was in control.

10.7 Submit a Field Blank (FB) to the laboratory for every 20 samples. The FB may consist of a water sample (Sect. 7.2) or a known reference solution that approximates the concentration levels characteristic of wet deposition. The FB is poured into the sampling vessel at the field site and undergoes identical processing and analytical protocols as the wet deposition sample(s). Use the analytical data obtained from the FB to determine any contamination introduced in the field and laboratory handling procedures. The data from the known reference solution can be used to calculate a system precision and bias.

10.8 Prepare and analyze a laboratory spike of a wet deposition sample standard according to the guidelines provided in "Quality Assurance Manual for Precipitation Measurement Systems" (14.6). Compare the results obtained from the spiked sample to that obtained from an identical sample to which no spike was added. Use these data to determine percent recovery as described in Sect. 10.2.3.

10.9 Participation in performance evaluation studies is recommended for wet deposition chemistry laboratories. The samples used for these performance audits should contain the analytes of interest at concentrations within the normal working range of the method. The true values are unknown to the analyst. Performance evaluation studies for wet deposition chemistry laboratories are conducted semiannually by the USEPA Performance Evaluation Branch, Quality Assurance Division, Research Triangle Park, NC 27711.

11. PROCEDURE

11.1 Prepare all standards and bring solutions and samples to ambient temperature ($\pm 1^{\circ}C$).

11.2 Check electrode slope each day according to Sect. 9.5 and construct a calibration curve according to Sect. 9.6.

11.3 To minimize the loss of ammonia from the sample to the ambient atmosphere, do not dispense the samples or standards until immediately before measurement. Do not adjust the pH of the solutions until the electrode is immersed in the sample.

11.4 After the calibration curve is established, analyze the QCS. If the measured value for the QCS is not within the specified limits (Sect. 10.2.2), refer to Sect. 10.5.

11.5 SAMPLE ANALYSIS

11.5.1 Rinse the electrode and the sample cup with three changes of water (Sect. 7.2) or with a flowing stream from a wash bottle.

11.5.2 Measure an aliquot of sample equivalent to that used for the calibration standards. Immerse the clean electrode into the sample and add NaOH (1 mL NaOH:15 mL sample). Stir the solution while maintaining a stirring rate of approximately 2 rps throughout the analysis. Allow sufficient time for the reading to remain steady within $\pm$0.01 mg/L or 0.1 mV (depending on the meter used) for 30 seconds. When the meter reading is stable, record the measurement.

11.6 If the concentration of ammonium in a sample exceeds the working range of the system, dilute the sample with zero standard and reanalyze.

12. CALCULATIONS

12.1 Calculate a linear least squares fit of the standard concentration as a function of the measured concentration. The linear least squares equation is expressed as follows:

$$y = B_0 + B_1 x$$

where: y = standard concentration in mg/L
x = concentration measured
B_0 = y-intercept calculated from: $\bar{y} - B_1\bar{x}$
B_1 = slope calculated from:

$$\sum_{i=1}^{n} (x_i - \bar{x})(y_i - \bar{y}) / \sum_{i=1}^{n} (x_i - \bar{x})^2$$

where: $\bar{x}$ = mean of concentrations measured
$\bar{y}$ = mean of standard concentrations
n = number of samples

The correlation coefficient should be 0.9990 or greater. Determine the concentration of ammonium from the calibration curve.

12.2 An integration system may also be used to provide a direct readout of the concentration of ammonium.

12.3 Report data in mg/L as NH_4^+. Do not report data lower than the lowest calibration standard.

13. PRECISION AND BIAS

13.1 The mean percent recovery and mean bias of this method were determined from the analysis of spiked wet deposition samples according to ASTM Standard Practice D4210, Annex A4 (14.7). The results are summarized in Table 2. A small but statistically significant bias of 0.05 mg/L was determined at a spike concentration of 0.25 mg/L. No statistically significant bias was present at a spike concentration of 0.10 mg/L.

13.2 Single-operator precision and bias were obtained from the analysis of quality control check samples that approximated the levels common to wet deposition samples. These results reflect the accuracy that can be expected when the method is used by a competent operator. These data are presented in Table 3.

14. REFERENCES

14.1 Annual Book of ASTM Standards, Part 31, "Excerpts from Standard for Metric Practice," Standard E 380-79, 1982, pp. 679-694.

14.2 "Safety in Academic Chemistry Laboratories," American Chemical Society Publication, Committee on Chemical Safety, 3rd Edition, 1979.

14.3 Annual Book of ASTM Standards, Part 31, "Standard Specification for Reagent Water," Standard D 1193-77, 1982, p. 39.

14.4 Peden, M. E. and Skowron, L. M., "Ionic Stability of Precipitation Samples," Atmos. Environ. 12, 1978, pp. 2343-2349.

14.5 Orion Research, Inc., "Instruction Manual -- Ammonia Electrode, Model 95-12," Orion Research, Inc., Cambridge, Massachusetts, 1982, pp. 1-17.

14.6 Topol, L. E., Lev-On, M., Flanagan, J., Schwall, R. J., Jackson, A. E., Quality Assurance Manual for Precipitation Measurement Systems, U.S. Environmental Protection Agency, Environmental Monitoring Systems Laboratory, Research Triangle Park, NC 27711.

14.7 Annual Book of ASTM Standards, Section 11, Vol. 11.01 (1), "Practice for Intralaboratory Quality Control Procedures and a Discussion of Reporting Low-Level Data," Standard D4210 Annex A4, 1983, pp. 15-16.

Table 1. Values for 2.3026 RT/F at Different Temperatures.

Temperature, °C	2.3026 RT/F, V
0	0.054
5	0.055
10	0.056
15	0.057
20	0.058
25	0.059
30	0.060
35	0.061
40	0.062
45	0.063

The above data were calculated using a precise value of the logarithmic conversion factor (2.302585) and values of the fundamental constants.

$F = 96{,}487.0$ C/eq
$R = 8.31433$ J/K mol
$T = 273.15 + {}^{\circ}C$

Table 2. Single-Operator Precision and Bias for Ammonium Determined from Analyte Spikes of Wet Deposition Samples.

Analyte	Amount Added, mg/L	n[a]	Mean Percent Recovery	Mean Bias, mg/L	Standard Deviation, mg/L	Statistically Significant Bias?[b]
Ammonium	0.10	10	125.0	0.02	0.02	No
	0.25	8	119.0	0.05	0.01	Yes

a. Number of replicates
b. 95% Confidence Level

Table 3. Single-Operator Bias and Precision for Ammonium Determined from Quality Control Check Samples.

Theoretical Concentration, mg/L	Measured Concentration, mg/L	n[a]	Bias, mg/L	Bias, %	Precision, s, mg/L	Precision, RSD, %
0.18	0.17	12	-0.01	-5.6	0.018	10.6
0.39	0.38	12	-0.01	-2.6	0.025	6.6

a. Number of replicates

Figure 1. Percentile Concentration Values Obtained from Wet Deposition Samples: Ammonium

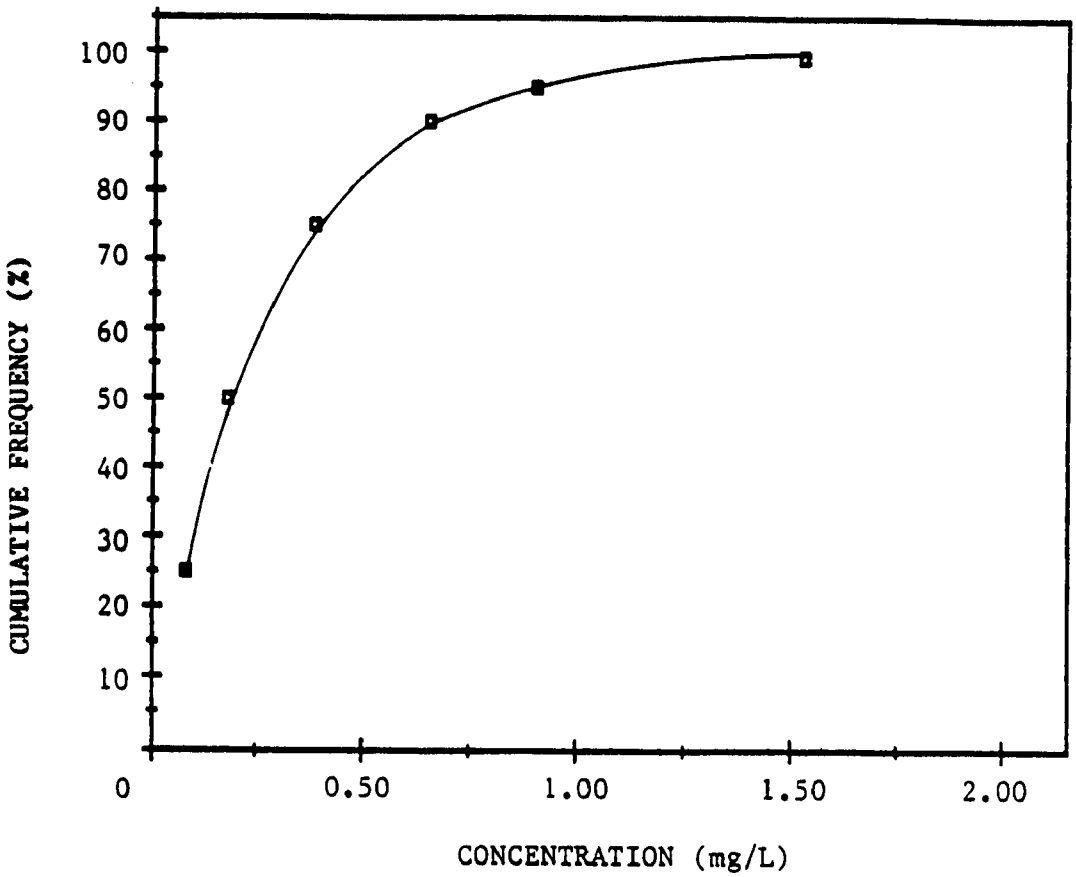

Method 350.7 -- Ammonium in Wet Deposition by Automated Colorimetric Determination with Phenate

March 1986

Performing Laboratory:

Brigita Demir
Susan R. Bachman
Carla Jo Brennan
Mark E. Peden

Illinois State Water Survey
Analytical Chemistry Unit
2204 Griffith Drive
Champaign, Illinois 61820

Sponsoring Agency:

John D. Pfaff, Project Officer

Inorganic Analysis Section
Physical and Chemical Methods Branch
United States Environmental Protection Agency
Office of Research and Development
Environmental Monitoring and Support Laboratory
Cincinnati, Ohio 45268

INDEX

Section Number	Subject
1	Scope and Application
2	Summary of Method
3	Definitions
4	Interferences
5	Safety
6	Apparatus and Equipment
7	Reagents and Consumable Materials
8	Sample Collection, Preservation, and Storage
9	Calibration and Standardization
10	Quality Control
11	Procedure
12	Calculations
13	Precision and Bias
14	References

TABLES

1. Single-Operator Precision and Bias for Ammonium Determined from Analyte Spikes of Wet Deposition Samples.
2. Single-Operator Precision and Bias for Ammonium Determined from Quality Control Check Samples.

FIGURES

1. Percentile Concentration Values Obtained from Wet Deposition Samples: Ammonium.
2. Ammonium Sampling and Analytical System -- Segmented Flow.

1. SCOPE AND APPLICATION

1.1 This method is applicable to the automated colorimetric determination of ammonium in wet deposition samples by reaction with phenate.

1.2 The term "wet deposition" is used in this method to designate rain, snow, dew, sleet, and hail.

1.3 The method detection limit (MDL) determined from replicate analyses of a calibration standard containing 0.10 mg/L ammonium is 0.03 mg/L. The concentration range of this method is 0.03-2.00 mg/L as NH_4^+.

1.4 Figure 1 represents a cumulative frequency percentile ammonium concentration plot obtained from analyses of over five thousand wet deposition samples. These data may be used as an aid in the selection of appropriate calibration standard concentrations.

2. SUMMARY OF METHOD

2.1 A sample is introduced into the automated analyzer and mixed with a complexing reagent to prevent the formation of hydroxide precipitates. This solution is then mixed with alkaline phenol and hypochlorite to form an indophenol blue complex. The blue color is intensified with the addition of sodium nitroprusside. A 50°C controlled temperature heating bath is used to increase the rate of color formation. After color development, a flowcell receives the solution for measurement of the color intensity. A light beam of the wavelength characteristic of the indophenol complex is passed through the solution. The transmitted light energy measured by a photodetector is a function of the concentration of ammonium ion in the sample. Beer's Law is used to relate the measured transmittance to concentration:

$$\log(1/T) = abc$$

where: T = transmittance
a = absorptivity
b = length of light path
c = concentration of absorbing species (mg/L)

A calibration curve is constructed using standard solutions containing known concentrations of ammonium. From this curve, the concentration of ammonium in a wet deposition sample is determined.

3. DEFINITIONS

3.1 COLORIMETRY -- the measurement of light transmitted by a colored complex as a function of concentration.

3.2 For definitions of other terms used in these methods, refer to the glossary. For an explanation of the metric system including units, symbols, and conversion factors see American Society for Testing and Materials (ASTM) Standard E 380, "Metric Practices" (14.1).

4. INTERFERENCES

4.1 Sample color absorbing in the wavelength range of 620-640 nm will increase the measured concentration of ammonium in the sample. Wet deposition samples are generally colorless, therefore, this type of interference is rare.

4.2 Elevated concentrations of ammonia in the laboratory will result in a positive interference.

5. SAFETY

5.1 The calibration standards, sample types and most reagents used in this method pose no hazard to the analyst. Use a fume hood, protective clothing, and safety glasses when handling concentrated sulfuric acid (Sect. 7.5).

5.2 Use a fume hood when preparing the alkaline phenol (Sect. 7.3). Vapors produced by this reagent are hazardous. Anytime this solution is handled, wear gloves and safety goggles and avoid all skin contact with the phenol.

5.3 Follow American Chemical Society guidelines regarding the safe handling of chemicals used in this method (14.2).

6. APPARATUS AND EQUIPMENT

6.1 AUTOMATED COLORIMETRIC INSTRUMENT -- Select and assemble an analytical system consisting of the following:

6.1.1 Sampler.

6.1.2 Proportioning Pump.

6.1.3 Analytical Cartridge.

6.1.4 Heating Bath (50°C) equipped with an 8 mL capacity glass heating coil.

6.1.5 Colorimeter with a 630 nm wavelength setting. Ensure that the colorimeter is equipped with photodetectors having maximum sensitivity at this wavelength setting. A 15 mm flow cell is adequate to achieve the MDL stated in Sect. 1.3.

6.1.6 Strip Chart Recorder (or other data acquisition device).

6.1.7 Printer (optional).

6.2 Wherever possible, use glass transmission lines with an inside diameter of 1.85 mm (0.073 inches) in the analytical cartridge and colorimeter. Glass yields a more uniform sample flow and does not degrade as quickly as other tubing materials. When connecting two glass lines, ensure that the ends are abutted. To minimize pulsing of the analytical stream, maintain uniform inside diameter throughout all transmission tubing. Minimize the length of all transmission tubing to optimize the performance of the hydraulic system.

6.3 Enclose the sampler with a dust cover to prevent contamination.

6.4 To prevent the intake of any precipitates from the reagents, install intake filters at the end of the transmission lines that are used to transport the reagents from their respective containers to the proportioning pump.

6.5 LABORATORY FACILITIES -- Laboratories used for the analysis of wet deposition samples should be free from external sources of contamination. The use of laminar flow clean air workstations is recommended for sample processing and preparation to avoid the introduction of airborne contaminants. Samples should always be capped or covered prior to analysis. A positive pressure environment within the laboratory is also recommended to minimize the introduction of external sources of contaminant gases and particulates. Windows within the laboratory should be kept closed at all times and sealed if air leaks are apparent. The use of disposable tacky floor mats at the entrance to the laboratory is helpful in reducing the particulate loading within the room.

7. REAGENTS AND CONSUMABLE MATERIALS

7.1 PURITY OF REAGENTS -- Use reagent grade chemicals for all solutions. All reagents shall conform to the specifications of the Committee on Analytical Reagents of the American Chemical Society (ACS), where such specifications are available.

7.2 PURITY OF WATER -- Use water conforming to ASTM Specification D 1193, Type II (14.3). Point of use 0.2 micrometer filters are recommended for all faucets supplying water to prevent the introduction of bacteria and/or ion exchange resins into reagents, standard solutions, and internally formulated quality control check solutions.

7.3 ALKALINE PHENOL -- Add 35 g of sodium hydroxide (NaOH) to 250 mL of water (Sect. 7.2). Stir and cool. Slowly add 85 mL of 88% (w/w) phenol solution. Dilute to 500 mL with water (Sect. 7.2) and add 0.25 mL Brij-35 or another suitable wetting agent that is free from ammonium. Refrigerate the solution at 4°C in an amber glass container for a period not exceeding one week.

CAUTION: The vapors produced by the alkaline phenol solution are hazardous. Avoid all respiratory and skin contact with this reagent. Refer to Sect. 5.2 for an explanation of necessary safety precautions.

7.4 AMMONIUM SOLUTION, STOCK (1.0 mL = 1.0 mg NH_4) -- Dissolve 2.9654 g of anhydrous ammonium chloride (NH_4Cl), dried at 105°C for one hour, in water (Sect. 7.2) and dilute to 1 L. The stock solution is stable for one year when stored at room temperature in a high density polyethylene or polypropylene container.

7.5 COMPLEXING REAGENT -- Dissolve 33 g of potassium sodium tartrate ($KNaC_4H_4O_6 \cdot 4H_2O$) and 24 g of sodium citrate ($(HOC(COONa)CH_2COONa)_2 \cdot 2H_2O$) in 950 mL of water (Sect. 7.2). Add 2.5 mL of concentrated sulfuric acid (H_2SO_4, sp gr 1.84). Dilute to 1 L with water (Sect. 7.2) and refrigerate at 4°C in a glass container.

7.6 SAMPLER RINSE WATER -- Add 0.5 mL Brij-35 or another suitable wetting agent that is free from ammonium to 1 L of water (Sect. 7.2).

7.7 SODIUM HYPOCHLORITE SOLUTION (1.75% w/v) -- Dilute 100 mL of 5.25% (w/v) sodium hypochlorite (NaOCl) solution to 300 mL with water (Sect. 7.2). Prepare this solution fresh daily and store at room temperature in a high density polyethylene or polypropylene container. Commercial bleach products containing about 5.25% (w/v) sodium hypochlorite may be used. Due to the instability of commercial bleaches, avoid storage periods longer than six months.

7.8 SODIUM NITROPRUSSIDE SOLUTION (500 mg/L) -- Dissolve 0.5 g of sodium nitroprusside ($Na_2Fe(CN)_5NO \cdot H_2O$) in water (Sect. 7.2) and dilute to 1 L. Store at room temperature away from light in an amber glass container.

7.9 SAMPLE CONTAINERS -- Use polyolefin sample cups or glass test tubes that have been rinsed thoroughly with water (Sect. 7.2) before use.

8. SAMPLE COLLECTION, PRESERVATION AND STORAGE

8.1 Collect samples in high density polyethylene (HDPE) containers that have been thoroughly rinsed with ASTM Type II water (7.2). Do not use strong mineral acids or alkaline detergent solutions for cleaning collection vessels. Residual acids may remain in the polyethylene matrix and slowly leach back into the sample. Alkaline detergents may also leave residues that may affect the sample chemistry. Cap collection bottles after cleaning to prevent contamination from airborne contaminants; air dry collection buckets in a laminar flow clean air workstation and wrap in polyethylene bags prior to use. If a laminar flow workstation is not available, pour out any residual rinse water and bag the buckets immediately. Do not dry the bucket interior by any method other than air drying in a laminar flow clean air workstation.

8.2 The frequency of sample collection and the choice of sampler design are dependent on the monitoring objectives. In general, the use of wet-only samplers is recommended to exclude dry deposition contributions, minimize sample contamination, retard evaporation, and enhance sample stability. Sample collection frequency may vary from subevent to monthly sampling periods. Collection periods of more than one week are not recommended since sample integrity may be compromised by longer exposure periods.

8.3 The presence of microbial activity will affect the stability of ammonium ion in wet deposition samples. This instability generally results in a decrease in ammonium concentration. Measurements of NH_4^+ should be made immediately after sample collection. Refrigeration of samples at 4°C will minimize but not prevent a decrease in the ammonium ion concentration.

8.3.1 Filtration of samples through a 0.45 micrometer membrane leached with water (Sect. 7.2) followed by refrigeration at 4°C is the recommended preservation technique for ammonium ion. Holding times should not exceed seven days. Monitoring of the filtration procedure is necessary to ensure that samples are not contaminated by the membrane or filtration apparatus.

9. CALIBRATION AND STANDARDIZATION

9.1 INSTRUMENT OPTIMIZATION

9.1.1 For a flow segmented system with a concentration range from 0.03-2.00 mg/L as ammonium, assemble the sampling and analytical system as shown in Figure 2.

9.1.2 Use flow rated polyvinyl chloride (PVC) or polyethylene pump and transmission tubing throughout the sampling and analytical system. Check the tubing for chemical buildup, splits, cracks, and deformations before beginning each day's analysis. Change pump tubes after 50 hours of operation. Change transmission tubing after 100 hours of operation or when uneven flow patterns are observed.

9.1.3 Optimize the tension of the pump tubes according to manufacturer's recommendations.

9.1.4 Set the heating bath to 50°C. Set the wavelength of the colorimeter to 630 nm. Allow the colorimeter and heating bath to warm up for 30 minutes while pumping sampler rinse water and reagents through the system. After a stable baseline has been obtained, adjust the recorder to maximize the full-scale response.

9.1.5 Sample at a rate of 40 samples/hour with a 1:4 sample to rinse ratio. This sampling rate provides good peak separation. Adjust the colorimeter to maximize sensitivity while minimizing instrument noise. Refer to the manufacturer's recommendations.

9.2 CALIBRATION SOLUTIONS

9.2.1 Five calibration solutions and one zero standard are needed to generate a suitable calibration curve. The lowest calibration solution should contain ammonium at a concentration greater than or equal to the method detection limit. The highest solution should approach the expected upper limit of concentration of ammonium in wet deposition. Prepare the remaining solutions such that they are evenly distributed throughout the concentration range. Suggested calibration standards for ammonium are as follows: zero, 0.03, 0.40, 0.75, 1.00, and 1.50 mg/L as NH_4^+.

9.2.2 Prepare all calibration standards by diluting the stock standard (Sect. 7.4) with water (Sect. 7.2). Use glass (Class A) or plastic pipettes that are within the bias and precision tolerances specified by the manufacturer. Standards with a concentration greater than 0.10 mg/L ammonium are stable for one week if stored at room temperature in high density polyethylene or polypropylene containers. Prepare standards with 0.10 mg/L or less ammonium every day and store at room temperature in high density polyethylene or polypropylene containers.

9.3 CALIBRATION CURVE

9.3.1 Analyze the standard containing the highest concentration of ammonium and adjust the colorimeter calibration control to obtain full-scale deflection on the recorder. Use the zero standard to set the instrument baseline. If a printer is used, adjust it to read the correct concentration. Analyze all the standards and construct a calibration curve according to Sect. 12. After every 30 samples and at the end of each day's analyses, reconstruct the entire calibration curve.

9.3.2 Verify the calibration curve after every ten samples and at the end of each day's analyses according to Sect. 10.5.

10. QUALITY CONTROL

10.1 Each laboratory using this method should develop formalized quality control protocols to continually monitor the bias and precision of all measurements. These protocols are required to ensure that the measurement system is in a state of statistical control. Estimates of bias and precision for wet deposition analyses cannot be made unless these control procedures are followed. Detailed guidelines for the development of quality assurance and quality control protocols for wet deposition measurement systems are published in a

manual available from the United States Environmental Protection Agency, Research Triangle Park, NC 27711 (14.4). Included in this manual are procedures for the development of statistical control charts for use in monitoring bias and precision as well as recommendations for the introduction of reagent blanks, laboratory duplicates, field duplicates, spike samples, and performance evaluation samples. These guidelines are to be used by all laboratories involved with wet deposition measurements.

10.2 ESTABLISHMENT OF WARNING AND CONTROL LIMITS -- Warning and control limits are used to monitor drift in the calibration curve, analyses of quality control check samples (QCS), and measured recoveries from laboratory spikes.

10.2.1 Calibration Curve -- After a calibration curve has been constructed according to Sect. 12, reanalyze additional aliquots of the low and high concentration standards. Calculate the concentrations using the previously derived calibration curve. Repeat this procedure until at least ten determinations at each concentration level have been made. These data should be collected on ten different days to provide a realistic estimate of the method variability. Calculate a standard deviation (s) at each concentration level. Use the nominal standard concentration as the mean value ($\bar{x}$) for determining the control limits. A warning limit of $\bar{x} \pm 2s$ and a control limit of $\bar{x} \pm 3s$ should be used. Reestablish these limits whenever instrumental operating conditions change.

10.2.2 Quality Control Check Samples (QCS) -- Calculate warning and control limits for QCS solutions from a minimum of ten analyses performed on ten days. Use the calculated standard deviation (s) at each QCS concentration level to develop the limits as described in Sect. 10.2.1. Use the certified or NBS traceable concentration as the mean (target) value. Constant positive or negative measurements with respect to the true value are indicative of a method or procedural bias. Utilize the data obtained from QCS measurements as in Sect. 10.4 to determine when the measurement system is out of statistical control. The standard deviations used to generate the QCS control limits should be comparable to the single operator precision reported in Table 2. Reestablish new warning and control limits whenever instrumental operating conditions are varied or QCS concentrations are changed.

10.2.3 Laboratory Spike Solutions -- A minimum of ten analyte spikes of wet deposition samples is required to develop a preliminary data base for the calculation of warning and control limits for spike recovery data. Select the spike concentration such that the working range of the method will not be exceeded. Samples selected for the initial spike recovery study should represent the concentration range common to wet deposition samples in order to reliably

estimate the method accuracy. Calculate a mean and standard deviation of the percent recovery data using the formulas provided in the glossary. Determine warning and control limits using ±2s and ±3s, respectively. If the data indicate that no significant method bias exists (14.5), the 100 percent recovery is used as the mean percent recovery. Where a significant bias is determined at the 95% confidence level, the control limits are centered around the bias estimate. Routine spiked sample analyses that yield percent recovery data outside of the control limits are an indication of matrix interferences that should be resolved before routine analyses are continued.

10.2.4 All warning and control limits should be reevaluated on a continual basis as additional data are collected during routine analyses. The limits should be broadened or narrowed if a recalculated standard deviation under similar operating conditions provides a different estimate of the procedure variability.

10.3 Monitor the cleaning procedure by pouring a volume of water (Sect. 7.2) that approximates the median sample size into the collection vessel. Allow the water to remain in the sealed or capped collection container for at least 24 hours and determine the ammonium concentration. If the solution concentration exceeds the MDL, a contamination problem is indicated in the cleaning procedure. Take corrective action before the sampling containers are used for the collection of wet deposition.

10.4 Analyze a quality control check sample (QCS) after the calibration curve has been established. This sample may be formulated in the laboratory or obtained from the National Bureau of Standards (NBS Standard Reference Material 2694, Simulated Rainwater). Verify the accuracy of internally formulated QCS solutions with an NBS traceable standard before acceptance as a quality control check. The check sample(s) selected must be within the range of the calibration standards. If the measured value for the QCS falls outside of the ±3s limits (Sect. 10.2.2), or if two successive QCS checks are outside of the ±2s limits, a problem is indicated with the system or the calibration procedure. Corrective action should be initiated to bring the results of the QCS within the established control limits. Plot the data obtained from the QCS checks on a control chart for routine assessments of bias and precision.

10.5 Verify the calibration curve after a maximum of ten samples and at the end of each day's analyses. Analyze calibration standards at the low and high ends of the working range. If the routine calibration checks do not meet the criteria described in Sect. 10.4, recalibrate the system and reanalyze all samples from the last time the system was in control. Verify the new calibration curve with the QCS according to Sect. 10.4 and reanalyze all samples measured since the last time the system was in control.

10.6 Submit a Field Blank (FB) to the laboratory for every 20 samples. The FB may consist of a water sample (Sect. 7.2) or a known reference solution that approximates the concentration levels characteristic of wet deposition. The FB is poured into the sampling vessel at the field site and undergoes identical processing and analytical protocols as the wet deposition sample(s). Use the analytical data obtained from the FB to determine any contamination introduced in the field and laboratory handling procedures. The data from the known reference solution can be used to calculate a system precision and bias.

10.7 Prepare and analyze a laboratory spike of a wet deposition sample according to the guidelines provided in "Quality Assurance Manual for Precipitation Measurement Systems" (14.4). Compare the results obtained from spiked samples to those obtained from identical samples to which no spikes were added. Use these data to monitor the method percent recovery as described in Sect. 10.2.3.

10.8 Participation in performance evaluation studies is recommended for wet deposition chemistry laboratories. The samples used for these performance audits should contain the analytes of interest at concentrations within the normal working range of the method. The true values are unknown to the analyst. Performance evaluation studies for wet deposition chemistry laboratories are conducted semiannually by the USEPA Performance Evaluation Branch, Quality Assurance Division, Research Triangle Park, NC 27711.

11. PROCEDURE

11.1 Optimize the instrument each day according to Sect. 9.1.

11.2 Prepare all standards and construct a calibration curve according to Sect. 9.2 and 9.3.

11.3 After the calibration curve is established, analyze the QCS. If the measured value for the QCS is not within the specified limits (Sect. 10.2.2), refer to Sect. 10.4.

11.4 Load the sampler tray and begin analysis.

11.5 If the peak height response exceeds the working range of the system, dilute the sample with zero standard and reanalyze.

11.6 When analysis is complete, turn off the heating bath and rinse the system with sampler rinse water (Sect. 7.6) for 15 minutes.

12. CALCULATIONS

12.1 Calculate a linear least squares fit of the standard concentration as a function of the measured peak height. The linear least squares equation is expressed as follows:

$$y = B_0 + B_1 x$$

where: y = standard concentration in mg/L
x = peak height measured
B_0 = y-intercept calculated from: $\bar{y} - B_1\bar{x}$
B_1 = slope calculated from:

$$\sum_{i=1}^{n} (x_i - \bar{x})(y_i - \bar{y}) / \sum_{i=1}^{n} (x_i - \bar{x})^2$$

where: $\bar{x}$ = mean of peak heights measured
$\bar{y}$ = mean of standard concentrations
n = number of samples

The correlation coefficient should be 0.9990 or greater. Determine the concentration of ammonium from the calibration curve.

12.2 If the relationship between standard concentration and measured peak height is nonlinear, use a second degree polynomial least squares equation to derive a curve with a correlation $\geq$0.9990. The second degree polynomial equation is expressed as follows:

$$y = B_2 x^2 + B_1 x + B_0$$

A computer is necessary for the derivation of this function. Determine the concentration of ammonium from the calibration curve.

12.3 An integration system may also be used to provide a direct readout of the concentration of ammonium.

12.4 Report data in mg/L as NH_4^+. Do not report data lower than the lowest calibration standard.

13. PRECISION AND BIAS

13.1 The mean percent recovery and mean bias of this method were determined from the analysis of spiked wet deposition samples according to ASTM Standard Practice D4210, Annex A4 (14.5). The results are summarized in Table 1. No statistically significant biases were found.

13.2 Single-operator precision and bias were obtained from the analysis of quality control check samples that approximated the levels common to wet deposition samples. These results reflect the accuracy that can be expected when the method is used by a competent operator. These data are presented in Table 2.

14. REFERENCES

14.1 Annual Book of ASTM Standards, Part 31, "Excerpts from Standard for Metric Practice," Standard E 380-79, 1982, pp. 679-694.

14.2 "Safety in Academic Chemistry Laboratories," American Chemical Society Publication, Committee on Chemical Safety, 3rd Edition, 1979.

14.3 Annual Book of ASTM Standards, Part 31, "Standard Specification for Reagent Water," Standard D 1193-77, 1982, p. 39.

14.4 Topol, L. E., Lev-On, M., Flanagan, J., Schwall, R. J., Jackson, A. E., Quality Assurance Manual for Precipitation Measurement Systems, 1985, U.S. Environmental Protection Agency, Environmental Monitoring Systems Laboratory, Research Triangle Park, NC 27711.

14.5 Annual Book of ASTM Standards, Section 11, **Vol. 11.01 (1)**, "Practice for Intralaboratory Quality Control Procedures and a Discussion of Reporting Low-Level Data," Standard D4210 Annex A4, 1983, pp. 15-16.

Table 1. Single-Operator Precision and Bias for Ammonium Determined from Analyte Spikes of Wet Deposition Samples.

Analyte	Amount Added, mg/L	n[a]	Mean Percent Recovery	Mean Bias, mg/L	Standard Deviation, mg/L	Statistically Significant Bias?[b]
Ammonium	0.17	8	100.0	-0.01	0.01	No
	0.74	10	103.4	0.02	0.03	No

a. Number of replicates
b. 95% Confidence Level

Table 2. Single-Operator Bias and Precision for Ammonium Determined from Quality Control Check Samples.

Theoretical Concentration, mg/L	Measured Concentration, mg/L	n[a]	Bias, mg/L	Bias, %	Precision, s, mg/L	Precision, RSD, %
0.19	0.18	215	-0.01	-5.3	0.02	11.1
0.36	0.36	82	0.00	0.0	0.02	5.6
0.98	0.92	224	-0.06	-6.1	0.05	5.4
1.22	1.24	81	0.02	1.6	0.03	2.4

The above data were obtained from records of measurements made under the direction of the NADP/NTN quality assurance program.

a. Number of replicates

Figure 1. Percentile Concentration Values Obtained from Wet Deposition Samples: Ammonium

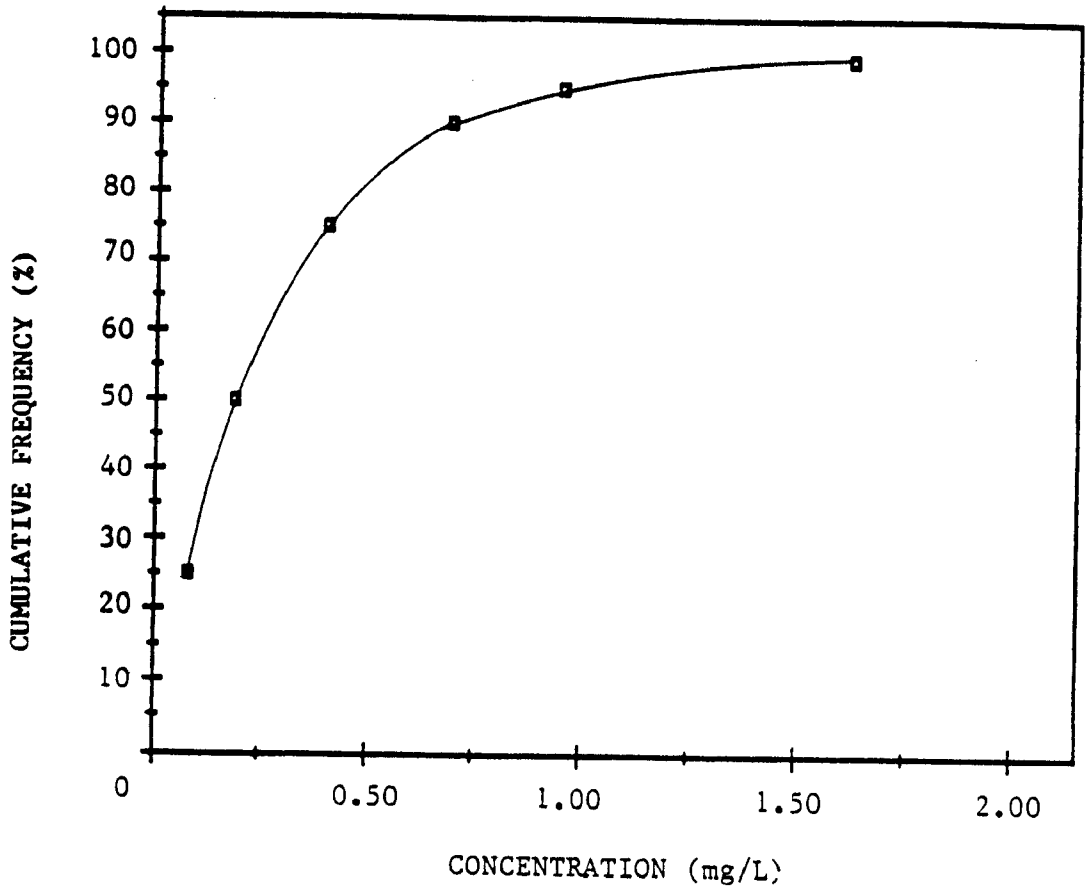

Figure 2. Ammonium Sampling and Analytical System -- Segmented Flow.

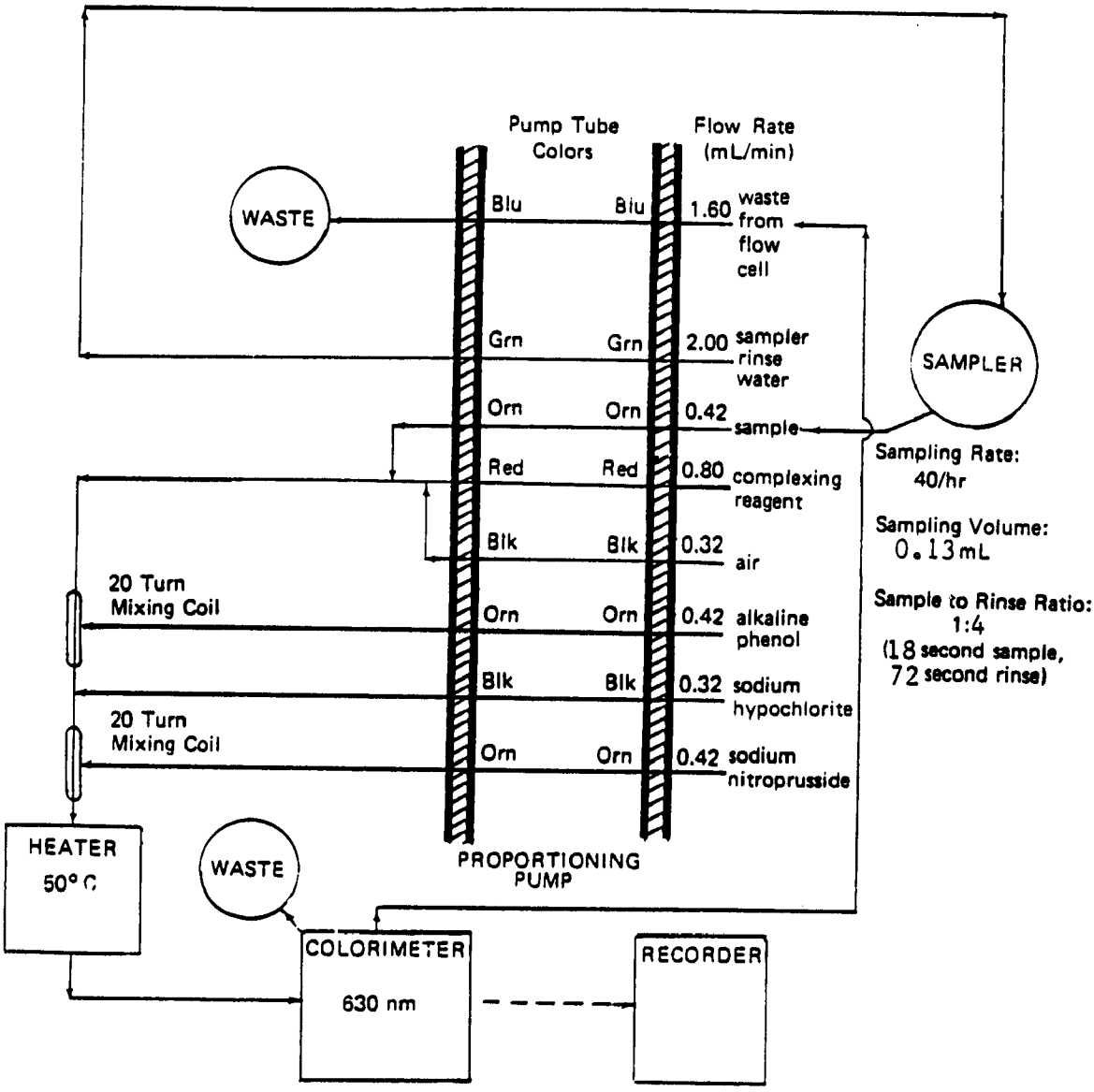

Appendix M

METHOD 200.6 -- DISSOLVED CALCIUM, MAGNESIUM, POTASSIUM, AND SODIUM IN WET DEPOSITION BY FLAME ATOMIC ABSORPTION SPECTROPHOTOMETRY

Method 200.6 -- Dissolved Calcium, Magnesium, Potassium, and Sodium in Wet Deposition by Flame Atomic Absorption Spectrophotometry

March 1986

Performing Laboratory:

Loretta M. Skowron
Carla Jo Brennan
Mark E. Peden

Illinois State Water Survey
Analytical Chemistry Unit
2204 Griffith Drive
Champaign, Illinois 61820

Sponsoring Agency:

John D. Pfaff, Project Officer

Inorganic Analysis Section
Physical and Chemical Methods Branch
United States Environmental Protection Agency
Office of Research and Development
Environmental Monitoring and Support Laboratory
Cincinnati, Ohio 45268

INDEX

Section Number	Subject
1	Scope and Application
2	Summary of Method
3	Definitions
4	Interferences
5	Safety
6	Apparatus and Equipment
7	Reagents and Consumable Materials
8	Sample Collection, Preservation, and Storage
9	Calibration and Standardization
10	Quality Control
11	Procedure
12	Calculations
13	Precision and Bias
14	References

TABLES

1. Method Detection Limits and Concentration Ranges for Flame Atomic Absorption Spectrophotometric Analysis of Wet Deposition.
2. Operating Conditions and Suggested Calibration Standard Concentrations for the Determination of Calcium, Magnesium, Potassium, and Sodium in Wet Deposition Samples.
3. Single-Operator Precision and Bias for Calcium, Magnesium, Potassium, and Sodium.Determined from Analyte Spikes of Wet Deposition Samples.
4. Single-Operator Precision and Bias for Calcium, Magnesium, Potassium, and Sodium Determined from Quality Control Check Samples.

FIGURES

1. Percentile Concentration Values Obtained from Wet Deposition Samples: Calcium, Magnesium, Potassium, and Sodium.

7. REAGENTS AND CONSUMABLE MATERIALS

7.1 PURITY OF REAGENTS -- Use chemicals of reagent grade or better for all solutions. All reagents shall conform to the specifications of the Committee on Analytical Reagents of the American Chemical Society (ACS) where such specifications are available.

7.2 PURITY OF WATER -- Use water conforming to ASTM Specification D 1193, Type II (14.9).

7.3 ARGON -- Use standard, welder's grade compressed argon. A line filter or trap is recommended to ensure particle and moisture free gas. Nitrogen is not recommended because of its tendency to form stable nitrides with aluminum at high temperatures.

7.4 HYDROCHLORIC ACID -- Use concentrated hydrochloric acid (HCl, sp gr 1.19) that meets specification for trace metal analysis (<0.05 mg/L Al, <0.02 mg/L Fe, and <0.005 mg/L Cd, Cu, Pb, Mn, and Zn).

7.5 HYDROCHLORIC ACID (6.0 N) -- Add 1 volume of concentrated hydrochloric acid (HCl, sp gr 1.19) to an equal volume of water (Sect. 7.2).

7.6 NITRIC ACID -- Use concentrated nitric acid (HNO_3, sp gr 1.43) that meets specification for trace metal analysis (Sect. 7.4).

7.7 NITRIC ACID (8.0 N) -- Add 1 volume of concentrated nitric acid (HNO_3, sp gr 1.43) to an equal volume of water (Sect. 7.2).

7.8 NITRIC ACID (3.2 N) -- Add 1 volume of concentrated nitric acid (HNO_3, sp gr 1.43) to 4 volumes of water (Sect. 7.2).

7.9 STOCK STANDARD SOLUTIONS -- Stock standard solutions may be purchased as certified solutions or prepared from ACS reagent grade materials as detailed below. Store the solutions at room temperature in polyethylene containers.

7.9.1 Aluminum Solution, Stock (1.0 mL = 1.0 mg Al) -- Dissolve 1.000 g of pure aluminum wire in 50 mL of concentrated HCl (Sect. 7.4) over low heat. Cool and dilute to 1 L with water (Sect. 7.2).

7.9.2 Cadmium Solution, Stock (1.0 mL = 1.0 mg Cd) -- Dissolve 1.000 g of pure metallic cadmium in 50 mL of 6.0 N HCl (Sect. 7.5) and dilute to 1 L with water (Sect. 7.2).

7.9.3 Copper Solution, Stock (1.0 mL = 1.0 mg Cu) -- Dissolve 1.000 g of electrolytic copper in 50 mL of 8.0 N HNO_3 (Sect. 7.7) and dilute to 1 L with water (Sect. 7.2).

7.9.4 Iron Solution, Stock (1.0 mL = 1.0 mg Fe) -- Dissolve 1.000 g of pure metallic iron in 50 mL of 6.0 N HCl

(Sect. 7.5) and dilute to 1 L with water (Sect. 7.2).

7.9.5 Lead Solution, Stock (1.0 mL = 1.0 mg Pb) -- Dissolve 1.000 g of pure metallic lead or 1.598 g of lead nitrite ($Pb(NO_3)_2$) in 50 mL of 8.0 N HNO_3 (Sect. 7.7) and dilute to 1 L with water (Sect. 7.2).

7.9.6 Manganese Solution, Stock (1.0 mL = 1.0 mg Mn) -- Dissolve 1.000 g of pure metallic manganese in 50 mL of 8.0 N HNO_3 (Sect. 7.7) and dilute to 1 L with water (Sect. 7.2).

7.9.7 Zinc Solution, Stock (1.0 mL = 1.0 mg Zn) -- Dissolve 1.000 g of pure metallic zinc in 50 mL of 6.0 N HCl (Sect. 7.5) and dilute to 1 L with water (Sect. 7.2).

7.10 GRAPHITE FURNACE TUBES

7.10.1 Pyrolytically coated graphite tubes will improve sensitivity, reduce memory effects, and decrease carbide formation by reducing sample penetration into the tube wall.

Note: The samples are acidic (Sect. 8.4) and will degrade the coating and rapidly decrease the signal to noise ratio.

7.10.2 Platforms or graphite tubes with walls thicker in the center are recommended as a method of decreasing interferences (Sect. 4.1.1.1) (14.4).

7.11 BOTTLES FOR SAMPLES AND STANDARDS -- Use polyethlene containers.

7.11.1 Rinse thoroughly with water (Sect. 7.2).

7.11.2 Fill with 3.2 N HNO_3 (Sect. 7.8) and leach for 48 hours.

7.11.3 Discard leachate and rinse thoroughly with water (Sect. 7.2).

7.11.4 Refill with water (Sect. 7.2) and leach for 24 hours.

7.11.5 Discard leachate and rinse thoroughly with water (Sect. 7.2).

7.11.6 Refill with water (Sect. 7.2) and store.

7.11.7 Rinse thoroughly with water (Sect. 7.2) before use.

7.12 SAMPLE CONTAINERS -- Use disposable polystyrene sample cups that have been thoroughly rinsed with water (Sect. 7.2) before use. Do not reuse.

7.12.1. Check sample cups for contamination. If contamination is a problem, clean the sample cups as directed in Sect. 7.11.

8. SAMPLE COLLECTION, PRESERVATION, AND STORAGE

8.1 Collect samples in a funnel connected to a sample bottle. All components should be constructed of polyethylene (14.10) or fluorohydrocarbon plastic. Clean according to Section 7.11 (14.11). Cap collection bottles after cleaning. Air dry funnels and tubing in a laminar flow clean air work station and store in new polyethylene bags.

8.1.1. Evaluate the cleaning procedure according to Section 10.3. and check for desorption and/or adsorption of trace metals (14.10).

8.2 The use of wet-only samplers is recommended to exclude dry deposition contributions, minimize sample contamination, retard evaporation, and enhance sample stability. Sample collection frequency may vary from subevent to event sampling periods. Collection periods of more than one day are not recommended since sample integrity may be compromised by longer exposure periods.

8.3 Immediately after collection, filter the samples through a 0.4um polycarbonate membrane which has been leached with 300 mL of water (Sect. 7.2). A polysulfone filtration apparatus is recommended. Do not use glass. Monitoring of the filtration procedure is necessary to ensure that metals are neither adsorbed nor desorbed on the membrane or filtration apparatus.

8.4 Immediately after filtration, acidify the filtrate to pH 1.8 (1.0 mL = 1 uL HNO_3 (Sect. 7.6)). This will stabilize and preserve the metals in solution. Filtered and acidified samples are stable for up to six months.

9. CALIBRATION AND STANDARDIZATION

9.1 CALIBRATION SOLUTIONS

9.1.1 Five calibration standards and one zero standard are required. The lowest calibration standard should contain the analyte of interest at a concentration of one to five times the method detection limit. The highest standard concentration is determined by curve linearity, sensitivity, and expected analyte concentrations. The remaining standards are uniformly distributed between the low and high standards. Suggested calibration standard concentrations are listed in Table 3.

9.1.2 Prepare calibration standards by diluting stock standards with water (Sect. 7.2). Acidify the solution to pH 1.8 (1.0 mL = 1uL HNO_3 (Sect. 7.6)) for Cd, Cu, Fe, Pb, Mn, and Zn. Acidify aluminum standards to pH 1.1 (1.0 mL = 5 uL HNO_3 (Sect. 7.6)). Use plastic tipped pipettes that are within the precision and tolerances specified in Sect. 6.3.1.

9.1.3 The calibration standards for Al, Cu, Fe, Mn, and Pb are stable for six months if stored at room temperature in nitric acid leached (Sect. 7.11) high density polyethylene (HDPE) bottles. Standards for Cd and Zn are stable for three months.

NOTE: If bottles are used that are made of a plastic other than HDPE, the cleaning procedure must be evaluated according to Sect. 10.2.1 and 10.3.

9.2 CALIBRATION

9.2.1 A calibration curve must be constructed every day. If the instrument is turned off or if there is an interruption in the heating cycle, verify the calibration curve.

9.2.2 Clean any residue from the graphite tube by heating to atomization temperature until there is no absorbance signal. Analyze the zero standard and check for peaks in the atomization stage. If a peak is apparent, analyze another zero standard. An atomization peak indicates a memory effect (Sect. 4.2), zero standard contamination, or contamination in the furnace components. Refer to Appendix A for corrective action. When atomization of the zero standard results in no absorbance peaks, continue.

9.2.3 Analyze the calibration standards and record their absorbances. Duplicates of each standard should agree within $\leq$ 5% RSD for Cd, Cu, Fe, Mn, and Zn and $\leq$ 10% RSD for Al and Pb.

NOTE: The lowest calibration standard will usually have higher RSD's. Duplicate agreements of $\leq$ 15% are acceptable for the lowest standards, since they are at the MDL.

9.2.4 Construct calibration curves for each analyte according to Sect. 12.

10. QUALITY CONTROL

10.1 Each laboratory using this method should develop formalized quality control protocols to continually monitor the bias and precision of all measurements. These protocols are required to ensure that the measurement system is in a state of statistical control. Estimates of bias and precision for wet deposition analyses cannot be made unless these control procedures are followed. Detailed guidelines for the development of quality assurance and quality control protocols for precipitation measurement systems are published in a manual available from the United States Environmental Protection Agency, Research Triangle Park, NC 27711 (14.12). Included in this manual are procedures for the development of statistical control charts for use in monitoring bias and precision as well as recommendations for the introduction of reagent blanks, laboratory duplicates, field duplicates, spike samples, and performance evaluation samples. These guidelines are to be used by all laboratories involved with wet deposition measurements.

10.2 ESTABLISHMENT OF WARNING AND CONTROL LIMITS -- Warning and control limits are used to monitor drift in the calibration curve, analyses of quality control check samples (QCS), and measured recoveries from laboratory spikes.

10.2.1 Calibration Curve -- After a calibration curve has been constructed according to Sect. 12, reanalyze additional aliquots of all the standards. Calculate the concentrations using the previously derived calibration curve. Repeat this procedure until at least ten determinations at each concentration level have been made. These data should be collected on ten different days to provide a realistic estimate of the method variability. Calculate a standard deviation (s) at each concentration level. Use the nominal standard concentration as the mean value (x) for determining the control limits. A warning limit of $x \pm 2s$ and a control limit of $x \pm 3s$ should be used. Reestablish these limits whenever instrumental operating conditions change.

10.2.2 Quality Control Check Samples (QCS) -- Calculate warning and control limits for QCS solutions from a minimum of ten analyses performed on ten days. Use the calculated standard deviation (s) at each QCS concentration level to develop the limits as described in Sect. 10.2.1. Use the certified concentration as the mean (target) value. Constant positive or negative measurements with respect to the true value are indicative of a method or procedural bias. Utilize the data obtained from QCS measurements as in Sect. 10.5 to determine when the measurement system is out of statistical control. The standard deviations used to generate the QCS control limits should be comparable to

the single operator precision reported in Table 4. Reestablish new warning and control limits whenever instrumental operating conditions are varied or QCS concentrations are changed.

10.2.3 Laboratory Spike Solutions -- A minimum of ten analyte spikes of wet deposition samples is required to develop a preliminary data base for the calculation of warning and control limits for spike recovery data. Select the spike concentration such that the working range of the method will not be exceeded. Samples selected for the initial spike recovery study should represent the concentration range common to wet deposition samples in order to reliably estimate the method accuracy. Calculate a mean and standard deviation of the percent recovery data using the formulas provided in the glossary. Determine warning and control limits using $\pm 2s$ and $\pm 3s$, respectively. If the data indicate that no significant method bias exists (14.13), the 100 percent recovery is used as the mean percent recovery. Where a significant bias is determined at the 95% confidence level, the control limits are centered around the bias estimate. Routine spiked sample analyses that yield percent recovery data outside of the control limits are an indication of matrix interferences that should be resolved before routine analyses are continued.

10.2.4 All warning and control limits should be reevaluated on a continual basis as additional data are collected during routine analyses. The limits should be broadened or narrowed if a recalculated standard deviation under similar operating conditions provides a different estimate of the procedure variability.

10.3 Monitor the cleaning procedure by pouring a volume of water (Sect. 7.2) that approximates the median sample size into the collection vessel. Allow the water to remain in the sealed or capped collection container for at least 24 hours and determine the concentration of the analytes of interest. If any of the measured concentrations exceed the MDL, a contamination problem is indicated in the cleaning procedure. Take corrective action before the sampling containers are used for the collection of wet deposition.

10.4 Keep daily records of calibration data and the instrument operating parameters. Use these historical data as general performance indicators. Gross changes in sensitivity, curve linearity, or photomultiplier tube voltage are indicative of a problem. Possibilities include instrument malfunction, defective graphite tube, arcing in the furnace, improper optimization, faulty hollow cathode lamp, contamination, and inaccurate standard solutions.

10.5 Analyze a quality control check sample (QCS) after a calibration curve has been established. This sample may be formulated in the laboratory or obtained from the U.S. Environmental Protection Agency (USEPA), Environmental Monitoring and Support Laboratory in Cincinnati,Ohio. The check sample selected must be within the range of the calibration standards, and it must be prepared at the same acid concentration. Prepare according to Sect. 11.6. If the measured value for the QCS falls outside of the $\pm 3s$ limits (Sect. 10.2.2), or if two successive QCS checks are outside of the $\pm 2s$ limits, a problem is indicated with the spectrophotometer or calibration curve. Reestablish the baseline with the zero standard and/or recalibrate. If the QCS analysis is still beyond control limits, inaccurate working standards might be the problem. Prepare new standards. Plot the data obtained from the QCS checks on a control chart for routine assessments of bias and precision.

10.6 Reestablish the baseline with the zero standard after every ten samples. Verify the calibration curve after a maximum of twenty samples and at the end of each day's analyses by analyzing calibration standards at the low and high ends of the working range. If the routine calibration checks do not meet the criteria described in Sect. 10.2.1, recalibrate the system and reanalyze all samples from the last time the system was in control. Verify the new calibration curve with the QCS according to Sect. 10.5 and reanalyze all samples from the last time the measurement system was in control.

10.7 Submit a Field Blank (FB) to the laboratory for every 20 samples. The FB may consist of a water sample (Sect. 7.2) or a known reference solution that approximates the concentration levels characteristic of wet deposition. The FB is poured into the sampling vessel at the field site and undergoes identical processing and analytical protocols as the wet deposition sample(s). Use the analytical data obtained from the FB to determine any contamination introduced in the field and laboratory handling procedures. The data from the known reference solution can be used to calculate a system precision and bias.

10.8 Prepare and analyze a laboratory spike of a wet deposition sample according to the guidelines provided in "Quality Assurance Manual for Precipitation Measurement Systems" (14.12). Compare the results obtained from the spiked samples to those obtained from identical samples to which no spikes were added. Use these data to monitor the method percent recovery as described in Sect. 10.2.3.

10.9 Participation in performance evaluation studies is recommended for precipitation chemistry laboratories. The samples used for these performance audits should contain the analytes of interest at concentrations within the normal working range of the method. The true values are unknown to the analyst. Performance evaluation studies for precipitation chemistry laboratories are conducted semiannually by the USEPA Performance Evaluation Branch, Quality Assurance Division, Research Triangle Park, NC 27711.

10.10 INSTRUMENT MAINTENANCE -- Strictly adhere to manufacturer's maintenance schedule.

10.10.1 Exposed optical mirrors should be replaced yearly to maintain optimal sensitivity and precision.

10.10.2 Clean all exposed lenses weekly. Use methanol and lint-free laboratory wipes.

10.10.3 Each time the graphite tube is changed, thoroughly clean the furnace parts and electrodes with methanol. Check all parts for wear and replace if necessary.

11. PROCEDURE

11.1 SET AAS PARAMETERS

11.1.1 Lamp Current -- Refer to manufacturer's guidelines for optimization of this parameter. The use of excessively high currents will shorten lamp life. High currents also cause line broadening, resulting in a reduction in sensitivity and calibration curve linearity. The use of currents that are too low will cause lamp instability and insufficient throughput of energy through the instrument's optical system. The result is increased signal noise due to excess electrical gain applied to the photodetector.

11.1.2 Light Beam -- Focus the light beam in the center of the graphite tube according to the manufacturer's guidelines. Rotate the lamp within its holder for maximum energy output readings.

11.1.3 Furnace Alignment -- Position the atomizer cell so that the light beam passes through the center of the graphite furnace allowing optimum light transmission.

11.1.4 Wavelength -- Set the wavelength according to Table 2 following manufacturer's guidelines.

11.1.5 Spectral Bandwidth -- Select the appropriate bandwidth according to Table 2.

11.2 When a new graphite tube is installed, condition and clean the tube by the following procedure:

11.2.1 Dry stage -- 500°C for 15 sec.

11.2.2 Pyrolyze stage -- 1500°C for 10 sec.

11.2.3 Atomize stage -- 2500°C for 10 sec.

11.3 SET FURNACE PARAMETERS

11.3.1 Gas Settings -- Follow manufacturer's guidelines.

11.3.2 Cooling Water -- Follow manufacturer's guidelines for water flow. Tap water may be used if filtered to remove particulates.

11.3.3 Set furnace parameters according to manufacturer's guidelines or those presented in Table 2.

11.3.4 Adjustments to the settings in Sect. 11.3.3 will be necessary in order to establish optimal furnace settings specific to the instrument in use. Use a strip chart recorder or video graphics to monitor drying, pyrolyzation, and atomization.

11.3.4.1 Inject the highest concentration calibration standard into the furnace and initiate the dry cycle. Refer to Table 2 for guidelines in selecting appropriate sample volume. The sample will block the light path (shown with an absorbance increase). The solvent should evaporate slowly and evenly with no sputtering, so that the signal decreases steadily to the baseline before entering the pyrolyzation stage (Fig. 1).

11.3.4.2 Adjust the pyrolyzation stage temperature so that it is high enough and long enough to decompose and volatilize the matrix components without losing any of the analyte. The nonatomic absorption signals should return to the baseline before the atomization stage begins (Fig. 2).

NOTE: The nitric acid in the matrix (Sect 8.4) may cause nonatomic absorption signals in the pyrolyze stage.

11.3.4.3 Adjust the atomization stage temperature so that it is high enough to volatilize all of the analyte. The use of too high a temperature will result in premature deterioration of the graphite tube, black body emission, and/or poor precision. The absorbance signal should be returning to baseline before the end of the atomization stage (Fig. 2).

NOTE: To determine whether all of the analyte has been atomized, analyze a zero standard. If there is an atomic absorption signal during atomization, the atomization temperature is too low (Fig. 3). Adjust accordingly.

11.3.4.4 Analyze the standard at the final settings.

11.3.4.5 Repeat the steps in Sect. 11.3.4.1-4, if necessary, making the necessary temperature and time adjustments to achieve optimal atomization.

11.3.4.6 Turn on the background corrector, and adjust according to manufacturer's guidelines. Analyze the same calibration standard at the settings determined in Sect. 11.3.4.1-5.

11.3.4.7 Compare the traces of Sect. 11.3.4.5 and 11.3.4.6. The background correction trace should have no peaks in the pyrolyzation stage. The peaks in the atomization stage should be similar on the two traces. If the settings are correct, almost all of the nonatomic absorption will be in the pyrolyzation stage and all of the atomic absorption will be in the atomization stage (Fig. 4).

11.3.4.8 If premature analyte vaporization is apparent on the background corrected trace, readjust the temperature settings. If any adjustments are made, repeat steps 11.3.4.1-7. Continue until the conditions in Sect. 11.3.4.7 are met.

11.3.4.9 Record the final settings for each analyte. Once the settings are established, they can be used routinely in the analysis of wet deposition.

11.3.4.10 Typical atomization profiles for each metal are shown in Fig. 5. Typical absorbances for the sample volumes reccomended are listed in Table 6.

11.4 Calibrate according to Section 9.2.

11.5 Verify the calibration curve according to Section 10.5.

11.6 For aluminum determinations, increase the nitric acid concentration of the sample (Sect. 4.1.1.3). Pour the sample into the sample cup containing the acid.

11.7 Analyze duplicates of all samples. The duplicates must agree within $\leq$ 10% RSD. The reported value is the mean of the duplicates. If precision is poor, refer to Appendix A.

11.8 If the absorbance (or concentration) for a given sample exceeds the calibration range, dilute a separate sample with the zero standard.

11.9 When analysis is complete, follow the manufacture's instructions for instrument shut-down.

12. CALCULATIONS

12.1 For each analyte of interest, calculate a linear least squares fit of the standard concentration as a function of the measured absorbance. The linear least squares equation is expressed as follows:

$$y = B_0 + B_1 x$$

where: y = standard concentration in ug/L
x = absorbance measured
B_0 = y-intercept calculated from: $y - B_1 x$
B_1 = slope calculated from:

$$\sum_{i=1}^{n} (x_i - x)(y_i - y) / \sum_{i=1}^{n} (x_i - x)^2$$

where: x = mean of absorbances measured
y = mean of standard concentrations
n = number of samples

The correlation coefficient should be 0.9990 or greater. Determine the concentration of the analyte of interest from the calibration curve.

12.2 If the relationship between concentration and absorbance is nonlinear, use a second degree polynomial least squares equation to derive a curve with a correlation $\geq$0.9990. The second degree polynomial equation is expressed as follows:

$$y = B_2 x^2 + B_1 x + B_0$$

Determine the concentration of analyte of interest from the calibration curve.

12.3 An integration system or internal calibration software may be used to provide a direct readout of the concentration of the analyte of interest.

12.4 Report concentrations in ug/L. Do not report data lower than the lowest calibration standard.

13. PRECISION AND BIAS

13.1 The percent recovery and mean bias of this method were determined from the analysis of spiked wet deposition samples according to ASTM Standard Practice D4210, Annex A4 (14.13). The results are summarized in Table 5.

13.2 Single-operator precision and bias were obtained from the analysis of quality control check samples that approximated the levels common to wet deposition samples. These results reflect the accuracy that can be expected when the method is used by a competent operator. These data are presented in Table 4.

14. REFERENCES

14.1 Annual Book of ASTM Standards, Part 42, "Standard Definitions of Terms and Symbols Relating to Molecular Spectroscopy," Standard E 131-81, 1981, p. 66.

14.2 Annual Book of ASTM Standards, Section 11, Vol. 11.01 (1), "Excerpts from Standard for Metric Practice," Standard E 380-79, 1983, pp. 679-694.

14.3 Sotera, J.J., Bancraft, M.F., Smith, S.B.,Jr., and Corum, T.L., Atomic Absorption Methods Manual, Vol. 2 "Flameless Operations", Instrumentation Laboratory, Inc, Wilmington, Massachusetts, 1981, pp. 2-22, 23.

14.4 Murphy, L.C., Almeida, M.C., Dulude, G.R., and Sotera, J.J., "Minimizing Matrix Interferences in Furnace Atomic Absorption Spectrometry," Spectroscopy, 1986, Vol. 1 (3), pp. 39-43.

14.5 Friedman, L.C. and Erdmann, D.E. "Quality Assurance Practices for the Chemical and Biological Analyses of Water and Fluvial Sediments", Techniques of Water-Resources Investigations of the United States Geological Survey, Book 5, Chapter A6, 1982, p. 31.

14.6 Prudent Practices for Disposal of Chemicals from Laboratories, National Research Council, Committee on Hazardous Substances in the Laboratory, Commission of Physical Sciences, Mathematics and Resources. National Academy Press, Washington D,C, 1983.

14.7 "Safety in Academic Chemistry Laboratories", American Chemical Society Publication, Committee on chemical Safety, 4th Edition, 1985.

14.8 Annual Book of ASTM Standards, Section 14, Vol. 14.02 "Specification for Volumetric Ware", Standard E 694-83.

14.9 Annual Book of ASTM Standards, Section 11, Vol. 11.01 (1) "Standard Specification for Reagent Water", Standard D 1193-77, 1983, pp. 39-41.

14.10 Moody, J.R. and Lindstrom, R.M., "Selection and Cleaning of Plastic Containers for Storage of Trace Element Samples", 1977 Anal. Chem. 49 (14), pp 2264-2267.

14.11 Laxen, D.P.H. and Harrison, R.M. "Cleaning Methods for Polyethylene Containers Prior to the Determination of Trace Metals in Freshwater Samples," Anal. Chem. 1981 53, pp. 345-350.

14.12 Topol, L.E., Lev-On, M., Flanagan, J., Schwall, R.J., Jackson, A.E., Quality Assurance Manual for Precipitation Measurement Systems, 1985, U.S. Environmental Protection Agency, Environmental Monitoring Systems Laboratory, Research Triangle Park, NC 27711.

14.13 Annual Book of ASTM Standards, Section 11, Vol, 11.01 (1) "Practice for Intralaboratory Quality Control Procedures and a Discussion of Reporting Low-Level Data", Standard D4210 Annex A4, 1983, pp. 15-16.

Table 1. Method Detection Limits and Concentration Ranges for Graphite Furnace Atomic Absorption (GFAA) Trace Metal Analysis of Wet Deposition.

Analyte	Method Detection Limit, ug/L	Concentration Range, ug/L
Aluminum	3.5	3.5 - 60.0
Cadmium	0.05	0.05 - 2.00
Copper	0.9	0.9 - 40.0
Iron	1.1	1.1 - 50.0
Lead	1.1	1.1 - 50.0
Manganese	0.8	0.8 - 20.0
Zinc	0.5	0.5 - 30.0

Table 2. Operating Conditions for GFAA Determination of Trace Metals in Wet Deposition Samples.

Metal	Wavelength Setting, nm	Spectral Bandwidth, nm	Integration Mode	Graphite Tube Coating	Sample Size, uL	Furnace Setting,[a] Temp, °C / Time, sec					
						Dry		Pyrolyze		Atomize	
Al	309.3	1.0	Peak Area	pyrolytic	35	70/5	110/45	900/20	1100/35	2700/0	2700/5
Cd	228.8	1.0	Peak Height	uncoated	35	70/5	110/45	225/10	300/10	1900/0	1900/10
Cu	324.7	1.0	Peak Height	uncoated	100	80/15	110/45	550/15	750/15	2600/0	2600/5
Fe	248.3	0.3	Peak Height	pyrolytic	15	70/5	110/35	650/15	900/15	2300/0	2300/5
Pb	283.3	1.0	Peak Height	uncoated	35	70/5	110/45	350/15	550/15	2000/0	2000/5
Mn	279.5	0.3	Peak Height	uncoated	25	70/5	110/45	400/20	600/20	2500/0	2500/5
Zn	213.9	1.0	Peak Area	pyrolytic	3	70/5	110/20	325/15	425/15	1900/10	1900/0

a. These settings are specific for the Instrumentation Laboratory Model 655 Furnace Atomizer. They are to be used as guidelines.

Table 3. Suggested Calibration Standard Concentrations for GFAA Determination of Trace Metals in Wet Deposition.

Al ug/L	Cd ug/L	Cu ug/L	Fe ug/L	Mn ug/L	Pb ug/L	Zn ug/L
zero	zero	zero	zero	zero	zero	zero
3.5	0.05	1.0	1.0	1.0	1.0	0.5
15.0	0.50	10.0	12.5	5.0	12.5	7.5
30.0	1.00	20.0	25.0	10.0	25.0	15.0
45.0	1.50	30.0	37.5	15.0	37.5	22.5
60.0	2.00	40.0	50.0	20.0	50.0	30.0

Table 4. Single-Operator Precision and Bias for Trace Metals Determined from USEPA Quality Control Check Samples.

Metal	Theoretical Concentration, ug/L	Measured Concentration ug/L	n[a]	Bias, ug/L	Bias, %	Precision, s, ug/L	Precision, RSD, %
Aluminum	36.5	35.8	34	-0.7	-1.9	3.4	9.6
Cadmium	1.56	1.55	49	-0.01	-0.6	0.09	6.0
Copper	17.0	17.2	65	0.2	1.2	0.8	4.6
Iron	39.8	39.4	52	-0.4	-1.0	2.3	5.9
Manganese	13.0	13.4	32	0.4	3.1	0.6	4.2
Lead	21.8	20.9	51	-0.8	-3.7	1.0	5.0
Zinc	20.9	20.1	71	-0.8	-3.8	1.1	5.3

a. Number of replicates

Table 5. Single-Operator Precision and Bias for Trace Metals Determined from Analyte Spikes of Wet Deposition Samples.[a]

Metal	Amount Added, ug/L	n[b]	Mean Percent Recovery, %	Mean Bias, ug/L	Standard Deviation, ug/L	Statistically Significant Bias?[c]
Al	18.5[d]	12	95.7	-0.8	2.1	yes
	30.9[e]	12	102.4	0.7	4.1	no
Cd	6.11[d]	13	109.2	0.56	0.73	yes
	1.99[e]	12	95.7	-0.08	0.26	no
Cu	11.0[d]	13	100.0	0.0	0.6	no
	16.5[e]	12	101.4	0.2	0.5	yes
Fe	11.1[d]	12	89.2	-1.2	0.9	yes
	38.2[e]	12	90.6	-3.7	1.3	yes
Pb	20.8[d]	13	101.9	0.4	1.5	no
	20.5[e]	12	89.6	-2.1	2.1	yes
Mn	10.1[d]	13	107.9	0.8	0.5	yes
	17.0[e]	12	98.9	-0.2	0.4	yes
Zn	21.9[d]	13	107.8	1.7	4.7	yes
	20.2[e]	12	115.8	3.2	1.4	yes

a. Samples were spiked prior to filtration.
b. Number of replicates (each replicate is the mean of two readings)
c. 95% confidence level
d. In situ filtration collector (funnel and bottle)
e. Filtered in lab

Table 6. Typical Absorbance Values for Trace Metal GFAA Analyses.

Analyte	Concentration ug/L	Sample Volume uL	Absorbance
Aluminum	60.0	35	0.150 - 0,250
Cadmium	2.00	35	0.250 - 0.300
Copper	40.0	100	0.250 - 0.300
Iron	50.0	15	0.400 - 0.500
Lead	50.0	35	0.250 - 0.350
Manganese	20.0	25	0.400 - 0.500
Zinc	30.0	3	0.500 - 0.700

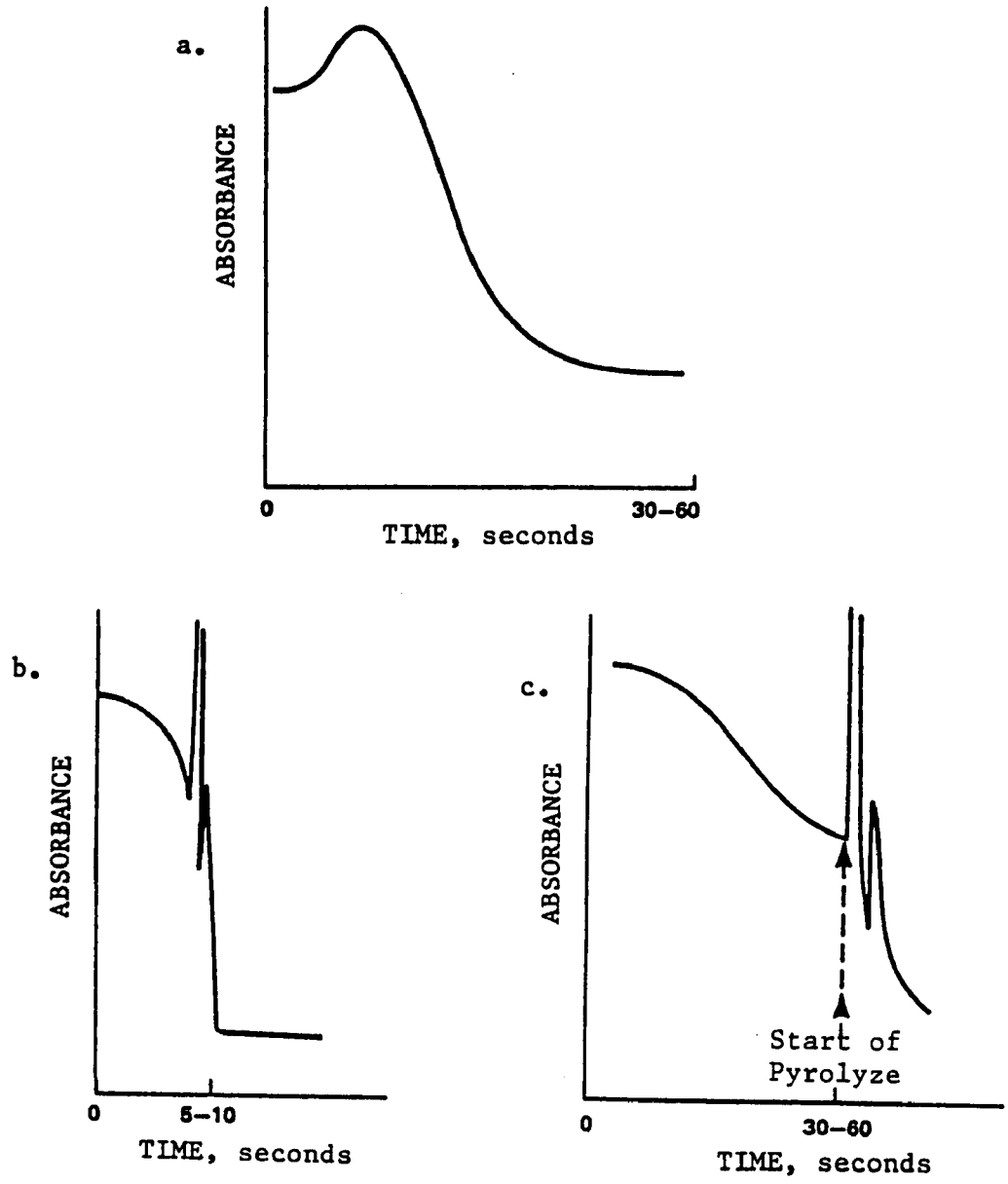

Figure 1. Recorder Traces for Drying Cycles in GFAA Analyses.

a. Correct Drying Cycle.
b. Drying Too Fast (analyte loss in dry cycle).
c. Drying Too Slow (analyte loss in pyrolyze cycle).

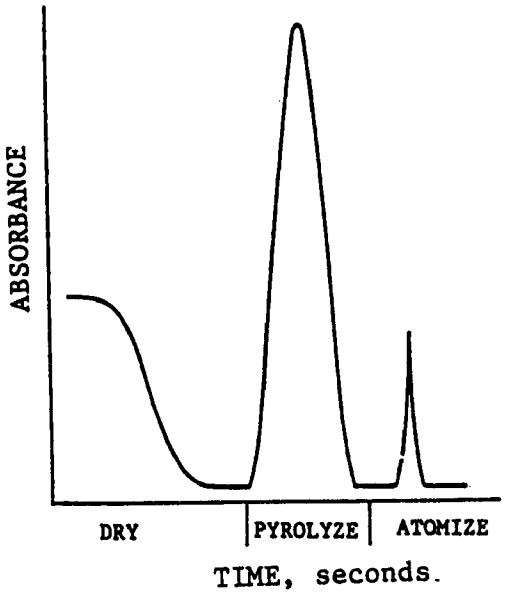

Figure 2. Ideal GFAA Recorder Trace Without Background Correction.

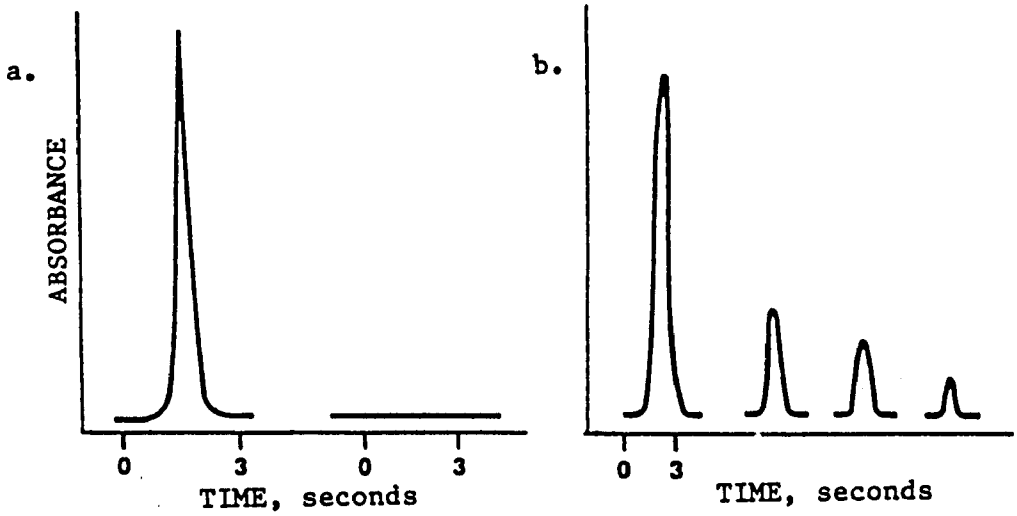

Figure 3. GFAA Atomization Cycle.

a. Ideal Atomize (zero signal on subsequent zero standard analysis).
b. Poor Atomize (sample carry-over on subsequent zero standard analysis).

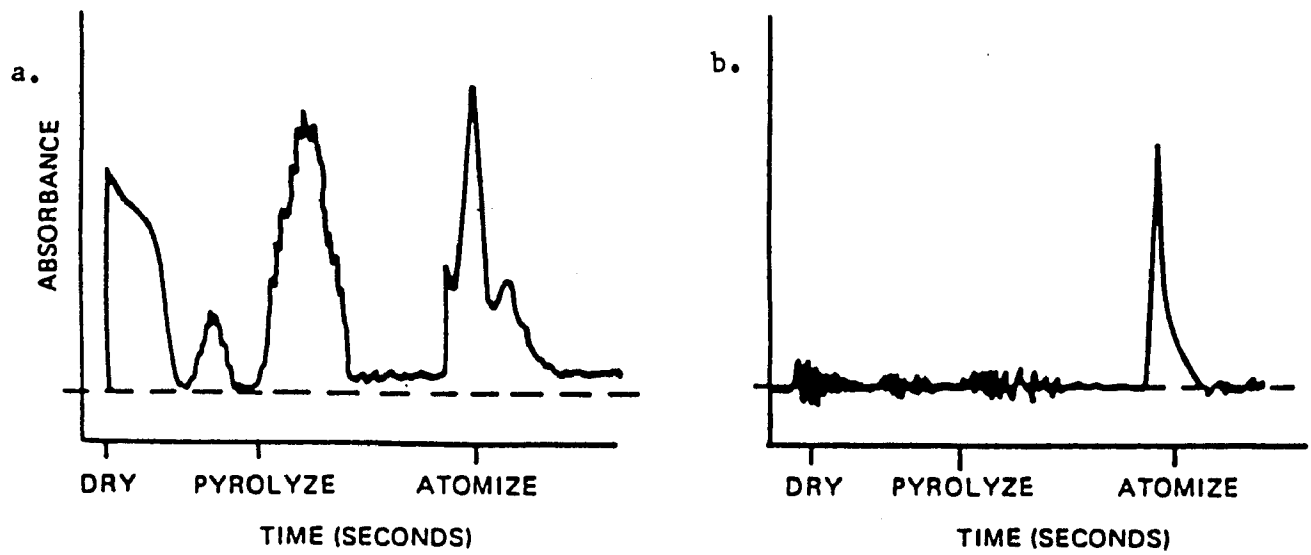

Figure 4. Typical GFAA Recorder Tracings (14.3).

a. Signal Plus Background.
b. Background Corrected Signal.

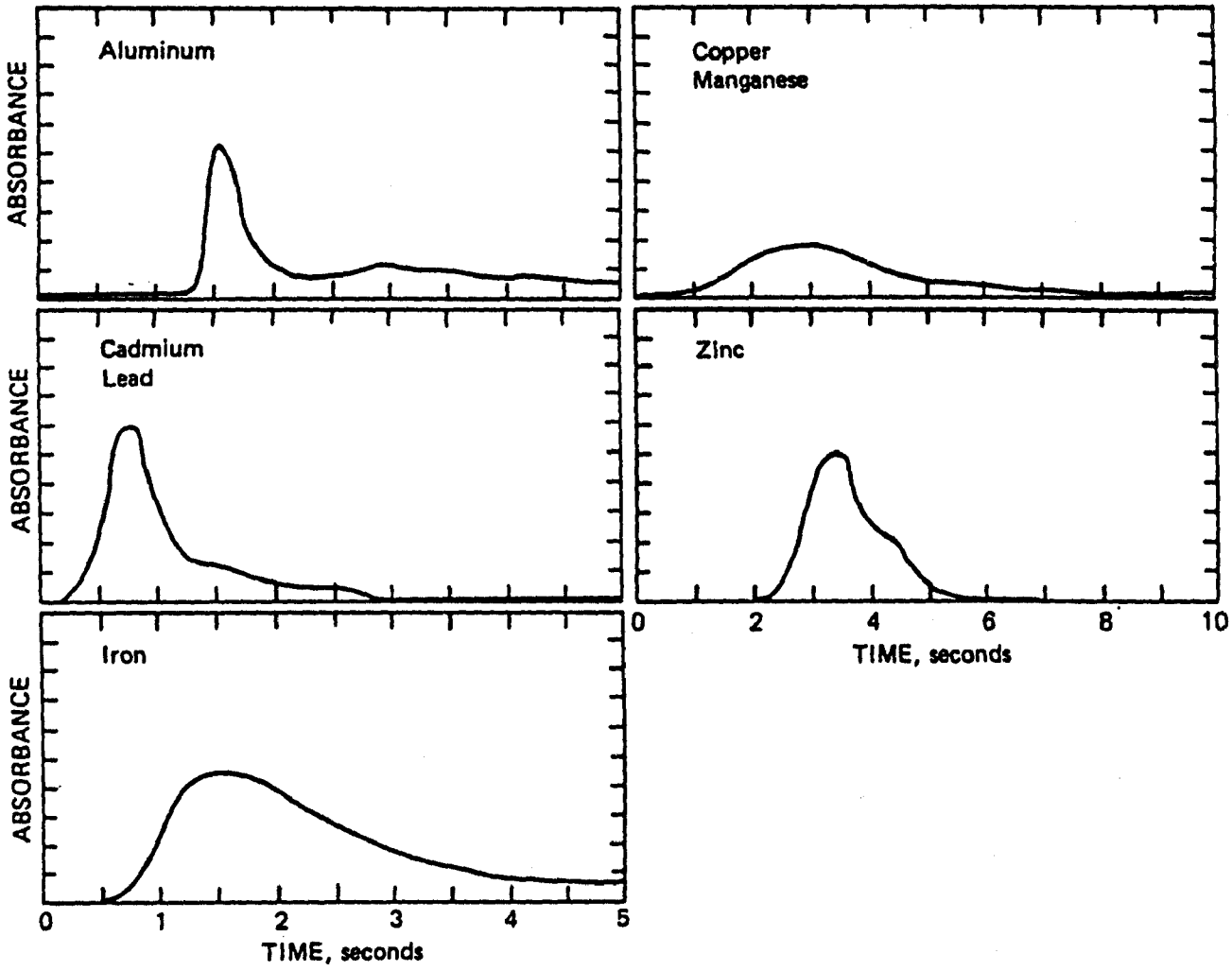

Figure 5. Trace Metal Atomization Profiles in GFAA Analyses.

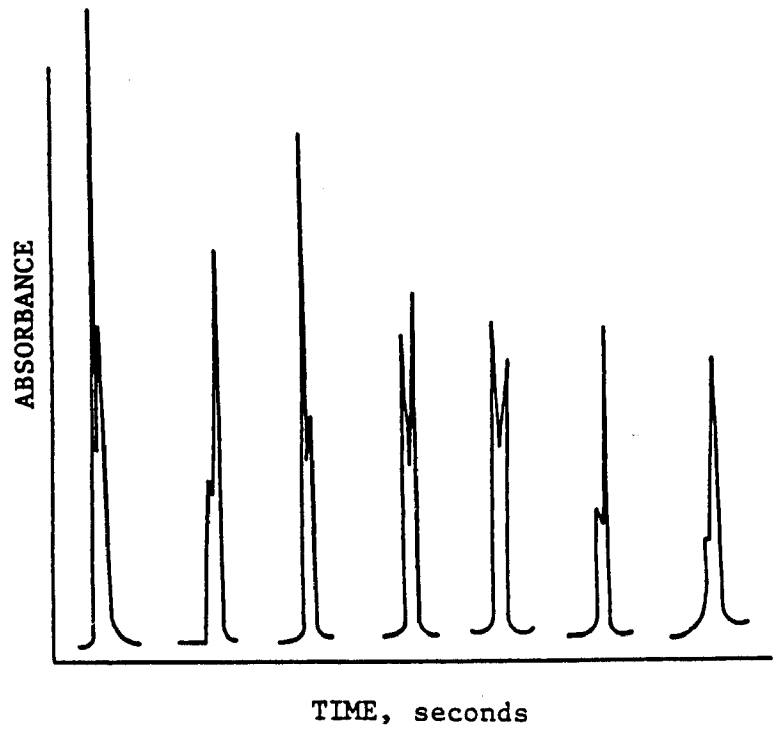

Figure 6. Multiple Atomization Peaks in GFAA Analyses (14.3).

APPENDIX A. Troubleshooting in GFAA Analysis of Wet Deposition.

Problem	Possible Cause	Possible Solution
Decrease in Sensitivity	Analyte loss in dry cycle (Fig. 1b)	Reduce dry temperature.
	Analyte loss in pyrolyze cycle (Fig. 1c)	Increase dry temperature or time.
	Degraded graphite	Change graphite tube.
	Dirty optical lenses	Clean exposed lenses with methanol.
	Incomplete atomization of analyte	Increase atomization temperature.
	Calibration standard changes	Make new calibration standards.
Poor Precision	Arcing in furnace	Change graphite tube.
		Clean electrodes with methanol.
		Tighten contacts between graphite and electrodes.
	Changes in line voltage	Put furnaces on an isolated circuit.
		Install a line surge supressor.
	Cooling water flow rate too slow	Increase flow rate.
		Clean water-cooling system.

APPENDIX A. (cont.)

Problem	Possible Cause	Possible Solution
Multiple Atomization Peaks (Fig. 6)	Degraded graphite	Install new graphite tube.
	Spattering of sample within tube	Reduce dry temperature.
	Analyte in multiple valence states	Increase pyrolysis time and/or temperature.
	Blackbody emission from graphite tube	Realign furnace.
		Reduce slit height.
		Increase lamp current and decrease photomultiplier voltage.
		Decrease atomization temperature.
Memory Effects	Sample carry over (Fig. 3b)	Cycle a series of zero standards until there are no atomzation peaks.
		Increase atomization temperature and time.
	Contamination	Change graphite tube.
		Clean furnace with methanol.
		Check zero standard for contamination.
		Check sample cups for contamination (Sect. 7.12.1).

GLOSSARY

Item	Abbreviation	Definition
Accuracy		The difference between the mean value and the true value when the latter is known or assumed. The concept of accuracy includes both bias (systematic error) and precision (random error).
Bias		A persistent positive or negative deviation of the measured value from the true value, due to the experimental method. In practice, it is expressed as the difference between the mean value obtained from repetitive testing of a homogenous sample and the accepted true value: Bias = measured value - true value
Black Body Emission		A wide spectrum of electromagnetic radiation emitted from a black body. Graphite is close to being a black body and will emit at high wavelengths and temperatures. The emission is reflected from the window of the hollow cathode lamp.
Control Limits	CL	Statistically derived values that limit the range of acceptable random error in a measurement process. They consist of an upper and lower range of acceptable values that are defined as $\pm 3s$ from the mean.
Field Blank	FB	An aliquot of reagent water or equivalent neutral reference material treated as a sample in all aspects, including exposure to a collection vessel, holding time, preservatives, and all other sample processing and analysis protocols.
Fluorohydrocarbon Plastics		Plastics formed from polymers made only with fluorine, hydrogen, and carbon.
Laboratory Spike		A known volume of method analyte that is added to a sample. The concentration of analyte spiked into the sample usually approximates the expected concentration of that analyte in the unspiked sample. The difference in concentration between the spiked and the unspiked sample is used to calculate a method percent recovery.

Mean Bias		$\frac{\text{. bias for each sample .}}{\text{total number of replicates (n)}}$
Mean Percent Recovery		$\frac{\text{. percent recovery for each sample}}{\text{total number of replicates (n)}}$
Method Detection Limit	MDL	The minimum concentration of an analyte that can be reported with 99% confidence that the value is above zero. The MDL is operationally defined as:

$$MDL = st_{(n-1,1- \ = 0.99)} \qquad (1)$$

where:

s = standard deviation of repetitive measurements (≥ 7) of a solution containing the analyte at a concentration near the MDL.

$t_{(n-1,1- \ = 0.99)}$ = student's t value for a one-tailed test appropriate for a 99% confidence level and a standard deviation estimate with n-1 degrees of freedom.

Percent Bias

The difference between the mean value obtained by repeated testing of a homogenous sample and the accepted true value expressed as a percentage of the true value:

$$\% \text{ Bias} = 100 \times [(V_m - V_t)/V_t]$$

where: V_m = measured value
V_t = true value

(1) Glaser, J.A., D.L. Foerst, G.D. McKee, S.A. Quave, and W.L. Budde. "Trace Analyses for Wastewaters". Environmental Science and Technology, 1981, Vol. 15, No. 12. pp. 1426-1435.

Percent Recovery		An estimate of the bias of an analytical method determined from analyte spikes of natural samples. The percent recovery is calculated as: % Recovery = 100 x [(a - b)/c] where: a = measured concentration of spiked sample b = measured concentration of unspiked sample c = calculated spike concentration
Polyethylene		A branched chain high molecular weight hydrocarbon, resulting from the polymerization of ethylene. High density polyethylene (HDPE) has miminal branching.
Polystyrene		A plastic formed from the polymerization of styrene (a synthetic resin made from vinyl benzene).
Precision		The degree of agreement of repeated measurements of a homogenous sample by a specific procedure, expressed in terms of dispersion of the value obtained about the mean value. It is often reported as a sample standard deviation (s).
Pyrolytic Coating		A thin surface layer of carbon produced by heat without oxygen.
Quality Control Check Sample	QCS	A sample containing known concentrations of analytes prepared by the analyst or a laboratory other than the laboratory performing the analysis. The performing laboratory uses this sample to demonstrate that it can obtain acceptable results with procedures to be used to analyze wet deposition samples. Analyte true values are known by the analyst.
Refractory		Resistant to decomposition at high temperatures.

Relative Standard Deviation	RSD	The standard deviation expressed as a percentage. $RSD = 100 \times (s/x)$ where: s = sample standard deviation x = mean value
Sensitivity		The method signal response per unit of analyte.
Standard Deviation	s	A number that represents the dispersion of values around their mean, calculated as: $$s = \frac{(x_i - x)^2}{n - 1}$$ where: x_i = each individual value x = average of all values n = number of values
Statistical Control		The description of a measurement process that is characterized solely by random errors.
Warning Limits	WL	Limits used in quality control charts to indicate that the analytical procedure is close to being out of statistical control. They consist of an upper and lower range of values that are defined as $\pm 2s$ from the mean value.
Zero Standard		A calibration standard used to set the instrument response to zero. It contains all of the matrix components of the remaining calibrants except the method analyte.

1. SCOPE AND APPLICATION

1.1 This method is applicable to the determination of calcium, magnesium, potassium, and sodium in wet deposition by flame atomic absorption spectrophotometry (FAAS).

1.2 The term "wet deposition" is used in this method to designate rain, snow, dew, sleet, and hail.

1.3 The method detection limits (MDL) for the above analytes determined from replicate analyses of quality control check solutions containing 0.053 mg/L calcium, 0.018 mg/L magnesium, 0.012 mg/L sodium, and 0.013 mg/L potassium are 0.007, 0.002, 0.003, and 0.003 mg/L, respectively. The concentration range of this method is outlined in Table 1.

1.4 Figure 1 represents cumulative frequency percentile concentration plots of calcium, magnesium, potassium, and sodium obtained from the analysis of over five thousand wet deposition samples. These data should be considered during the selection of appropriate calibration standard concentrations.

2. SUMMARY OF METHOD

2.1 A solution containing the element(s) of interest is aspirated as a fine mist into a flame where it is converted to an atomic vapor consisting of ground state atoms. These ground state atoms are capable of absorbing electromagnetic radiation over a series of very narrow, sharply defined wavelengths. A distinct line source of light, usually a hollow cathode lamp specific to the metal of interest, is used to pass a beam through the flame. Light from the source beam, less whatever intensity was absorbed by the atoms of the metal of interest, is isolated by the monochromator and measured by the photodetector. The amount of light absorbed by the analyte is quantified by comparing the light transmitted through the flame to light transmitted by a reference beam. The amount of light absorbed in the flame is proportional to the concentration of the metal in solution. The relationship between absorption and concentration is expressed by Beer's Law:

$$\log(I_o/I) = abc = A$$

where: I_o = incident radiant power
I = transmitted radiant power
a = absorptivity (constant for a given system)
b = sample path length
c = concentration of absorbing species (mg/L)
A = absorbance

The atomic absorption spectrophotometer is calibrated with standard solutions containing known concentrations of the element(s) of interest. Calibration curves are constructed from which the concentration of each analyte in the unknown sample is determined.

3. DEFINITIONS

3.1 ABSORBANCE (A) -- the logarithm to the base ten of the reciprocal of the transmittance, (T):

$$A = \log(1/T)$$

$$0.0044\ A = \text{the absorption of 1\% of the transmitted light.}$$

The absorbance is related to the analyte concentration by Beer's Law (Sect. 2.1) where $1/T = I_o/I$

3.2 ATOMIC ABSORPTION -- the absorption of electromagnetic radiation by an atom resulting in the elevation of electrons from their ground states to excited states. Atomic absorption spectrophotometry involves the measurement of light absorbed by atoms of interest as a function of the concentration of those atoms in a solution.

3.3 SPECTRAL BANDWIDTH -- the wavelength or frequency interval of radiation leaving the exit slit of a monochromator between limits set at a radiant power level half way between the continuous background and the peak of an emission line or an absorption band of negligible intrinsic width (14.1).

3.4 SPECTROPHOTOMETER -- an instrument that provides the ratio, or a function of the ratio, of the radiant power of two light beams as a function of spectral wavelength. These two beams may be separated in time and/or space.

3.5 For definitions of other terms used in this method, refer to the glossary. For an explanation of the metric system including units, symbols, and conversion factors see American Society for Testing and Materials (ASTM) Standard E 380, "Metric Practices" (14.2).

4. INTERFERENCES

4.1 Chemical interference is the most frequently encountered interference in atomic absorption spectrophotometry. A chemical interference may prevent, enhance, or suppress the formation of ground state atoms in the flame. For example, in the case of calcium determinations, the presence of phosphate or sulfate can result in the formation of a salt that hinders proper atomization of the solution when it is aspirated into the flame. This decreases the number of free, ground state atoms in the flame, resulting in lowered absorbance values. Aluminum can cause a similar interference when measuring magnesium. The addition of appropriate complexing agents to the sample solution reduces or eliminates chemical interferences and may increase the sensitivity of the method.

4.2 Alkali metals such as sodium and potassium may undergo ionization in an air-acetylene flame resulting in a decrease in ground state atoms available for measurement by atomic absorption. Addition of a large excess of an easily ionizable element such as cesium will eliminate this problem, since cesium will be preferentially ionized. The preferential ionization of the cesium solution results in an enhanced atomic absorption signal for both potassium and sodium (14.3).

4.3 If a sample containing low concentrations of the metal being measured is analyzed immediately after a sample having a concentration exceeding the highest calibration standard, sample carry-over will result in elevated readings. To prevent this interference, routinely aspirate water (Sect. 7.2) for about 15 seconds after a high concentration sample. Depending on the concentration of metal in the last sample analyzed, it may be necessary to rinse for longer time periods. Complete purging of the system is ascertained by aspirating water until the absorbance readout returns to the baseline.

4.4 Wet deposition samples are characterized by low ionic strength and rarely contain enough salts to cause interferences due to nonspecific background absorbance. The use of background correction techniques is not necessary and will decrease the signal to noise ratio and lessen precision.

5. SAFETY

5.1 The calibration standards, sample types, and most reagents used in this method pose no hazard to the analyst. Use a fume hood, protective clothing, and safety glasses when handling concentrated hydrochloric acid (Sect. 7.5-6).

5.2 Use a fume hood, protective clothing, and safety glasses when preparing the lanthanum solution. The reaction between the lanthanum oxide and acid (Sect. 7.7) is extremely exothermic.

5.3 A permanent ventilation system is required to eliminate the large quantity of hot exhaust gases produced during instrument operation. Since acetylene is a flammable gas, take precautions when using it. To avoid explosions, never pass acetylene through copper or high-copper alloy (brass, bronze) fittings or piping.

5.4 The operator must wear safety glasses to avoid eye damage from the ultraviolet light emitted by the flame.

5.5 To avoid in-line explosions, do not allow the pressure of acetylene being delivered to the instrument to exceed 15 psig (10.6 g/m^2). In the event of a flashback, turn off the gas control switch, the instrument power, and the gas tanks.

5.6 Follow manufacturer's operating guidelines carefully when optimizing gas flow rates. Too low gas flow rates can result in a combustion within the gas mixing chamber and therefore a flashback.

5.7 Check that the drain tube from the gas mixing chamber, fitted with a safety trap, is filled with water before igniting the flame. Keep the drain tube filled to prevent explosion in the chamber. The safety trap may be either looped or valved.

5.8 Avoid any contact with a hot burner head. Serious tissue burns will result.

5.9 Follow American Chemical Society guidelines regarding safe handling of chemicals used in this method (14.4).

6. APPARATUS AND EQUIPMENT

6.1 ATOMIC ABSORPTION SPECTROPHOTOMETER -- Select a double-beam instrument having a dual grating monochromator, photodetector, pressure-reducing valves, adjustable spectral bandwith, wavelength range of 190-800 nm, and provisions for interfacing with a strip chart recorder or a suitable data system.

6.1.1 Burner -- Use a long path, single slot air-acetylene burner head supplied by the manufacturer of the spectrophotometer.

6.1.2 Hollow Cathode Lamps -- Single element lamps are recommended. Multi-element lamps are available but are not recommended. They generally have a shorter lifespan, are less sensitive, require a higher operating current, and increase the chances of spectral interferences. When available, electrodeless discharge lamps (EDL) may also be used.

6.1.3 Monochromator -- To increase sensitivity of calcium and potassium determinations, use a monochromator equipped with a blaze grating in the range of 500-600 nm (14.5). For the analysis of sodium and magnesium, a blaze grating in the range of 200-250 nm is adequate.

6.1.4 Photomultiplier Tube -- A wide spectral range (160-900 nm) phototube is recommended. Select a red-sensitive phototube to detect potassium at 766.5 nm and to increase sensitivity to calcium at 422.7 nm.

6.2 The first time any glassware is used for making stock solutions and standards, clean with 0.6 N HCl and rinse thoroughly with water (Sect. 7.2) before use. Maintain a set of Class A volumetric flasks to be used only when making dilute working standards for the analysis of wet deposition samples. Store filled with water (Sect. 7.2) and covered.

6.3 LABORATORY FACILITIES -- Laboratories used for the analysis of wet deposition samples should be free from external sources of contamination. The use of laminar flow clean air workstations is recommended for sample processing and preparation to avoid the introduction of airborne contaminants. If a clean air bench is unavailable, samples must be capped or covered prior to analysis. A positive pressure environment within the laboratory is also recommended to minimize the introduction of external sources of contaminant gases and particulates. Windows within the laboratory should be kept closed at all times and sealed if air leaks are apparent. The use of disposable tacky floor mats at the entrance to the laboratory is helpful in reducing the particulate loading within the room.

7. REAGENTS AND CONSUMABLE MATERIALS

7.1 PURITY OF REAGENTS -- Use chemicals of reagent grade or better for all solutions. All reagents shall conform to the specifications of the Committee on Analytical Reagents of the American Chemical Society (ACS) where such specifications are available.

7.2 PURITY OF WATER -- Use water conforming to ASTM Specification D 1193, Type II (14.6). Point of use 0.2 micrometer filters are recommended for all faucets supplying water to prevent the introduction of bacteria and/or ion exchange resins into reagents, standard solutions, and internally formulated quality control check solutions.

7.3 ACETYLENE (C_2H_2) -- Fuel -- Minimum acceptable acetylene purity is 99.5% (v/v). Change the cylinder when the pressure reaches 75 psig (53 g/m^2) if the acetylene is packed in acetone. Pre-purified grades that contain a proprietary solvent can be used to 30 psig (21 g/m^2) before replacement. Avoid introducing these solvents into the instrument. Damage to the instrument's plumbing system can result. Solvent in the system is indicated by abnormally high pulsating background noise. To prevent solvent carryover, allow acetylene cylinders to stand for at least 24 hours before use.

CAUTION: Acetylene is a highly flammable gas. Follow the precautions in Sect. 5.3-6 regarding safe operating pressures, suitable plumbing, and operator safety.

7.4 CESIUM SOLUTION (1.0 mL = 100.0 mg Cs) -- Ionization Suppressant -- Dissolve 126.7 g of cesium chloride (CsCl), dried at 105°C for one hour, in water (Sect. 7.2) and dilute to 1 L. Store at room temperature in a high density polyethylene or polypropylene container. Add to samples and standards as directed in Sect. 9.4 and 11.4 for the determination of potassium and sodium.

7.5 HYDROCHLORIC ACID (6.0 N) -- Carefully add 1 volume of concentrated hydrochloric acid (HCl, sp gr 1.19) to an equal volume of water (Sect. 7.2).

7.6 HYDROCHLORIC ACID (0.6 N) -- Add 50 mL of concentrated hydrochloric acid (HCl, sp gr 1.19) to 900 mL of water (Sect. 7.2) and dilute to 1 L.

7.7 LANTHANUM SOLUTION (1.0 mL = 100.0 mg La) -- Releasing Agent -- In a glass 1 L volumetric flask, place 117.0 g of lanthanum oxide (La_2O_3), dried at 105°C for one hour. Add 6 N HCl very carefully to the solid in increments of about 0.5 mL. Cool the solution between additions. Continue adding the acid solution to the flask in increasing increments until a total of 500 mL of 6 N HCl has been added. Dilute to 1 L with water (Sect. 7.2). Store at room temperature in a high density polyethylene or polypropylene container. Add to samples and standards as directed in Sect. 9.4.3 and 11.4 for the determination of calcium and magnesium.

CAUTION: Dissolving lanthanum oxide in hydrochloric acid is a violently exothermic reaction; use extreme caution when dissolving the reagent. Refer to Sect. 5.2 for proper safety precautions when preparing this solution.

7.8 OXIDANT (air) -- The air may be provided by a compressor or commercially bottled gas supply. Remove oil, water, and other foreign matter from the air using a filter recommended by the manufacturer. Refer to the manufacturer's guidelines for recommended delivery pressure.

7.9 STOCK STANDARD SOLUTIONS -- Stock standard solutions may be purchased as certified solutions or prepared from ACS reagent grade materials as detailed below. Store the solutions at room temperature in high density polyethylene or polypropylene containers.

7.9.1 Calcium Solution, Stock (1.0 mL = 1.0 mg Ca) -- Add 2.497 g of calcium carbonate ($CaCO_3$), dried at 180°C for one hour, to approximately 600 mL of water (Sect. 7.2). Add concentrated hydrochloric acid (HCl, sp gr 1.19) slowly until all the solid has dissolved. Dilute to 1 L with water (Sect. 7.2).

7.9.2 Magnesium Solution, Stock (1.0 mL = 1.0 mg Mg) -- Dissolve 1.000 g of magnesium ribbon in a minimal volume of 6 N HCl and dilute to 1 L with water (Sect. 7.2).

7.9.3 Potassium Solution, Stock (1.0 mL = 1.0 mg K) -- Dissolve 1.907 g of potassium chloride (KCl), dried at 105°C for one hour, in water (Sect. 7.2) and dilute to 1 L.

7.9.4 Sodium Solution, Stock (1.0 mL = 1.0 mg Na) -- Dissolve 2.542 g of sodium chloride (NaCl), dried at 105°C for one hour, in water (Sect. 7.2) and dilute to 1 L.

7.10 SAMPLE CONTAINERS -- Use polyolefin sample cups that have been thoroughly rinsed with water (Sect. 7.2) before use.

8. SAMPLE COLLECTION, PRESERVATION, AND STORAGE

8.1 Collect samples in high density polyethylene (HDPE) containers that have been thoroughly rinsed with ASTM Type II water (7.2). Do not use strong mineral acids or alkaline detergent solutions for cleaning collection vessels. Residual acids may remain in the polyethylene matrix and slowly leach back into the sample. Alkaline detergents may also leave residues that may affect the sample chemistry. Cap collection bottles after cleaning to prevent contamination from airborne contaminants; air dry collection buckets in a laminar flow clean air workstation and wrap in polyethylene bags prior to use. If a laminar flow workstation is not available, pour out any residual rinse water and bag the buckets immediately. Do not dry the bucket interior by any method other than air drying in a laminar flow clean air workstation.

8.2 The frequency of sample collection and the choice of sampler design are dependent on the monitoring objectives. In general, the use of wet-only samplers is recommended to exclude dry deposition contributions, minimize sample contamination, retard evaporation, and enhance sample stability. Sample collection frequency may vary from subevent to monthly sampling periods. Collection periods of more than one week are not recommended since sample integrity may be compromised by longer exposure periods.

8.3 The dissolution of particulate materials can affect the stability of calcium, magnesium, sodium, and potassium in wet deposition samples (14.7). This instability generally results in a concentration increase for these constituents. Measurements should be made immediately after sample collection to obtain representative data. Refrigeration of samples at 4°C will minimize but not eliminate concentration changes.

8.3.1 Filtration of samples through a 0.45 micrometer membrane leached with water (Sect. 7.2) is effective at stabilizing samples that are influenced by the dissolution of alkaline particulate matter (14.7). Monitoring of the filtration procedure is necessary to ensure that samples are not contaminated by the membrane or filtration apparatus. Filtered samples are stable for six weeks when stored at room temperature.

9. CALIBRATION AND STANDARDIZATION

9.1 SETTING INSTRUMENT PARAMETERS

9.1.1 Lamp Current -- Refer to manufacturer's guidelines for optimization of this parameter. The use of excessively high currents will shorten lamp life. High currents also cause line broadening, resulting in a reduction in sensitivity and calibration curve linearity, especially in the determination of magnesium. The use of currents that are too low will cause lamp instability and insufficient throughput of energy through the instrument's optical system. The result is increased signal noise due to excess electrical gain applied to the photodetector.

9.1.2 Light Beam -- Position a small card over the burner slot to intercept the light beam from the hollow cathode lamp. Check that the beam is focused midway along the slot and, if necessary, focus according to the manufacturer's guidelines. Rotate the lamp within its holder for maximum energy output readings.

9.1.3 Burner/Beam Alignment -- Position a small card over the burner slot to intercept the light beam from the hollow cathode lamp. For optimal sensitivity when analyzing calcium, magnesium, potassium, and sodium, adjust the burner height so that the center of the light beam is approximately 6 mm above the surface of the burner slot. By adjusting the burner alignment and rotation, set the light beam to coincide with the burner slot. While observing from above, move the card along the full length of the burner slot to ensure that the beam is centered over the slot for the entire length of the burner. Optimize this parameter for maximum instrumental sensitivity as directed in Sect. 9.2.

9.1.4 Wavelength -- Set the wavelength of the spectrophotometer for each analyte according to Table 2 by following the manufacturer's operating guidelines. After the instrument has warmed up with the flame burning (about 30 minutes), check the wavelength and readjust if necessary.

Note: The sodium spectrum is characterized by a doublet at 589.0 nm and 589.5 nm. The wavelength chosen for sodium determinations depends on the degree of analytical sensitivity desired by the operator. A setting of 589.0 nm will provide maximum sensitivity in the concentration range of most wet deposition samples. For those samples with higher sodium concentrations, a less sensitive setting of 589.5 nm is more appropriate. Refer to Tables 1 and 2 for information regarding working ranges, standards, and detection limits for sodium at each wavelength setting.

9.1.5 Spectral Bandwidth -- The selection of optimum bandwidth depends upon the spectrum of the particular element being analyzed. For the determination of calcium, magnesium, and potassium, a relatively wide (1.0 nm) bandwidth is appropriate. Because the sodium spectrum is characterized by a doublet, use a smaller bandwidth of 0.5 nm.

9.1.6 External Gas Settings -- Follow manufacturer's recommended delivery pressures for air and acetylene. Never allow acetylene pressure to exceed 15 psig (10.6 g/m^2).

9.1.7 Nebulization Rate -- Set the acetylene and air flow rates as recommended by the manufacturer. Adjust the nebulizer sample uptake rate to approximately 5 mL/min. If an adjustable glass bead nebulizer is used, adjust it according to manufacturer's guidelines. Exact placement of the glass bead is critical to ensure that a uniform vapor of the smallest size particles is introduced into the flame. Improper spacing of the bead from the nebulizer end will result in poor precision and sensitivity. Optimize the sample uptake rate for maximum sensitivity as directed in Sect. 9.2.

Note: The nebulizer can clog easily if particulates are present in the samples. Symptoms of this are decreased sensitivity and/or dramatically increased signal noise, especially noticeable at the higher concentration levels. A thorough cleaning with a small diameter wire is usually sufficient to unclog the nebulizer.

9.1.8 Flame Conditions -- If the flame temperature is too low, compounds containing the analyte will not be completely dissociated. Alternatively, too high a flame temperature may result in ionization. In both cases, a decrease in the apparent concentration of the analyte will result. In general, calcium exhibits maximum sensitivity at higher fuel and oxidant flow rates. Maximum sensitivity for potassium is obtained with minimal gas flow rates, resulting in lower flame temperature and allowing longer residence time of the atomic vapor in the flame. The MDLs stated in Sect. 1.3 for magnesium and sodium are obtained over a wide range of flame conditions. Optimize this parameter for maximum instrumental sensitivity as directed in Sect. 9.2.

CAUTION: Follow manufacturer's operating guidelines carefully when setting gas flow rates since combustion within the gas mixing chamber can occur if caution is not exercised.

9.2 Optimization -- Allow the instrument to warm up for 30 minutes before beginning the optimization. Set the instrument readout to absorbance units and set the integration time to <0.5 seconds. Use either a strip chart recorder or set the display in a continuous read mode to monitor absorbance readings. Aspirate a calibration standard at a concentration near the midpoint of the working range (Sect. 9.4). While watching the absorbance readings, adjust the instrument parameters with small, discrete changes until maximum values are obtained. Parameters such as flame conditions, nebulization rate, and the region of maximum atom concentration in the flame are interrelated. Adjustment of any of these three parameters usually requires adjustment of the other two.

9.3 Instrument Response Time -- Determine the minimum sample uptake time before taking a reading on a sample or standard solution. Use either a strip chart recorder or set the display in a continuous read mode to monitor absorbance readings. After purging the system with water (Sect. 7.2), aspirate the highest calibration standard (Sect. 9.4) and measure the length of time necessary to obtain a stable reading. Aspirate water (Sect. 7.2) and measure the time it takes for the baseline to return to zero.

Note: If the time necessary for the baseline to return to zero is longer than 15 seconds, a clogged nebulizer may be suspect. If purging time begins to increase during sample analysis, this may also be an indication of nebulizer clogging.

9.4 CALIBRATION SOLUTIONS

9.4.1 Five calibration solutions and one zero standard are needed to generate a suitable calibration curve. The lowest calibration solution should contain the analyte of interest at a concentration greater than or equal to the method detection limit. The highest solution should approach the expected upper limit of concentration of the analyte in wet deposition. Prepare the remaining solutions such that they are evenly distributed throughout the concentration range. Suggested calibration standards for each analyte are listed in Table 2.

9.4.2 Prepare all calibration standards by diluting the stock standards (Sect. 7.9) with water (Sect. 7.2). Use glass (Class A) or plastic pipettes that are within the bias and precision tolerances specified by the manufacturer. The calibration standards are stable for three months if stored at room temperature in high density polyethylene or polypropylene containers.

9.4.3 After preparing the calibration standards to volume, add the lanthanum solution (Sect. 7.7) to the calcium and magnesium standards to yield 1000 mg/L La. Add the cesium solution (Sect. 7.4) to the potassium and sodium standards for 1000 mg/L Cs. Mix well. Use the same stock of ionization suppressant or releasing agent for the samples and the calibration standards.

Note: The final volume of each working standard solution exceeds the nominal volume by 1%. This adjustment is necessary to maintain consistency when the appropriate volume of suppressor solution is added to the wet deposition samples.

9.5 CALIBRATION

9.5.1 To establish a baseline, aspirate the zero standard and set the absorbance readout to 0.000. Aspirate the calibration standards, allowing time for each standard to equilibrate in the flame and gas mixing chamber before measuring the absorbance (Sect. 9.3). Construct calibration curves for each of the four analytes according to Sect. 12.

9.5.2 Analyze all the calibration standard solutions. The apparent concentration values must agree with the nominal concentrations within the predetermined control limits (Sect. 10.2.1) of three times the standard deviation ($\pm 3s$). If results fall outside of these limits, recalibrate the instrument. If there is a consistent bias greater than $\bar{x} \pm 2s$ and less than $\bar{x} \pm 3s$, for all of the concentration values measured, reestablish the baseline with the zero standard and reanalyze the calibration standards.

9.5.3 Verify the calibration curve after every ten samples and at the end of each day's analyses according to Sect. 10.7.

10. QUALITY CONTROL

10.1 Each laboratory using this method should develop formalized quality control protocols to continually monitor the bias and precision of all measurements. These protocols are required to ensure that the measurement system is in a state of statistical control. Estimates of bias and precision for wet deposition analyses cannot be made unless these control procedures are followed. Detailed guidelines for the development of quality assurance and quality control protocols for precipitation measurement systems are published in a manual available from the United States Environmental Protection Agency, Research Triangle Park, NC 27711 (14.8). Included in this manual are procedures for the development of statistical control charts for use in monitoring bias and precision as well as recommendations for the introduction of reagent blanks, laboratory duplicates, field duplicates, spike samples, and performance evaluation samples. These guidelines are to be used by all laboratories involved with wet deposition measurements.

10.2 ESTABLISHMENT OF WARNING AND CONTROL LIMITS -- Warning and control limits are used to monitor drift in the calibration curve, analyses of quality control check samples (QCS), and measured recoveries from laboratory spikes.

10.2.1 Calibration Curve -- After a calibration curve has been constructed according to Sect. 12, reanalyze additional aliquots of all the standards. Calculate the concentrations using the previously derived calibration curve. Repeat this procedure until at least ten

determinations at each concentration level have been made. These data should be collected on ten different days to provide a realistic estimate of the method variability. Calculate a standard deviation (s) at each concentration level. Use the nominal standard concentration as the mean value ($\bar{x}$) for determining the control limits. A warning limit of $\bar{x} \pm 2s$ and a control limit of $\bar{x} \pm 3s$ should be used. Reestablish these limits whenever instrumental operating conditions change.

10.2.2 Quality Control Check Samples (QCS) -- Calculate warning and control limits for QCS solutions from a minimum of ten analyses performed on ten days. Use the calculated standard deviation (s) at each QCS concentration level to develop the limits as described in Sect. 10.2.1. Use the certified or NBS traceable concentration as the mean (target) value. Constant positive or negative measurements with respect to the true value are indicative of a method or procedural bias. Utilize the data obtained from QCS measurements as in Sect. 10.6 to determine when the measurement system is out of statistical control. The standard deviations used to generate the QCS control limits should be comparable to the single operator precision reported in Table 4. Reestablish new warning and control limits whenever instrumental operating conditions are varied or QCS concentrations are changed.

10.2.3 Laboratory Spike Solutions -- A minimum of ten analyte spikes of wet deposition samples is required to develop a preliminary data base for the calculation of warning and control limits for spike recovery data. Select the spike concentration such that the working range of the method will not be exceeded. Samples selected for the initial spike recovery study should represent the concentration range common to wet deposition samples in order to reliably estimate the method accuracy. Calculate a mean and standard deviation of the percent recovery data using the formulas provided in the glossary. Determine warning and control limits using $\pm 2s$ and $\pm 3s$, respectively. If the data indicate that no significant method bias exists (14.9), the 100 percent recovery is used as the mean percent recovery. Where a significant bias is determined at the 95% confidence level, the control limits are centered around the bias estimate. Routine spiked sample analyses that yield percent recovery data outside of the control limits are an indication of matrix interferences that should be resolved before routine analyses are continued.

10.2.4 All warning and control limits should be reevaluated on a continual basis as additional data are collected during routine analyses. The limits should be broadened or narrowed if a recalculated standard deviation under similar operating conditions provides a different estimate of the procedure variability.

10.3 Monitor the cleaning procedure by pouring a volume of water (Sect. 7.2) that approximates the median sample size into the collection vessel. Allow the water to remain in the sealed or capped collection container for at least 24 hours and determine the concentration of the analytes of interest. If any of the measured concentrations exceed the MDL, a contamination problem is indicated in the cleaning procedure. Take corrective action before the sampling containers are used for the collection of wet deposition.

10.4 Keep daily records of calibration data and the instrument operating parameters used at the time of data acquisition. Use these historical data as general performance indicators. Gross changes in sensitivity, curve linearity, or photomultiplier tube voltage are indicative of a problem. Possibilities include instrument malfunction, clogged nebulizer, incomplete optimization, bad hollow cathode lamp, contamination, and inaccurate standard solutions.

10.5 Precision will vary over the analyte concentration range. Standard deviation (s) increases as concentration increases while relative standard deviation (RSD) decreases. At approximately 100 times the MDL, the RSD should remain less than 1%.

10.6 Analyze a quality control check sample (QCS) after a calibration curve has been established. This sample may be formulated in the laboratory or obtained from the National Bureau of Standards (NBS Standard Reference Material 2694, Simulated Rainwater). The check sample(s) selected must be within the range of the calibration standards. Prepare according to Sect. 11.4. If the measured value for the QCS falls outside of the $\pm 3s$ limits (Sect. 10.2.2), or if two successive QCS checks are outside of the $\pm 2s$ limits, a problem is indicated with the spectrophotometer or calibration curve. Reestablish the baseline with the zero standard and/or recalibrate. If the QCS analysis is still beyond control limits, inaccurate working standards might be the problem. Prepare new standards. Plot the data obtained from the QCS checks on a control chart for routine assessments of bias and precision.

10.7 Verify the calibration curve after a maximum of ten samples and at the end of each day's analyses. Analyze a zero standard and calibration standards at the low and high ends of the working range. If the routine calibration checks do not meet the criteria described in Sect. 10.6, recalibrate the system and reanalyze all samples from the last time the system was in control. Verify the new calibration curve with the QCS according to Sect. 10.6 and reanalyze all samples from the last time the measurement system was in control.

10.8 Submit a Field Blank (FB) to the laboratory for every 20 samples. The FB may consist of a water sample (Sect. 7.2) or a known reference solution that approximates the concentration levels characteristic of wet deposition. The FB is poured into the sampling vessel at the field site and undergoes identical processing and analytical protocols as the wet deposition sample(s). Use the analytical data obtained from the FB to determine any contamination introduced in the field and laboratory handling procedures. The data from the known reference solution can be used to calculate a system precision and bias.

10.9 Prepare and analyze a laboratory spike of a wet deposition sample according to the guidelines provided in "Quality Assurance Manual for Precipitation Measurement Systems" (14.8). Compare the results obtained from the spiked samples to those obtained from identical samples to which no spikes were added. Use these data to monitor the method percent recovery as described in Sect. 10.2.3.

10.10 Participation in performance evaluation studies is recommended for precipitation chemistry laboratories. The samples used for these performance audits should contain the analytes of interest at concentrations within the normal working range of the method. The true values are unknown to the analyst. Performance evaluation studies for precipitation chemistry laboratories are conducted semiannually by the USEPA Performance Evaluation Branch, Quality Assurance Division, Research Triangle Park, NC 27711.

10.11 INSTRUMENT MAINTENANCE -- Strictly adhere to manufacturer's maintenance schedule.

10.11.1 Exposed optical mirrors should be replaced yearly to maintain optimal sensitivity and precision.

10.11.2 If the instrument is used for other sample types that have high analyte concentrations it may be necessary to disassemble the entire burner-nebulizer system for cleaning before analyzing wet deposition samples. This is best accomplished by placing the components in a water (Sect. 7.2) bath in an ultrasonic cleaner for a half hour. Rinse with water (Sect. 7.2) after cleaning and allow to air dry in a dust-free environment before reassembly. Check o-rings for wear and replace if necessary.

11. PROCEDURE

11.1 Set instrument parameters and optimize the instrument each day according to Sect. 9.1-2.

11.2 Prepare all standards and construct calibration curves according to Sect. 9.4-5.

11.3 After the calibration curve is established, analyze the QCS. If the measured value for the QCS is not within the specified limits (Sect. 10.2.2), refer to Sect. 10.7.

11.4 Pipette the appropriate cesium or lanthanum solution into the empty sample cup (Cs or La:Sample = 1:100). For the determination of calcium and magnesium, use the lanthanum solution described in Sect. 7.7. For potassium and sodium determinations, add cesium solution (Sect. 7.4). Pour the sample into the sample cup containing Cs or La; 3 mL of sample for 30 uL of Cs or La is suggested. Mix well, aspirate, wait for equilibration in the flame (Sect. 9.3), and record the measured absorbance (or concentration).

11.5 If the absorbance (or concentration) for a given sample exceeds the working range of the system, dilute a separate sample with water (Sect. 7.2). Prepare and analyze according to Sect. 11.4.

11.6 When analysis is complete, rinse the system by aspirating water (Sect. 7.2) for ten minutes. Follow the manufacturer's guidelines for instrument shut-down.

12. CALCULATIONS

12.1 For each analyte of interest, calculate a linear least squares fit of the standard concentration as a function of the measured absorbance. The linear least squares equation is expressed as follows:

$$y = B_0 + B_1 x$$

where: y = standard concentration in mg/L
x = absorbance measured
B_0 = y-intercept calculated from: $\bar{y} - B_1\bar{x}$
B_1 = slope calculated from:

$$\sum_{i=1}^{n} (x_i - \bar{x})(y_i - \bar{y}) / \sum_{i=1}^{n} (x_i - \bar{x})^2$$

where: $\bar{x}$ = mean of absorbances measured
$\bar{y}$ = mean of standard concentrations
n = number of samples

The correlation coefficient should be 0.9995 or greater. Determine the concentration of analyte of interest from the calibration curve.

12.2 If the relationship between concentration and absorbance is nonlinear, use a second degree polynomial least squares equation to derive a curve with a correlation ≥ 0.9995. The second degree polynomial equation is expressed as follows:

$$y = B_2x^2 + B_1x + B_0$$

A computer is necessary for the derivation of this function. Determine the concentration of analyte of interest from the calibration curve.

12.3 An integration system or internal calibration software may also be used to provide a direct readout of the concentration of the analyte of interest.

12.4 Report concentrations in mg/L as Ca^{+2}, Mg^{+2}, Na^{+}, and K^{+}. Do not report data lower than the lowest calibration standard.

13. PRECISION AND BIAS

13.1 The mean percent recovery and mean bias of this method were determined from the analysis of spiked wet deposition samples according to ASTM Standard Practice D4210, Annex A4 (14.9). The results are summarized in Table 3. No statistically significant biases were found for any of the metal cations.

13.2 Single-operator precision and bias were obtained from the analysis of quality control check samples that approximated the levels common to wet deposition samples. These results reflect the accuracy that can be expected when the method is used by a competent operator. These data are presented in Table 4.

14. REFERENCES

14.1 Annual Book of ASTM Standards, Part 42, "Standard Definitions of Terms and Symbols Relating to Molecular Spectroscopy," Standard E 131-81, 1981, p. 66.

14.2 Annual Book of ASTM Standards, Section 11, Vol. 11.01 (1), "Excerpts from Standard for Metric Practice," Standard E 380-79, 1983, pp. 679-694.

14.3 Van Loon, J. C., Analytical Atomic Absorption Spectroscopy, Selected Methods Academic Press, Inc., New York, N. Y., 1980, p. 42.

14.4 "Safety in Academic Chemistry Laboratories," American Chemical Society Publication, Committee on Chemical Safety, 3rd Edition, 1979.

14.5 Instrumentation Laboratory, Inc., Operator's Manual Model IL951, AA/AE Spectrophotometer, Instrumentation Laboratory, Inc., Wilmington, Massachusetts, 1982, pp. 3-4.

14.6 Annual Book of ASTM Standards, Section 11, Vol. 11.01 (1), "Standard Specification for Reagent Water," Standard D 1193-77, 1983, pp. 39-41.

14.7 Peden, M. E. and Skowron, L. M., "Ionic Stability of Precipitation Samples," Atmos. Environ. 12, 1978, pp. 2343-2349.

14.8 Topol, L. E., Lev-On, M., Flanagan, J., Schwall, R. J., Jackson, A. E., Quality Assurance Manual for Precipitation Measurement Systems, 1985, U.S. Environmental Protection Agency, Environmental Monitoring Systems Laboratory, Research Triangle Park, NC 27711.

14.9 Annual Book of ASTM Standards, Section 11, Vol. 11.01 (1), "Practice for Intralaboratory Quality Control Procedures and a Discussion of Reporting Low-Level Data," Standard D4210 Annex A4, 1983, pp. 15-16.

Table 1. Method Detection Limits and Concentration Ranges for Flame Atomic Absorption Spectrophotometric Analysis of Wet Deposition.

Analyte	Method Detection Limit, mg/L	Concentration Range, mg/L
Calcium	0.007	0.030 - 3.00
Magnesium	0.002	0.010 - 1.00
Potassium	0.003	0.010 - 1.00
Sodium	0.003[a]	0.010 - 1.00[a]
	0.007[b]	0.020 - 2.00[b]

a. 589.0 nm wavelength setting
b. 589.5 nm wavelength setting

Table 2. Operating Conditions and Suggested Calibration Standard Concentrations for the Determination of Calcium, Magnesium, Potassium, and Sodium in Wet Deposition Samples.[a]

Analyte	Wavelength Setting, nm	Spectral Bandwidth, nm	Working Standards, mg/L
Calcium	422.7	1.0	zero
			0.03
			0.75
			1.50
			2.25
			3.00
Magnesium	285.2	1.0	zero
			0.01
			0.25
			0.50
			0.75
			1.00
Potassium	766.5	1.0	zero
			0.01
			0.25
			0.50
			0.75
			1.00
Sodium[b]	589.0	0.5	zero
			0.01
			0.25
			0.50
			0.75
			1.00
	589.5	0.5	zero
			0.02
			0.50
			1.00
			1.50
			2.00

a. Based on the MDL and 95th percentile concentration of each analyte obtained from analyses of over five thousand wet deposition samples from the NADP/NTN precipitation network.
b. Refer to Sect. 9.1.2 for details on wavelength selection

Table 3. Single-Operator Precision and Bias for Calcium, Magnesium, Potassium, and Sodium Determined from Analyte Spikes of Wet Deposition Samples.

Analyte	Amount Added, mg/L	n[a]	Mean Percent Recovery	Mean Bias, mg/L	Standard Deviation, mg/L	Statistically Significant Bias?[b]
Calcium	0.087	20	101.5	0.001	0.010	No
	0.221	20	98.3	-0.003	0.011	No
Magnesium	0.018	20	97.2	-0.001	0.001	No
	0.045	20	96.6	-0.002	0.002	No
Potassium	0.021	18	145.2	0.010	0.006	No
	0.052	13	108.1	0.004	0.002	No
Sodium[c]	0.099	19	107.1	0.007	0.011	No
	0.249	20	100.2	0.000	0.008	No

a. Number of replicates
b. 95% Confidence Level
c. 589.0 nm wavelength

Table 4. Single-Operator Precision and Bias for Calcium, Magnesium, Potassium, and Sodium Determined from Quality Control Check Samples.

Analyte	Theoretical Concentration, mg/L	Measured Concentration, mg/L	n[a]	Bias, mg/L	Bias, %	Precision, s, mg/L	Precision, RSD, %
Calcium	0.053	0.051	145	-0.002	-3.8	0.002	3.9
	0.406	0.413	145	0.007	1.7	0.003	0.7
Magnesium	0.018	0.017	145	-0.001	-5.6	0.001	5.9
	0.084	0.083	145	-0.001	-1.2	0.001	1.2
Potassium	0.021	0.020	127	-0.001	-4.8	0.001	5.0
	0.098	0.095	122	-0.003	-3.1	0.001	1.0
Sodium[b]	0.082	0.084	123	0.002	2.4	0.001	1.2
	0.465	0.479	122	0.014	3.0	0.003	0.6

The above data were obtained from records of measurements made under the direction of the NADP quality assurance program.

a. Number of replicates
b. 589.0 nm wavelength

Figure 1. Percentile Concentration Values Obtained from Wet Deposition Samples: Calcium, Magnesium, Potassium, and Sodium.

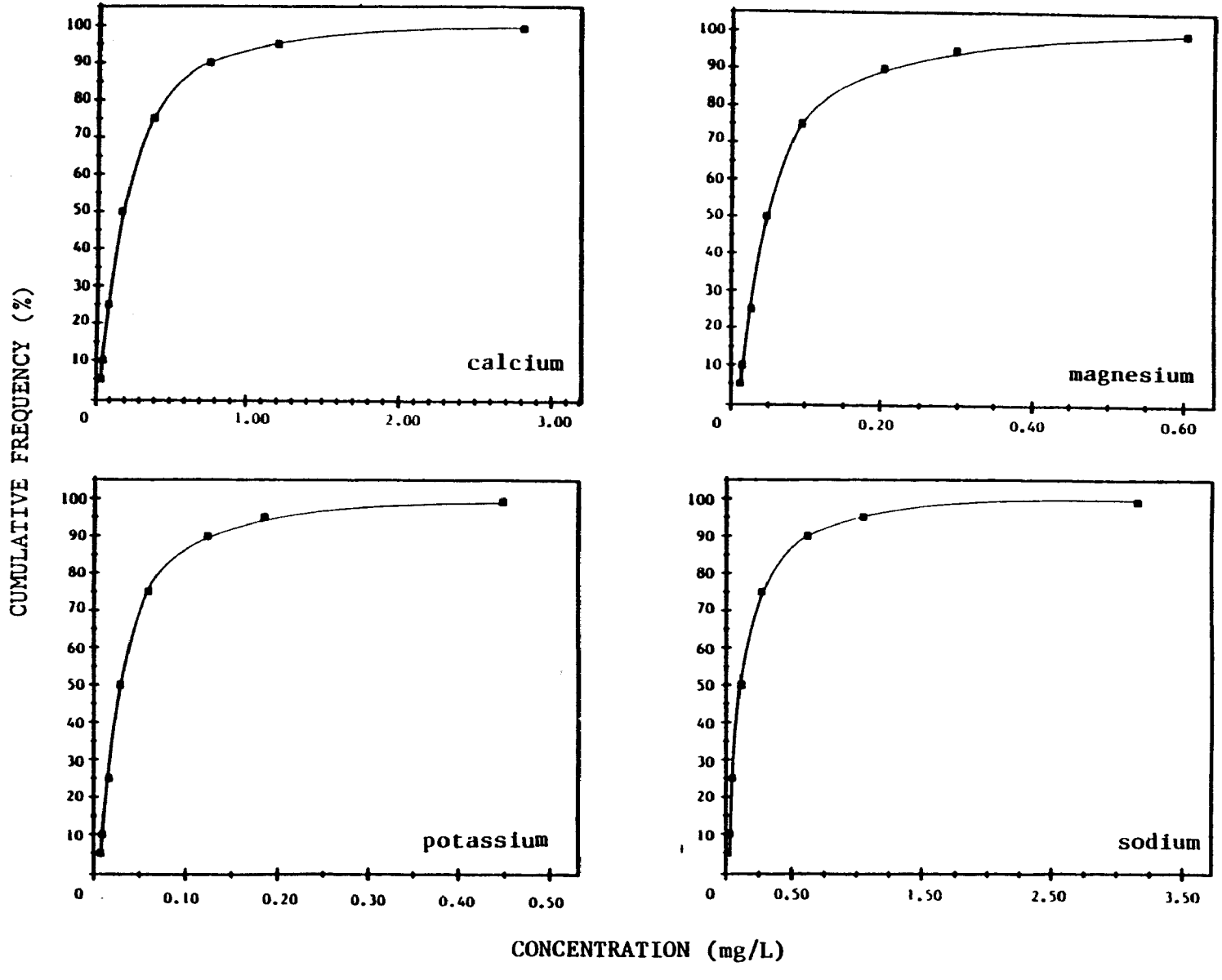

Appendix N

METHOD 200.6 -- DISSOLVED ALUMINUM, CADMIUM, COPPER, IRON, LEAD, MANGANESE, AND ZINC IN WET DEPOSITION BY GRAPHITE FURNACE ATOMIC ABSORPTION SPECTROPHOTOMETRY

Method 200.6 -- Dissolved Aluminum, Cadmium, Copper, Iron, Lead, Manganese, and Zinc in Wet Deposition by Graphite Furnace Atomic Absorption Spectrophotometry

July 1986

Performing Laboratory:

Barbara J. Keller
Loretta M. Skowron
Mark E. Peden

Illinois State Water Survey
Analytical Chemistry Unit
2204 Griffith Drive
Champaign, Illinois 61820

Sponsoring Agency:

John D. Pfaff, Project Officer

Inorganic Analysis Section
Physical and Chemical Methods Branch
United States Environmental Protection Agency
Office of Research and Development
Environmental Monitoring and Support Laboratory
Cincinnati, Ohio 45268

INDEX

Section Number	Subject
1	Scope and Application
2	Summary of Method
3	Definitions
4	Interferences
5	Safety
6	Apparatus and Equipment
7	Reagents and Consumable Materials
8	Sample Collection, Preservation and Storage
9	Calibration and Standardization
10	Quality Control
11	Procedure
12	Calculations
13	Precision and Bias
14	References

TABLES

1. Method Detection Limits and Concentration Ranges for Graphite Furnace Atomic Absorption (GFAA) Trace Metal Analysis of Wet Deposition.
2. Operating Conditions for GFAA Determination of Trace Metals in Wet Deposition Samples.
3. Suggested Calibration Standards for GFAA Determination of Trace Metals in Wet Deposition.
4. Single-Operator Precision and Bias for Trace Metals Determined from USEPA Quality Control Check Samples.
5. Single-Operator Precision and Bias for Trace Metals Determined from Analyte Spikes of Wet Deposition Samples.
6. Typical Absorbance Values for Trace Metals.

FIGURES

1. Recorder Traces for Drying Cycles in GFAA Analyses.
2. Ideal GFAA Recorder Trace, Without Background Correction.
3. GFAA Atomization Cycle.
4. Typical GFAA Recorder Tracings, Signal Plus Background versus Background Corrected Signal.
5. Trace Metal Atomization Profiles in GFAA Analyses.
6. Multiple Atomization Peaks in GFAA Analyses.

1. SCOPE AND APPLICATION

1.1 This method is applicable to the determination of aluminum, cadmium, copper, iron, lead, manganese, and zinc in wet deposition by graphite furnace atomic absorption spectrophotometry (GFAAS).

1.2 The term "wet deposition" is used in this method to designate rain, snow, dew, sleet, and hail.

1.3 The method detection limits (MDL) for the above analytes were determined from replicate analyses of calibration standards containing 10 ug/L Al, 0.25 ug/L Cd, 5.0 ug/L Cu, 5.0 ug/L Fe, 2.5 ug/L Pb, 5.0 ug/L Mn, and 2.5 ug/L Zn. The MDL's and concentration ranges of this method are presented in Table 1.

1.4 GFAAS is recommended when minimal MDLs are needed or when sample size is limited.

2. SUMMARY OF METHOD

2.1 A discrete volume of solution containing the element of interest is deposited into a graphite furnace where it is electrothermally dried, pyrolyzed, and atomized. The dense population of ground state atoms is confined in the graphite tube. Conversion of nearly all the analyte into atoms and increased atom residence times in the light path improve method detection limits up to three orders of magnitude over flame atomic absorption spectrophotometry (FAAS) methods. These ground state atoms absorb electromagnetic radiation over a series of narrow, sharply defined wavelengths. A spectrally pure line source of light, usually a hollow cathode lamp specific to the metal of interest, is used to pass a beam through the tubular graphite furnace. Light from the source beam, less whatever intensity was absorbed by the ground-state atoms of the analyte, is isolated by the monochromator and measured by the photodetector. The amount of light absorbed by the atoms is proportional to the concentration of the metal in solution. The relationship between absorption and concentration is expressed by Beer's Law:

$$\log (I_o/I) = abc = A$$

where: I_o = incident radiant power
I = transmitted radiant power
a = absorptivity (constant for a given system)
b = sample path length
c = concentration of absorbing species (ug/L)
A = absorbance

The atomic absorption spectrophotometer is calibrated with standard solutions containing known concentrations of the element(s) of interest. Calibration curves are constructed from which the concentration of each analyte in the unknown sample is determined.

3. DEFINITIONS

3.1 ABSORBANCE -- the logarithm to the base ten of the reciprocal of the transmittance (T):

$$A = \log (1/T)$$

0.0044 Absorbance = the absorption of 1% of the transmitted light.

The absorbance is related to the analyte concentration by Beer's Law where $1/T = I_o/I$.

3.2 ATOMIC ABSORPTION -- the absorption of electromagnetic radiation by an atom resulting in the elevation of electrons from their ground states to excited states. Atomic absorption spectrophotometry involves the measurement of light absorbed by atoms of interest as a function of the concentration of those atoms in a solution.

3.3 SPECTRAL BANDWIDTH -- the wavelength or frequency interval of radiation leaving the exit slit of a monochromator between limits set at a radiant power level half way between the continuous background and the peak of an emission line or an absorption band of negligible intrinsic width (14.1).

3.4 SPECTROPHOTOMETER -- an instrument that provides the ratio, or a function of the ratio, of the radiant power of two beams as a function of spectral wavelength. These two beams may be separated in time and/or space.

3.5 GRAPHITE TUBE FURNACE -- an electrothermal atomizer consisting of a tubular graphite furnace connected to a power unit. The furnace is contained in a water-cooled housing and is purged with inert gas. Voltage is passed directly through the graphite tube via electrodes, producing furnace temperatures over 3000 °C.

3.6 PLATFORM -- a thin graphite plate which is inserted into the graphite tube. The sample is deposited directly onto the platform, which heats more slowly than the surrounding tube. Atomization is delayed, and it occurs in a higher temperature environment.

3.7 HEATING CYCLES

3.7.1 Dry -- the sample is heated to uniformly evaporate the solvent.

3.7.2 Pyrolyze (Char/Ash) -- the residue is heated to a temperature selected for decomposition and volatilization of the matrix components. The temperature must be controlled to prevent vaporization of the analyte.

3.7.3 Atomize -- the furnace temperature is increased to completely convert the analyte into ground state atoms.

3.8 For definitions of other terms used in this method, refer to the glossary. For an explanation of the metric system including units, symbols, and conversion factors see American Society for Testing and Materials (ASTM) Standard E 380, "Metric Practices". (14.2)

4. INTERFERENCES

4.1 Matrix interferences are common in GFAAS, causing enhancement or suppression of the formation of ground state atoms.

4.1.1 Chemical Interferences -- If the sample contains a compound that does not dissociate in the pyrolyzation stage of the furnace program it may alter atomization rates, allow molecular analyte loss, or cause the analyte to remain involatile.

4.1.1.1 Aluminum has a tendency to form highly refractory carbides on the furnace surface. The carbide is difficult to dissociate completely. The use of pyrolytically coated graphite and a platform will reduce this interference. Since the platform heats primarily by radiation, its temperature increase is slower than that of the tube walls. Sample deposition onto the platform allows the sample to be atomized into a higher temperature environment, reducing the effect of the sample matrix. The pyrolytic coating minimizes sample penetration into the graphite, reducing carbide formation.

4.1.1.2 Aluminum forms stable nitrides at high temperatures in the presence of nitrogen. To avoid this interference, use argon as the purge gas. (14.3)

4.1.1.3 Acidifying standards and samples to 0.5% (v/v) nitric acid (1mL = 5 uL HNO_3) will prevent hydrolysis of aluminum ($Al^{+3} + H_2O \quad H^+ + AlOH^{+2}$).

4.1.1.4 Volatile halide interferences can be prevented by avoiding the use of halide acids as preservatives. Nitric acid is recommended.

4.1.1.5 Nitric acid concentrations in samples and standards must be closely matched. Different concentrations result in changes in the decomposition and volatilization of the acid and other matrix components in the pyrolyzation stage of the furnace program. This difference will also affect vaporization of the analyte.

4.1.2 Physical interferences may occur with nonuniform distribution of samples on the tube surface, resulting in varied atomization rates and/or crystal formation. This problem can be abated by an automatic sample injection system that uses a nebulizer to deposit the sample in aerosol form. (14.4)

4.1.3 Nonspecific background absorption is due to light scattering and/or molecular absorption by the matrix components. Highly volatile elements tend to vaporize before the matrix components can be completely decomposed and volatilized. Various background correction systems are available.

4.1.3.1 Zeeman -- An external magnetic field splits the atomic spectral line into polarized components. When the magnetic field is applied, only background absorbance is measured. When the magnetic field is off, the absorbance of the sample and background are both measured. The difference between the two measurements is the background corrected value.

4.1.3.2 Continuum Source -- Light from a continuum (broad-band) source and from the analyte spectral source are monitored separately. The light from the analyte source is absorbed by the analyte and the background, while light from the continuum source is absorbed only by the background. Their difference is the background corrected value.

4.1.3.3 Smith-Hieftje -- The line source is cycled at low and high currents. At low current, light is absorbed by both the analyte and the background. At high current, the emission line is broadened since unexcited atoms in the analyte line source absorb radiation and emit light at different wavelengths (self-reversal). At the high current pulses, the light is absorbed only by the background. The difference between the two measurements is the background corrected value.

4.1.4 Although wet deposition samples are characterized by low ionic strength, the use of background correction is recommended.

4.1.4.1 The nitric acid matrix of the samples may be a source of nonspecific background absorption.

4.1.4.2 The salts present in coastal wet deposition samples may cause chemical interferences (e.g. halides).

4.1.4.3 Wet deposition samples from urban areas will have a more complex matrix. These samples may require the standard addition technique (14.5).

4.1.4.4 Cadmium, lead, and zinc are highly volatile. They tend to vaporize before the matrix components can be completely decomposed and volatilized.

4.2 Memory effects can occur when analyte from a previous sample is not completely atomized. These effects will result in elevated concentration readings. To check for this interference, analyze a zero standard immediately after a high concentration sample. If an atomization peak is observed, refer to Appendix A.

5. SAFETY

5.1 Use a fume hood, protective clothing, and safety glasses when handling concentrated acids and metallic cadmium, lead, and manganese (Sect. 7.4, 7.6, 7.9.2, 7.9.5, and 7.9.6).

5.2 The operator must wear eye protection (welder's goggles) to avoid eye damage from the ultraviolet light emitted by the furnance during atomization.

5.3 To avoid severe skin burns, do not touch the furnace until it has returned to ambient temperature.

5.4 The GFAA operates at high voltages. Check furnace and electrode alignment and connections before applying power.

5.5 Metallic cadmium, lead, manganese, their stock standard solutions, and spent hollow cathode lamps are hazardous wastes. Dispose of them appropriately (14.6).

5.6 Follow American Chemical Society guidelines regarding safe handling of chemicals used in this method (14.7).

6. APPARATUS AND EQUIPMENT

6.1 ATOMIC ABSORPTION SPECTROPHOTOMETER (AAS) -- Select a single-beam or double-beam instrument with adjustable spectral bandwidth, wavelength range of 190-400 nm, background correction capabilities, zero and calibration controls.

6.1.1 Spectral Line Source -- Use single element lamps. Hollow cathode lamps or electrodeless discharge lamps (EDL) may be used.

6.1.2 Photomultiplier Tube -- Select a photomultiplier tube with optimal quantum efficiency in the wavelength range of 190-400 nm.

6.2 GRAPHITE FURNACE -- Select a furnace with precise temperature control to 2800°C, variable gas flow rates, and a cooling system.

6.3 SAMPLE INTRODUCTION SYSTEM

6.3.1 Pipette -- For manual introduction of the sample into the furnace, select a microliter pipette with disposable polypropylene tips. Precision requirements are ≤1.0% relative standard deviation (RSD) at volumes less than 10 uL and <0.7% RSD at volumes greater than 10 uL.

6.3.2 Autosampler -- An autosampler, although not required, is recommended for improved precision. It should be equipped with a dust cover to prevent airborne contamination.

NOTE: An autosampler that uses a nebulizer to deposit the sample as an aerosol will abate some interferences (Sect. 4.1.2).

6.4 DATA AQUISITION SYSTEM

6.4.1 Strip Chart Recorder -- Select a recorder with a full scale response of 0.25 seconds or better and a variable chart speed.

6.4.2 Printer -- A printer may be used to document data. Either a graphics option or a strip chart recorder in tandem with the printer is required to establish furnace parameters. (Sect. 11.3).

6.5 Maintain a set of Class A (14.8) volumetric flasks to be used only when making dilute working standards for the analysis of wet deposition samples. New glassware should be cleaned according to Sect. 7.11 before use. Store filled with water (Sect. 7.2) and covered.

6.6 LABORATORY FACILITIES -- Laboratories used for the analysis of wet deposition samples should be free from external sources of contamination. The use of laminar flow clean air work stations is recommended for sample processing and preparation to avoid the introduction of airborne contaminants. If a clean air work station is unavailable, samples must be capped or covered prior to analysis. A positive pressure environment within the laboratory is also recommended to minimize the introduction of external sources of contaminant gases and particulates. Windows within the laboratory should be kept closed at all times and sealed if air leaks are apparent. The use of disposable tacky floor mats at the entrance to the laboratory is helpful in reducing the particulate loading within the room. Point of use 0.2 um filters are recommended for all faucets supplying water (Sect. 7.2) to prevent the introduction of bacteria and/or ion exchange resins into reagents, standard solutions, and internally formulated quality control check solutions. The circulation and delivery systems for water (Sect. 7.2) must be constructed entirely of non-metal components.