EPA-600/1-77-035
June 1977

Environmental Health Effects Research Series

ELECTRO-REGENERATED ION-EXCHANGE DEIONIZATION OF DRINKING WATER

Health Effects Research Laboratory
Office of Research and Development
U.S. Environmental Protection Agency
Cincinnati, Ohio 45268

RESEARCH REPORTING SERIES

Research reports of the Office of Research and Development, U.S. Environmental Protection Agency, have been grouped into nine series. These nine broad categories were established to facilitate further development and application of environmental technology. Elimination of traditional grouping was consciously planned to foster technology transfer and a maximum interface in related fields. The nine series are:

1. Environmental Health Effects Research
2. Environmental Protection Technology
3. Ecological Research
4. Environmental Monitoring
5. Socioeconomic Environmental Studies
6. Scientific and Technical Assessment Reports (STAR)
7. Interagency Energy-Environment Research and Development
8. "Special" Reports
9. Miscellaneous Reports

This report has been assigned to the ENVIRONMENTAL HEALTH EFFECTS RESEARCH series. This series describes projects and studies relating to the tolerances of man for unhealthful substances or conditions. This work is generally assessed from a medical viewpoint, including physiological or psychological studies. In addition to toxicology and other medical specialities, study areas include biomedical instrumentation and health research techniques utilizing animals — but always with intended application to human health measures.

This document is available to the public through the National Technical Information Service, Springfield, Virginia 22161.

EPA-600/1-77-035
June 1977

ELECTRO-REGENERATED ION-EXCHANGE DEIONIZATION OF DRINKING WATER

by

Thomas A. Davis
Southern Research Institute
Birmingham, Alabama 35205

Contract No. 68-03-2209

Project Officer

Frederick C. Kopfler
Health Effects Research Laboratory
Cincinnati, Ohio 45268

HEALTH EFFECTS RESEARCH LABORATORY
OFFICE OF RESEARCH AND DEVELOPMENT
U.S. ENVIRONMENTAL PROTECTION AGENCY
CINCINNATI, OHIO 45268

DISCLAIMER

This report has been reviewed by the Health Effects Research Laboratory, U.S. Environmental Protection Agency, and approved for publication. Approval does not signify that the contents necessarily reflect the views and policies of the U.S. Environmental Protection Agency, nor does mention of trade names or commercial products constitute endorsement or recommendation for use.

FOREWORD

Man and his environment must be protected from the adverse effects of pesticides, radiation, noise and other forms of pollution, and the unwise management of solid waste. Efforts to protect the environment require a focus that recognizes the interplay between the components of our physical environment--air, water, and land. In Cincinnati, the Environmental Research Center possesses this multidisciplinary focus through programs engaged in

- studies on the effects of environmental contaminants on man and the biosphere, and
- a search for ways to prevent contamination and to recycle valuable resources.

The Health Effects Research Laboratory conducts studies to identify environmental contaminants singly or in combination, discern their relationships, and to detect, define, and quantify their health and economic effects utilizing appropriate clinical, epidemiological, toxicological, and socio-economic assessment methodologies.

Trace quantities of organic chemicals are present in most drinking waters. This study was conducted as part of a broad research effort to determine the potential health effects of these substances. The objective of the study was to develop a technique for removing inorganic ions from drinking water samples without affecting the organic species. Water thus treated could be subjected to reverse osmosis to produce concentrated solutions of organics with salt content low enough to be acceptable for animal feeding experiments.

R.J. Garner, Director
Health Effects Research Laboratory

ABSTRACT

This report presents the development of a device for removal of inorganic salts from drinking water to facilitate the subsequent concentration of organic solutes for bioassay. Prior attempts to concentrate the organic solutes by reverse osmosis (RO) resulted in precipitation of the inorganic salts. To prevent this precipitation, the drinking water is pretreated by Electro-Regenerated Ion-exchange Deionization (ERID). The ERID device developed for this purpose is essentially an electrodialyzer with thick depleting compartments packed with a mixture of anion- and cation-exchange resin beads. The resins provide a conductive medium for electrical transport of ions out of the demineralized water, through ion-exchange membranes, and into a concentrated waste stream.

Several types of ion-exchange resins were evaluated to determine their electro-regenerability, their affinity for organic solutes, and their release of contaminants. The electrical conductivity of the resins equilibrated with solutions of hydrochloric acid and sodium hydroxide provided an indication of the electro-regenerability of the resins. The uptake of test organic solutes and the release of contaminants were measured in batch and continuous experiments with aqueous media. The best resin combination, a 2:1 mixture of Amberlite IRA-68 and Duolite C-433, could be continuously regenerated while deionizing tap water from Birmingham, Alabama, which contains appreciable amounts of calcium, sulfate, and bicarbonate. Precipitation of calcium carbonate in the waste compartments was prevented by acidification of the waste feed.

Experiments with combined ERID-RO treatment demonstrated that, while greater than 90% demineralization was achieved with ERID, uncharged organic solutes tended to pass through the ERID device with little change in concentration. They could be concentrated by the RO unit if their molecular weights were sufficiently high to permit rejection by the RO membranes. Organic acids and bases tended to be removed from solution by the ion-exchange resins, but they could be recovered by rinsing the resins with acidic or basic solutions.

CONTENTS

Foreword iii
Abstract iv
Figures. vi
Tables.. vii
Acknowledgments. viii

I. Introduction. 1
II. Conclusions 6
III. Recommendations 7
IV. Evaluation of Candidate Resins. 8
V. Design and Evaluation of ERID Devices 30
VI. Performance of Combined ERID-RO System. 55

References 59
Glossary 60
Appendices

A. Recovery of Bis(2-chloroethyl) Ether by Sparging. . 62
B. Reverse Osmosis Treatment of Water containing Test Organic Solutes. 65
C. Procedures for Operation and Maintenance of the Prototype ERID Device 67
D. Sources of Materials for ERID Devices 70

FIGURES

Number		Page
1	Mechanism of ERID	3
2	Exploded view of plate-and-frame ERID device.	32
3	Cylindrical ERID device	34
4	Fiber ERID device	35
5	Design of teflon resin compartments	43
6	Gasket spacer for waste compartments.	45
7	Flow scheme for feedwater proportioning system. . . .	47
8	Effect of feed conductivity on operating parameters of ERID	50
9	Effect of applied voltage on operating parameters of ERID	51
10	Reverse osmosis treatment of a solution containing 2.05 μg/liter of dimethylnitrosamine.	57

TABLES

Number		Page
1	Characteristics and Conductivities of Candidate Resins	10
2	Affinity of Resins for Test Organic Solutes	15
3	Results of Dynamic Sorption Studies	17
4	Data from Affinity Studies with Humic Acid Fraction and CC Resin	20
5	Humic Acid Removed by IRA-68 Anion-Exchange Resin	22
6	Carbon Analyses of Extracts from Ion-Exchange Resins	26
7	Organic Carbon Content of Aqueous Extracts from Resins Washed with Organic Solvents	28
8	Comparative Data from ERID Devices with NaCl Feed Solution	42
9	Performance of ERID Device with 8 Teflon Resin Compartments	48
10	Performance of Prototype ERID Device with Tap Water as Feed	52
11	Carbon Content of Water before and after Treatment with Prototype ERID Device containing 2:1 Mixture of IRA-68 and C-433	54
12	Recovery of Bis(2-chloroethyl) Ether by Sparging	64

ACKNOWLEDGMENTS

The project was carried out in the Engineering and Applied Sciences Research Department under the general direction of Dr. Donald R. Cowsar, Head, Biosystems Division, and under the direct supervision of Dr. Thomas A. Davis, Principal Investigator. The laboratory ERID and RO experiments were carried out by Mr. Joseph J. Forbes, Assistant Chemical Engineer, with the assistance of Mr. R. David Couch, Engineering Technician, and Mr. Raphael J. Thornton, Chemical Technician. Mrs. Ruby James, Research Chemist, and Ms. Christina Gwin, Associate Chemist, carried out analytical studies with test organic solutes.

TOC analyses were performed by Mr. Heinz J. Kollig of Environmental Research Laboratory of the Environmental Protection Agency, Athens, Georgia.

Dr. Robert Kunin of Rohm and Haas Company, Dr. I.M. Abrams of Diamond Shamrock Company, and Mr. Michael Gottlieb of Ionac Chemical Company graciously provided samples of resins, technical data, and advice on selection of candidate resins.

SECTION I

INTRODUCTION

The Environmental Protection Agency has an ongoing research program to determine the toxicity of the organic contaminants present in drinking water. To accomplish this objective, these substances must be obtained in a state suitable for bioassay. The total-organic-carbon content of drinking water from a surface source is about 2 mg/liter. Thus, more than 1500 liters (396 gal) of drinking water must be processed to obtain at least 3 g of organics for animal toxicity tests.

Other contractors have conducted research on the use of reverse osmosis to concentrate the organic chemical contaminants of drinking water. With cellulose acetate reverse-osmosis membranes, they have achieved 10 to 20-fold reductions of the volume while retaining 85% of the total organic carbon present in the original sample. Further concentration of the samples is accomplished by lyophilization, but precipitation of large quantities of salt occurs. The salt content of the aqueous concentrate is too high for bioassay, and furthermore, some organics are co-precipitated with the salts. Extraction of these salts and concentrates with penetane and methylene chloride has not proved efficient; consequently, overall recovery of the organics is poor.

The purpose of the research program described herein is to devise a practical method for deionizing aqueous solutions of organics derived from drinking water. Such removal would allow the aqueous solutions of organics to be concentrated to a small volume for bioassay. The process for removing the inorganic salts must not change the content of organics in the sample by introducing contaminants, irreversibly absorbing the organic solutes, or changing the chemical nature of the organic solutes. Such a restraint greatly limits the applicability of conventional demineralization processes.

Of the available deionization processes, ion exchange is the most effective for complete removal of salts from solution. However, the cyclic nature of the process and the potential loss of organics during chemical regeneration and subsequent rinsing of the resins makes conventional ion-exchange processes unsuitable for this application. Instead, a process was chosen

in which resins would be continuously regenerated electrically. This process is called Electro-Regenerated Ion-exchange Deionization (ERID).

In the ERID process, ion-exchange resins are used to remove dissolved salts from solution, and the ion-exchange capacity of the resins is regenerated in situ electrically. The essential components of an ERID device, as shown in Figure 1, are the anode, the anode-rinse-solution (anolyte) compartment, the anion-exchange membrane, the resin bed containing a mixture of anion- and cation-exchange resin beads, the cation-exchange membrane, the cathode-rinse-solution (catholyte) compartment, and the cathode. The feed solution containing the salt to be removed flows through the resin bed and the rinse compartments.

The deionization process is illustrated in the bottom portion of Figure 1. As the feed solution comes in contact with ion-exchange resin beads, the Na^+ ions exchange with H^+ ions on the cation-exchange resin beads, and the Cl^- ions exchange with OH^- ions on the anion-exchange resin beads. The H^+ and OH^- ions released in the process combine to form water. Thus the resins are converted from the regenerated H^+ and OH^- forms to the exhausted Na^+ and Cl^- forms.

The electro-regeneration process is illustrated in the top portion of Figure 1. When an electric potential is applied to the electrodes, the cations, Na^+ and H^+, migrate toward the cathode, and the anions, Cl^- and OH^-, migrate toward the anode. The ion-exchange beads are much more conductive for their respective ions than the solution surrounding them; therefore, whenever possible, the ions migrate from bead to bead in the direction of the appropriate electrode. When Na^+ ions are removed from exchange sites on cation-exchange resin beads, they are replaced by the most readily available cations, which may be Na^+ ions from nearby exchange sites, Na^+ ions from the surrounding solution, or H^+ ions formed by dissociation of water. Similar considerations apply to the anions.

The ion-exchange membranes that form the barriers between the resin bed and the rinse streams permit ions of the proper electrical charge to leave the resin bed but they prevent oppositely charged ions from entering the resin bed. For example, the cation-exchange membrane (C in Figure 1) which is essentially a sheet of cation-exchange resin, is permeable to Na^+ and H^+ ions but impermeable to Cl^- and OH^- ions. The ions that pass through the membranes are carried out of the ERID unit with the electrode rinse solutions.

The ERID device can be operated continuously at steady state with the electrodes being energized while the water is being deionized, or it can be operated cyclicly. In cyclic operation, the water is demineralized by simple ion exchange;

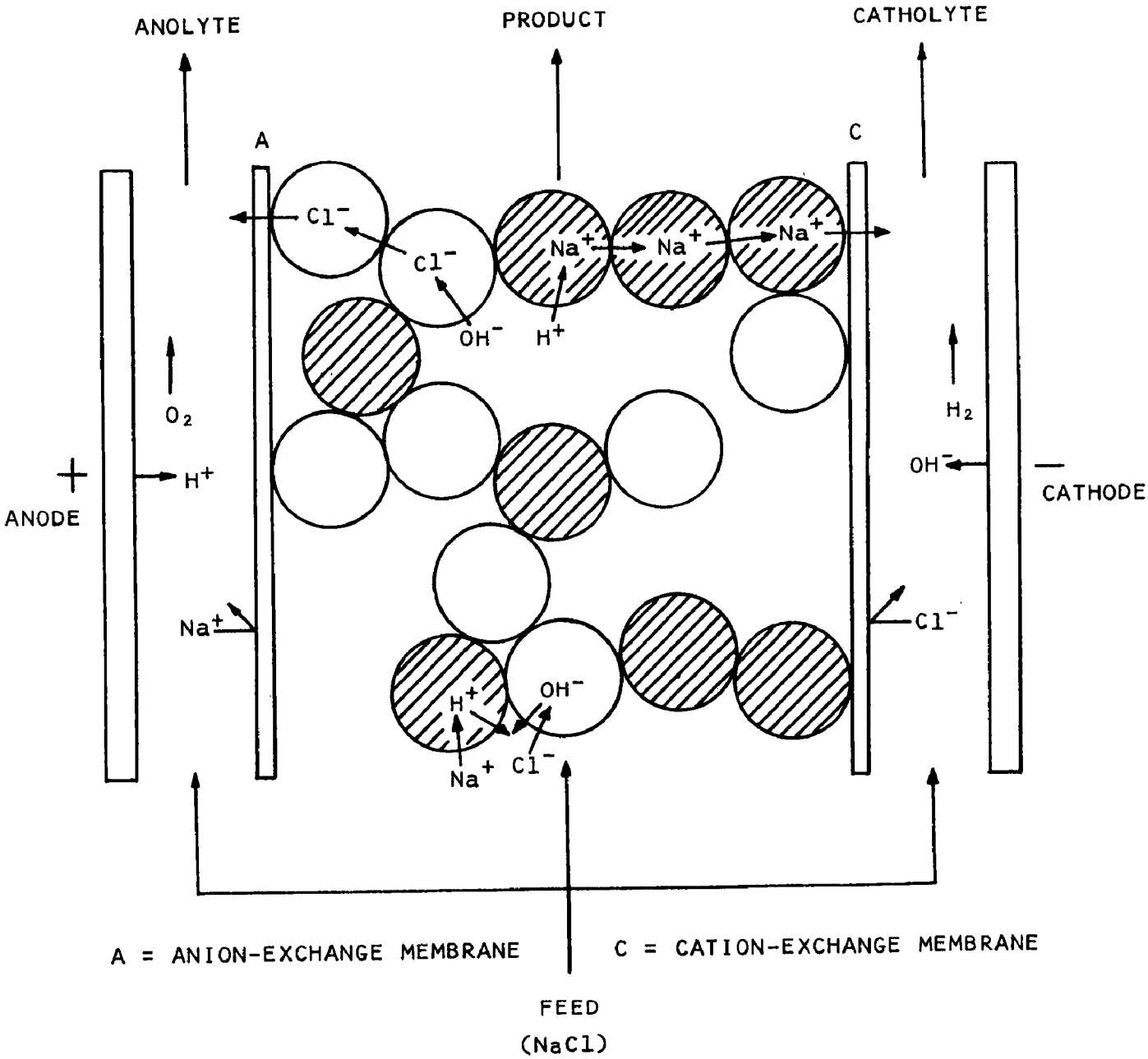

Figure 1. Mechanism of ERID

then the electrodes are energized when product water is not being used to regenerate the resin bed. If the resins are selected properly, the conductivity of the resin bed is very low when the resins are in the regenerated form. Therefore, the power consumption is minimal if the electrodes remain energized during periods of little or no demand for deionized water. The ERID unit can deionize water at rates in excess of its continuous capacity for short periods because the exchange capacity of the resins is available to meet surge demands.

Selection of ion-exchange resins for use in the ERID unit is very important because some resins can be regenerated more efficiently than others. Early investigators, including Walters, Wieser and Marek[1], Glueckauf[2], and Sammon and Watts[3], demonstrated that ion-exchange resins could be regenerated electrically but the coulomb efficiencies they achieved were usually below 50% and were often below 10% when dilute feed solutions were used. These workers observed that the degree to which the resins could be regenerated was quite low, and efforts to regenerate them further resulted in progressively lower coulomb efficiencies. Walters, Weiser and Marek[1] obtained 6.2% regeneration with 52% coulomb efficiency, but by the time the resin was 14% regenerated, the coulomb efficiency for the entire time period had dropped to 17%, and the actual coulomb efficiency at the end of the regeneration period was only 5%.

Prober and Myers[4] measured the electrical conductivities of several types of ion-exchange beads. Our evaluation of their data revealed that the strong-acid and strong-base ion-exchange resins used by previous investigators were much more conductive in the regenerated form than in the exhausted form. Thus, when a portion of the resin bed had been regenerated electrically, most of the current passed through that regenerated portion and was not effective in regenerating the remaining portion of the resin. It follows that more efficient regeneration would be achieved if the resins were more conductive in the exhausted form than in the regenerated form. On the basis of this hypothesis, a research program was conducted under sponsorship of the Artificial Kidney-Chronic Uremia Program of the National Institute of Arthritis, Metabolism, and Digestive Diseases (NIAMDD) to develop an efficient system of electro-regeneration to deionize water for use in artificial kidneys.

The research for NIAMDD involved selection of resins with suitable electrical conductivity. In that situation it was sufficient that the resins be chemically stable and electrically regenerable. However, for the present application it is necessary to know what and how much organic matter is picked up or released by candidate resins or other components in the system. If the organic content of the water does change, then we must determine whether the resins can be pretreated to prevent release of organics, and whether organics removed by the

resins can be recovered in usable form. The other tasks involved were the design of a prototype ERID device to demineralize water at a flow rate of 600 ml/min (9.5 gph) and the evaluation of the prototype alone and in conjunction with reverse osmosis.

SECTION II

CONCLUSIONS

ERID is an effective process for continuous deionization of drinking water prior to treatment with reverse osmosis to recover trace organic solutes.

When sodium chloride is the primary salt in the water, the ERID device can be operated for an extended period under a variety of conditions without danger of malfunction. When calcium salts constitute a large fraction of the total inorganic content of the water, it is necessary to operate the ERID device under conditions that do not allow precipitation of calcium salts. Addition of hydrochloric acid to the solution entering the cathode and intermediate-waste compartments effectively prevents precipitation of calcium salts in the ERID device.

Ionic organic species such as amines and carboxylic acids are removed from solution by ion-exchange resins. Most of them, humic acid being the major exception, can be recovered from the resins by rinsing with acid or base.

Some non-ionic organic species with low water solubility are removed by the resins, but they may be recovered by rinsing the resins with organic solvents.

Other organic solutes, e.g., nitrosamines, pass through the ERID device with no appreciable change in concentration.

Commercial ion-exchange resins contain leachable organic contaminants that can be removed by serial rinsing with acid, base, methanol, diethyl ether, acetonitrile, and distilled water.

Bis(2-chloroethyl) ether, and probably other volatile solutes with low water solubility, can be effectively recovered from water by sparging with nitrogen.

Amines appear to be absorbed by the polyamide hollow fibers in the Permasep® reverse osmosis module.

SECTION III

RECOMMENDATIONS

A 2:1 mixture of Amberlite® IRA-68 and Duolite® C-433 resins and Ionac MA-3475R and MC-3470 membranes should be used in the prototype ERID device.

Ionac CC, a weak-acid cation-exchange resin with low-swelling characteristics, should receive further consideration. If an effective method can be devised for removal of organic contaminants, CC may be more useful than C-433 in the ERID device.

Sparging of drinking water with nitrogen to recover volatile organic solutes merits further study. A continuous sparging process should be developed for pretreatment of drinking water to recover volatile organics prior to treatment with ERID and reverse osmosis.

A thorough study should be made to determine the extent to which organic solutes, particularly amines, are absorbed by the polyamide hollow fibers in the Permasep® reverse osmosis module.

SECTION IV

EVALUATION OF CANDIDATE RESINS

ELECTRICAL CONDUCTIVITY OF RESINS

Since electrical conductivity in various ionic forms determined the electro-regenerability of resins, it was evident that data concerning the electrical conductivities of various commercially available ion-exchange resins would be needed to make a selection of the most suitable resins for electro-regeneration. The alternative would be to attempt electro-regeneration of various combinations of resins with hopes of finding a satisfactory combination. Since there are scores of ion-exchange resins on the market, this second alternative appeared to involve unrealistically high costs. Since the manufacturers of ion-exchange resins do not provide data concerning the electrical conductivities of their resins, it was necessary to devise an experimental method of obtaining the data.

The equipment for measuring electrical conductivities of resins consists of two identical conductivity cells connected hydraulically in series. One of the cells contains the resin to be tested. The other cell contains only the electrolyte solution with which the resin is equilibrated. Initially a concentrated solution of the electrolyte is circulated through the cells, and the conductance of the cells is measured precisely with a conductivity bridge (Industrial Instruments Model RC-18). Stepwise dilutions of the electrolyte are made with deionized water, and the conductance values are measured and recorded. At high solution concentrations the conductance of the solution is greater than that of the resin-filled cell, but in dilute solutions the resin is more conductive than the solution. The values of conductance measured in the two cells are plotted on logarithmic coordinates, and the point at which the curve crosses the diagonal is determined. This equiconductance point, the point at which the resin and solution have the same conductivity, is reported as the conductivity of the resin in that particular electrolyte solution.

NaOH and HCl were the electrolytes used in the initial screening of resins to determine their electro-regenerability. In NaOH, the ion-exchange capacity of cation-exchange resins is completely exhausted with sodium ions, and the anion-exchange capacity is completely regenerated with hydroxyl ions. In HCl, the cation-exchange resins are regenerated, and the anion-exchange resins are exhausted. Therefore, the conductivities of resins in NaOH and HCl would be a basis for determining the regenerability of a mixed bed of resins exhausted with NaCl, which is the major inorganic salt present in many drinking waters.

The identification, characteristics, and conductivity data for all of the candidate resins are presented in Table 1. The C-20 strong-acid resin and IRA-400 strong-base resin were not really considered candidates for electro-regeneration, but their conductivities were presented for comparison with the others. All of the weak-acid cation-exchange resins except CS-100 had conductivities in the range of 20,000 to 35,000 μS/cm in the sodium form, and the four measurements we made in HCl showed low values in the regenerated form. We concluded that all of the weak-acid resins except CS-100 would be suitable for electro-regeneration. Therefore, selection of the best resin was based on other factors besides conductivity.

From the great variety of commercially available anion-exchange resins, we selected representative samples of the important classes of resins for our evaluation. Selection was based on ion-exchange functionality and the chemical and physical makeup of the resin matrix. The Type-I strong-base resins have quaternary amine functional groups. The Type II strong-base resins have a hydroxyethyl group attached to the nitrogen that reduces the basicity and chemical stability of the quaternary amine. Intermediate-base resins have a mixture of tertiary and quaternary functional groups, and weak-base resins have primary, secondary, and tertiary amine functional groups in various proportions. Only the tertiary amine groups of weak-base resins would be expected to be useful in this application. The intermediate-base anion-exchange resins had electrical properties that appeared most suitable for electro-regeneration, and IRA-68 had the greatest difference in conductivity between the exhausted and regenerated forms. The two resins with combined anion- and cation-exchange functionality were not sufficiently conductive for our purposes.

AFFINITY OF RESINS FOR ORGANIC SOLUTES

Some organic solutes have a high affinity for ion-exchange materials. Organic acids and bases with low molecular weight and high degrees of ionization behave similarly to inorganic electrolytes in that they can enter into reversible ion exchange with the resins. On the other hand, it is difficult

TABLE 1. CHARACTERISTICS AND CONDUTIVITIES OF CANDIDATE RESINS

Designation	Characteristics	Equiconductance points,[a] µS/cm in NaOH	in HCl
Weak-acid cation exchange resins			
IRC-84[b]	Crosslinked poly(acrylic acid) gel	30,000	350
IRC-50[b]	Methacrylic acid-DVB gel	24,800	106
IRC-72[b]	Methacrylic acid macroporous	25,000	
C-433[c]	Crosslinked poly(acrylic acid) gel	35,000	250
CS-100[c]	Phenolic macroporous beads	5,200	280
Bio-Rex 70[d]	Acrylic macroporous beads	29,000	
Chelex 100[d]	Styrene-DVB, imminodiacetate	20,000	
CC[e]	Acrylic-DVB, low swelling	33,000	
CNN[e]	Acrylic-DVB, high capacity	34,000	
Intermediate-acid cation-exchange resin			
ES-63[c]	Phosphonic acid functional groups	8,000	870
Strong-acid cation-exchange resin			
C-20[c]	Sulfonated styrene-DVB gel beads	23,100	77,000
Weak-base anion-exchange resins			
Stratabed 93[b]	Macroporous styrene-DVB beads	50	3,100
ES-374[c]	Acrylic-DVB macroporous	49	15,500
AFP-329[e]	Macroporous styrene-DVB beads		7,400
A-260[e]	Aliphatic polyamine granules		34,000
WBS[e]	Macroporous styrene-DVB beads		18,000
IRA-47[b]	Polyamine gel beads		
SRI-1	2:3 ratio PEI:EPON bulk gel		5,700
SRI-2	1:1 ratio PEI:EPON on string		7,000
SRI-3	3:2 ratio PEI:EPON on string		20,000
Intermediate-base anion-exchange resins			
ES-340[c]	Epoxy-amine gel beads	2,900	49,000
A-30B[c]	Gel beads	2,160	50,000
A-30G[c]	Gel Granules	160	30,000
A-57[c]	Porous beads	3,100	55,000
Bio-Rex 5[d]	Analytical grade gel beads	2,150	39,000
A-305[e]	Epoxy-polyamine gel granules, high capacity		45,000
IRA-68[b]	Crosslinked acrylic gel	74	30,000
A-365[e]	Acrylic gel	>1,000	44,000
Type-II strong-base anion-exchange resins			
IRA-410[b]	Styrene-DVB gel beads	7,500	12,000
IRA-910[b]	Macroporous styrene-DVB beads	16,000	13,250
ASB-2[e]	Styrene-DVB gel beads	9,100	13,000
A-550[e]	Styrene, no DVB	16,000	20,000
Type-I strong-base anion-exchange resin			
IRA-400[b]	Quaternized styrene-DVB gel beads	61,000	21,000
Anion- and cation-exchange groups on same resin			
DS-21475[c]	Thermally regenerable resin	420	110
AG11A8[d]	Ion retardation resin		6,000

a. The point at which the resin and the equilibrating solution have the same conductivity.
b. Amberlite® trademark, manufactured by Rohm and Haas Company
c. Duolite® trademark, manufactured by Diamond Shamrock Chemical Company.
d. Supplied by Bio-Rad Laboratories.
e. Manufactured by Ionac Chemical Company.

to predict the behavior of organic solutes with high molecular weights, multiple functionality, weak dissociation, and poor water solubility. To screen the candidate resins and to gain a better understanding of the problems we might encounter with various classes of organic solutes in the ERID device, we selected several test organic solutes and measured their affinity for some of the more promising candidate resins. We first measured the equilibrium capacity of the resins for some of the solutes; then we measured solute removal in a flow system. Some of the solutes posed special problems that required additional study. These will be discussed at the end of this section.

Materials and Analytical Methods

Chloroform was obtained as an analytical reagent from J.T. Baker Chemical Co. Analysis was by GC (Hewlett Packard 5750 Research Gas Chromatograph) with electron-capture detection. Preliminary samples were determined by direct injection of the aqueous solution. All subsequent samples were analyzed by extraction of the chloroform into organic solvents suitable for electron-capture analysis.

GC conditions for chloroform:

Column:	1.22 m by 6.35 mm stainless steel Porapak Q 190°C
Detector:	Ni 63, electron capture 220°C
Carrier:	Helium, 30 ml/min
Injection port:	210°C
Sample size:	1 µl

The GC response was calibrated by analyzing standard solutions of chloroform under the same conditions used for analysis of the samples.

Bis(2-chloroethyl) ether (boiling range 65-67°C at 2 kPa) was obtained as an analytical reagent from Eastman Organic Chemicals. Analysis was by GC with flame-ionization detection. The aqueous solution was cooled and extracted with diethyl ether (4 to 1). The ether solution was analyzed by direct injection into the GC column. If the solute concentration is low, the ether solution can be concentrated to extend the limit of detection by GC; however, significant losses can occur unless evaporation is carefully controlled.

GC conditions for bis(2-chloroethyl) ether:

Column:	1.22 m by 6.35 mm glass 10% Apiezon L on 60/80 Gas Chrom Q 110°C
Detector:	Flame ionization 190°C
Carrier:	Helium, 30 ml/min
Injection port:	140°C
Sample size:	25 µl

The GC response was calibrated by analyzing standard solutions under the same conditions used for samples.

Since bis(2-chloroethyl) ether is rather volatile, we studied the feasibility of recovering it from large quantities of dilute aqueous solution by sparging with nitrogen. The details of this study are presented in Appendix A. The results indicate that sparging is an efficient method for recovering this solute from dilute solutions.

Diethylnitrosamine (boiling range 63-64°C at 1 kPa) was obtained from Eastman Organic Chemicals. Analysis was by GC with flame-ionization detection. Direct injection of the aqueous solution of the amine produced several peaks which interfered with determination of low levels of the amine. A 10-ml aliquot of the amine solution was extracted with 1 ml of chloroform, and the chloroform extract was analyzed by GC. No interfering peaks were observed when the chloroform solutions were analyzed.

GC conditions for diethylnitrosamine:

Column:	1.22 m by 6.35 mm glass Chromosorb 101 145°C
Detector:	Flame ionization 190°C
Carrier:	Helium, 30 ml/min
Injection port:	140°C
Sample size:	50 µl

The GC response was calibrated by analyzing standards under the same conditions used for the samples.

Dibenzofuran was obtained as a 98% pure compound from Aldrich Chemical Company, Inc. Analysis was by GC with flame-ionization detection. Aqueous solutions of dibenzofuran were extracted with benzene (10 to 1), and the benzene extract was analyzed by gas chromatography. The GC response for dibenzofuran was calibrated by analysis of standard solutions of dibenzofuran in benzene under the same conditions used for the analyses of samples.

GC conditions for dibenzofuran:

Column:	1 m x 4 mm I.D., glass, 3% OV-1 on 80/100 mesh Gas Chrom Q, 120°C
Detector:	Flame ionization, 190°C
Carrier:	Helium
Injection port:	179°C
Sample size:	5 µl

Dimethylnitrosamine was obtained as a ^{14}C-labeled compound from New England Nuclear. The aqueous solution had a specific activity of 5.21 Ci/mol. Concentrations were measured by liquid scintillation counting. Concentrations as low as 1 µg/liter (ppb) were easily measured by this technique.

Reduced Michler's ketone, 4,4'-(methylene-^{14}C) bis [N,N-dimethylaniline], was available within the Institute as a ^{14}C-labeled compound with specific activity of 2.8 Ci/mol. Analysis was by liquid scintillation counting.

DDT, 1,1-bis(p-chlorophenyl)-2,2,2-trichloroethane, was obtained as a ^{14}C-labeled compound from New England Nuclear. The crystalline material had a specific activity of 5.23 Ci/mol. Analysis was by liquid scintillation counting.

A supply of 2,4,6-trimethylaniline was available within the Institute as a ^{14}C-labeled compound with specific activity of 2.7 Ci/mol. Analysis was by liquid scintillation counting.

Cholic acid was obtained as an ^{3}H-labeled compound from New England Nuclear. The ethanol solution had a specific activity of 5.6 Ci/mmol. Analysis was by deep-well scintillation counting.

Humic acid, technical grade, was obtained from Aldrich Chemical Company, Inc. Analysis was by a combination of liquid chromatography and spectrophotometry as described by Mantoura and Riley.[6] Aliquots of humic acid in 0.2 N sodium hydroxide were diluted to one liter with water and adjusted to pH 2.0. An Amberlite XAD-2 column, 5 cm by 6 mm, was pretreated as described in the reference, and the solution was passed through the column at a drip rate of 12 ml/min. The column was back-flushed with 4 ml of 0.2 N sodium hydroxide to elute the humic acid. The eluate was diluted to 6 ml with 0.2 N sodium hydroxide, and the absorbance was measured at 460 nm with water as the reference. Absorbance of standard samples plotted against concentration yielded a straight line.

Equilibrium Sorption of Solutes by Resin

During the early months of the study, we exposed several candidate resins to solutions of five test organic solutes to determine the extent to which the various resins differed in their affinity for the solutes. Standard solutions of each solute were prepared by addition of a weighed amount or measured volume of the solute to distilled water in a volumetric flask. Aliquots of the standard solutions were diluted with distilled water to produce working solutions in the ppm range. Resins were pretreated by alternate rinsing in acid and base. Then weighed samples of resin were placed in 300-ml BOD bottles containing a Teflon® stirring bar. The bottles were filled to capacity with the working solutions, stoppered, and shaken on a horizontal shaker for about 16 hr. A control sample of each working solution was treated in the same manner. After equilibration the solutions were removed and analyzed by the methods described above. Results are shown in Table 2.

The only resins that removed an appreciable amount of chloroform were IRC-84 and IRA-410. Somewhat larger amounts of bis(2-chloroethyl) ether and diethylnitrosamine were removed by all of the resins tested. Affinity for humic acid was measured at pH 2.2 and pH 7.0. The cation-exchange resins appeared to have no affinity for humic acid at either value of pH. However, all of the anion-exchange resins had high affinity for humic acid, and the affinity was greater at low pH. All of the resins had considerable affinity for dibenzofuran. A 10-fold reduction in the amount of resin resulted in a decrease in the degree of removal of dibenzofuran. The proportions of 1 g of resin per 300 ml of solution is close to the proportions expected in the final ERID device.

Of the three cation-exchange resins evaluated, Duolite C-433 appeared to have lowest affinity for organics. Moreover, since its values of conductivity were satisfactory (see Table 1), C-433 appeared to be the best candidate for use in the ERID device, but we had insufficient data for exclusion of

TABLE 2. AFFINITY OF RESINS FOR TEST ORGANIC SOLUTES

	Chloroform	Bis-(2-chloroethyl) ether	Diethyl-nitrosamine	Dibenzofuran		Humic Acid pH 2.2	Humic Acid pH 7
Initial solute concentration, mg/l	1.5	0.91	0.94	1.0	1.0	1.0	1.0
Amount of resin used, g	10	10	10	1	10	4	4
Portion of solute removal by resin, %							
IRC-84	20	24	21	70	>90	0	0
C-433	3	29	14	36	75	*	0
CC	--	--	--	>90	>90	--	--
Stratabed 93	--	--	--	--	--	50	29
ES-340	0	5	11	33	54	82	59
A-30 B	0	14	8	28	--	71	44
A-57	--	24	7	28	67	79	22
Bio-Rex 5	--	--	--	34	67	--	--
IRA-68	--	--	--	20	51	--	--
IRA-410	60	29	15	--	84	97	70
IRA-910	--	--	--	--	--	92	52

* A yellow substance that apparently leached from the resin interferred with analysis.

the CC resin. The data on anion-exchange resins were not sufficient to select the best resin, but some could be eliminated on the basis of data in Tables 1 and 2. IRA-410 had a high affinity for all the test organic solutes, and its conductivity values were only marginally suitable. IRA-910 was eliminated on the basis of its similarity to IRA-410. Stratabed 93 was eliminated on the basis of rather low conductivity in the chloride form. IRA-68, which was not on hand during the first four tests, gave encouraging results with dibenzofuran and was considered a good candidate for further evaluation.

Dynamic Sorption Studies

The experiments described above were useful for screening several resins and test solutes, but they did not represent the flow conditions that would be expected in the ERID process. Therefore, an experimental procedure was devised to expose the resins to flowing solutions of the test solutes. The apparatus consisted of a 1-cm-I.D. chromatographic column with a filter disc and Teflon® stopcock (Ace 5904-T-22) and glass tubing to convey the solution into and out of the column. The column was filled with resin to a height of about 45 cm, and the resin was rinsed with 0.02 N NaCl solution for 8 hr. Then 3.5 liters of 0.02 N NaCl solution spiked with the radiolabeled test organic solute was allowed to flow through the column over a period of about 5 hr. Hourly samples of the effluent and samples of the feed and composite effluent were analyzed by scintillation counting. In some cases the column was extracted with an appropriate solution to recover the test solute from the resins. Results of the dynamic sorption studies are shown in Table 3.

Our early experiments indicated that diethylnitrosamine might be a useful test solute. Since the diethyl form of the compound was not available as a radiolabeled compound, we decided to use dimethylnitrosamine (DMNA) in our studies with dilute solutions. A feed solution containing 12 μg of ^{14}C-labeled DMNA per liter of 0.02 N NaCl was used in dynamic sorption studies with IRA-68, CC, and a 2:1 mixture of IRA-68 and CC resins. The IRA-68 resin alone removed 2.8% of the DMNA, the CC resin removed 0.6%, and the mixture removed 5.5%. Therefore, we would expect only a minor change in the nitrosamine content of tap water treated with the ERID device.

When a solution containing 2 μg/liter of ^{14}C-labeled reduced Michler's ketone was allowed to flow through a column of CC resin, 98% of the radioactivity was removed from the solution. Only 8% of the radioactivity was recovered when the column was rinsed with 1.5 liters of 0.5 N NaOH. In a subsequent experiment, the resin removed 96% of the radioactivity from the feed solution, and 94% of the retained radioactive compound was recovered when the column was rinsed with 3.5 liters

TABLE 3. RESULTS OF DYNAMIC SORPTION STUDIES

Solute	Resin	Solute removed by resin, %	Extractant	Sorbed solute recovered, %
Dimethylnitrosamine	IRA-68	2.8	-	-
"	CC	0.6	-	-
"	IRA-68 & CC	5.5	-	-
Reduced Michler's ketone	CC	98	base	8
"	CC	96	acid	94
"	IRA-68	17	base acid	35 23
2,4,6-trimethylaniline	C-433	8	acid	87
"	IRA-68	0	base	0
DDT	IRA-68 & C-433	75	-	-
"	IRA-68	89	benzene	100
"	C-433	91	benzene	44
Cholic acid	IRA-68	99	base	10
"	C-433	1.4	-	-

of 0.5 N HCl. Apparently the resin had a high affinity for the compound in the free base form, but when the amine groups were protonated with HCl, the resin had a stronger affinity for the hydrogen ions than the reduced Michler's ketone. Therefore, we concluded that this solute, and probably other amines, can be sorbed and desorbed reversibly with the weak-acid cation-exchange resins.

When IRA-68 resin was exposed to the reduced Michler's ketone in the dynamic sorption experiment, 17% of the solute was removed by the resin. About 35% of this was recovered when the column was rinsed with 3.5 liters of 0.5 N NaOH, and another 23% was recovered in a subsequent rinse with 3.5 liters of 0.5 N HCl.

Michler's ketone contains two tertiary amine groups that associate with the carboxylate groups of the weak-acid cation-exchange resins. On the other hand, 2,4,6-trimethylaniline has only one primary amine group which would be expected to associate less strongly with the cation-exchange resins. When ^{14}C-labeled trimethylaniline was exposed to the C-433 weak-acid cation-exchange resin in a dynamic sorption experiment, only 8% of the radioactivity was retained by the resin and 87% of this was recovered by an acid rinse. No measurable loss of radioactivity was detected when the trimethylaniline passed through a column containing IRA-68, and only a minor amount of radioactivity was found when the resin was rinsed with base.

In our first experiments with DDT, a 2:1 mixture of IRA-68 and C-433 exhausted with NaCl removed 75% of the ^{14}C-labeled solute as it passed through the column. When these resins in the regenerated form were exposed separately to the solution of DDT, they removed 89% and 91%, respectively. The resins in the column were rinsed with 100 ml of methanol to remove water, then they were extracted with benzene. Virtually all of the DDT was recovered from the IRA-68, but only 44% was recovered from the C-433.

A column of C-433 resin removed only 1.4% of the ^{3}H-labeled cholic acid from a solution containing 72 ng/liter. However, when a 59-ng/liter solution of cholic acid flowed through a column of IRA-68, 99% was removed, and only 10% could be recovered by rinsing with 3 liters of 0.5 N NaOH solution. Evidently the carboxilic acid group of the cholic acid was strongly bound to the amine groups on the anion-exchange resin.

Additional Studies with Humic Acid

In our initial studies with humic acid we observed some unusual properties that required further study. In preparing standards of humic acid, we found that reproducible results

could not be obtained when individual samples were weighed for calibration or affinity studies. However, reproducible results were obtained when a large sample was weighed and dissolved, and aliquots of the concentrated solution were taken for calibration standards and affinity studies. These results suggest that the supply of humic acid is not homogeneous.

Losses due to adsorption on surfaces could have occurred during transfer or handling of samples. Humic acid was observed to adhere strongly to glass wool, stirring rods, cotton, ground-glass surfaces, and many other surfaces. Therefore, great care must be observed in handling the humic acid solution at the ppm level. On several occasions, what appeared to be a clear, true solution of humic acid in water produced a precipitate on standing, indicating either insolubility or possible reaction. All these factors complicate the handling and analysis of trace levels of humic acid in water.

Since humic acid is extremely complex chemically and its composition varies with source, the affinity of resins for humic acid material could better be defined by fractionation of the humic acid into sub-groups and measurement of the affinity of the resins for each sub-group. The simplest approach appeared to be fractionation based on pH of solution. A few preliminary experiments have been conducted to determine the feasibility of this approach.

In the conduct of the test, it was observed that precipitation did not occur when humic acid, dissolved in 0.2 N NaOH, was neutralized at pH 9. When the pH was adjusted below 3, a slight precipitate formed, and a characteristic sulfide-like odor was detected above the solution.

To prepare a "fraction" of humic acid for affinity studies, a sample of humic acid was stirred with water at pH 3 (H_2SO_4 was used to adjust pH) for several hours. The solution was decanted, and the residue, insoluble at pH 3, was washed and stirred repeatedly with water at pH 3. The remaining solid was equilibrated with water at pH 9 and stirred for several hours. A portion of the solid dissolved. The solution was decanted, evaporated to dryness, and used in subsequent affinity studies as the humic acid fraction soluble in the pH range 3 to 9.

The data in Table 4 were obtained with the fractionated humic acid sample. A 100-ml solution containing 24.2 mg of the fraction of humic acid soluble in the pH range 3 to 9 was prepared, and the pH of this stock solution was adjusted to 7. A 4-ml sample of the stock solution, adjusted to 5 ml with 0.2 N NaOH, had an absorbance of 1.2 on the DU spectrometer at 460 nm. Another 4-ml sample, diluted to one liter to obtain a 1-mg/liter solution of humic acid, was adjusted to pH 2 with

HCl and ionic strength 0.6 N with NaCl and was passed through a column of Amberlite XAD-2 resin. The XAD-2 column was extracted with 4 ml of 0.2 N NaOH, the volume of the eluate was adjusted to 5 ml with 0.2 N NaOH, and the absorbance was found to be 0.815. Evidently, 32% of the humic acid was lost in the process of concentrating the sample from one liter to 5 ml.

TABLE 4. DATA FROM AFFINITY STUDIES WITH HUMIC ACID FRACTION AND CC RESIN

Sample	Absorbance at 460 nm Experiment 1	Experiment 2
Untreated stock solution	1.20	1.22
Stock solution diluted and recovered on XAD-2	0.815	0.940
Distilled water contacted with CC resin	0.018	0.08
Stock diluted, contacted with CC, and recovered on XAD-2	0.905	0.995
4.5 ml of isoamyl alcohol eluate from CC	0.05	-
4.5 ml of H_2O:Methanol:NH_3 eluate from CC	0.04	-
4.5 ml of 0.2 N NaOH eluate from CC	0.02	-

A 15-cm x 8-mm glass tube was packed with 0.5 g of CC resin. A one-liter sample of distilled water was passed through the CC-resin column, adjusted to pH 2 and ionic strength 0.6 N, and passed through the XAD-2 column. The NaOH extract from the XAD-2 column had an absorbance of 0.018 at 460 nm, indicating very little interfering material in the system. A 4-ml sample of the stock solution, diluted to one liter, was passed through the CC-resin column and concentrated to 5 ml on the XAD-2 column. The absorbance was 0.905, somewhat more than the analytical standard, indicating that little if any of the humic acid was removed by the resin. (The experiment described thus far was repeated, and the results shown as Experiment 2 in Table 4 indicate that similar amounts of humic acid were recovered from the columns.)

Studies by other investigators indicated that isoamyl alcohol might be a suitable solvent for removing humic acid from a resin column.[7] The column of CC resin that had been in contact with one liter of 1-ppm humic acid was eluted with 4.5 ml of isoamyl alcohol, the volume of the eluate was adjusted to 5 ml with isoamyl alcohol, and the absorbance of the eluate was found to be 0.05. The CC column was then eluted with 4.5 ml of a 1 M solution of NH_3 in a 1:1 mixture of methanol and water. The absorbance of this eluate was 0.04. Finally, the CC column was eluted with 4.5 ml of 0.2 N NaOH; the absorbance of that eluate was 0.02. The significance of the absorbance values of these eluates is questionable since the values are in the range of those obtained when there was supposedly no humic acid in the system.

As we have discussed previously, a brown material has been observed in the glass-wool plugs that we used to retain the resin beads in the glass tubes. In an experiment to evaluate the ability of glass wool to remove humic acid from solution, the XAD-2 resin in the recovery column was replaced entirely with GC-grade silanized glass wool (Supelco). A 4-ml solution of the stock humic acid fraction was diluted to one liter, adjusted to pH 2.2 with HCl, and adjusted to ionic strength 1.2 with NaCl. Then it was passed through the glass-wool column. The humic acid was eluted from the column with 4 ml of 0.2 N NaOH, the volume was adjusted to 5 ml, and the absorbance was found to be 0.965 compared to 1.23 for a 4-ml sample that had not been subjected to the process of dilution and recovery on glass wool. We conclude from this experiment that glass wool is just as effective as XAD-2 in recovery of humic acid from acidic solution. These results suggest that glass wool might be effective as a prefilter to remove humic acid from tap water before it enters the ERID unit.

When solutions containing humic acid were contacted with candidate resins in our equilibrium sorption studies, we found that humic acid had a low affinity for cation-exchange resins and a high affinity for anion-exchange resins. These results were in agreement with data reported by Bonsack.[8] Moreover, he found that Lewatit MIH, a granular, gel-type, condensation polymer, weak-base, anion-exchange resin absorbed only small amounts of humic acid, most of which could be recovered with aqueous NaOH. To determine whether reversible sorption was obtainable with our resins, we carried out experiments to extract humic acid from IRA-68 anion-exchange resin. A stock solution containing 0.165% of humic acid was prepared by addition of excess dry crude humic acid to tap water. After this mixture equilibrated, the undissolved material was removed by filtration. Standard solutions were prepared by dilution of the stock solution with feed solution (deionized water with

NaCl added to raise the conductivity to 150 μS/cm). The standard solutions were acidified to pH 2.2 and analyzed spectrophotometrically at 350 nm to obtain a calibration curve of UV absorbance versus concentration of humic acid.

Pretreated IRA-68 resin in the regenerated form was placed in a chromatographic column and rinsed with 8 liters of feed solution. A 3.5-liter batch of 66-ppm humic acid solution, prepared by dilution of 140 ml of stock solution with feed solution, was allowed to flow slowly through the column. Samples of the feed, periodic samples of the effluent, and a composite sample of the effluent were acidified to pH 2.2 and analyzed spectrophotometrically. The results are shown in Table 5.

TABLE 5. HUMIC ACID REMOVED BY IRA-68 ANION-EXCHANGE RESIN

Time, hr	Humic Acid Removed, %
1	46
2	41
3	38
4	41
5	36
6	36
0-6 (composite)	44

During the experiment, brown bands of varying intensity were observed on the column of resin. There was a very dark band at the top followed by a lighter band and another dark band in the lower part of the column. Apparently, the soluble fraction of the crude humic acid contained several components.

The column containing the resin loaded with humic acid was rinsed with 3.5 liters of 0.5 N NaOH over a period of 5 hr in an attempt to extract the humic acid. At the end of 5 hr, the effluent appeared to contain little if any humic acid. Spectrophotometric analysis of the composite effluent indicated that 29% of the humic acid had been removed by the NaOH rinse. Subsequent rinsing with 0.5 N NaCl and 0.5 N HCl removed no additional humic acid.

The above experiment confirmed our previous observations concerning the complexity of humic acid. In the material from Aldrich, nearly half of the water-soluble fraction had such a high affinity for IRA-68 that it could not be removed. If we were to use humic acid as a test organic solute in our ERID device, we needed to obtain a fraction that could be reversibly sorbed and desorbed. Therefore, we designed another experimental procedure for fractionating humic acid. To prepare stock solution, humic acid was stirred into 0.01 N NaOH, and HCl was added to adjust the pH to 7. Then the solution was centrifuged, decanted, and filtered to remove undissolved material. The humic acid content of the stock solution was measured gravimetrically, and concentrations of subsequent solutions were measured spectrophotometrically at 350 nm.

A 1.5 x 40-cm chromatographic column was filled with 100 ml of IRA-68 resin in the regenerated form, and 3.5 liters of a solution containing 70 mg/liter of humic acid in deionized water was fed slowly through the column. The first 500 ml of solution from the column was essentially free of humic acid. The effluent contained 42 mg/liter after 1000 ml of flow and 56 mg/liter after 3000 ml. The composite effluent contained 46 mg/liter or 66% of the initial humic acid. The column was rinsed with 3.5 liters of 0.5 N NaOH. After 100 ml had flowed through the column, the humic acid content of the effluent was 134 mg/liter, and it decreased thereafter. The composite effluent contained 18 mg/liter or 64% of the humic acid that had been removed from the original feed solution by the resin.

The solution containing the recovered humic acid was neutralized to pH 7 with HCl and fed through a fresh column of regenerated IRA-68 resin. Essentially all of the humic acid was retained in the column. However, only 61% of the retained humic acid was recovered when the column was rinsed with 3.5 liters of 0.5 N NaOH. Evidently the quaternary-amine functional groups of the resin held the humic acid so tenaceously that it could not be recovered. Although the amount of humic acid present in tap water would probably not be enough to alter the performance of an ERID device, it appeared unlikely that humic acid could be recovered quantitatively once it had been removed from the water by the ERID device.

EXTRACTION OF ORGANICS FROM RESINS

Most ion-exchange resin beads are prepared by a pearl polymerization process in which the monomers and polymerization catalyst are suspended as droplets in an aqueous medium. Impurities such as unreacted monomers, catalysts, and suspension stabilizers may remain within or on the surface of the resin beads, and the routine washing of commercial resins does not remove these organic impurities completely. When we extracted 1-g samples of eight candidate resins with distilled

water and obtained a UV spectrum of the extracts, we found evidence of organic contaminants released from six of the resins, but we had no information about the quantity or identity of the extracted contaminants.

A standard procedure (a modification of the procedure recommended in Duolite® Tech Sheet 105) was developed for pretreating resins to remove organic contaminants:

Step 1. The resin was placed in a beaker and rinsed with deionized water.

Step 2. The water was drained from the resin, and two bed volumes of 1.5 N NaOH were added. After the mixture was stirred for 20 min, the basic solution was drained from the resin, and the resin bed was rinsed with five bed volumes of deionized water.

Step 3. The water was drained from the resin, and two bed volumes of 2 N NCl were added. After the mixture was stirred for 20 min, the acidic solution was drained from the resin, and the resin was rinsed with five bed volumes of deionized water.

Step 4. Steps 2 and 3 were repeated for 5 cycles, and the resin was left in the regenerated form (i.e., Step 2 was the last treatment for anion-exchange resins).

A 50-g sample of each pretreated resin was placed in a 500-ml Erlenmeyer flask and was rinsed 28 times with a full flask of distilled water. (A 50-g batch of resin in an ERID device would contact 14 liters of water in 48 hr.) Then 500 ml of distilled water was added to each flask, and the flasks were shaken for 30 min. The extracting water was decanted from the resin through a glass-fiber filter that had been thoroughly washed with distilled water, and the filtrate was reserved for carbon analysis. The 14-liter rinse followed by the 500-ml extraction was carried out four times. In the fourth extraction the resin was permitted to remain in contact with the water for 48 hr before filtration. The extracts were placed in clean glass-stoppered bottles and delivered to the Environmental Research Laboratory of the Environmental Protection Agency, Athens, Georgia, where they were analyzed for total carbon and inorganic carbon. Organic carbon was determined by difference. Analyses were performed with a Beckman Model 915 Total Organic Carbon Analyzer, to which a Model 215B infrared detector had been added to permit simultaneous determination of total and inorganic carbon.

The results of the carbon analyses are shown in Table 6. The first extract from each resin contained a considerable amount of organic carbon, second and third extracts had progressively smaller amounts, and the fourth extract which had been in contact with the resin for 48 hr contained more organic carbon. The IRC-84 resin contained the largest amount of extractable organic material. Although extensive rinsing considerably reduced the organic content of the extracts, the high level in the 48-hr extract indicated ineffectiveness of rinsing as a technique for cleaning the IRC-84 resin. The other resins showed only moderate increases in the organic content of the 48-hr extract.

A high concentration of inorganic carbon was found in the first extract of the cation-exchange resins. The low levels in the blanks indicated that the inorganic carbon did not come from the distilled water. Evidently, a considerable amount of CO_2 was released by the resins, possibly as a result of decomposition of carboxylate groups. However, the low level of inorganic carbon in the 48-hr extracts suggests that further decomposition of carboxylate groups did not occur during the experiment. The very low level of inorganic carbon in the extracts from the anion-exchange resins is explainable. Since the anion-exchange resins in their regenerated form have a high capacity for bicarbonate ions, the dissolved CO_2 in the distilled water was readily removed by ion exchange.

Several conclusions can be drawn from this experiment. First, since IRC-84 released considerably more organic material than the other two weak-acid cation-exchange resins, it should be eliminated as a prime candidate for use in ERID. Second, the standard procedure of cycling resins between acid and base is inadequate as a pretreatment for removal of organic contaminants from resins used in ERID devices. This pretreatment probably removes a large fraction of the total extractable organic material from the resins, but the removal is not complete. Third, rinsing with large quantities of distilled water would probably remove most of the extractable organic material from the resins, but the amount of water required would appear to make the treatment impractical.

Since the standard resin pretreatment techniques were inadequate, we developed and evaluated the following procedure for serial rinsing of resins with organic solvents after the usual pretreatment with acid and base:

Step 1. The resin was placed in a chromatography column, washed with distilled water, and drained.

TABLE 6. CARBON ANALYSES OF EXTRACTS FROM ION-EXCHANGER RESINS

Resin Designation	Extraction Number	Total Carbon, mg/l	Inorganic Carbon, mg/l	Organic Carbon, mg/l	Corrected Organic Carbon, mg/l
CC	1	250	210	40	37
CC	2	14	5.0	9.0	5.6
CC	3	11	3.9	7.1	3.7
CC	4	20	7.5	12.5	8.3
C-433	1	270	160	110	107
C-433	2	13	5.9	7.1	3.7
C-433	3	8.9	4.2	4.7	1.3
C-433	4	20	8.6	11.4	7.2
IRC-84	1	930	67	863	860
IRC-84	2	27	5.0	22	18.6
IRC-84	3	14	4.0	10	6.6
IRC-84	4	167	6.3	161	157
ES-340	1	350	0.3	350	347
ES-340	2	13	0.3	12.7	9.3
ES-340	3	5.0	0.3	4.7	1.3
ES-340	4	14	0.3	13.7	9.5
A30-B	1	154	0.3	154	151
A30-B	2	5.9	0.2	5.7	2.3
A30-B	3	4.8	0.2	4.6	1.2
A30-B	4	11	0.3	10.7	6.5
IRA-68	1	260	0.3	260	257
IRA-68	2	4.3	0.1	4.2	0.8
IRA-68	3	3.3	0.3	3.0	-0.4
IRA-68	4	8.0	0.3	7.7	3.5
Blank	1-3	6.3	2.9	3.4	0
Blank	4	7.2	3.0	4.2	0

Step 2. Two bed volumes of 1.5 N NaOH (2 N HCl for cation) were allowed to flow through the column at a rate that provided 10 min of contact.

Step 3. The resin bed was drained and rinsed with 5 bed volumes of distilled water.

Step 4. Two bed volumes of 2 N HCl (1.5 N NaOH for cation) were introduced with 10 min of contact.

Step 5. The resin bed was drained and rinsed with 5 bed volumes of distilled water with 30 min of contact.

Step 6. Steps 2 through 5 were repeated for a total of 5 cycles, and the resins were retained in their exhausted form for further processing.

Step 7. The resin was then rinsed sequentially with two bed volumes of methanol, diethyl ether, and acetonitrile, each with a residence time of 20 min. Finally, the resins were rinsed again with 5 bed volumes of distilled water.

The wet resins were placed in an oven and dried at 60°C overnight. Each resin was then held under vacuum overnight without heating. Then 50-g samples were placed in a chromatography column and extracted with distilled water. The extraction procedure and sequence of sampling were as follows:

In an initial wash cycle, 5 liters of distilled water flowed through the column over 60 min. The first sample was taken at the beginning of the 5-liter wash cycle. The column was then filled and allowed to stand for 30 min. A second sample was taken, and the resins were washed with another 5 liters of distilled water. The column was refilled, and a third sample was taken after a 30-min waiting period. Finally, 30 ml of resin was placed in the 60-ml sample bottle, and the bottle was filled with distilled water and stoppered. The water remained in contact with the resin for about four days while the sample was transported to the EPA laboratory in Athens, Georgia for TOC analysis.

The results of the carbon analyses of these aqueous extracts are shown in Table 7. The blanks were samples of the distilled water we used for the extractions, and they were inserted in the order they were taken during the experiment. We used a new batch of distilled water near the end of the experiment beginning with Blank Sample G. In every case the larger value of TOC in the fourth extract than in the third indicated that either the 30-min waiting period was insufficient for full

TABLE 7. ORGANIC CARBON CONTENT OF AQUEOUS EXTRACTS FROM RESINS WASHED WITH ORGANIC SOLVENTS

Resin	Sample	Total Carbon, mg/l	Inorganic Carbon, mg/l	Organic Carbon, mg/l
Blank	A	1.5	0.2	1.3
	B	1.5	0.2	1.3
IRA-68	1	8.3	0.2	8.1
	2	2.2	0.3	1.9
	3	1.7	0.3	1.4
	4	3.7	0.4	3.3
CC	1	12.4	0.3	12.1
	2	3.3	0.3	3.0
	3	3.9	0.2	3.7
	4	34.0	0.4	33.6
Blank	C	1.5	0.4	1.1
	D	1.6	0.3	1.3
C-433	1	1.7	0.2	1.5
	2	4.5	0.4	4.1
	3	2.8	0.4	2.4
	4	9.6	1.0	8.6
ES-340	1	5.1	0.1	5.0
	2	3.9	0.1	3.8
	3	2.0	0.1	1.9
	4	2.6	0.2	2.4
Blank	E	1.4	0.1	1.3
	F	1.3	0.2	1.1
Blank	G	1.8	0.4	1.4
	H	2.0	0.5	1.5
A-30B	1	8.2	0.3	7.9
	2	5.0	0.4	4.6
	3	3.1	0.4	2.7
	4	4.3	0.6	3.7
Blank	I	1.8	0.5	1.3
	J	1.5	0.4	1.1

equilibration or some decomposition occurred during the 4-day storage. The highest levels of organic carbon were found in the extracts from Ionac CC resin. This was unexpected because CC was the cleanest resin in the experiment reported in Table 6. The results with Duolite C-433 were about the same as before. All of the anion-exchange resins released smaller amounts of organic carbon than we measured in the previous study. Therefore, we concluded that leaching with the organic solvents followed by rinsing with 10 liters of water cleaned the anion-exchange resins more effectively than batch rinsing with 56 liters of water. The sequential rinsing procedure described above became our standard procedure for pretreating resins for use in the ERID device.

SELECTION OF BEST RESINS FOR ERID

The conductivity data in Table 1, the data on affinity of resins for test organic solutes in Tables 2 and 3, and the data on extraction of resins in Tables 6 and 7 were all considered in our selection of the best resins for ERID. The acrylic cation-exchange resins had the highest conductivities in the sodium form, so we carried out further evaluations with IRC-84, CC, and C-433. IRC-84 was eliminated on the basis of the first extraction study, because it released considerable organic material after extensive washing with water. The CC resin was eliminated on the basis of high organic content of aqueous extracts after the resin had been subjected to sequential washing with organic solvents. However, the results of this single test should not discourage further evaluation of the CC resin. All of the other tests indicated that CC was an excellent candidate, and indeed may be the best candidate if a suitable technique were developed for removing organic contaminants. Duolite C-433 was selected as the resin that would be used in the final prototype device because it had good conductivity properties, released the smallest amounts of organic contaminants, and had lower affinity for test organic solute than the other two candidates.

The intermediate-base anion-exchange resins had electrical-conductivity properties that made them appear most suitable for electro-regeneration. These were avilable in bead and granular forms with gel or macroporous matrixes. The macroporous matrix was eliminated because it was considered more likely to adsorb organic solutes. Granular resins tended to release debris. Therefore, gel beads were considered the best resin form. Acrylic anion-exchange resins were particularly appealing because they had the same matrix as the cation-exchange resins, but they were obtained after most of the studies with test organic solutes had been completed. The extraction studies indicated that ES-340, A-30B, and IRA-68 were relatively free of organic contaminants. Of these IRA-68 was selected for use in the prototype device because of its acrylic matrix.

SECTION V

DESIGN AND EVALUATION OF ERID DEVICES

DESIGN CONSIDERATIONS

The overall system for recovery of organic solutes must have the capacity for treatment of 1514 to 1893 liters (400 to 500 gal) of water in a 48-hr period. Therefore, we selected a design capacity of 600 ml/min (228 gal/day) as the basis for the development of a prototype device. Since ERID is capable of removing electrolytes from rather dilute solutions, we chose to use ERID as a pretreatment for reverse osmosis. The alternative would be to continuously demineralize the recirculating reject solution during the reverse osmosis treatment. We set a goal of at least 90% demineralization of tap water in a single pass through the ERID device. Our previous studies demonstrated that more than 99% of the electrolyte content of the feed water could be removed with low throughput rates; however, larger amounts of the organic solutes would likely be removed under such conditions.

In the Introduction, the principles of ERID were explained in Figure 1. In that figure there is a single resin bed and a single product stream, and the only waste streams are the anolyte and catholyte. It is advantageous, but not essential, that there be multiple resin beds between a pair of electrodes. With multiple resin beds, the dimensions of expensive electrode materials can be reduced, the ERID device can be more compact, and a smaller amount of electric current is consumed. It is important that there be no mixing of the product and waste streams.

A recent analysis of tap water in Birmingham, Alabama, showed that it contained 168 mg/liter of total dissolved solids, 22 mg/liter of calcium, 4 mg/liter of magnesium, 9 mg/liter of sodium, 36 mg/liter of sulfate, 68 mg/liter of bicarbonate, and only 1 mg/liter of chloride. Since the solubility of calcium sulfate is 2 g/liter, a 5- to 10-fold increase in its concentration in the waste stream would not be expected to cause precipitation unless stagnation occurs at some point in the waste compartments. Therefore, we attempted to maintain a waste flow rate of about 60 to 120 ml/min or 10 to 20% of the product flow rate. The solubility of calcium carbonate

is only about 15 mg/liter, and this salt could easily precipitate in the ERID device if a high pH exists. Fortunately, calcium carbonate is soluble in acid, so precipitation could be prevented by acidification of the solutions that flow into the rinse compartments, especially the cathode compartment.

Weak-acid and weak-base resins do not have sufficient salt-splitting capacity to demineralize water unless they are intimately mixed. If the two types of resin become stratified, the demineralization performance is greatly reduced. Performance also deteriorates if channels develop in the resin bed which allow uneven distribution of flow through the device. In conventional ion-exchange processes, channeling and separation of resins can be avoided by downward flow of water through a mixed ion-exchange bed. However, entrapment of air in the resin bed is a serious problem in ERID devices because air spaces between resin beds offer extremely high resistance to electric current. Therefore, upward flow through the resin beds is highly advantageous.

CANDIDATE DESIGN CONFIGURATIONS

All of the ERID devices evaluated in the early stages of our research program had been designed and constructed for previous sponsors. The ERID devices used in most of our laboratory experiments were of the plate-and-frame design shown in Figure 2. They contained multiple resin beds with each repeating unit consisting of a cation-exchange membrane, a resin compartment, an anion-exchange membrane, and a rinse compartment comprising a piece of Vexar® netting with a silicone-rubber gasket cast into its perimeter. The arrangement of the internal components of the plate-and-frame ERID device is illustrated in Figure 2.

The end plates served as clamping devices and connection points for solution manifolds. Holes in the membranes and compartments were aligned to form solution manifolds when the unit was clamped together. One of the end plates had the stainless-steel cathode attached to its inside surface. The platinized-titanium anode was attached to the other end plate.

Use of the plate-and-frame design allowed considerable latitude in design parameters. Although the cross-sectional area of the resin beds was essentially fixed when the dimensions of the electrodes were selected, the thickness of the resin beds and the number of resin compartments were still variables that could be increased to increase the capacity of the ERID device. The plate-and-frame device could be made entirely of commercially available materials. Moreover, the device could be easily disassembled for inspection, and individual components could be replaced if necessary before reassembly.

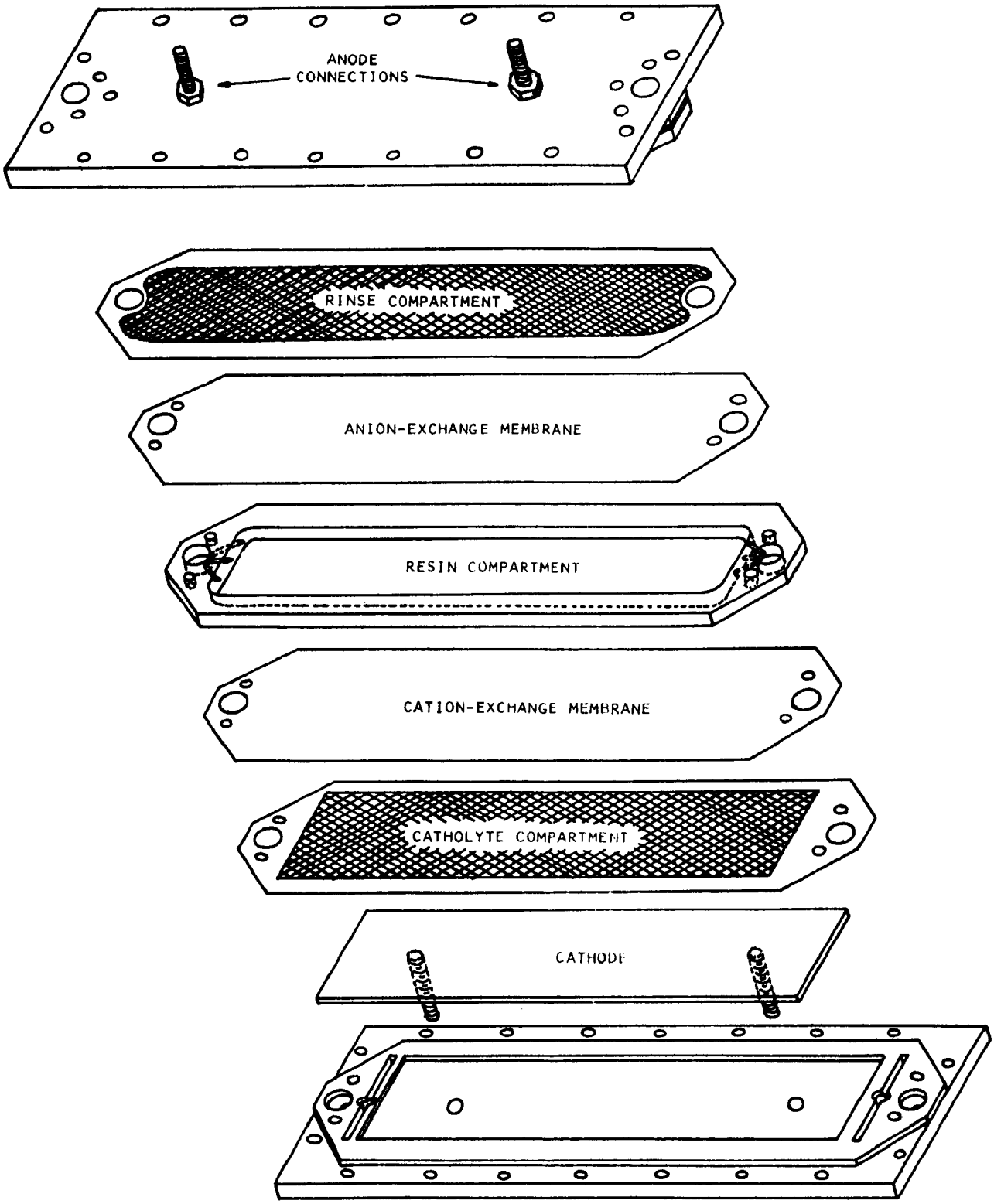

Figure 2. Exploded view of plate-and-frame ERID device

There were two major disadvantages to the plate-and-frame design. First, although the components were flat, some of the materials were not sufficiently resilient to form a water-tight seal at their contact surfaces. Although seepage of water to the outside did not pose any real threat of contamination of the product, it was nevertheless a nuisance. Second, maintaining and assuring equal flow to several compartments in parallel was a source of difficulty. Misalignment of the components or accumulation of debris, precipitate, or gases in one compartment could cause that compartment to receive less than its full share of solution flow. Reduced flow in a resin bed could cause a buildup of electrical resistance and some decrease in demineralization performance, while reduced flow in a waste compartment could result in precipitation of calcium salts.

The cylindrical ERID device shown in Figure 3 was designed to be operated at high pressures. The major structural component was a 2-in. Schedule-40 pipe that served as the container and the cathode. The cation-exchange membrane was tubular Nafion® (DuPont), and the anion-exchange membrane was made by gluing a strip of Ionac MA-3475R membrane in barber-pole fashion with Pliobond® (Goodyear). This fabrication was necessary because tubular anion-exchange membranes are not available commercially. The anode was a 1.25-cm O.D. titanium tube coated with a thin layer of platinum. The small diameter of the anode was advantageous because platinized titanium is much more expensive than stainless steel. As a single-resin-bed device, the cylindrical ERID device was simple and compact. However, it lacked the versatility of the plate-and-frame design because all of the dimensions were fixed by the dimensions of the electrodes.

The fiber ERID device shown in Figure 4 was designed for a commercial sponsor. It could be used with single or multiple demineralization compartments connected hydraulically in parallel and electrically in series. The ion-exchange fibers were cotton yarn coated with crosslinked polyelectrolytes. This device contained no ion-exchange beads or membranes. The ions removed from the feed solution traveled along the ion-exchange fibers and were discharged into the waste compartments.

Early in our research program we began conducting experiments with ERID devices to evaluate their demineralization performance with various combinations of resins and membranes and to determine suitable operating conditions for demineralization of drinking water. The experiments with ERID devices were carried out concurrently with those described in Section IV of this report. Therefore, some of the resins that were eventually eliminated from further consideration in that study were considered viable candidates when they were evaluated in the ERID devices.

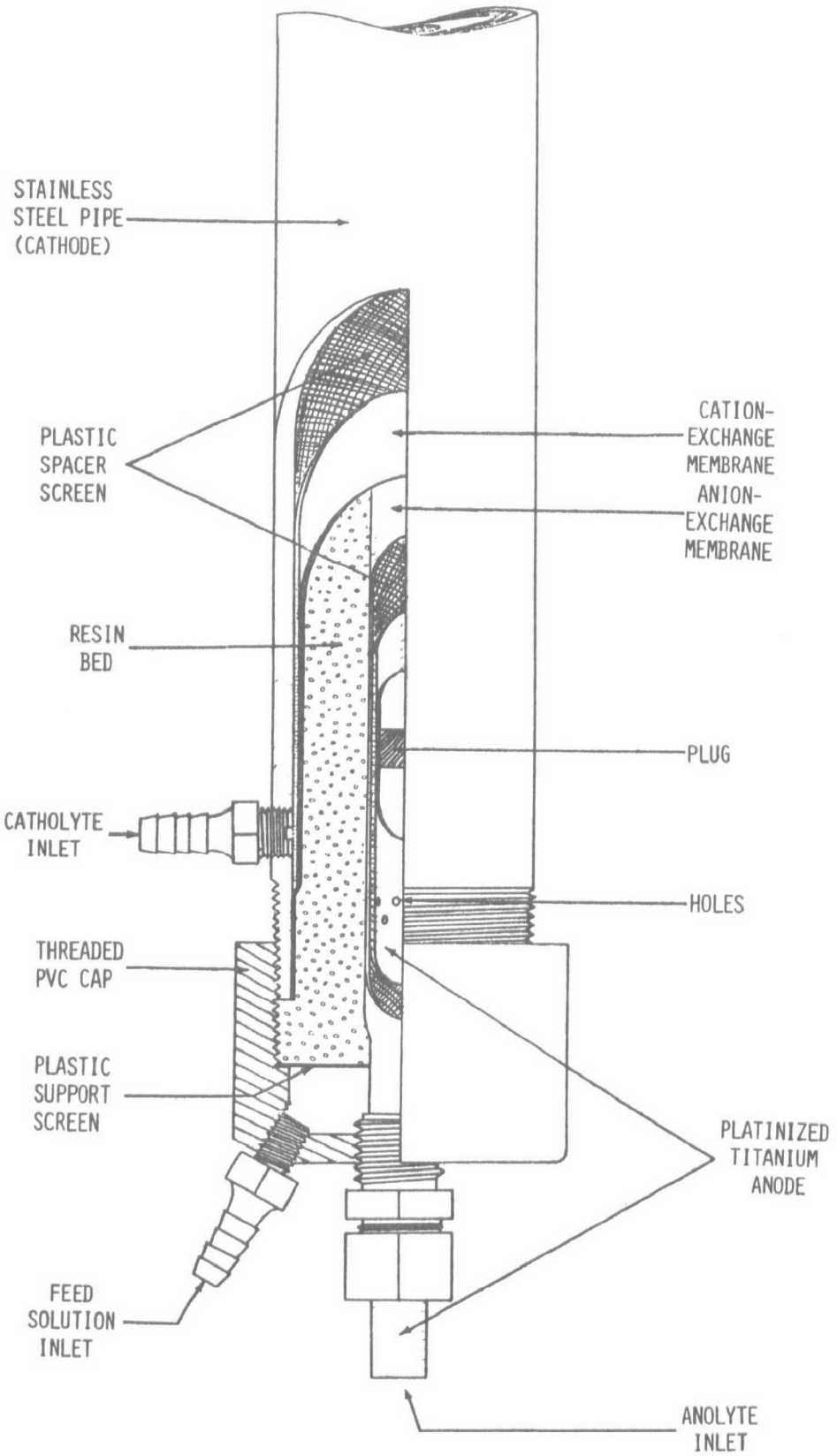

Figure 3. Cylindrical ERID device

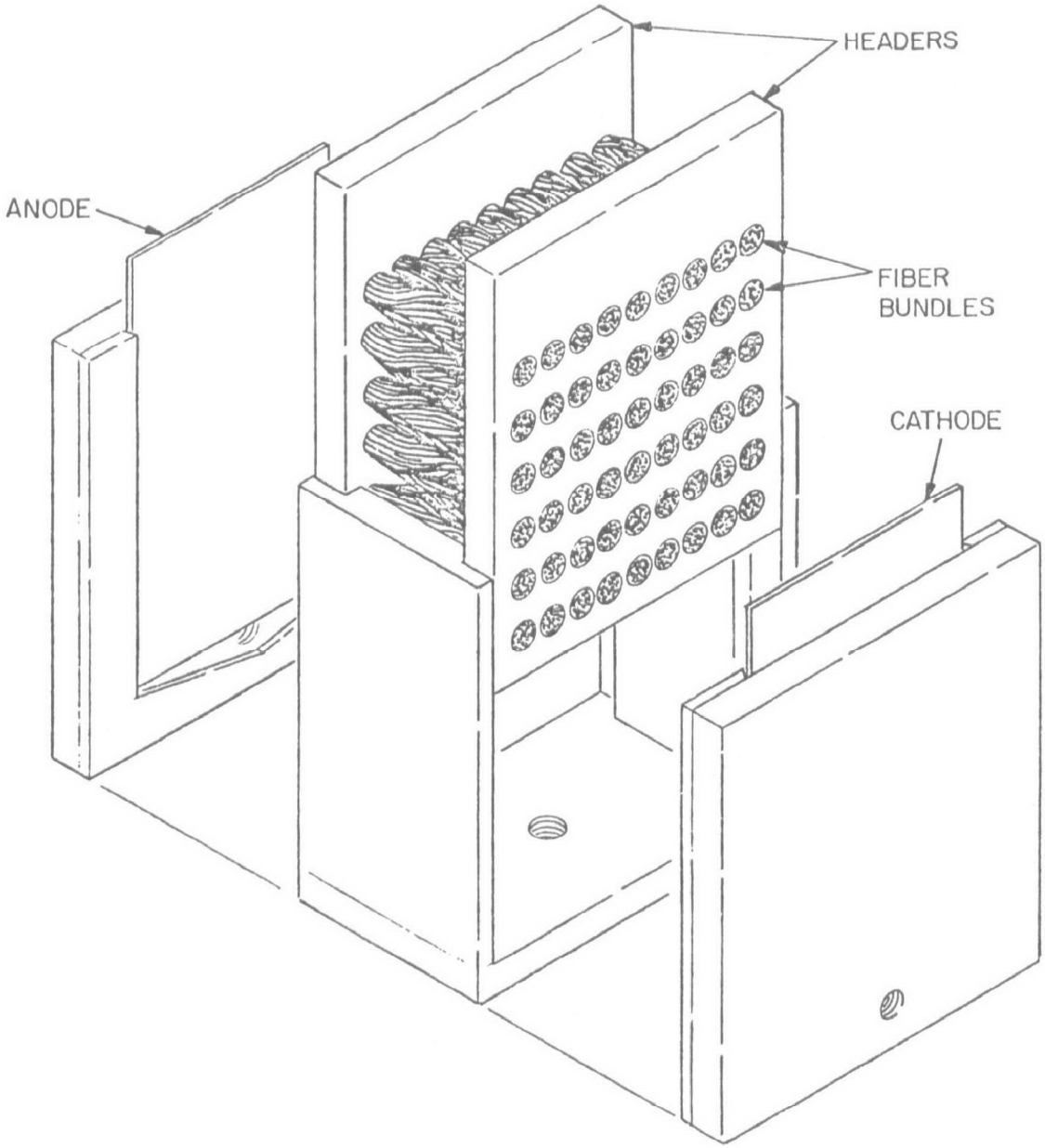

Figure 4. Fiber ERID device

EVALUATION OF EXPERIMENTAL ERID DEVICES

For long-term unattended evaluation of ERID devices, it is necessary to have an adequate supply of feed water of the desired composition, a controlled power supply, and a method of monitoring and recording operating conditions. The power supply consisted of an autotransformer to control applied voltage, an incandescent light bulb to limit the current, an isolation transformer to protect the operator from electrical shock, a rectifier bridge to convert the AC to DC, a volt meter, and an ammeter. A voltage divider and a shunt provided millivolt signals of voltage and current for the 12-point recorder. The conductivities of the various solution streams were monitored by conductivity cells connected through a commutator in the recorder to a single conductivity monitor. The pH of the product stream was also monitored and recorded.

Feed solutions for our initial studies were prepared by addition of NaCl to deionized water in a 1893-liter (500-gal) polyethylene tank. Unless otherwise noted, the feed conductivity was about 150 μS/cm. Product water from the ERID devices was discharged into an identical tank for subsequent use in feed solutions. Feed water was pumped from the tank to a constant-head, overflow standpipe with a mROY® controlled-volume pump Model R132A (Milton Roy). The conduits were Type-316 stainless steel or Teflon. The feed water flowed through an activated-carbon cartridge followed by a particulate filter when test organic solutes were not in the feed water.

Two plate-and-frame ERID devices were used in the laboratory evaluations. They differed only in the materials of which the end plates were constructed -- Micarta® (Westinghouse) and Plexiglas® (Rohm and Haas) -- and the external manifolding for solution flow. The membranes, spacers, and resin compartments were interchangeable. Usually both of these devices were operated with the same feed solution but with different combinations of resins and membranes. Since differences in their designs had no effect on their demineralization performance, no distinction will be made in the discussions that follow.

Ion-exchange membranes from a variety of sources were evaluated in the plate-and-frame device to determine which was most suitable for this particular application. However, we were also looking for an anion-exchange material that could be manufactured in tubular form. Since RAI Research Corporation had expressed a willingness to fabricate tubular membranes, we evaluated two of their fluorocarbon-base membranes in sheet form. To obtain a basis for comparison with unknown membranes and resins, we assembled a two-bed ERID device with proven materials: Ionac MC-3470 cation-exchange membranes, Ionac MA-3475R anion-exchange membranes, and an equal-volume mixture

of ES-340 and IRC-84. When the anion-exchange membranes were replaced with JL200 membranes from RAI, the electrical resistance of the ERID device increased considerably, and the demineralization performance was reduced. Thus, JL200 was not suitable for use in the ERID device. An Ionac MA-3148 membrane evaluated the same way showed low electrical resistance but poor demineralization performance.

The RAI Perimion® 4025 membrane proved to be a suitable replacement for the Ionac MA-3475R anion-exchange membrane. There was no measurable difference in the demineralization performance and electrical resistance when these membranes were interchanged. An ERID device containing Ionac MC-3470 and Permion® 4075 membranes and a mixture of 3 parts of IRA-68 to 2 parts of CC resins was operated for 38 days with NaCl feed solution. During most of this period at least 90% demineralization was achieved with an average product flow rate of about 60 ml/min in each of the three resin compartments. However, during shutdown for holidays, a tear developed in one of the Permion membranes, apparently due to shrinkage when the membranes became partially dry during shutdown. Although the Permion 4025 and Ionac MA-3475R membranes appeared to be comparable in their ion-transport properties, the Ionac membrane had superior mechanical strength and was, in fact, the most durable anion-exchange membrane we evaluated.

Neosepta® AV-4T anion-exchange and CL-2.5 T cation-exchange membranes from Tokuyama Soda Company Ltd. were evaluated in an ERID device with two compartments filled with a mixture of 3 parts of IRA-68 and 2 parts of CC resins. The performance of this device was excellent. We achieved 96% demineralization with a flow rate of 65 ml/min through each compartment and 99% demineralization with a flow rate of 30 ml/min; the coulomb efficiency, equivalents of salt removed per faraday of current, was about 50%. The Neosepta membranes were considered good candidates for use in ERID, but their mechanical strength was not as good as the Ionac membranes.

In addition to the weak-acid cation-exchange resins mentioned above (i.e., Amberlite IRC-84 and Ionac CC), we also evaluated Duolite C-433. The C-433 resin was not used in an ERID device until our leaching studies revealed that the other two resins released excessive amounts of organic solutes. We carried out extensive evaluations of C-433 in the final prototype device and found that the demineralization performance of C-433 was comparable to that of IRC-84 and CC.

Both the 1:1 mixture of ES-340 and IRC-84 and the 3:2 mixture of IRA-68 and CC produced water that was slightly acidic. The appearance of excess hydrogen ions in the product suggested that the cation-exchange resins were more effective than the

anion-exchange resins in removing ions from the water. The closeness of the equiconductance points (see Table 1) of IRA-68 and CC in the chloride and sodium forms, respectively, suggests that a 1:1 ratio should be optimal. But, we found that a 2:1 ratio was needed to achieve a neutral pH in the product. We concluded that something other than the conductivity of the resins affects the pH of the product, and we suspected that dissolved carbon dioxide from the air may contribute to the problem.

The importance of swelling of resins was observed when a resin bed containing a 1:1 mixture of ES-340 and IRC-84 was partially occluded by a microbial colony that restricted the flow of the solutions through the compartments. When the voltage applied to the electrodes was lowered, the flow rate and conductivity of the product decreased, and the coulomb efficiency increased. When the voltage was raised, the reverse occurred. Evidently the lower voltage allowed a larger portion of the IRC-84 resin to be converted to the more highly swollen sodium form, and the swelling further restricted the flow of solution through the resin bed. A low-swelling resin such as CC would have been beneficial in this situation. The CC resin swells only 27% on full conversion from the hydrogen to the sodium form; whereas, IRC-84 swells 65%, and C-433 swells 90%.

The most severe problem encountered in the operation of the plate-and-frame ERID devices was the gradual accumulation of a microbial slime in the bottom of the resin beds. Although the slime probably had some detrimental effect on the electrical conductivity of the resin beads, its major effect was to reduce the hydraulic permeability of the resin beds. In our previous studies we found that the slime could be controlled by periodic rinsing of the system with Clorox® or formaldehyde. Such a treatment was more effective in prevention of the slime than in removal after it had accumulated. Moreover, these treatments would not be suitable for routine use in the proposed application of ERID, because formaldehyde would contribute to the organic content of the water, and Clorox may change the chemical composition of the organic solutes. We found that adequate flow rates could be restored if the ERID device were simply inverted, and all of the inlet and outlet connections were switched. Although this procedure did not completely rid the device of the microbial colonies, it did allow continued operation until thorough cleaning could be accomplished. Approximately 4 hr were required to restore steady-state operation after the ERID device had been inverted.

The normal operating mode of the plate-and-frame ERID device was constant upward flow through all compartments in parallel with constant electrical current flow through all of the compartments in series. While the device was assembled

with Neosepta membranes and a 3:2 mixture of IRA-68 and CC resins, we carried out an experiment to determine its performance with solution flowing through the two resin beds in series rather than parallel. This change resulted in a slight reduction in coulomb efficiency, a slight increase in the conductivity, and a significant increase in the hydraulic pressure drop through the device. Although the results demonstrated that series flow through the resin beds was feasible, there appeared to be no advantages to such an arrangement. If longer residence time were needed, it could be achieved more efficiently with longer or thicker resin beds or with lower flow rates.

To study the effect of increasing the thickness of the resin beds, we constructed two resin compartments of 19-mm (0.25-in.)-thick Plexiglas and filled them with a 3:2 mixture of IRA-68 and CC resins. This assembly contained two pairs of Ionac MC-3470 and MA-3475 membranes. With a product flow rate of 239 ml/min, the degree of demineralization was 91% with 340 mA of electric current and an applied potential of 48 V. To increase the thickness of the resin compartment further, we removed the center waste compartment and its associated pair of ion-exchange membranes. This 38-mm-thick resin bed gave virtually the same demineralization performance as the two 1.9-cm-thick resin beds, but it required 545 mA of electric current. The major advantage to thick resin compartments is that fewer membranes are needed for a given throughput capacity. The disadvantages arise from the increased current densities that are required when fewer membranes are used. For example, when eight 6.35-mm-thick resin beds were used to treat a total of 240 ml/min flow, the current was only 100 mA and over 98% demineralization was achieved. Therefore, thin resin beds were considered more applicable to an ERID device operating in the steady-state mode.

Thick resin beds were considered to have potential advantages in a cyclically operated ERID device in which the total ion-exchange capacity could be more important than the rate of regeneration. The 38-mm-thick resin bed was used in an experiment to evaluate the cyclic mode of operation. The ERID device was operated with a low feed rate and a high applied voltage to regenerate the resins as much as possible. Then the power supply was turned off, and the product flow rate was maintained at 170 ml/min for 30 hr. During this period, 306 liters of water with initial conductivity of 150 μS/cm flowed through the resin bed, and the conductivity of the product increased steadily from 1.5 to 90 μS/cm. This device contained about 75% of the volume of resin used in the final prototype device, but after treatment of less than 20% of the desired amount of feed solution, the conductivity of the product was far above the acceptable level. Therefore, cyclic operation of ERID did not appear appropriate for this application.

The cylindrical ERID device shown in Figure 3 had been constructed during a previous research program about four years prior to the present study, and it has been stored under dry conditions during the interim. On inspection its membranes appeared to be intact. It was filled with a 1:1 mixture of ES-340 and IRC-84 and operated with a feed solution of NaCl in deionized water. Less than 70% demineralization could be obtained, and we found evidence of intercompartmental leakage. The device was disassembled, leaks in the anion-exchange membrane were sealed with Silastic® (Dow Corning) RTV 731, and a ribbon spring from a mechanical timer was used to hold the cation-exchange membrane against the stainless-steel pipe. The device was filled with a 1:1 mixture of IRA-68 and IRC-84 resins and operated with the same feed solution. Initially, 90% demineralization was obtained with a flow rate of 60 ml/min, but leaks developed again. In the next assembly the timer spring was replaced with a Type-301 stainless-steel spring, and a new tubular anion-exchange membrane was installed.

Arrangements were made with RAI Research Corporation to produce Permion 4025 anion-exchange membranes in tubular form for the cylindrical device. Because of delays in procurement of suitable Teflon tubing and difficulties in maintaining dimensional stability, a suitable Permion tubular membrane was never received. A parallel effort to prepare tubular anion-exchange membranes was carried out in our laboratory. In another research project we had prepared a durable anion-exchange membrane by first soaking a fabric in a mixture of polyethyleneimine and epoxy resin and then curing the material in an oven. To prepare a tubular anion-exchange membrane to fit the cylindrical ERID unit, a 16-mm-diameter knitted polyester tube (Meadox Medicals) was soaked in a mixture of 3 parts of PEI 18 (polyethyleneimine from Dow Chemical Co.) and 2 parts of EPON® 828 (diglycidyl ether of bisphenol A from Shell Chemical Co.) and was slipped over a 16-mm-diameter Teflon rod. The material was cured overnight in a 60°C oven. Then the membrane was soaked in water, removed from the rod, and installed over a 0.58 mm Vexar spacer on the anode of the cylindrical ERID device.

The cylindrical device with the new membrane and retainer springs was filled with a 3:2 mixture of IRA-68 and CC and was evaluated with NaCl feed solution. The best performance achieved was 97% demineralization at a product flow rate of 33 ml/min. Higher flow caused considerable reduction in the degree of demineralization. The presence of bubbles of hydrogen gas in the product water revealed that intercompartmental leakage still existed. The volume of resin in the cylindrical device was about 800 ml compared to about 280 ml in one 6.35-mm-thick resin bed in the plate-and-frame device, and one compartment in the plate-and-frame device could demineralize the water at the rate of 60 ml/min compared to 33 ml/min for the

cylindrical device. It became apparent that the plate-and-frame configuration was superior to the cylindrical configuration, and further developments of the cylindrical device were abandoned.

The fiber ERID device that was evaluated initially had been assembled a year before and stored dry. The ion-exchange fibers were cotton crochet yarn coated with a crosslinked polyelectrolyte: PEI 18 cured with dibromopropane for the anion-exchange fibers and Acrysol® A5 (polyacrylic acid from Rohm and Haas Co.) cured with hexanediamine for the cation-exchange fibers. With this device we obtained 90% demineralization of NaCl solution with a flow rate of 11 ml/min.

The dimensions of the experimental ERID devices and operating data from the two best experiments with each are presented in Table 8. The best results were obtained with the plate-and-frame device that contained four 6.35-mm-thick resin beds with a 2:1 mixture of IRA-68 and CC. The throughput rate of 289 ml/min was almost half of the design flow rate for the prototype device, and the degree of demineralization was well above our objective of 90%. The residence time was shortest in this device; therefore, the extent of removal of organic solutes should be lowest in the plate-and-frame device.

DESIGN OF FULL-SIZE PROTOTYPE ERID DEVICE

The results of our studies with the three experimental ERID devices indicated that the plate-and-frame configuration should be used for the full-size prototype. Moreover, since the dimensions of the resin compartments that had been used in the experimental plate-and-frame ERID device appeared to be suitable and convenient, those dimensions were chosen for the prototype.

Teflon was selected as the material of construction for the resin compartments because it is inert to attack by most solvents, it is a very durable material, and it is easy to machine. A one-dimensional view of the resin compartment is shown in Figure 5. A 610 x 127 x 6.35-mm (24 x 5 x 0.25-in.) piece of Teflon is used for each compartment. A 508 x 89-mm opening is cut in the center, triangular portions are cut from the corners to accommodate the clamping bolts, and several holes are drilled in each end to allow passage of solutions through the compartments. The 12.7-mm hole in each end is connected to the opening in the center by 6.35-mm holes drilled in the plane of the Teflon sheet. This manifold system allows passage of water into and out of the resin beds. The two 6.35-mm holes in each end allow access to the gasket spacers that form the enriching compartments.

TABLE 8. COMPARATIVE DATA FROM ERID DEVICES WITH NaCl FEED SOLUTION

	Plate-and frame		Cylindrical		Fiber	
Resin compartments						
Number	4	1	1	1	1	1
Thickness, mm	6.35	38	17.5	17.5	51	51
Length, mm	483	483	510	510	105	105
Width, mm	89	89	444[a]	444	105	105
Anion-exchange resin	IRA-68	IRA-68	IRA-68	IRA-68	PEI & EPON	
Cation-exchange resin	CC	CC	CC	CC	Acrysol A-5	
Resin ratio, A:C	2:1	3:2	3:2	3:2	2:1	2:1
Void volume, ml	400	600	280[b]	280[b]	380	380
Operating data						
Product flow, ml/min	289	260	33	46	19	50
Waste flow, ml/min	29	29	15	15	12	10
Feed cond., μS/cm	150	145	162	160	145	155
Prod cond., μS/cm	3	16	4	14	2	12
Applied potential, V	40	44	22	20	16	22
Current, mA	230	545	200	215	41	93
Calculated results						
Demineralization, %	98	89	97	91	99	92
Coulomb efficiency[c], %	62	83	35	42	89	98
Residence time, min	1.38	2.3	8.5	6.1	20.0	7.6
Current flux, mA/cm^2	0.52	1.24	0.45[a]	0.48	1.06[d]	2.42

a. Based on log-mean diameter of electrodes
b. Assuming 35% void volume in 800 ml of resin beads
c. Coulomb efficiency = $\frac{0.0134 \times (\text{flow} \times \Delta \text{ conductivity})_{\text{product}}}{\text{number of resin beds} \times \text{current}}$
d. Based on area of exposed fiber ends

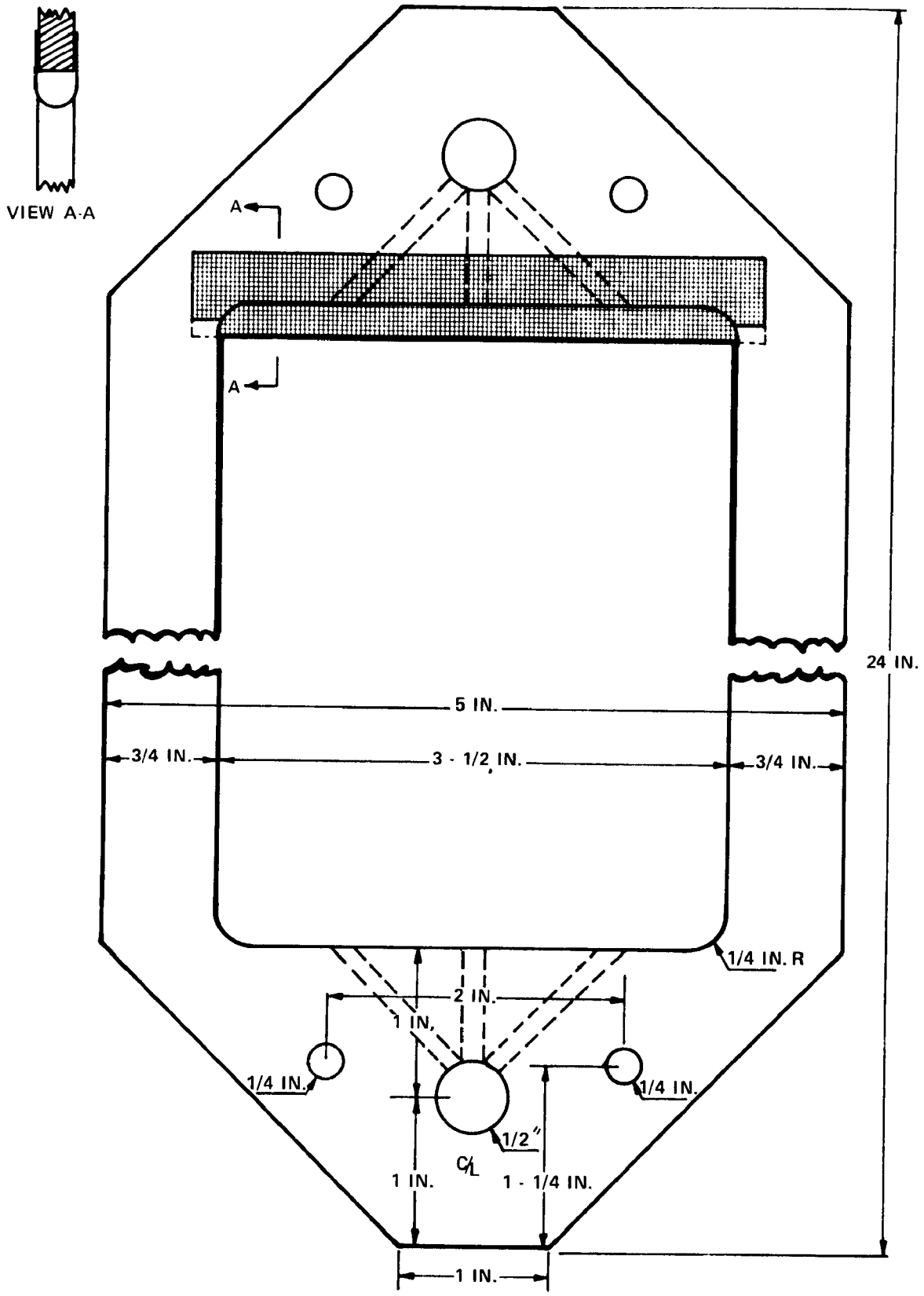

Figure 5. Design of Teflon resin compartment

A piece of 250-mesh Teflon screen was mounted on each end to prevent loss of resin beads from the compartment. A semicircular slot was cut in the inside wall of the compartment 6.35-mm from the end of each side strip, and a 100 x 38-mm piece of Teflon screen was inserted. The screen was attached to the surface of the Teflon sheet with a small amount of Permabond® 102 (Pearl Chemical Company, Tokyo, Japan) contact cement. The adhesive bond remained intact after overnight soaking in water.

For the gasket spacers for the enriching compartments, a piece of Vexar® 10 PDS 169 polyethylene netting was placed on a sheet of polyethylene film on a flat surface, and RTV silicone rubber (Silicone Calk and Sealer No. 8641 from Dow Corning Corp.) was applied around the perimeter in the pattern shown in Figure 6. Another sheet of polyethylene film and a flat plate were placed on top, and the entire sandwich was pressed together while the silicone rubber cured. The polyethylene film was peeled off, and the gasket spacer was cut to size. A thin layer of silicone rubber was applied to the surface of the Teflon before the ion-exchange membranes were put in place to improve the seal between the membranes and the Teflon resin compartments.

The end plates for the prototype device were fabricated from 610 x 178 x 19-mm (24 x 7 x 0.75-in.) pieces of Grade-221 Micarta® (fabric-reinforced phenolic by Westinghouse). Holes corresponding to those shown in Figure 5 were drilled through the Micarta to provide access to the solution manifolds. Threaded rods welded to the back side of each 495 x 89 x 1-mm electrode passed through holes in the Micarta. The method of attachment is illustrated in Figure 2. A 15-mm thick rubber gasket was placed around the perimeter of the electrode. The end plates with the multiple resin beds, membranes, and gasket spacers were clamped together with bolts that passed through holes around the perimeter of the Micarta end plates.

The necessary components of the power supply for the ERID device are an isolation transformer to protect the operator from electrical shock, a rectifier bridge to convert the AC output of the transformer to a DC input to the electrodes of the ERID device, and a light bulb which serves as a current controller. The electrical resistance of the tungsten filament of the bulb is several times as great when it is operated at its rated power as it is when it is cold. Since it is in series with the primary winding of the transformer, the light bulb protects the power supply because it limits the amount of current that can flow in that circuit. Therefore, even if a short develops in the secondary circuit, only enough current would flow to make the bulb glow brightly. During normal operation the bulb glows faintly. The current can be changed merely by changing the wattage of the light bulb. An autotransformer may also be used if precise control of current is desired.

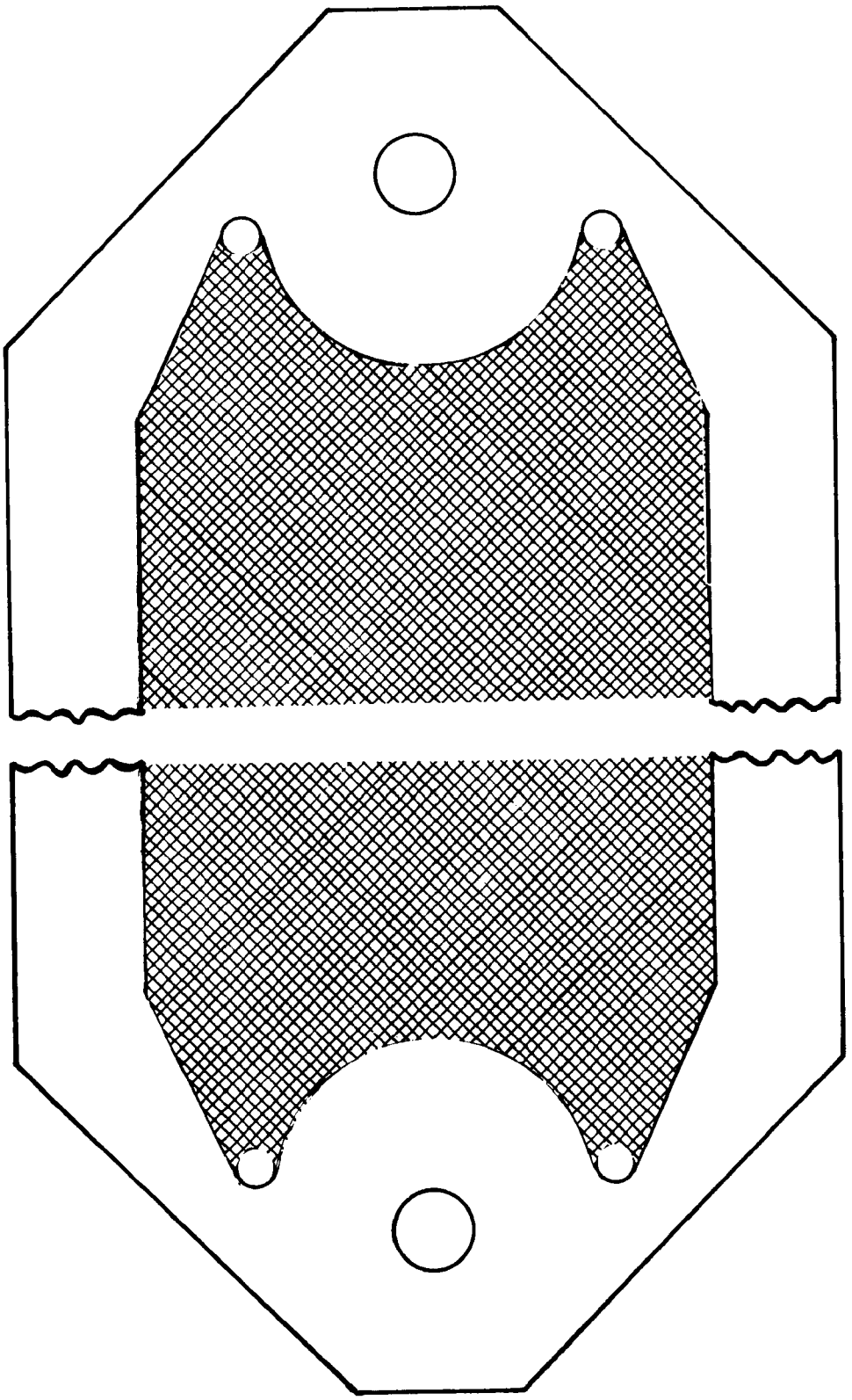

Figure 6. Gasket spacer for waste compartments

The prototype ERID device was designed to utilize tap water as feed to all of the solution compartments, but it is necessary to acidify the feed to all of the waste compartments except the anode compartment. A proportioning system was devised whereby a small amount of acid solution could be infused continuously into the tap water to feed the waste streams. A Masterflex® variable-speed peristaltic pump (No. 7545 from Cole Parmer), with six heads driven by a single motor, was used to pump the solutions in the proper proportions. The flow scheme and capacities of the pump heads are shown in Figure 7. Silicone tubing (Cole Parmer) was used in all of the Masterflex pump heads. The proportioning system in Figure 7 has a product-to-waste flow ratio of 5.83:1. A ratio of 7.9:1 could be achieved with the largest Masterflex head that pumps 3.8 ml/rev.

OPERATION AND PERFORMANCE OF PROTOTYPE ERID DEVICE

A mixture of 2 parts of IRA-68 to 1 part of C-433 was used in our initial evaluation of the new ERID device. Batches of the resins were treated separately by the 7-step procedures described in Section IV of this report (i.e., repeated cycling through acid and base followed by extraction with methanol, diethyl ether, and acetonitrile). Then the resins were mixed and placed in the resin compartments as the device was assembled. The device contained 8 cells comprising an Ionac MA-3475R anion-exchange membrane, a Teflon resin compartment, an Ionac MC-3470 cation-exchange membrane, and a gasket spacer.

The feed solution was deionized tap water with NaCl added to adjust the conductivity to about 150 μS/cm. During the first week we adjusted the flow rate and applied voltage to various levels to determine the capabilities of the device. Then we set the autotransformer in the power supply at a constant level of 100 volts and attempted to maintain a constant flow rate through the solution over the range that would be expected in tap water. Finally, we set the feed conductivity and flow rates at constant levels and varied the applied voltage. The operating data are shown in Table 9, and the results are discussed below.

After the first two days of operation in the first series of experiments, the degree of demineralization was always greater than 90%, and the coulomb efficiency remained above 50%. The pH of the product water (not shown in Table 9) remained in the range of 6.2 to 7.4 throughout this series of tests.

For the constant-voltage experiments, the conductivity of the feed was increased each morning after the data were recorded to allow a full 24 hr for each experiment. However, the closeness of the morning data to those taken the afternoon before indicated that steady state was achieved in a matter of a few hours. The data for these experiments are presented

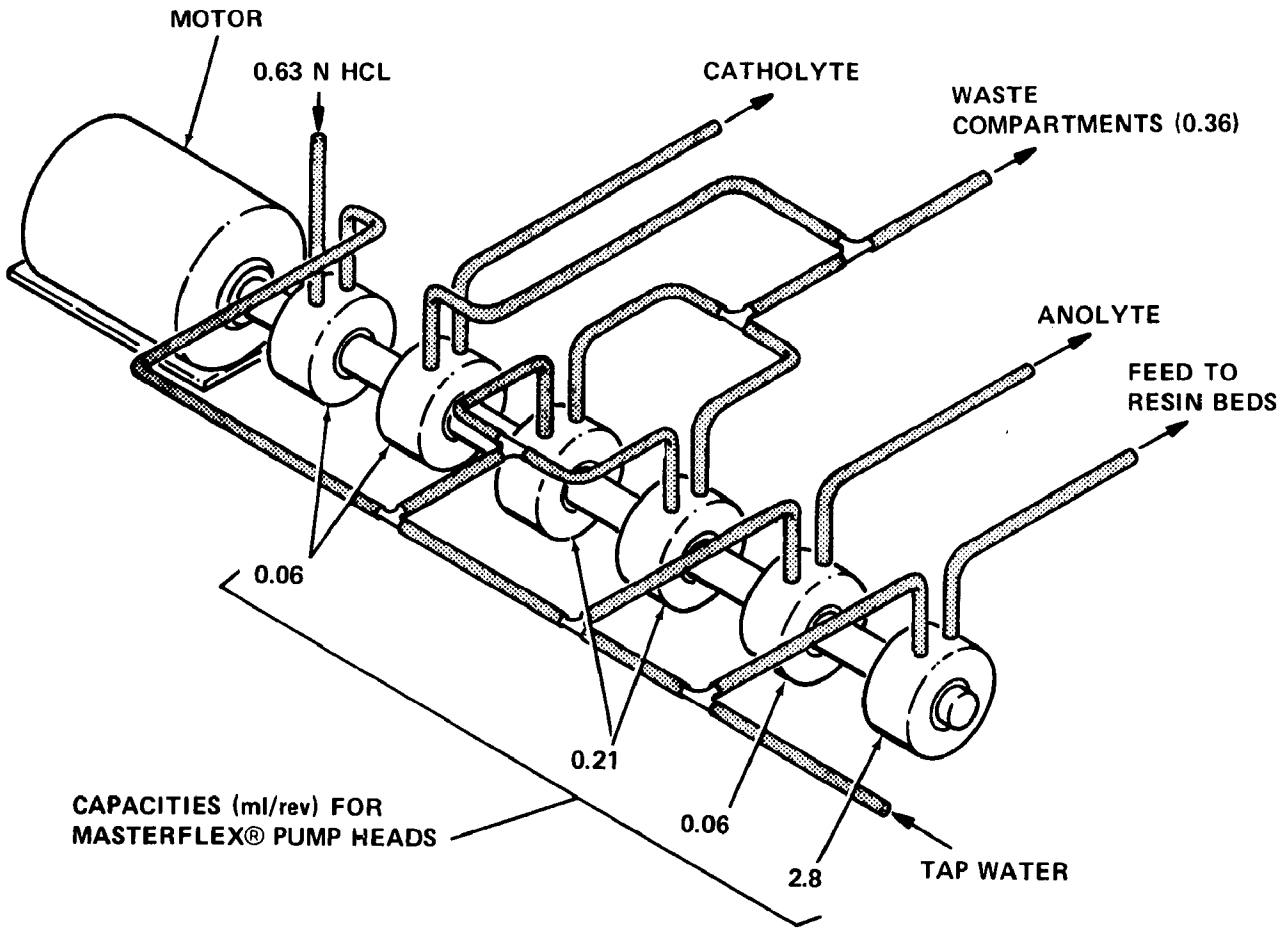

Figure 7. Flow scheme for feedwater proportioning system

TABLE 9. PERFORMANCE OF ERID DEVICE WITH 8 TEFLON RESIN COMPARTMENTS

Date	Flow rate, ml/min, of Product	Anolyte	Catholyte	Waste	Conductivity, μmho/cm, of Feed	Product	Electrode	Waste	Voltage, V	Current, mA	Coulomb[a] efficiency, %
8-26	330	21	11	49	153	25	750	2250	26	110	64
8-27	95	8	7	26	150	5	1100	3300	46	100	23
8-29	225	5	9	30	165	1	700	1370	47	98	62
8-30	240	3	7	25	165	2	700	1500	47	100	66
8-31	585	7	17	46	145	3	700	1620	35	150	93
9-1	615	5	11	22	150	5	850	3700	51	190	82
9-2	580	6	13	38	150	3	700	1940	81	220	67
9-3	600	3	13	39	150	3	950	1940	94	290	51
9-3	575	3	13	40	150	3	950	1840	81	270	54
Experiment with constant voltage and increasing feed concentration.											
9-9	600	7	11	38	170	4	1700	2000	91	280	60
9-10	590	4	12	39	310	6	4200	3900	87	455	66
9-13	580	11	13	38	410	10	7000	4900	82	530	74
9-14	630	10	6	41	530	20	4800	7000	76	710	76
Experiment with constant feed concentration and increasing voltage.											
9-14	607	8	6	37	170	17	1700	2100	30	185	84
9-14	608	-	-	40	170	9	1800	2300	40	221	74
9-15	603	8	6	40	170	7	1650	2200	50	231	71
9-15	600	9	6	40	170	6	1800	2350	60	260	64
9-15	600	9	7	40	170	5	1900	2450	70	285	58
9-15	598	9	7	40	170	5	2000	2480	80	315	52
9-15	593	9	6	39	170	5	2200	2550	90	336	49
9-15	600	9	7	39	170	4	2100	2550	100	355	47

[a] Coulomb efficiency = $\frac{0.0134 \times (\text{flow} \times \Delta \text{ conductivity})_{\text{product}}}{8 \times \text{current}}$

graphically in Figure 8. As the conductivity of the feed was increased, the flow of electrical current increased almost proportionately so that 96 to 98% of the salt was removed from the water. The coulomb efficiency improved with increasing feed concentration. Although a constant input voltage of 100 V was maintained, internal resistance of the power supply caused the voltage measured across the electrodes to decrease with increasing current.

For the constant-feed experiments, a 1514-liter (400-gal) batch of feed solution was made up with deionized water and NaCl. Flow rates were set at the beginning of the experiment, and no adjustments were made. The applied voltage (measured across the electrodes) was adjusted in 10-V increments from 30 to 100 V. After each increase the system was allowed to reach steady state before data were recorded. The results are shown graphically in Figure 9. Operation at 30 V removed about 90% of the NaCl from the feed solution. The degree of demineralization was further increased to 97% by application of higher voltage, but this improvement came at the expense of considerable power. Above 60 V the incremental improvement was slight. Therefore, 60 V is probably the maximum practical voltage for this 8-compartment ERID device with NaCl feed solution.

In a final experiment of this series (not shown in Table 9), we reduced the product flow to 300 ml/min and applied 60 V to the electrodes. The conductivity of the product dropped to 2.4 μS/cm (i.e., 98.6% removal of salt).

In our first experiments with tap water as feed to the prototype device, we had not yet begun to use the proportioning system shown in Figure 7. Instead we used two separate Masterflex pumps that allowed independent control of the flow rates of the product and waste streams, and we experimented with the flow rates and concentration of acid in the waste streams to find workable operating conditions. The results of these experiments are shown in Table 10. In the first series of experiments the feed to the waste streams was 0.032 N HCl. During the first three days, there was a rapid buildup of hydraulic and electrical resistance of the device, and the conductivity of the product water increased to unacceptable levels. Evidently either calcium and bicarbonate ions were accumulating in the resins, or calcium carbonate was precipitating in the waste compartments, or both accumulations were taking place. The power was turned off, and the resin beds and waste compartments were rinsed in place with 0.01 N HCl. Initially the performance was improved markedly, but it soon began to deteriorate.

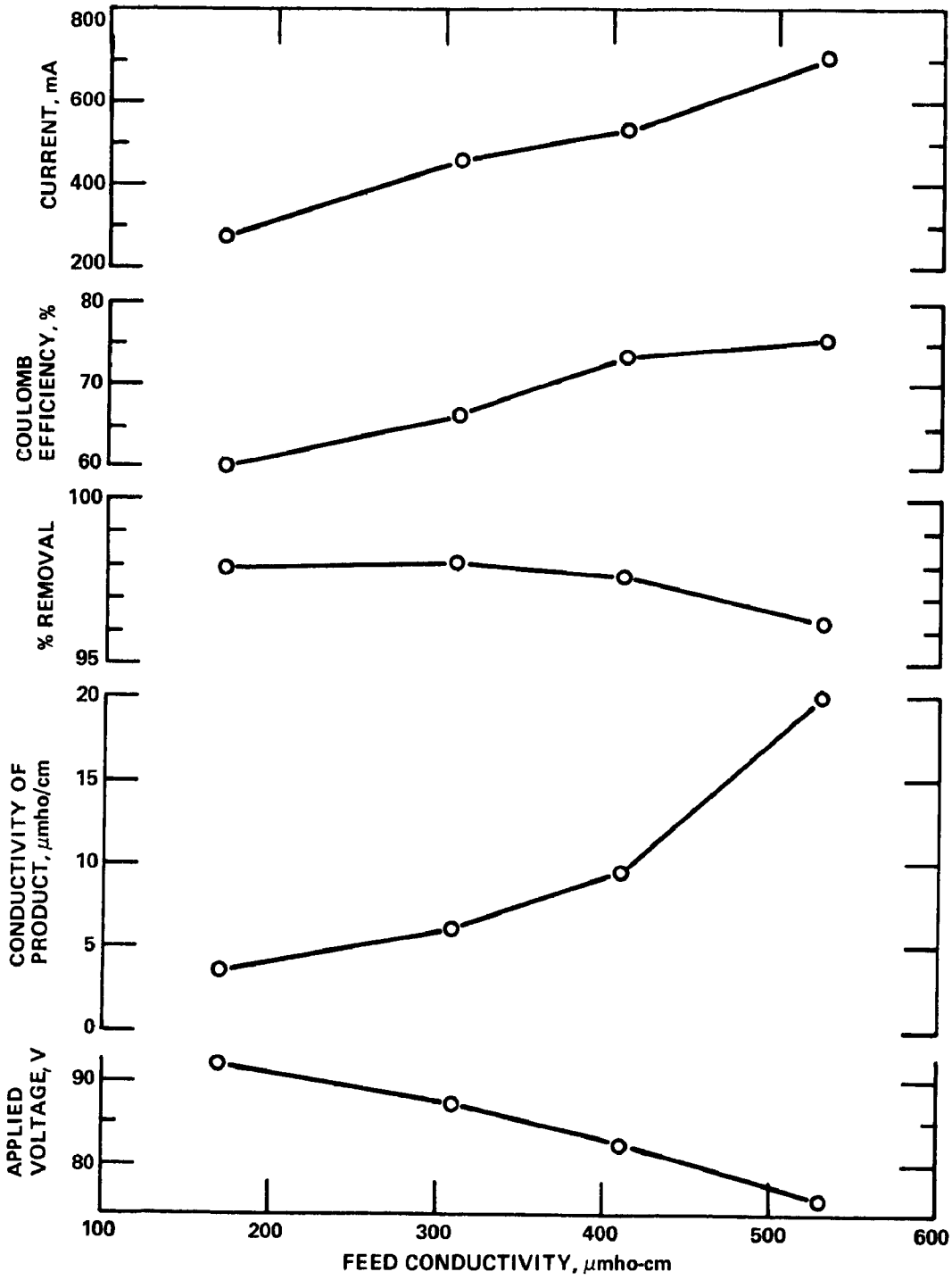

Figure 8. Effect of feed conductivity on operating parameters of ERID

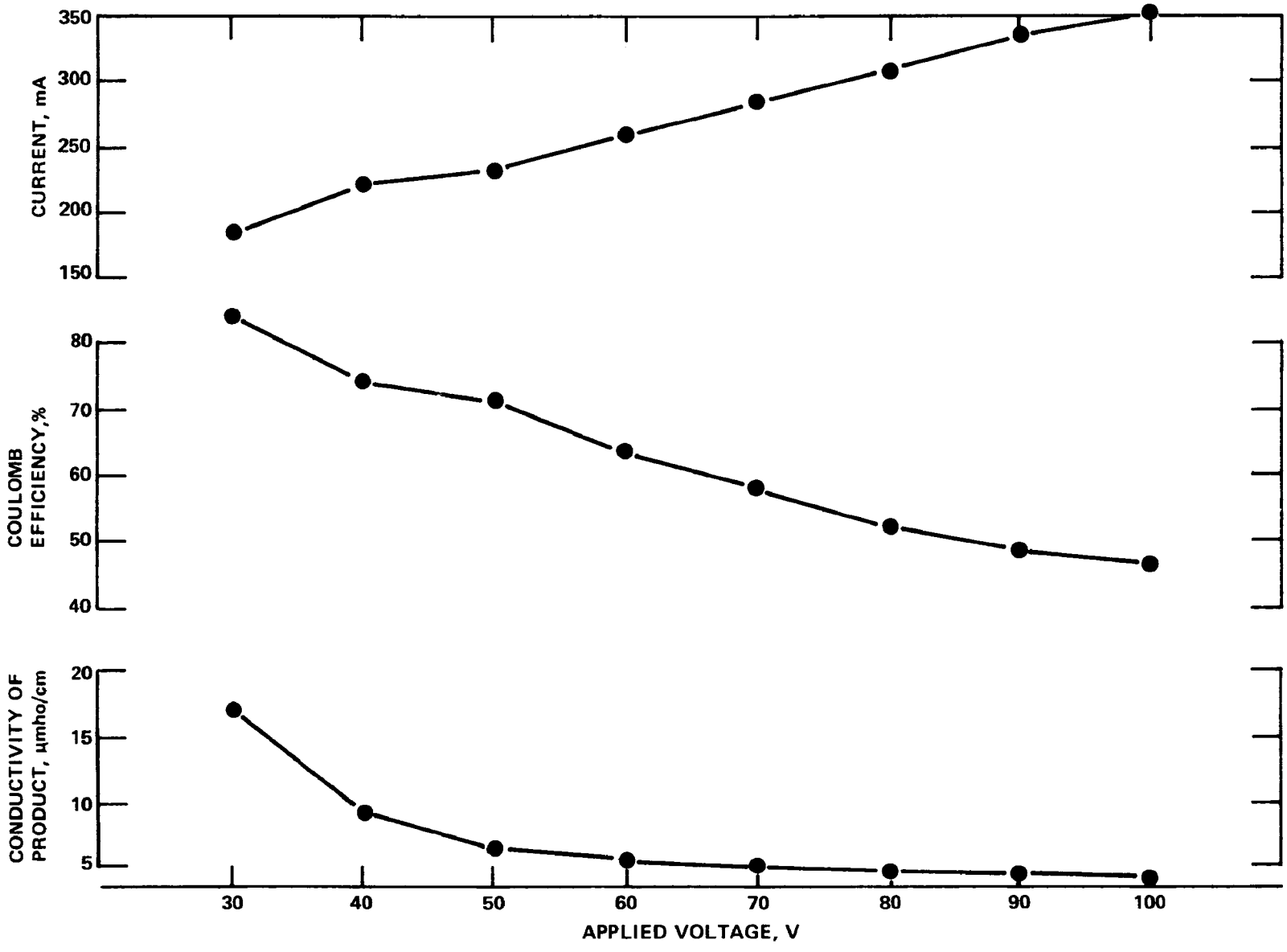

Figure 9. Effect of applied voltage on operating parameters of ERID

TABLE 10. PERFORMANCE OF PROTOTYPE ERID DEVICE WITH TAP WATER AS FEED

Date	Flow rate, ml/min, of Product	Waste	Conductivity, µS/cm, of Feed	Product	Voltage, V	Current, mA	Coulomb efficiency, %
9-22	510	75	220	7	79	380	48
9-23	485	72	225	22	74	225	73
9-24	430	73	225	34	73	230	60
	Rinsed device with 0.01 N HCl with power off						
9-29	400	61	250	9	71	404	40
9-30	330	46	250	7	74	350	38
10-1	300	36	250	5	78	290	44
10-5	460	31	220	15	80	230	67
10-5	615	33	225	40	82	200	95
	Disassembled device, rejuvenated resins and replaced damaged membranes						
10-3	440	96	215	8	49	270	56
10-14	450	89	205	6	50	250	60
10-15	590	93	200	9	48	294	64
10-18	600	97	200	12	49	290	65
10-19	710	91	190	13	49	242	87
10-20	580	90	185	9	76	310	55
10-21	500	97	190	7	75	315	49
	Reversed flow through all compartments and inverted device						
10-26	680	78	195	16	74	330	62
10-27	580	90	220	9	78	272	68
10-28	550	93	215	9	78	264	72
10-29	490	82	215	11	78	262	64
11-1	410	79	240	56	0	0	-
11-2	385	82	240	28	76	284	47
11-3	560	87	250	17	76	284	77
11-4	670	68	225	17	73	380	61
11-5	630	75	230	17	74	385	58
	Rinsed device in place with 2 N HCl then 1.5 N NaOH						
11-10	195	42	230	13	100	350	20
11-11	580	95	222	8	73	364	57
11-12	640	97	220	27	77	260	80
11-16	650	104	175	30	74	340	46
11-17	580	100	185	23	74	385	41
	Rinsed in place with 3 cycles of acid and base						
11-30	460	80	220	4	75	360	47
12-1	660	127	225	8	71	390	62

To determine the cause of the unsatisfactory performance, we disassembled the ERID device and inspected the resin beds and waste compartments. A brown slime was found in the inlet side of all compartments, and a white precipitate was found in the waste compartments, particularly on the surfaces of the anion-exchange membranes. The precipitate was dissolved with HCl solution, and the screens were scrubbed with detergent and rinsed with formaldehyde solution to remove the slime. The mixed resins were rinsed sequentially with 2 N HCl, 1.5 N NaOH, 2 N NaCl, methanol, diethyl ether, and acetonitrile. Damaged membranes were replaced, and the device was reassembled with two 0.58-mm-thick gasket spacers in each waste compartment.

For the next series of experiments the feed solution to the waste compartments was 0.095 N HCl, and the feed to the resin beds and anode compartment was tap water. The demineralization performance remained satisfactory for about two weeks of continuous operation near the design flow rates. The ERID device was shut down each weekend because there was inadequate storage capacity for feed water. At the end of the second week there was an increase in hydraulic resistance. To remedy this apparent accumulation of debris at the entrance to the resin beds, the device was inverted, and the inlet and outlet connections were switched. This maneuver restored enough permeability to the resin bed to allow operation for another week, but the flow rate gradually dropped off again. When the device was turned on at the beginning of the next week, the operator failed to energize the electrodes, and tap water flowed through the device for 4 hr during which the conductivity of the product increased to 56 μS/cm as the ion-exchange capacity of the resins became exhausted. When the electrodes were energized, the demineralization improved, but not to the levels achieved the previous week.

This time we attempted to clean the resins in place rather than disassemble the ERID device. First the device was inverted, and the flow was reversed. Then 6 liters (approximately 4 bed volumes) of 2 N HCl were pumped through the resin beds. There was considerable evolution of gas (presumably carbon dioxide) at the beginning of the acid rinse, but it subsided before the full 6 liters had been used. The device was rinsed with 3 liters of deionized water followed by 3 liters of 1.5 N NaOH and another 3 liters of deionized water. Finally it was rinsed with 0.1 N HCl until the effluent became acidic, and the electrodes were energized. The demineralization performance the next day was improved, but the improvement was only temporary.

The efforts to rinse the resins in place were repeated, but this time the resins were contacted with three cycles of acid-water-base-water rinses to ensure adequate exposure to the rinse solutions. The multiple rinses proved effective,

and the performance improved. Evidently the microbial colony and the calcium carbonate were removed. Therefore, we concluded that rinsing in place was an effective method of rejuvenating the ERID device, and we recommend such rinsing whenever the demineralization performance or the hydraulic permeability of the ERID device begin to deteriorate. If good performance cannot be restored by rinsing in place, the device should be disassembled and inspected.

An experiment was conducted to determine the change in total organic carbon content of water that flowed through the ERID device. TOC analyses were carried out at the Environmental Research Laboratory in Athens, Georgia. The ERID device had been operated intermittantly for one month and had processed over 10,000 liters of tap water. First, 15 liters of distilled water were allowed to flow through the resin beds, and samples of the afferent and efferent were taken. The device filled with distilled water was allowed to sit for 30 min; then 50 ml were drained from the bottom, and a sample was taken. The device was put back in operation with tap water as feed for 24 hr. Then samples of feed and product were taken. The result of the carbon analyses are shown in Table 11. The results indicate that passage through the ERID device contributed some organic and inorganic solutes to the distilled water and removed some from the tap water. The values of organic carbon in the tap water appeared to be abnormally high. A TOC value of 2.24 mg/liter was reported by the Birmingham Water Works in June, 1976.

TABLE 11. CARBON CONTENT OF WATER BEFORE AND AFTER TREATMENT WITH PROTOTYPE ERID DEVICE CONTAINING 2:1 MIXTURE OF IRA-68 AND C-433

Sample	Inorganic carbon, mg/liter	Organic carbon, mg/liter
Distilled water afferent	0.2	1.7
Distilled water efferent	5.1	3.1
Distilled water drained from resins	1.1	1.9
Tap water feed	21.0	22.0
Product from tap water	7.0	17.0

SECTION VI

PERFORMANCE OF COMBINED ERID-RO SYSTEM

The system for recovering organic solutes in a concentrated form from drinking water will utilize ERID as a pretreatment to remove inorganic salts from the water before the organics are concentrated by reverse osmosis (RO). This two-stage operation can be carried out as a one step operation with the product from the ERID Device going directly to the RO unit, or it can be carried out as two distinct steps. We chose the two-step method because we had adequate storage capacity. Moreover, the two-step method eliminated problems of precisely matching the throughput capacities of the two processes.

The laboratory equipment included two 1893-liter (500-gal) tanks (one for the feed solution and the other for the product from the ERID device), a 114-liter (30-gal) tank to supply solution to the waste compartments of the ERID device, a Masterflex pump to supply solutions to the ERID device in the proper proportions, the plate-and-frame ERID device, and the RO unit (Continental Model 3011). In the first experiment the feed solution was prepared by the addition of NaCl to deionized water, but in all subsequent experiments the feed solution was Birmingham tap water. The ERID device was operated with constant flow and applied voltage until steady state was achieved. Then a radiolabeled test organic solute was added to the solution in the feed tank. Samples of the feed and product were taken periodically for analysis by scintillation counting. The flow rates, voltage, current, and solution conductivities were monitored and recorded.

When all of the feed solution had passed through the ERID device into the product collection tank, the RO treatment was begun. The feed tank became the permeate collection tank, and the tank containing the deionized product became the reject recirculation tank. Samples of permeate and reject were collected for scintillation counting, and the conductivities of both steams were monitored and recorded. RO treatment was continued until the volume of the reject reached its lowest manageable level.

The first combined ERID-RO experiment was conducted while the experimental ERID devices were being evaluated. The ERID device contained four 6.35-mm thick resin beds filled with

a 2:1 mixture of IRA-68 and CC resins and bounded by Ionac MC-3470 and MA-3475R membranes. The NaCl feed solution contained 2.15 μg/liter of ^{14}C-labeled dimethylnitrosamine (DMNA). The ERID treatment reduced the conductivity of the solution from 150 μS/cm to less than 10 μS/cm, and only 1.4% of the DMNA was lost. The data from the RO experiment are shown graphically in Figure 10. The rejection of DMNA by the Permasep® hollow fibers was low. The average ratio of reject to permeate concentration of DMNA was 1.9, which corresponded to a solute rejection of only 35.7%. Greater than 98% rejection of NaCl was achieved. The conductivity of the solution increased more than 100 fold, while the DMNA content increased only 6 fold as the volume was reduced from 720 liters to about 4 liters. Therefore, substantial recovery of DMNA from drinking water by treatment with the Permasep RO unit did not appear to be feasible.

The final prototype ERID device was used in the second combined ERID-RO experiment. The eight Teflon compartments contained a 2:1 mixture of IRA-68 and C-433 resins and were bounded by Ionac MC-3470 and MA-3475R membranes. The feed solution contained 2.3 μg of ^{14}C-labeled reduced Michler's ketone per liter of filtered Birmingham tap water. The effluent from the ERID device retained 12% of its initial conductivity and 36% of its radioactivity. Only 6% of the radioactivity was removed in the waste streams; the remainder was retained by the resins. When the resins were rinsed with two cycles of HCl and NaOH solutions, 21% of the retained radioactivity was recovered.

The 1022-liter (270-gal) batch of product from the ERID treatment was concentrated to 151 liters (40 gal) by RO. The final ratio of reject to permeate concentration of the radiolabeled material was 21.5, and the rejection was 79%. Reduced Michler's ketone was effectively concentrated by RO, but the two amine groups on the molecule had a strong affinity for the resins in the ERID device.

The final combined ERID-RO experiment was conducted with 8 ng of ^{3}H-labeled cholic acid per liter of filtered tap water. The eight resin beds in the ERID device contained fresh resins and membranes. The ERID treatment reduced the conductivity of the water from 225 μS/cm to 7 μS/cm. The retention of cholic acid in the ERID device was 98% after 1 hr, 96% after 6 hr, and 80% after 18 hr. Overall, 84% was retained by the resins, and less than 0.1% was in the waste streams. When the device was subsequently rinsed with one cycle of 2 N HCl and 1.5 N NaOH, 54% of the retained cholic acid was recovered.

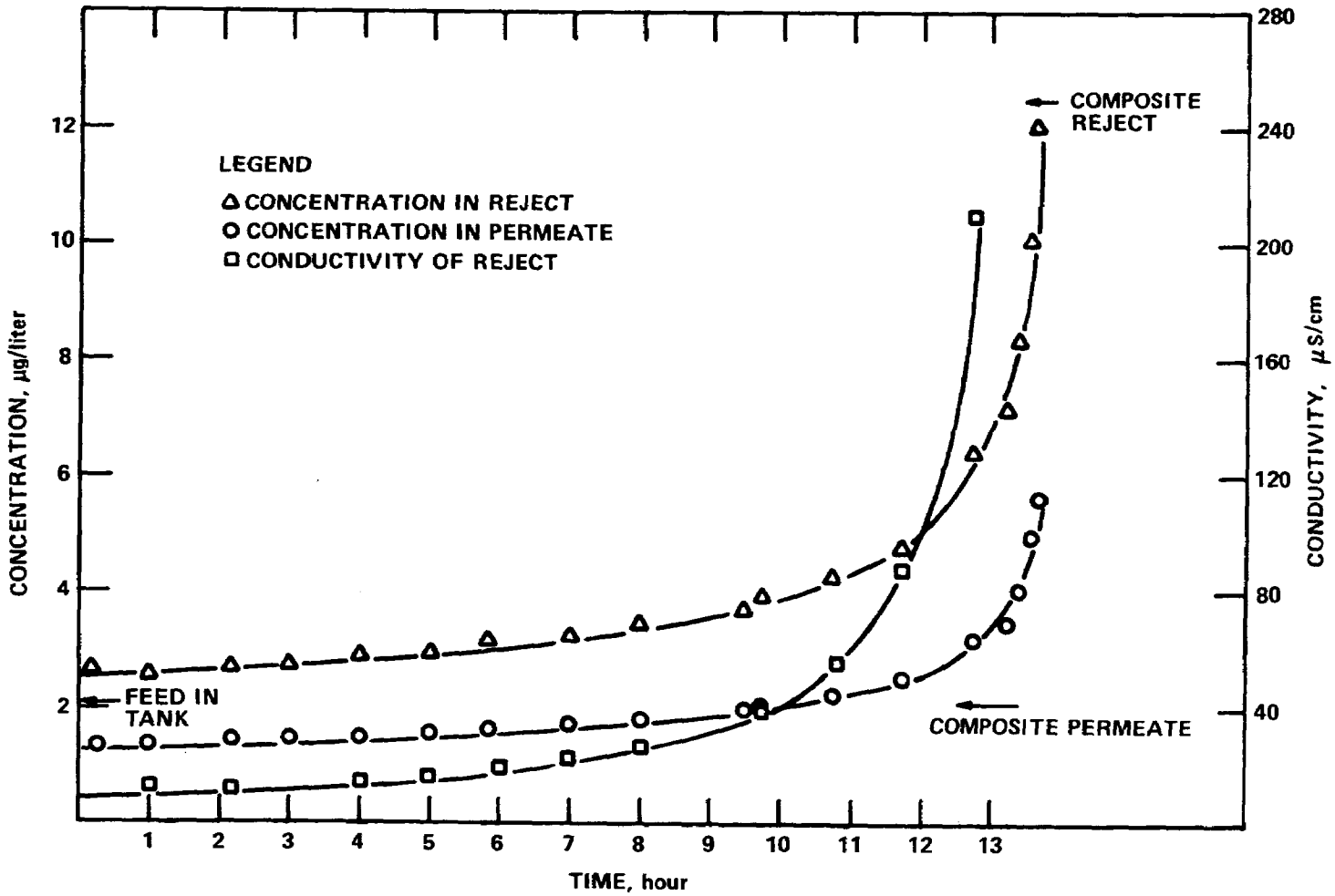

Figure 10. Reverse osmosis treatment of a solution containing 2.05 µg/liter of dimethylnitrosamine

When the product from the ERID device was treated by RO, 96% of the cholic acid was rejected, and the final ratio of reject to permeate concentration was 155. Cholic acid was easily concentrated by RO, but its carboxylic acid group has a strong affinity for the anion-exchange resins in the ERID device. It is likely that a larger fraction of the cholic acid could be recovered from the ERID device by more extensive rinsing.

REFERENCES

1. Walters, W.R., D.W. Weiser, and L.J. Marek. Concentration of Radioactive Aqueous Wastes. Ind. Eng. Chem. 47, 61 (1955).

2. Glueckauf, E. Electro-Deionisation through a Packed Bed. Brit. Chem. Eng. 4, 646 (1959).

3. Sammon, D.C., and R.E. Watts. An Experimental Study of Electrodeionisation and its Application to the Treatment of Radioactive Wastes. United Kingdom Atomic Energy Authority Report AERE-R 3137 (1960).

4. Prober, R., and C.E. Myers. Electrolytic Regeneration of Ion-Exchange Resins, Final Report to the Office of Saline Water on Contract 14-01-0001-1255 (1968).

5. Davis, T.A., and R.E. Lacey. Electro-Regeneration of Ion-Exchange Resins, Final Report to Artificial Kidney-Chronic Uremia Program of the National Institute of Arthritis and Metabolic Diseases (1972).

6. Mantoura, R.F.C., and J.P. Riley. The Analytical Concentration of Humic Substances from Natural Water. Anal. Chim. Acta 76, 97 (1975).

7. Van Beneden, G., and P. Van Beneden. Chem. Abstracts 72, 136224V (1970).

8. Bohnsack, G. Experiments on the Behavior of Anion-Exchange Resins toward Humic Acids. Mitt. VGB. 73, 53 (1962).

GLOSSARY

anode: A platinized-titanium plate attached to the positive lead of the electrical power supply. Anions (e.g., chloride, sulfate, bicarbonate, and hydroxyl ions) migrate toward the anode.

anolyte: The rinse solution in the anode compartment. It contains the hydrogen ions and the oxygen and chlorine gas generated at the anode as well as the anions that enter from the adjacent resin bed.

cathode: A stainless-steel plate attached to the negative lead of the electrical power supply. Cations (e.g., sodium, calcium, and hydrogen ions) migrate toward the cathode.

catholyte: The rinse solution in the cathode compartment. It contains the hydroxyl ions and the hydrogen gas generated at the cathode as well as the cations that enter from the adjacent resin bed.

conductance: Reciprocal of resistance. Sieman = ohm^{-1}

conductivity: The conductance of a specimen 1 cm in length and 1 cm^2 in cross section expressed as μS/cm.

coulomb efficiency: The fraction of the electric current that is utilized in removal of salt from the resin bed; specifically, the equivalents of salt removed per faraday (96,494 A sec) of current flowing through the resin bed.

demineralization performance: The effectiveness with which the ERID device removes salts from the feed solution. The degree of demineralization was measured by the percentage change in the conductivity of the solution treated by the ERID device.

electrodialysis: A deionization process in which solutions of electrolytes flow through multiple compartments bounded alternately by anion- and cation-exchange membranes. Direct electric current transports ions through the membranes and causes enrichment and depletion of solutions in alternate compartments.

equiconductance point: The unique value of conductivity of an ion-exchange resin that is equal to the conductivity of the electrolyte solution in which it is equilibrated.

ERID: Electro-Regenerated Ion-exchange Deionization, a process by which mixed beds of ion-exchange resins are continuously or cyclicly regenerated in the depleting compartments of an electrodialysis apparatus.

exhaust: To convert a resin from its regenerated form to another ionic form (e.g., chloride form for anion-exchange resins and sodium form for cation-exchange resins).

feed: The solution that enters a solution compartment of the ERID device.

permeate: The solution that passes through the walls of the hollow fibers in the RO unit.

regenerate: To convert anion-exchange resins to the hydroxyl or free base form and cation-exchange resins to the hydrogen form.

reject: The solution that does not pass through the walls of the hollow fibers in the RO unit.

rejection: The ability of an RO membrane to allow passage of some molecules, such as water, while preventing the passage of other molecules, such as organic solutes.

rejuvenate: To renew the demineralization performance of an ERID device by rinsing away unwanted materials.

reverse osmosis, (RO): A process in which pressure is applied to force solvent out of a concentrated solution, through a semipermeable membrane, into a more dilute solution.

APPENDIX A

RECOVERY OF BIS(2-CHLOROETHYL) ETHER BY SPARGING

Our first procedure for analysis of bis(2-chloroethyl) ether (BCE) required extraction from the aqueous solution with diethyl ether. In this procedure the volatile BCE (b.p. 178°C) was subject to loss by evaporation. A study was carried out to determine the feasibility of recovering BCE from large quantities of dilute aqueous solution by sparging with nitrogen. The all-glass experimental apparatus included a charcoal filter to adsorb foreign organic material from the commercial bottled nitrogen, a sparge tube in a 500-ml flask, an ice-cooled condenser to remove moisture from the discharge gas, and two or three collection tubes containing 0.2 g of solid sorbent. In a typical experiment, a 500-ml batch of solution was sparged with nitrogen flowing at 500 ml/min for at least one hour. Then the contents of each collection tube, including the glass-wool plugs, were placed in a vial, and 2 ml of ethanol were added. Samples of the ethanol extracts of the individual tubes were analyzed by GC.

GC conditions for BCE analysis:

Column:	2 m by 0.4-cm-i.d. glass 10% Apieson L on Gas Chrom Q 110°C
Detector:	Flame ionizatoin 200°C
Carrier:	Helium, 35 ml/min
Injection port;	170°C
Sample size:	5 µl

In our early experiments, we recovered negligible amounts of BCE by sparging at ambient temperature. When the temperature was raised to 50°C, a Porapac Q® sorbent picked up 60% of the BCE in 4 hr and 97% in 8 hr. However, we encountered contaminants in Porapaq Q and used Tenax® as the solid sorbent in subsequent experiments.

The data from nine sparging experiments are shown in Table 12. In Experiment 1 the low temperature and short sparging time were apparently inadequate. In all experiments after Experiment 1, 30 g of NaCl were added to the solutions to lower the volatility of the water and to increase the relative volatility of the ether. A slight improvement was noted in Experiment 2. The higher temperature in subsequent experiments improved recovery considerably. Comparison of Experiments 4 and 5 indicates that sparging for 2 hr is adequate; longer sparging merely forces more BCE into the second column. A third Tenax tube in Experiment 5 contained no BCE. A shorter sparging period in Experiments 6 and 7 again proved inadequate. For Experiments 8 and 9 the BCE content of the solution was reduced to 0.1 mg/l. The results of those experiments were only semiquantitative because the low concentrations of BCE in the ethanol extract approached the threshold level of detection by the gas chromatograph.

The data in Table 12 indicate that sparging is an efficient method for recovering BCE from dilute solutions. Further improvements might be achieved by an increase in the volume of the solution, optimization of the flow rate of nitrogen, and a change of the design and content of the sorbent tubes.

At this stage of its development, the sparging technique is only an analytical tool. However, a well-designed, continuous, countercurrent sparging system might be useful for recovering the volatile organics from large quantities of drinking water. Moreover, the sparging process might be compatible with the system we are now investigating. Sparging might be used to remove a large fraction of the volatile organics before the water is demineralized or to remove the residual organics from the permeate of the reverse osmosis unit. However, investigation of the feasibility of continuous sparging was beyond the scope of this contract.

TABLE 12. RECOVERY OF BIS(2-CHLOROETHYL) ETHER BY SPARGING

Experiment number	Concentration, mg/liter	Sparging time, hr	Temperature, °C	Recovery, % total	Recovery, % second tube
1	1.0	1	50	28	0
2	1.0	1	50	30	0
3	1.0	2	70	92	20
4	1.0	3.5	70	102	60
5	1.0	2	72	102	5
6	1.0	1.5	70	60	0
7	1.0	1.5	75	60	0
8	0.1	2	68	87	0
9	0.1	2	75	80	0

APPENDIX B

REVERSE OSMOSIS TREATMENT OF WATER CONTAINING TEST ORGANIC SOLUTES

In the first experiment with the combined ERID-RO system (Section VI) we found that dimethylnitrosamine was not rejected by the RO membrane and was, therefore, not a suitable test organic solute for our studies. Before other organic solutes were used in the full-scale experiments with the combined ERID-RO system, they were evaluated in small-scale RO experiments to determine the degree to which they would be rejected by the RO membrane. For these experiments, the RO unit was thoroughly rinsed with at least 75 liters of deionized water, and the reject rate was adjusted to 50%. Then a 38-liter batch of deionized water spiked with a radiolabeled test organic solute was treated by RO, and samples of the feed, permeate, and reject were taken for scintillation counting.

In the first experiment, a solution of ^{14}C-labeled 2,4,6 trimethylaniline (TMA) was treated by RO. The radioactivity of the effluent samples indicated that 2% of the TMA was in the permeate and 98% was in the reject. However, a material balance showed that 42% of the TMA had remained in the RO unit. The permeate and reject from the first test were mixed and treated again, the proportion of TMA in the permeate and reject were again 2:98, but 38% of the total radioactivity was lost. The permeate and reject were mixed again for a third test. This time reject was recirculated into the feed tank. After 19 liters of permeate had been collected, the proportions of TMA in the permeate and reject were 3:97, and 39% had been lost. When this experiment was repeated another 34% was lost.

A solution containing ^{14}C-labeled reduced Michler's ketone was treated by RO. The reject was recirculated to the feed tank, and the permeate was collected in another tank. Samples were taken initially and after half of the solution had permeated the RO membrane. In the first experiment the permeate contained 0.8% of the radioactivity, and 54% was lost. The permeate was poured back into the feed tank, and the experiment was repeated. This time the permeate contained 1.1% of the radioactivity, and 44% was lost.

In a subsequent experiment with a fresh batch of solution containing ^{14}C-labeled reduced Michler's ketone, the RO unit was operated with a reject rate of 50%. Negligible radioactivity was detected in the permeate, and 63% was lost in the RO unit. After half of the solution had permeated the RO membranes, the reject pressure valve was opened fully to allow complete recirculation with no permeate for a period of 10 min. During this period, 42% of the remaining radioactivity was lost. The permeate and reject were mixed, and the RO experiment was repeated with a reject rate of 75%. This time 0.3% of the radioactivity appeared in the reject, 52% was lost during the RO experiment, and 20% of what remained was lost during the 10-min flush.

When a solution containing ^{3}H-labeled cholic acid was treated by RO, 1.1% of the radioactivity was found in the permeate, and the remainder was in the reject. There was no measurable loss of cholic acid in the RO unit.

The results of these experiments indicate that the Permasep hollow fibers in the RO unit have a considerable affinity for amines. The radiolabeled solutes were apparently absorbed by the polyamide fibers. Since the fraction of the radioactivity lost appeared to drop off in repeated experiments, a saturation point may be reached if large volumes of water were treated. However, the amount of data we collected is sufficient only to point out the potential problem of absorption of organic solutes by the RO unit.

The solutes of higher molecular weight; 2,4,6 trimethylaniline (M.W. 135), reduced Michler's ketone (M.W. 254), and cholic acid (M.W. 409); could be effectively concentrated by RO because they did not permeate the RO membrane to any great extent. On the other hand dimethylnitrosamine (M.W. 74) permeated the RO membrane to such an extent that it could not be concentrated by RO. Therefore, some other technique, such as the sparging technique described in Appendix A, will be needed to concentrate solutes of low molecular weight.

APPENDIX C

PROCEDURES FOR OPERATION AND MAINTENANCE OF THE PROTOTYPE ERID DEVICE

The end plates, electrodes, resin compartments, and gasket spacers are permanent components of the ERID device that should require only gentle cleaning when the device is disassembled. The resin beds and membranes will require occasional cleaning or replacement. The symptoms of malfunction and the recommended remedial action are presented below.

The resin beds in the ERID device are effective filters for particulate matter, and any material that they trap will reduce the hydraulic permeability of the resin beds. Therefore, it is recommended that filter with 5-μm pore size be installed in the feed-water supply line to prevent entry of particulate matter. Filtration of feed water will reduce, but not completely eliminate, the need for cleaning the ERID device. Before each experiment, ensure that the filter is clean, pull a new section of tubing into each Masterflex pump head, and prepare a 40-liter batch of 0.63 N HCl solution (52.6 ml of concentrated HCl per liter) for the waste streams. Then energize the feed pump and measure the flow rates and pH of each effluent stream. The pH of the product and anolyte should be near 7, and the catholyte and waste should be about 2. The flow rates should be proportional to the values shown in Figure 7. If they are not, check the flow rates from the individual pump heads to see that they are functioning properly. If restrictions in flow appear to be in the ERID device, invert the device, switch inlet and outlet lines, and operate the device with reverse flow. If proper flow cannot be achieved disassemble and inspect the device.

After the initial check shows the proper values of pH and flow rate, energize the electrodes and recheck the pH of the anolyte and catholyte to ensure that both are acidic. If the anolyte is basic, the polarity of the electrode connections is reversed, and severe damage to both electrodes will occur. Measure the conductivity of the product water to ensure adequate demineralization. If the ERID device has been inverted or operated with electrodes deenergized for an extended period, several hours of operation may be required before 90% demineralization is achieved. If demineralization

is marginal, it can be improved somewhat by increasing the wattage of the current-control light bulb. (Do not exceed 150 w.)

Shutdown of the ERID device by the procedure described below will facilitate startup in the next experiment. First, deenergize the electrodes and allow all solutions to continue flowing for 10 min. Then invert the device, switch the inlet and outlet lines, and pump solutions through for 10 min with no power to the electrodes and with tap water flowing through the acid-feed pump. Invert the device, switch the inlet and outlet lines, start the pump to ensure that air has been displaced from the solution compartments and connecting lines, then let the device stand with all compartments filled with solution.

Minor accumulations of calcium carbonate in the ERID device can be removed by rinsing in place with acid, and accumulations of humic acid can be partially removed by rinsing with base. Therefore, cycling the resins between acid and base is useful for rejuvenating the resins in place. Prepare 14 liters of 2 N HCl and 12 liters of 1.5 N NaOH. With the electrodes deenergized, rinse the resin bed successively with 4-liter batches of HCl, tap water, NaOH, and tap water. (The acid and base should flow upward through the device, and the tap water should flow downward.) Repeat this cycle three times. Rinse with HCl until the effluent from the resin beds becomes acidic. Rinse the excess acid from the device, energize the electrodes, and allow the device to regenerate with normal flow rate to all solution compartments until the pH and conductivity of the product reach the desired range.

If the performance of the ERID device cannot be restored by rinsing in place, there is probably a problem of poor flow distribution that can only be solved by disassembly and inspection of the internal components. To disassemble the device, disconnect the electrical leads and the solution lines, lay the device on its side with blocks to support the end plate, remove the bolts, and raise the top end plate to expose the electrode compartment. Leaving the membranes attached to the Teflon resin compartments, remove each resin bed as a unit, and inspect all waste-solution compartments and membranes. If precipitate is found, dissolve it by rinsing with 0.2 N HCl. If the problem can be identified and solved without disturbing the seal between the membranes and the Teflon compartments, reassembly will be much easier. If the problem appears to be in the resin beds, peel back the anion-exchange membrane on each end and inspect the resins. The presence of slime or discoloration of the resins indicates the need to recycle the resins by the 7-step procedure described in Section IV of this report. If new resins are needed, the anion- and cation-

exchange resins should be pretreated separately by the 7-step procedure. Then completely drain the water from the resins, mix them thoroughly, and pack them tightly in the Teflon compartments.

Membranes that have precipitates of calcium carbonate on their surfaces can be cleaned by rinsing with 0.1 N HCl. Slime on membranes and spacers can be removed by gentle brushing with a Clorox® solution. If membranes appear damaged, they should be replaced. The anion-exchange membrane adjacent to the anode is likely to need frequent replacement because it is exposed to oxidizing conditions. Ionac membranes, which are shipped dry, require pretreatment before they are installed in the ERID device. Cation-exchange membranes should be soaked in tap water for 30 min at room temperature, then in hot tap water (90 to 100 C) for an additional 30 min. Anion-exchange membranes should be soaked in tap water for 30 min and in 0.2 N NaCl solution at 75 to 90 C for 45 min. Then all membranes should be rinsed and stored in distilled water at room temperature until they are trimmed to size and holes are punched for solution manifolds.

Assembly of the ERID device is facilitated if the anion-exchange membranes are attached to the Teflon resin compartments. Apply a thin layer of RTV silicone rubber around the entire perimeter on one surface of the Teflon compartment. Wipe the surface of the membrane dry, and press it in place over the bead of adhesive. As the individual half-cells are assembled, stack them on an end plate; then place the other end plate on top of the stack, and bolt the end plates together. Then add some water through the feed connection to prevent the shrinkage that would occur if the membranes were allowed to dry. Allow the adhesive to cure overnight, then dismantle and reassemble the device.

To assemble the ERID device, place the anode end plate in a horizontal position with the electrode facing upward. Place two electrode-gasket spacers (the ones without the entry ports) on the end plate, place a resin compartment on top, and fill the compartment completely level with the mixture of resin beads. Wipe the surface of the Teflon to remove moisture and resins, apply a bead of RTV adhesive around the perimeter, and, after wiping its surface dry, press a cation-exchange membrane in place. Then place two gasket spacers (see Figure 6) over the cation-exchange membrane, and add all the other resin beds, membranes, and spacers in similar fashion being careful that the stack is vertical and properly aligned. After the last cation-exchange membrane is in place, insert two electrode spacers, place the cathode end plate on top, and bolt the end plates together. Connect the solution lines, and place the ERID device in service.

APPENDIX D

SOURCES OF MATERIALS FOR ERID DEVICES

Membranes

Ionac Chemical Company
Division of Sybron Corporation
Birmingham, N.J. 08011

Plastics Department
E.I. du Pont de Nemours and Company
Wilmington, Delaware 19898

Tokuyama Soda Company, Ltd.
c/o Nissho-Iwai American Corporation
80 Pine Street
New York, N.Y. 10005

RAI Research Corporation
225 Marcus Boulevard
Hauppauge, L.I., N.Y. 11787

Resins

Ionac Chemical Company
Division of Sybron Corporation
Birmingham, N.J. 08011

Diamond Shamrock Chemical Company
P.O. Box 829
Redwood City, Cal. 94064

Rohm and Haas Company
Independence Mall West
Philadelphia, Pa. 19105

Bio-Rad Laboratories
32nd and Griffin Avenue
Richmond, Cal. 94804

Screens

Kressilk Products, Inc.
420 Saw Mill River Road
P.O. Box 112
Elmsford, N.Y. 10523

E.I. du Pont de Nemours & Co.
"Vexar" Sales
River Road
Buffalo, N.Y. 14207

TECHNICAL REPORT DATA
(Please read Instructions on the reverse before completing)

1. REPORT NO. EPA-600/1-77-035	2.	3. RECIPIENT'S ACCESSION NO.
4. TITLE AND SUBTITLE Electro-Regenerated Ion-Exchange Deionization of Drinking Water		5. REPORT DATE June 1977 Issuing Date
		6. PERFORMING ORGANIZATION CODE
7. AUTHOR(S) Thomas A. Davis		8. PERFORMING ORGANIZATION REPORT NO. SORI-EAS-77-069
9. Southern Research Institute Birmingham, AL 35205		10. PROGRAM ELEMENT NO. 1CC614B
		11. CONTRACT/GRANT NO. Contract No. 68-03-2209
12. SPONSORING AGENCY NAME AND ADDRESS Health Effects Research Laboratory, Cin-OH Office of Research and Development U.S. Environmental Protection Agency Cincinnati, Ohio 45268		13. TYPE OF REPORT AND PERIOD COVERED Final
		14. SPONSORING AGENCY CODE EPA/600/10
15. SUPPLEMENTARY NOTES		

16. ABSTRACT

This report presents the development of a device for removal of inorganic salts from drinking water to facilitate the subsequent concentration of organic solutes for bioassay. Prior attempts to concentrate the organic solutes by reverse osmosis (RO) resulted in precipitation of the inorganic salts. To prevent this precipitation, the drinking water is pretreated by Electro-Regenerated Ion-exchange Deionization (ERID). The ERID device developed for this purpose is essentially an electrodialyzer with thick depleting compartments packed with a mixture of anion- and cation-exchange resin beads. The resins provide a conductive medium for electrical transport of ions out of the demineralized water, through ion-exchange membranes, and into a concentrated waste stream.

Experiments with combined ERID-RO treatment demonstrated that, while greater than 90% demineralization was achieved with ERID, uncharged organic solutes tended to pass through the ERID device with little change in concentration. They could be concentrated by the RO unit if their molecular weights were sufficiently high to permit rejection by the RO membranes. Organic acids and bases tended to be removed from solution by the ion-exchange resins, but they could be recovered by rinsing the resins with acidic or basic solutions.

17. KEY WORDS AND DOCUMENT ANALYSIS

a. DESCRIPTORS	b. IDENTIFIERS/OPEN ENDED TERMS	c. COSATI Field/Group
Drinking water Deionization Ion exchanging Electrodialysis	Reverse Osmosis	13 B

18. DISTRIBUTION STATEMENT Unlimited Distribution	19. SECURITY CLASS *(This Report)* Unclassified	21. NO. OF PAGES 80
	20. SECURITY CLASS *(This page)* Unclassified	22. PRICE

EPA Form 2220-1 (9-73)

☆ U. S. GOVERNMENT PRINTING OFFICE: 1977-757-056/6432 Region No. 5-11