PB-241 927

ENERGY CONSUMPTION: THE CHEMICAL INDUSTRY

ENVIRONMENTAL PROTECTION AGENCY

APRIL 1975

DISTRIBUTED BY:

NTIS

National Technical Information Service
U. S. DEPARTMENT OF COMMERCE

PB 241 927

EPA-650/2-75-032-a

April 1975 Environmental Protection Technology Series

ENERGY CONSUMPTION:

THE CHEMICAL INDUSTRY

U.S. Environmental Protection Agency
Office of Research and Development
Washington, DC 20460

TECHNICAL REPORT DATA
(Please read Instructions on the reverse before completing)

1 REPORT NO EPA-650/2-75-032-a	2	3 RECIPIENT'S ACCESSION NO.
4 TITLE AND SUBTITLE Energy Consumption: The Chemical Industry		5 REPORT DATE April 1975 6. PERFORMING ORGANIZATION CODE
7 AUTHOR(S) John T. Reding and Burchard P. Shepherd		8. PERFORMING ORGANIZATION REPORT NO
9 PERFORMING ORGANIZATION NAME AND ADDRESS Dow Chemical, U.S.A. Texas Division Freeport, Texas 77541		10. PROGRAM ELEMENT NO. 1AB013; ROAP 21ADE-010 11. CONTRACT/GRANT NO 68-02-1329, Task 5
12 SPONSORING AGENCY NAME AND ADDRESS EPA, Office of Research and Development NERC-RTP, Control Systems Laboratory Research Triangle Park, NC 27711		13 TYPE OF REPORT AND PERIOD COVERED Final Task; 8/74-3/75 14. SPONSORING AGENCY CODE

15 SUPPLEMENTARY NOTES

16. ABSTRACT The report gives results of a study of energy consumption in the chemical industry. It analyzes energy-intensive steps or operations for manufacturing processes which produce 12 of the top 50 volume chemicals in the U.S. Results of the analyses are in the form of energy consumption block diagrams, energy-intensive equipment schematic diagrams, and tables that indicate the causes of energy losses, as well as possible conservation approaches. The most common energy-intensive operations in this industry are furnace operation, distillation, compression, refrigeration, electrolysis, drying/calcining, and evaporation. Energy losses in these operations could be reduced by: design, operation, market, and process modification; better insulation and maintenance; process integration; waste utilization; and research and development.

PRICES SUBJECT TO CHANGE

17. KEY WORDS AND DOCUMENT ANALYSIS

a DESCRIPTORS		b IDENTIFIERS/OPEN ENDED TERMS	c COSATI Field/Group
Energy	Compressors		13G
Consumption	Refrigerating		
Chemical Industry	Electrolysis		07A, 07D
Conservation	Drying		
Furnaces	Roasting		13A
Distillation	Evaporation		13H
Marketing	Wastes		05C

18 DISTRIBUTION STATEMENT Unlimited	19 SECURITY CLASS (This Report) Unclassified 20 SECURITY CLASS (This page) Unclassified	21. NO. OF PAGES

EPA Form 2220-1 (9-73)

EPA-650/2-75-032-a

ENERGY CONSUMPTION:

THE CHEMICAL INDUSTRY

by

John T. Reding and Burchard P. Shepherd

Dow Chemical, U. S. A.
Texas Division
Freeport, Texas 77541

Contract No. 68-02-1329, Task 5
Program Element No. 1AB013
ROAP No. 21ADE-010

EPA Project Officer: Irvin A. Jefcoat

Control Systems Laboratory
National Environmental Research Center
Research Triangle Park, North Carolina 27711

Prepared for

U. S. ENVIRONMENTAL PROTECTION AGENCY
OFFICE OF RESEARCH AND DEVELOPMENT
WASHINGTON, D. C. 20460

April 1975

1a/

EPA REVIEW NOTICE

This report has been reviewed by the National Environmental Research Center - Research Triangle Park, Office of Research and Development, EPA, and approved for publication. Approval does not signify that the contents necessarily reflect the views and policies of the Environmental Protection Agency, nor does mention of trade names or commercial products constitute endorsement or recommendation for use.

RESEARCH REPORTING SERIES

Research reports of the Office of Research and Development, U.S. Environmental Protection Agency, have been grouped into series. These broad categories were established to facilitate further development and application of environmental technology. Elimination of traditional grouping was consciously planned to foster technology transfer and maximum interface in related fields. These series are:

1. ENVIRONMENTAL HEALTH EFFECTS RESEARCH
2. ENVIRONMENTAL PROTECTION TECHNOLOGY
3. ECOLOGICAL RESEARCH
4. ENVIRONMENTAL MONITORING
5. SOCIOECONOMIC ENVIRONMENTAL STUDIES
6. SCIENTIFIC AND TECHNICAL ASSESSMENT REPORTS
9. MISCELLANEOUS

This report has been assigned to the ENVIRONMENTAL PROTECTION TECHNOLOGY series. This series describes research performed to develop and demonstrate instrumentation, equipment and methodology to repair or prevent environmental degradation from point and non-point sources of pollution. This work provides the new or improved technology required for the control and treatment of pollution sources to meet environmental quality standards.

This document is available to the public for sale through the National Technical Information Service, Springfield, Virginia 22161.

Publication No. EPA-650/2-75-032-a

CONTENTS

		Page
		ii
List of Figures		v
List of Tables		vii
Sections		
I	Conclusions	1
II	Recommendations	2
III	Introduction	3
IV	Energy Consumption within the Chemical Industry	5
	A. Chlorine by Electrolysis of Brine	7
	B. Caustic Soda Concentration by Evaporation of Water	7
	C. Ethylene by Ethane Pyrolysis	13
	D. Ethylbenzene by Alkylation of Benzene with Ethylene	21
	E. Styrene by Dehydrogenation of Ethylbenzene	21
	F. Phenol/Acetone by Oxidation of Cumene and Cleavage of Cumene Hydroperoxide	29
	G. Cumene by Alkylation of Benzene with Propylene	37
	H. Sodium Carbonate by the Solvay Process	37
	I. Carbon Black by the Furnace Process	46
	J. Oxygen/Nitrogen by Air Distillation	46
	K. Operational and Design Problems of Energy Intensive Equipment	56

CONTENTS (continued)

		Page
	L. Operational and Design Problems of Heat Transfer Equipment	56
	M. Chemical Industry Energy Conservation Study Summary	56
V	Bibliography	61
VI	Glossary of Abbreviations	62
VII	Appendix	63

FIGURES

No.		Page
1	Chlorine Energy Consumption Diagram	8
2	Chlorine Energy Intensive Equipment Diagram - Electrolytic Cell	9
3	Caustic Soda Energy Consumption Diagram	11
4	Caustic Soda Energy Intensive Equipment Diagram - Evaporators	12
5	Ethylene Energy Consumption Diagram	15
6	Ethylene Energy Intensive Equipment Diagram - Pyrolysis Furnace and Waste Heat Recovery Equipment	17
7	Ethylene Energy Intensive Equipment Diagram - Compressors	18
8	Ethylene Energy Intensive Equipment Diagram - Propylene and Ethylene Refrigeration Systems	19
9	Ethylene Process Refrigeration	20
10	Ethylbenzene Energy Consumption Diagram	24
11	Ethylbenzene Energy Intensive Equipment Diagram - Distillation Columns	25
12	Styrene Energy Consumption Diagram	27
13	Styrene Energy Intensive Equipment Diagram - Superheater, Reactor, and Cooling Equipment	28
14	Styrene Energy Intensive Equipment Diagram - Distillation Columns	30
15	Phenol/Acetone Energy Consumption Diagram	32
16	Phenol/Acetone Energy Intensive Equipment Diagram - Air Compressors	33

FIGURES (continued)

		Page
17	Phenol/Acetone Energy Intensive Equipment Diagram - Cumene Hydroperoxide Distillation Column	34
18	Phenol/Acetone Energy Intensive Equipment Diagram - Acetone Distillation Columns	35
19	Phenol/Acetone Energy Intensive Equipment Diagram - Phenol Distillation Columns	36
20	Phenol/Acetone Energy Intensive Equipment Diagram - Cracking Furnace	38
21	Cumene Energy Consumption Diagram	40
22	Cumene Energy Intensive Equipment Diagram - Distillation Columns	41
23	Sodium Carbonate Energy Consumption Diagram	43
24	Sodium Carbonate Energy Intensive Equipment Diagram - Lime Kiln	44
25	Sodium Carbonate Energy Intensive Equipment Diagram - Compressors	45
26	Sodium Carbonate Energy Intensive Equipment Diagram - Calciner	47
27	Carbon Black Energy Consumption Diagram	49
28	Carbon Black Energy Intensive Equipment Diagram - Reactor and Waste Heat Recovery Equipment	50
29	Carbon Black Energy Intensive Equipment Diagram - Dryer	51
30	Oxygen/Nitrogen Energy Consumption Diagram	53
31	Oxygen/Nitrogen Energy Intensive Equipment Diagram - Compressors	54
32	Oxygen/Nitrogen Energy Intensive Diagram - Distillation Column	55

TABLES

No.		Page
1	Chlorine Energy Conservation Approaches	10
2	Caustic Soda Energy Conservation Approaches	14
3	Ethylene Energy Conservation Approaches	22
4	Ethylbenzene Energy Conservation Approaches	26
5	Styrene Energy Conservation Approaches	31
6	Phenol Energy Conservation Approaches	39
7	Cumene Energy Conservation Approaches	42
8	Sodium Carbonate Energy Conservation Approaches	48
9	Carbon Black Energy Conservation Approaches	52
10	Oxygen/Nitrogen Energy Conservation Approaches	57
11	Operational and Design Problems in Energy Intensive Equipment	58
12	Operational Problems with Heat Transfer Equipment	59
13	Chemical Industry Energy Conservation Study Summary	60

SECTION I

CONCLUSIONS

Most of the energy consumption within the chemical industry is concentrated in a relatively few operations. These include furnace combustion, distillation, compression, electrolysis, drying, and evaporation. Avoidable energy losses occur in all of the above operations. Some of the losses can be eliminated by employing conservation techniques. These inlcude:

- Design modifications to increase waste heat recovery from furnaces.
- Design modifications to allow lower energy input into distillation columns.
- Proper maintenance practices to prevent losses in many places.
- Process integration to obtain maximum energy from steam.
- Operation modifications to avoid losses in electrolytic cells.
- Greater use of insulation to limit heat losses.
- Research and development to develop processes with increased conversions or yields.
- Waste utilization to prevent the loss of the fuel value of waste streams.

SECTION II

RECOMMENDATIONS

The energy conservation approaches suggested in this report could be further defined and specified in more detail. Unanswered questions which should be considered include:

- The economic feasibility of the conservation approaches.
- The difficulty of implementing the approaches.

SECTION III

INTRODUCTION

Purpose

The purpose of the total task is to provide a breakdown of energy consumption within the six primary industrial categories - primary metals, chemicals, petroleum, food, paper, and stone, clay, glass, concrete. The purpose of the portion of the total task covered by this report is to provide a breakdown of energy consumption within the chemical industry only. This breakdown can give direction to subsequent conservation efforts.

Scope

This report analyzes high energy consumption operations in the chemical industry (SIC 28) and identifies the principal energy intensive equipment. It points out causes of energy losses in these operations, the approximate magnitude of the losses, and possible approaches to decrease these losses.

General Background

The National Academy of Engineering has been commissioned by the Environmental Protection Agency to conduct a comprehensive assessment of the current status and future prospects of sulfur oxides control methods and strategies. The agreement between the Environmental Protection Agency and the National Academy of Engineering states explicitly that special data collection projects may be required to provide the National Academy of Engineering panel with the background necessary for viewing all aspects of the problem in perspective. This report is one segment of the data collection project associated with the National Academy of Engineering assessment.

One method of limiting the amount of SO_x emissions arising from energy conversion is simply to decrease fuel use through energy conservation. In the year 1968, it has been reported that 41.2 percent of the total energy consumption in the United States was in the industrial sector. More specifically, 28 percent of the national energy consumption was in the six industrial categories encompassed by this total task. Conservation efforts directed toward industries in these six categories should obtain the greatest impact.

General Approach

Ten chemical processes which result in the production of 12 of the top 50 volume chemicals were reviewed.

These processes are:

- Chlorine by electrolysis of brine
- Caustic soda concentration by evaporation of water
- Ethylene by pyrolysis of ethane
- Ethylbenzene by alkylation of benzene with ethylene
- Styrene by dehydrogenation of ethylbenzene
- Phenol/acetone by oxidation of cumene and then cleavage of cumene hydroperoxide
- Cumene by alkylation of benzene with propylene
- Sodium carbonate by the Solvay process
- Carbon black by the furnace process
- Oxygen/nitrogen by distillation of air

Energy consumption block diagrams have been drawn for each process. These diagrams indicate the operations within the processes where large amounts of energy are used. The energy intensive operations have been further analyzed. Schematic diagrams which show the physical and operational appearance of the energy consuming equipment have been prepared. Causes of energy losses in the energy intensive operations, the approximate magnitude of the losses, and possible conservation approaches have been determined.

SECTION IV

ENERGY CONSUMPTION WITHIN THE CHEMICAL INDUSTRY

In order to analyze energy consumption within the chemical industry, it was necessary to select a specific manufacturing process for each chemical in the study. Two decisions had to be made:

- A production route or overall production process had to be chosen. This is not automatic becuase most chemicals are manufactured by more than one process. However, the obvious choice in each case was to select the dominant process.

- A certain level of production technology had to be chosen. Although energy consumption for many chemical manufacturing processes is high, the low cost of energy in the United States in the past made the use of a large amount of energy conservation technology uneconomical. The recent increases in energy costs, however, have led to the construction of plants that produce chemicals using less energy than older plants. The process technology level for this study is the best available to the general public. Much proprietary information on more modern plants is not available. It is therefore believed that some of the energy conservation approaches suggested in this study may already be in use in new plants.

Estimates of the total 1973 energy requirements to produce each chemical studied are included on the energy consumption block diagrams. The estimates are divided into two portions:

- Process energy consumption excluding feedstock energy. Feedstock energy refers to first use of fuel and petroleum products within the industrial chemicals group.

- Feedstock or, sometimes, feedstock-plus-process-energy consumption. Any fuel generation in the process is included in this figure as a negative number or if fuel generation is greater than feedstock consumption, it is so indicated.

These estimates are approximate and are intended only to show the order of magnitude of energy requirements to produce the chemicals.

The type of energy used to produce the chemicals is also indicated on the energy diagrams. Different types of energy are not equivalent. Approximately 3 Btu of fuel energy are usually required to obtain 1 Btu of electrical energy. Approximately 1.1 to 1.3 Btu of fuel energy are required to obtain 1 Btu of steam energy.

Energy values in all figures and tables are expressed in terms of energy per unit weight of product. In the cases of the phenol/acetone process and the oxygen/nitrogen process, phenol and oxygen are considered to be the products. In the case of the 50 percent caustic soda process, the energy is expressed in terms of energy per unit weight of 100 percent caustic soda.

The tables showing energy conservation approaches give estimates of losses or rejected heat in operations in the process and in the overall process. The losses or rejected heat listed in the operations are additive. The losses listed in the overall process often overlap and are not additive.

Energy conservation approaches include:

- insulation
- design modification
- maintenance
- process integration
- research and development
- operation modification
- market modification
- process modification
- waste utilization

In many cases a more specific explanation of the conservation approach is listed along with the approach. An explanation of the conservation approaches is included in the appendix for those instances where the meaning of the term may be vague.

A. Chlorine by Electrolysis of Brine

Figure 1 shows the major steps in the chlorine manufacturing process. The process uses diaphram type electrolytic cells. The major step from an energy consumption viewpoint is the electrolytic separation of the brine into chlorine, hydrogen, and cell liquor (dilute caustic solution). This operation accounts for 85 to 90 percent of the total energy consumption in the process.

Figure 2 shows the general arrangement of the chlorine electrolytic cell. Chlorine is evolved from the cell anode while hydrogen and cell liquor come from the cathodic compartment. The cell diaphragm separates the anodic and cathodic compartments.

Table 1 indicates the causes of energy losses in the electrolytic brine separation operation. It also shows the approximate magnitude of the losses and possible energy conservation approaches.

B. Concentration of Caustic Soda by Evaporation of Water

Figure 3 shows the major steps in the manufacture of caustic soda. This process concentrates the cell liquor from the chlorine diaphragm cell by evaporating water from the dilute caustic solution. Approximately 80 percent of the total energy consumption occurs in the water evaporation operation which produces 50 percent caustic soda.

Figure 4 shows a typical caustic soda evaporation operation. Cell liquor enters the third effect of a three effect evaporation system and 50 percent caustic soda leaves the first effect. Sodium chloride in the cell liquor is separated from the caustic soda solution after the solution leaves the first and second effect evaporators. Steam is the source of heat.

Figure 1. Chlorine energy consumption diagram
[1973 USA production: 9.35×10^9 kg (20.6×10^9 lb)]
[1973 energy consumption (primarily electricity): 3300 MW (100×10^{12} Btu)]
[1973 fuel generation (H_2): 1000 MW (30×10^{12} Btu)]

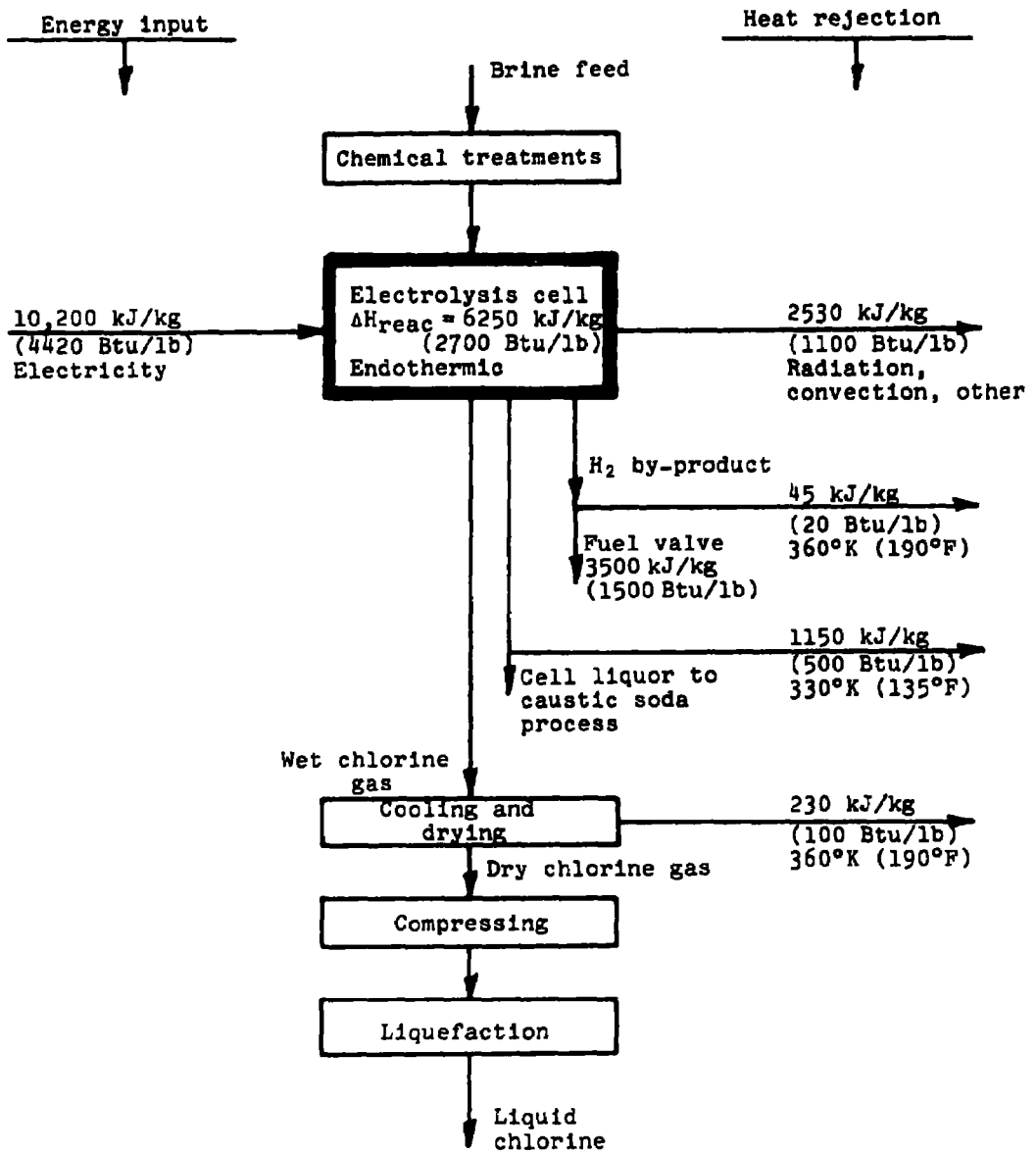

Figure 2. Chlorine energy intensive equipment diagram - electrolytic cell
[Rejected heat: Radiation, convection, other - 2530 kJ/kg (1100 Btu/lb)
Hot H_2 by-product - 45 kJ/kg (20 Btu/lb) at 360°K (190°F)
Hot Cl_2 product - 230 kJ/kg (100 Btu/lb) at 360°K (190°F)
Warm cell liquor - 1150 kJ/kg (500 Btu/lb) at 330°K (135°F)]

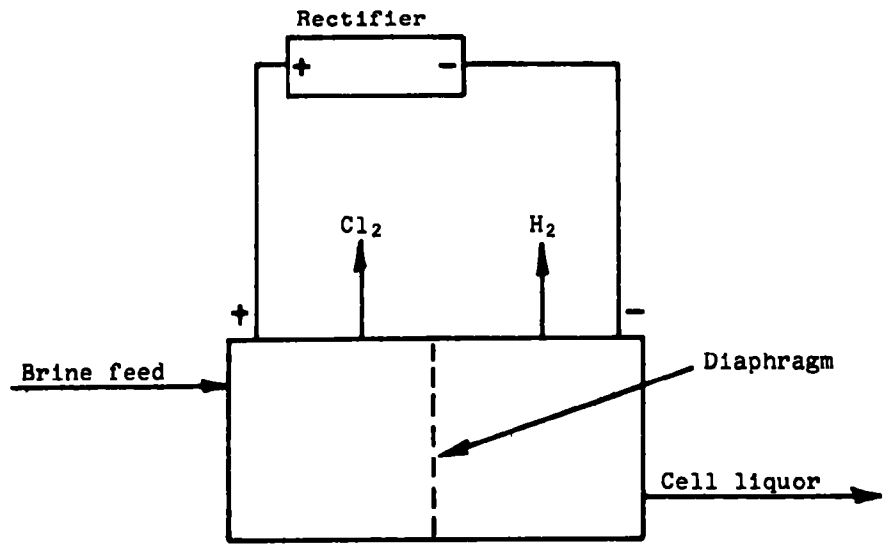

Electrolytic cell

Table 1. CHLORINE ENERGY CONSERVATION APPROACHES

Causes of energy losses	Approximate magnitude of losses	Energy conservation approaches
1. Electrolysis cell		
a. Anode overvoltage	460 kJ/kg (200 Btu/lb)	Operation modification (lower current density) Research & development (improve anode material)
b. Cathode overvoltage	1400 kJ/kg (600 Btu/lb)	Operation modification (lower current density) Research & development (improve cathode material)
c. Voltage drop across diaphragm	580 kJ/kg (250 Btu/lb)	Design modification (thinner diaphragm)
d. Voltage drop in electrolyte	460 kJ/kg (200 Btu/lb)	
e. Voltage drop in anode-cathode assemblies	280 kJ/kg (120 Btu/lb)	Design modification
f. Oxygen evolution on anode	230 kJ/kg (100 Btu/lb)	Research & development (improve anode material)
g. Unaccounted for	580 kJ/kg (250 Btu/lb)	--
2. Overall process		
a. Lack of heat recovery from H_2, Cl_2, and cell liquor streams	1425 kJ/kg (620 Btu/lb)	Design modification (waste heat recovery)
b. Radiation, convection, other heat losses from electrolysis cell	2530 kJ/kg (1100 Btu/lb)	Insulation
c. Failure to use H_2 by-product as fuel	3500 kJ/kg (1500 Btu/lb)	Waste utilization

NOTE: Electrolysis cell losses are electrical. The fuel value of these losses would be approximately three times as large as the values listed.

Figure 3.* Caustic soda energy consumption diagram
[1973 USA production: 9.70 x 10^9 kg (21.4 x 10^9 lb)]
[1973 energy consumption (primarily steam): 2700 MW
(80 x 10^{12} Btu)]

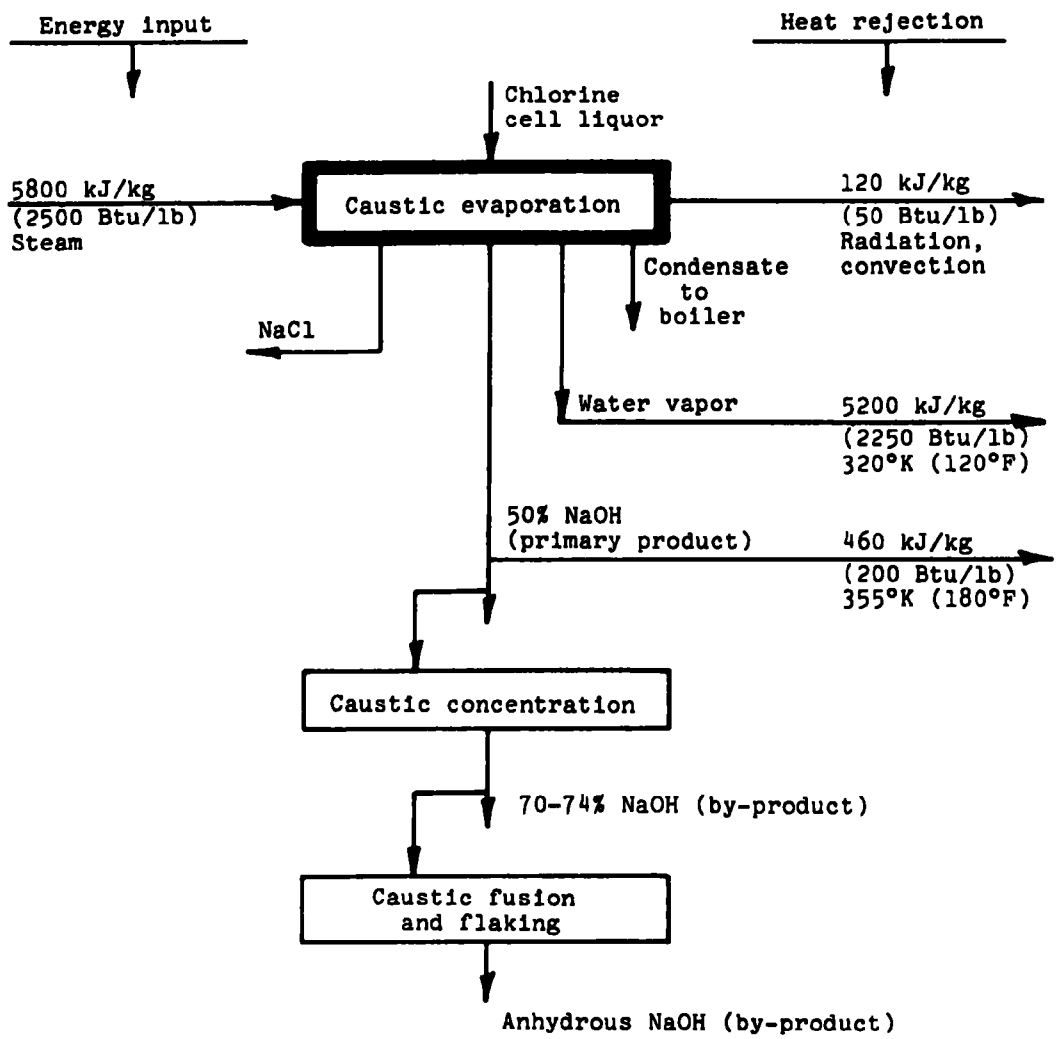

* Weight of products as 100% caustic soda.
Energy values are in terms of energy per unit weight of caustic soda as 100% caustic soda.

Figure 4.* Caustic soda energy intensive equipment diagram - evaporators
[Rejected heat: Radiation, convection, other - 120 kJ/kg (50 Btu/lb)
Water vapor - 5200 kJ/kg (2250 Btu/lb) at 320°K (120°F)
Hot product - 460 kJ/kg (200 Btu/lb) at 355°K (180°F)]

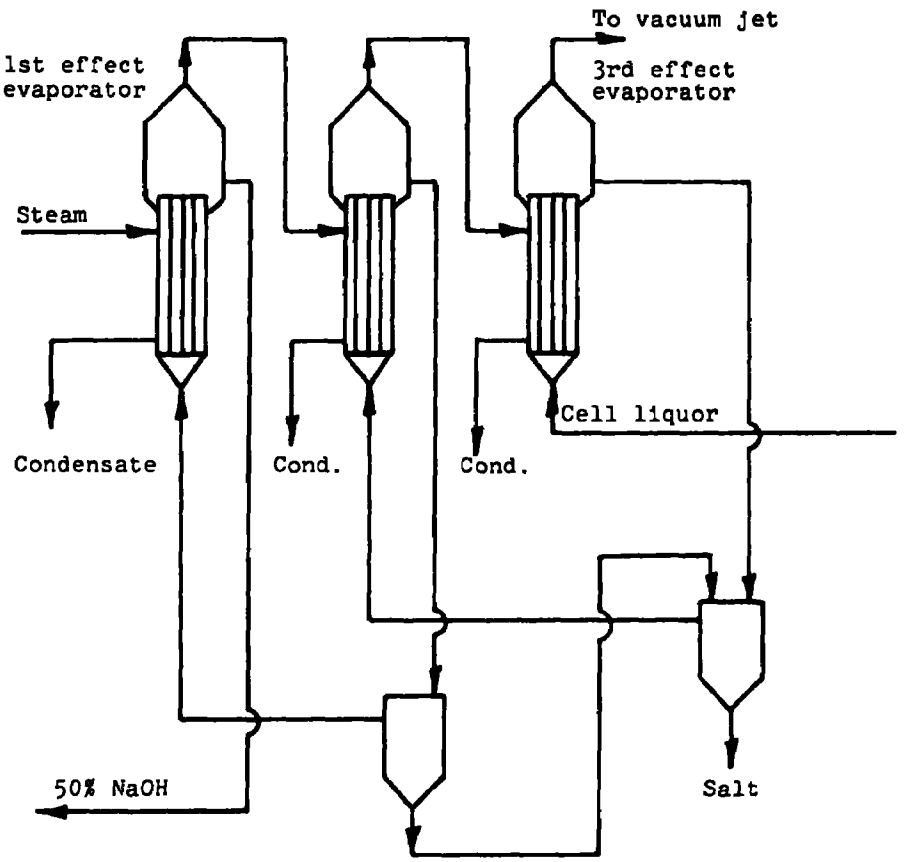

Evaporators

* Energy values are in terms of energy per unit weight of caustic soda as 100% caustic soda.

Table 2 shows the causes of energy losses in the evaporation of water from cell liquor. It also shows the approximate magnitude of the losses and some possible energy conservation approaches.

C. Ethylene by Ethane Pyrolysis

Figure 5 shows major steps in an ethylene manufacturing process that uses ethane as the feedstock. Major steps from an energy consumption viewpoint are pyrolysis of the feed, compression of the gases from the pyrolysis furnace, and liquefaction of the gases before distillation. Both the compression and liquefaction by refrigeration are necessary to allow separation by distillation of the components in the furnace exit stream. The pyrolysis, compression, and refrigeration operations account for approximately 90 percent of the total energy consumption in the manufacture of ethylene.

Figure 6 shows the furnace and associated waste heat recovery equipment in a modern ethylene plant. Waste heat is recovered from furnace stack gases and from hot process gases leaving the furnace.

Figure 7 shows the compression of process gases from the pyrolysis furnace. Intercooling and gas-liquid separation are necessary between each stage of compression. Acetylene hydrogenation is shown between the third and fourth compression stages.

Figures 8 and 9 show a refrigeration system for a modern ethylene plant. Figure 8 shows the compression of propylene and ethylene refrigerants. Various levels of compression and expansion lead to a number of temperature levels that are needed in the distillation columns. The system is referred to as a cascade system because some of the propylene refrigerant is used to cool the ethylene refrigerant which is then used to cool several process streams. An energy saving feature of the scheme in Figure 8 is the use of the coldness in the bottom streams from the demethanizer and C_2 splitter distillation columns to cool a portion of the propylene refrigerant. Figure 9 shows the refrigeration of process gases by cold process streams leaving distillation columns, by propylene and ethylene refrigerants, and by the gases in the demethanizer overhead stream. The demethanizer overhead stream is usable as a coolant because it has been supercooled by passing through a turbo-expander. Figure 9 also shows

Table 2. CAUSTIC SODA ENERGY CONSERVATION APPROACHES

Causes of energy losses	Approximate magnitude of losses	Energy conservation approaches
1. Rejected heat		
a. Radiation, convection	120 kJ/kg (50 Btu/lb)	Insulation Maintenance
b. Water vapor from last effect	5200 kJ/kg (2250 Btu/lb)	Design modification (waste heat recovery)
c. Hot product	460 kJ/kg (200 Btu/lb)	Design modification (waste heat recovery
2. Overall process		
a. Use of excess steam	1400 kJ/kg (600 Btu/lb)	Design modification (add additional effect to evaporation operation)
b. Low NaOH concentration in cell liquor	2300 kJ/kg (1000 Btu/lb)	Research & development (ionic membrane diaphragm)
c. Production of anhydrous NaOH	230 kJ/kg (100 Btu/lb)	Market modification (substitute 70-74% NaOH for anhydrous)

Note: Energy values are in terms of energy per unit weight of caustic soda as 100% caustic soda.

Figure 5.* Ethylene energy consumption diagram
[1973 USA production: 10.1 x 10^9 kg (22.4 x 10^9 lb)]
[1973 process energy consumption (primarily natural gas plus H_2, CH_4 gases generated in the process): 9300 MW (280 x 10^{12} Btu)]
[1973 total energy consumption (feedstock plus process requirements) 23,000 MW (700 x 10^{12} Btu)]

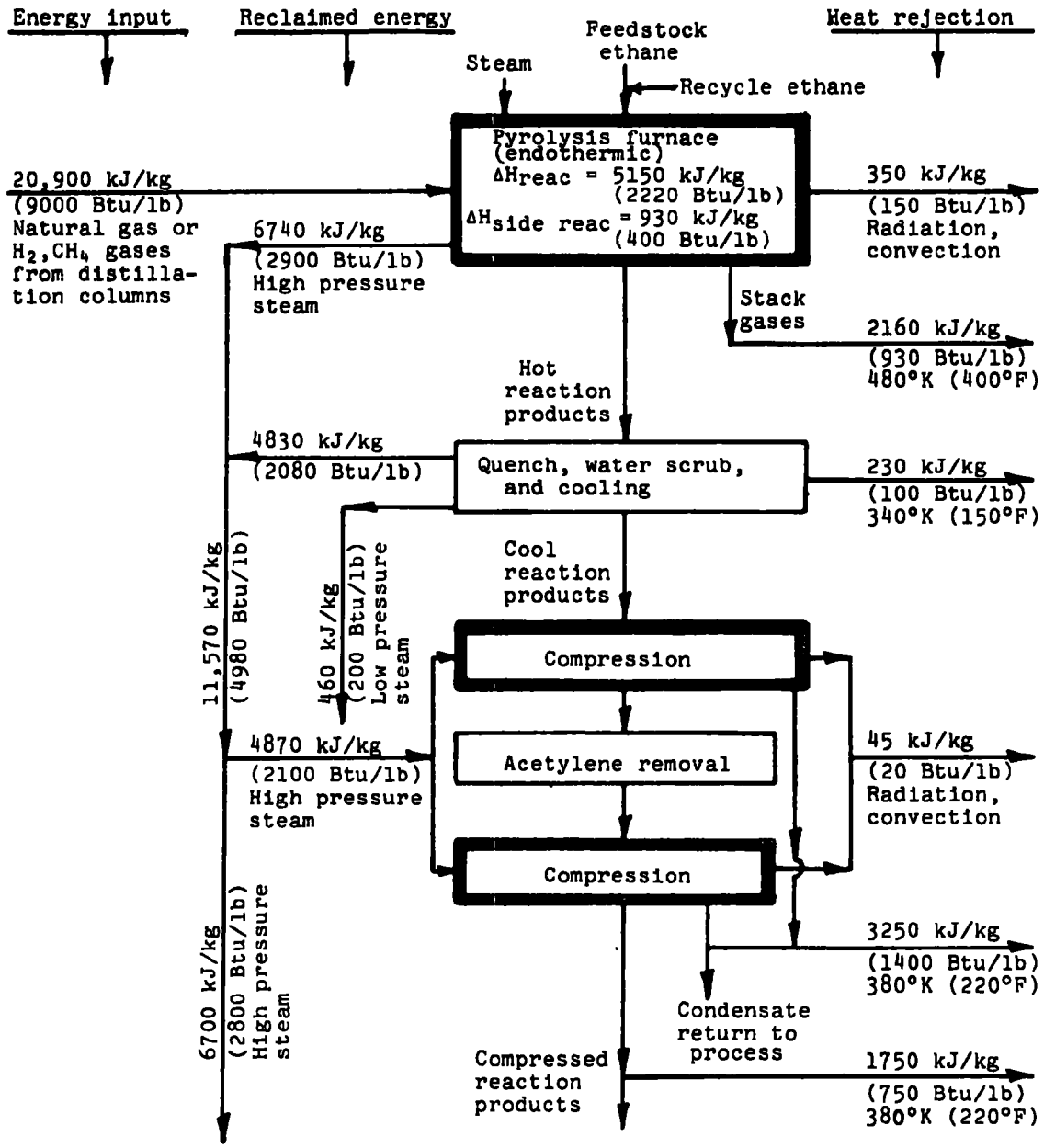

* 65% conversion of ethane in furnace with an 80% yield of ethylene.

(continued on next page)

Figure 5. (Continued).

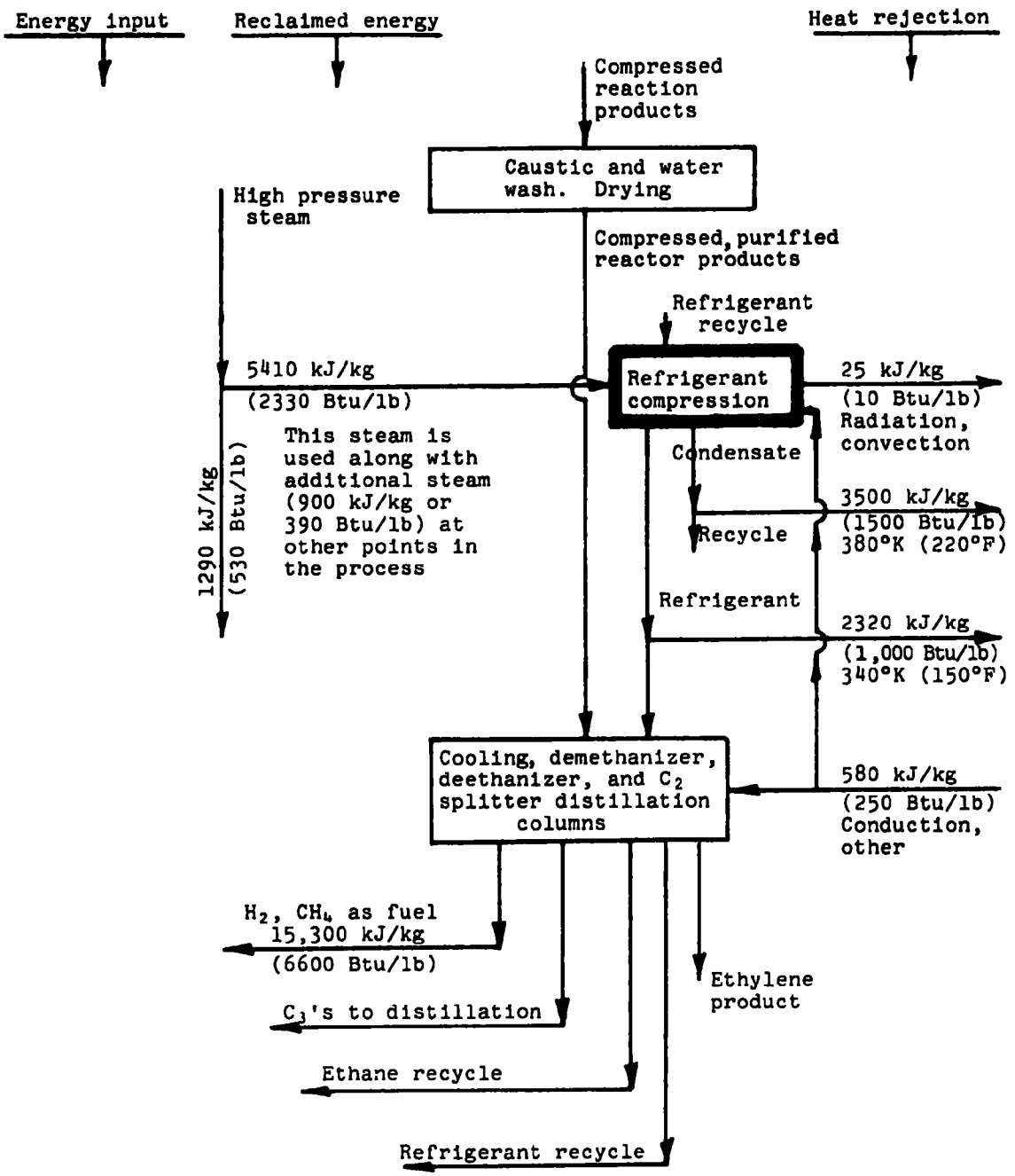

Figure 6. Ethylene energy intensive equipment diagram-pyrolysis furnace and waste heat recovery equipment
[Rejected heat: Radiation, convection - 350 kJ/kg (150 Btu/lb)
Stack gases - 2160 kJ/kg (930 Btu/lb) at 480°K (400°F)]

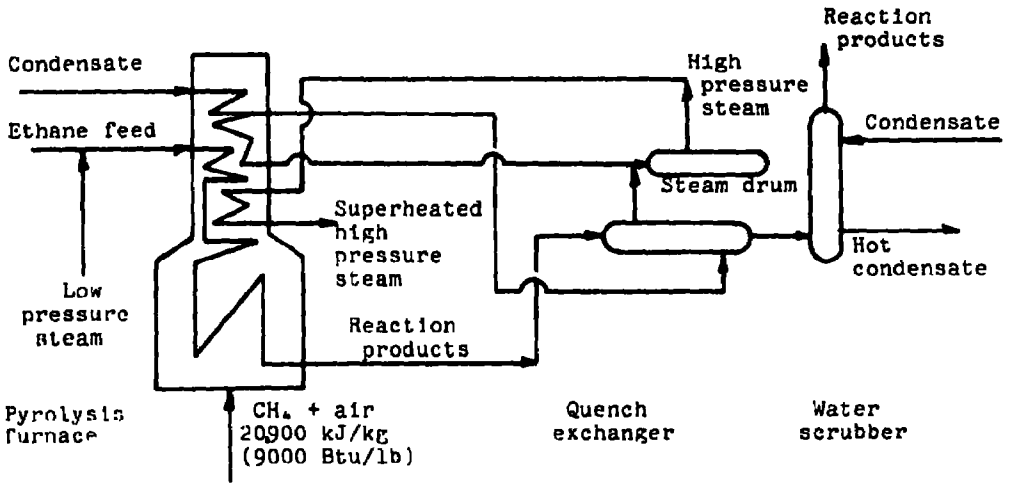

Furnace energy balance

Energy input to furnace	20900 kJ/kg	(9000 Btu/lb)
Heats of reaction		
Ethylene	5150 kJ/kg	(2220 Btu/lb)
Side reactions	930 kJ/kg	(400 Btu/lb)
Energy change from feed to product	5570 kJ/kg	(2400 Btu/lb)
Energy transferred to steam	6740 kJ/kg	(2900 Btu/lb)
Energy lost	2510 kJ/kg	(1080 Btu/lb)

Waste heat recovery

Quench exchanger	4830 kJ/kg	(2080 Btu/lb)
Water scrubber	460 kJ/kg	(200 Btu/lb)

Figure 7. Ethylene energy intensive equipment diagram - compressors
[Rejected heat: Radiation, convection - 45 kJ/kg (20 Btu/lb)
Condensate (vapor) - 3100 kJ/kg (1350 Btu/lb) at 380°K (220°F)
Hot compressed reaction products - 1850 kJ/kg (800 Btu/lb) at 380°K (220°F)]

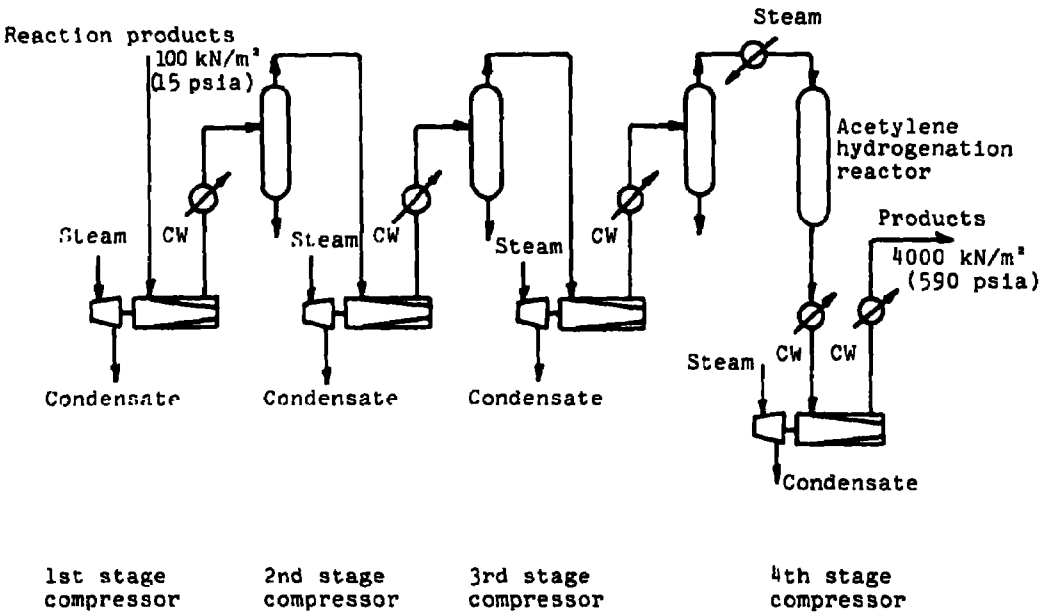

Steam input to each turbine = 1220 kJ/kg (525 Btu/lb)

Figure 8. Ethylene energy intensive equipment diagram - propylene and ethylene refrigeration systems
[Rejected heat: Radiation, convection - 25 kJ/kg (10 Btu/lb)
Condensate (vapor - 3500 kJ/kg (1500 Btu/lb) at 380°K (220°F)
Hot refrigerant streams - 2320 kJ/kg (1000 Btu/lb) at -340°K (-150°F)]

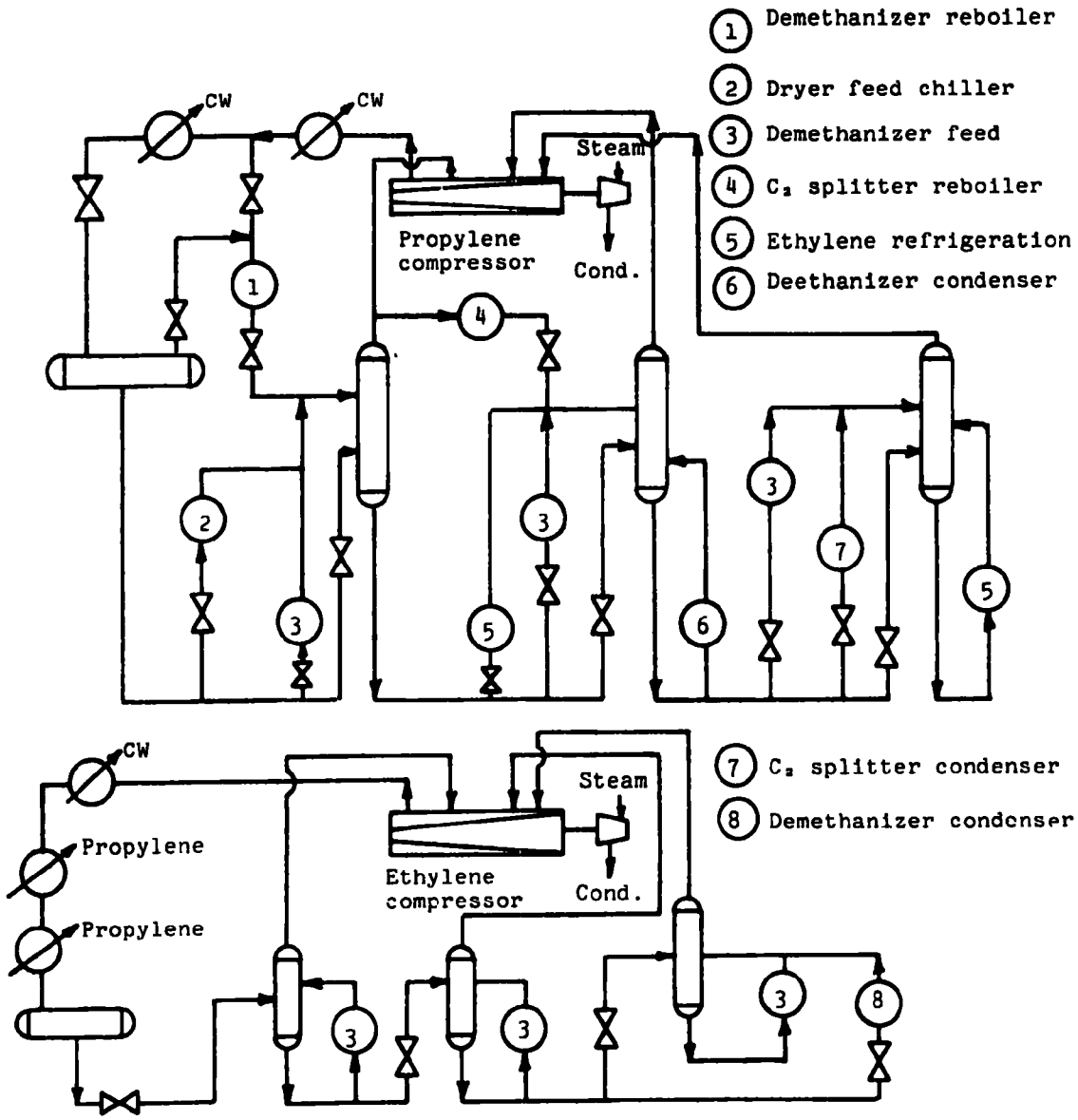

Figure 9. Ethylene process refrigeration

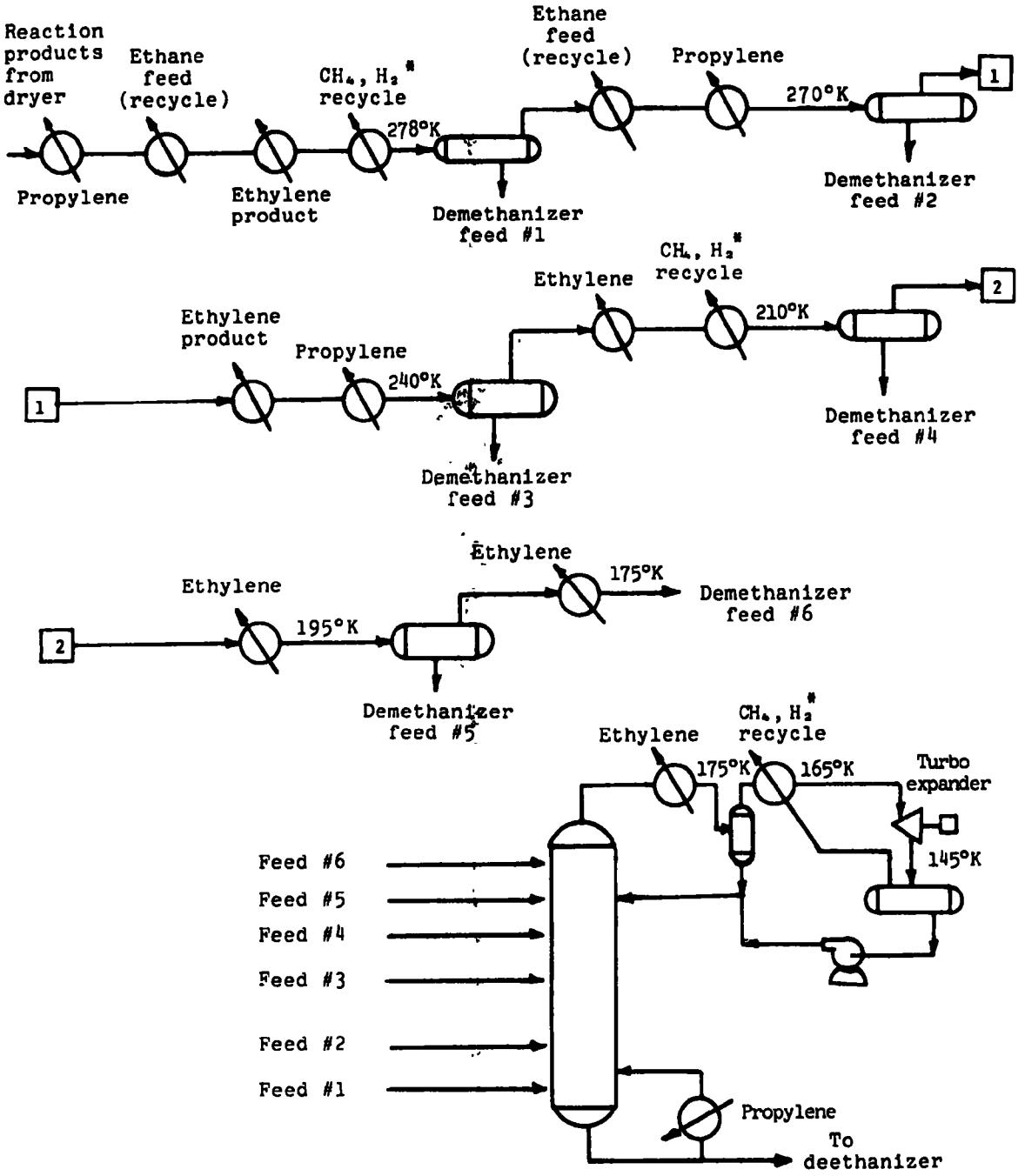

* Burned in pyrolysis furnace.

the efficient practice of multi-feeding the demethanizer column. In effect the feed stream has been partially separated before it enters the demethanizer column.

Table 3 shows the causes of energy losses in the pyrolysis operation, compression operation, refrigeration operation, and overall process. It also shows the approximate magnitude of the losses and some possible energy conservation approaches.

D. Ethylbenzene by Alkylation of Benzene with Ethylene

Figure 10 shows the major steps in the ethylbenzene manufacturing process. The process illustrated uses an $AlCl_3$ catalyst to promote alkylation of benzene with ethylene. The major step from an energy consumption viewpoint is the separation of the reaction exit stream into components by distillation. This operation accounts for approximately 75 percent of the total energy consumption in the production of ethylbenzene.

Figure 11 shows the distillation operation. Steam provides energy for the three primary columns - the tar removal column, the benzene column, and the ethylbenzene column.

Table 4 shows the causes of energy losses in the distillation operation and the overall process. It also shows the approximate magnitude of the losses and possible conservation approaches.

E. Styrene by Dehydrogenation of Ethylbenzene

Figure 12 shows the major steps in the styrene manufacturing process. This process uses a metal oxide catalyst to promote the dehydrogenation of ethylbenzene at high temperature. Major energy consumption operations are the heating of reactants plus steam and the separation of the reactor exit stream into components by distillation. These operations account for more than 90 percent of the total energy consumption in the manufacture of styrene.

Figure 13 shows the steam superheating, reaction, heat recovery, and desuperheating operations. Steam, natural gas, and waste process gas are used to provide energy for the reaction. The large amount of steam is also

Table 3. ETHYLENE ENERGY CONSERVATION APPROACHES

Causes of energy losses	Approximate magnitude of losses	Energy conservation approaches
1. Furnace losses		
a. Hot stack gases	2160 kJ/kg (930 Btu/lb)	Design modification (waste heat recovery)
b. Radiant and convection heat losses	350 kJ/kg (150 Btu/lb)	Insulation Maintenance
2. Heat rejection in compression operation		
a. Unavailability of latent heat in steam to drive the turbine	3250 kJ/kg (1400 Btu/lb)	Process integration (find use for the low pressure steam exiting the turbine)
b. Loss of heat imparted to compressed gases	1750 kJ/kg (750 Btu/lb)	Design modification (waste heat recovery)
c. Radiation, convection	45 kJ/kg (20 Btu/lb)	Insulation
3. Heat rejection in refrigeration operation		
a. Unavailability of latent heat in steam to drive the turbine	3500 kJ/kg (1500 Btu/lb)	Process integration (find use for the low pressure steam exiting the turbine)
b. Loss of heat imparted to compressed refrigerant	2320 kJ/kg (1000 Btu/lb)	Design modification (waste heat recovery)
c. Radiation, convection	25 kJ/kg (10 Btu/lb)	Insulation
4. Overall process		
a. Low conversion of ethane to products	8100 kJ/kg (3500 Btu/lb)	Research & development

Table 3 (continued). ETHYLENE ENERGY CONSERVATION APPROACHES

Causes of energy losses	Approximate magnitude of losses	Energy conservation approaches
b. Low yield of ethylene from ethane	4600 kJ/kg (2000 Btu/lb)	Research & development
c. Non-isothermal compression of process gases and refrigerants	580 kJ/kg (250 Btu/lb)	--
d. Non-isentropic compression of process gases and refrigerants	700 kJ/kg (300 Btu/lb)	Maintenance
e. Excessive temperature differences between cold and hot fluids in the refrigeration operation	460 kJ/kg (200 Btu/lb)	Design modification (use more heat exchange surface) Maintenance Insulation
f. Non-optimization of distillation-refrigeration-compression scheme	460 kJ/kg (200 Btu/lb)	Design modification

Figure 10. Ethylbenzene* energy consumption diagram
[1973 USA production: 2.94 x 10^9 kg (6.50 x 10^9 lb)]
[1973 process energy consumption (primarily steam): 430 MW (13 x 10^{12} Btu)]
[1973 total energy consumption (feedstock plus process): 3150 MW (94 x 10^{12} Btu)]

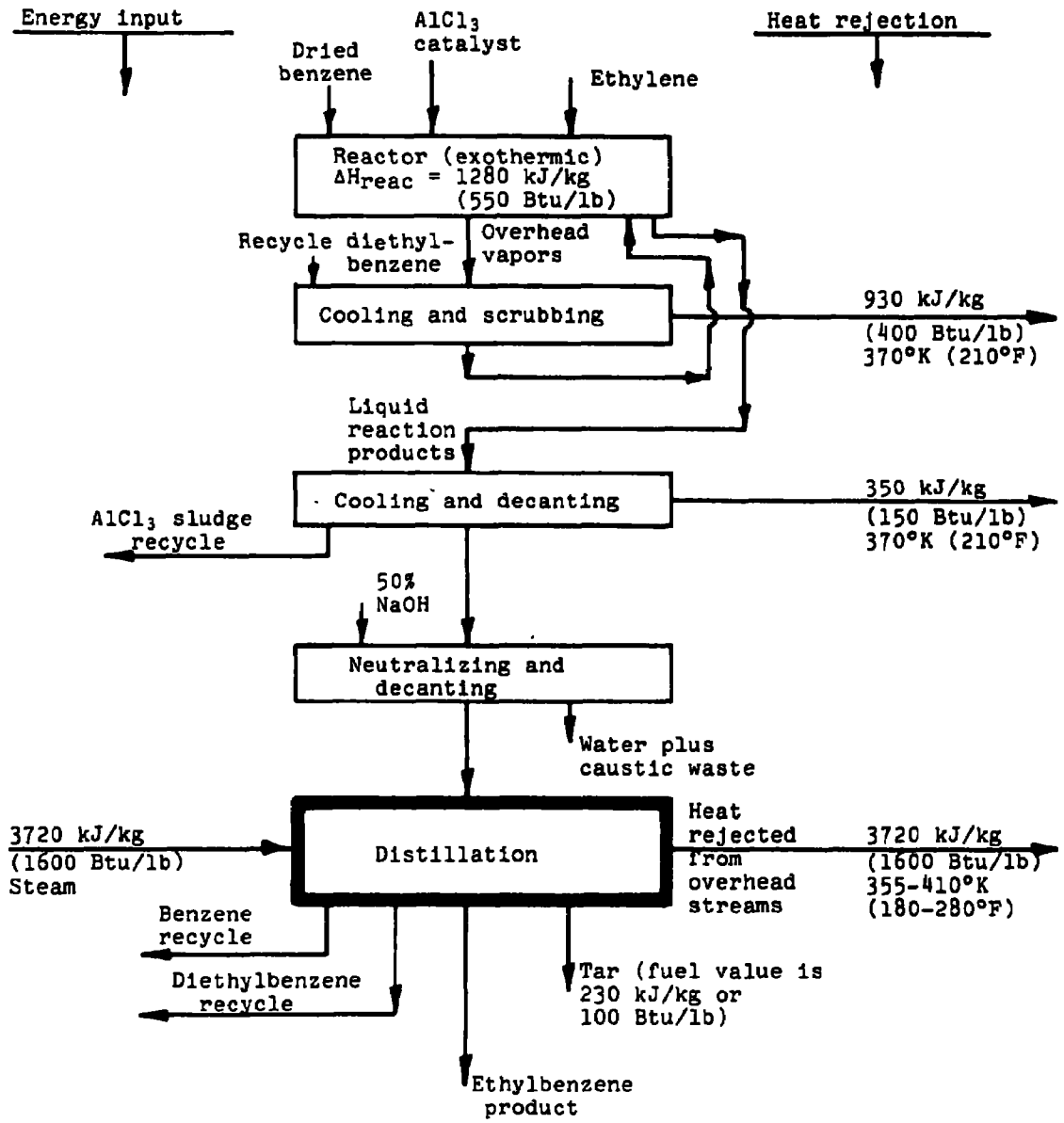

* 40% conversion of benzene to products.
95% selectivity to ethylbenzene
99% conversion of ethylene to products

Figure 11. Ethylbenzene energy intensive equipment diagram - distillation [Rejected heat: From overhead streams - 3720 kJ/kg (1600 Btu/lb) at 355-410°K (180-280°F)]

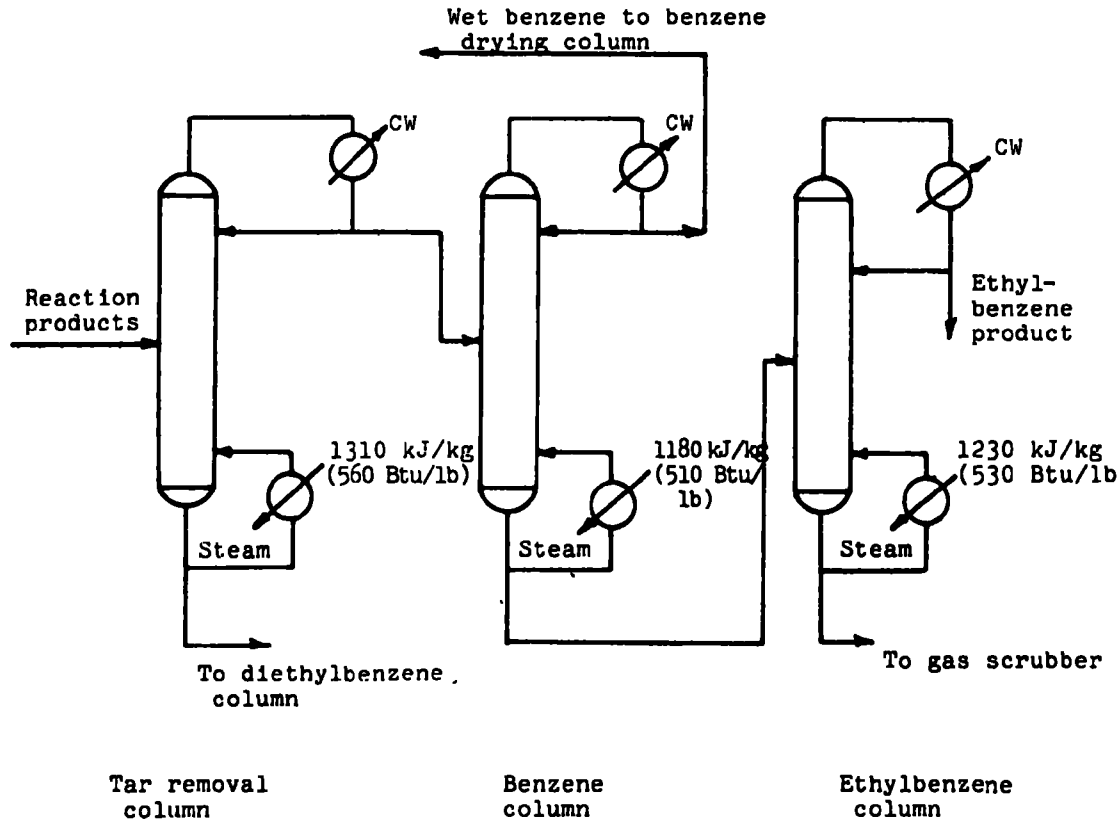

Table 4. ETHYLBENZENE ENERGY CONSERVATION APPROACHES

Causes of energy losses	Approximate magnitude of losses	Energy conservation approaches
1. Rejected heat		
a. Cooling of reactor exit streams	1280 kJ/kg (550 Btu/lb)	Design modification (waste heat recovery)
b. Cooling of overhead streams from distillation columns	3720 kJ/kg (1600 Btu/lb)	Design modification (waste heat recovery)
2. Overall process		
a. Failure to use tar as fuel	230 kJ/kg (100 Btu/lb)	Waste utilization
b. Low conversion of benzene	1850 kJ/kg (800 Btu/lb)	Research & development
c. High reflux ratios in distillation columns	700 kJ/kg (300 Btu/lb)	Design modification (more plates)

Figure 12. Styrene* energy consumption diagram
[1973 USA production: 2.72 x 10^9 kg (6.01 x 10^9 lb.)]
[1973 energy consumption (primarily natural gas, steam): 2600 MW (78 x 10^{12} Btu)]
[1973 fuel generation (waste gases, residue): 730 MW (22 x 10^{12} Btu)]

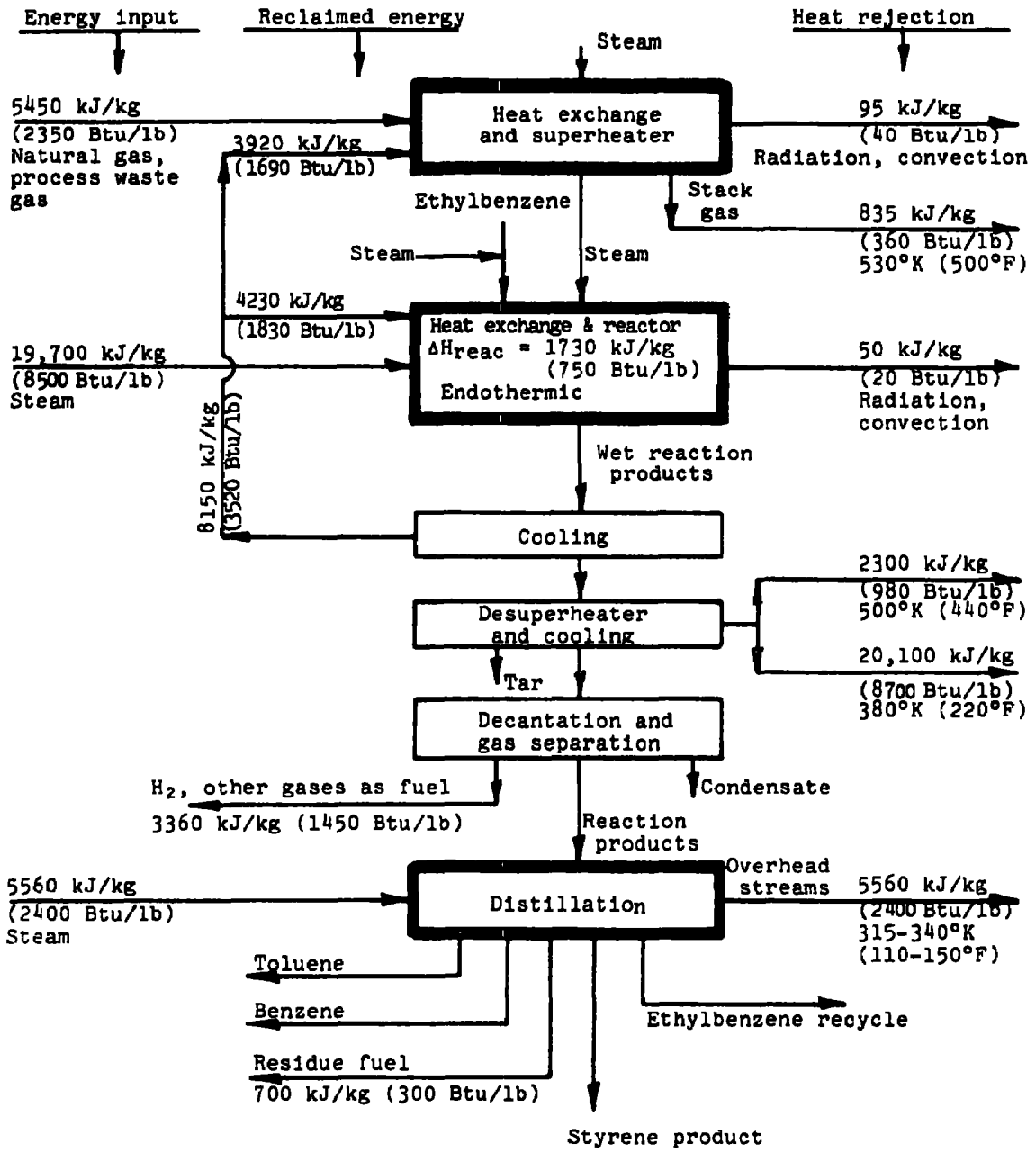

* 40% conversion of ethylbenzene to products
90% selectivity to styrene.

Figure 13. Styrene energy intensive equipment diagram - superheater, reactor, and cooling equipment
[Rejected heat: Radiation, convection - 145 kJ/kg (60 Btu/lb)
Stack gases - 835 kJ/kg (360 Btu/lb) at 530°K (500°F)
Hot reaction products - 2300 kJ/kg (980 Btu/lb) at 500°K (440°F) and 20,100 kJ/kg (8700 Btu/lb) at 380°K (220°F)]

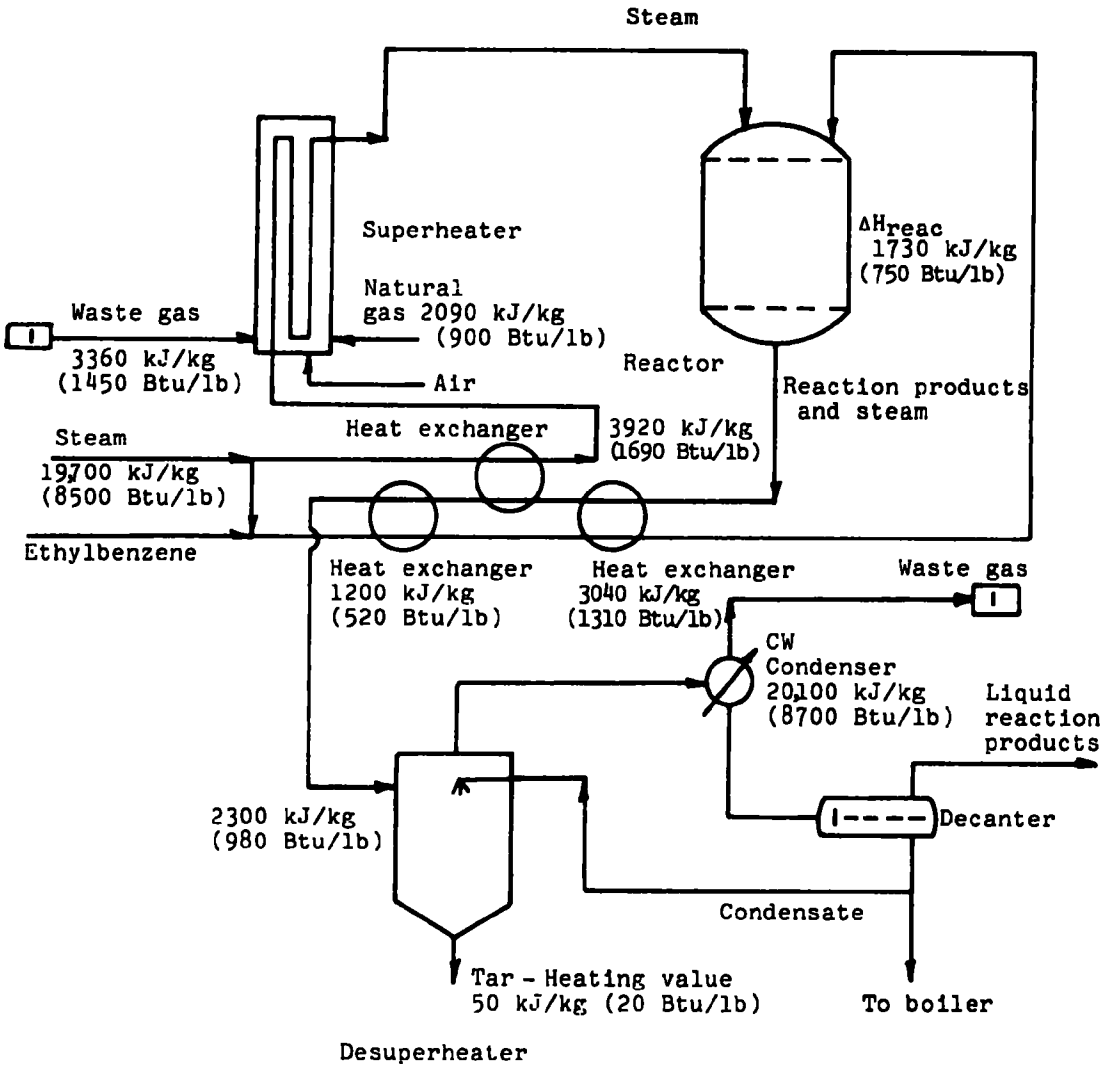

provided as a diluent to lower the ethylbenzene partial pressure and thereby allow the reaction conversion to increase.

Figure 14 shows the distillation operation. Steam provides energy for the primary columns - the light ends columns, the ethylbenzene column, and the styrene column.

Table 5 shows the causes of energy losses in the superheating-reaction operation, the distillation operation, and the overall process. It also shows the approximate magnitude of the losses and possible conservation approaches.

F. Phenol/Acetone by Oxidation of Cumene and Cleavage of Cumene Hydroperoxide

Figure 15 shows the major steps in the phenol/acetone manufacturing process. Cumene is oxidized to cumene hydroperoxide which is then split into phenol and acetone. Major energy consumption operations are air compression and separation of the reactor exit stream by distillation. These operations account for approximately 70 percent of the energy consumption in the manufacture of phenol/acetone.

Figure 16 shows the compression of air which is used to oxidize cumene. A two stage compression scheme with intercooling is employed.

Figure 17 shows the separation of unreacted cumene from cumene hydroperoxide by distillation. Steam is used to provide energy for this operation.

Figure 18 shows the separation of acetone from other reactor effluent components by distillation. Steam is the energy source for the three distillation columns - the crude acetone column, the light ends column, and the refined acetone column.

Figure 19 shows the separation of phenol from other reactor effluent components by distillation. Steam is the energy source for the four distillation columns - the heavy ends column, the cumene column, the dehydrogenation column, and the phenol column.

Figure 14. Styrene energy intensive equipment diagram - distillation [Rejected heat: From overhead streams - 5560 kJ/kg (2400 Btu/lb) at 315-340°K (110-150°F)]

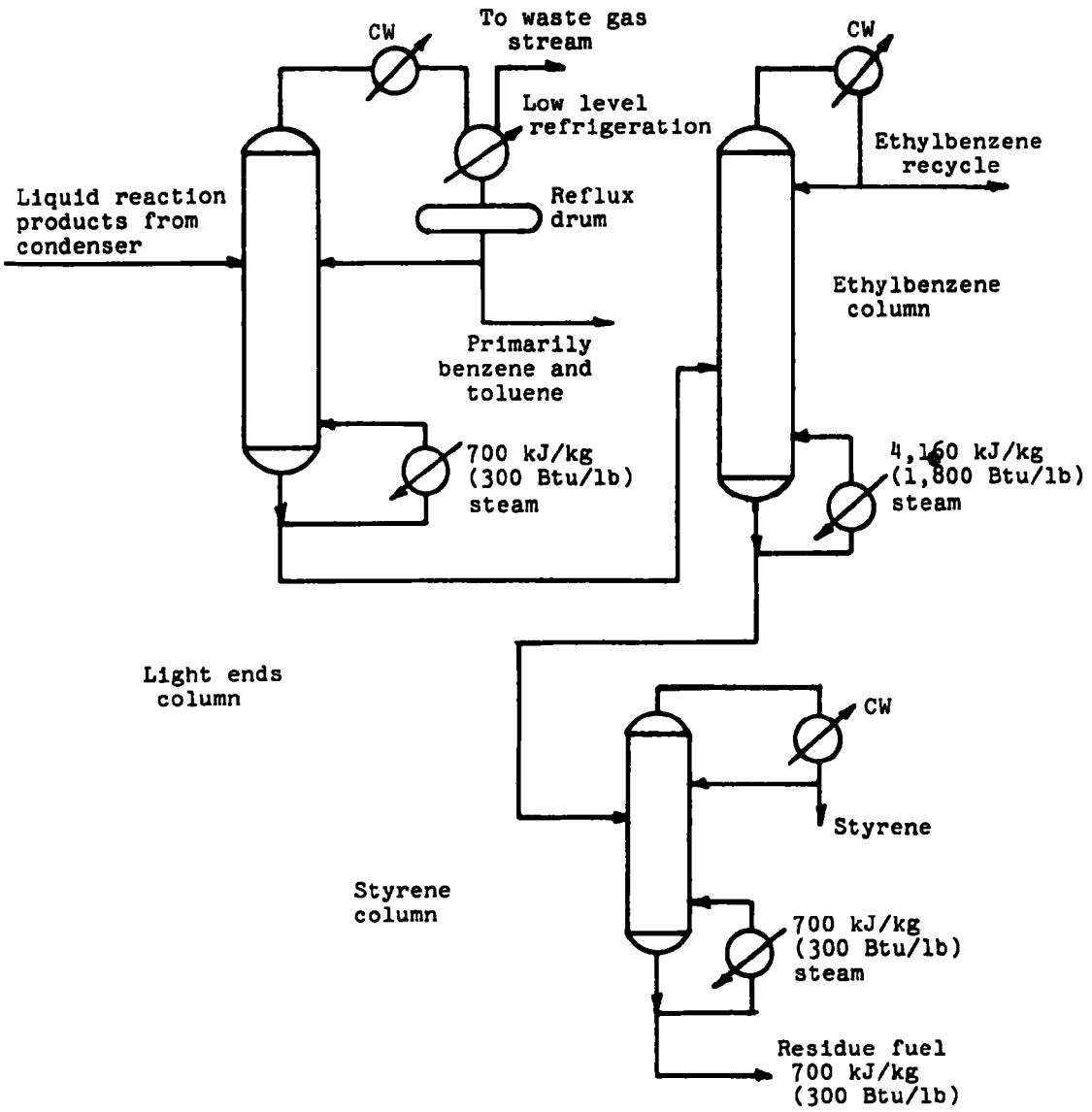

Table 5. STYRENE ENERGY CONSERVATION APPROACHES

Causes of energy losses	Approximate magnitude of losses	Energy conservation approaches
1. Superheater, reactor & cooling operations		
a. Heat in stack gases	835 kJ/kg (360 Btu/lb)	Design modification (waste heat recovery)
b. Radiation, convection	145 kJ/kg (60 Btu/lb)	Insulation Maintenance
c. Heat discarded from process stream	22,400 kJ/kg (9680 Btu/lb)	Design modification (waste heat recovery)
2. Rejected heat in distillation operation	5560 kJ/kg (2400 Btu/lb)	Design modification (waste heat recovery)
3. Overall process		
a. Low ethylbenzene conversion	18,500 kJ/kg (8000 Btu/lb)	Research & development
b. Fuel value of tar	50 kJ/kg (20 Btu/lb)	Waste utilization
c. High reflux ratios in distillation columns	930 kJ/kg (400 Btu/lb)	Design modification (more plates)

Figure 15. Phenol/acetone* energy consumption diagram
[1973 USA production: phenol 1.02 x 10^9 kg (2.25 x 10^9 lb)
acetone 0.905 x 10^9 kg (1.99 x 10^9 lb)
[1973 energy consumption (primarily steam): 530 MW
(16 x 10^{12} Btu)]
[1973 fuel generation (tar): 60 MW (1.8 x 10^{12} Btu)]

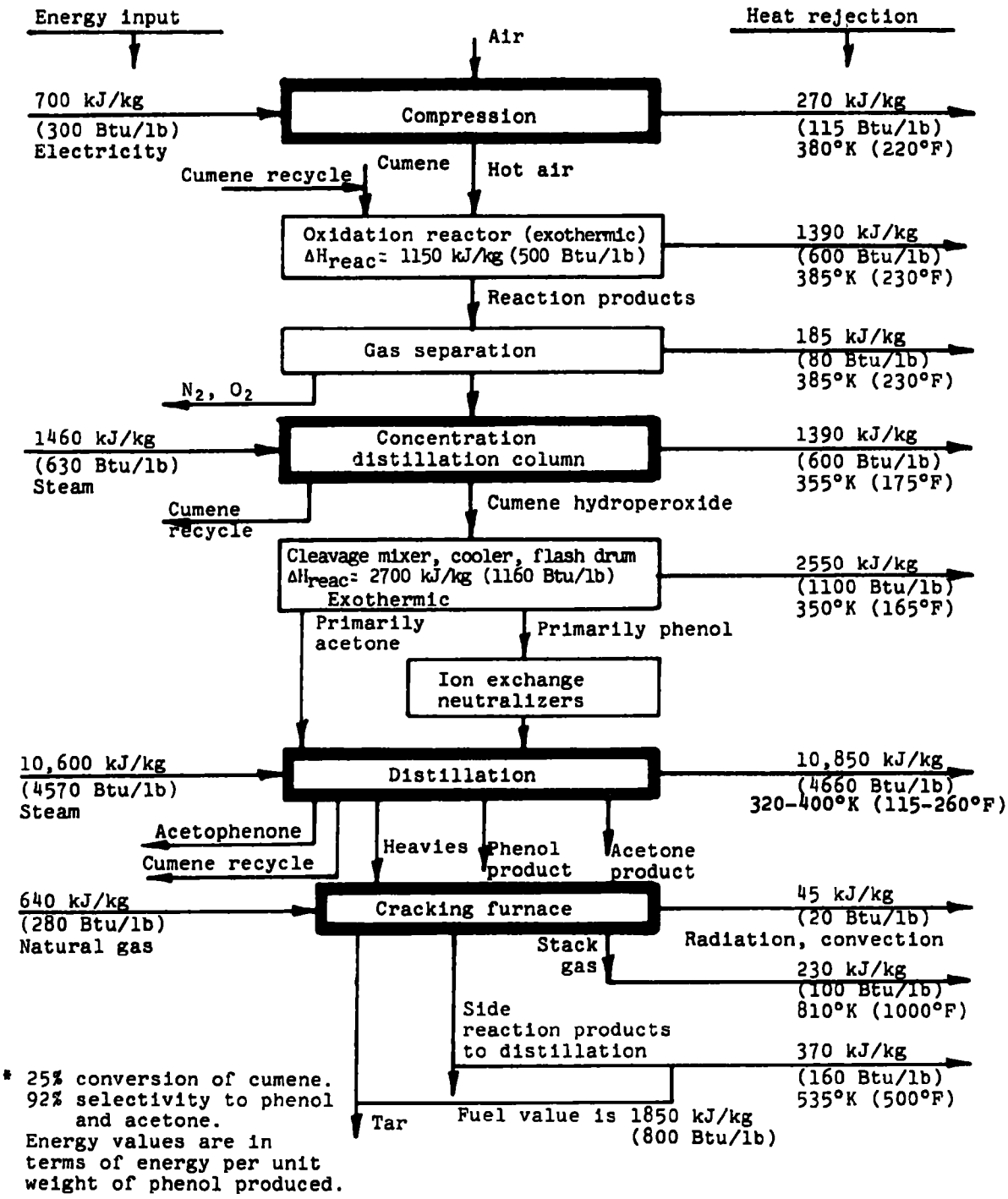

* 25% conversion of cumene.
92% selectivity to phenol and acetone.
Energy values are in terms of energy per unit weight of phenol produced.

Figure 16. Phenol/acetone energy intensive equipment diagram - air compression
[Rejected heat: Hot compressed air - 270 kJ/kg (115 Btu/lb) at 380°K (220°F)]

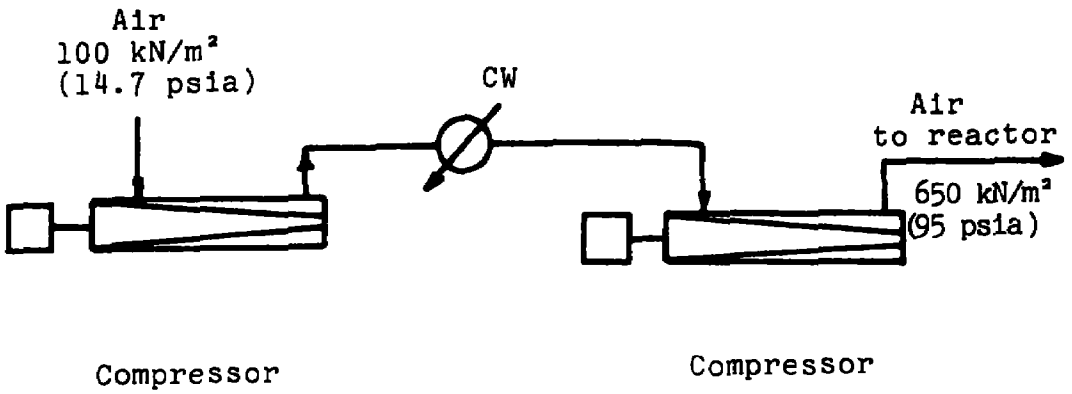

Note: Energy values are in terms of energy per unit weight of phenol produced.

Figure 17. Phenol/acetone energy intensive equipment diagram - cumene hydroperoxide concentration distillation column
[Rejected heat: Overhead stream - 1390 kJ/kg (600 Btu/lb) at 355°K (175°F)]

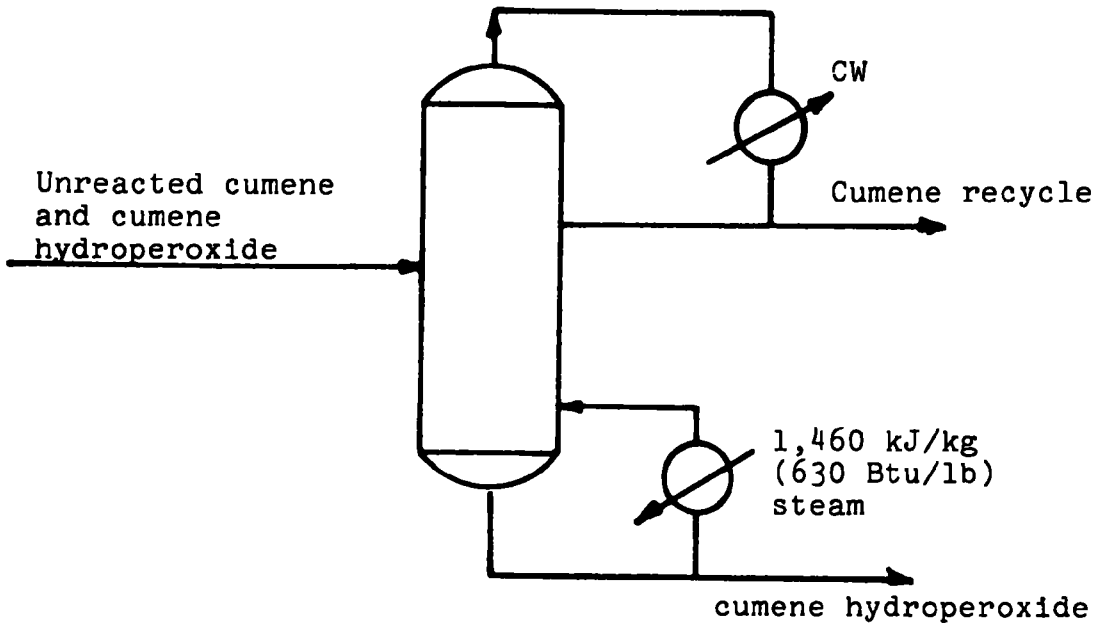

Cumene hydroperoxide concentration column

Note: Energy values are in terms of energy per unit weight of phenol produced.

Figure 18. Phenol/acetone energy intensive equipment diagram - acetone distillation columns
[Rejected heat: Overhead streams - 1350 kJ/kg (580 Btu/lb) at 320-335°K (115-140°F)]

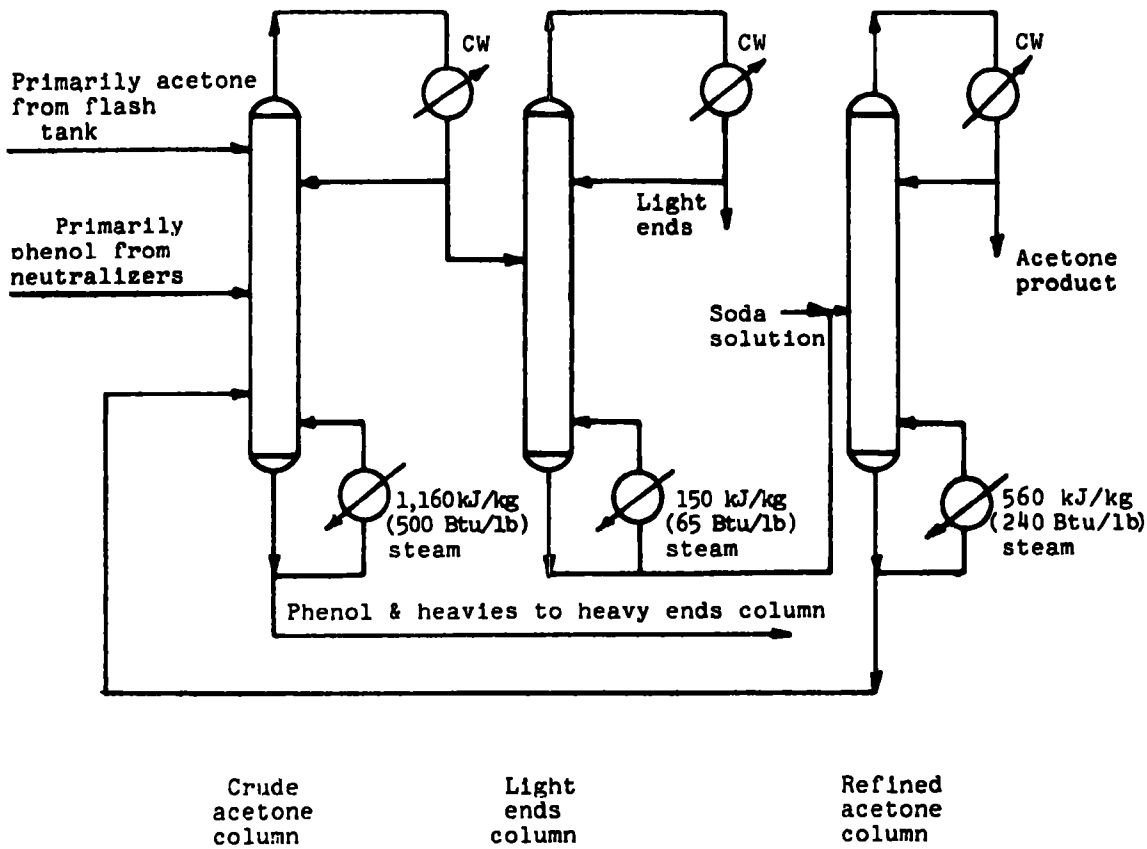

Note: Energy values are in terms of energy per unit weight of phenol produced.

Figure 19. Phenol/acetone energy intensive equipment diagram - phenol distillation column
[Rejected heat: Overhead streams - 9500 kJ/kg (4080 Btu/lb) at 320-400°K (115-260°F)]

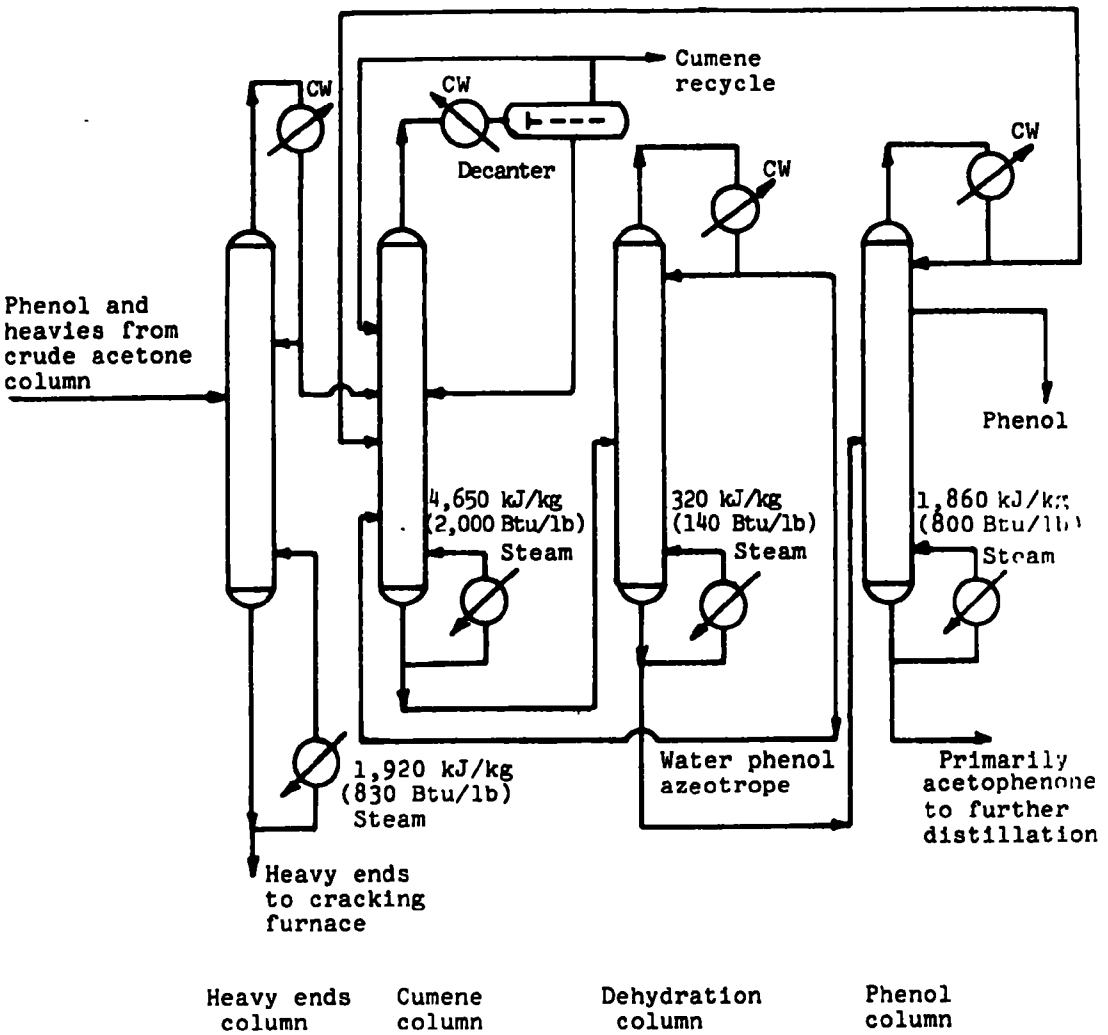

Note: Energy values are in terms of energy per unit weight of phenol produced.

Figure 20 shows the cracking of the bottoms from the heavy ends distillation column and from the acetophenone distillation column. Natural gas is used to provide heat for cracking of the bottoms material.

Table 6 shows the causes of energy losses in the compression operation, the distillation operation, the cracking operation, and the overall process. It also shows the approximate magnitude of the losses and possible conservation approaches.

G. Cumene by Alkylation of Benzene with Propylene

Figure 21 shows the major steps in the cumene manufacturing process. Phosphoric acid on alumina catalyzes the alkylation of benzene with propylene. The major energy consumption step is the separation of reactor effluent components by distillation. This operation accounts for approximately 90 percent of the total energy consumption in the process.

Figure 22 shows the distillation scheme used to separate the reactor exit stream components. Dowtherm is used to provide energy for the three distillation columns - the propane column, the benzene column, and the cumene column.

Table 7 shows the causes of energy losses in the distillation operation and the overall process. It also shows the approximate magnitude of the losses and possible energy conservation approaches.

H. Sodium Carbonate by the Solvay Process

Figure 23 shows the major steps in the synthetic sodium carbonate manufacturing process. The Solvay process is used. Major steps from an energy consumption viewpoint are the lime kiln operation, the compression of carbon dioxide, and the calcining of sodium bicarbonate to sodium carbonate. These steps account for more than 70 percent of the total energy consumption in the process.

Figure 24 shows the lime kiln operation. Coke supplies energy to convert calcium carbonate to calcium oxide and carbon dioxide.

Figure 25 shows the compression of carbon dioxide and nitrogen from the lime kiln. Steam is used to provide energy to drive the compressors.

Figure 20. Phenol/acetone energy intensive equipment diagram - cracking furnace
[Rejected heat: Radiation, convection - 45 kJ/kg (20 Btu/lb)
Hot stack gases - 230 kJ/kg (100 Btu/lb) at 810°K (1000°F)
Hot process streams - 370 kJ/kg (160 Btu/lb) at 535°K (500°F)]

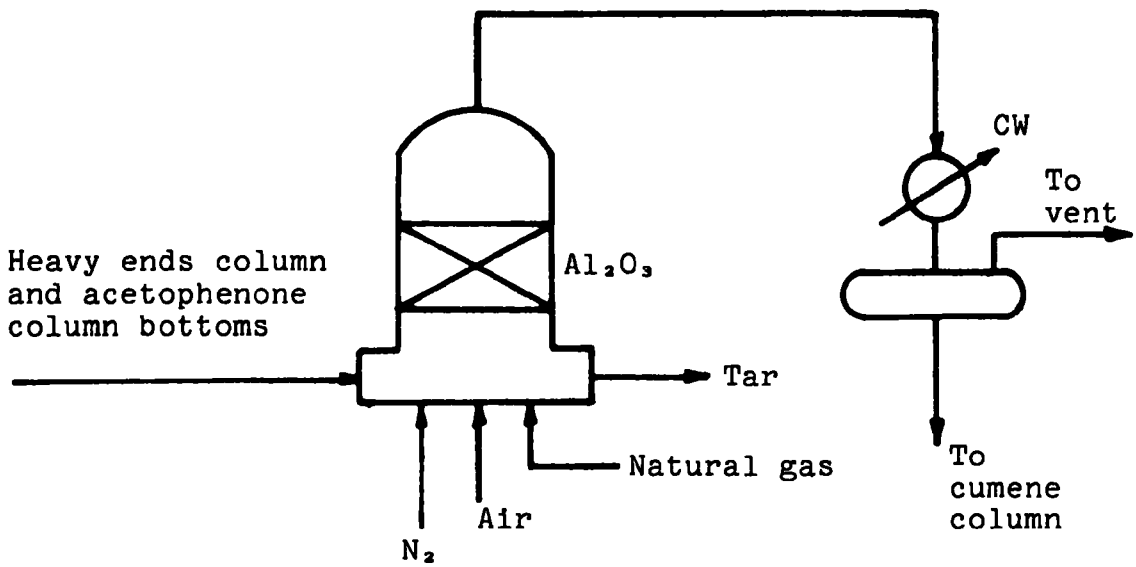

Cracking furnace plus dehydrator

Note: Energy values are in terms of energy per unit weight of phenol produced.

Table 6. PHENOL/ACETONE ENERGY CONSERVATION APPROACHES

Causes of energy losses	Approximate magnitude of losses	Energy conservation approaches
1. Rejected heat		
a. Hot compressed air	270 kJ/kg (115 Btu/lb)	Design modification (waste heat recovery)
b. Overhead streams from distillation columns	12,130 kJ/kg (5260 Btu/lb)	Design modification (waste heat recovery)
c. Other hot process streams	4500 kJ/kg (1940 Btu/lb)	Design modification (waste heat recovery)
d. Hot stack gases	230 kJ/kg (100 Btu/lb)	Design modification (waste heat recovery)
e. Radiation, convection	45 kJ/kg (20 Btu/lb)	Insulation Maintenance
2. Overall process		
a. Low cumene conversion to cumene hydroperoxide	1460 kJ/kg (630 Btu/lb)	Research & development
b. Fuel value of tar	1850 kJ/kg (800 Btu/lb)	Waste utilization
c. High reflux ratios in distillation columns	2040 kJ/kg (880 Btu/lb)	Design modification (more plates)
d. Non-isothermal compression of air	95 kJ/kg (40 Btu/lb)	- - - - - -
e. Non-isentropic compression of air	95 kJ/kg (40 Btu/lb)	Maintenance

Note: Energy values are in terms of energy per unit weight of phenol produced. Overall process losses d and e are electrical. The fuel value of these losses would be approximately three times the values listed.

Figure 21. Cumene* energy consumption diagram
[1973 USA production: 1.21 x 10^9 kg (2.67 x 10^9 lb)]
[1973 process energy consumption (primarily natural gas**): 270 MW (8.1 x 10^{12} Btu)]
[1973 total energy consumption (feedstock plus process): 1270 MW (38 x 10^{12} Btu)]

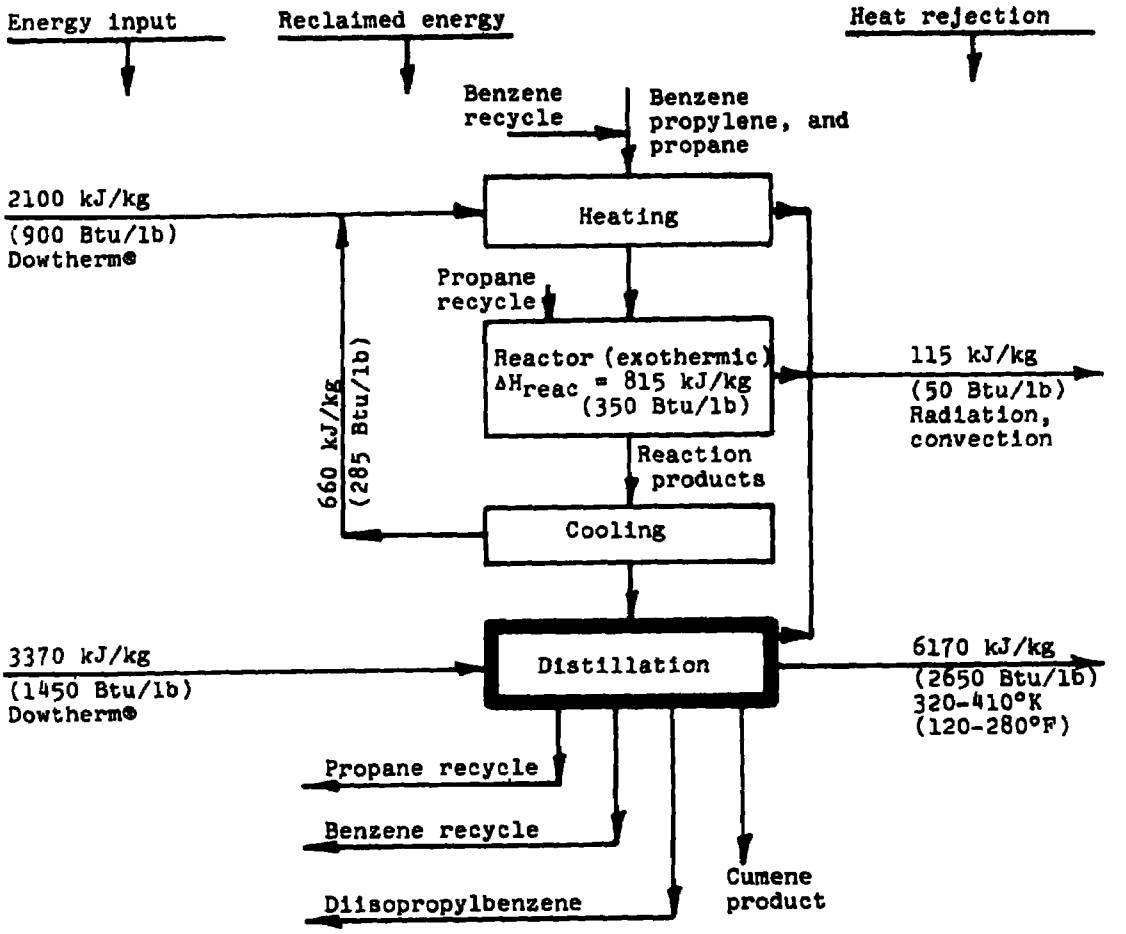

* 100% propylene conversion
92% selectivity to cumene
14% benzene conversion
97% selectivity to cumene
** Natural gas is used to heat Dowtherm®.

Figure 22 Cumene energy intensive equipment diagram - distillation [Rejected heat: Overhead distillation column streams - 5350 kJ/kg (2300 Btu/lb) at 320-410°K (120-280°F)]

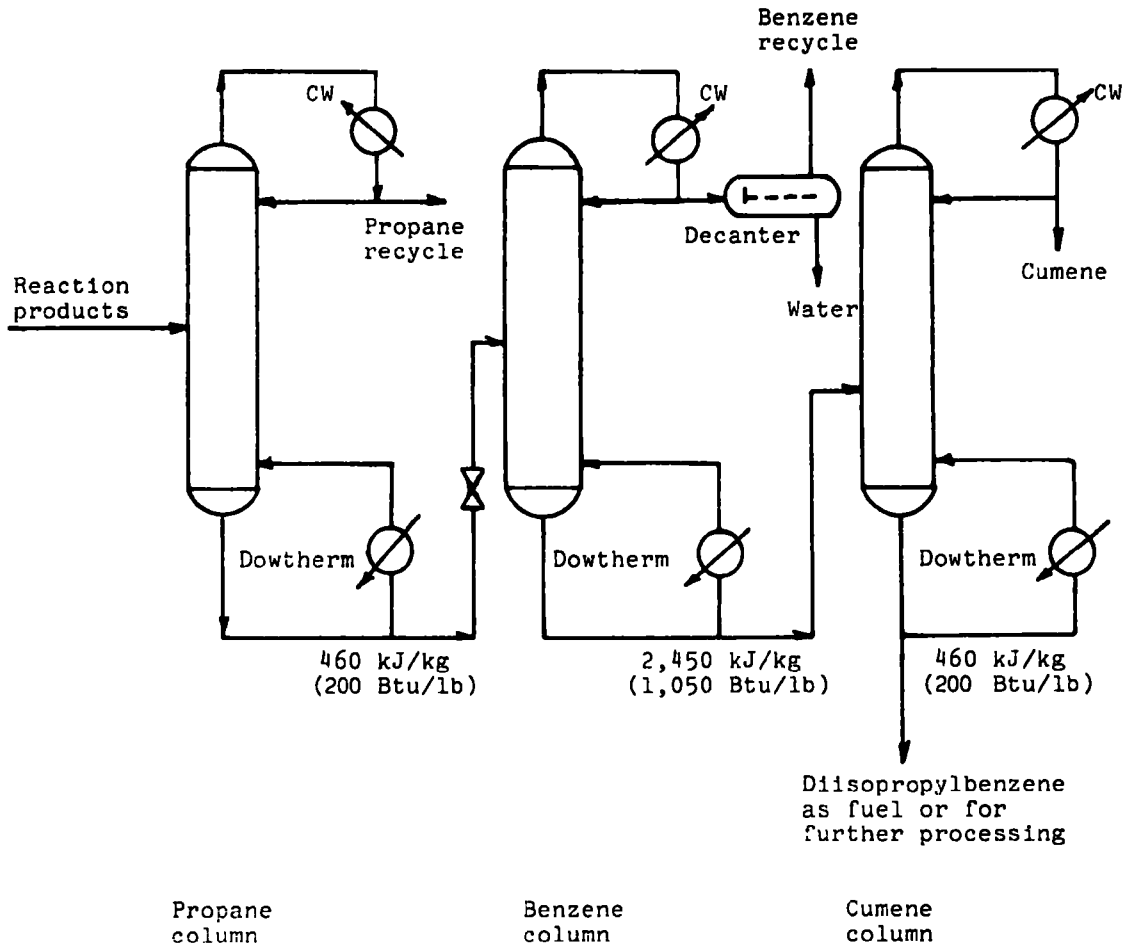

Table 7. CUMENE ENERGY CONSERVATION APPROACHES

Causes of energy losses	Approximate magnitude of losses	Energy conservation approaches
1. Rejected heat		
a. Radiation, convection	115 kJ/kg (50 Btu/lb)	Insulation Maintenance
b. Overhead streams from distillation columns	6170 kJ/kg (2650 Btu/lb)	Design modification (waste heat recovery)
2. Overall process		
a. Low benzene conversion	3500 kJ/kg (1500 Btu/lb)	Research & development
b. High reflux ratio in distillation columns	700 kJ/kg (300 Btu/lb)	Design modification (more plates)

Figure 23. Sodium carbonate energy consumption diagram
[1973 USA production: 6.80 x 10^9 kg (15.0 x 10^9 lb)]
[1973 energy consumption (primarily steam, coke): 2,000 MW (60 x 10^{12} Btu)]

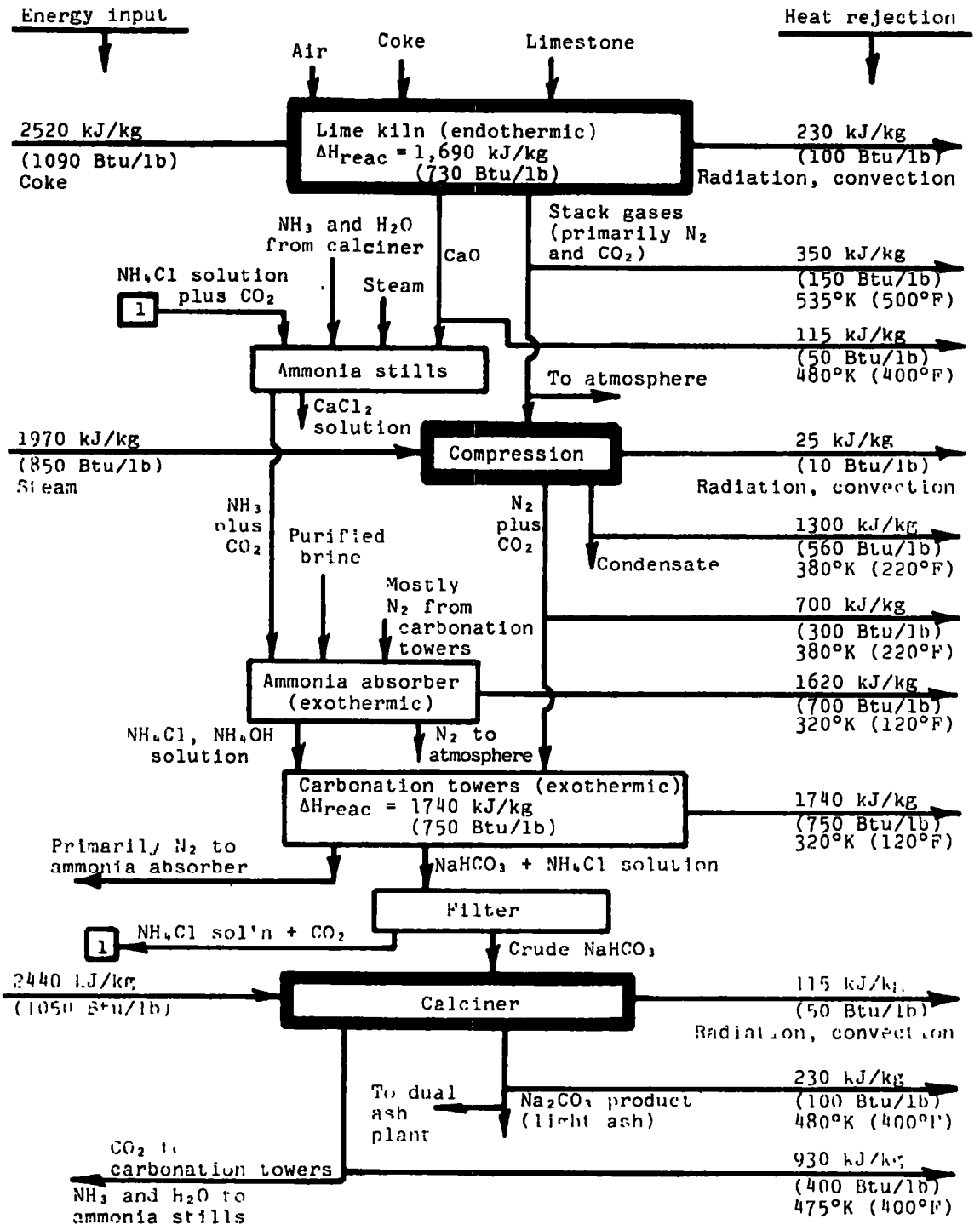

Figure 24. Sodium carbonate energy intensive equipment diagram - lime kiln
[Rejected heat: Radiation convection - 230 kJ/kg (100 Btu/lb)
Stack gases - 485 kJ/kg (210 Btu/lb) at 535°K (500°F)
Hot lime - 115 kJ/kg (50 Btu/lb) at 480°K (400°F)]

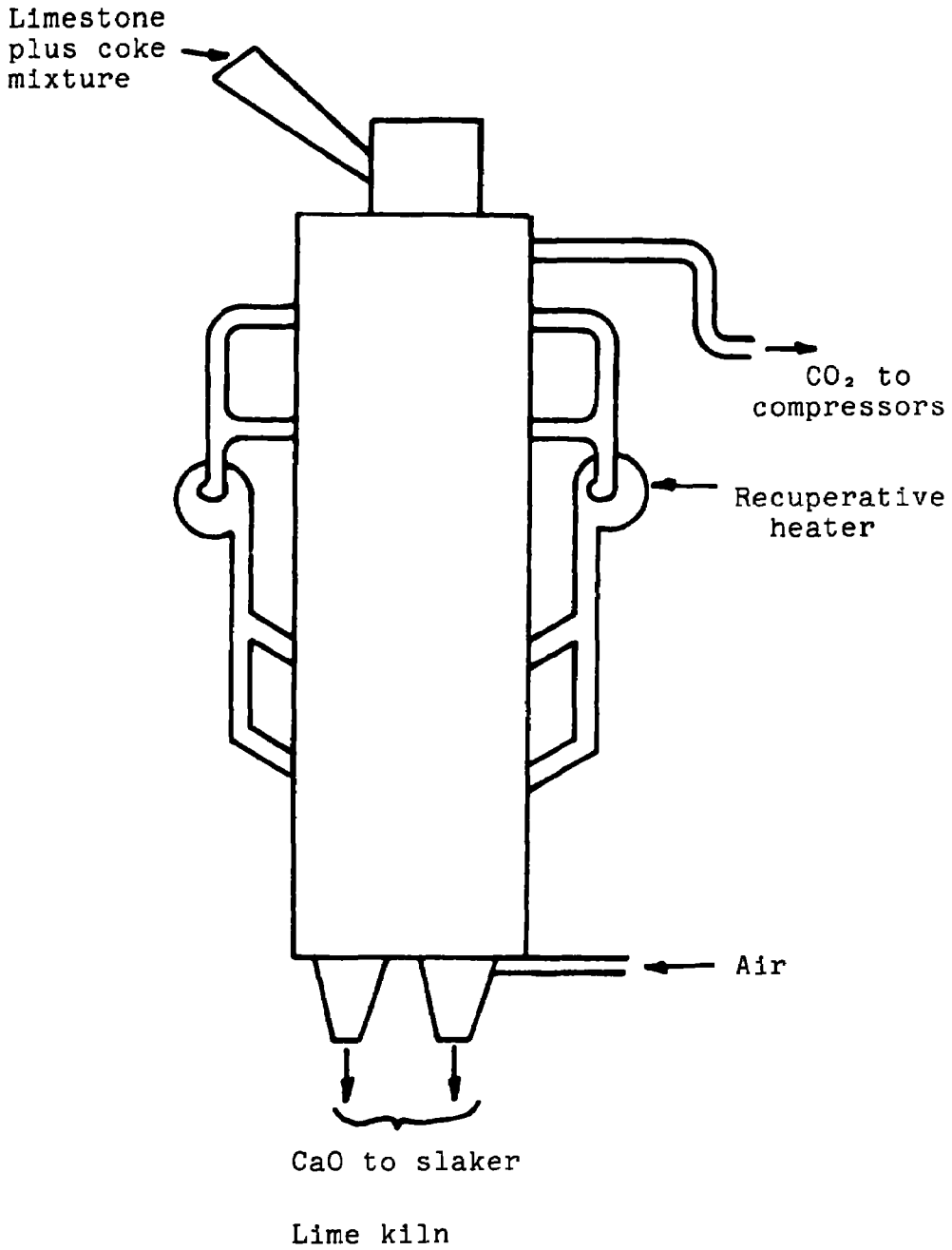

Figure 25. Sodium carbonate energy intensive equipment diagram - compressors
[Rejected heat: Radiation, convection - 25 kJ/kg (10 Btu/lb)
Condensate (vapor) - 1300 kJ/kg (560 Btu/lb) at 380°K (220°F)
Hot compressed CO_2 and N_2 - 700 kJ/kg (300 Btu/lb) at 380°K (220°F)]

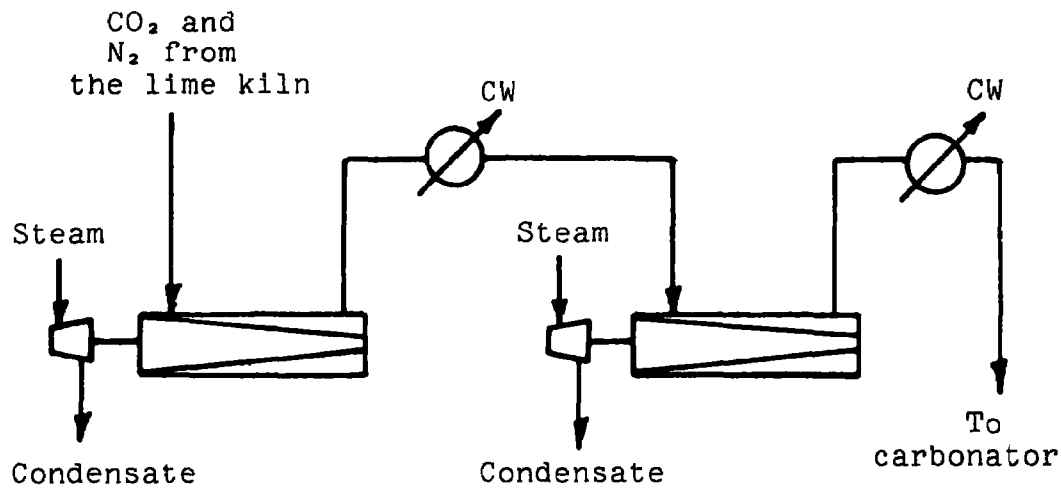

Figure 26 shows the calcining of sodium bicarbonate to sodium carbonate. Steam is the heat source.

Table 8 shows the causes of energy losses in the lime kiln operation, the compression operation, and the calcining operation. It also shows the approximate magnitude of losses and possible energy conservation approaches.

I. Carbon Black by the Furnace Process

Figure 27 shows the major steps in the carbon black manufacturing process. The furnace process uses a heavy aromatic oil as feedstock. A variety of blacks with different properties can be obtained by altering conditions in the reactor. The major energy consumption steps are the reaction operation and the drying of the carbon black. These operations account for over 80 percent of the total energy consumption in the process.

Figure 28 shows the reactor plus heat recovery equipment. Natural gas is the source of energy to heat the aromatic oil to the reaction temperature.

Figure 29 shows the drying operation. Reactor effluent gases are used to heat the wet carbon black and remove moisture from it.

Table 9 shows the causes of energy losses in the reaction operation, the drying operation, and the overall process. It also shows the approximate magnitude of the losses and possible energy conservation approaches.

J. Oxygen/Nitrogen by Air Distillation

Figure 30 shows the major steps in the oxygen/nitrogen manufacturing process. The compression of air accounts for almost 100 percent of the energy consumption in this process. However, the amount of compression required is dependent on the heat exchange between feed and product streams, and on the design of the distillation column.

Figure 31 shows the compression of air before it is cooled by product streams. Electricity is used to drive the compressor.

Figure 32 shows the distillation column used in the oxygen/nitrogen process to separate the components in

Figure 26. Sodium carbonate energy intensive equipment diagram - calciner
[Rejected heat: Radiation, convection - 115 kJ/kg (50 Btu/lb)
Hot product - 230 kJ/kg (100 Btu/lb) at (480°K) 400°F)]

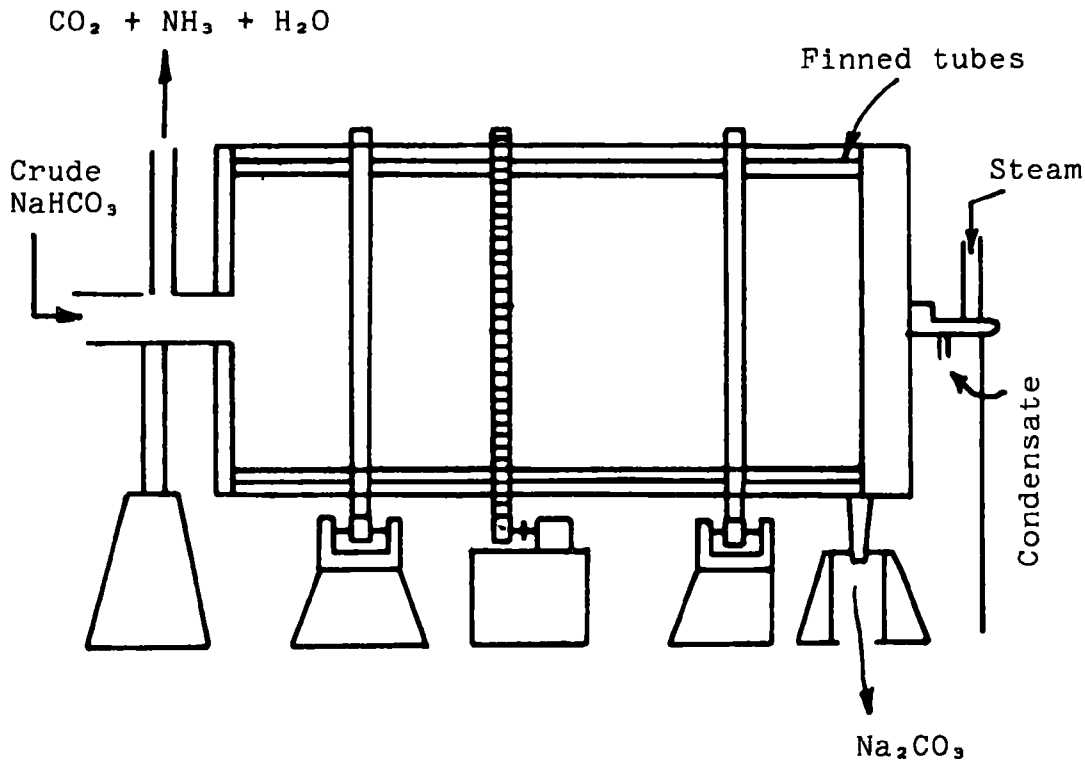

Rotary dryer

Table 8. SODIUM CARBONATE ENERGY CONSERVATION APPROACHES

Causes of energy losses	Approximate magnitude of losses	Energy conservation approaches
1. Rejected heat		
a. Radiation, convection	370 kJ/kg (160 Btu/lb)	Insulation Maintenance
b. Stack gases	350 kJ/kg (150 Btu/lb)	Design modification (waste heat recovery)
c. Uncondensed steam from compressor	1300 kJ/kg (560 Btu/lb)	Process integration
d. Process streams	5340 kJ/kg (2300 Btu/lb)	Design modification (waste heat recovery)
2. Overall process		
a. Non-isothermal compression	115 kJ/kg (50 Btu/lb)	- - - - - -
b. Non-isentropic compression	115 kJ/kg (50 Btu/lb)	- - - - - -
c. Gas for compression is only 40% CO_2	1150 kJ/kg (500 Btu/lb)	Process modification (use higher oxygen content combustion air)
d. Heat required to dry limestone and coke	115 kJ/kg (50 Btu/lb)	Design modification (enclosed storage)
e. Heat lost in heating impurities in limestone	230 kJ/kg (100 Btu/lb)	
f. High water content in calciner feed	345 kJ/kg (150 Btu/lb)	Design modification

Figure 27. Carbon black energy consumption diagram
[1973 USA production: 1.58 x 10^9kg (3.50 x 10^9 lb)]
[1973 process energy consumption (primarily natural gas): 800 MW (24 x 10^{12}Btu)]
[1973 total energy consumption (feed stock oil minus generated reactor gas plus process): 2500 MW (75 x 10^{12} Btu)]

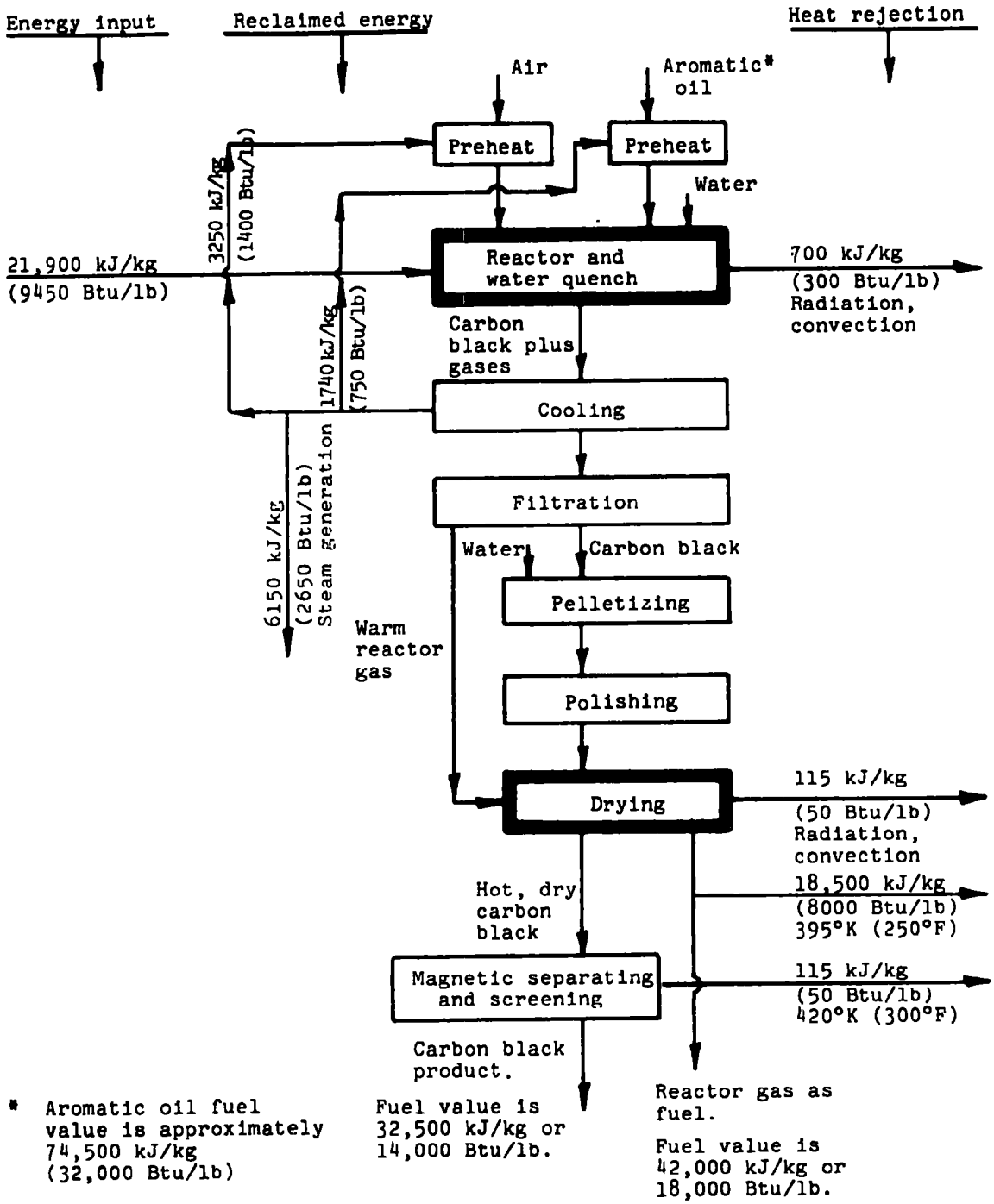

* Aromatic oil fuel value is approximately 74,500 kJ/kg (32,000 Btu/lb)

Figure 28. Carbon black energy-intensive equipment diagram - reactor and waste heat recovery equipment.

[Rejected heat: Radiation, convection - 700 kJ/kg (300 Btu/lb)]

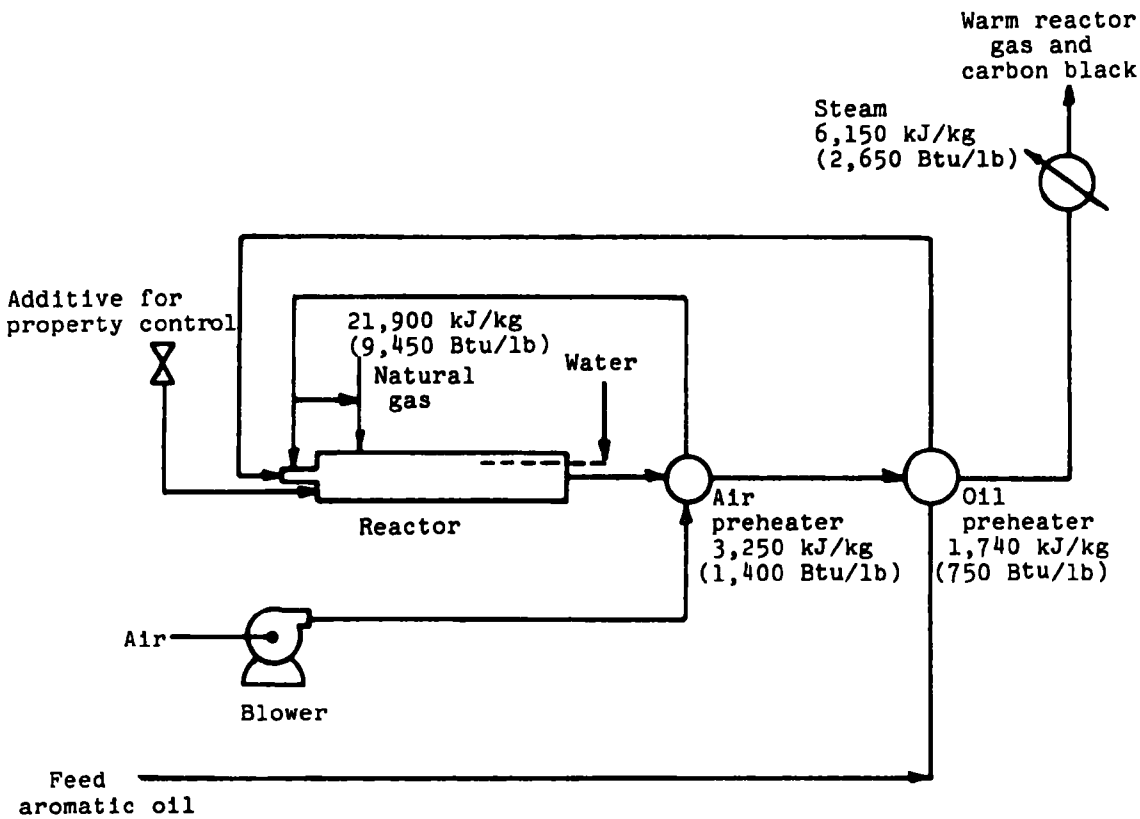

Figure 29. Carbon black energy-intensive equipment diagram - dryer.

[Rejected heat: Radiation, convection - 115 kJ/kg (50 Btu/lb)
Hot effluent gases - 18,500 kJ/kg (8000 Btu/lb) at 395°K (250°F)
Hot carbon black - 115 kJ/kg (50 Btu/lb) at 420°K (300°F)]

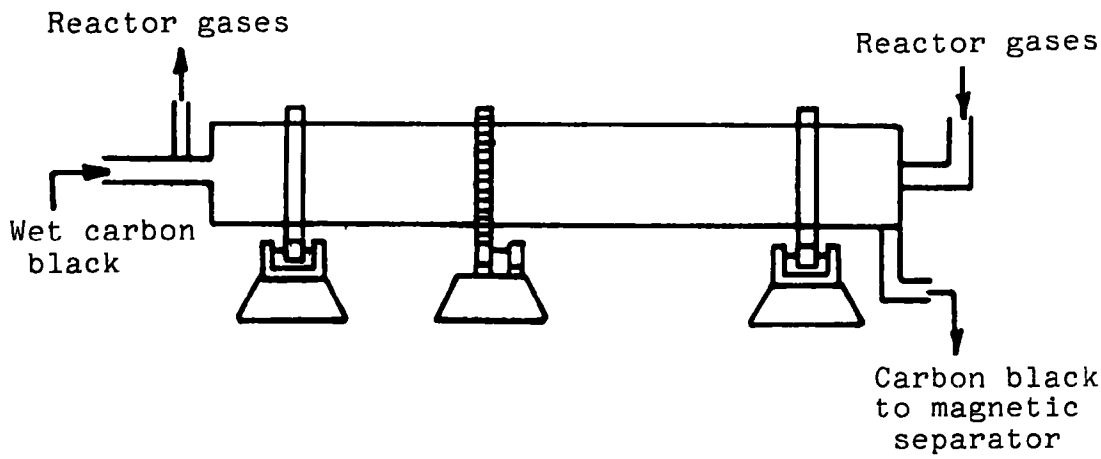

Rotary dryer

Table 9. CARBON BLACK ENERGY CONSERVATION APPROACHES

Causes of energy losses	Approximate magnitude of losses	Energy conservation approaches
1. Rejected heat		
a. Radiation and convection losses	810 kJ/kg (350 Btu/lb)	Insulation
b. Sensible heat in generated reactor gases leaving the process	2300 kJ/kg (1000 Btu/lb)	Design modification (waste heat recovery when using reactor gas as fuel)
c. Latent heat in generated reactor gases leaving the process	16,200 kJ/kg (7000 Btu/lb)	Design modification (waste heat recovery when using reactor gas as fuel)
d. Sensible heat from carbon black product	115 kJ/kg (50 Btu/lb)	- - - - -
2. Overall process		
a. Energy to heat inerts which are lost in quench water	7000 kJ/kg (3000 Btu/lb)	Process modification (use higher oxygen content gas to burn natural gas)
b. Fuel value of reactor gas	42,000 kJ/kg (18,000 Btu/lb)	Waste utilization

Figure 30. Oxygen/nitrogen energy consumption diagram*
[1973 USA production (oxygen): 14.5 x 10^9 kg (31.9 x 10^9 lb)]
[1973 energy consumption (electricity): 530 MW (16 x 10^{12} Btu)]

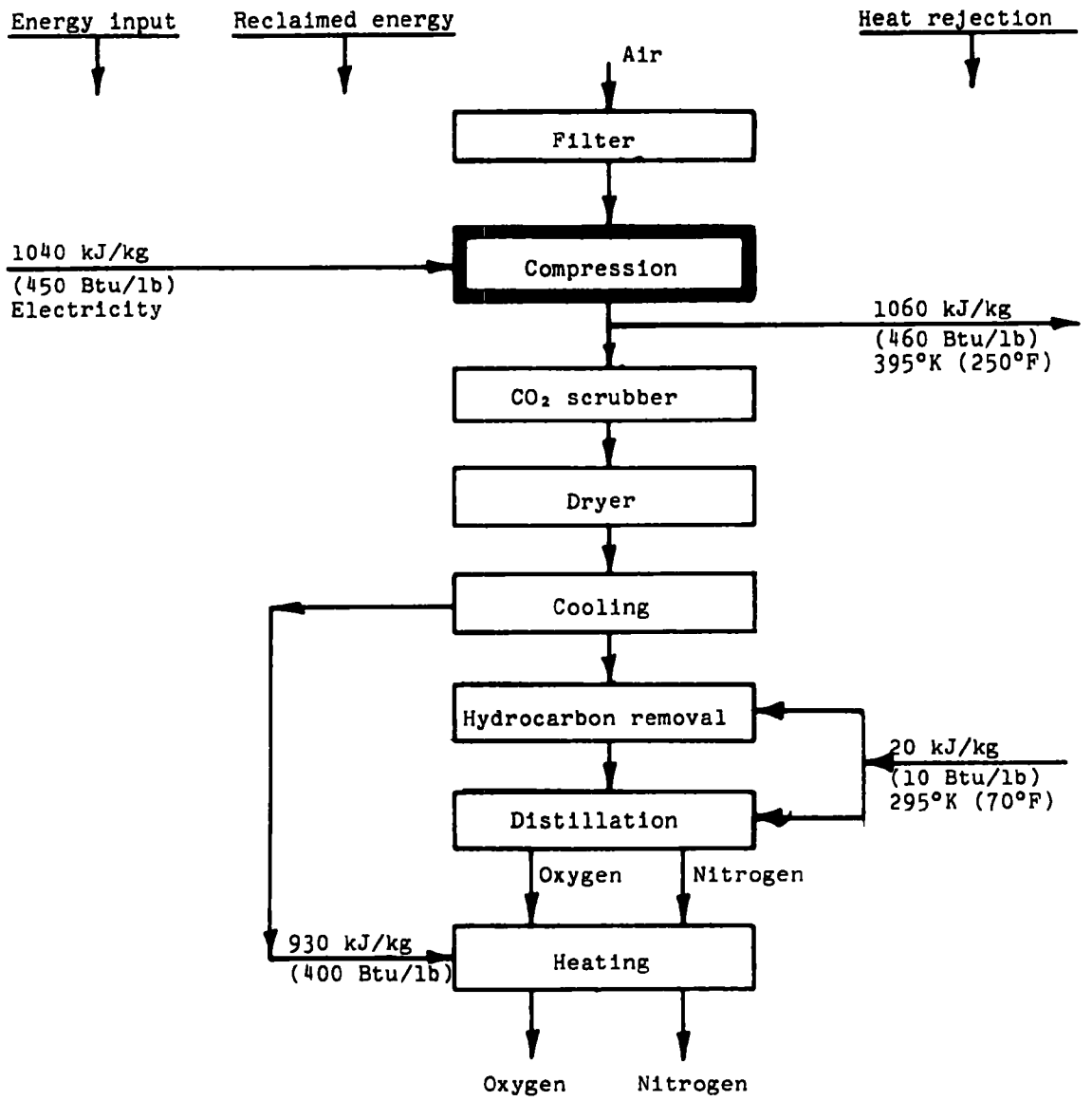

* Energy is expressed in terms of energy per unit weight of oxygen produced.

Figure 31. Oxygen/nitrogen energy-intensive equipment diagram - compressors

[Rejected heat: Hot compressed air - 1150 kJ/kg (500 Btu/lb) at 395°K (250°F)]

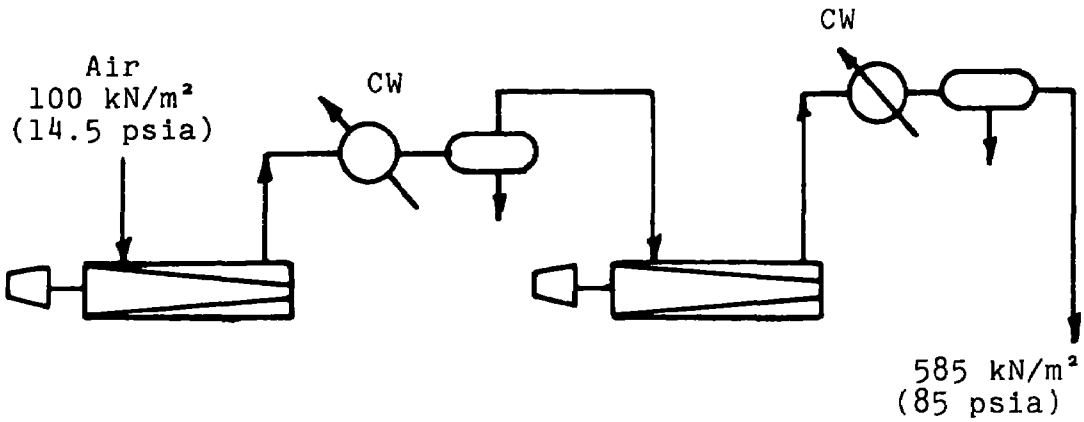

Note: Energy is expressed in terms of energy per unit weight of oxygen produced.

Figure 32. Oxygen/nitrogen energy-intensive equipment diagram - distillation column.

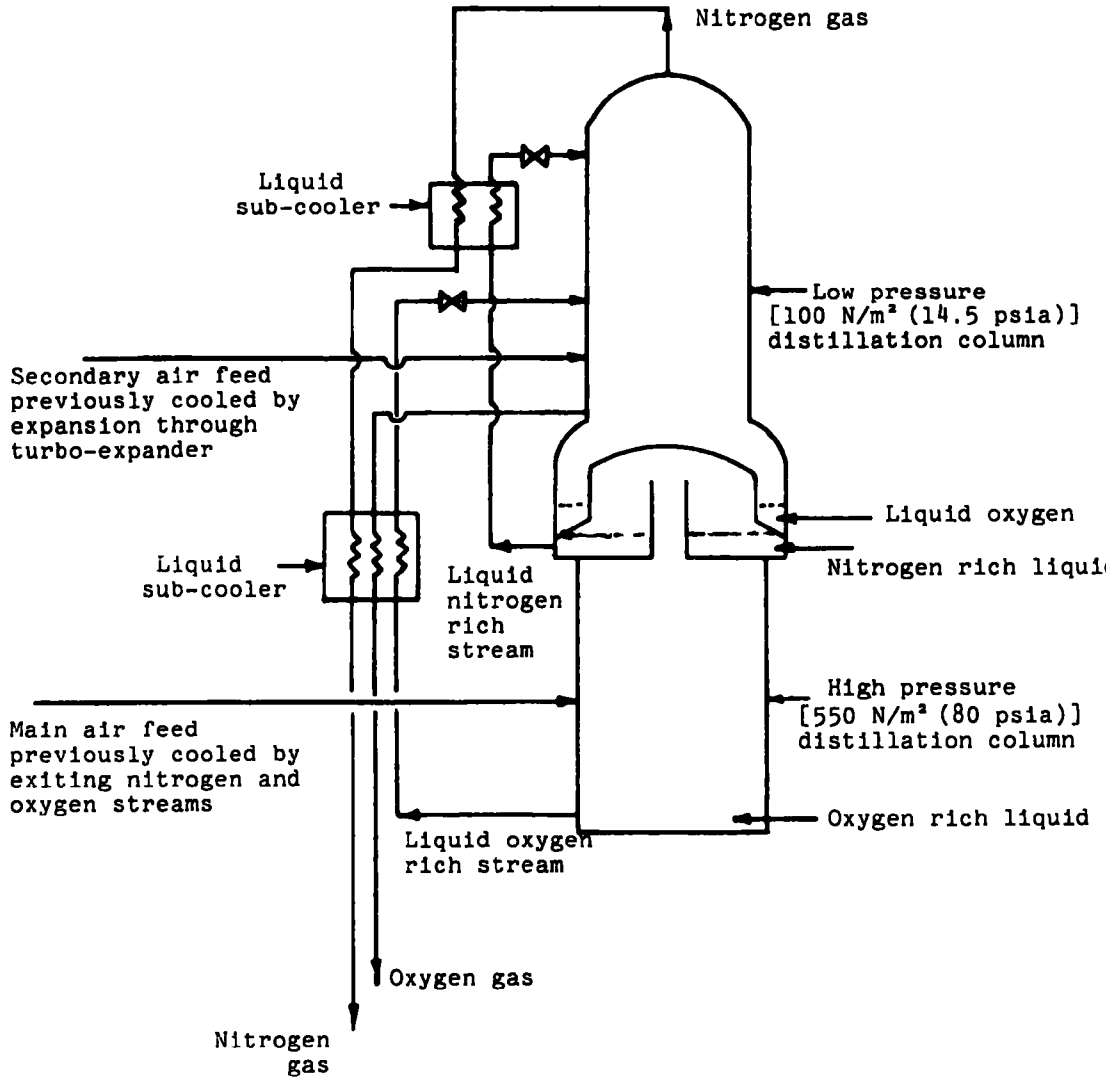

Note: Energy is expressed in terms of energy per unit weight of oxygen produced.

air. The design of this column along with the efficiency of heat exchange between feed and product streams plays a major role in determining the amount of air compression required.

Table 10 shows the causes of energy losses in the compression operation, the distillation operation, the heat exchange operation, and in the turbo-expander operation. It also shows the approximate magnitude of the losses and possible energy conservation approaches.

K. Operational and Design Problems of Energy Intensive Equipment

The analyses of the 10 chemical processes were made under the assumption that the plants were well designed and operated. In actual practice several operational and design problems commonly occur. Table 11 shows problems associated with three large energy consumers - furnaces, compressors, and distillation columns.

L. Operational and Design Problems of Heat Transfer Equipment

In addition to energy intensive operations a common energy wastage problem area is heat transfer equipment. Table 12 lists equipment where problems commonly occur along with some possible measures to overcome the problems.

M. Chemical Industry Energy Conservation Study Summary

Table 13 shows where the energy conservation approaches suggested in this report can be applied. All processes analyzed appear to have operations where energy losses could be decreased. However, a more detailed analysis of the processes and the approaches would be necessary to determine the economic feasibility of implementing the approaches.

Table 10. OXYGEN/NITROGEN ENERGY CONSERVATION APPROACHES

Causes of energy losses	Approximate magnitude of losses	Energy conservation approaches
1. Rejected heat in hot air from compressors	1060 kJ/kg (460 Btu/lb)	Design modification (waste heat recovery)
2. Overall process		
a. Non-ideal flow volume of liquid down column	45 kJ/kg (20 Btu/lb)	- - - - - - -
b. Temperature differences in reboiler-condenser and liquid sub-coolers	45 kJ/kg (20 Btu/lb)	- - - - - - -
c. Temperature differences between fluids in main heat exchange equipment	350 kJ/kg (150 Btu/lb)	- - - - - - -
d. Non-isothermal & non-isentropic compression losses	350 kJ/kg (150 Btu/lb)	Maintenance

Note: Energy is expressed in terms of energy per unit weight of oxygen produced. All overall process losses are electrical. The fuel value of these losses would be approximately three times as large as the values listed.

Table 11. OPERATIONAL AND DESIGN PROBLEMS IN ENERGY INTENSIVE EQUIPMENT

Common operational and design problems in high energy consumption equipment	Measures to overcome problems
1. Furnace combustion	
a. Improper air/fuel ratio	Provide instrumentation to measure oxygen content in flue gas (automatic controls)
b. Leaks in furnace stacks	Maintenance
2. Compression	
a. Leaky compressor bypass valves	Maintenance
b. Overdesign of motor or turbine	Do not over design
c. Improper suction pressure	Do not over design
d. Increasing clearance to lower output	Reduce compressor speed to lower output
e. Use of less expensive and less efficient turbines and compressors	Realize the value of high efficiency when selecting equipment
3. Distillation	
a. Erratic control of columns	Automatic control
b. Excessive reflux resulting in excessive component separation	Produce minimum quality material
c. Improper feed tray	Any change in process operation could result in a change in the optimum feed tray
d. Non-optimum distillation scheme	Consider energy saving possibilities such as multi-feeds, side product draw, or cascade distillation schemes

Table 12. OPERATIONAL PROBLEMS WITH HEAT TRANSFER EQUIPMENT

Common problems with heat transfer equipment	Measures to overcome heat transfer problems
1. Steam traps	
a. Faulty operation	Monitoring required
b. Leaking traps	Maintenance
c. Mis-design	Need proper application and sizing
2. Steam tracing	
a. Leaks	Maintenance
b. Unnecessarily high steam temperature	Substitute another fluid such as Dow SR-1® for steam
3. Heat exchangers	
a. Fouling	Maintenance
b. Higher than necessary temperature separation between fluid streams	Design for low temperature differences by increasing heat transfer surface area
c. Complete reliance on water cooling	Air cooling requires less power than water cooling

Table 13. CHEMICAL INDUSTRY ENERGY CONSERVATION STUDY SUMMARY

Process	Energy intensive operations	Energy conservation approaches								
		1 OM	2 R&D	3 DM	4 I	5 M	6 PI	7 PM	8 MM	9 WU
Chlorine	Electrolysis	✓	✓	✓						✓
Caustic soda	Evaporation			✓	✓					
	Overall process		✓						✓	
Ethylene	Furnace combustion			✓	✓	✓				
	Compression			✓		✓	✓			
	Refrigeration			✓			✓			
	Overall process		✓	✓						
Ethylbenzene	Distillation			✓						
	Overall process		✓	✓						✓
Styrene	Furnace combustion			✓	✓	✓				
	Distillation			✓						
	Overall process		✓	✓						✓
Phenol/acetone	Compression			✓		✓				
	Distillation			✓						
	Furnace combustion			✓	✓	✓				
	Overall process		✓	✓						✓
Cumene	Distillation			✓						
	Overall process		✓							
Sodium carbonate	Kiln calcining	✓		✓	✓					
	Compression			✓		✓	✓	✓		
	Calcining (drying)			✓	✓					
	Overall process							✓		
Carbon black	Furnace combustion			✓	✓					
	Drying			✓	✓					
	Overall process							✓		
Oxygen/nitrogen	Compression			✓		✓				
	Distillation									

OM - Operation modification
R&D - Research and development
DM - Design modification
I - Insulation
M - Maintenance
PI - Process integration
PM - Process modification
MM - Market modification
WU - Waste utilization

SECTION V

BIBLIOGRAPHY

Anderson, E. V. Growth Slows in Top 50 Chemicals' Output. Chemical and Engineering News. 52:10-13, May 6, 1974.

Deutsch, Z. G., C. C. Brumbaug, and F. H. Rockwell. Alkali and Chlorine Industry. In: Kirk-Othmer Encyclopedia of Chemical Technology. 2nd Ed., Standen, A. (ed.). New York, John Wiley & Sons, Inc., 1963 1:668-758.

Frank, S. M. Modern Ethylene Technology and Plant Design. In: Ethylene and Its Industrial Derivatives, Miller, S. A. (ed.). London, Ernest Benn Limited, 1969. p. 103-149.

Kienholz, P. J. Outlook for Chlorine-Caustic Production. Chemical Engineering Progress. 70:59-63, March 1974.

Latimer, R. E. Distillation of Air. Chemical Engineering Progress. 63:35-59, February 1967.

Ries, H. C. Carbon Black. Stanford Research Institute, Menlo Park, California. Process Economics Program, Report No. 90. May 1974. 349 p.

Stokes, C. A. Carbon Black. In: Kirk-Othmer Encyclopedia of Chemical Technology 2nd edition, Standen, A. (ed.). New York, John Wiley & Sons, Inc., 1971. Supplementary Volume: 91-108.

Takaoka, S. Ethylene. Stanford Research Institute, Menlo Park, California. Process Economics Program, Report No. 29. August 1967. 355 p.

Yen, Y. C. Chlorine, Supplement A. Stanford Research Institute, Menlo Park, California. Process Economics Program, Report No. 61A. May 1974. 256 p.

Yen, Y. C. Phenol, Supplement A. Stanford Research Institute, Menlo Park, California. Process Economics Program, Report No. 22A. September 1972. 232 p.

Yen, Y. C. Styrene. Stanford Research Institute, Menlo Park, California. Process Economics Program, Report No. 33. October 1967. 265 p.

Yen, Y. C. and T. H. Vanden Bosch. Styrene, Supplement A. Stanford Research Institute, Process Economics Program, Report No. 33A. March 1973. 223 p.

SECTION VI

GLOSSARY OF ABBREVIATIONS

Btu	British thermal unit
cond	condensate
CW	cooling water
kg	kilogram
kJ	kiloJoule
kN	kiloNewton
kw	kilowatt
lb	pound
m	meter
psia	pounds per square inch absolute
MW	megawatt
stm	steam
yr	year

SECTION VII

APPENDIX

ENERGY CONSERVATION APPROACHES

Design modification - This term includes design changes in equipment or process.

Insulation - This term implies that a review of the economics of additional insulation is needed.

Maintenance - This term implies that the economics of additional maintenance effort need review.

Process integration - This term relates to the best use of steam by using the same steam in more than one process such as to produce electricity and then heat.

Research and development - This term relates to the improvement of processes by future discoveries.

Operation modification - This term includes changes in operating procedures or practices that do not require a design change.

Market modification - This term relates to the substitution of a low energy consumption product for a high energy consumption product.

Process modification - This term relates to a change in a process due to a change in process feedstock, raw materials, or process route.

Waste utilization - This term relates to the use of fuel value of waste process streams or to the recycling of discarded materials.