EPA

United States Environmental Protection Agency

Office of Research and Development

Office of Energy, Minerals and Industry
Washington, D.C. 20460

EPA-600/7-77-037

April 1977

WATER REQUIREMENTS FOR STEAM-ELECTRIC POWER GENERATION AND SYNTHETIC FUEL PLANTS IN THE WESTERN UNITED STATES

Interagency
Energy-Environment
Research and Development
Program Report

RESEARCH REPORTING SERIES

Research reports of the Office of Research and Development, U.S. Environmental Protection Agency, have been grouped into nine series. These nine broad categories were established to facilitate further development and application of environmental technology. Elimination of traditional grouping was consciously planned to foster technology transfer and a maximum interface in related fields. The nine series are:

1. Environmental Health Effects Research
2. Environmental Protection Technology
3. Ecological Research
4. Environmental Monitoring
5. Socioeconomic Environmental Studies
6. Scientific and Technical Assessment Reports (STAR)
7. Interagency Energy-Environment Research and Development
8. "Special" Reports
9. Miscellaneous Reports

This report has been assigned to the INTERAGENCY ENERGY-ENVIRONMENT RESEARCH AND DEVELOPMENT series. Reports in this series result from the effort funded under the 17-agency Federal Energy/Environment Research and Development Program. These studies relate to EPA's mission to protect the public health and welfare from adverse effects of pollutants associated with energy systems. The goal of the Program is to assure the rapid development of domestic energy supplies in an environmentally-compatible manner by providing the necessary environmental data and control technology. Investigations include analyses of the transport of energy-related pollutants and their health and ecological effects; assessments of, and development of, control technologies for energy systems; and integrated assessments of a wide range of energy-related environmental issues.

This document is available to the public through the National Technical Information Service, Springfield, Virginia 22161.

EPA Report Number 600/7-77-037

February, 1977

WATER REQUIREMENTS FOR STEAM-ELECTRIC POWER GENERATION AND SYNTHETIC FUEL PLANTS IN THE WESTERN UNITED STATES

by

H. Gold, D.J. Goldstein, R. F. Probstein,
J. S. Shen and D. Yung
Water Purification Associates
Cambridge, Massachusetts

A Subcontract Report to the University of Oklahoma
Science and Public Policy Program for:

Technology Assessment of Western Energy Resource Development

EPA Contract Number 68-01-1916

Project Officer
Steven E. Plotkin
Office of Energy, Minerals and Industry
Washington, D.C. 20460

Office of Energy, Minerals and Industry
Office of Research and Development
U.S. Environmental Protection Agency
Washington, D.C. 20460

DISCLAIMER

This report has been reviewed by the Office of Energy, Minerals and Industry, U.S. Environmental Protection Agency, and approved for publication. Approval does not signify that the contents necessarily reflect the views and policies of the U.S. Environmental Protection Agency, nor does mention of trade names or commercial products constitute endorsement or recommendation for use.

FOREWORD

The authors of this report were given the assignment of determining the water requirements of several fossil fuel energy conversion technologies at six sites in the Western United States. It is known that the magnitude of such requirements is dependent upon plant design; thus, a critical assumption of the study is that the water use systems are designed by engineers operating simultaneously as cost-minimizing businessmen and water conservationists. These two roles are not mutually exclusive in the West, since water is hardly a free good. However, the price of water to the facilities in question is not so high that the water requirements presented in the report should be viewed as "minimum" requirements. Outright shortage of water, substantial increases in water cost, or restrictive legislation could force the water requirements of the conversion plants still lower.

The effect of water consumption by energy development on the environment, lifestyle and economy of the arid American West is a critical issue facing local, State and national policymakers. It is one of the key issues addressed by the Office of Energy, Minerals and Industry's "Technology Assessment of Western Energy Resource Development," a three year study addressing the impacts - and means of relieving those impacts - of energy development in the Western United States. The study is being conducted by the Science and Public Policy Program of the University of Oklahoma, under the management of Professor Irvin L. (Jack) White. This document is a subcontractor's report to the study, and will be formally appended to the study's Final Report. Because of our desire to disseminate important research results to the public as quickly as possible, we are publishing this report as a separate document.

Stephen J. Gage
Deputy Assistant Administrator
for Energy, Minerals, and Industry

ABSTRACT

The study describes the procedures for the detailed determination of the water consumed for mining and processing coal and oil shale, and for determining the residuals generated. The processes considered are Lurgi, Synthane, and Synthoil for coal conversion, TOSCO II for shale conversion, coal-fired steam electric power generation and slurry pipeline. In addition, determinations are also made of the water consumed for process cooling, flue gas desulfurization, revegetation of mined land, solids disposal and by evaporation and other uses within the mine-plant complex. In these determinations it is assumed that there is no discharge to receiving waters and that there is a reasonably high level of recycle and reuse of process effluent waters. Wasteful evaporation of waste-water is not permitted. Economic studies of water treatment are not included in this assessment except for some of the process cooling studies.

The consumptive water use and solids residuals are determined for a total of 21 plant-site combinations. The sites are: Beulah, North Dakota; Colstrip, Montana; Gillette, Wyoming; Kaiparowits/Escalante, Utah; Navajo/Farmington, New Mexico; and Rifle, Colorado. A detailed breakdown by consumptive water use category is presented in tabular form for each plant-site combination. Approximately twenty water use categories are considered. Results are also presented for three energy development scenarios focused on the Powder River and Rocky Mountain Regions.

CONTENTS

	Page
FOREWORD	iii
ABSTRACT	iv
FIGURES	viii
TABLES	x
CONVERSION TABLE	xv
ACKNOWLEDGEMENTS	xvii
1. INTRODUCTION AND SUMMARY	1
1.1 Introduction	1
1.2 Summary of Findings and Conclusions	4
2. COAL CONVERSION PROCESSES	17
2.1 Synthoil Process	17
2.2 Process Water Streams	33
2.3 Cooling Water	38
2.4 Lurgi Process	45
2.5 Synthane Process	48
References	54
3. SHALE CONVERSION	56
3.1 Underground Mining and Surface Processing	56
3.2 TOSCO II Process	57
3.3 Water Streams for Retorting	61
3.4 Water Streams for Upgrading	66
3.5 Process and Cooling Water Consumption	68
References	69
4. STEAM ELECTRIC GENERATION	70
4.1 Costs of Cooling Systems	70
4.2 Comparison of Dry and Evaporative Cooling Systems Not Including the Costs of Water	78
4.3 Costs of Water	89
4.4 Costs of Wet-Dry Cooling Systems	101
4.5 Water Consumed and Solid Residuals Generated	108
References	114

		Page
5.	SLURRY PIPELINE	115
	References	118
6.	FLUE GAS DESULFURIZATION	119
	6.1 Particulate and Sulfur Removal	119
	6.2 Water in Flue Gas	120
	6.3 Water in Waste Solids	124
	6.4 Comparison of Present Approach	127
	References	129
7.	MINING	130
	7.1 Categories	130
	7.2 Coal and Shale Mining Rates	130
	7.3 Road, Mine and Embankment Dust Control	134
	7.4 Handling and Crushing Dust Control	137
	7.5 Mine Personnel	138
	7.6 Sanitary and Potable Water	141
	7.7 Service and Fire Water	143
	7.8 Revegetation	143
	7.9 Coal Washing	145
	References	147
8.	EVAPORATION, SOLIDS DISPOSAL AND OTHER USES	149
	8.1 Categories	149
	8.2 Bottom Ash and Spent Shale Disposal	149
	8.3 Fly Ash and Shale Dust Disposal	153
	8.4 Plant Dust Control	154
	8.5 Plant Personnel	155
	8.6 Plant Sanitary and Potable Water	156
	8.7 Plant Service and Fire Water	156
	8.8 Settling Basin Evaporation	157
	8.9 Reservoir Evaporation	160
	References	161
9.	MUNICIPAL WATER REQUIREMENTS AND RESIDUALS	162
	Reference	163

		Page
10.	SITE-SPECIFIC RESULTS	164
11.	FINDINGS	187
	11.1 Total Site-Specific Water Consumption and Residuals	187
	11.2 Site-Specific Water Consumption and Residual Breakdowns	191
	11.3 Regional Water Consumption and Residuals	204
APPENDIX A.	COAL ANALYSES	206
APPENDIX B.	WATER ANALYSES AND PRECIPITATION AND EVAPORATION RATES	209
APPENDIX C.	LOAD FACTORS	215
APPENDIX D.	TOTAL WATER CONSUMED AND RESIDUALS GENERATED FOR THREE ENERGY SCENARIOS BY STATE AND COUNTY	217
APPENDIX E.	STATE TOTALS OF WATER CONSUMED AND RESIDUALS GENERATED FOR THREE ENERGY SCENARIOS	245

FIGURES

Number		Page
1-1	Breakdown of net annual water consumption and wet solid residuals generated in the production of 250 x 10^6 scf/stream day of synthetic natural gas by the Lurgi and Synthane processes at different Western sites	9
1-2	Breakdown of net annual water consumption and wet solid residuals generated in the production of 100,000 bbl/stream day of fuel oil by the Synthoil process at different Western sites and by the TOSCO II oil shale process at Rifle, Colorado	10
1-3	Breakdown of net annual water consumption and wet solid residuals generated in the production of 3,000 MWe/stream day of electricity by coal-fired steam-electric generating plants at different Western sites	11
1-4	Regional net annual water consumption and wet solid residuals generated in the Western coal and oil shale areas between the years 1980 and 2000 for three levels of energy development	15
2-1	Synthoil process	19
2-2	Hydrogen production train	25
3-1	TOSCO II retort flow diagram for upgrading shale oil output of 50,000 bbl per stream day with feed of 35 gallon per ton oil shale.	58
3-2	Flow diagram for TOSCO II shale oil upgrading refinery	60
3-3	TOSCO II process water streams for upgrading shale oil output of 50,000 bbl per stream day with feed of 35 gallon per ton oil shale	62
4-1	Cooling tower nomenclature	72
4-2	Annual evaluated cost of dry cooling system as a function of the initial temperature difference for Navajo/Farmington, New Mexico	81
4-3	Annual evaluated cost of evaporative cooling system as a function of cooling range for Navajo/Farmington, New Mexico	81
4-4	Wet/dry cooling system	104
4-5	Total annual evaluated costs of wet/dry cooling system as a percentage of evaporative loss of all evaporative cooling system at Navajo/Farmington, New Mexico	107

FIGURES (continued)

Number		Page
11-1	Breakdown of net annual water consumption and wet solid residuals generated in the production of 250 x 10^6 scf/stream day of synthetic natural gas by the Lurgi and Synthane processes at different Western sites	192
11-2	Breakdown of net annual water consumption and wet solid residuals generated in the production of 100,000 bbl/stream day of fuel oil by the Synthoil process at different Western sites and by the TOSCO II oil shale process at Rifle, Colorado	193
11-3	Breakdown of net annual water consumption and wet solid residuals generated in the production of 3,000 MWe/stream day of electricity by coal-fired steam-electric generating plants at different Western sites	194
11-4	Regional net annual water consumption and wet solid residuals generated in the Western coal and oil shale areas between the years 1980 and 2000 for three levels of energy development	205

TABLES

Number		Page
1-1	Unit size plants and ratio of operating or stream days to calendar days in a year (load factor)	2
1-2	Summary of net annual water consumption and wet solid residuals generated at each site	6
1-3	Net water consumed for Western coal sites per million Btu of heating value in product	7
2-1	Material balance on Synthoil plant exclusive of hydrogen production for Colstrip, Montana	20
2-2	Material balance on Synthoil plant exclusive of hydrogen production for Beulah, North Dakota	21
2-3	Material balance on Synthoil plant exclusive of hydrogen production for Gillette, Wyoming	22
2-4	Material balance on Synthoil plant exclusive of hydrogen production for Navajo/Farmington, New Mexico	23
2-5	Water equivalent hydrogen balance of Synthoil plant at four sites.	27
2-6	Approximate total heat load of Synthoil plant at four sites	29
2-7	Gas compressor energy and interstage cooling requirements for Synthoil and Synthane plants	31
2-8	Approximate thermal efficiencies of Synthoil plants	32
2-9	Ultimate disposition of unrecovered heat in Synthoil plants	34
2-10	Water lost in condensate water treatment	35
2-11	Demineralizer water treatment waste	37
2-12	Water evaporation rates for wet cooling	42
2-13	Cooling water treatment waste	44
2-14	Water equivalent hydrogen balance of Lurgi plant at four sites	47
2-15	Assumptions and calculations on thermal efficiency of Lurgi plants	49

TABLES (continued)

Number		Page
2-16	Water equivalent hydrogen balance for the Synthane process using Wyodak coal	50
2-17	Approximate thermal efficiency for Synthane plant at Wyoming	52
2-18	Approximate disposition of unrecovered heat in Synthane plant at Wyoming	53
3-1	Determination of TOSCO II retort water streams for upgrading shale oil output of 50,000 bbl per stream day with feed of 35 gallon per ton shale, on basis of water balance for combined retorting and upgrading steps	64
3-2	Compilation of TOSCO II refinery water streams for upgraded shale oil output of 50,000 bbl per stream day with feed of 35 gallon per ton shale, on basis of water balance for combined retorting and upgrading steps	67
4-1	Summary of unit price data	79
4-2	Summary of design conditions for optimized cooling systems at Navajo/Farmington, New Mexico	83
4-3	Summary of capital costs for optimized cooling systems (10^6 Dollars) at Navajo/Farmington, New Mexico	84
4-4	Summary of energy and power quantities for optimized cooling systems at Navajo/Farmington, New Mexico	85
4-5	Breakdown of annual evaluated costs for optimized cooling system at Navajo/Farmington, New Mexico (10^6 dollars/yr)	87
4-6	Comparison of total annual evaluated costs of optimized cooling systems and breakeven water costs	88
4-7	Control limits for cooling tower circulating water composition	91
4-8	Flow diagram, circulating water concentration and estimated costs for Navajo/Farmington, New Mexico cooling tower	96
4-9	Summary of annual evaluated costs of water treatment and blowdown disposal	97
4-10	Pipeline data	99
4-11	Evaluated costs of supplying water	100
4-12	Summary of evaluated water costs	102

TABLES (continued)

Number		Page
4-13	Total annual evaluated costs for optimum wet/dry cooling systems at Navajo/Farmington, New Mexico	106
4-14	Water evaporated and heat dissipation rates for cooling towers	109
4-15	Residuals generated at each site	110
4-16	Drift rates	112
4-17	Demineralizer residuals	113
6-1	Moles of water vapor per mole of dry gas at saturation	120
6-2	Determination of total moles of dry flue gas per unit weight of coal or char as fired	122
6-3	Element weights per unit weight of coal or char and makeup water requirements per unit weight of coal or char for coals and char of present study	123
6-4	Weight of $CaSO_4 \cdot 2H_2O$ and $CaSO_3 \cdot \frac{1}{2}H_2O$, and water of hydration per unit weight of sulfur	124
6-5	Weight of slurry water per unit weight of sulfur for a 40 wt.% solids concentration	125
6-6a	Weight of components of lime sludge (dry) and corresponding weights of sulfur and water of hydration	125
6-6b	Weight of components of limestone sludge (dry) and corresponding weights of sulfur and water of hydration	126
6-7	Weight of solids and water of hydration per unit weight of sulfur in lime and limestone sludges	126
6-8	Weight of sulfur and makeup water requirements per unit weight of coal for coals of present study and with 40 wt.% solids in slurry	128
6-9	Comparison of flue gas desulfurization makeup water requirements for Kaiparowits coal from design estimates of Ref. 2 and present approximate formulation	128
7-1	Process heat requirements for 250 x 10^6 scf/stream day Lurgi plant	131
7-2	Mine and process requirements for coal conversion plants	132
7-3a	Coal tonnage requirements for unit size plants in tons per calendar day	133

TABLES (continued)

Number		Page
7-3b	Coal and shale tonnage requirements for unit size plants in tons per calendar day	133
7-4	Coal yields per acre	134
7-5	Annual pond evaporation rates	135
7-6	Area strip mined annually in acres per year	136
7-7a	Number of mine personnel for specific mines integrated with coal conversion plants and a slurry pipeline	140
7-7b	Number of mine personnel for an underground and surface mine integrated with a steam-electric plant and for an underground oil shale mine integrated with a shale oil plant	140
7-8	Sanitary and potable water usage per man-shift and percent of usage consumed	141
8-1	Temperature of bottom ash on removal and ash temperature drop on quenching	150
8-2	Ash quantities in tons per day	152
8-3	Plant personnel at all sites	156
8-4	Evaporation rates without and with evaporation control and need for settling basin	159
9-1	Municipal water requirements in gallons per capita per day	163
10-1	Summary of total water consumed and residuals generated at each site	165
11-1	Summary of net annual water consumption and wet solid residuals generated at each site	188
11-2	Net water consumed for Western coal sites per million Btu of heating value in product	190
11-3	Weight of water as a percent of total weight of wet solid residuals	201
A-1	Coal analyses	208
B-1	Source of feed water	212
B-2	Source water quality	213
B-3	Precipitation and evaporation data (inches/year)	214

TABLES (continued)

Number		Page
C-1	Load factors	216
D-1	Base quantities assumed for water consumed and residuals generated for standard size plants in each state of western region	219
D-2	Location of results for specific scenarios by region, energy demand, and year	220
E-1	Location of results for specific scenario by region and facility	246

CONVERSION TABLE

LENGTH

English to Metric

1 mile = 1.609 kilometers = 1609 meters
1 yard = .9144 meter = 9144 centemeters

PRESSURE

English to Metric

1 pound per square inch (psi) = .06804 atmosphere = 703.1 kilograms per square meter

AREA

English Equivalent

1 square mile = 640 acres

English to Metric

1 square mile = 2.590 square kilometers = 259.0 hectares = 2,590,000 square meters
1 acre = .004047 square kilometer = .4047 hectares = 4047 square meters

FLOW RATE

English to Metric

1 cubic foot per second = 4488 gallons per minute = 723.8 acre per year = .02832 cubic meters per second
1,000,000 acre feet per year = 3.9126 3.9126 cubic meters per second

WEIGHT

English Equivalent

1 ounce (avoirdupois) = 437.5 grains (troy)

English to Metric

1 short ton (2,000 pounds) = .9066 metric tons = 906.6 kilograms
1 pound - .4536 kilogram
1 ounce - 2.8349 grams

VOLUME AND CAPACITY

English Equalivant

1 acre-foot = 43,560 cubic feet = 325,900 gallons
1 cubic yard = 202 gallons (liquid)
1 cubic foot = 7.481 gallons (liquid)

English to Metric

1 cubic yard = .7646 cubic meters = 764.6 liters
1 cubic foot = .02832 cubic meters = 28.32 liters

CONVERSIONS OF UNITS

VOLUMETRIC FLOW RATES		gpm	mgd	cfs	acre ft/yr
1 gallon per minute	=	1	1.44×10^{-3}	2.23×10^{-3}	1.614
1 million gallons per day	=	694	1	1.55	1,120
1 cubic foot per second	=	448	0.645	1	723
1 acre foot per year	=	0.619	8.91×10^{-4}	1.38×10^{-3}	1

MASS FLOW RATES		ton/day	ton/yr	lb/hr	gpm of H_2O
1 ton per day	=	1	365	83.3	0.167
1 ton per year	=	2.74×10^{-3}	1	0.228	4.56×10^{-4}
1 pound per hour	=	0.012	4.38	1	2.00×10^{-3}
1 gallon water per minute*	=	6.00	2.19×10^{3}	500	1

*1 gallon of water = 8.33 pounds

ACKNOWLEDGEMENTS

The authors wish to express their most sincere thanks to Steve Plotkin of the Office of Energy, Minerals and Industry, U.S. Environmental Protection Agency and Professor Irvin L. (Jack) White of the University of Oklahoma, Science and Public Policy Program for their many suggestions during the course of the work and for their untiring efforts to ensure the success of the program.

1. INTRODUCTION AND SUMMARY

1.1 Introduction

Two important aspects of any assessment of the potentials for utilizing the abundant coal and oil shale resources in the Western United States are first the local and regional environmental problems associated with the large consumptive use of water required for mining and processing these resources, and second the problem of disposal of the large quantities of solid residuals that leave the mine-plant complex. In some western locales, where coal and oil shale can be economically mined, surface and groundwater is in short supply. Moreover, in the West there is frequently keen competition between agricultural, power producing, municipal, industrial, recreational and other users for allocations of the available water supply. The problems cited could hamper efforts to utilize the nation's western coal and oil shale resources.

As a first step in estimating the impact of water supply and availability on the development of these fossil fuel resources, it is necessary to make an accurate determination of the water consumed for mining and processing, together with a determination of the residuals generated. In this study, the consumptive water requirements and solid residuals are determined for the unit size plant-mine complexes and load factors indicated in Table 1-1.

The coal input rates are about the same for the Lurgi and Synthane gasification plants, although more coal is mined for the Lurgi plant because the fines cannot be used and must be sold off. Compared with the unit size gasification plant the coal input to a 3,000 MWe generating plant is about 30% more, to the unit size Synthoil plant about 2 times

as much, and to the slurry pipeline about 3 times as much. The input to the shale oil plants is not directly comparable, but we would note that the raw shale tonnage for a 100,000 bbl/day surface retort shale oil plant is 3 times the coal tonnage for a 100,000 bbl/day Synthoil plant.

Table 1-1. Unit size plants and ratio of operating or stream days to calendar days in a year (load factor).

	Nominal Output	Load Factor (stream day/calendar day)
Slurry Pipeline	25×10^6 tons coal/year	1.0
Lurgi	250×10^6 scf/stream day	0.9
Synthane	250×10^6 scf/stream day	0.9
Synthoil	100,000 bbl/stream day	0.9
Electrical Generation	3,000 MWe @ 35% eff.	0.7
Electrical Generation	1,000 MWe @ 35% eff.	0.7
Oil Shale, TOSCO II	50,000 bbl/stream day	0.9
Oil Shale, TOSCO II	100,000 bbl/stream day	0.9

For each process, detailed calculations are carried out on the quantities of water consumed for the following purposes:

(1) the energy conversion process itself,

(2) evaporation for process cooling,

(3) flue gas desulfurization, if required,

(4) the mining operation and any revegetation of mined land,

(5) solids disposal, evaporation and other uses within the mine-plan complex.

In our determinations we assume zero discharge to receiving waters. We also assume water treatment facilities based on available technology

to provide for a reasonably high level of recycle and reuse of process effluent waters. Wasteful evaporation of wastewater is not permitted. The water treatment procedures that can be used are given. Economic studies of water treatment are not included in this assessment except for some of the process cooling studies. For example, the choice of wet, wet/dry, or dry cooling for steam electric generating plants is made on economic considerations. The choice of cooling in the process plants is also made on the basis of economic considerations from other ongoing studies, although the detailed cost breakdowns are not incorporated in this report.

The water consumption and solid residuals generated for the unit size mine-plant complexes noted are determined at a number of different locations. The locations considered are:

Beulah, North Dakota

Colstrip, Montana

Gillette, Wyoming

Kaiparowits/Escalante, Utah

Navajo/Farmington, New Mexico

Rifle, Colorado

Not every plant is sited at each location. In particular, the slurry pipeline is sited only at Gillette, while shale oil production is sited only at Rifle. At Kaiparowits only electric power generation is considered, with the coal source an underground mine, as distinct from the other sites, where all coal is taken to be surface mined. A total of 21 plant-site combinations is examined.

Regional consumptive water requirements and solid residuals generated are determined, based on the site-specific results and on an assumed distribution of plants and different levels of energy development from the present to the year 2000. The aggregated or regional scenarios focus on the Powder River Region, which includes the states of Montana, North Dakota and Wyoming, and the Rocky Mountain Region which includes the states of Colorado, New Mexico and Utah. Three levels of Western energy development are considered for the years 1980, 1985, 1990 and 2000 based on the Stanford Research Institute energy model.

1.2 Summary of Findings and Conclusions

A preliminary assessment has been made of the minimum water consumption and the solid residuals generated in synthetic fuel plants and coal-fired steam-electric generating plants sited in the West. Approximate regional estimates and projections have been made based on three different levels of energy demand. The results show some estimated plant water consumptions as much as a factor of three below the lowest published design estimates. It is indicated that with more detailed study of optimized water treatment and use large reductions in water consumption and residual discharge are possible. Under these conditions there will be larger variations in water consumption with site, and these should be studied. The results also point up that detailed regional environmental impacts cannot be properly assessed without further determinations of local and regional water supply and demand data and residual disposal methods.

The study findings and conclusions are presented below on the basis of total site-specific water consumption and residuals, a breakdown of these quantities, and regional water consumption and residuals.

Total Site-Specific Water Consumption and Residuals

Table 1-2 summarizes the study findings on the net annual water consumption and wet solid residuals generated at each site for the unit size mine-plant complexes assumed to be located there. Table 1-3 summarizes the net water requirements in terms of gallons per million Btu of fuel produced (gal/10^6 Btu) with no distinction made as to consumption between the sites but with overall ranges given instead.

Some of the major but necessarily tentative conclusions of this study are the following:

1. Lurgi gasification facilities have the largest variation in net water consumption as a function of site, ranging from 3.3-5.6 x 10^3 acre-ft/yr, principally as a consequence of differences in coal moisture at the different locations.

2. The variations in water consumption with site for the Synthane and Synthoil facilities are found to be relatively small being no more, respectively, than 13% and 16%. However, for the steam electric power generating plants a maximum difference in water consumption of 25% is noted. These same findings do not hold for the residuals.

3. Synthane facilities use from 1.5-2.3 times the water that a Lurgi facility does at the same site partly because the Lurgi process accepts wet coal and utilizes the moisture, although at a cost. This same moisture could in principle be recovered in Synthane plants in coal drying, and this should be studied.

Table 1-2. Summary of net annual water consumption and wet solid residuals generated at each site.

FACILITY	BEULAH, NORTH DAKOTA	COLSTRIP, MONTANA	GILLETTE, WYOMING	KAIPAROWITS/ ESCALANTE, UTAH	NAVAJO/ FARMINGTON, NEW MEXICO	RIFLE, COLORADO
SLURRY PIPELINE (25 x 10^6 tons/yr @ 100% load factor)						
NET WATER CONSUMED ~ 10^3 ACRE-FT/YR*			19.17			
WET SOLID RESIDUALS ~ 10^6 TONS/YR			-			
LURGI (250 x 10^6 scf/stream day @ 90% load factor)						
NET WATER CONSUMED ~ 10^3 ACRE-FT/YR	3.31	4.62	4.21		5.64	
WET SOLID RESIDUALS ~ 10^6 TONS/YR	1.20	1.27	0.72		3.00	
SYNTHANE (250 x 10^6 scf/stream day @ 90% load factor)						
NET WATER CONSUMED ~ 10^3 ACRE-FT/YR	7.67	7.81	7.78		8.67	
WET SOLID RESIDUALS ~ 10^6 TONS/YR	1.08	1.12	0.71		2.84	
SYNTHOIL (100,000 bbl/stream day @ 90% load factor)						
NET WATER CONSUMED ~ 10^3 ACRE-FT/YR	10.09	10.30	9.23		11.75	
WET SOLID RESIDUALS ~ 10^6 TONS/YR	2.00	2.07	1.23		5.31	
ELECTRICAL GENERATION (3,000 MWe @ 35% eff, 70% load factor)						
NET WATER CONSUMED ~ 10^3 ACRE-FT/YR	23.88	26.66	25.84	29.82	29,21	
WET SOLID RESIDUALS ~ 10^6 TONS/YR	2.65	3.01	1.32	5.30	5.00	
ELECTRICAL GENERATION (1,000 MWe @ 35% eff, 70% load factor)						
NET WATER CONSUMED ~ 10^3 ACRE-FT/YR						9.49
WET SOLID RESIDUALS ~ 10^6 TONS/YR						0.38
OIL SHALE (50,000 bbl/stream day @ 90% load factor)						
NET WATER CONSUMED ~ 10^3 ACRE-FT/YR						6.48
WET SOLID RESIDUALS ~ 10^6 TONS/YR						20.40
OIL SHALE (100,000 bbl/stream day @ 90% load factor)						
NET WATER CONSUMED ~ 10^3 ACRE-FT/YR						12.92
WET SOLID RESIDUALS ~ 10^6 TONS/YR						40.81

*To convert 10^3 acre-ft/yr to 10^6 tons/yr multiply by 1.36,
to convert 10^3 acre-ft/yr to 10^6 gal/day multiply by 0.894.

Table 1-3. Net water consumed for Western coal sites per million Btu of heating value in product.

Facility	Net Water Consumed ($gal/10^6$ Btu)
Lurgi	14-24
Synthane	32-36
Synthoil	15-19
Oil Shale	23
Slurry Pipeline	14
Electric Generation	43-54*

*$gal/10^6$ Btu of heating value of input coal.

4. The net water consumption of Synthoil and TOSCO II oil shale facilities producing the same output of 100,000 bbl/day are roughly the same at between 9.2 and 12.9 x 10^3 acre-ft/yr, with the oil shale consumption at the upper end of the range.

5. With the design procedures used in this study and with proper water treatment design the Lurgi, Synthoil, oil shale and slurry pipeline water requirements are roughly the same with a mean around 18 $gal/10^6$ Btu when expressed per unit of heating output. The slurry pipeline requirement is at the lower end of the spread, while oil shale is at the upper end. The Synthane facilities require about 2 times more water. The water for electric power generation is by far the largest requiring 2.5 times more water, as measured in terms of the heating value of the input coal.

6. For a given facility the quantity of solid residuals is very site dependent. For all the coal-to-fuel and electric generating

processes the largest variation between sites is more than a factor of 4, with a range for surface mined coal of 2.8-5.0 x 10^6 tons of wet solids per year at Navajo, New Mexico to a corresponding range of 0.7-1.3 x 10^6 tons/yr at Gillette, Wyoming. The large quantity of solid residuals at Navajo is associated with the high ash content of the coal.

7. Outstripping all the coal conversion residuals by an order of magnitude are those from surface oil shale processing, where the primary residual is the wet spent shale amounting to 41 x 10^6 tons/yr for a 100,000 bbl/day plant.

Site-Specific Water Consumption and Residual Breakdowns

Figures 1-1 to 1-3 show breakdowns of the consumed water by use and of the wet solid residuals by type. The breakdowns are given in Fig. 1-1 for the production of 250 x 10^6 scf/day of synthetic natural gas by the Lurgi and Synthane processes; in Fig. 1-2 for the production of 100,000 bbl/day of synthetic fuel oil by the Synthoil process and from oil shale by the TOSCO II process; and in Fig. 1-3 for the generation of 3,000 MWe of electricity by coal-fired steam generation. The sites indicated correspond to those called out in Table 1-2.

As noted in the Introduction, five separate categories of water consumption were calculated in some detail. For clarity of graphical presentation, these categories and their subcategories are combined into three major use groups: (1) process and flue gas desulfurization (FGD), (2) cooling and (3) solids disposal, mining and other. Although in the detailed analyses solids disposal is broken down into a large number of categories, for simplicity of presentation they are here

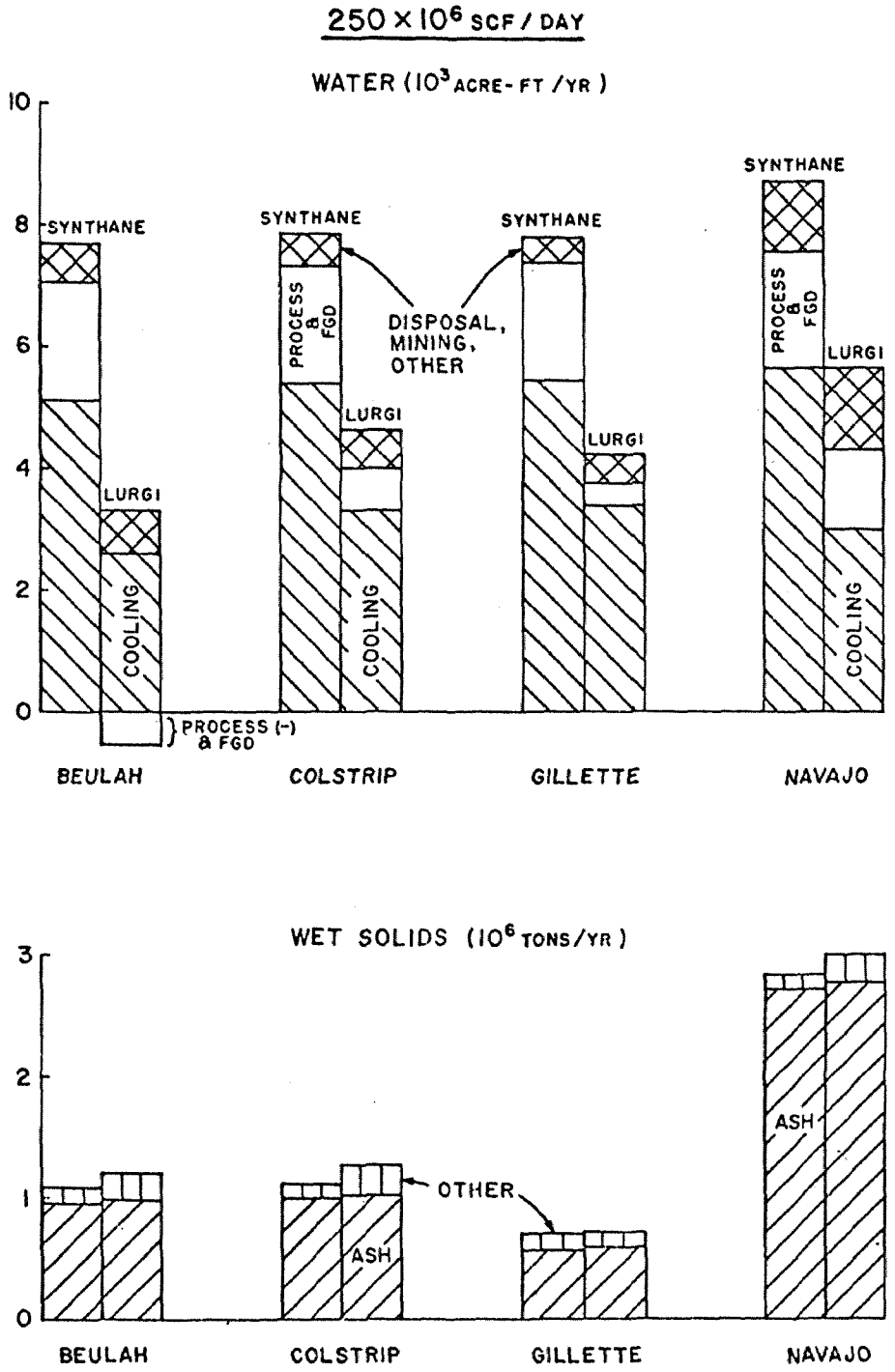

Fig. 1-1. Breakdown of net annual water consumption and wet solid residuals generated in the production of 250 x 10^6 scf/stream day of synthetic natural gas by the Lurgi and Synthane processes at different Western sites.

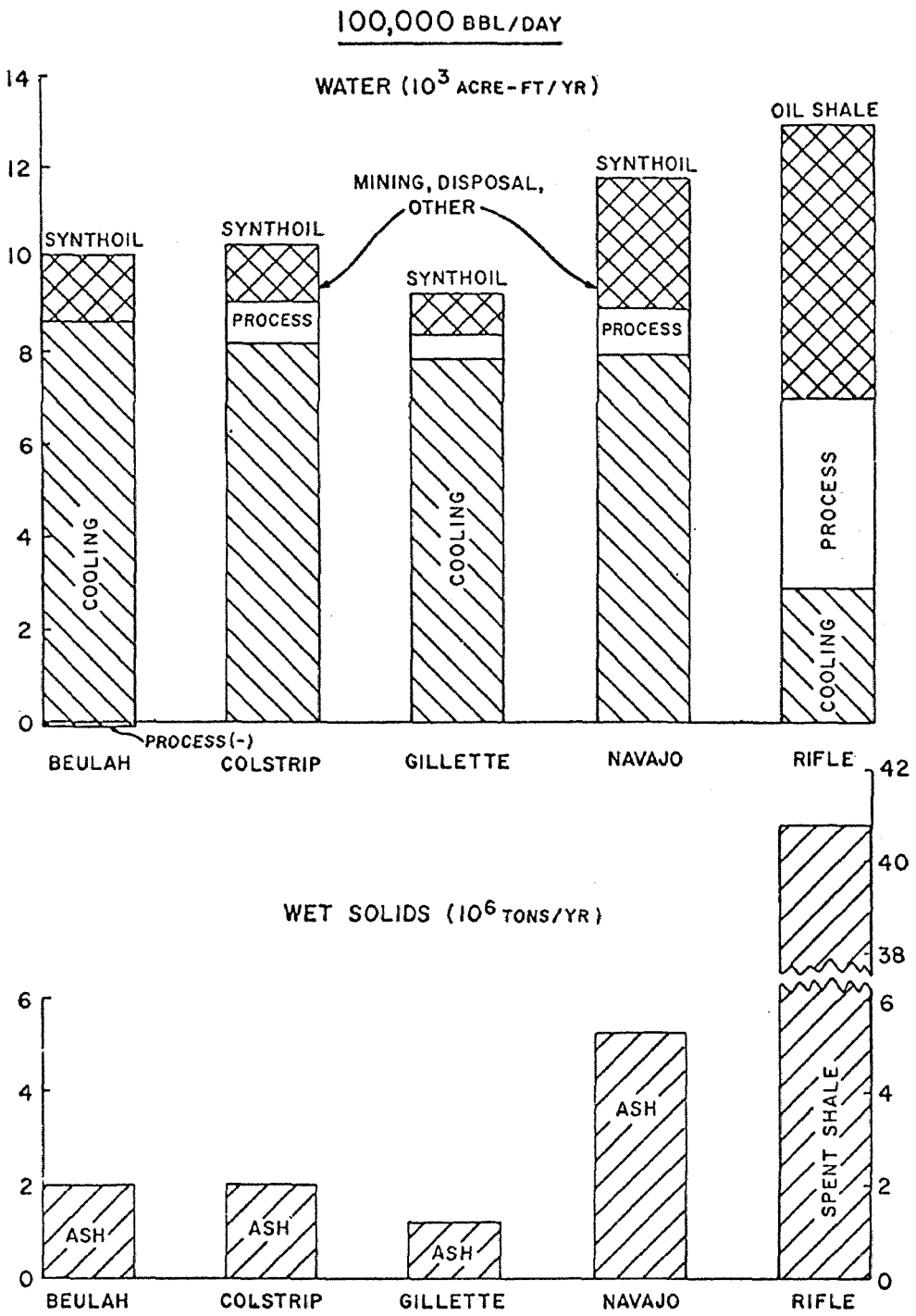

Fig. 1-2. Breakdown of net annual water consumption and wet solid residuals generated in the production of 100,000 bbl/stream day of fuel oil by the Synthoil process at different Western sites and by the TOSCO II oil shale process at Rifle, Colorado.

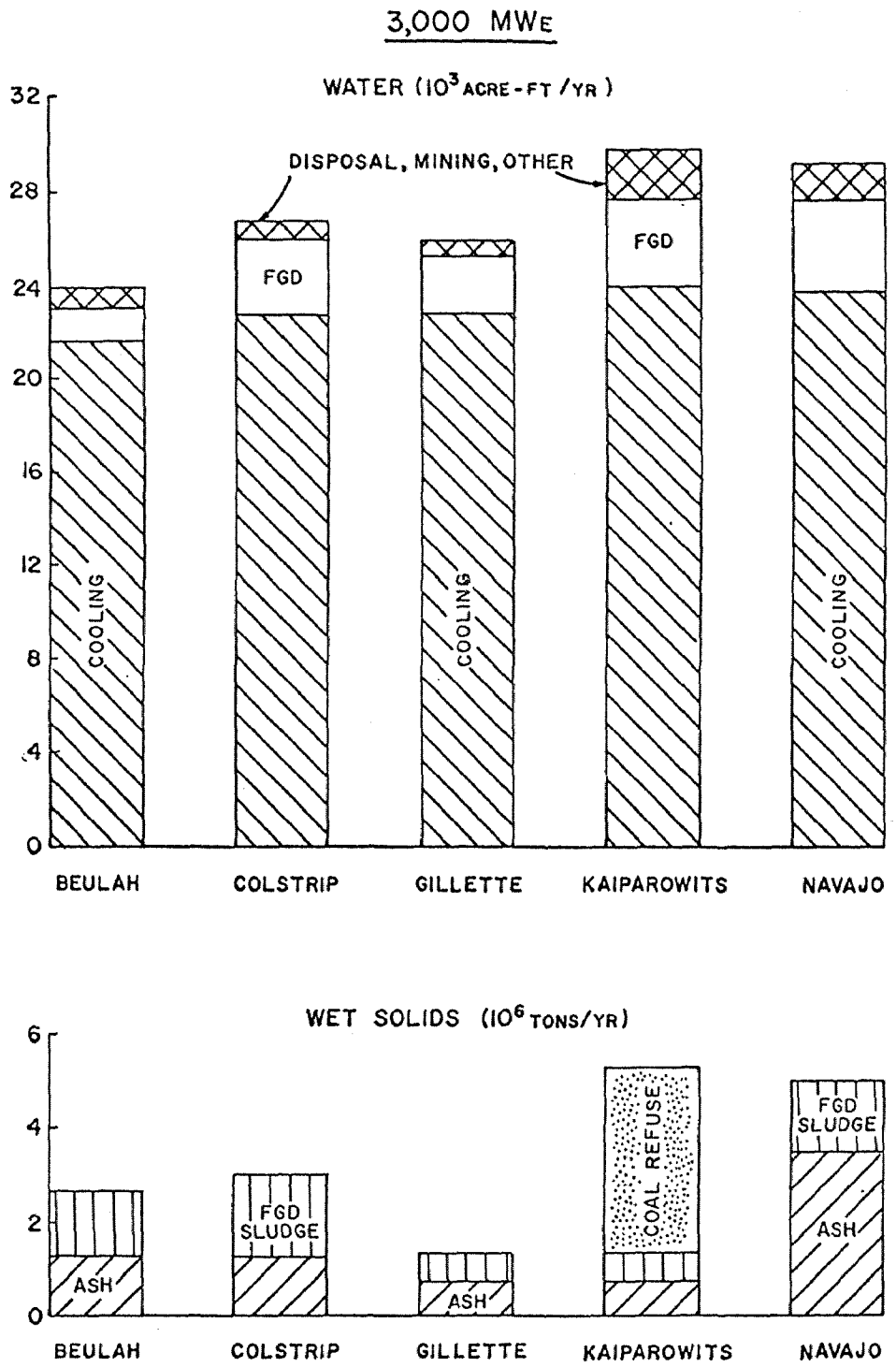

Fig. 1-3. Breakdown of net annual water consumption and wet solid residuals generated in the production of 3,000 MWe/stream day of electricity by coal-fired steam-electric generating plants at different Western sites.

combined into the following main groups: (1) ash, (2) flue gas desulfurization (FGD) sludge, (3) spent shale, (4) coal refuse and (5) other wastes. In the groups of Figs. 1-1 and 1-3, generally only two types of waste are indicated and in Fig. 1-2 only one type, because the contributions of the remaining types are negligibly small on the scales of the figures.

The major conclusions of this phase of the study are the following:

1. The largest quantity of water consumed in all facilities, except oil shale, is the water evaporated for cooling. These water requirements are highest for electric power generation when compared to the other processes, because for the same energy input the generation of electricity has the lowest thermal efficiency.

2. Cooling is needed to dissipate about 75% of the unrecovered heat in the fuel-to-fuel and electric generating plants. Whether to use wet cooling, dry cooling or wet/dry cooling depends on the cost of water, including any necessary treatment, although at least 25-50% of the unrecovered heat in the fuel plants should be dissipated by dry cooling.

3. For electric generation at Navajo, New Mexico when water costs about $2.20/1000 gal, partial dry cooling is more economical than all wet cooling. For this water cost at all other sites, all evaporative cooling systems are preferable if sufficient water is available.

4. Estimates for the Synthoil and Synthane plants are based on all wet cooling of turbine condensers. Cooling water requirements for the Lurgi plants are taken from existing designs and are about 2/3 that for Synthane except at Navajo, New Mexico where it is about 1/2. Wet/dry cooling was not examined but could reduce the cooling water requirement

to about 25% of that used and probably becomes economically viable when cooling water costs $1 to $1.50/1000 gallons evaporated for cooling, although this would have to be checked in a future study.

5. Wet scrubbing of stack gases for sulfur removal represents a large fraction of process water usage in Lurgi and Synthane plants and is a large consumer of water in electric generating plants. The largest quantity of this water leaves as saturated vapor in the flue gas and the amount depends critically on the flue gas saturation temperature.

6. Most of the solid residuals leave the plant boundaries wet and for the Lurgi, Synthane and Synthoil facilities, with surface mined coal, the greatest part of this solid waste is ash with a weight percent water averaging around 25%. For electric power generation, except for the high ash Navajo coal, about half of the residuals is the sludge generated by flue gas desulfurization and the other half is ash. The combined weight percent of water averages around 38%. In underground mining the largest fraction of the solid waste is coal refuse with a 30% weight of water.

7. In surface mining the largest use of water is for dust control, except when water is required for mined land revegetation, which for the sites examined is only necessary at Navajo, New Mexico. The actual quantities of water are quite site dependent. In underground mining, examined only at Kaiparowits, the largest quantity of water is required for coal washing.

8. In oil shale processing, where the tonnage mined and the solid residuals generated are the largest of all the processes, the

water consumption is 1.8×10^3 acre-ft/yr for mining and 4.1×10^3 acre-ft/yr for solids disposal and other uses.

9. Although the principal solid residuals from coal conversion and processing are generally harmless, they do contain trace quantities of harmful elements and compounds. It is possible that the disposal of the large quantities of wet residuals identified could lead to a collective problem in the dispersion of the hazardous materials, but this must be examined.

Regional Water Consumption and Residuals

Fig. 1-4 summarizes the study findings on the aggregated net annual water consumption and wet solid residuals generated in the region of the West in which energy development is focused. The three levels of energy development are based on the Stanford Research Institute energy model with low end-use demand, nominal end-use demand and low nuclear availability.

The major findings and conclusions are:

1. For all levels of energy development considered, the aggregated net regional water consumption in the Western coal and oil shale areas increases by a factor of 9-10 between the years 1980 and 2000, while during the same period the wet solid residuals increase by a factor of 75-100. This large increase in residuals is associated with the role of surface oil shale processing and the need to dispose of the spent shale.

2. On the basis of the quantities of water consumed and residuals generated, Colorado appears to be the state most affected by energy development in the Rocky Mountain Region. This is due principally to the projected rapid growth of a surface processing oil shale industry. Montana

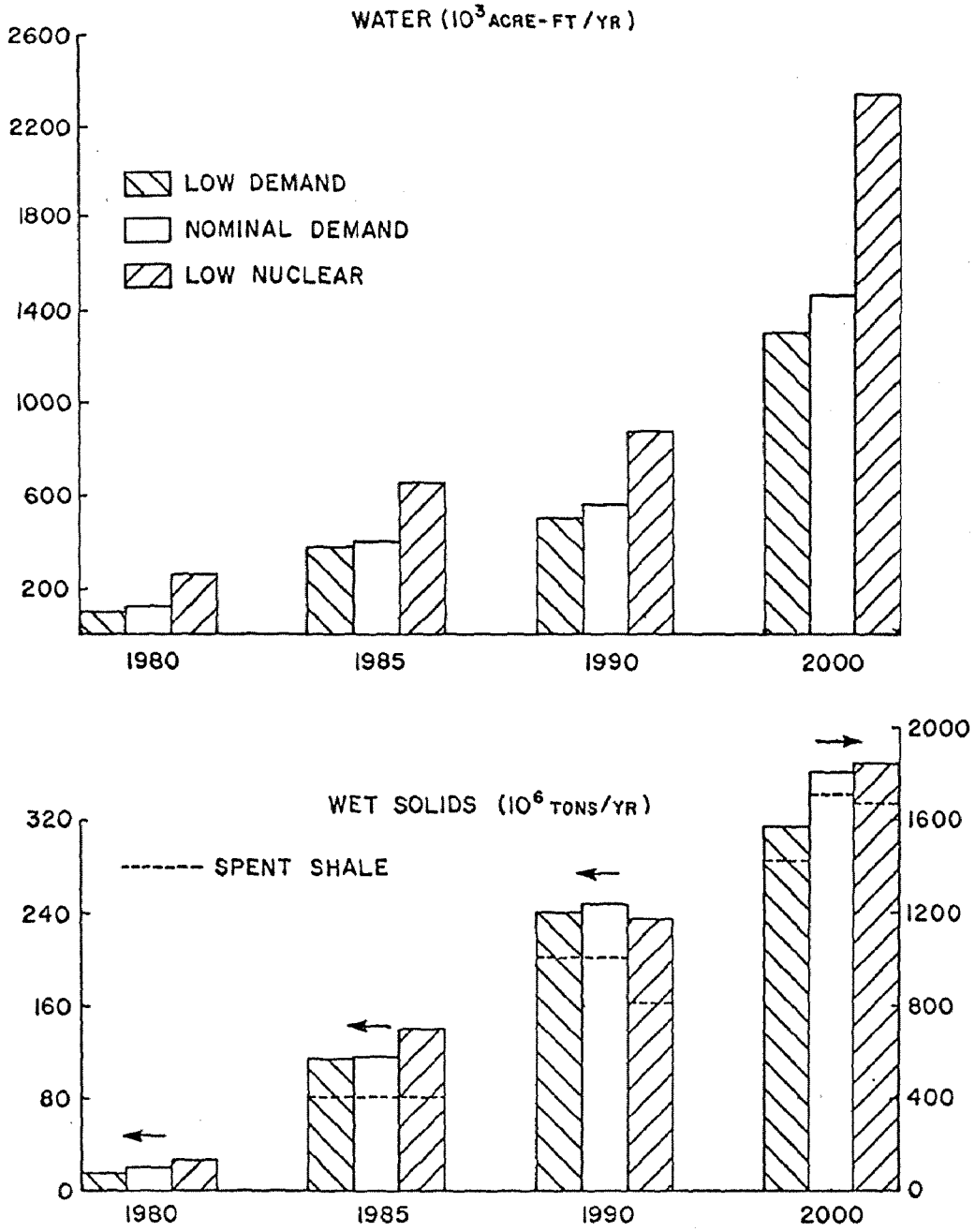

Fig. 1-4. Regional net annual water consumption and wet solid residuals generated in the Western coal and oil shale areas between the years 1980 and 2000 for three levels of energy development.

is the most affected state in the Powder River Region, principally because of the projected growth of slurry pipeline development and coal-fired steam-electric power generation.

3. The actual environmental impacts of siting synthetic fuel and electric power generation facilities cannot be properly assessed without an appropriate determination of local and regional water supply and demand data, and residual disposal methods.

2. COAL CONVERSION PROCESSES

In this section are described the methods used to determine the process water and cooling water requirements for the Synthoil, Lurgi and Synthane coal conversion processes. Because different information is available for each process the details of the procedures differ from process to process. However in each case the same broad outline was used: (i) First the hydrogen balances around the plant were made to determine net process water requirements (in some of the plants using a very moist coal there is a net production of water). (ii) Current designs were used to determine the cooling water requirements for the Lurgi process. (iii) For the Synthoil and Synthane processes the plant thermal efficiency and the quantity of unrecovered heat were estimated. We then determined how this unrecovered heat was lost to the atmosphere, whether directly as up a stack, or through a heat transfer surface. Finally, for that heat which was lost through a heat transfer surface we determined, by economic considerations, whether the heat exchanger could be directly air cooled or whether evaporative water cooling was required. The discussion on cooling together with the relationship between heat lost and water evaporated is given in Section 2.3.

2.1 Synthoil Process

The Synthoil process for hydrogenating coal to a heavy oil has been described in many publications by the Bureau of Mines including References 1* to 4. The only integrated plant design (including hydrogen production) which

* References are given at the end of each section.

we have seen is that of Ref. 3 made for a Wyoming coal and made specifically for cost estimating purposes. For the purpose of estimating water requirements we have chosen to make our own, somewhat simplified design, using the block diagram from Ref. 3 reproduced as Fig. 2-1 in a form suitable for present purposes. The overall material balances, not including hydrogen production, were made using the following rules and are presented in Tables 2-1 to 2-4.

(a) Overall material balances

1. 100,000 bbl/stream day of oil equals 1.4×10^6 lb/stream hr (Ref. 3) and the oil is assumed to be 90 wt. % carbon, 8.5 wt. % hydrogen and 1.5 wt. % oxygen, nitrogen and other elements.

2. We assume that 5 barrels of oil are produced from each ton of carbon in the coal. This is the average of published results:

Ref. No.	bbl oil/ton carbon in coal
1	5.3
2	5.0
3	4.7
used in this work	5.0

The feed to the reactors (streams 2 and 5) must, therefore, contain 1.67×10^6 lb/stream hour of carbon. Coal is assumed dried to 0.5 wt. % moisture. This moisture is assumed to remain in the product oil.

3. Hydrogen requirements have been given as:

Ref. No.	scf H_2/bbl oil
1	4200
2	4730
3	4830
used in this work	4700

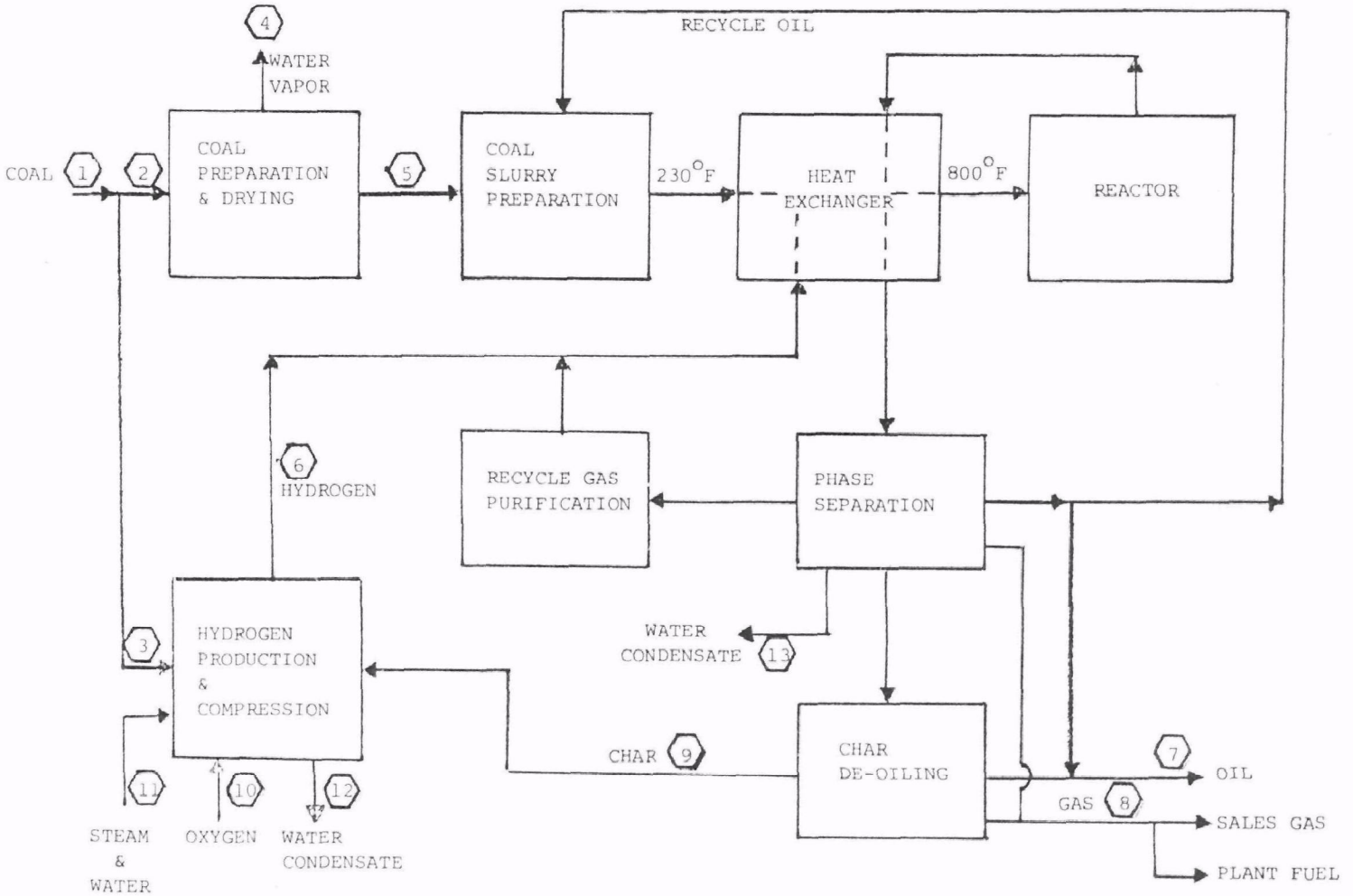

Fig. 2-1. Synthoil process.

Table 2-1. Material balance on Synthoil plant exclusive of hydrogen production for Colstrip, Montana.

Units: 10^3 lb/stream hr

Stream No.		Total	Moisture	C	H	O
2	Coal, as received	3303	816	1670	105	324
4	Water lost in drier	816	804			
5	Coal, dry	2500	12	1670	105	324
6	Make-up hydrogen	148		19	103	26
7	Oil	1490	12	1340	127	
8	Gas			246	51	
9	Char			103		
13	Water from phase separation	296			30	266

Table 2-2. Material balance on Synthoil plant exclusive of hydrogen production for Beulah, North Dakota.

Units: 10^3 lb/stream hr

Stream No.		Total	Moisture	C	H	O
2	Coal, as received	4130	1486	1670	112	492
4	Water lost in drier	1473	1473			
5	Coal, dry	2657	13	1670	112	492
6	Make-up hydrogen	148		19	103	26
7	Oil	1490	13	1340	127	
8	Gas			246	36	
9	Char			103		
13	Water from phase separation	464			52	412

Table 2-3. Material balance on Synthoil plant exclusive of hydrogen production for Gillette, Wyoming.

Units: 10^3 lb/stream hr

Stream No.		Total	Moisture	C	H	O
2	Coal, as received	3381	947	1670	115	432
4	Water lost in drier	935	935			
5	Coal, dry	2446	12	1670	115	432
6	Make-up hydrogen	148		19	103	26
7	Oil	1490	12	1340	127	
8	Gas			246	46	
9	Char			103		
13	Water from phase separation	408			45	363

Table 2-4. Material balance on Synthoil plant exclusive of hydrogen production for Navajo/Farmington, New Mexico.

Units: 10^3 lb/stream hr

Stream No.		Total	Moisture	C	H	O
2	Coal, as received	3532	438	1670	122	338
4	Water lost in drier	422	422			
5	Coal, dry	3110	16	1670	122	338
6	Make-up hydrogen	148		19	103	26
7	Oil	1490	16	1340	127	
8	Gas			246	63	
9	Char			103		
13	Water from phase separation	313			35	278

The hydrogen in stream 6 is, therefore 5.16×10^4 moles/stream hr or 103×10^3 lb/stream hr. Stream 6 is taken to be 97% H_2 and 3% CO.

4. The carbon in the char has been given as:

Ref. No.	Carbon in char as % of carbon in coal
1	6
3	about 6.3
used in this work	6.2

so the char (stream 9) contains 103×10^3 lb/stream hr of carbon; the hydrogen and oxygen are assumed to be negligible.

5. The oxygen in the coal is assumed converted as follows:

   10% to gas and oil.

   26×10^3 lb/stream hr reacts with CO in stream 6 to yield CO_2 which remains in the gas.

   The balance is converted to water, stream 13.

6. The balance of the carbon and hydrogen appear in the gas.

b. Hydrogen production

There are many ways to make hydrogen: (i) The gas can be put through a steam reforming reaction (this is quite efficient but necessitates burning char and coal for plant energy and both char and coal contain sulfur). (ii) The char, with added coal, can be partially oxidized (gasified) to make synthesis gas which can be converted to H_2 by the shift reaction (this procedure yields the sulfur as H_2S which can be readily removed; the gas produced in the oil plant is also stripped of H_2S and is then burnt as a char fuel). We have assumed that gasification is used and the hydrogen production train is shown in Figure 2-2. Extrapolating from Ref. 3 the following rules were used to calculate the various water streams of Figure 2-2.

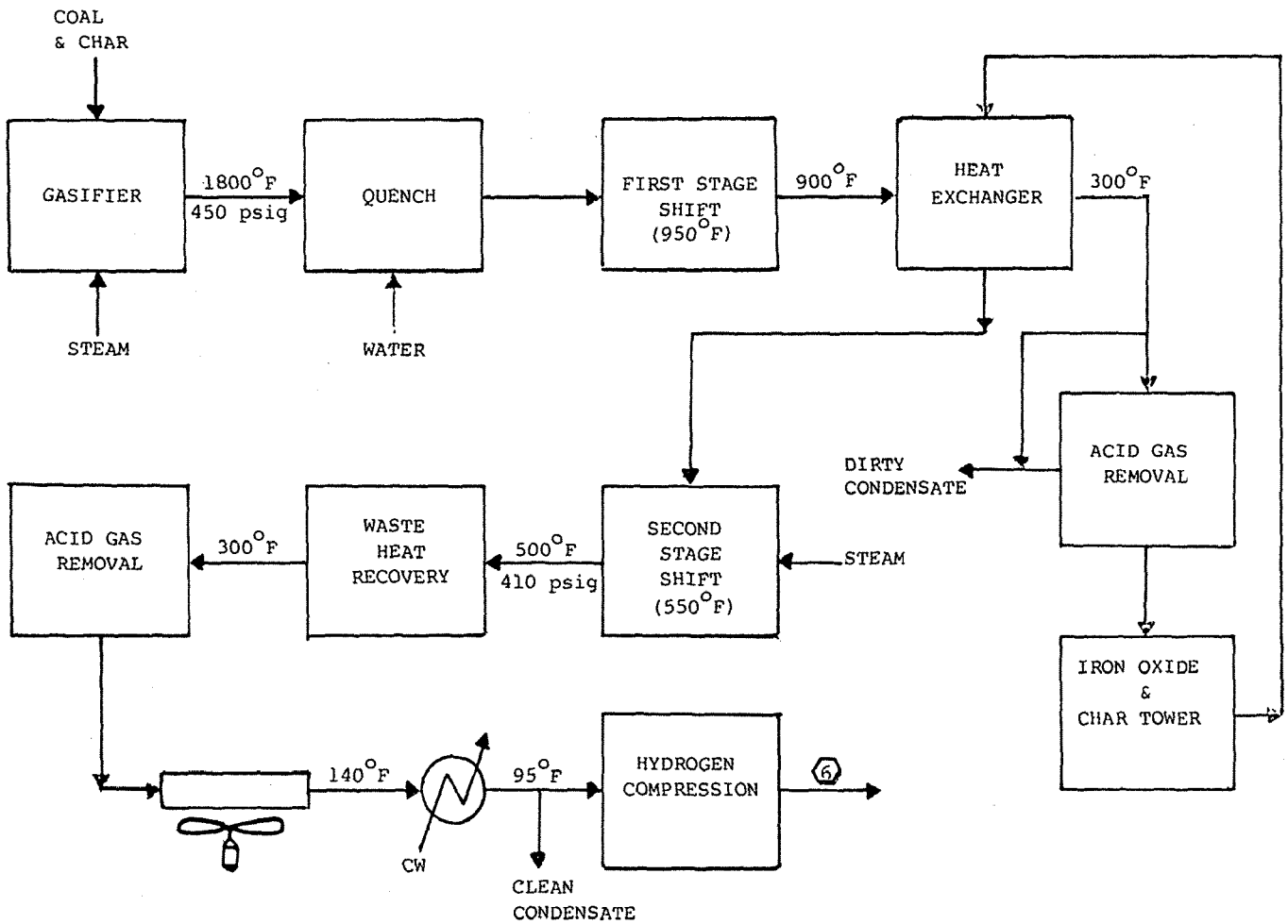

Fig. 2-2. Hydrogen production train.

1. The gasifier is pressurized and yields hydrogen at 390 psig which is compressed to 4000 psig for use in the Synthoil reactor.

2. The gasifier off-gas comes off at 1800°F and contains 2.22×10^4 moles/stream hour H_2 and 3.10×10^4 moles/stream hr CO. At Beulah, North Dakota more synthesis gas is produced as explained in rule No. 8. After shift reaction this stream will give stream 6.

3. The gasifier is supplied with 0.5 lb of steam/lb of carbon fed to the gasifier.

4. Enough coal is added to the char so that when the material balance is complete the gasifier will be in thermal balance. The coal carbon required varies with moisture in the coal.

5. The carbon in the coal plus char appears as $CO + CO_2$ which gives the CO_2 rate.

6. The water in the off-gas satisfies the hydrogen balance.

7. The oxygen fed satisfies the oxygen balance.

8. In one case, Beulah, North Dakota, extra $H_2 + CO$ are made and used as fuel because there is not enough energy in the Synthoil gas to drive the plant.

9. The gases leave the first shift reactor in equilibrium at 750°F and the second shift reactor in equilibrium at 550°F. The gasifier off-gas is quenched by direct addition of water. This, in fact, proved to yield a surplus of steam for the shift reaction and a waste heat recovery unit would improve the plant efficiency.

Total hydrogen balances are presented in Table 2-5.

Table 2-5. Water equivalent hydrogen balance of Synthoil plant at four sites.

	10^3 lb/stream hr			
IN	Colstrip, Mont.	Beulah, N.D.	Gillette, Wyo.	Navajo, N.M.
Moisture in as-received coal to liquefaction	816	1486	947	438
Water equiv. of hydrogen in as-received coal to liquefaction	945	1008	1035	1098
Moisture in as-received coal to gasifier	170	399	178	83
Water equiv. of hydrogen in as-received coal to gasifier	197	270	194	207
Total steam to hydrogen production	495	467	511	529
Quench water to hydrogen production	712	670	528	581
Total	3335	4300	3393	2936
OUT				
From drying coal to liquefaction	804	1473	935	422
Total dirty process condensate	785	1101	759	635
Clean process condensate	144	96	132	139
Water equiv. of hydrogen in product oil	1143	1143	1143	1143
Moisture in product oil	12	13	12	16
Water equiv. of hydrogen and moisture in gas produced	459	465*	414	567
Total	3347	4291	3395	2922

* Includes the surplus synthesis gas produced in gasifier and burned as plant fuel.

c. Plant energy requirements

An estimate of the energy needed to drive the plant was obtained by adding the following requirements:

coal

slurry pump

slurry and hydrogen heating

char deoiling

oxygen production

hydrogen plant steam

hydrogen plant waste heat recovery

hydrogen plant CO_2 removal

gasifier lock hoppers

hydrogen compression

plant electricity

water treatment and other low temperature energy consumers

stack gas losses

These are the principal, but not all the energy loads in the plant. The approximate heat loads of the plant are shown in Table 2-6. Since all the energy requirements may not have been found, the stated efficiencies may be high. This will not affect the cooling water. Much the most important difference from plant to plant is the energy consumed in drying coal. This is low enough in Navajo/Farmington, New Mexico, that the product sold includes quite a lot of gas. Drying coal consumed so much energy in Beulah, North Dakota, that some gasifier off-gas had to be burnt.

Table 2-6. Approximate total heat load of Synthoil plant at four sites.

	10^9 Btu/stream hr			
	Colstrip, Mont.	Beulah, N.D.	Gillette, Wyo.	Navajo, N.M.
Drying coal to liquefaction	0.90	1.65	1.05	0.47
Slurry pumps	0.36	0.39	0.36	0.45
Heat exchanger and phase separator	0.80	0.82	0.79	0.89
Char deoiling	0.45	0.45	0.45	0.45
Coal and char feeding to hydrogen production	0.03	0.04	0.03	0.03
Acid gas removal in hydrogen production	1.00	1.04	0.93	0.93
Waste heat recovery in hydrogen production	(-0.76)	(-0.94)	(-0.56)	(-0.54)
Hydrogen compression	0.97	0.97	0.97	0.97
Oxygen production	0.92	1.16	0.72	0.76
Electricity generation	0.32	0.32	0.32	0.32
Water treatment and other low level uses	0.50	0.50	0.50	0.50
Boiler stack gas loss	0.61	0.72	0.62	0.58
Approximate total heat load	6.10	7.12	6.18	5.81

In calculating Table 2-6 we used the following procedures. The slurry contains two pounds of oil per pound of coal and the pumps were 70% efficient. The heat loads to the dissolver heating section and char deoiling section were estimated using the detailed design of Ref. 3. Coal and char are assumed fed to the gasifier using a lock hopper; lock hopper compressor requirements were scaled from Ref. 5. The acid gas removal system was assumed to be the Benfield hot potassium carbonate system[6]. Compressor energies are listed in Table 2-7 which includes other compressors needed for the Synthane plant. The heat rate to all turbine drives was 11,700 Btu/kw-hr. The energy needed to drive an oxygen plant is the energy to compress air to 90 psia plus the energy to compress oxygen from 20 psia to gasifier pressure. The electricity plant produces 27,000 kw. The low level uses of heat are an arbitrary addition. The boiler stack gas loss is 10% of the fuel burnt.

The approximate plant thermal efficiencies are shown in Table 2-8.

d. Ultimate disposal of unrecovered heat

The plants must be in thermal balance. That part of the energy in the feed coal which is not sold as oil or gas must leave the plant in some unrecoverable low level form. To determine whether cooling water is needed we estimated the low level heat that leaves the plant (i) directly through stacks (including water vapor) by convection, etc., and (ii) by transfer to water in a cooling tower. One big load, the condensers in the regenerators of a Benfield CO_2 removal system, is dry cooled (as is currently practiced in selected cases) which accounts for about 2/3 of the dry cooling load. Evaporative cooling was used for all compressor interstage coolers and the condensers on all steam driven turbines for all plant moving machinery and electrical generation. This accounts for about 2/3 of the evaporative cooling and could, in extreme water short areas, be replaced by dry cooling.

Table 2-7. Gas compressor energy and interstage cooling requirements for Synthoil and Synthane plants.

Conditions: Stage entry temperature 95°F; polytropic efficiency 77%

Basis: 2000 lb gas/hr

Gas	Pressures (psia) Inlet	Pressures (psia) Exit	No. of Stages	Drive Turbine (kw)	Interstage Coolers (10^3 Btu/hr)
Air*	15	90	3	59	200**
Oxygen	20	465	4	92	240
Oxygen	20	1015	5	120	340
Hydrogen	405	4015	3	1115	2880***

* 4.32 lb air yield 1 lb oxygen.

** Aftercooler to 95°F included.

*** Forecooler, 140° to 95° included.

Table 2-8. Approximate thermal efficiencies of Synthoil plants.

	10^9 Btu/stream hr			
	Colstrip, Montana	Beulah, N.D.	Gillette, Wyoming	Navajo, N.M.
Heating value of coal feed	34.4	35.8	33.9	34.8
Heating value of product oil	26.2	26.2	26.2	26.2
Heating value of gas sold	0.6	0	0.2	1.7
Unrecovered heat	7.6	9.6	7.5	6.9
	34.4	35.8	33.9	34.8
Overall thermal efficiency	78%	73%	78%	80%

The results are shown in Table 2-9. Direct losses are caused by coal drying, boiler stack losses, char deoiler stack losses, electricity used, pump and compressor losses and an allowance for convection losses. At Beulah, North Dakota, some gasifier off-gas is burnt for fuel and as this is wet the stack losses are higher than at other sites. The air cooling losses are the Benfield acid gas removal regenerator condenser and cooling of gas, oil and hydrogen from 300 to 140°F. At Beulah, North Dakota, the recovery of condensed water from the Benfield system increases the cooling load over other sites. The remaining losses have been assigned to wet cooling so as not to understate the water requirements. As discussed in Section 2.3, all turbine condensers and compressor interstage coolers are wet cooled.

2.2 Process Water Streams

The water consumed for the process is shown in the summary tables of Section 10 and was calculated from the process description as follows.

(i) The dirty plant condensate (which is about half from the oil section of the plant and about half from the gasification section of the plant) was assumed sent to water treatment where about 1.8% of the water was lost (see Table 2-10). The sludge produced in biotreatment, which is 80% moisture, is 0.75% of the weight of the treated water; the water in the sludge is 0.6% of the weight of the treated water.

(ii) Clean process condensate was not sent to treatment.

A sample calculation for the Synthoil process at Colstrip, Montana follows:

Table 2-9. Ultimate disposition of unrecovered heat in Synthoil plants.

Points of load	Colstrip, Montanta	Beulah, N.D.	Gillette, Wyoming	Navajo, N.M.
	10^9 Btu/stream hr			
Coal drying	0.90	1.65	1.05	0.47
Stack loss, including char deoiling	0.81	1.02	0.82	0.78
Electricity used, slurry pump loss	0.20	0.21	0.20	0.23
Other direct losses	0.19	0.22	0.13	0.22
Subtotal - direct loss	2.1	3.1	2.2	1.7
Acid gas removal regenerator condenser	1.00	1.44	0.93	0.93
Air cooling in phase separator and other process streams	0.40	0.46	0.47	0.47
Subtotal - dry cooling	1.4	1.9	1.4	1.4
Turbine drive condenser	1.82	2.02	1.68	1.77
Compressor interstage cooling	0.58	0.65	0.51	0.53
Additional wet cooling load	1.70	1.93	1.71	1.62
Subtotal - wet cooling	4.1	4.6	3.9	3.8
Total unrecovered heat	7.6	9.6	7.5	6.9

Table 2-10. Water lost in condensate water treatment.

Basis: 10^3 lb water treated.

	Gas plant	Oil plant
lb NH_3 in wastewater*	3	14
lb water lost with NH_3 in 40% solution	5	21
lb BOD*	13	17
lb wet sludge (80% moisture)**	6.5	8.5
lb water in sludge	5	7
Total water lost, with ammonia & in sludge	10	28

* Typical analysis.

** 0.1 lb dry sludge/lb BOD removed, Ref. 7.

	10^3 lb/stream hr
Stream and quench water fed (Table 2-5)	1207
Clean condensate recovered	(-144)
Dirty water to treatment	(-785)
Lost in treatment	14
Net process water consumed	292

$$292 \times 10^3 \frac{\text{lb}}{\text{stream hr}} \times \frac{1 \text{ gal}}{8.33 \text{ lb}} \times \frac{0.9 \text{ stream hr}}{\text{calendar hr}} \times \frac{1 \text{ calendar hr}}{60 \text{ calendar min}}$$

$$= 526 \text{ gal/calendar min .}$$

Water in condensate treatment sludge =

$$785 \times 10^3 \frac{\text{lb}}{\text{stream hr}} \times \frac{0.006 \text{ lb water in sludge}}{\text{lb water treated}}$$

$$\times 0.0018 \frac{\text{gals/calendar min}}{\text{lb/stream hr}} = 9 \text{ gals/calendar min .}$$

The boiler makeup water has been taken to be 100 gal/calendar min more than the steam quantity shown in Table 2-5. The demineralizer waste is taken to be 50% moisture and to have a solids content of 1.6 times the total dissolved solids in the makeup water. This corresponds to complete deionization of the makeup water and a regenerant usage of 160% of the stoichiometric values. The makeup water is usually source water but may be treated process condensate if this has not all been used for cooling. Table 2-11 was used to calculate demineralizer waste. A sample calculation to estimate boiler demineralizer waste at Colstrip, Montana follows:

Table 2-11. Demineralizer water treatment waste.

	tons wet sludge (50% moisture) per 1000 gal water evaporated
Colstrip, Montana	0.0053
Beulah, North Dakota	0.0057
Gillette, Wyoming (Yellowstone)	0.0053
Gillette, Wyoming (North Platte)	0.0055
Rifle, Colorado	0.0032
Navajo/Farmington, New Mexico	0.0040
Kaiparowits/Escalante, Utah	0.0077
Treated process condensate	0.0096

Steam makeup:

$$495 \times 10^3 \frac{\text{lb}}{\text{stream hr}} \times \frac{0.0018 \text{ gal/calendar min}}{\text{lb/stream hr}} + 100 \frac{\text{gal}}{\text{calendar min}}$$

$$= 991 \text{ gal/calendar min} .$$

Wet sludge:

$$\frac{991 \text{ gal}}{\text{calendar min}} \times \frac{0.053 \text{ tons}}{1000 \text{ gals}} \times \frac{1440 \text{ min}}{\text{day}} = 7.56 \text{ tons/calendar day} .$$

Dry solids:

$$0.50 \times \text{Wet sludge} = 0.5 \times 7.56 \frac{\text{tons}}{\text{calendar day}} = 3.78 \text{ tons/calendar day} .$$

Water in waste:

$$\frac{7.56 \text{ tons wet sludge}}{\text{calendar day}} \times \frac{0.5 \text{ tons water}}{\text{tons sludge}} \times \frac{2000 \text{ lb/ton}}{1440 \text{ min/day}} \times \frac{1 \text{ gal}}{8.33 \text{ lb}}$$

$$= 7.56 \text{ tons wet sludge/calendar day} \times 0.0834 \frac{\text{gal water/calendar min}}{\text{tons sludge/calendar day}}$$

$$= 0.6 \text{ gal/calendar min} .$$

2.3 Cooling Water

Some of the heat not recovered in coal conversion plants is lost to the atmosphere through a heat transfer surface. This surface can be directly cooled by air (which is called dry or air cooling) or it can be cooled by circulating cooling water which is itself cooled in an evaporative cooling tower (which is called wet or evaporative cooling). In general wet cooling requires a lower capital investment than dry cooling, can cool to a lower

temperature, but does require water. Water is not free. It costs about 2¢ to move one thousand gallons of water one mile through a horizontal pipeline. It costs $0.50 to $1.00/thousand gallons of water evaporated to treat water in a circulating cooling system and to dispose of the solid residues[8]. The decision as to whether to use wet or dry cooling will depend on the cost of water and its treatment, and will be different for each point of cooling in the plant.

The cooling of plant process streams has been evaluated[9] and based on that evaluation all process streams have been assumed to be cooled to 300°F with waste heat recovery, from 300° to 140°F by dry cooling, and below 140°F by wet cooling. The cooling water requirement depends on the temperature to which the stream must be cooled. The cooling water required for process cooling is very low and this is corroborated in many actual plant designs.

The gas purification system regenerator condenser cooler, which is a very large load, is discussed in Ref. 9. This will be dry cooled by using a hot potassium carbonate system for the Synthoil and Synthane processes.

The gasifier off-gas in the Synthane process is quenched to 270°F by direct water contact. As discussed in Ref. 9 the circulated water is cooled in a dry cooler.

Much the most important use of wet cooling is for the condensers on steam turbine drives used to drive gas compressors, slurry pumps, electric generators and other mechanical loads on the plant. For this type of steam turbines, the thermal efficiency reaches its maximum when the exhaust pressure is between 3 and 5 inches Hg. absolute. The corresponding condenser temperatures are 115 and 134°F. Typical turbine inlet steam conditions are temperature in the range from 700 to 900°F and pressure in the range from 715 to 915 psia.

Based on these inlet conditions, a typical turbine efficiency of 80%, and a bearing efficiency of 97.5%, the heat rate to the turbine per kw power output is about 11,700 Btu/hr when the condenser temperature is 115°F, and goes up linearly to about 12,200 Btu/hr when the temperature is 134°. The corresponding heat rejection rates in the condenser for these two temperatures are about 8,200 Btu/hr and 8,700 Btu/hr. The thermal efficiency of the cycle when the condenser temperature is between 115 and 134°F is therefore approximately 30%.

The economics of whether dry cooling or wet cooling should be used have been analysed in a manner similar to Ref. 9 for the following four sites: Colstrip, Montana; Beulah, North Dakota; Gillette, Wyoming; and Navajo/Farmington, New Mexico. In the dry cooling calculations, the condenser is designed to operate in the temperature range from 115 to 134°F. The condenser is sized for a maximum dry bulb temperature which would not be exceeded for more than 10 hours a year. In the winter time when the temperature is lower, the cooling fans are gradually shut off by automatic control of blade pitch so that the condenser temperature does not drop below 115°F. This saves fan energy.

In the wet cooling tower calculations, the condenser is designed to operate at the lowest temperature, 115°F. The circulating water is designed to be between 80 and 105°F, and the wet tower is designed for the highest wet bulb temperature in the summer. In the winter time when the entering air is dryer and colder and evaporation is more efficient , part of the circulating cooling water can be bypassed from the tower allowing part of the cooling tower to be shut off. This saves fan energy and water. Tower calculations were made using Ref. 10 based on the optimization of both dry and wet towers.

If the fan energy is assumed to be 2¢ per kw-hr, the breakeven cost for water is only about $1.10 to $1.20 per 1000 gallons evaporated for these four sites. The water consumption rate, which ranges from 5.2 lb/kw-hr to 5.7 lb/kw-hr, is shown in Table 2-12, expressed in Btu/lb of water evaporated. In our calculations, we have taken the heat rate to the turbines to be 11,700 Btu/kw-hr and the condenser load to be 8,200 Btu/kw-hr.

Although there will be circumstances when water costs more than $1.20/thousand gallons and dry cooling will be economical, we have, throughout this study, assigned all turbine condenser cooling loads to wet cooling.

The derivation of the cooling water requirement shown in the summary charts can be seen from the following example for a Synthoil plant at Colstrip, Montana:

Wet cooling load (Table 2-9) 4.1×10^9 Btu/stream hr ÷

1500 Btu/lb water evaporated (Table 2-12) x

$$0.0018 \frac{\text{gal/calendar min}}{\text{lb/stream hr}} = 4{,}919 \text{ gals/calendar min} .$$

Treatment of cooling water yields waste sludges which are about 50% moisture. These sludges are (i) derived from lime-soda softening and (ii) derived from evaporation of the final blowdown water. For estimating purposes we did not use cooling tower blowdown for any other water requirement. We assumed sidestream softening to remove hardness with clarification to remove dirt introduced from the air. At all the sites the underflow from the sidestream clarifier was enough blowdown to prevent excessive chloride in the circulating water (see Ref. 8). This underflow is what has been called the

Table 2-12. Water evaporation rates for wet cooling.

Location	Btu/lb water evaporated
Colstrip, Montana	1500
Beulah, North Dakota	1576
Gillette, Wyoming	1488
Navajo/Farmington, New Mexico	1436

insoluble cooling treatment waste in Table 2-13. When the makeup water was treated process condensate water (assumed to have 200 mg/l Cl^-) a liquid blowdown was required in addition. The solids dissolved in this liquid blowdown formed what we have called the soluble cooling treatment waste in Table 2-13.

In the coal conversion plants treated process condensate was used as makeup to the cooling tower. In some cases there was too much condensate and the additional water was assumed used for boiler feed. In other cases source water had to be added to the condensate to supply enough makeup. When a mixed water source was used for the cooling tower we calculated the sludges individually for the two sources separately and not for a blended water.

The wastes produced at each site are shown in Table 2-13. An example of the calculation follows for cooling water treatment waste in a Synthoil plant at Colstrip, Montana:

	10^3 lb/stream hr	gal/calendar min
Dirty water to treatment (Table 2-5)	785	
Less: water lost in treatment 1.8% of entry	14	
Treated water	777	
Clean condensate	144	
Total condensate evaporated in cooling tower	921	1658
Source water evaporated in cooling tower		3261
Total water evaporated in cooling tower		4919

Table 2-13. Cooling water treatment waste.

Water	tons wet sludge (50% moisture) per 1000 gal water evaporated	
	insoluble waste	soluble waste
Colstrip, Montana	0.0060	
Beulah, North Dakota	0.0070	
Gillette, Wyoming (Yellowstone)*	0.0072	
Gillette, Wyoming (North Platte)**	0.0078	
Navajo/Farmington, New Mexico	0.0065	
Treated process condensate	0.0049	0.0067

* Used for power plant and gas plants.

** Used for oil plant.

Insoluble waste =

$$3261 \frac{\text{gals}}{\text{c. min}} \times \frac{0.0060 \text{ tons}}{1000 \text{ gal}} \times \frac{1440 \text{ min}}{\text{day}}$$

$$+ 1658 \frac{\text{gals}}{\text{c. min}} \times \frac{0.0049 \text{ tons}}{1000 \text{ gal}} \times \frac{1440 \text{ min}}{\text{day}}$$

$$= 40 \text{ tons wet sludge/calendar day} \cdot$$

Soluble waste =

$$1658 \frac{\text{gals}}{\text{c. min}} \times \frac{0.0067 \text{ tons}}{1000 \text{ gal}} \times \frac{1440 \text{ min}}{\text{day}} = 16 \text{ tons wet sludge/calendar day} \cdot$$

The makeup water to the cooling tower was arbitrarily taken to be 1.03 times the water evaporated corresponding to a nominal 34 cycles of concentration. The makeup not evaporated or lost in sludge was assigned to drift or leakage.

2.4 Lurgi Process

a. Process streams

The Lurgi process for the production of substitute natural gas is a proprietary process for which not all details are available. However complete plant designs have been made for four plants (Refs. 11 through 16). We have examined these published designs and from them made various rules from which to derive the water requirements at the four sites of the present study.

To derive process water streams the following rules were used:

1. Product gas has a composition of 93 vol. % methane and 4 vol. % hydrogen, and a heating value (HV) of 950 Btu/scf. The molecular weight of the product gas is 16.2 lb/lb mole and the scale of the plant production is 250×10^6 scf/stream day = 9.9×10^9 Btu/stream hr.

2. HV of product gas/HV of gasifier feed coal = 0.678. Therefore the HV of the as-received coal to the gasifier is 14.60×10^9 Btu/stream hr.

3. lb of O_2 to gasifier/lb of carbon and hydrogen in as-received coal to gasifier = 0.455.

4. lb of steam feed to gasifier/lb of carbon and hydrogen in as-received coal to gasifier = 1.80.

5. Water decomposed by chemical reaction to supply hydrogen = 775×10^3 lb/stream hr.

6. Purification is accomplished by the Rectisol process. Steam needed is 128×10^3 lb/stream hr and 124×10^3 lb/stream hr of process condensate is discharged from the purification stage.

7. Methanation water discharged is at 17.4% of the steam fed to gasifier.

8. All sulfur and nitrogen in coal are converted to H_2S and NH_3 respectively and purged out during purification.

These rules give the hydrogen balances shown in Table 2-14. Using the procedure of Section 2.2 for a gas plant (1.0 wt. % of dirty condensate is lost in biotreatment and water in the sludge is 5 wt. % of the treated water) the process water entries in the summary tables have been calculated. As with Synthoil, 100 gal/calendar min has been added to the boiler makeup water shown in Table 2-14.

Table 2-14. Water equivalent hydrogen balance of Lurgi plant at four sites.

	10^3 lb/stream hr			
IN	Colstrip, Montana	Beulah, N.D.	Gillette, Wyoming	Navajo, N.M.
Moisture in as-received coal	419	770	484	218
Water equiv. of hydrogen in coal	488	520	529	547
Steam to gasifier and purification	1672	1790	1770	1732
	2579	3080	2783	2497
OUT				
Dirty process and purification condensate	1313	1782	1476	1172
Clean condensate from methanation	269	289	286	279
Water equiv. of hydrogen in byproduct, H_2S, and NH_3	45	42	20	35
Water equiv. of hydrogen in product gas	945	945	945	945
	2572	3058	2727	2431
Coal feed to gasification	1695	2140	1728	1756
Higher heating value of as-received coal $(\frac{Btu}{lb})$	8611	6822	8449	8310
Moisture in as-received coal (%)	24.7	35.0	28.0	12.4

b. Cooling

Because of the proprietary nature of the Rectisol gas purification system and other parts of the plant we could not determine the auxiliary heat loads to drive the plant. Instead we used the design efficiency from Refs. 11, 12, 14 and 15 together with the design cooling water systems as used in the Navajo area. Although much more cooling water is used in the design of Ref. 14, we can not justify this.

The assumptions and results are given in Table 2-15. The assumed thermal efficiencies are taken from the references. The higher efficiency in New Mexico is mostly caused by the lower coal moisture. The by-product heating value comes from the references. The total product heating value includes the gas at 9.9×10^9 Btu/stream hr. From the plant efficiency the total plant coal feed can be calculated and so can the coal fed as fuel. The coal burnt as fuel requires stack gas scrubbing discussed in a later section. The heat lost to wet cooling is taken to be 28% of the unrecovered heat as used in the designs in New Mexico. From this heat the water evaporated for cooling was calculated using Table 2-12 and the summary sheets were completed using the procedure of Section 2.3.

2.5 Synthane Process

A design, for cost estimating purposes, has been made for the Synthane process[17]. From it we have taken the hydrogen balance shown in Table 2-16. Because we do not have enough information to distinguish between coals fed to the Synthane process, Table 2-16 was used at all four sites and the process streams calculated according to Section 2.2 for gas plants are shown in detail at all sites.

Table 2-15. Assumptions and calculations on thermal efficiency of Lurgi plants.

	Colstrip, Montana	Beulah, N.D.	Gillette, Wyo.	Navajo, N.M.
Assumed thermal efficiency (%)	65	65	65	70
Byproduct heating value as % HHV of gas	13	12	13	20
Total product HV (10^9 Btu/stream hr)	11.19	11.09	11.19	11.88
Plant coal feed HV (10^9 Btu/stream hr)	17.22	17.06	17.22	16.97
Fuel coal feed HV (10^9 Btu/stream hr)	2.62	2.46	2.62	2.37
Fuel coal feed (10^3 lb/stream hr)	304	361	310	285
Unrecovered heat (10^9 Btu/stream hr)	6.03	5.97	6.03	5.09
Heat lost to wet cooling (10^9 Btu/stream hr)	1.69	1.67	1.69	1.43

Table 2-16. Water equivalent hydrogen balance for the Synthane process using Wyodak coal.

Coal feed: 1,605,000 lb/stream hr of Wyodak seam subbituminous coal (4.3 wt. % of moisture and 4.1 wt. % of hydrogen, heating value of 10,640 Btu/lb) used for gasifiers.

Product pipeline gas: 250 x 10^6 scf/stream day with heating value of 940 Btu/scf (92.3 vol. % methane and 1.8 vol. % hydrogen).

IN	10^3 lb/stream hr
Moisture in coal fed to gasifier	69
Water equiv. of hydrogen in coal	592
Steam to gasifiers	978
Steam to shift converter	540
Makeup water to scrubber	476
	2,655

OUT	
Dirty process condensate from scrubbing and cooling	1,069
Dirty condensate from shift converter	411
Dirty condensate from purification	20
Clear condensate from methanation	142
Water equiv. of hydrogen in H_2S and NH_3	3
Water equiv. of hydrogen in product gas	921
Water equiv. of hydrogen in char and tar from gasifier	42
	2,608

Ref. 17 is not satisfactory for estimating cooling water requirements so we made our own thermal efficiency and cooling water calculations as shown in Tables 2-17 and 2-18. The thermal efficiency of 62% may be low but the unrecovered heat that is lost to wet cooling, 2.7×10^9 Btu/hr or 42% of the unrecovered heat, is certainly the maximum reasonable wet cooling load and could be lower. In the Synthane plant all the coal is fed to the gasifier and char is recovered and burnt to provide fuel for the plant. To calculate the water required for flue gas desulfurization the char production was taken to be 205.2 tons/stream hr with the composition:

C	63.64%
H	1.04%
O	1.43%
N	0.38%
S	0.26%
Ash	33.29%
HHV	9800 Btu/lb

The wet cooling load was taken to be invariant from site to site. The thermal efficiency will vary with the moisture in the coal but this will not affect the wet cooling load. The cooling water calculations were made according to Section 2.3 and entered in the summary charts.

Table 2-17. Approximate thermal efficiency for Synthane plant at Wyoming.

	10^9 Btu/stream hr
Coal feed	17.1
Gas product	9.8
Byproducts	0.8
Unrecovered	6.5
	17.1

Approximate thermal efficiency = 62%

Table 2-18. Approximate disposition of unrecovered heat in Synthane plant at Wyoming.

	10^9 Btu/stream hr		
	Direct loss	Dry cooling	Wet cooling
Coal drying	0.6		
Stack loss (10% of char burnt)	0.4		
Gasifier off-gas scrubber		1.4	
Gas purification regenerator condenser		1.3	
Lock hopper compressor			0.1
Oxygen plant compressors			1.1
Electricity (37,000 kw)			0.3
Process cooling and unaccounted			1.2
	1.1	2.7	2.7

References

1. Akhtar, S., Mazzocco, N.J., Weintraub, M. and Yavorsky, P.M., "SYNTHOIL Process for Converting Coal to Non-Polluting Fuel Oil," presented at 4th Synthetic Fuels from Coal Conference, Oklahoma State University, Stillwater, Oklahoma, May 1974.

2. Akhtar, S., Lacey, J.J., Weintraub, M., Rezik, A.A., and Yavorsky, P.M., "The SYNTHOIL Process - Material Balance and Thermal Efficiency," presented at 67th AIChE Annual Meeting, Washington, D.C., December 1974.

3. Bureau of Mines, "Economic Analysis of Synthoil Plant Producing 50,000 Barrels per day of Liquid Fuels from Two Coal Seams: Wyodak and Western Kentucky," Report No. ERDA 76-35, U.S. Dept. of the Interior, November 1975.

4. Akhtar, S., Friedman, S., and Yavorsky, P.M., "Environmental Aspects of Synthoil Process for Converting Coal to Liquid Fuels," in Second Symposium on Environmental Aspects of Fuel Conversion Technology, pp. 179-182, EPA Report No. EPA-600/2-76-149, June 1976.

5. Bureau of Mines, "An Economic Evaluation of Synthane Gasification of Pittsburgh Seam Coal at 1,000 psia Followed by Shift Conversion, Purification, Single-Stage Tube Wall Methanation and Pollution Control, Pittsburgh Seam Coal," Report No. 74-31, U.S. Dept. of Interior, June 1974.

6. McCrea, D.H., "The Benefield Activated Hot Potassium Carbonate Process: Commercial Experience Applicable to Fuel Conversion Technology," in Second Symposium on Environmental Aspects of Fuel Conversion Technology, pp. 217-223, EPA Report No. EPA-600/2-76-149, June 1976.

7. Kastenbader, P.D. and Flecksteiner, J.W., "Biological Oxidation of Coke Plant Weak Ammonia Liquor," JWPCF 41, No. 2, 199-207, 1969.

8. Gold, H., Goldstein, D.J., and Yung, D., "The Effect of Water Treatment on the Comparative Costs of Evaporative and Dry Cooled Power Plants," ERDA Report No. COO-2580-1, June 1976.

9. Goldstein, D.J. and Probstein, R.F., "Water Requirements for an Integrated SNG Plant and Mine Operation," in Second Symposium on Environmental Aspects of Fuel Conversion Technology, pp. 307-330, EPA Report No. EPA-60012/76-149, June 1976.

10. Kelly's Handbook of Crossflow Cooling Tower Performance, Neil W. Kelly & Associates, Kansas City, Missouri.

11. El Paso Natural Gas Company, "Second Supplement to Application of El Paso Natural Gas Company for a Certificate of Public Convenience and Necessity," Federal Power Commission Docket No. CP73-131, 1973.

12. Western Gasification Company, "Amended Application for Certificate of Public Convenience and Necessity," Federal Power Commission Docket No. CP73-211, 1973.

13. Wyoming Coal Gas Co. and Rochelle Coal Co., "Applicant's Environmental Assessment for a Proposed Gasification Project in Campbell and Converse Counties, Wyoming," prepared by SERNCO, October 1974.

14. North Dakota Gasification Project for ANG Coal Gasification Co., "Environmental Impact Report in Connection with Joint Application of Michigan Wisconsin Pipe Line Co. and ANG Coal Gasification Co. for a Certificate of Public Convenience and Necessity," Woodward-Clyde Consultants, Federal Power Commission Docket No. CP75-278, Vol. III, March 1975.

15. Batelle Columbus Laboratories, "Detailed Environmental Analysis Concerning a Proposed Gasification Plant for Transwestern Coal Gasification Co., Pacific Coal Gasification Co., Western Gasification Co., and the Expansion of a Strip Mine Operation Near Burnham, New Mexico Owned and Operated by Utah International Inc.," Federal Power Commission, February 1, 1973.

16. Moe, J.M., "SNG from Coal via the LURGI Gasification Process," IGT Symposium on Clean Fuels from Coal, Institute of Gas Technology, Chicago, Illinois, September 1973.

17. Bureau of Mines, "Synthane Gasification at 1000 psia, Followed by Shift Conversion, Purification, Single-Stage Tube Wall Methanation and Pollution Control. Wyodak Seam Coal," Report No. 75-15, U.S. Dept. of the Interior, November 1974.

3. SHALE CONVERSION

3.1 Underground Mining and Surface Processing

The analysis of shale conversion in the present assessment is restricted to the TOSCO II process by the program guidelines. In the TOSCO II process the oil shale is mined underground and then processed on the surface. The surface processing operation involves crushing the shale and then heating (retorting) it to produce the shale oil. The retorted shale oil is too viscous to be piped, and too high in nitrogen and sulfur to be used as normal refinery feedstock so that it must also be put through a refinery upgrading process, normally by hydrocracking. In addition, it is necessary to dispose of the spent shale from the retorting, equal to about 80 to 85 percent by weight of the originally mined shale with a volume before compaction averaging 50 percent greater than its in-place volume, and even after maximum compaction at least 12 percent greater.

The water requirements for the mining and crushing of the raw shale will be considered in Section 7 along with the same requirements for coal, since the operations are quite the same as in the underground mining of coal, and differ only in some details and in the quantities handled. Similarly the water requirements for spent shale disposal will be considered in Section 8, along with the water requirements for the solids and ash disposal in the coal conversion processes. In this same section evaporation losses, plant dust control and service and potable water needs will also be evaluated, since they too agree in kind with those for the coal conversion processes.

It will be assumed that needed auxiliary electric power will be purchased and not generated onsite. This is consistent with the TOSCO II

design in which the process steam needed in the plant is generated by burning fuel gas generated in the shale conversion.

3.2 TOSCO II Process

In the TOSCO II retorting scheme[1] shown schematically in Fig. 3-1, crushed shale of minus 1/2 inch size is preheated by pneumatically conveying the shale upward through a vertical pipe concurrently with hot flue gases from the ball heater. The flue gas is cooled during this process and the cooled gas is passed through a venturi wet scrubber to remove shale dust before venting to the atmosphere at a temperature of about 125 to 130° F.

The ball heater is a vertical furnace whose purpose is to heat up ceramic balls of about a 1/2 inch in diameter. After the balls are heated they are fed along with the preheated shale, which has been separated from the flue gas in settling chambers and cyclones, into a horizontal rotating kiln where the pressure is slightly above atmospheric. The mixture of balls and shale flows through the kiln and the shale is brought to a retorting temperature of about 900°F through conductive and radiative heat exchange with the balls. The resulting hydrocarbon and water vapors are drawn off and fractionated leaving behind a mixture of balls and processed shale.

The ceramic balls are size-separated from the spent shale, which is a fine powder, by passage through a trommel (a heavy duty rotating cylinder with many small holes punched in its shell). Warm flue gas is used to remove residual dust from the ball circulation system. The dust is removed from the flue gas with a venturi wet scrubber. The balls are then circulated back to the ball heater, by means of a bucket elevator, for reheating by burning some of the product gas.

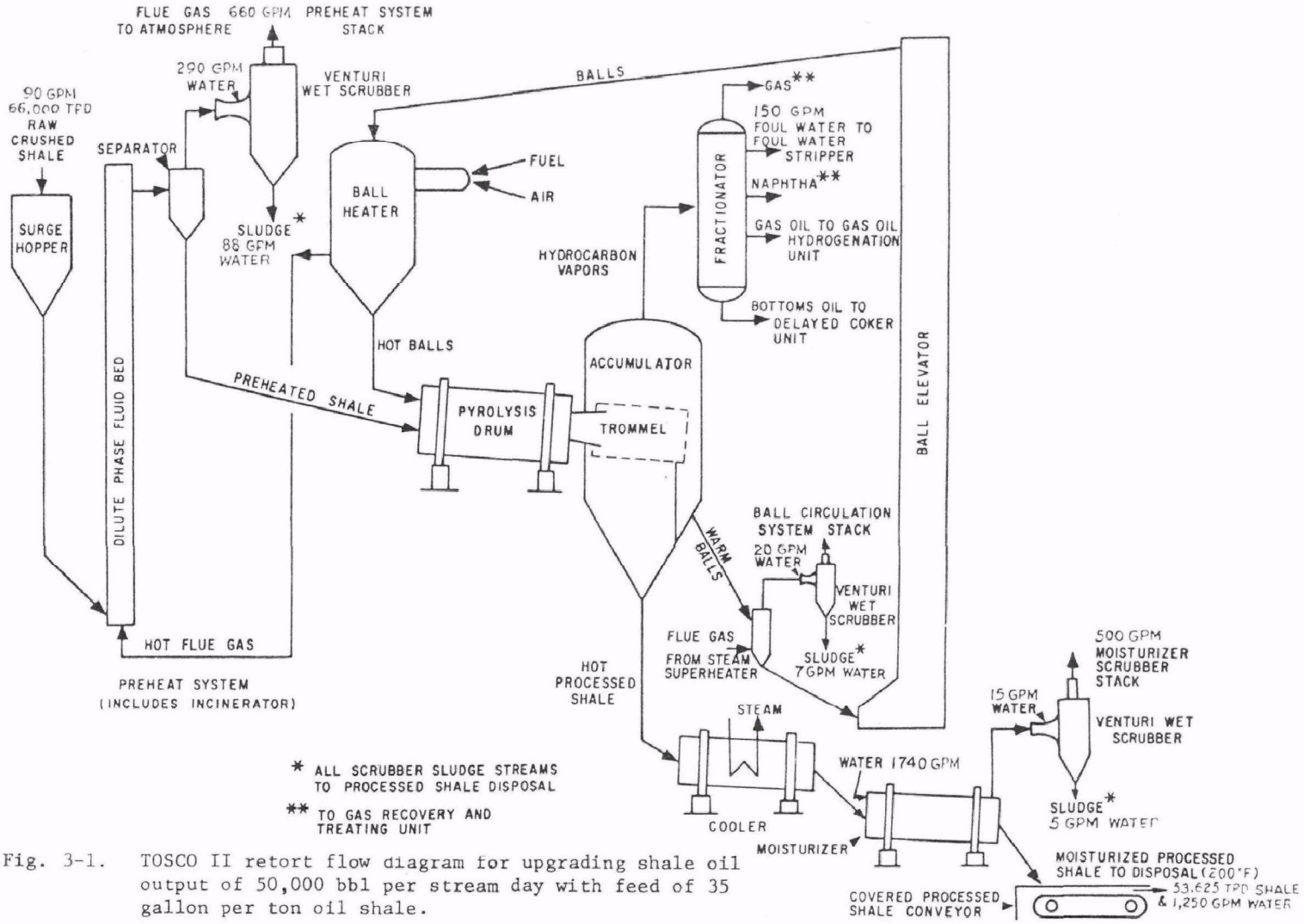

Fig. 3-1. TOSCO II retort flow diagram for upgrading shale oil output of 50,000 bbl per stream day with feed of 35 gallon per ton oil shale.

The processed shale is cooled in a rotating drum steam generator. One of the important features of the process is that the cooled spent shale is then moisturized to approximately 14 percent moisture content in a rotating drum moisturizer, after which it is transported by a conveyor belt for disposal. The steam and processed shale dust produced in the moisturizing process are passed through another venturi wet scrubber to remove the dust before discharge to the atmosphere.

The importance of the moisturizing is that addition of the water to the TOSCO type processed shale, at a predetermined shale temperature, appears to lead to cementation of the shale after proper compaction. More importantly, the cemented shale appears to "freeze" in the moisture which has been added. Samples taken from a two year old spent shale embankment at depths of four to six feet have indicated no change in moisture content from that existing at the time of compaction, which amounted to about 12 percent, 2 percent having evaporated during transportation[1]. The shale seems to become effectively impermeable and to resist percolation, so that soluble salts are not leached out[2].

In the upgrading process the gas, oil and water vapors which are drawn off are fractionated into gas, naptha, gas oil, bottoms oil, and foul water streams (see Fig. 3-2). The gas oil produced by the retorting process is a waxy oil which is high in nitrogen, contains a good deal of sulfur and is not pumpable. A clean, pumpable oil with reduced nitrogen and sulfur levels is produced by a proprietary hydrotreating process. The pour point of the bottoms oil is first reduced by delayed coking prior to hydrotreating. Most of the gas which is produced will be used as fuel for the production of process steam, although some of the

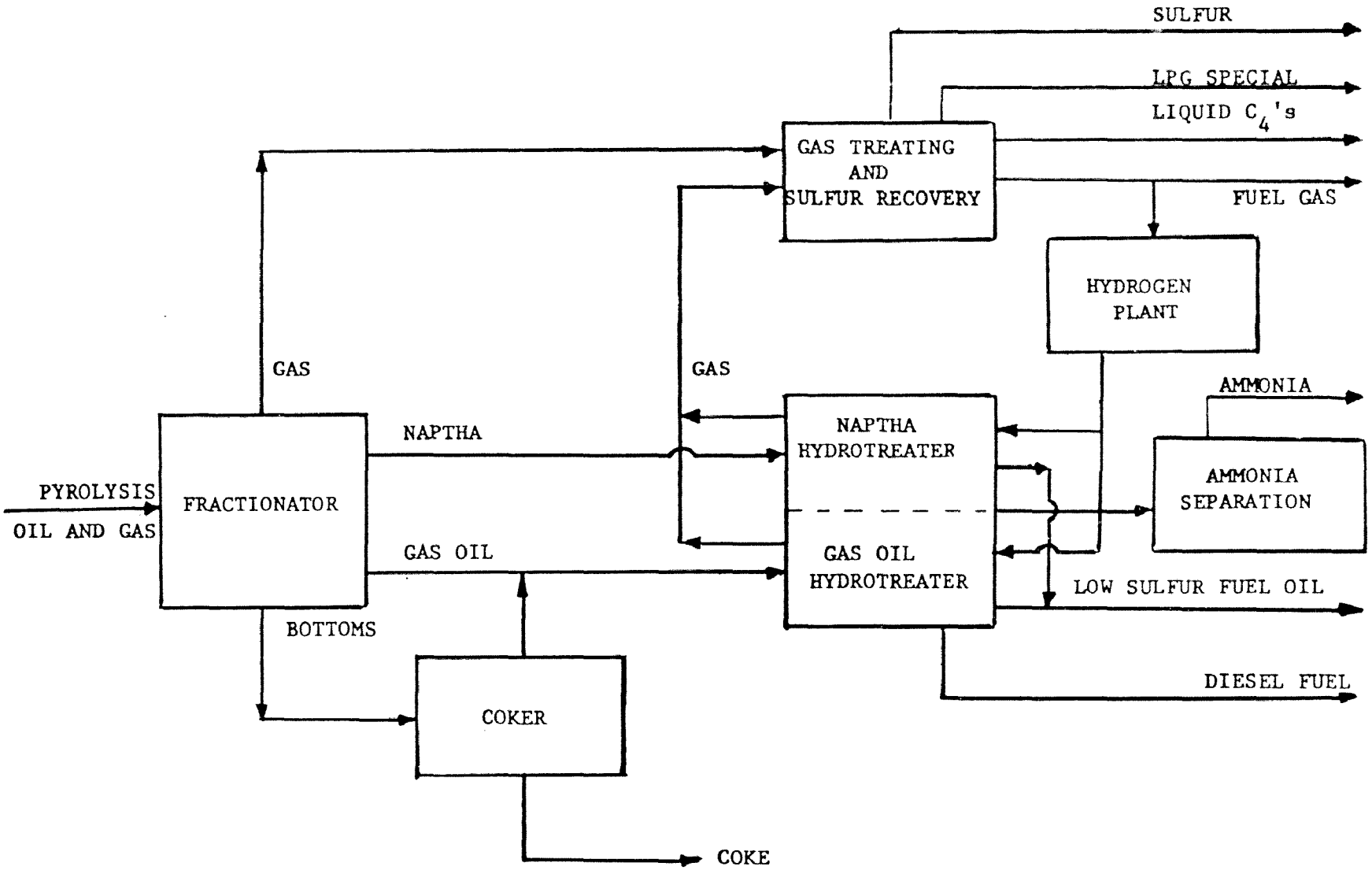

Fig. 3-2. Flow diagram for TOSCO II shale oil upgrading refinery.

higher heating value gas is used as feed material for the production of the hydrogen needed in the upgrading. Before the retort gas is burned hydrogen sulfide would be removed with subsequent sulfur recovery. Ammonia will be separated out and recovered as a liquid from the sour water produced in the hydrotreating, while the sulfur will be recovered from the hydrogen sulfide which is drawn off as a gas. The upgrading and cleaning process described for the TOSCO II refinery resembles standard refinery processing procedure.

3.3 Water Streams for Retorting

In this section, we consider the retort water streams for the specific conceptual design discussed in Ref. 1 of a plant retorting 35 gallon per ton shale with a 50,000 bbl per stream day output of upgraded shale oil. On Fig. 3-1, reproduced from Ref. 1 with some small changes, we have summarized our derived values of the water streams, with all figures in gallons per stream minute (gpm). To obtain the corresponding streams for a 100,000 bbl/day plant, it is sufficient to simply double all the input and output figures. The water quantities shown in Fig. 3-1 were derived from the water flow chart of Fig. 3-3, which was taken from Ref. 1 and to which some clarifications were added.* It is not completely straightforward to distinguish the retorting and upgrading streams in Fig. 3-3. Moreover, of particular importance in the TOSCO process is the feature noted earlier that the wastewater fed into the moisturizer which is not vaporized is sealed into the processed shale.

It can be seen from Fig. 3-3 that the only specifically noted water addition to the retorting step is the 90 gpm leaving the crusher dust suppression unit that is added to the raw shale. All of the other dust suppression

* Personal communications with TOSCO personnel.

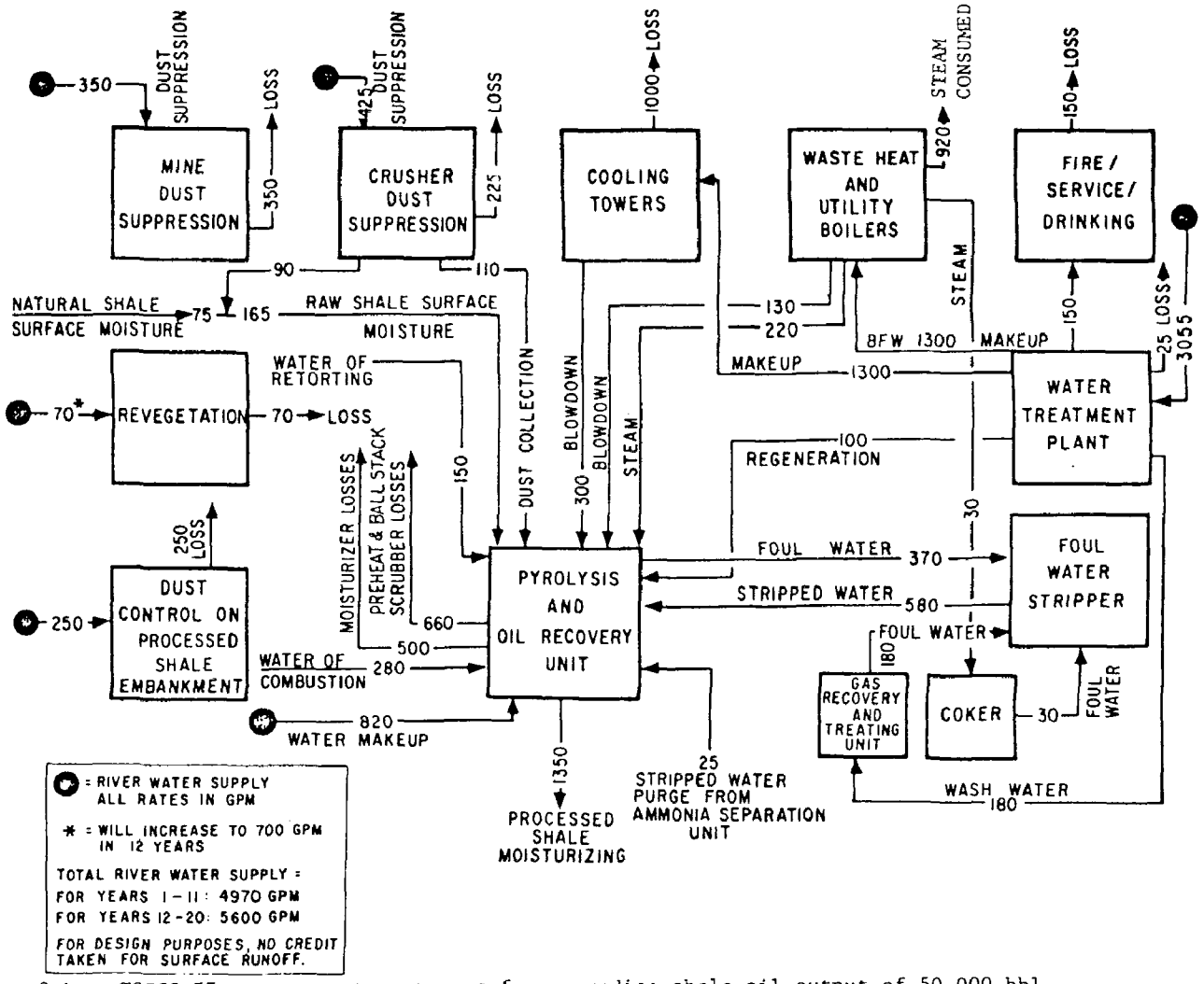

Fig. 3-3. TOSCO II process water streams for upgrading shale oil output of 50,000 bbl per stream day with feed of 35 gallon per ton oil shale[6].

water totaling 110 gpm is sent directly to the moisturizer. The only water noted to be specifically coming out of the retorting is 150 gpm listed as water of retorting,which we take to leave as foul water on the retorting diagram of Fig. 3-1. This amount of retort condensate water equals 3.27 gallons per ton of shale processed, which compares favorably with the "typical" value of 2 to 5 gallons per ton of shale given in Ref. 3.

Next we indicate how our estimates were made for the amounts of water which are put into the preheat system and ball circulation system stack gas scrubbers, along with how much water leaves in the sludge from these scrubbers. This water stream will be tabulated again in Section 8 in connection with the water leaving with the disposed solids. Together with the previous two streams we have discussed, this makes up the total imported and exported retort streams. Table 3-1 is a tabulation of the streams from Fig. 3-3 put together in a manner designed to provide estimates on the scrubber streams. The assumptions it was necessary to make along with the various dry tonnage flow rates taken from Ref. 1 are indicated directly in the table, which is reasonably self-explanatory. We emphasize that the estimates we have arrived at can be no more accurate than our interpretations of the streams given in Fig. 3-3. We note further, that some divergences do exist between the flow rates of Fig. 3-3 and those deduced from typical data provided in Ref. 1.* Therefore, we would emphasize that the figures given in Fig. 3-1 are to be treated as estimates and not precise values.

We have shown on Fig. 3-1 the stream flows we deduced that are associated with the moisturizer unit. We do not consider the water leaving with the spent shale chargeable to the retort section, but rather we treat this stream as part of the spent shale disposal system and as such we will discuss it in Section 8.

* For example, Tables 3 and 21.

Table 3-1. Determination of TOSCO II retort water streams for upgrading shale oil output of 50,000 bbl per stream day with feed of 35 gallon per ton shale, on basis of water balance for combined retorting and upgrading steps [1].

	Individual gpm	Total gpm	Makeup gpm
Water out in cumulative sludge from scrubbers		100	
Water in to processed shale moisturizing from retorting and upgrading	1,350		
Moisture out in processed shale (.14 x 53,625 tpd)	(1,250)		
	100		
Vapor out in preheat and ball circulation stacks		660	
Assumed sources of vapor in stacks:			
Water of combustion	280		
Natural shale surface moisture	75		
Moisture on shale from dust suppression	90		
Makeup water	215		
	660		
Water in to preheat and ball circulation scrubbers		310	310
Makeup water (from vapor calculation)	215		
Sludge water* ([.38/.62][925] tpd)	95		
	310		
Water in to moisturizer scrubber		15	15
Makeup water (same ratio to sludge as above)	10		
Sludge water* ([.38/.62] 43 tpd)	5		
	15		

* Total clarifier sludge equals 968 tpd (925 tpd from preheat and ball circulation scrubbers plus 43 tpd from moisturizer scrubber), while net water in the cumulative sludge equals 100 gpm or 600 tpd. Solids therefore represent 62% of sludge. Approximate split shown in Fig. 3-1 between preheat and ball circulation scrubbers is based on same relative ratios of water to dry solids.

Table 3-1 (continued)

	Individual gpm	Total gpm	Makeup gpm
Water in to moisturizer		1,740	
Moisture out in processed shale	1,250		
Water out in moisturizer scrubber sludge	5		
Vapor out in moisturizer stack	500		
Water in to moisturizer scrubber	(15)		
	1,740		
Assumed sources of water in to moisturizer:			
Cooling tower blowdown	300		
Utility boiler blowdown	130		
Regenerant wastes from deionizer	100		
Dust collection	110		
Stripped water	580		
Stripped water from ammonia unit	25		
Makeup water	495		495
	1,740		
Foul water out of pyrolysis and upgrading		370	
Water of retorting	150		
Steam used in upgrading	220		
Total assumed to leave as foul water	370		
Total water makeup from river			820

The 95 gpm of water in the effluent sludge from the preheat and ball circulation scrubbers, when added to the 150 gpm retort effluent condensate, constitutes the exported water stream. The influent streams to the scrubbers of 310 gpm plus the 90 gpm put into the raw shale feed makes up the imported stream which is seen to amount to about half of the 820 gpm makeup water.

3.4 Water Streams for Upgrading

From Fig. 3-2 it is seen that the major operations of the upgrading process are fractionation, delayed coking, hydrotreating, and gas cleanup and recovery. It is evident that the major water needs in such a system are the cooling waters required for the fractionator and coker and the water required for the production of hydrogen by steam reforming. The principal effluents will be the cooling tower and boiler blowdowns and the sour water generated in the hydrotreating and gas treating units.

In evaluating the water streams from the overall flow diagram of Fig. 3-3, the quantity most difficult to determine is the amount of steam consumed in the hydrogen plant. In Fig. 3-3, there is 920 gpm shown as steam consumed. As an upper limit we can assume that all of this amount represents steam consumption in the hydrogen plant. An alternate estimate obtained from steam usage figures* is 279,000 lb/hr or 558 gpm. Table 3-2, which is a compilation of the influent and effluent streams for the refining operation, lists both figures. We have carried out a water equivalent hydrogen balance for upgrading shale oil and find a minimum net consumption of about 40 lb H_2O/ton of shale or somewhat less than half of the lower of the two figures. This makes the 558 gpm figure the more probable value.

All of the stream quantities shown in Table 3-2 are self-explanatory and for the most part have been taken directly from Fig. 3-3. The exception is the 220 gpm of steam, which was assumed in our retort calculation to be used in the upgrading and to be converted to foul water (cf. Table 3-1). We would note here, that we have carried out an approximate overall heat balance for the TOSCO II retorting and upgrading process. The raw shale

* Fig. 38, p. 151, Ref. 1.

was taken to have a heating value of 3,070 Btu/lb[4]. The net output of materials of significant heating value not used in the 50,000 bbl/day plant was taken to be 47,000 bbl/day of fuel oil, 4,330 bbl/day of liquified petroleum gas and 800 tons/day of coke[1]. In addition, about 5% of the heating value of the shale was assumed to be unused, consistent with the amount of carbonaceous residue that remains with the spent shale in the TOSCO process.

Table 3-2. Compilation of TOSCO II refinery water streams for upgraded shale oil output of 50,000 bbl per stream day with feed of 35 gallon per ton shale, on basis of water balance for combined retorting and upgrading steps.

	gpm
Imported	
Steam used in upgrading	220
Wash water to gas treating unit	180
Steam to coker	30
Cooling tower makeup	1,300
Steam consumed in hydrogen plant	558 - 920
Total	2,288 - 2,650
Exported	
Foul water converted from steam used in upgrading	220
Foul water out of gas treating unit	180
Foul water out of coker	30
Cooling tower blowdown	300
Boiler blowdown	130
Total	860

Assuming 1,200 Btu removed per pound of water evaporated, it was found that the 1,000 gpm of water evaporated in the cooling tower corresponds to a heat loss of about 20 to 25% of the total heat dissipated in the plant. The upper limit assumes additional unaccounted losses of about 5%. This would indicate a well designed cooling system that is probably not too far off optimum.

3.5 Process and Cooling Water Consumption

From the water stream quantities detailed in the preceding two sections, the net process and cooling water consumption for the TOSCO II plants can be specified in a format consistent with that for the coal conversion processes.

The net consumption of retort water associated with a 50,000 bbl per stream day plant can be determined from Table 3-1. The retort water consumption is made up of the 215 gpm of makeup water and 90 gpm of dust suppression water leaving in the preheat and ball circulation stacks plus the net of 490 gpm leaving as vapor out the moisturizer stack. The net consumption is therefore 795 gallons per stream minute or 716 gallons per calendar minute with a 90% load factor. Although the vapor leaving in the moisturizer stack is charged to the retort, the processed shale moisture and scrubber sludge waters are charged to solids disposal and as such are considered in Section 8.

From Table 3-2 the net water consumption in the refining is seen to range between 428 and 790 gpm, after subtracting the 1,000 gpm evaporated in the cooling towers. From our discussion in Section 3.4 the lower value is the more probable one but we have taken the average of 609 gallons per stream minute to ensure the presentation of a conservative water consumption estimate. With a 90% load factor this corresponds to 548 gallons per calendar minute.

We have already discussed in Section 3.4 the evaporated cooling water rate of 1,000 gpm. We assume that this figure also includes the drift and leakage losses. For consistency with our own detailed cooling calculations the drift and leakage losses are taken at 3% of the amount evaporated. In that case, at a 90% load factor we would have a total of 900 gallons per calendar minute lost in the cooling towers with 845 gpm evaporated and 26 gpm lost to drift and leakage.

As noted earlier the corresponding water rates for a nominal 100,000 bbl/day plant are obtained by doubling the rates discussed.

References

1. Colony Development Operation, "An Environmental Impact Analysis for a Shale Oil Complex at Parachute Creek, Colorado, Part 1 - Plant Complex and Service Corridor," Atlantic Richfield Company, Denver, Colorado, 1974.

2. Metcalf & Eddy Engineers, "Water Pollution Potential from Surface Disposal of Processed Oil Shale from the TOSCO II Process," Vol. I, a report to Colony Development Operation, Atlantic Richfield Co., Operator, October 1975.

3. U.S. Department of the Interior, "Final Environmental Statement for the Prototype Oil Shale Leasing Program," Vol. I, U.S. Gov't. Printing Office, Washington, D.C., 1973.

4. Hendrickson, T.A. (editor), Synthetic Fuels Data Handbook, p. 30, Cameron Engineers, Inc., Denver, Colorado, 1975.

4. STEAM ELECTRIC GENERATION

In this section are described the methods used to determine the choice between evaporative (wet), dry or wet-dry cooling for a coal-fired steam electric generating plant at the six sites considered. The makeup water requirements and residuals generated for evaporative or wet-dry cooling towers are also specified. The consumptive water requirements (and total residuals generated) for flue gas desulfurization, mining, and evaporation, solids disposal and other uses for coal-fired steam electric generating plants are discussed in Sections 6 through 9.

At each site dry cooled steam electric generating plants with mechanical draft towers are compared to evaporative cooled plants using mechanical draft towers. Only at Navajo/Farmington, New Mexico are wet-dry mechanical draft towers compared to both dry and evaporative towers. The choice of a particular cooling system is made on an economic basis, that is, by comparing the total annual evaluated costs of dry, wet-dry and evaporative cooling systems. In the cases of wet-dry and evaporative cooling systems the cost of water has been included. The cost of water comprises the cost of supplying the makeup water, the cost of treatment of the makeup and/or the circulating water in the tower, and the cost of treatment and disposal of the blowdown in an environmentally acceptable manner.

4.1 Costs of Cooling Systems

In an evaporative cooling tower the hot water from the condenser is cooled by direct contact with air. The lowest possible temperature to which the hot water can be cooled corresponds to the wet bulb temperature of the air. This is not a practical limit since an infinitely tall cooling tower would be

required. The difference between the temperature of the water leaving the tower (or entering the condenser) and the wet bulb temperature is called the approach temperature in an evaporative cooling tower. Since most evaporative cooling towers operate over the same range the approach temperature determines the size of the tower. For a given cooling range (difference between hot water and cold water temperatures) the smaller the approach temperature the larger the tower with concomitant higher capital costs. This, and other nomenclature, is shown in Fig. 4-1.

In a dry cooling tower the initial temperature difference primarily determines the size and capital cost of the tower. The initial temperature difference is defined as the difference in temperature between the temperature of the circulating cooling water entering the tower and the entering air temperature (Fig. 4-1). The cooling range is the amount by which the circulating water is cooled as it passes through the tower and is equal to the temperature rise across the condenser. The larger the initial temperature difference, the less air-cooled area is required to reject a given amount of heat, and the less the capital cost of the cooling system. However, increasing the initial temperature difference increases the turbine exhaust pressure which results in lower efficiency and a loss of generating capacity. In dry cooling systems the cooling range is normally specified as a percentage of the initial temperature difference, and for the purposes of this study was taken to be 50 percent of the initial temperature difference. In the case of surface condensers the capital cost of the cooling system and the performance obtained with this system is also dependent on the terminal temperature difference,which is the difference between the saturation temperature corresponding to the turbine back pressure in the condenser and the circulating water

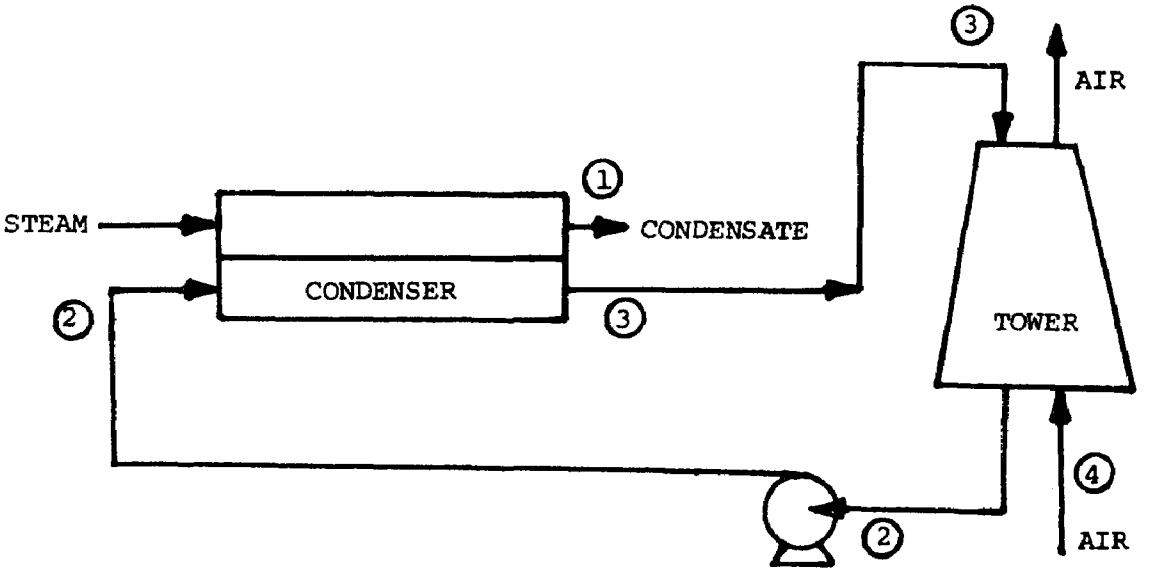

	Evaporative Cooling	Dry Cooling
Range	$T_3 - T_2$	$T_3 - T_2$
Approach	$T_2 - T_4$ (wet bulb)	--------
Initial Temperature Difference	-------	$T_3 - T_4$ (dry bulb)
Terminal Temperature Difference	T_1 (Sat.) $- T_3$	T_1 (Sat.) $- T_3$

Fig. 4-1. Cooling tower nomenclature.

leaving the condenser (Fig. 4-1). The greater the terminal temperature difference the less condenser heat transfer surface area required to reject a given amount of heat, and the lower the capital cost of the condenser.

Since the performance of a power generating plant is dependent upon the temperature of the steam condensing in the condenser, the lower the condensate temperature the higher the plant efficiency. A cooling system that is designed for a small range and a small approach for the cooling tower would be very large with concomitant higher capital costs and capital related charges and would allow the power generating plant to operate at lower turbine back pressures (lower condensing temperatures) with lower heat rates and concomitant lower fuel costs. Conversely, a cooling system designed for a large range and a large approach for the cooling tower would be relatively small with concomitant lower capital costs and lower capital related charges; however the power generating plant would have to operate at a higher turbine back pressure (higher condensing temperatures) with higher heat rates and concomitant higher fuel costs. Economic evaluations of cooling systems must therefore account for the effect of the size of the cooling tower on the efficiency of the power generating plant. Loss of plant capacity due to higher heat rates must be charged against the cooling system as a penalty cost. The economic optimum design or minimum cost operation is dependent on the climate and will vary from location to location.

Since only differences between wet and dry cooled systems are of interest here, only those costs associated with the choice and design of the cooling system are included in the analysis. The factors considered in an economic optimization procedure include the size and annual capital charges of the cooling system, annual performance of the turbine generator including loss of

generating capability at higher ambient temperatures, annual fuel costs, annual cost of auxiliaries, and annual operating and maintenance costs. These factors are discussed in detail in Refs. 1, 2, 3 and 4 and will be briefly discussed here together with the input pricing data used for the numerical calculations.

In order to make a direct comparison it was assumed that the dry cooled plant produced the same nominal generating output as the evaporative cooled plant with which it was compared. At all sites but Rifle, Colorado, it was assumed that a nominal 3000 MWe was generated; at Rifle, Colorado, a nominal 1000 MWe was assumed to be generated. It was further assumed that the turbines operated at a constant throttle "full-load" condition during all hours of operation except when the turbine generator was throttled back to a part-load condition to avoid exceeding the specified turbine back pressure limit. The load factor was taken to be 70 percent. The total annual hours of operation was 6132 based on full operation during each month except for the month of March, when the plant was completely shut down for maintenance, and the month of April, when the plant was partially shut down for maintenance. Energy was credited as an excess, or penalized as a deficit, if the plant produced more or less energy than the nominal generating output.

Capital cost of cooling system. The capital cost includes the capital expenditure for installation and materials necessary to construct the cooling system. The major components of the cooling system include the condensers, the cooling tower (evaporative, dry or wet-dry) and associated equipment, and circulating water facilities including piping, valves, pumps, pump drives and storage tanks. For dry cooling systems, additional capital costs are also included. These are associated with a supplemental mechanical-draft evaporative

cooling system used for auxiliary cooling, the added cost of a turbine generator suitable for operation at high exhaust pressures, and the additional steam supply required by the high exhaust pressure turbine in order to produce its rated output.

The small supplemental mechanical draft evaporative cooling system is used to supply cooling water for the plant auxiliary equipment during hot weather when the temperature of the cooling water leaving the dry tower exceeds $95^{o}F$, the present standard temperature for auxiliary cooling water. The supplemental evaporative cooling system was designed with a heat rejection capacity of 1.3% of the condenser heat load. The heat rejection capacity of the supplemental cooling system is 195×10^{6} Btu/stream-hr for the 3000 MWe plants, and 65×10^{6} Btu/stream-hr for the 1000 MWe plant. The total evaporative water loss for the supplemental cooling system was calculated to be not more than 70×10^{6} gallons per year. This is to be compared to an evaporative water loss of 7.0 to 7.8×10^{9} gallons per year from an all evaporative cooling system for a 3000 MWe fossil fuel generating plant (see Table 4-6). This corresponds to a supplemental cooling system requirement for the dry cooling system of not more than one percent of the 3000 MWe wet cooling system evaporation loss. Although the capital cost of the supplementary evaporative cooling system as well as the power costs were included in the capital and annual evaluated costs of the dry cooling system the costs of water supply, treatment, and blowdown disposal for the supplemental tower were not included in the total annual evaluated costs of the dry cooling system. These water costs have been assumed to be negligible.

Dry cooling tower costs are based on the latest pricing information furnished by Hudson Products Corporation for their "Power Tower" module and are an update of the pricing data incorporated in the computer program described in Ref. 3. Capital costs and fan power requirements for the evaporative cooling system are based on the results presented in Ref. 4. The costs presented in Ref. 4 for the so-called "Middletown" site are January 1, 1973 national average costs and have, in the present study, been escalated to mid-1975, in accordance with the Handy-Whitman Index for miscellaneous power plant equipment, to correspond to the Hudson dry cooling tower cost data. Pricing data for other components of the evaporative and dry cooling systems are described in Ref. 1. The condenser tubes for both the dry and evaporative cooling systems are made either of corrosion-resistant Admiralty brass with an outside diameter of 1.0 inch and a wall thickness of 18 BWG, or of stainless steel,at the same cost. Single pressure operation was assumed for the surface condensers. All costs are based on 1975 dollars. Construction was assumed to be initiated in early 1975 with start-up of the cooling tower scheduled by the end of 1977.

Annual capital cost: An annual fixed charge rate is applied to the capital cost of the cooling system to determine the annual cost of interest, amortization and other charges incidental to the acquisition and use of the initial capital expense. An annual fixed charge rate of 15 percent was used in the present study.

Annual cost of operation and maintenance: This is the cost of operating and maintaining the cooling system and is figured as a percentage of the capital

cost of the cooling system. In the present study, annual operating and maintenance costs were taken to be one percent of the capital cost of the cooling system.

Annual credit for excess power generation: As noted above the annual operating profile assumed 6132 hours of operation per year at constant throttle full-load conditions except when the turbine-generator was throttled back to a part-load condition to avoid exceeding the specified back pressure limit of the unit. At some ambient temperature conditions the cooling system may operate at a lower turbine exhaust pressure and generate a greater output than the nominal generating output of 1000 MWe or 3000 MWe. The annual credit for excess power generation is the product of the average fuel cost per kwh and the excess energy generated. The unit cost of fossil fuel was taken to be \$0.50 per 10^6 Btu; with an assumed heat rate of 10,000 Btu/kwh for the conventional turbine generator, the fuel cost is 5 mills/kwh[5].

Annual cost of replacement energy: For each cooling system sufficient peaking capacity must be installed to make up the difference in generator energy output between the unit and the nominal output when the nominal output is not obtained. It is assumed that the nominal capacity need not be met for the ten highest temperature hours of the year. The cutoff temperature for peaking generation was taken to be $82^{o}F$ ($27.8^{o}C$); above this temperature replacement energy is assumed to come from installed gas turbine units at a fuel cost of 35 mills/kwh and below this temperature replacement energy is assumed to be provided by excess capability available elsewhere on the utility system at a fuel cost of 6 mills/kwh. The capital cost of replacement capacity was assumed to be \$175/kw based upon the maximum kw; the annual replacement capacity cost is calculated on the basis of an annual fixed charge of 15 percent.

Annual cost of auxiliary power: This is the cost of the power necessary to run the cooling system. The auxiliary power consists of the fan power necessary to maintain air circulation through the cooling tower, and the pumping power necessary to maintain water circulation through the cooling system. The energy cost for the auxiliaries is based on the fuel cost for the plant, and, as noted above, is taken to be 5 mills/kwh for a conventional turbine generator, with an allowance of 0.2 mills/kwh for operation and maintenance. The incremental cost of sufficient additional plant capacity to provide the auxiliary power required is assumed to be $400/kw based on the maximum auxiliary power; the annual cost of auxiliary power is calculated on the basis of an annual fixed charge of 15 percent.

Annual fuel cost: As noted previously the unit cost of fuel is $0.50 per 10^6 Btu; with an assumed heat rate of 10,000 Btu/kwh for the conventional turbine generator the fuel cost is 5 mills/kwh[5].

A summary of the unit price data is found in Table 4-1.

4.2 Comparison of Dry and Evaporative Cooling Systems Not Including the Costs of Water

Two comprehensive computer programs developed at R. W. Beck and Associates were used to facilitate the optimization analyses of the dry and evaporative cooling systems. The general elements of the computer program for the dry cooling system are described in Ref. 1; a detailed updated version of this program is described in Ref. 3. The description of the computer program developed by R. W. Beck and Associates for the evaporative cooling system has not been published in the literature. Comparable input pricing data was used for each computer program in order to obtain a meaningful comparison between the dry and evaporative cooling systems at each site.

Table 4-1. Summary of unit price data.

Annual Fixed Charge Rate (percent)	15
Unit Fuel Cost ($/$10^6$ Btu)	0.50
Replacement Capacity Charge Above 82°F ($/maximum kw)	175
Replacement Capacity Charge Below 82°F ($/maximum kw)	0
Replacement Energy Cost At and Above 82°F (mills/kwh)	35
Replacement Energy Cost Below 82°F (mills/kwh)	6
Auxiliary Power Capital Cost ($/maximum kw)	400
Auxiliary Energy Cost	*
Interest During Construction (percent)	8
Construction Period (years)	2
Scheduled Start-up (year)	1977

* Based on average fuel cost plus operation and maintenance. O&M is 4% of average fuel cost.

The meterological data at five of the six sites were obtained from either the Decennial Census of United States Climate (Summary of Hourly Observations) or from the National Climatic Center of the National Oceanic and Atmospheric Administration, Asheville, North Carolina. This data consists of 10-year average data of the mean annual dry-bulb temperature over the range of relative humidities and the frequency of occurrence at five degree intervals of dry-bulb and wet-bulb temperatures. Meterological data for Kaiparowits/Escalante, Utah were based upon data gathered from Southern California Edison Company at Nipple Beach, a plateau located in Kane County, Utah, near the site of the proposed plants. This data was collected over a three year period from November 1971 to February 1975.

At each site the dry cooling systems were optimized and evaluated with high back pressure turbine-generators, that is, turbines limited to 15.0 inches Hg absolute exhaust pressure, as well as turbine generators of conventional design, that is turbines limited to 5.0 in Hg absolute. Dry cooling systems with high back pressure turbine-generators are generally smaller in size, with concomitant smaller capital costs than those utilizing conventional turbine generators; however, they are not as thermally efficient and result in higher fuel costs. The evaporative cooling systems were optimized and evaluated with turbines of conventional design. The results that are presented in this section for the evaporative cooling system do not include the costs of water. The water costs will be detailed in Section 4.3.

Figure 4-2 presents the annual evaluated costs for the dry cooling system with high back pressure turbine-generators as well as turbine-generators of conventional design at Navajo/Farmington, New Mexico as a function of the initial temperature difference. Similar results have been obtained at the

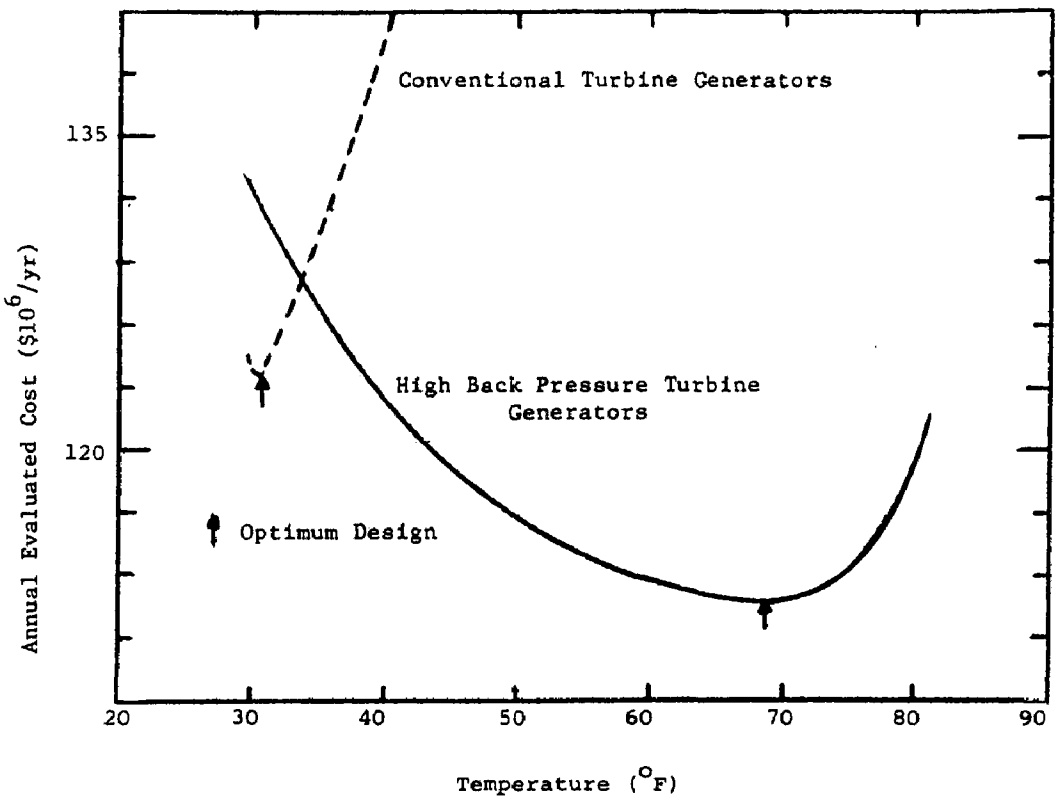

Fig. 4-2. Annual evaluated cost of dry cooling system as a function of the initial temperature difference for Navajo/Farmington, New Mexico.

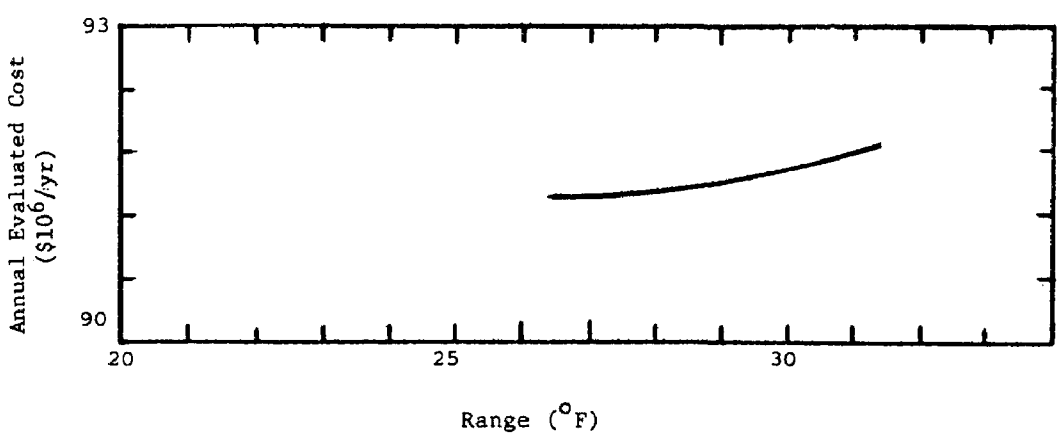

Fig. 4-3. Annual evaluated cost of evaporative cooling system as a function of cooling range for Navajo/Farmington, New Mexico.

other five sites. The total annual evaluated cost of the cooling system is the algebraic sum of the annual capital cost, the annual cost of operation and maintenance, the annual cost of replacement energy and capacity, the annual cost of auxiliary power and the annual fuel cost, with credit given for excess power generation. The optimum design corresponds to the minimum annual evaluated cost. As expected, with the relatively low fossil fuel costs the dry cooling system evaluated better with the high back pressure turbine-generators in all cases.

The annual evaluated costs for evaporative cooling systems are presented in Figure 4-3 as a function of the cooling range for a turbine-generator of conventional design for the Navajo/Farmington, New Mexico site. The curve has already been optimized relative to the approach temperature. For a given design back pressure the lowest cooling range considered generally resulted in the lowest annual evaluated cost. The curves are essentially flat at the minimum range and therefore this condition can reasonably be accepted as the optimum design condition. Similar results were obtained at the other five sites.

The optimized results for the Navajo/Farmington, New Mexico site are given in Tables 4-2 through 4-4. Table 4-2 presents a summary of design conditions for the optimized dry and evaporative cooling systems. Table 4-3 gives a summary of the capital costs for the optimized cooling systems while a summary of the energy and power quantities are given in Table 4-4. It has been assumed that the overall thermal efficiency of the power plant with conventional turbines is 35 percent with approximately 48 percent of the heat dissipated to either the wet tower or the dry tower. Of the 17 percent remaining heat,

Table 4-2. Summary of design conditions for optimized cooling systems at Navajo/Farmington, New Mexico.

	Dry Cooling Conventional Turbine	Dry Cooling High Back Pressure Turbine	Evaporative Cooling
Average Annual Dry-Bulb Temperature, °F	51	51	51
Average Annual Wet-Bulb Temperature, °F			40
Design Wet-Bulb Temperature, °F			64
Ambient Temperature for Determination of Peaking Capacity Requirement, °F	97	97	
Initial Temperature Difference, °F	31	67	
Design Cooling Range, °F	15.5	33.5	26.4
Design Approach Temperature, °F			28.0
Design Terminal Temperature Difference, °F	6.0	5.0	7.0
Design Inlet Temperature, °F	79.6	85.0	92.0
Turbine Exhaust Pressure, in Hga	2.0	3.8	3.5
Total Tower Heat Load, 10^6 Btu/stream hr	13939.8	15637.2	14166.0
Condenser Duty, 10^6 Btu/stream hr	13761.0	15438.3	13983.0
Circulating Water Flow, 10^3 gallons per stream min.	1782	912	1072
Condenser			
Surface Area, 10^3 sq.ft.	1653	1357	1314
Number of Tubes, 10^3	129	136	156
Tube length, ft.	49	38	32
Velocity through tubes, ft/sec.	6.95	6.73	6.81

Table 4-3. Summary of capital costs for optimized cooling systems (10^6 Dollars) at Navajo/Farmington, New Mexico.

	Dry Cooling Conventional Turbine	Dry Cooling High Back Pressure Turbine	Evaporative Cooling
Cooling Tower	142.466	75.979	11.911
Circulating Water Facilities	14.418	7.237	7.492
Electrical			2.477
Condenser	16.774	12.125	11.824
Suplemental Evaporative Cooling System for Auxiliary Cooling	.751	.751	
Interest During Construction	27.141	14.967	4.968
Additional System Supply Required by High Exhaust Pressure Turbine		8.094	
Total Cooling System Erected Capital Cost	201.550	119.153	38.672
Incremental Plant Capacity to Provide Auxiliary Power	37.533	20.363	7.703
Replacement Capacity for Peaking	15.192	16.867	6.750
Total Capital Investment	254.275	156.383	53.125

Table 4-4. Summary of energy and power quantities for optimized cooling systems at Navajo/Farmington, New Mexico.

	Dry Cooling Conventional Turbine	Dry Cooling High Back Pressure Turbine	Evaporative Cooling
Gross Annual Energy Generation of Plant, Mwh	18,602,334	18,631,773	18,414,933
Excess Energy Generation, Mwh	215,790	255,096	47,403
Replacement Energy			
Above 82°F, Mwh	9,765	19,629	10,872
Below 82°F, Mwh	0	0	12,840
Maximum Replacement Capacity			
Above 82°F, kw	78,870	104,445	38,571
Below 82°F, kw	-7,980	6,939	13,674
Auxiliary Energy, Mwh	441,825	306,339	118,080
Maximum Auxiliary Power, kw	103,491	55,506	19,257

approximately 10 percent is dissipated through the stack gases, 3 percent to reheat the fuel gas after desulfurization, and approximately 4 percent is dissipated through in-plant losses.

A breakdown of the annual evaluated costs for the optimized cooling systems are presented in Table 4-5 for Navajo/Farmington, New Mexico. The principal cost difference between the three systems considered is due to the size or capital cost of the cooling tower, followed by the difference in the cost of the auxiliary power and energy. The annual plant fuel cost is substantially higher for the dry cooling system with the high back pressure turbine generator as compared to the other two systems. These trends were found for the five other sites studied.

Table 4-6 compares the total evaluated costs of the optimum dry cooling system with high back pressure and conventional turbines, with those of the optimum evaporative cooling system at each of the sites. It is to be emphasized that the cost of water is not included in the evaporative cooling costs. The difference in the annual evaluated cost between the optimum dry cooling system and the optimum evaporative cooling system is also shown in the table. As noted previously the difference is due primarily to the difference between the annual capital costs of the two systems. The break-even water costs, expressed as $/1000 gallons of evaporated water, are also shown in Table 4-4. This quantity is the ratio of the difference in the total evaluated costs between the optimum dry and evaporative cooling system to the total quantity of water evaporated in a year from the evaporative cooling tower. The breakeven water cost represents the total cost of water for which the total annual cost of an evaporative cooling system (including the costs of water) is equal to the total annual cost of a dry cooling system.

Table 4-5. Breakdown of Annual Evaluated Costs for Optimized Cooling System at Navajo/Farmington, New Mexico (10^6 dollars/yr).

	Dry Cooling		
	Conventional Turbine	High Back Pressure Turbine	Evaporative Cooling
Annual Capital and Operation and Maintenance Cost of Cooling System	31.664	18.163	6.187
Annual Plant Fuel Cost	82.239	88.081	82.218
Credit for Excess Generation	-0.952	-1.202	-0.210
Annual Replacement Capacity and Energy Cost	2.412	3.429	1.470
Annual Auxiliary Power and Energy Cost	8.250	4.840	1.706
Total Annual Evaluated Cost	123.613	113.311	91.371

Table 4-6. Comparison of total annual evaluated costs of optimized cooling systems and breakeven water costs.

SITE	Total Annual Evaluated Costs (10^6 dollars/yr)			Total Water Evaporated (10^6 gallons/yr)	Breakeven Water Costs ($/1000 gallons of evaporated water)
	Dry Cooling	Evaporative Cooling Without Costs of Water	Difference		
	Conventional Turbines				
COLSTRIP, MONTANA	123.204	91.122	32.082	7377	4.35
BEULAH, NORTH DAKOTA	124.605	91.554	33.051	7023	4.71
GILLETTE, WYOMING	128.010	90.426	37.584	7398	5.08
RIFLE, COLORADO*	43.451	30.482	12.969	2567	5.05
NAVAJO/FARMINGTON, NEW MEXICO	123.612	91.371	32.241	7686	4.19
KAIPAROWITS/ESCALANTE UTAH	127.971	92.001	35.970	7764	4.63
	High Back Pressure Turbines				
COLSTRIP, MONTANA	112.467	91.122	21.345	7377	2.89
BEULAH, NORTH DAKOTA	112.362	91.554	20.808	7023	2.96
GILLETTE, WYOMING	112.140	90.426	21.714	7398	2.94
RIFLE, COLORADO*	38.284	30.482	7.802	2567	3.04
NAVAJO/FARMINGTON, NEW MEXICO	113.310	91.371	21.939	7686	2.85
KAIPAROWITS/ESCALANTE UTAH	114.753	92.001	22.752	7764	2.93

* 1000 MWe; all others 3000 MWe.

If the actual water cost does not exceed the breakeven water costs, an evaporative cooling system would be selected; if the actual cost of water exceeds the breakeven water cost, dry cooling would be selected.

4.3 Costs of Water

The cost of water comprises the cost of supplying the makeup water, the cost of treatment of the makeup and/or the circulating water in the tower, and the cost of treatment and disposal of the blowdown in an environmentally acceptable manner. In this section the water treatment methods used to control the circulating water concentration and the blowdown treatment and disposal methods used to meet the disposal regulations are briefly delineated together with their costs. Water supply costs are also discussed. A more extensive discussion is found in Reference 6.

Circulating Cooling Water Treatment and Blowdown Disposal

The treatment of circulating cooling water is intended to prevent the problems of scaling, fouling, microbial growth and corrosion. Salts dissolved in the makeup water to the cooling tower are concentrated often to the point of precipitation because of the large evaporative losses. The precipitate, which usually consists of carbonates, sulfates and phosphates of calcium and magnesium together with silica, tends to adhere to heat transfer surfaces forming a hard scale and lowering the heat transfer coefficient. This must be prevented by limiting the concentration of the calcium, magnesium and silica salts.

Suspended matter in the circulating water settles out in stagnant spots in the pipes and heat exchangers. The circulating cooling water contains an ever increasing amount of suspended matter in the form of silt in the

makeup water and in the form of dust scrubbed out of the air by the circulating water in its passage through the tower. The suspended matter must continuously be removed from the circulating cooling water.

Circulating cooling water is warm and well oxygenated and receives a steady supply of oxygen for air-borne growth. Untreated cooling systems are subject to fungal rot of the wooden parts of the tower, bacterial corrosion of iron and bacterial production of sulfide, and large growths of algae in the sunlit portions of the tower. Biocidal chemicals must be added to control growth.

The control of corrosion with chemicals has not been considered since the condenser heat transfer surfaces are made of copper alloys or stainless steel which minimizes corrosion. However chlorides have been limited to 3000 mg/l to prevent corrosion on stainless steel. This does not apply if copper-alloy condensers are used. This limitation on chloride also restricts the drift salt concentration and minimizes damage to local vegetation and groundwater supplies.

Table 4-7 lists the control limits for cooling tower circulating cooling water used in this study.

In a recent study[6] general methods of treatment of the makeup and circulating cooling waters to prevent scaling, fouling and microbial growth have been presented together with their costs. Emphasis was placed on finding water treatment disposal systems which minimize the total evaluated cost. The results have shown that the total evaluated cost is minimized by evaporating the highest possible fraction of the makeup water. Higher concentrations increase the cost of treatment of the circulating cooling water but this is more than off-set by the reduced cost of supplying the makeup

Table 4-7. Control limits for cooling tower circulating water composition.

	Conventional at low pH*	Suggested at high pH with high concentration and dispersants*	Used in this study
pH	6.5 to 7.5	7.5 to 8.5	
Suspended Solids (mg/l)	200 - 400	300 - 400	300
Ca x CO_3 (as $CaCO_3$)	1,200	6,000**	6,000
Carbonates (mg/l)	5	5	5
Bicarbonates (mg/l)	50 - 150	300 - 400	300
Silica (mg/l)	150	150 - 200	150
Mg x SiO_2 (mg/l)	35,000	60,000	60,000
Ca x SO_4 (as $CaCO_3$)	1.5×10^6 to 2.5×10^6	2.5×10^6 to 8×10^6	2.5×10^6
Chlorides	----	----	3,000

* From Ref. 7.
** More data needed to confirm (footnote from Ref. 7).

water and disposing of the solid residuals in an environmentally acceptable manner. Four sites were studied to illustrate minimum water consumption and minimum cost treatment and disposal systems. The results of Ref. 6 have been extended to the six sites considered in the present study. These results are presented below.

One of the major limiting factors requiring treatment is the dust that is scrubbed out of the air in the cooling tower and concentrated in the circulating cooling water. Treatment of the makeup water does not affect this limit and it is for this reason that the makeup water, as distinct from the sidestream of the circulating water, has not been treated. The dust scrubbed out of the air has been estimated by a technique described in Ref. 7. The dust flow is calculated to be 38 lb/min; about 20 percent of the dust is suspended in the water with the rest settling in the basin or not being trapped. The resultant input dust rate is 7.6 lb/min. With this input dust rate and a suspended solids limitation of 300 mg/l the control of suspended solids only by blowdown would mean a blowdown rate of about 6000 gpm (for an evaporation rate of 20,000 gpm) and a maximum concentration of 4.3 cycles. Sidestream separation of suspended solids has been used in every case. Clarifiers have been used with the overflow from the clarifier assumed reduced to 100 mg/l suspended solids. The underflow of a clarifier that is used exclusively for dust and dirt removal is assumed to be 1% suspended solids with an underflow rate not larger than 2% of the feed rate. (Larger underflow rates reduce the concentration). When lime precipitation also occurs the suspended solids concentration in the underflow can be higher than 1%.

Synthetic flocculants are added to the clarifier feed at a rate of 1 mg/l at a cost of $1.60/lb. When lime is not added alum is added at a rate of 20 mg/l at a cost of 5.3¢/lb.

In some designs a clarifier effluent concentration of 100 mg/l suspended solids is not good enough and a filter has been added. The supplied costs of automatic backflushed gravity sand filters is approximately $150/ft^2 at a flow rate of 2 gpm/ft^2 for a cost of $75/gpm.

Synthetic polymeric dispersant chemicals (antifoulants) are added to the circulating water at a cost of 3¢/1000 gallons of sidestream flow.

The usual way to prevent scaling when high cycles of concentration are used is to remove calcium, magnesium, bicarbonate, phosphate and silica. When the four ions and silica are removed calcium sulfate or the chloride ion will usually be what limits further concentration. A common procedure used to remove the calcium and magnesium ions is to precipitate with lime and soda ash. This lime-soda softening procedure was used to treat the sidestream flows at all of the sites considered. The quantities of lime and soda ash required are estimated from well known relations[8], and will not be repeated here.

Silica is precipitated with magnesium hydroxide at a rate of about 1 gm SiO_2 per 7 grams Mg^{++}[9,10] If more silica removal is required then magnesium will have to be added. The ability to remove silica with magnesium at a cooling water temperature of 80°F or more is illustrated in Ref. 11 (p. 84). At Navajo/Farmington, New Mexico; Gillette, Wyoming; and Kaiparowits/Escalante, Utah, dolomite was added to the clarifier to precipitate silica.

When the pH is raised to about 11 phosphate removal is quite complete, requiring a consumption of 5 moles of lime for 3 moles of P[10] Calculation of the lime requirements must include the lime needed to raise the pH.

Lime-soda softening involves a small investment in chemical feeders and mixers and a large investment in clarifiers to settle out the precipitates. Installed clarifier costs have been estimated using the cheaper of steel or concrete tanks. The concrete cost was taken to be $175/cubic yard and includes excavation, backfill, concrete, concrete forms, rebar and finish. Steel tank costs depend upon the diameter of the tank. Clarifiers were sized separately for each site study and depending on the particular conditions linear velocities in the range of 0.4 to 1.3 gpm/ft^2 were chosen. A rule of installing two parallel clarifiers each having 65 percent of the required capacity was adopted.

Microbial growth was prevented by the addition of microbiocides to the circulating water. The costs of biocides having EPA, USDA and similar approvals as non-dangerous materials lie in the broad range of 15¢ to $1.50 per thousand gallons of blowdown. The major mechanism of loss of biocide is in blowdown. An average cost of 50¢/1000 gallons of blowdown was used in this study.

The cycles of concentration in all cases but Kaiparowits/Escalante, Utah was controlled by the minimum underflow for the clarifier. The cycles of concentration were 53. At Kaiparowits/Escalante, Utah, chloride limited the cycles of concentration to 30. The use of the term "cycles of concentration" refers to soluble materials only since the insoluble materials are removed in sidestream treatment. The blowdown rate is determined by dividing the makeup flow rate by the cycles of concentration.

The underflow from the clarifier in the cooling tower is thickened in the flue gas desulfurization water loop (Section 6). The cooling tower blowdown is thickened to a 40% dry solids - 60% water slurry. The weight of the solids

in the cooling tower blowdown is at most 20% of the weight of the dry solids in the flue gas desulfurization slurry, well within the reserve capacity of the desulfurization thickener clarifiers. As a result the costs associated with thickening the cooling tower blowdown are relatively small. The thickened slurry is disposed of on-site by ponding or as land fill.

Table 4-8 shows the flow diagram, circulating cooling water concentration and cost estimates for the Navajo/Farmington, New Mexico site. The makeup water composition for all the sites is found in Appendix B. Table 4-9 summarizes the annual evaluated costs of water treatment and blowdown disposal at each of the six sites. The costs range between $0.17 to $0.31 per 1000 gallons of water evaporated.

Water Supply

Water must be bought and brought to the plant. For the purposes of this study the cost of the water rights were assumed to be zero.

In studying pipelines, data have been obtained from two sources. Stone and Webster Engineering Corporation has recently estimated costs for a 12 inch diameter pipeline in the Wyodak, Wyoming area[12]. The line was designed for a water flow of 2,200 gpm and runs for about 3.8 miles. The total cost was estimated to be approximately one million dollars and includes the cost of pipe metal, labor for installing, excavating and backfill. Extra costs for going under or over roads, railroads, rivers, or bridges are not included. The cost represents about $33,000/(inch diam-mile).

Data from a Bureau of Reclamation study[13] of buried aqueducts showed that the average costs vary from $21,000/(inch diam-mile) for pipelines to 84 inches in diameter to $32,000/(inch diam-mile) for diameters greater than 84 inches. For the present study an installed cost of $25,000/(inch diam-mile)

Table 4-8. Flow diagram, circulating water concentration and estimated costs for Navajo/Farmington, New Mexico cooling tower.

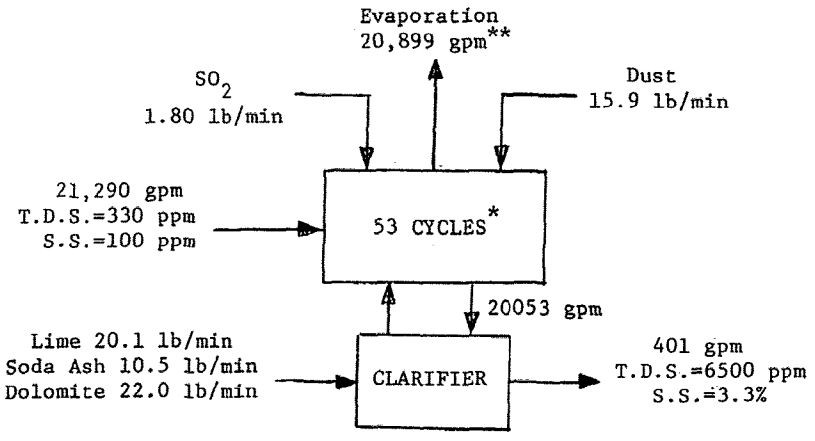

* Without additional thickening of clarifier underflow.

** All flow rates are expressed in gallons per stream minute.

Concentration of Circulating Water

(in mg/l as $CaCO_3$)

Ca^{+2}	115	CO_3^{-2}	-
Mg^{+2}	39	HCO_3^{-}	124
Na^{+}	6572	SO_4^{-2}	6254
Cl^{-}	636	SiO_2	13 mg/l (as SiO_2)

Costs

Capital Costs ($1000)		
2 Lime and Dust Clarifiers (approx. 169 ft. dia. each)		1140
Evaluated Costs ($1000/yr)		
15% of Capital		173
Chemicals		
Lime	228	
Soda Ash	177	
Dolomite	185	
Flocculant	113	
Dispersant	252	
Biocide	84	
Sulphuric Acid (pH control)	1	
Total Chemicals		1040
Labor		300
Blowdown Disposal		6
TOTAL EVALUATED COSTS		1340

Table 4-9. Summary of annual evaluated costs of water treatment and blowdown disposal.

SITE	Water Treatment		Blowdown Disposal ($1000/yr)	Total ($1000/yr)	Total Costs ($/1000 gallons of water evaporated)
	Capital ($1000/yr)	Chemicals, and Labor ($1000/yr)			
COLSTRIP, MONTANA	169	1060	6	1235	0.17
BEULAH, NORTH DAKOTA	165	1390	6	1561	0.22
GILLETTE, WYOMING	169	1280	6	1455	0.20
RIFLE, COLORADO	112	468	2	582	0.23
NAVAJO/FARMINGTON, NEW MEXICO	173	1340	6	1519	0.20
KAIPAROWITS/ESCALANTE, UTAH	174	2215	10	2399	0.31

and annual charges of 10% per year were assumed. Furthermore we have assumed pumping energy costs of 10 mills/kw-hr (1¢/kw-hr), as compared to the cooling tower auxiliary costs of 5.2 mills/kw-hr. It can be shown that there is an optimum flow rate which minimizes the total evaluated cost of supplying water to the plant. For the particular conditions cited the optimum flow rate is 9.65 ft/sec.

At some of the sites the pipeline supplied not only the water for the steam electric power plant but also supplied the water for some of the other coal conversion plants. Table 4-10 lists the other plants supplied by the same pipeline that supplied the steam electric power plant. The table also lists the length of pipeline required at each site, L, together with the difference in elevation, H, between the power plant site and the water source. Note that two power plants are sited at Kaiparowits/Escalante, Utah, and a different pipeline supplies water for each plant. The diameter of pipe, D, required at each of the sites assuming peak flow rates is also shown. The peak flow rates are based on the water consumption data presented in the summary tables of Section 10 and the appropriate load factor. Table 4-11 shows the total annual evaluated costs of installing the pipeline and the annual pumping energy costs. The total annual evaluated cost of supplying water to the power plant is given in column 4 and is obtained by multiplying the total evaluated cost of the pipeline by the fraction of water that is used by the power plant. For example, at Colstrip, Montana, the total water consumed by the power plant is 16,500 gallons per calendar minute while the water consumed by the Synthane plant is 4,800 gallons per calendar minute. The cost of supplying water to the power plant is

$$\frac{16,500}{16,500 + 4,800} \times \$4.02 \times 10^6/\text{yr} = \$3.11 \times 10^6/\text{yr} .$$

Table 4-10. Pipeline data.

SITE	Plants Supplied by Pipeline	L (miles)	H (ft)	D (ft)
COLSTRIP, MONTANA	3000 MWe Power Plant 250 x 10^6 scf/stream day Synthane	35	710	2.9
BEULAH, NORTH DAKOTA	3000 MWe Power Plant 250 x 10^6 scf/stream day Lurgi	20	0	2.6
GILLETTE, WYOMING	3000 MWe Power Plant 250 x 10^6 scf/stream day Synthane 250 x 10^6 scf/stream day Lurgi	170	2000	3.0
RIFLE, COLORADO	1000 MWe Power Plant	10	2330	1.6
NAVAJO/FARMINGTON, NEW MEXICO	3000 MWe Power Plant 250 x 10^6 scf/stream day Synthane	15	200	3.1
KAIPAROWITS/ESCALANTE, UTAH	1. 3000 MWe Power Plant	45	2780	2.8
	2. 3000 MWe Power Plant	25	2100	2.8

Table 4-11. Evaluated costs of supplying water.

SITE	Evaluated Costs ($\$10^6$/yr)				Power Plant Costs ($/1000 gallons water evaporated)
	Pipeline Installation	Pumping	Total	Total Power Plant	
COLSTRIP, MONTANA	3.06	0.96	4.02	3.11	0.42 (0.48)
BEULAH, NORTH DAKOTA	1.58	0.32	1.90	1.66	0.24 (0.26)
GILLETTE, WYOMING	15.43	4.28	19.71	13.48	1.82 (2.23)
RIFLE, COLORADO	0.47	0.38	0.85	0.85	0.33 (0.33)
NAVAJO/FARMINGTON, NEW MEXICO	1.38	0.38	1.76	1.36	0.18 (0.20)
KAIPAROWITS/ESCALANTE, UTAH	3.75	1.80	5.55	5.55	0.71 (0.71)
	2.08	1.21	3.29	3.29	0.42 (0.42)

The last column is the cost of supplying water to the power plant divided by the total amount of water evaporated during the year. The numbers in parenthesis are the results of calculations done by assuming that the pipeline supplies water only for the power plant and not for any of the Lurgi or Synthane plants.

Table 4-12 summarizes the costs of water treatment, blowdown disposal and water supply at each of the sites and compares them to the breakeven water costs. In none of the cases does the cost of water exceed the breakeven water costs indicating that wet cooling is preferred at each of the sites. Only at Gillette, Wyoming, where the power plant is 170 miles from the water source and the cost of supplying water is quite high, does the cost of water even begin to approach the breakeven water costs, and even then only for the high back pressure turbines.

We should note that our estimates of water costs are low. For example, the cost of water treatment and blowdown disposal can be about a factor of two or three higher, while the costs of water supply does not include the costs of water rights. A typical range of water rights costs is $10/acre ft to $100/acre ft or 3¢-30¢/1000 gallons. Even with these factors added it still appears that wet cooling would be preferred at all of the sites.

4.4 Costs of Wet-Dry Cooling Systems

If sufficient water is available it would appear that, because of the large difference in capital costs between dry and evaporative cooling towers, evaporative cooling is preferred at each of the sites considered. However, if water is scarce or if a firm water supply is not available, it would be advantageous to use a combination dry and evaporative cooling system. The

Table 4-12. Summary of evaluated water costs.

SITE	Evaluated Water Costs ($/1000 gallons of water evaporated)			Breakeven Water Costs ($/1000 gallons of water evaporated)	
	Water Treatment and Blowdown Disposal	Water Supply	Total	High Back Pressure Turbine	Conventional Turbine
COLSTRIP, MONTANA	0.17	0.42	0.59	2.89	4.35
BEULAH, NORTH DAKOTA	0.22	0.24	0.46	2.96	4.71
GILLETTE, WYOMING	0.20	1.82	2.02	2.94	5.08
RIFLE, COLORADO	0.23	0.33	0.56	3.04	5.05
NAVAJO/FARMINGTON, NEW MEXICO	0.20	0.18	0.38	2.85	4.19
KAIPAROWITS/ESCALANTE, UTAH	0.31	0.71	1.02	2.93	4.63
		0.42	0.73		

The purpose of this cooling system is to reduce the evaporative cooling tower makeup water requirements as well as the capital costs of the dry cooling tower. The system shown in Fig. 4-4 was analysed to show the effect of makeup water requirements on the evaluated costs of the cooling system. The cooling system uses a conventional mechanical draft wet tower and a separate conventional mechanical draft dry tower; the cooling media for each tower flows in separate circuits. The dry tower operates during the whole year with its greatest operating efficiency in winter while the evaporative tower operates in warmer weather during periods of peaking. The evaporative tower operates only when the turbine back pressure would exceed 5 in Hg absolute with the dry tower alone.

R. W. Beck and Associates performed the wet/dry tower calculations by combining the separate evaporative and dry cooling tower computer programs described previously into a single program. The dry cooling system is designed for a whole range of ITD (dry tower initial temperature difference) and TTD (condenser terminal temperature difference) (see Fig. 4-1) as is done for the case of the dry tower alone, with the constraint that the turbine back pressure not exceed 5 in Hg absolute. For a given ambient air temperature both the heat rejection to the condenser and the heat load to the dry tower are known; the difference between the two is the required heat load to the evaporative cooling tower. The operating conditions for the wet cooling tower are also known. A series of wet towers are calculated varying the range and approach temperature to meet the required operating conditions and heat load. The wet tower is sized to meet the maximum performance requirements associated with the given range of operating conditions. For off-design conditions it is assumed that the minimum required number of wet tower segments

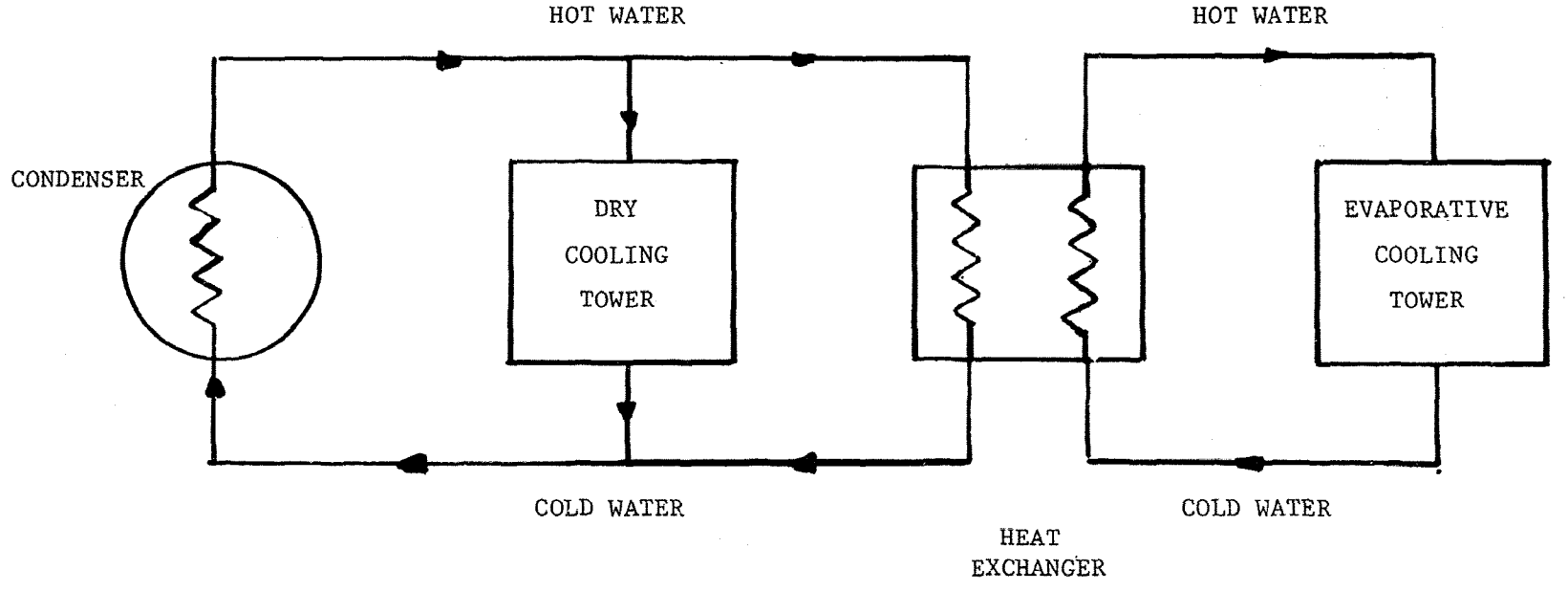

Fig. 4-4. Wet/dry cooling system.

will be operated and that fan horsepower will be reduced in order to conserve water and minimize auxiliary energy requirements. At each ITD, the total evaluated costs for the combination wet and dry towers are optimized.

Table 4-13 lists the optimum wet/dry cooling tower combinations at Navajo/Farmington, New Mexico for different water costs, as well as the dry cooling system with an auxiliary tower and the all evaporative cooling system presented in the preceding sections. Fig. 4-5 shows the total annual evaluated costs of the wet/dry cooling system as a function of the water evaporated in the evaporative cooling tower expressed as a percentage of evaporative loss of the all evaporative cooling system. There is virtually no difference in the evaluated cost with the cost of water to $1.00/1000 gallons of evaporated water. The highest values of ITD considered correspond to points of inflection in the curves shown in Fig. 4-5.

It is shown on Fig. 4-5 that when water costs above about $2.20/1000 gallons partial dry cooling is more economical than all wet cooling. The term "breakeven cost" of water is the cost associated with that curve for which the annual charge is equal at both ends, i.e., $4.19/1000 gallons (Table 4-6) as shown on Fig. 4-5. The actual water cost at which partial dry cooling becomes economical may be $0.20-$0.30/1000 gallons of water evaporated more than the estimated value of $2.20/1000 gallons because of the increase in the total annual evaluated cost with increasing water costs.

As was shown previously, the cost difference between a dry cooling system and an all wet cooling system is relatively insensitive to site, at least for the sites considered in this study. If a water cost of $2.20-$2.50/1000 gallons of water evaporated were used at all the sites, then Table 4-12 indicates that except for Gillette, Wyoming, all evaporative cooling systems

Table 4-13. Total annual evaluated costs for optimum wet/dry cooling systems at Navajo/Farmington, New Mexico.

Dry Tower		Wet Tower		Wet Tower Evaporative Loss	Total Annual Evaluated Costs (10^6/yr)		
ITD (°F)	TTD (°F)	Range (°F)	Approach (°F)	(10^6 gallons/yr)	($0/1000 gallons water evaporated)	($0.50/1000 gallons water evaporated)	($1.00/1000 gallons water evaporated)
30	6	16.2	20	5.51	124.800	124.803	124.806
35	5	29.9	19	16.67	121.303	121.311	121.320
40	5	29.9	19	44.37	118.060	118.082	118.104
45	5	30.0	19	95.53	116.011	116.059	116.107
50	5	29.9	19	194.25	114.341	114.438	114.535
55	5	29.8	19	319.45	112.758	112.918	113.077
60	5	29.7	19	488.82	111.465	111.709	111.953
65	5	29.6	19	685.13	110.640	110.982	111.325
70	5	28.4	20	917.47	109.773	110.232	110.690
75	5	28.3	20	1158.69	109.130	109.709	110.289
80	5	28.3	20	1411.58	108.380	109.086	109.792
82	5	28.3	20	1514.22	108.239	108.996	109.753
84	5	28.3	20	1629.55	108.117	108.932	
(1) 31	6	- *	- *	4.85	123.613	123.615	123.618
(2) -	-	26.4	28	7686.0	91.371	95.214	99.057

(1) Dry cooling system with auxiliary tower.

(2) Evaporative cooling system.

* Conditions not specified for auxiliary tower.

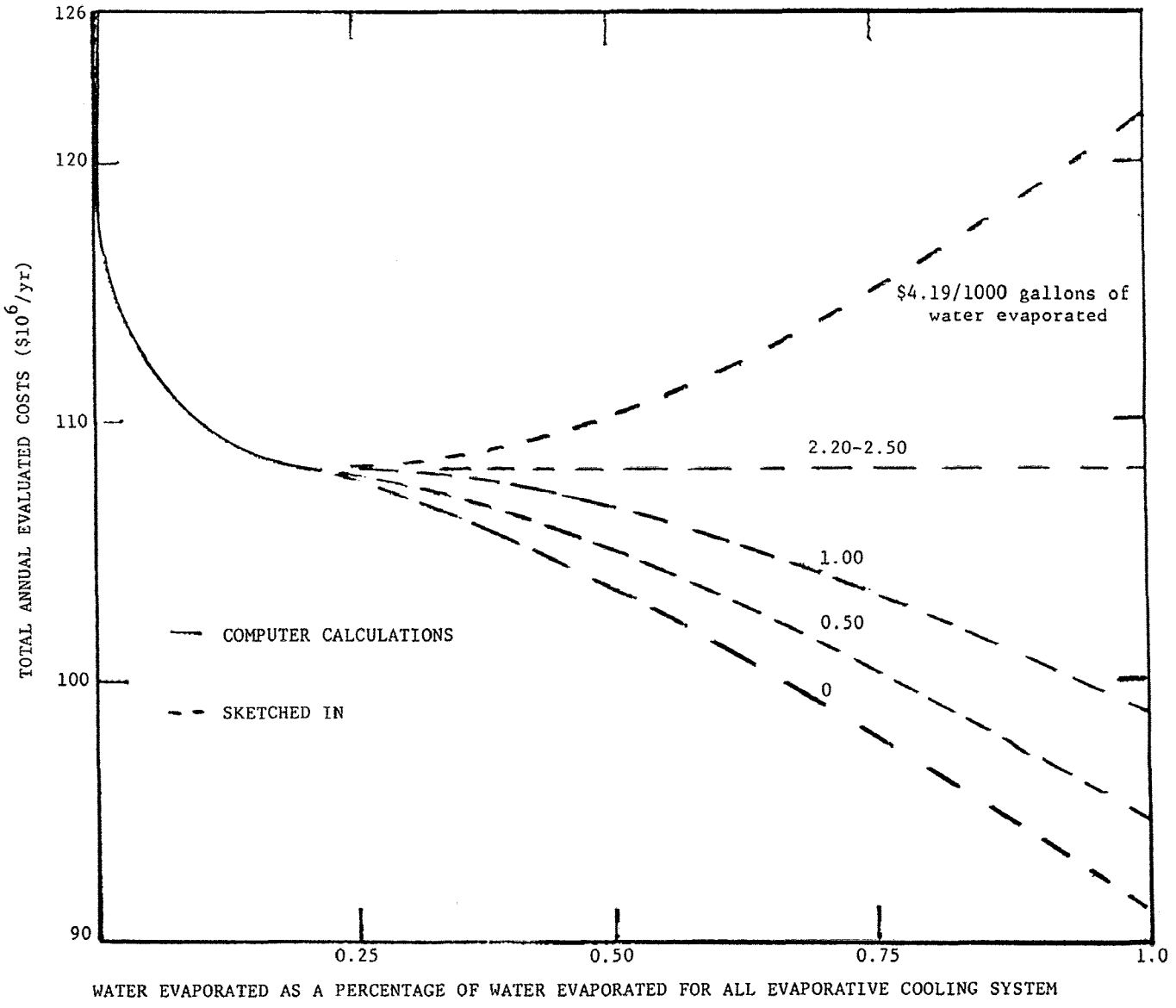

Fig. 4-5. Total annual evaluated costs of wet/dry cooling system as a percentage of evaporative loss of all evaporative cooling system at Navajo/Farmington, New Mexico.

would be preferred if sufficient water is available. At Gillette, Wyoming the choice of an all evaporative cooling system would be marginal. However, a savings in total water consumed in the cooling tower of about 75% of that required by all evaporative cooling would be made at the expense of only 50% of the difference in evaluated costs between dry and all evaporative cooling.

4.5 Water Consumed and Solid Residuals Generated

The total water evaporated at each of the sites is shown in Table 4-6 and repeated again in Table 4-14. The tower calculations were made by R. W. Beck and Associates using the computer program mentioned in Section 4.2, which is based upon the method of Merkel (see p. 587 of Ref. 14). These quantities are also repeated in the summary tables of Section 10. The total cooling tower heat load as well as the heat dissipation rate is also shown in Table 4-14. This is to be compared to the dissipation rates for the process cooling water shown in Table 2-12.

As discussed in Section 4.3 the treatment of cooling water yields waste sludges which are about 40% solids - 60% water. These sludges are derived primarily from lime-soda softening, dust concentration, and thickening. The wastes produced at each site are shown in Table 4-15 and repeated again in the summary tables in Section 10. The water evaporated is obtained from Table 4-14.

Blowdown is not the only liquid waste effluent from a cooling tower. Small droplets of cooling water having the same contaminants and concentrations as the blowdown are entrained into the air flow and are carried out of the tower onto the surrounding terrain. Local vegetation and groundwater supplies may

Table 4-14. Water evaporated and heat dissipation rates for cooling towers.

SITE	Total Water Evaporated (10^6 gallons/yr)	Water Evaporated (gallons/calendar minute)	Cooling Tower Heat Load (10^{12} Btu/yr)	Heat Dissipation Rate (Btu/lb water evaporated)
COLSTRIP, MONTANA	7377	14,040	86.87	1414
BEULAH, NORTH DAKOTA	7023	13,360	86.87	1484
GILLETTE, WYOMING	7398	14,075	86.35	1401
RIFLE, COLORADO	2567	4,867	28.96	1354
NAVAJO/FARMINGTON, NEW MEXICO	7686	14,617	86.87	1357
KAIPAROWITS/ESCALANTE, UTAH	7764	14,770	86.87	1343

Table 4-15. Residuals generated at each site.

SITE	Wet-Solid Slurry (tons per 1000 gallons of water evaporated)	Dry Solids in Slurry (tons per 1000 gallons of water evaporated)	Water in Slurry (gallons per 1000 gallons of water evaporated)	Wet-Solid Slurry (tons/c. day)	Dry Solid (tons/c. day)	Water in Slurry (gal/c. min)
COLSTRIP, MONTANA	0.0075	0.0030	1.079	151.6	60.6	15.1
BEULAH, NORTH DAKOTA	0.0088	0.0035	1.271	169.3	67.3	17.0
GILLETTE, WYOMING	0.0090	0.0036	1.295	182.4	73.0	18.2
RIFLE, COLORADO	0.0064	0.0026	0.911	45.0	18.3	4.4
NAVAJO/FARMINGTON, NEW MEXICO	0.0081	0.0032	1.175	170.6	67.4	17.2
KAIPAROWITS/ESCALANTE, UTAH	0.0123	0.0049	1.774	261.6	104.2	26.2

be affected by the deposition of the salt-containing droplets. The amount of drift is measured as a percentage of the total circulating cooling water through the tower. Until recently drift losses of less than 0.2 percent were guaranteed by the tower manufacturers. Now, with the development and addition of new drift eliminators, drift rates as low as 0.002 to 0.005 percent have been measured on several new towers,with the lower drift rate attributed to natural-drift towers and the higher rate to mechanical-draft towers. For this study a drift rate of 0.005 percent was used. The circulating water flow rates as well as the drift rates are summarized in Table 4-16; the drift rates are repeated in the summary tables of Section 10.

The demineralizer waste is taken to be 50% moisture and to have a solids content of 1.6 times the total dissolved solids in the makeup water. This corresponds to complete deionization of the makeup water with a regenerant usage of 160% of the stoichiometric values. The boiler makeup water was taken to be 300 gallons/stream minute (210 gallons per calendar minute) per 3000 MWe. Table 4-17 shows the soluble wet-solids sludge generated from the demineralizer waste.

Table 4-16. Drift rates.

SITE	Circulating Flow Rate (gallons per stream minute)	Drift Rates (gallons per stream minute)	Drift Rates (gallons per calendar minute)	Drift Rates (10^6 gallons/yr)
COLSTRIP, MONTANA	1,071,870	53.59	37.51	19.7
BEULAH, NORTH DAKOTA	1,032,795	51.64	36.15	19.0
GILLETTE, WYOMING	1,147,152	57.36	40.15	21.1
RIFLE, COLORADO	344,265	17.21	12.05	6.3
NAVAJO/FARMINGTON, NEW MEXICO	1,071,870	53.59	37.51	19.7
KAIPAROWITS/ESCALANTE, UTAH	1,032,795	51.64	36.15	19.0

Table 4-17. Demineralizer residuals.

SITE	Wet-Solids Sludge (tons/c.day per 1000 g/c. min)	Boiler Makeup (gal/c. min)	Wet-Solids Sludge (tons/c. day)	Dry Solids (tons/c. day)	Water in Solid (gal/c. min)
COLSTRIP, MONTANA	7.95	210	1.6	0.8	0.1
BEULAH, NORTH DAKOTA	8.22	210	1.7	0.9	0.1
GILLETTE, WYOMING	7.56	210	1.6	0.8	0.1
RIFLE, COLORADO	4.61	70	0.3	0.2	0.03
NAVAJO/FARMINGTON, NEW MEXICO	5.76	210	1.2	0.6	0.1
KAIPAROWITS/ESCALANTE, UTAH	11.06	210	2.3	1.2	0.2

References

1. Rossie, J. P., Mitchell, R. D. and Young, R. O., "Ecomomics of the Use of Surface Condensers with Dry-Type Cooling Systems for Fossil-Fueled and Nuclear Generating Plants," R. W. Beck and Associates, Denver, Colorado, U. S. Atomic Energy Commission Report No. TID-26714 (UC-12), December 1973.

2. Rossie, J. P., Cecil, E. A. and Young, R. O., "Cost Comparison of Dry-Type and Conventional Cooling Systems for Representative Nuclear Generating Plants," R. W. Beck and Associates, Denver, Colorado. U.S. Atomic Energy Commission Report No. TID-26007 (UC-80), March 1972.

3. Mitchell, R. D., "A Method for Optimizing and Evaluating Indirect Dry-Type Cooling Systems for Large Steam-Electric Generating Plants," R. W. Beck and Associates, Denver, Colorado, U.S. Energy Research and Development Administration Report No. ERDA-74 (UC-12), June 1975.

4. "Heat Sink Design and Cost Study for Fossil and Nuclear Power Plants," United Engineers and Constructors, Inc., U.S. Atomic Energy Commission Report No. WASH-13600 (UC-13 & 80), December 1974.

5. Corey, G. R., "A Comparison of the Cost of Nuclear versus Conventional Electric Gneeration," Commonwealth Edison Company, Boston, MA, December 1975.

6. Gold, H., Goldstein, D. J. and Yung, D., "The Effect of Water Treatment on the Comparative Costs of Evaporative and Dry Cooled Power Plants," Water Purification Associates, Cambridge, Mass., ERDA Report No. COO-2580-1, June 1976.

7. Crits, G. J. and Glover, J., "Cooling Blowdown in Cooling Towers," Water and Wastes Engineering, 45-52, April 1975.

8. Applebaum, B., Demineralization by Ion Exchange, pages 23-67, Academic Press, 1968.

9. Mindler, A.B., Permutit Research and Development Center, Princeton, N.J., personal communication.

10. Kleusner, J., Heist, J. and Van Note, R. H., "A Demonstration of Wastewater Treatment for Reuse in Cooling Towers at Fifteen Cycles of Concentration," presented at AIChE Water Reuse Conference, May, 1975

11. Betz Handbook of Industrial Water Conditioning, Betz Laboratories, Inc., Trevose, PA 19047.

12. Comley, W. D., Private Communication, Stone and Webster Engineering Corporation, Boston, Massachusetts (September 3, 1975).

13. "Appraisal Report on Montana-Wyoming Aqueducts," U.S. Department of the Interior, Bureau of Reclamation, Washington, D.C. (April 1972).

14. Kern, D. Q., Process Heat Transfer, McGraw-Hill Book Co., Inc., New York (1950).

5. SLURRY PIPELINE

The coal slurry pipeline is a method of hydraulically transporting coal from the mine to its point of use. Long distance coal slurry transport may involve distances of several hundred miles or as much as a thousand miles, as in the case of the proposed ETSI piepline from Gillette, Wyoming to White Bluff, Arkansas[1]. In addition to the mining of the coal, the process of slurry preparation involves size reduction by crushing the coal, adding the slurry water to the crushed coal and then grinding it finely. Chemical treatment may be added after grinding to improve the slurry characteristcs, following which the slurry is sent to agitated storage tanks prior to pumping[2]. These processing steps are those which have been described for transporting low ash, low sulfur coals as in the proposed Gillette pipeline or in the operational Black Mesa piepline in Arizona[3,4]. We suggest that where the transport of a high ash coal such as from Farmington be involved, then coal washing prior to grinding should be added to the processing steps.

By far the largest quantity of water is required for the slurrification itself, in which about an equal weight of water and coal are mixed. The process can be somewhat arbitrarily broken down into a mine and plant stage. The mine stage is considered to include mining, breaking and first stage crushing. The plant stage is taken to include processing and slurry preparation. A typical but by no means unique process description is as follows.

Mine

(i) Primary breakers reduce run-of-mine coal to a top size of, say, 4 to 8 inches.

(ii) First stage crushers reduce coal to a top size of, say, 2 inches for storage prior to preparation.

Plant

(i) Storage bins of say, 2 hour capacity, receive belt fed coal from storage piles.

(ii) Scalping (vibrating) screens receive belt fed coal from bins and separate out oversize coal (say, > ¼ inch) for transport to impact crushers. Undersized coal (say, < ¼ inch) joins product from impact crushers.

(iii) Impact crushers reduce the product to 99% passing ¼ inch (80% passing 5000 μm).

(iv) Water at about 50 wt.% is added to the crushed coal in gravity feed chutes.

(v) Wet rod mill receives mixture of water and coarse solids and grinds coal down to a top size of all passing 28 mesh (80% passing 300 μm). In no case should the top passing size be greater than 8 mesh.

(vi) Agitated slurry storage tanks receive the slurry after pumping from the sumps into which it is discharged from the mills. Any coarse, fast-settling particles are either recycled or sent to a dump pond, and the final product is sent into the pipeline.

The water requirements for the mine stage will be evaluated in Section 7, along with the mining requirements for the other processes, since they all differ only in quantity but not in kind. Similarly, the water requirements for basin and reservoir evaporations, plant dust control and service and potable water uses will be evaluated in Section 8 along with these same requirements for the other processes considered in this assessment.

The principal power requirements for the plant include

in-plant coal transfer

crushing

grinding

in-plant pumping

slurry mixing and agitation

pipeline pumping (first stage)

plant service electricity

Of these, the grinding power and power for the first stage of pumping far exceed all the other requirements combined. For the example illustrated the grinding power would be about 14.5 MWe based on 6.8 hp-hr/ton[2] and 25×10^6 tons/yr. A first stage pump station would consume about 14.8 MWe[5]. The total electric power requirement is seen to be relatively small and will therefore be assumed to be purchased, with no direct water consumption charged to power generation. For the power consumption uses described cooling water requirements will be negligible.

From the above discussion we conclude that the principal process water requirement is for slurrification. Assuming a 50/50 mixture by weight of coal and water, then to transport 25×10^6 tons/year of coal at a 100% load factor the slurry water requirement is

$$25 \times 10^6 \frac{\text{tons}}{\text{yr}} \times 2{,}000 \frac{\text{lbs}}{\text{min}} \times \frac{1 \text{ gal}}{8.33 \text{ lbs}} \times \frac{1 \text{ yr}}{365 \text{ days}} \times \frac{1 \text{ day}}{1440 \text{ mins}}$$

$$= 11{,}420 \text{ gal/calendar min.}$$

References

1. Odasz, F. B., "Coal Slurry Pipelines," Energy, Water and the West (E.R. Gillette, ed.), p. 67, Am. Assoc. for Advance. of Science, Washington, D.C., 1976.

2. Cowper, N. T., et al., "Processing Steps: Keys to Successful Slurry Pipeline Systems," Chemical Engineering 79(3), 58-67, Feb. 7, 1972.

3. Ctvertnicek, T.E., Rusek, S.J., and Sandy, C.W., "Evaluation of Low-Sulfur Western Coal Characteristics, Utilization, and Combustion Experience," pp. 150-154, EPA-650/2-75-046 (NTIS PB-243 911), U.S. Env. Prot. Agency, Office of Res. & Dev., Washington, D.C., May 1975.

4. Neihaus, E. D., "Water and Energy Requirements in the Mining and Processing of Coal," in Proc. Conf. on Water Requirements for Lower Colorado Basin Energy Needs, pp. 151-164, Office of Arid Lands Studies, Univ. of Arizona, Tucson, Arizona, May 8, 1975.

5. Energy Transportation Systems, Inc., Unpublished Document, Casper, Wyoming, Feb. 21, 1974. Summarized in memorandum of E. Rappaport, Radian Corp., Austin, Texas.

6. FLUE GAS DESULFURIZATION

6.1 Particulate and Sulfur Removal

Process steam is generated in coal-fired boilers for the electric power and Lurgi plants examined in this study. In the Synthane process char is burnt to generate process steam. The burning of coal, even low sulfur Western coal, and of char generates both particulates and oxides of sulfur in the exiting flue gases. Particulate removal to meet air quality standards need not involve significant water consumption if electrostatic precipitators are used, although some water will be consumed in disposing of the fly ash. We will therefore reserve our discussion of the water needed for particulate removal to Section 8, where solids disposal is considered, since this need for water is for the most part related to ash disposal.

Sulfur dioxide (SO_2) represents 98% of the sulfur oxide pollutants and its removal from the combustion gases before they are released to the stack generally involves an important use of water. The most likely procedures for use in the near future are the wet scrubbing systems that utilize limestone ($CaCO_3$), hydrated or slaked lime ($Ca(OH)_2$) or both. In the wet limestone process the flue gas contacts a wet limestone slurry in the scrubber and the SO_2 is removed following the reaction

$$CaCO_3 + SO_2 \longrightarrow CaSO_3 + CO_2, \tag{6.1}$$

with

$$CaSO_3 + \tfrac{1}{2}O_2 \longrightarrow CaSO_4. \tag{6.2}$$

The scrubber effluent generates a spent slurry following the reactions

$$CaSO_3 + \tfrac{1}{2}H_2O \longrightarrow CaSO_3 \cdot \tfrac{1}{2}H_2O \downarrow, \tag{6.3}$$

$$CaSO_4 + 2H_2O \longrightarrow CaSO_4 \cdot 2H_2O \downarrow. \tag{6.4}$$

In the wet lime scrubbing system the gas containing the SO_2 is reacted with a wet lime slurry following the reaction

$$Ca(OH)_2 + SO_2 \longrightarrow CaSO_3 + H_2O. \qquad (6.5)$$

Reactions (6.2) to (6.4) follow.

In any of these procedures water leaves the system as a vapor in the flue gas and in the slurry of spent solids. In what follows we examine these two streams separately and present methods for estimating the water in these streams independent of the specific scrubbing procedure or its details.

6.2 Water in Flue Gas

To estimate the quantity of water which leaves the scrubbed flue gas we make the assumption that this gas is saturated with water vapor at the temperature and pressure at which it leaves the scrubber in the final absorber and before any reheat. The dependence on temperature and pressure of the water content is illustrated in Table 6-1 which shows the moles of water vapor per mole of dry gas at saturation.

Table 6-1. Moles of water vapor per mole of dry gas at saturation.

Total Pressure / Temperature		(psia)	14.696	15.057	15.418
		(in. H_2O gauge)	0	10	20
(°F)	(°C)				
120	49		0.130	0.127	0.123
130	54		0.178	0.173	0.168
140	60		0.245	0.237	0.231
150	66		0.339	0.328	0.318
160	71		0.476	0.460	0.444

From Table 6-1 it is clear that lack of knowledge of the pressure of saturation in the range of interest will give an error of not more than 7%. However if the temperature of saturation is $10^{\circ}F$ higher than was assumed the water content of the flue gas will be about 40% higher than calculated. This indicates a severe limitation on the ability to estimate the quantity of water in the flue gas without detailed and precise information on the gas temperature. Moreover, this also shows that large variations in the flue gas water consumption can be expected in the plants unless temperature control is very tight, which it is generally not. After comparing with published results we have selected for saturation conditions $120^{\circ}F$ ($49^{\circ}C$) and 10 inches of water gauge, so that the fuel gas is calculated to contain 0.13 moles water per mole of dry gas.

We next need to know the dry flue gas volume. Assuming negligible carbon monoxide and nitrogen oxides the dry flue gas volume is given by the formula derived in Table 6-2. As given there, the total moles of dry flue gas per unit weight of coal or char, as fired, are

$$(4.76)(1 + a)\left(\frac{c}{12} + \frac{s}{32}\right) + (3.76 + 4.76a)\left(\frac{h}{4} - \frac{x}{32}\right), \qquad (6.6)$$

where a, c, s, h and x are the weights of each element as defined in Table 6-2 per unit weight of coal or char. The water carried away by the gas which was not in the gas before scrubbing, that is, the makeup water requirement for gas saturation at $120^{\circ}F$ and 10 inches of water then becomes in weight per unit weight of coal or char as fired (lb/lb coal or char)

$$(4.76)(0.13)(1 + a)\left(\frac{c}{12} + \frac{s}{32}\right)(18) + (0.13)(3.76 + 4.76a)\left(\frac{h}{4} - \frac{x}{32}\right)(18) - w - \frac{h}{9}. \qquad (6.7)$$

Table 6-2. Determination of total moles of dry flue gas per unit weight of coal or char as fired.

Basis: Unit weight of coal or char containing:

Element	Wt.	Formula	Moles
Carbon	c	C	c/12
Hydrogen	h	H_2	h/2
Oxygen	x	O_2	x/32
Sulfur	s	S	s/32
Moisture	w	H_2O	w/18

The fraction excess air is a.

Flue gas component	Moles in dry gas	Moles O_2 required
Carbon dioxide, CO_2	$\frac{c}{12}$	$\frac{c}{12}$
Water, H_2O		$\frac{h}{4} - \frac{x}{32}$
Sulfur dioxide, SO_2	$\frac{s}{32}$	$\frac{s}{32}$
	Total	$\frac{c}{12} + \frac{h}{4} - \frac{x}{32} + \frac{s}{32}$
Oxygen, O_2	$a(\frac{c}{12} + \frac{h}{4} - \frac{x}{32} + \frac{s}{32})$	
Nitrogen, N_2	$(\frac{79}{21})(1 + a)(\frac{c}{12} + \frac{h}{4} - \frac{x}{32} + \frac{s}{32})$	
Total	$4.76(1 + a)(\frac{c}{12} + \frac{s}{32}) + (3.76 + 4.76a)(\frac{h}{4} - \frac{x}{32})$	

The excess air, a, varies from about 0.05 to 0.2 and will very seldom be known exactly. We take a = 0.15 recognizing that changes in this quantity over the range indicated will generally not introduce an error into the results of greater than 10%. However, for very high moisture content coals such as lignites, where w is large, the relative error could be somewhat larger because the absolute makeup requirement is small. Using the value of excess air noted, Eq. (6.7) reduces to

$$\frac{\text{lb makeup water}}{\text{lb coal or char}} = 12.8\left(\frac{c}{12} + \frac{s}{32}\right) + 10.5\left(\frac{h}{4} - \frac{x}{32}\right) - w - \frac{h}{9} \ . \quad (6.8)$$

In Table 6-3 we have used the above formula to calculate the weight of makeup water required per unit weight of coal or char as fired, for the coals and char considered in the present study. As already noted, the largest single factor affecting the water requirement is seen to be the moisture content of the coal. The quantities of flue gas desulfurization water leaving with the boiler flue gases presented in Section 10 are based on the values shown in Table 6-3 multiplied by the known coal or char feed rates to the boilers.

Table 6-3. Element weights per unit weight of coal or char and makeup water requirements per unit weight of coal or char for coals and char of present study.

Mine Location	c	h	x	s	w	lb water/lb coal
Beulah, N.D.	.404	.027	.119	.007	.360	.104
Gillette, Wyo.	.494	.034	.128	.003	.280	.291
Colstrip, Mont.	.506	.032	.098	.011	.247	.345
Kaiparowits, Utah	.616	.043	.109	.004	.148	.583
Navajo, N.M.	.473	.035	.096	.009	.124	.439
Rifle, Colo.	.710	.054	.076	.006	.064	.806
All sites, Synthane char	.636	.010	.014	.003	0	.700

6.3 Water in Waste Solids

As indicated by Eqs. (6.3) and (6.4) there are two major solids wastes, $CaSO_3 \cdot \frac{1}{2}H_2O$ and $CaSO_4 \cdot 2H_2O$. In addition, unreacted limestone, $CaCO_3$, and slaked lime, $Ca(OH)_2$, are also wasted. The amount of water leaving in the waste solids depends on the quantity of sulfur and the slurry concentration. In Table 6-4 is shown for the two major products the weight of solid per unit weight of sulfur and the weight of water per unit weight of sulfur.

Table 6-4. Weight of $CaSO_4 \cdot 2H_2O$ and $CaSO_3 \cdot \frac{1}{2}H_2O$, and water of hydration per unit weight of sulfur.

Crystal Form	lb solid/lb sulfur	lb water/lb sulfur
$CaSO_4 \cdot 2H_2O$	5.38	1.13
$CaSO_3 \cdot \frac{1}{2}H_2O$	4.03	0.28

Assuming a given solids concentration in the waste slurry, the weight of slurry water per unit weight of sulfur can be calculated. In Table 6-5 the weight of the slurry water per unit weight of sulfur is shown for a 40 wt.% solids concentration, which represents a well dewatered waste obtained by gravity thickening. Vacuum filtration could increase the percent solids to 60% and vacuum filtration plus centrifugation could raise this figure to 70%[1]. However, these mechanical dewatering techniques would only be practiced if transport of the sludge to distant landfill were envisaged, which is not the case for the Western sites considered in this study.

Table 6-5. Weight of slurry water per unit weight of sulfur for a 40 wt.% solids concentration.

Crystal Form	lb slurry water/lb sulfur
$CaSO_4 \cdot 2H_2O$	8.07
$CaSO_3 \cdot \frac{1}{2}H_2O$	6.05

In Tables 6-6a and 6-6b we have given the compositions in weight fractions of lime and limestone scrubber sludges as reported in Ref. 1. In Ref. 1 the calcium sulfite was assumed to be in the crystalline form $CaSO_3 \cdot 2H_2O$. It is now generally agreed that the form in the sludges is $CaSO_3 \cdot \frac{1}{2}H_2O$. We have therefore corrected the weight fractions given in Ref. 1 to the values shown in Table 6-6, which correspond to the accepted crystalline form of calcium sulfite. Also shown in these tables are the corresponding weight fractions of sulfur and water of hydration, calculated using the values given in Table 6-4. All values in Tables 6-6 are stated as pounds of solids, with one pound of sludge solids as the basis, rather than as weight fractions.

Table 6-6a. Weight of components of lime sludge (dry) and corresponding weights of sulfur and water of hydration.

Component	lb solid	lb sulfur	lb water
$CaCO_3$	.058	0	0
$CaSO_3 \cdot \frac{1}{2}H_2O$	.690	.171	.048
$CaSO_4 \cdot 2H_2O$	.126	.023	.026
$Ca(OH)_2$	.126	0	0
Total	1.000	.194	.074

Table 6-6b. Weight of components of limestone sludge (dry) and corresponding weights of sulfur and water of hydration.

Component	lb solid	lb sulfur	lb water
$CaCO_3$	.367	0	0
$CaSO_3 \cdot \frac{1}{2}H_2O$	.533	.132	.037
$CaSO_4 \cdot 2H_2O$	.100	.019	.021
$Ca(OH)_2$	0	0	0
Total	1.000	.151	.058

From the data of Tables 6-6 we have calculated the weight of solids and of the water of hydration per unit weight of sulfur for the lime and limestone processes. These figures are given in Table 6-7.

Table 6-7. Weight of solids and water of hydration per unit weight of sulfur in lime and limestone sludges.

Process	lb solid/lb sulfur	lb water/lb sulfur
Lime	5.2	0.38
Limestone	6.6	0.38

Table 6-7 shows that the unit weights of solids are reasonably close and that we may with little error take the average of the two values as representative of any wet lime, limestone or lime-limestone scrubbing process, that is, 5.9 lb solid/lb sulfur. It is also clear from the table that the water of hydration can represent only a very small fraction of the total makeup water (slurry water plus water of hydration) so that we will

neglect this contribution and assume that the makeup water equals the slurry water. In this case we may write

$$\frac{\text{lb makeup water}}{\text{lb sulfur}} = 5.9\left(\frac{1 - m}{m}\right), \tag{6.9}$$

where m is the weight fraction of solids in the waste (i.e., weight of solids divided by the weight of water plus solids). Note that a change to 30% solids from 40% solids makes a 50% increase in the water in the waste, since (1 - m)/m changes from 1.5 to 2.3. A change to 50% solids makes (1 - m)/m equal to 1 and decreases the water in the waste by 33%.

In Table 6-8 we have tabulated for the coals and char of Table 6-3 the slurry makeup water for m = 0.4, along with the total makeup water for the waste disposal including the flue gas water. It should be noted here, that though the quantity of slurry makeup water is strongly affected by any change in solids fraction this change has much less of an effect on the total quantity of water makeup. It can be seen from Table 6-8 that with a solids fraction even as high as 0.4, the water in the waste is only important with the higher sulfur coals. Again the exception to this is the wet lignite (Beulah, N.D.) where the flue gas water makeup is so small that even the small amount of slurry makeup represents a sizeable fraction of the total.

6.4 Comparison of Present Approach

There is little reported data with which to directly compare the estimates provided by the present approximate formulation for the coals examined. One engineering design estimate has been given for the Kaiparowits coal[2]. The wet lime flue gas desulfurization design was made for a nominal 3,000 MWe plant, and the estimates made in Ref. [2] are compared below in Table 6-9 with our approximate estimates derived from Eqs.(6.8) and (6.9) with m = 0.4.

Table 6-8. Weight of sulfur and makeup water requirements per unit weight of coal for coals of present study and with 40 wt.% solids in slurry.

Mine Location	s	lb water/lb coal in solids	total
Colstrip, Mont.	.0109	.097	.442
Navajo, N.M.	.0091	.081	.520
Beulah, N.D.	.0070	.062	.166
Rifle, Colo.	.0056	.050	.856
Kaiparowits, Utah	.0042	.037	.620
Gillette, Wyo.	.0032	.028	.319
All sites, Synthane char	.0026	.023	.723

Table 6-9. Comparison of flue gas desulfurization makeup water requirements for Kaiparowits coal from design estimates of Ref. 2 and present approximate formulation.

Estimate	lb water/lb coal in solids	in flue gas	total
Impact statement[2]	.031	.514	.545
Present calculation	.037	.583	.620

The agreement as shown in Table 6-9 between the estimates is seen to be quite good, although our result is somewhat higher than that from the impact statement. A similar conclusion is borne out by a comparison with experimental results for other coals. It should be noted that had the present solids calculation been based on our wet lime result of 5.2 lbs of solids per lb of sulfur, rather than the lime-limestone average of 5.9, the water in the solids would have been .033 instead of .037. In summary,

it is felt that our approach is sufficiently accurate for the present purposes and gives a conservative picture of the water requirements.

References

1. Cooper, H.B., "The Ultimate Disposal of Ash and Other Solids from Electric Power Generation," in Water Management by the Electric Power Industry (E.F. Gloyna, H.H. Woodson and H.R. Drew, editors), pp. 183-195, Center for Research in Water Resources, The University of Texas at Austin, 1975.

2. Bureau of Land Management, "Final Environmental Impact Statement Proposed Kaiparowits Project," Vol. I, pp. I-89, 105, FES 76-12, March 3, 1976.

7. MINING

7.1 Categories

In the sections that follow we present the general methodology for calculating the amount of water consumed in the mining of coal or shale and in any subsequent land reclamation which may be required. The water quantities for this category of usage generally will not be too strongly affected by the conversion process, except as it determines the actual quantity of material to be mined. However, the mine location and whether the mining is surface or underground will be strong determinants of the quantity of water consumed.

We list below the principal categories of consumed water applicable to coal or shale mining:

Road, Mine and Embankment Dust Control
Handling and Crushing Dust Control
Service and Fire Water
Sanitary and Potable Water
Revegetation
Coal Washing

In the following sections we will discuss separately each of these categories. When water is limited, its use or loss prevention becomes a matter of economic tradeoff. The water quantities we will present will be characterized as reasonable bounds for best available technology, with no effort to carry out detailed cost estimating of the type done for cooling towers.

7.2 Coal and Shale Mining Rates

Before estimating the water quantities associated with the mining operations it is necessary to know the rate at which the coal is mined to feed the unit size plants examined in this study. Here it is important to recognize

that the tonnage mined is not necessarily that which enters the process. For example, coal which is mined underground must be washed and approximately 25% is disposed of as refuse. In the Lurgi process the gasifier cannot accept coal fines, although the boilers can, the result being that about 10% of the mined coal is sold off as fines.

Basically the quantity of coal required is determined by the heat input rate for the size plant considered and the heating value of the fuel. For a Lurgi 250 x 10^6 scf per stream day plant the process needs from Section 2.4 are 17.7 x 10^9 Btu/hr, and the mine requirements are 19.67 x 10^9 Btu/hr as detailed in Table 7.1. From Section 2.5, the Synthane requirement is 17.1 x 10^9 Btu/hr, to which we add about 0.35% of additional heat input to cover undefined losses, for a total input of 17.7 x 10^9 Btu/hr.

Table 7-1. Process heat requirements for 250 x 10^6 scf/stream day Lurgi plant.

	10^9 Btu/hr
Gasifier	14.6
Boilers	2.6
Subtotal	17.2
Undefined losses (0.3%)	0.5
Total to process	17.7
Fines (10% mined coal)	1.97
Total from mine	19.67

Finally a 3,000 MWe plant at full load and 35% efficiency requires a heat input of 29.3 x 10^9 Btu/hr. All of those requirements are summarized in Table 7-2, where if no distinction is made between process and mine, the

requirements are the same. Knowing the higher heating value of the coal (see Appendix A) it is then a simple matter using the values in Table 7-2 to determine the daily tonnage requirements.

Table 7-2. Mine and process requirements for coal conversion plants.

Process	Nominal Output	10^{11} Btu per stream day	10^{11} Btu per calendar day	Load Factor
Lurgi	250×10^6 scf/day			
Mine		4.72	4.25	0.9
Process		4.25	3.82	0.9
Synthane	250×10^6 scf/day	4.25	3.82	0.9
Synthoil	100,000 bbl/day	8.38	7.54	0.9
Steam-Electric	3,000 MWe			
Under. Mine		9.36	6.55	0.7
Surf. Mine & Process		7.02	4.91	0.7

In the case of shale requirements, we must refer specifically to the process and the kerogen content of the shale. From Section 3.2 we note that for 35 gallon/ton shale that 66,000 tons per stream day (59,400 tons per calendar day) are required for the TOSCO II process. The tonnage requirements will vary essentially in direct proportion to the shale kerogen content. The coal slurry pipeline requirements are defined by the transport requirement of 25×10^6 tons/year or 68,493 tons/calendar day. Of course, were ash removal practiced prior to transport then the quantity mined would differ from that transported. This, however, is not the case for present study in which it is Gillette coal to be piped (see Section 5).

Tables 7-3a and 7-3b summarize the coal and shale daily tonnage requirements derived, where appropriate, from Table 7-2 and the coal heating value.

Table 7-3a. Coal tonnage requirements for unit size plants in tons per calendar day.

	Beulah	Colstrip	Gillette	Navajo
Lurgi				
Mine	31,135	24,666	25,139	25,560
Process	28,021	22,200	22,625	23,004
Synthane	28,021	22,200	22,625	23,004
Synthoil	55,251	43,772	44,611	45,358
3,000 MWe	36,018	28,535	29,082	29,569
Slurry Pipeline	-	-	68,493	-

Table 7-3b. Coal and shale tonnage requirements for unit size plants in tons per calendar day.

	Kaiparowits	Rifle
3,000 MWe		
Mine	30,335	-
Process	22,751	-
1,000 MWe	-	6,296
Oil Shale (50,000 bbl/day)	-	59,400

7.3 Road, Mine and Embankment Dust Control

In estimating the water requirements for this category of dust control we must distinguish between surface and underground mines. Let us first consider surface mines which cover the majority of situations of interest in the present study. The dust control we speak of here is primarily the fugitive dust generated on haul roads and unpaved areas in the neighborhood of the mine such as the mine benches and overburden placement areas. To a large extent, the length of unpaved haul roads and mine bench areas will depend on the mine productivity, as measured by the amount of coal recoverable per unit area of stripped land. In Table 7-4 we have shown the coal yields per acre for the 5 sites considered in the present study where the coal will be strip-mined. The value at Gillette was arrived at by averaging the 92,000 ton/acre figure derivable from Ref. 1 and the 88,000 ton/acre figure derivable from the information in Ref. 2. The value for Beulah was derived from the data of Ref. 3, while that for Farmington was obtained from Ref. 4. In a book prepared by the National Academy of Sciences[5], coal yield figures are given for all of the areas considered. However, these values appear on average to be about a factor of 1.8 lower than those values obtained from the various environmental impact statements. We have therefore used the figures from Ref. 5 multiplied by a factor of 1.8 to derive the values for Colstrip and Rifle, for which detailed statements were not available.

Table 7-4. Coal yields per acre.

Mine Location	tons/acre
Beulah	25,000
Colstrip	40,000
Gillette	90,000
Navajo	37,000
Rifle	23,000

In our assumed mine model we have estimated that the mining of 100 acres per year would require 2 miles of 45 ft wide unpaved haul roads to serve as spurs to conveyor belts that would feed the coal to the plant. Such a belt line operation may be found described in Ref. 1. In addition, we assume the bench area acreage that would have to be wet down to be approximately equal to 4 times the daily acreage that is mined. The sum of the two unpaved areas determines the area on which dust control must be practiced.

The simplest means of holding down fugitive dust is to wet down the mine area and haul roads. We assume as a conservative estimate that the roads and mine area can be kept in a wetted condition through an annual deposition of water equal to the net annual evaporation rate. Any rainfall is taken to be an additional safety factor, and is not subtracted from the amount of water to be laid down, because how much of it is actually absorbed and how much runs off is variable. The annual pond evaporation rates for the areas examined are shown in Table 7-5 (see Appendix B).

Table 7-5. Annual pond evaporation rates.

Location	inches/year
Beulah	45
Colstrip	49
Gillette	54
Navajo	61
Rifle	45

We can now calculate the lay down rate from the relation

$$\text{lay down rate} = \text{disturbed area} \times \text{evaporation rate}. \tag{7.1}$$

For our assumed mine model, 522,937 ft^2 must be wetted down per 100 acres/year disturbed. In Table 7-6 is shown the acreage it would be necessary to strip mine yearly for the processes and sites considered. Using these average figures and the evaporation rates given in Table 7-5 we have calculated the required lay down water from Eq. (7.1). It is this quantity which is listed in the tables of Section 10 as the "Road, Mine, Embankment Dust Control" water. The exceptions to this are the Kaiparowits coal mines and the Rifle oil shale mines, both of which are underground mines. The dust control requirements for these mines are very different from a surface mine. Moreover, we would note that the actual acreage disturbed per year by an underground mine is relatively small.

Table 7-6. Area strip mined annually in acres per year.*

	Beulah	Colstrip	Gillette	Navajo
Lurgi	454	225	102	252
Synthane	409	203	92	227
Synthoil	806	400	181	448
3,000 MWe	526	261	118	292

* 102 acres/yr for 1,000 MWe plant at Rifle and 278 acres/yr for slurry pipeline at Gillette.

In Ref. 6 the shale mine dust suppression water consumed is given as 350 gal per stream minute. The mining technique projected is underground room and pillar mining. This is one of the methods envisaged in Ref. 7 for underground coal mining at Kaiparowits. On the basis of 66,000 tons per stream day of shale mined, this amounts to 1 lb of water for every 31 lbs of as-mined shale. On the basis of other estimates for mine dust suppression water, this value

seems quite reasonable and we have used it to calculate the mine dust control water for oil shale mining.

Somewhat less reasonable is the net consumed water for mine dust suppression indicated in Ref. 7 for Kaiparowits. On the basis of a net consumption of 621 gallons per calendar minute and a mining of 32,973 tons of coal per calendar day a usage is indicated of 1 lb of water for each 9 lbs of as-mined coal. If we assume this to include water for crusher dust suppression, which generally takes place at the mine mouth, then we may compare this with 1 lb of water for each 19 lbs of as-mined shale[6]. The value of water usage indicated for Kaiparowits appears to be quite high and we have chosen to use a combined value for mining and crushing at Kaiparowits which is about 50% larger than that for the shale case or 1 lb of water for every 13 lbs of as-mined coal. The values of mine water consumption listed in the Rifle shale tables and Kaiparowits coal table are based on the usages indicated and the tonnages given in Table 7-3b.

7.4 Handling and Crushing Dust Control

We consider the water needs associated with the preparation of the coal or shale as part of the estimate of the water requirements for a mining operation integrated with a synthetic fuel plant or a steam-electric power plant. In all coal preparation plants dust is generated in the stages of loading and unloading, breaking, conveying, crushing, general screening and storage. The water required to hold down this dust will be considered here. Coal washing will be treated separately in Section 7.9, because of the specialized nature of the process and because of the high consumptions involved.

The ways of preventing dust from becoming airborne are through the application of water sprays, the application of non-toxic chemicals, the use of dry or wet dust collectors and the use of either partial or total enclosure. We

shall assume that the principal dust generating sources will be enclosed and that where feasible air will be circulated and dry bag dust collection employed. Whenever coal pulverization is necessary we consider, as is normally the case, that this will be done under conditions of total enclosure with no fugitive dust or hold-down water requirements. We have seen in Section 5 that water is added in the milling of coal for slurrification, however, this is a requirement related to the slurrification itself. In inactive storage the use of water for holding down dust can be minimized by the use of non-toxic chemicals.

Despite the design precautions indicated, in large scale plants with many transfer points, tranfer belts, surge bins, storage silos and active storage sites it is necessary to employ water sprays to wet down the coal or shale. This is also generally necessary with breaking and primary crushing operations. An examination of the Wesco Lurgi plant design[4] and the TOSCO oil shale plant design[6] indicate that a consumptive use of 1 lb of water for every 50 lbs of coal handled and crushed is a reasonably conservative estimate. This estimate is essentially in agreement with the value derived from Ref. 6. Using the tonnage figures of Tables 7-3 leads to the rates of water consumption for handling and crushing given in the tables of Section 10.

7.5 Mine Personnel

A number of water requirements in the mine are a direct function of the number of people employed in the mine. One such obvious requirement is water for sanitary needs and potable usage. Of course, the number of personnel is related to the tonnage mined but the number will also depend on the mine type and location.

In Ref. 8 estimates are given of the number of personnel needed in model mines to strip 5×10^6 tons of coal per year. The locations considered, that are relevant for this study, are the Southwest, Montana, Wyoming and North Dakota. We have scaled up on a tonnage output basis, the number of personnel recommended for these model mines to the outputs of Lurgi plant mines proposed for Wyoming[1], North Dakota[3] and New Mexico[4], as well as to a straight mining facility proposed for Gillette[2]. The numbers of mining personnel recommended by the mining companies in the environmental impact statements were compared with those from the scaleup. In all cases the recommended numbers of mine personnel were remarkably close to 50% more than those derived from the model mines data. In this study we have used the data of Ref. 8 to compute the number of mine personnel. However, we have increased the requirements by 1.5 on the basis of the impact statements and on the assumption that a certain number of additional personnel will be required for the preparation facilities associated with the conversion plants.

In the absence of equivalent data on mine personnel for underground shale mining in Rifle and underground coal mining in Kaiparowits, we have found it necessary to rely on the figures given in Refs. 6 and 7. For the Kaiparowits case, the number of personnel was scaled downward from that given in Ref. 7 in proportion to the difference in tonnage outputs from the respective mines.

Tables 7-7 summarize the mine personnel requirements for the units of the present study.

Table 7-7a. Number of mine personnel for specific mines integrated with coal conversion plants and a slurry pipeline.

Process	Nominal Output	Beulah	Colstrip	Gillette	Navajo
Lurgi	250×10^6 scf/day	305	255	260	345
Synthane	250×10^6 scf/day	275	230	235	310
Synthoil	100,000 bbl/day	540	455	465	610
Steam-Electric	3,000 MWe	350	295	300	400
Slurry Pipeline	25×10^6 tons/yr	-	-	715	-

Table 7-7b. Number of mine personnel for an underground and surface mine integrated with a steam-electric plant and for an underground oil shale mine integrated with a shale oil plant.

Process	Nominal Output	Kaiparowits	Rifle
Steam-Electric	3,000 MWe	2,360	-
Steam-Electric	1,000 MWe	-	85
Oil Shale	50,000 bbl/day	-	400

7.6 Sanitary and Potable Water

Sanitary and potable water usage is directly proportional to the number of personnel. Our estimated usage figures per man-shift are given in Table 7-8. The higher usage figure is for those areas with the higher rates of evaporation minus precipitation.

Table 7-8. Sanitary and potable water usage per man-shift and percent of usage consumed.

Location	Usage (gal/man-shift)	Consumed (% of usage)
Beulah, Colstrip, Gillette	30	25
Kaiparowits, Navajo, Rifle	35	30

In our calculations we have assumed 5 shifts per week per man. The usage of water in gallons per calendar minute is therefore given by the relation

$$\frac{\text{gallons usage}}{\text{calendar min}} = \frac{5}{7} \times \frac{1 \text{ day}}{1440 \text{ min}} \times \frac{\text{gal}}{\text{man-shift}} \times \text{no. of men} \qquad (7.2)$$

No account has been taken of shortened shifts or vacation time so as to provide a conservative estimate.

The net consumption will be quite different from the usage, since we assume that the sanitary and potable water effluent will go through water treatment in order that it may be reused within the plant. In Table 7-8 we have given our estimates of appropriate water consumptions as a percentage of water usage. Again a somewhat higher figure has been indicated for those areas with higher rates of evaporation minus precipitation.

Using the mine personnel data given in Tables 7-7, and the usage figures in Table 7-8, the water usages can be calculated from Eq. (7.2). The results were always rounded to the nearest gallon per calendar minute. The net consumptions were then obtained by multiplying these rounded usage figures by the appropriate fraction given in Table 7-8. The calculated net consumptions were also rounded to the nearest gallon per calendar minute, and it is those figures which are given in the tables of Section 10 under the headings of "Sanitary & Potable Water."

We have calculated the quantities of sludge that would be generated in the recovery of the sanitary and potable waters, even though the quantities themselves are not large. A standard figure for suspended solids in sewage is 0.25 lb/(person)(day) for a usage of 100 gal/(person)(day)[9]. For our assumed usage of 30 gal/man-shift this would correspond to a suspended solids of .075 lb/man-shift. Under the assumption that the sludge from the water treatment plant is dewatered to 80% water this would mean a generation of 0.375 lb wet sludge per man-shift. Taking, as before, 5 shifts per week per man we find that <u>0.27 lb wet sludge is generated per man per calendar day</u>. This same figure was used for the 35 gal/man-shift consumption, since the higher usage is associated with greater net evaporation rather than increased suspended solids per man. The wet solid figures for mine sanitary and potable water in the tables of Section 10 were calculated using the preceding wet sludge figure and the mine personnel of Tables 7-7.

7.7 Service and Fire Water

The service water usage in the mine such as for equipment washing, maintenance, pump seals, etc., along with the fire water usage through evaporation loss is a difficult quantity to estimate. However, an analysis of a number of mine designs indicates that this usage, which is essentially non-recoverable, can be related to the usage (not consumption) of sanitary and potable water.

The estimated ratio for service to sanitary usage for a proposed 10×10^6 ton/yr surface mine near Gillette is about 1.6[10]. This same figure for the proposed Kaiparowits underground mine[7] is about 1.3, based on our estimated sanitary water usage. We have used our estimate of sanitary water usage, since Ref. 10 is in agreement with our estimate for their case, so that by so doing this enables us to provide the same relative comparison for the two sites. The two values are sufficiently close that we have taken their average and assumed that the service water usage for the mine is 1.5 times the sanitary water usage. Moreover, all of the water is taken to be consumed since recovery in the mine work areas would prove quite difficult. The values of fire and service water shown in the Tables of Section 10 were calculated using the sanitary water usages developed in the preceding section (but not tabulated).

7.8 Revegetation

As part of any reclamation of mined land in arid and semi-arid regions, there exists a potential requirement for supplemental irrigation water associated with the establishment of soil stabilizing plant cover on mine spoils. In Ref. 5 (p. 168) it is concluded that coal mined areas with greater than 10 inches of mean precipitation annually can be reclaimed without supplemental irrigation. Where there is less than 10 inches of annual rainfall, partially

reshaped coal mine spoils can be successfully revegetated with supplemental irrigation of about 10 inches during the first growing season, with no further requirement during subsequent growing seasons[11]. The establishment of plant growth on spent oil shale piles requires considerably more supplemental irrigation and this will be considered separately.

From the precipitation data given in Appendix B, it can be seen that of the sites considered the only ones with less than 10 inches of annual rainfall are Navajo and Kaiparowits. Strip mining is proposed only for the Navajo site so that it is only there that significant irrigation water is needed. However, some spoil revegetation will be necessary in Kaiparowits on the coarse waste piles.

The areas to be revegetated annually at the Navajo site correspond to the mining area rates listed in Table 7-6. In the proposed Kaiparowits design of Ref. 7 (p. I-196), which we here follow, it is estimated that the coarse waste dump would occupy an area of 550 acres over the 35 year life of the plant. Multiplying the average annual acreage rate by the ratio of the total refuse rate in our design (7,584 tpd, Table 7-36) to that in the design of Ref. 7 (8,219 tpd) gives an annual coarse waste spoil area of 14.5 acres/yr.

With the area to be revegetated annually known, the supplemental irrigation water expressed in gallons per calendar minute can be calculated from the relation

$$\text{Irr. Water}\left(\frac{\text{gal}}{\text{cal.min}}\right) = \text{Area}\left(\frac{\text{acres}}{\text{yr}}\right) \times 43{,}560\ \frac{\text{ft}^2}{\text{acre}} \times 10\ \text{in} \times \frac{1\ \text{ft}}{12\ \text{in}} \times 62.4\ \frac{\text{lbs}}{\text{ft}^3}$$

$$\times \frac{1\ \text{gal}}{8.33\ \text{lbs}} \times \frac{1\ \text{yr}}{365\ \text{days}} \times \frac{1\ \text{day}}{1440\ \text{min}}$$

$$= 0.517 \times \text{Area}\left(\frac{\text{acres}}{\text{yr}}\right) \qquad (7.3)$$

The "Revegetation" water requirements given in the Tables of Section 10 for Navajo and Kaiparowits were obtained from the above relation and the acreage rates noted.

We have based the irrigation requirements for spent shale pile revegation on an annual spoil area of 11.5 acres/yr for a 50,000 bbl/day plant, which is the estimated acreage requiring reclamation during the first ten years of operation[6]. After this period the annual acreage rate would rise. Estimates for the necessary irrigation water indicate that about 1 ft of water is required initially to leach out the salinity, and then an additional 1 ft/yr for from 2 to 5 years[6,12]. On a continuous annual basis we shall therefore consider a one time requirement of 6 ft of water. This is undoubtedly a conservative estimate. Replacing 10 inches by 6 ft in Eq. (7.3) we have

$$\text{Shale Irr. Water}\left(\frac{\text{gal}}{\text{cal. min}}\right) = 3.72 \times \text{Area}\left(\frac{\text{acres}}{\text{yr}}\right) \tag{7.4}$$

For a 50,000 bbl/day oil shale plant, this gives an average consumption of 43 gallons per calendar minute.

7.9 Coal Washing

Often times it may be desirable or necessary to upgrade run-of-mine coal by reducing the ash and sulfur levels through washing of the coal. For all of the surface mined coal at the sites studied this is not considered necessary. However, when coal is mined underground, as at Kaiparowits, coal washing is normally employed and we shall take this to be the case. The details of washeries can vary significantly, however, our estimate of water consumption will be a generalized one based on the quantities of solids handled and disposed, rather than on any specific design.

From Ref. 7 we find that for the Kaiparowits coal, about 53% of the refuse is coarse and the remainder is fine waste which ends up in the tailing ponds. It is the coarse reject for which the revegetation water requirement was calculated in the preceding section. The coarse reject amounts to 4,020 tons per calendar day. Little water is added to the coarse reject, generally not more than 10 wt. %, and this primarily to aid in dust control and the subsequent compaction. On the basis of 10 wt. % of water this amounts to 75 gallons/calendar minute.

The fine refuse leaving the washery amounts to 3,564 tons/calendar day. Consistent with our assumption throughout this study, we take the waste to be a well dewatered one of 40 wt. % solids. This concentration is somewhat higher than the more usual 30 to 35% but can be obtained without excessive difficulty[13]. Based on our assumed solids concentration, water enters the tailings pond at a rate of 1,005 gal/calendar min. We follow the design of Ref. 7 and take 58% of this water to be lost, so that the net consumption is 583 gal/calendar min. This is consistent with a reasonably designed tailings and clear waste overflow pond (Ref. 13, Chapter 17). Of the water lost, about 80% or 466 gal/calendar min is retained in the pond and the remaining 20% is evaporated. We have sized a tailings and clear water overflow pond and calculated the evaporation rate. We find the rate to be approximately consistent with that given in Ref. 7, where a 3 year filling is assumed. The evaporation rate could be reduced by assuming a 2 year filling, but we have chosen to use the figures given as conservative estimates.

References

1. Wyoming Coal Gas Co. and Rochelle Coal Co., "Applicant's Environmental Assessment for a Proposed Gasification Project in Campbell and Converse Counties, Wyoming," Prepared by SERNCO, October, 1974.

2. Geological Survey, "Proposed Plan of Mining and Reclamation - Cordero Mine, Sun Oil Co., Coal Lease W-8385, Campbell County, Wyoming," Final Environmental Statement No. 76-22, U.S. Dept. of the Interior, April 30, 1976.

3. North Dakota Gasification Project for ANG Coal Gasification Co., "Environmental Impact Report in Connection with Joint Application of Michigan Wisconsin Pipe Line Co. and ANG Coal Gasification Co. for a Certificate of Public Convenience and Necessity, Woodward-Clyde Consultants," Federal Power Commission Docket No. CP75-278, Vol. III, March 1975.

4. Batelle Columbus Laboratories, "Detailed Environmental Analysis Concerning a Proposed Gasification Plant for Transwestern Coal Gasification Co., Pacific Coal Gasification Co., Western Gasification and The Expansion of a Strip Mine Operation Near Burnham, New Mexico Owned and Operated by Utah International Inc.," Federal Power Commission, Feb. 1, 1973.

5. National Academy of Sciences, Rehabilitation Potential of Western Coal Lands, pp. 32, 33, Ballinger Publishing, Cambridge, Mass., 1974.

6. Colony Development Operation, "An Environmental Impact Analysis for a Shale Oil Complex at Parachute Creek, Colorado, Part 1 - Plant Complex and Service Corridor," Atlantic Richfield Co., Denver, Colorado, 1974.

7. Bureau of Land Management, "Final Environmental Impact Statement Proposed Kaiparowits Project," Chapter I, FES 76-12, U.S. Dept. of the Interior, March 3, 1976.

8. Bureau of Mines, "Cost Analyses of Model Mines for Strip Mining of Coal in the United States," Information Circular 8535, U.S. Dept. of the Interior, 1972.

9. Metcalf & Eddy, Inc., Wastewater Engineering, p. 581, McGraw-Hill, New York, 1972.

10. Atlantic Richfield Co., "Preliminary Environmental Impact Assessment for the Proposed Black Thunder Coal Mine, Campbell County, Wyoming," and "Revised Mining and Reclamation Plan for the Proposed Black Thunder Coal Mine," 1974. Also "Black Thunder Mine, 10 Million Ton Per Year Water Supply," (Personal Communication, Hugh W. Evans), Denver, Colorado, March 6, 1975.

11. Aldon, F. E., "Techniques for Establishing Native Plants on Coal Mine Spoils in New Mexico," in Proc. Third Symposium on Surface Mining and Reclamation, Vol. I, pp. 21.28, National Coal Association, Washington, D.C., 1975.

12. U.S. Dept. of the Interior, "Final Environmental Statement for the Prototype Oil Shale Leasing Program," Vol. I, U.S. Gov't. Printing Office, Washington, D.C., 1973.

13. Leonard, J. W., and Mitchell, D. R., Coal Preparation, Chapter 12, Am. Inst. of Mining, Metallurgical and Petroleum Engineers, New York, 1968.

8. EVAPORATION, SOLIDS DISPOSAL AND OTHER USES

8.1 Categories

In this section we examine the water requirements associated with those solids disposal problems not already considered. We will also determine the quantity of residuals to be disposed. Of particular concern are the disposal of bottom ash, fly ash and spent shale. Among the other uses of plant water not included in the process estimate but to be treated here are the water needs for dust control, service requirements, and sanitary and potable consumption. Finally, since all the water which is used in the mine and plant will generally have come from an onsite reservoir, and since it may have passed through settling basins, it is also necessary to calculate the evaporation losses from these holding areas. These losses are chargeable to the water requirements for the mine-plant complex.

8.2 Bottom Ash and Spent Shale Disposal

Ash will enter a furnace or gasifier in the coal or char. Some of it will leave as hot ash or slag from the bottom of the unit, and the remainder will leave as fly ash in the flue gases. The specific gasifier or furnace defines the temperature at which the hot bottom ash or slag is removed. This temperature is important to water consumption since the ash or slag is generally cooled down by quenching with water before disposal, mainly for reasons of safety. We will take the ash to be quenched down to a temperature somewhat below the boiling point of water, say around 200°F. In Table 8-1 we have listed our estimates of the temperature at which the bottom ash will be removed from the various processes or units. Also listed are the ash temperature drops on quenching (ΔT).

Table 8-1. Temperature of bottom ash on removal and ash temperature drop on quenching.

Process or Unit	Ash Removal Temperature, °F	Ash Temperature Drop on Quenching, °F
Lurgi Gasifier	1,000	800
Dry-Ash Furnace	1,200	1,000
Synthane Furnace	1,200	1,000
Synthoil Hydrogen Unit	1,500	1,300

The rate at which water is evaporated in cooling down the ash can be determined from the relation

$$\text{heat removed/time} = \text{specific heat} \times \text{temperature drop} \times \text{ash quenched/time}. \tag{8.1}$$

Dividing the heat removal rate by the heat of vaporization (1,000 Btu/lb) determines the evaporation rate. Based on the analysis of bituminous ash[1] we have estimated the ash specific heat to be 0.2 Btu/(lb)(°F). In terms of water evaporated we then rewrite Eq. (8.1) as

$$\text{Water Evaporated}\left(\frac{\text{gal}}{\text{cal. min}}\right) = 3.33 \times 10^{-5} \times \text{Bottom Ash}\left(\frac{\text{tons}}{\text{day}}\right) \times \Delta T(^{\circ}\text{F}). \tag{8.2}$$

In addition to the water evaporated, a certain amount of excess water must be added to the ash both for handling and ease of disposal. The weight of water remaining in the quenched ash is taken to be 30% of the ash weight (23 wt. %). An expression for the amount of this remaining water is given by

$$\text{Water in Quenched Ash}\left(\frac{\text{gal}}{\text{cal. min}}\right) = 0.3\ \frac{\text{lbs water}}{\text{lb ash}} \times \text{Bottom Ash}\left(\frac{\text{tons}}{\text{day}}\right)$$

$$\times\ 2000\ \frac{\text{lbs}}{\text{ton}} \times \frac{1\ \text{gal}}{8.33\ \text{lbs}} \times \frac{1\ \text{day}}{1440\ \text{min}}$$

$$= 5 \times 10^{-2} \times \text{Bottom Ash}\left(\frac{\text{tons}}{\text{day}}\right). \tag{8.3}$$

The two streams defined by Eqs. (8.2) and (8.3) are seen to be of the same order and the sum of them specifies the net water requirement for the bottom ash disposal. The water requirement is directly proportional to the ash removal rate which must be known.

To determine the bottom ash removal rate it is first necessary to calculate the total ash that will be removed. This quantity is simply the product of the percent ash, as defined for each coal in Appendix A, multiplied by the rate of coal input to the processes, as given in Tables 7-3. In the present study we have assumed the use of pulverized coal fired dry-ash furnaces, in which normally about 20% of the ash leaves as bottom ash and the remaining 80% leaves as fly ash[2]. The exception to this rule in the present study is when Navajo coal is used. In that case, Ref. 3 indicates that about 25% of the ash leaves as bottom ash with 75% leaving as fly ash. This may be a consequence of the high ash content of this particular coal. In the Synthane process the same breakdown is assumed, with the ash entering the furnaces in the char, which is recovered from the gasifier, rather than directly with the coal. In the Lurgi process, according to Table 7-1 the fraction of the process coal which is fed directly to the boilers is 2.6/7.9 or 15.1%. Of this fraction, the same split is again taken between the bottom ash and fly ash, as defined previously for the dry-ash furnaces. The remainder of the process coal comes out as bottom ash from the gasifier. In the Synthoil process all of the ash is assumed to come out as bottom ash in the hydrogen plant. In Table 8-2 we have summarized the various ash quantities calculated on the basis of the rules just given.

Table 8-2. Ash quantities in tons per day.

	Steam-Electric (3,000 MWe)*			Synthane (250 x 10^6 scf/day)		
Location	Bottom	Fly	Total	Bottom	Fly	Total
Beulah	535	2138	2673	416	1663	2079
Colstrip	555	2222	2777	432	1728	2160
Gillette	326	1303	1629	253	1014	1267
Kaiparowits	319	1274	1593	-	-	-
Navajo	1893	5677	7570	1472	4417	5889
Rifle*	76	302	378	-	-	-

* Except Rifle which is 1,000 MWe

	Lurgi (250 x 10^6 scf/day)				Synthoil (100,000 bbl/day)		
	Gasifier	Boiler					
Location	Bottom	Bottom	Fly	Total	Bottom	Fly	Total
Beulah	1765	63	251	2079	4100	-	4100
Colstrip	1833	65	262	2160	4259	-	4259
Gillette	1075	38	154	1267	2498	-	2498
Navajo	4999	223	667	5889	11100	-	11100

From Eqs. (8.2) and (8.3) and the data in Tables 8-1 and 8-2, we have evaluated the bottom ash water consumption quantities and solids disposal quantities given in the Tables of Section 10.

In Section 3.3 we have already discussed the spent shale disposal problem. Both the quantity of shale and shale moisturizing water were given in Fig. 3-1 and Table 3-1 for a 50,000 bbl/stream day output. It is these quantities, corrected for a 90% load factor, which are listed in the oil shale tables of Section 10.

8.3 Fly Ash and Shale Dust Disposal

In the present study we assume that dry electrostatic precipitators are used to remove the coal fly ash from the flue gas. In these precipitators the collected ash is discharged into storage hoppers by rapping. The removal process itself is dry but when the ash is withdrawn from the storage hoppers or silos this is usually done by screw conveyors, with the ash wet down by water sprays to prevent dusting and to make the handling easier. The water sprayed on the ash would normally be about 25% by weight of the ash, that is, 20 wt. % of the mixture. We have used this figure to determine the quantity of water leaving with the fly ash, the amount of fly ash itself having already been specified in Table 8-2.

A fine particulate removal process is also necessary in the TOSCO shale oil retorting, where shale dust must be removed from flue gases prior to their discharge into the atmosphere. In the TOSCO process wet venturi scrubbers are specified. Since this is part of the process design we must accept the penalties in water consumption inherent in these scrubbers. We would only note that the water which does leave with the scrubbed shale dust is mixed

with the moisturized spent shale. The scrubber sludge water therefore serves as part of the needed moisturizing water and, moreover, as we already discussed in Section 3.3, it then becomes permanently cemented into the spent shale and does not present a leaching problem. The quantities of water and sludge have already been given for a 50,000 bbl/day plant in the footnote of Table 3-1. The quantities listed in the shale tables of Section 10 have been appropriately corrected for the 90% load factor.

8.4 Plant Dust Control

Within the boundaries of any of the plants considered in the present study water will be needed for dust control at a certain number of points. These points are similar to those described for the mines in Section 7.4, namely transfer areas, active storage, surge bins, etc.

We may expect that somewhat less water would be required in the plants than in the mines, since many of the operations tend to be enclosed. On this basis we have assumed a consumptive use of one-third that applicable to the mine areas, specifically 1 lb of water for every 150 lbs of coal handled and transferred. We have compared this estimate with that deduced from the data of Ref. 4 and find it to be about one-half of the estimated value used there. The value noted has been used for all plants except the slurry pipeline and the oil shale plants, where we have used half the water, that is, 1 lb of water for every 300 lbs of coal or shale handled. This is because in the shale plants part of the dust control water has already been accounted for in the usage calculated in Section 7.4. In the case of the slurry pipeline, the coal is normally wet during much of the processing so that we can expect less dust control water to be needed.

8.5 Plant Personnel

In the plant, as in the mine (see Section 7.5), a certain number of water requirements depend directly on the number of people employed. Determining these numbers is difficult and we have relied upon the estimates of the companies proposing to set up plants. In the cases where there are no estimates we have extrapolated from similar plants. There is no reason to expect significant variations in the numbers of people employed at a given type of plant as a function of geographical location. Clearly, the largest single influencing factor is the plant output.

In Table 8-3 we have listed the number of plant personnel, valid for all of the plant-site combinations considered in this study. The figure for the 3,000 MWe steam-electric plant has essentially been taken from Ref. 4. The number of people for the 1,000 MWe plant has been reduced in proportion but with 10% more people to account for the inefficiency of a smaller scale. The figure for the Lurgi plants represents a rounded average derived from the estimates given in Refs. 3, 5 and 6. We have used the same number of personnel for the Synthane plants as for the Lurgi plants, since the output and operations are similar. The number of personnel for the 50,000 bbl/day shale plant was taken directly from the estimates provided by the designers[7] For the 100,000 bbl/day plant this number was simply doubled, since the plant is essentially constituted of two 50,000 bbl/day units with little economy of scale. The output from the Synthoil plant is the same as the larger oil shale plant and many of the operations are similar to those carried out in the shale oil upgrading. However, the material tonnage which must be taken in and handled is less than half that of the shale plant, the solids to be disposed of

are only a small fraction of the spent shale, and finally some economy of scale is expected because of the unitary design. An analysis of these factors indicates that about 30% fewer personnel than in the larger shale plant could be expected.

Table 8-3. Plant personnel at all sites.

Plant	Output	Personnel
Lurgi & Synthane	250 x 10^6 scf/day	650
Synthoil	100,000 bbl/day	1,150
Steam-Electric	3,000 MWe	500
	1,000 MWe	185
Oil Shale	50,000 bbl/day	820
	100,000 bbl/day	1,640

8.6 Plant Sanitary and Potable Water

The calculation of the plant sanitary and potable water usage, consumption and solids residuals is exactly the same as for the mine. It is described completely in Section 7.6 and will not be repeated here. The only information needed is the number of plant personnel and that is given in the preceding section in Table 8-3.

8.7 Plant Service and Fire Water

As in the mine (see Section 7.7), a certain amount of water is required in the plant for various service functions. We shall again assume that the service water usage is related to the sanitary water usage. The rationale, as for the mine, is that the larger the service functions the larger the number

of personnel and sanitary usage. In general, more water will be needed for the plant than for the mine service facilities, so that we have assumed the service water usage for the plant is 2 times the sanitary water usage.

Unlike the mine case, some of the plant service water will be recoverable after use. We assume that 1/3 of the service water used is consumed and 2/3 is recovered after treatment. The used service water that is treated will be considered to be a low to medium strength waste[9], containing about 300 ppm of suspended solids which are removed in the treatment prior to the reuse of the water. As in Section 7.6, the sludge from the water treatment plant is assumed to be dewatered to 80% water. The wet sludge weight which must be disposed of daily is then given by the relation

$$\text{Wet Sludge}\left(\frac{\text{tons}}{\text{day}}\right) = \frac{300 \text{ lbs solids}}{10^6 \text{ lbs water}} \times \frac{5 \text{ lbs sludge}}{\text{lb solid}} \times 8.33 \frac{\text{lbs water}}{\text{gal}} \times \frac{1 \text{ ton}}{2000 \text{ lbs}}$$

$$\times \left[\text{Water Usage-Water Consumed}\right]\left(\frac{\text{gal}}{\text{cal. min}}\right) \times 1440 \frac{\text{min}}{\text{day}}$$

$$= 6 \times 10^{-3} \times \text{Water Usage}\left(\frac{\text{gal}}{\text{cal. min}}\right) . \qquad (8.4)$$

From the sanitary water usage the service water usage and consumption are readily determined; while the generated sludge, which is quite small, is calculable from Eq. (8.4) above. The site specific results are given in the tables of Section 10.

8.8 Settling Basin Evaporation

If the surface feed water is sufficiently dirty or turbid, it will generally be appropriate to employ settling basins at the supply source to settle out the suspended matter, prior to pumping the water to an on-site reservoir for plant and mine use. In any settling basin, water will be lost through evaporation and this loss is a penalty in water consumption chargeable against the mine-plant complex.

The quantity of water lost through evaporation will depend on the basin area and the net evaporation rate. The basin area is given by the relation

$$\text{Basin Area} = \frac{\text{Throughput x Settling Time}}{\text{Water Depth}} \tag{8.5}$$

In the present study we will assume that peak usage and surge periods can be accounted for by designing for a throughput which is 50% greater than the mean annual consumption. A conservative settling time to clarify a turbid surface stream, especially where a precipitant such as lime is used, may be taken to be 24 hours. Finally, we choose the settling basin water depth to be 3 ft, which is a generally accepted value. Using these values Eq. (8.5) can be written

$$\begin{aligned}\text{Basin Area } (\text{ft}^2) &= 1.5 \times \text{Consumption}\left(\frac{\text{gal}}{\text{cal. min}}\right) \times \frac{1 \text{ day}}{3 \text{ ft.}} \times 8.33 \frac{\text{lbs}}{\text{gal}} \\ &\quad \times \frac{1 \text{ ft}^3}{62.4 \text{ lbs}} \times 1440 \frac{\text{min}}{\text{day}} \\ &= 96.1 \times \text{Consumption}\left(\frac{\text{gal}}{\text{cal. min}}\right) .\end{aligned} \tag{8.6}$$

With the basin area determined, the quantity evaporated in gal/calendar minute is given by the relation

$$\begin{aligned}\text{Quantity Evaporated}\left(\frac{\text{gal}}{\text{cal. min}}\right) &= \text{Basin Area}(\text{ft}^2) \times \text{Net Evaporation Rate}\left(\frac{\text{in}}{\text{yr}}\right) \\ &\quad \times \frac{1 \text{ ft}}{12 \text{ in}} \times 62.4 \frac{\text{lbs water}}{\text{ft}^3} \times \frac{1 \text{ gal}}{8.33 \text{ lbs}} \\ &\quad \times \frac{1 \text{ yr}}{365 \text{ days}} \times \frac{1 \text{ day}}{1440 \text{ min}} \\ &= 1.19 \times 10^{-6} \times \text{Basin Area}(\text{ft}^2) \times \text{Net Evaporation Rate}\left(\frac{\text{in}}{\text{yr}}\right) .\end{aligned} \tag{8.7}$$

In Table 8-4 are summarized the pond evaporation rates minus the annual precipitation for the sites of the present study. Also tabulated is the net evaporation rate assuming some form of evaporation control such as the application of monomolecular films to the water surface. This control may also be a natural one resulting from the presence of impurities in the local waters. Experience indicates that a reasonable maximum value to take for the effective reduction in the evaporation minus precipitation rate is 25%[10]. Also shown in Table 8-4 are the sites at which settling basins would be used based on the feed water suspended solids concentrations given in Appendix B.

Table 8-4. Evaporation rates without and with evaporation control and need for settling basin.

Location	Pond Evap.-Precip. (in/yr)	Net Evap. (in/yr)	Settling Basin Need
Beulah	30	23	No
Colstrip	35	26	Yes
Gillette	40	40	Yes
Kaiparowits	61	46	No
Navajo	53	40	Yes
Rifle	33	25	Yes*

* Except for 100,000 bbl/day oil shale plant where groundwater is used.

The calculation of the basin area cannot of course be carried out until all the consumption figures are known. The calculation generally involves one iteration, in that it is necessary to assume a figure for the evaporation losses in the basin and the reservoir (see next section) to determine the throughput. A loss rate from these sources is then determined and the result is iterated. One iteration is usually sufficient.

8.9 Reservoir Evaporation

In this study we have assumed that the clarified feed water is pumped to an on-site reservoir where it is stored prior to use. To determine the reservoir size, a one week supply for the mine and plant is assumed to be held in storage. As a reservoir depth we take 21 ft. In that case it can be seen that the storage time per unit water height (3 days/21 ft) is the same as was chosen for the settling basin so that the reservoir is given by the same expression as Eq. (8.6), that is,

$$\text{Reservoir Area}(\text{ft}^2) = 96.1 \times \text{Consumption}\left(\frac{\text{gal}}{\text{cal. min}}\right) \qquad (8.8)$$

Similarly, the net evaporation rate is given by Eq. (8.7) with the basin area understood to be replaced by the reservoir area.

For the reservoir characteristics chosen, it follows that in those cases where both a settling basin and a reservoir are required that the quantities evaporated will be the same. This simplifies somewhat the iterative calculation necessary to determine the losses that was described in the last section. The results based on Eqs. (8.6) to (8.8) and the rates given in Table 8-4 are summarized in the tables of Section 10.

References

1. Hendrickson, T.A. (editor), Synthetic Fuels Data Handbook, Cameron Engineers, Inc., Denver, Colorado, 1975.

2. Babcok & Wilcox, Steam - Its Generation and Use, 38th Edition, Revised, pp. 18-1 ff., Babcok & Wilcox Co., New York, 1975.

3. Batelle Columbus Laboratories, "Detailed Environmental Analysis Concerning a Proposed Gasification Plant for Transwestern Coal Gasification Co., Pacific Coal Gasification Co., Western Gasification and The Expansion of a Strip Mine Operation Near Burnham, New Mexico Owned and Operated by Utah International Inc.," Federal Power Commission, Feb. 1, 1973.

4. Bureau of Land Management, "Final Environmental Impact Statement Proposed Kaiparowits Project," Chapter I, FES 76-12, U.S. Dept. of the Interior, March 3, 1976.

5. North Dakota Gasification Project for ANG Coal Gasification Co., "Environmental Impact Report in Connection with Joint Application of Michigan Wisconsin Pipe Line Co. and ANG Coal Gasification Co. for a Certificate of Public Convenience and Necessity," Woodward-Clyde Consultants, Federal Power Commission Docket No. CP75-278, Vol. III, March 1975.

6. Wyoming Coal Gas Co. and Rochelle Coal Co., "Applicant's Environmental Assessment for a Proposed Gasification Project in Campbell and Converse Counties, Wyoming," Prepared by SERNCO, October, 1974.

7. Colony Development Operation, "An Environmental Impact Analysis for a Shale Oil Complex at Parachute Creek, Colorado, Part 1 - Plant Complex and Service Corridor," Atlantic Richfield Company, Denver, Colorado, 1974.

8. Energy Transportation Systems, Inc., Unpublished Document, Casper, Wyoming, Feb. 21, 1974. Summarized in memorandum of E. Rappaport, Radian Corp., Austin, Texas.

9. Metcalf & Eddy, Inc., Wastewater Engineering, p. 231, McGraw-Hill, New York, 1972.

10. Office of Water Resources Research, "Evaporation Suppression, a Bibliography," WRSIC 73-216, Water Resources Scientific Information Center, U.S. Dept. of the Interior, Washington, D.C., 1973.

9. MUNICIPAL WATER REQUIREMENTS AND RESIDUALS

In this section we present a rough basis for the estimation of the net municipal water requirements associated with an increased population in the areas considered, resulting from the introduction of one or more of the mine-plant complexes. In presenting these estimates it is to be understood that we assume all sewage water effluent in any municipality will be treated to enable its reuse within the mine-plant boundaries.

In Table 9-1 are shown our estimates of municipal water requirements expressed on a gallons per capita per day basis. The total water requirements are rounded average estimates derived from Ref. 1. The reasons for the somewhat higher figures for Montana and Wyoming compared with, say, Colorado are not completely evident, since one might have expected the more arid region to have a somewhat higher usage. One explanation may be that these data were obtained from averaging in a considerable number of areas where there is a large water consumption for animals. It should be noted that in some instances, particularly in the case of Utah, the water consumption given in Table 9-1 is lower than that cited in Ref. 1. The reason for this is that for the municipalities to be associated with the mine-plant complexes, the water use will be principally for domestic, commercial and public consumption, with little requirement for the industrial portion of the total consumption that is normally taken into account in municipal usage. On the other hand, the Utah figure given in Ref. 1 averages in the relatively large industrial consumption associated with the Salt Lake region which encompasses the major portion of the state's usage.

Table 9-1. Municipal water requirements in gallons per capita per day.

State	Total	Consumed	Treated for Reuse
Montana, Wyoming	175	50	125
Colorado, New Mexico, Utah	150	60	90
North Dakota	100	30	70

For Montana, Wyoming and North Dakota the consumptive use was estimated at around 30%. The somewhat higher consumption of 40% was taken for Colorado, New Mexico and Utah because of the more arid nature of the areas and the concomitant higher rates of municipal consumption. The last column of Table 9-1 is the difference between the first two and represents that water which will be treated for reuse.

We may also estimate the quantity of wet sludge which must be disposed of after treatment for reuse (see also Section 7.6). A standard figure for suspended solids in sewage is 0.25 lb/capita/day (Ref. 1, p. 581). As in Section 7.6,we assume that any increased water usage above the average value of 100 gal/capita/day associated with this solids loading,does not increase the suspended solids effluent. Furthermore we consider, as elsewhere in this study, that the sludge from any water treatment plant is dewatered to 80% water (20% solids). This yields a sludge rate of 1.25 lbs of wet sludge per capita per day. Once the population figures are specified this figure would provide an estimate of the quantity of sludge to be disposed of daily.

Reference

1. Metcalf & Eddy, Inc., Wastewater Engineering, p. 25, McGraw-Hill, New York, 1972.

10. SITE-SPECIFIC RESULTS

The summary of the total water consumed and wet-solids residuals generated at each site and for each unit size mine-plant complex are given in Table 10-1. A detailed breakdown by water use category of the water consumption and residuals generated for each plant-site combination is presented in the tables following Table 10-1. Each calculated quantity has been derived in the preceding sections. The results are presented by site in alphabetical order and by process in the order shown in Table 10-1.

Table 10-1. Summary of total water consumed and residuals generated at each site.

FACILITY	BEULAH, NORTH DAKOTA	COLSTRIP, MONTANA	GILLETTE, WYOMING	KAIPAROWITS/ ESCALANTE UTAH	NAVAJO/ FARMINGTON NEW MEXICO	RIFLE, COLORADO
SLURRY PIPELINE (25 x 10^6 tons/yr @ 100% load factor)						
ACRE-FT/YR*			19,171			
WET SOLIDS† - 10^6 TONS/YR			-			
LURGI (250 x 10^6 scf/stream day @ 90% load factor)						
ACRE-FT/YR*	3,307	4,618	4,206		5,639	
WET SOLIDS† - 10^6 TONS/YR	1.20	1.27	0.72		3.00	
SYNTHANE (250 x 10^6 scf/stream day @ 90% load factor)						
ACRE-FT/YR*	7,671	7,808	7,776		8,670	
WET SOLIDS† - 10^6 TONS/YR	1.08	1.12	0.71		2.84	
SYNTHOIL (100,000 bbl/stream day @ 90% load factor)						
ACRE-FT/YR*	10,085	10,296	9,227		11,753	
WET SOLIDS† - 10^6 TONS/YR	2.00	2.07	1.23		5.31	
ELECTRICAL GENERATION (3,000 MWe @ 35% eff and 70% load factor)						
ACRE-FT/YR*	23,884	26,659	25,842	29,816	29,206	
WET SOLIDS† - 10^6 TONS/YR	2.65	3.01	1.32	5.30	5.00	
ELECTRICAL GENERATION (1,000 MWe @ 35% eff and 70% load factor)						
ACRE-FT/YR*						9,494
WET SOLIDS† - 10^6 TONS/YR						0.38
OIL SHALE (50,000 bbl/stream day @ 90% load factor)						
ACRE-FT/YR*						6,480
WET SOLIDS† - 10^6 TONS/YR						20.40
OIL SHALE (100,000 bbl/stream day @ 90% load factor)						
ACRE-FT/YR*						12,924
WET SOLIDS† - 10^6 TONS/YR						40.81

* Water Consumed
† Residuals

SITE BEULAH

PLANT TYPE Lurgi, 250 x 10^6 scf per stream day @ 90% load factor

	WATER CONSUMED			SOLIDS		
	GAL/C. MIN	ACRE-FT/YR	s, i, o	WET-SOLID TONS/C. DAY	DRY SOLID TONS/C. DAY	WATER IN SOLID GAL/C. MIN
PROCESS						
Net Water Consumed	(-477)	(-769)				
Condensate Treatment Sludge	16	26	o	120	24	16
Boiler Demineralizer Waste	2	3	s	27	14	2
SUBTOTAL	(-459)	(-740)		147	38	18
COOLING						
Evaporated	1,907	3,076				
Treatment Waste	2	3	s	18	9	1.5
	1	2	i	13	7	1.1
Drift & Leakage	54	87				
SUBTOTAL	1,964	3,168		31	16	2.6
FLUE GAS DESULFURIZATION	105	169		438	175	44
MINING						
Road, Mine, Embankment Dust Control	128	206				
Handling & Crushing Dust Control	104	168				
Service & Fire Water	8	13				
Sanitary & Potable Water	1	2	o	.04		
Revegetation	-	-				
Coal Washing	-	-				
SUBTOTAL	241	389	o	.04		
EVAPORATION, SOLIDS DISPOSAL & OTHERS						
Settling Basin Evaporation	-	-				
Reservoir Evaporation	5	8				
Bottom Ash Disposal	140	226	i	2,374	1,828	91
Fly Ash Disposal	10	16	i	311	251	10
Dust Control - Plant	35	57				
Service & Fire Water - Plant	7	11	o	.12		
Sanitary & Potable Water - Plant	2	3	o	.09		
SUBTOTAL	199	321		2,685	2,079	101
TOTAL	2,050	3,307		3,301	2,308	166

FOOTNOTES

s, primarily soluble inorganic waste

i, primarily insoluble inorganic waste

o, primarily insoluble organic waste

SITE BEULAH

PLANT TYPE Synthane, 250 x 10^6 scf per stream day @ 90% load factor

	WATER CONSUMED			SOLIDS		
	GAL/C. MIN	ACRE-FT/YR	s, i, o	WET-SOLID TONS/C. DAY	DRY SOLID TONS/C. DAY	WATER IN SOLID GAL/C. MIN
PROCESS						
Net Water Consumed	658	1,061				
Condensate Treatment Sludge	14	23	o	105	21	14
Boiler Demineralizer Waste	2	3	s	23	12	1.9
SUBTOTAL	674	1,087		128	33	16
COOLING						
Evaporated	3,084	4,974				
Treatment Waste	2	3	s	27	14	2.3
	2	3	i	24	12	2.0
Drift & Leakage	89	144				
SUBTOTAL	3,177	5,124		51	26	4.3
FLUE GAS DESULFURIZATION	532	858		170	68	17
MINING						
Road, Mine, Embankment Dust Control	116	187				
Handling & Crushing Dust Control	93	150				
Service & Fire Water	6	10				
Sanitary & Potable Water	1	2	o	.04		
Revegetation	-	-				
Coal Washing	-	-				
SUBTOTAL	216	349	o	.04		
EVAPORATION, SOLIDS DISPOSAL & OTHERS						
Settling Basin Evaporation	-					
Reservoir Evaporation	13	21				
Bottom Ash Disposal	35	57	i	542	416	21
Fly Ash Disposal	69	111	i	2,077	1,663	69
Dust Control - Plant	31	50				
Service & Fire Water - Plant	7	11	o	.12		
Sanitary & Potable Water - Plant	2	3	o	.09		
SUBTOTAL	157	253		2,619	2,079	90
TOTAL	4,756	7,671		2,968	2,206	127

FOOTNOTES

s, primarily soluble inorganic waste

i, primarily insoluble inorganic waste

o, primarily insoluble organic waste

SITE BEULAH

PLANT TYPE Syntholl, 100,000 bbl per stream day @ 90% load factor

	WATER CONSUMED			SOLIDS		
	GAL/C. MIN	ACRE-FT/YR	s, i, o	WET-SOLID TONS/C. DAY	DRY SOLID TONS/C. DAY	WATER IN SOLID GAL/C. MIN
PROCESS						
Net Water Consumed	(-72)	(-116)				
Condensate Treatment Sludge	12	19	o	89	18	12
Boiler Demineralizer Waste	1	1.6	s	8	4	0.7
SUBTOTAL	(-59)	(-95)		97	22	13
COOLING						
Evaporated	5,254	8,475				
Treatment Waste	2	3	s	20	10	1.7
	4	6	i	46	23	3.9
Drift & Leakage	152	245				
SUBTOTAL	5,412	8,729		66	33	5.6
FLUE GAS DESULFURIZATION	-	-				-
MINING						
Road, Mine, Embankment Dust Control	228	368				
Handling & Crushing Dust Control	184	297				
Service & Fire Water	12	19				
Sanitary & Potable Water	2	3	o	.07		
Revegetation	-	-				
Coal Washing	-	-				
SUBTOTAL	426	687	o	.07		
EVAPORATION, SOLIDS DISPOSAL & OTHERS						
Settling Basin Evaporation	-	-				
Reservoir Evaporation	16	26				
Bottom Ash Disposal	382	616	i	5,330	4,100	205
Fly Ash Disposal	-	-		-	-	-
Dust Control - Plant	61	98				
Service & Fire Water - Plant	11	18	o	.20		
Sanitary & Potable Water - Plant	4	6	o	.15		
SUBTOTAL	474	764		5,330	4,100	205
TOTAL	6,253	10,085		5,493	4,155	224

FOOTNOTES

s, primarily soluble inorganic waste

i, primarily insoluble inorganic waste

o, primarily insoluble organic waste

SITE BEULAH

PLANT TYPE 3,000 MWe @ 35% eff. and 70% load factor

	WATER CONSUMED			SOLIDS		
	GAL/C. MIN	ACRE-FT/YR	s, i, o	WET-SOLID TONS/C. DAY	DRY SOLID TONS/C. DAY	WATER IN SOLID GAL/C. MIN
PROCESS						
Net Water Consumed						
Condensate Treatment Sludge						
Boiler Demineralizer Waste	0.1	0.2	s	1.7	0.9	0.1
SUBTOTAL	0.1	0.2		1.7	0.9	0.1
COOLING						
Evaporated	13,360	21,550				
Treatment Waste	17	27	i	169	67	17
Drift & Leakage	36	58				
SUBTOTAL	13,413	21,635		169	67	17
FLUE GAS DESULFURIZATION	896	1,445		3,720	1,488	372
MINING						
Road, Mine, Embankment Dust Control	149	240				
Handling & Crushing Dust Control	120	194				
Service & Fire Water	8	13				
Sanitary & Potable Water	1	2	o	.05		
Revegetation	-	-				
Coal Washing	-	-				
SUBTOTAL	278	449	o	.05		
EVAPORATION, SOLIDS DISPOSAL & OTHERS						
Settling Basin Evaporation	-	-				
Reservoir Evaporation	39	63				
Bottom Ash Disposal	45	72.5	i	697	535	27
Fly Ash Disposal	89	143.5	i	2,672	2,138	89
Dust Control - Plant	40	65				
Service & Fire Water - Plant	5	8	o	.08		
Sanitary & Potable Water - Plant	2	3	o	.07		
SUBTOTAL	220	355		3,369	2,673	116
TOTAL	14,807	23,884		7,260	4,229	505

FOOTNOTES

s, primarily soluble inorganic waste

i, primarily insoluble inorganic waste

o, primarily insoluble organic waste

SITE COLSTRIP

PLANT TYPE Lurgi, 250 x 10^6 scf per stream day @ 90% load factor

	WATER CONSUMED			SOLIDS		
	GAL/C. MIN	ACRE-FT/YR	s, i, o	WET-SOLID TONS/C. DAY	DRY SOLID TONS/C. DAY	WATER IN SOLID GAL/C. MIN
PROCESS						
Net Water Consumed	183	295				
Condensate Treatment Sludge	12	20	o	89	18	12
Boiler Demineralizer Waste	2	3	s	24	12	2
SUBTOTAL	197	318		113	30	14
COOLING						
Evaporated	2,004	3,232				
Treatment Waste	2	3	s	19	10	1.6
	1	1.6	i	14	7	1.2
Drift & Leakage	57	92				
SUBTOTAL	2,064	3,329		33	17	2.8
FLUE GAS DESULFURIZATION	233	376		540	216	54
MINING						
Road, Mine, Embankment Dust Control	69	111				
Handling & Crushing Dust Control	82	132				
Service & Fire Water	6	10				
Sanitary & Potable Water	1	2	o	.04		
Revegetation	–	–				
Coal Washing	–	–				
SUBTOTAL	158	255	o	.04		
EVAPORATION, SOLIDS DISPOSAL & OTHERS						
Settling Basin Evaporation	9	14.5				
Reservoir Evaporation	9	14.5				
Bottom Ash Disposal	146	235	i	2,470	1,900	95
Fly Ash Disposal	11	18	i	326	260	11
Dust Control - Plant	27	44				
Service & Fire Water - Plant	7	11	o	.12		
Sanitary & Potable Water - Plant	2	3	o	.09		
SUBTOTAL	211	340		2,796	2,160	106
TOTAL	2,863	4,618		3,482	2,423	177

FOOTNOTES

s, primarily soluble inorganic waste

i, primarily insoluble inorganic waste

o, primarily insoluble organic waste

SITE COLSTRIP

PLANT TYPE Synthane, 250 x 10^6 scf per stream day @ 90% load factor

	WATER CONSUMED			SOLIDS		
	GAL/C. MIN	ACRE-FT/YR	s, i, o	WET-SOLID TONS/C. DAY	DRY SOLID TONS/C. DAY	WATER IN SOLID GAL/C. MIN
PROCESS						
Net Water Consumed	658	1,061				
Condensate Treatment Sludge	14	23	o	105	21	14
Boiler Demineralizer Waste	2	3	s	22	11	1.8
SUBTOTAL	674	1,087		127	32	16
COOLING						
Evaporated	3,240	5,226				
Treatment Waste	2	3	s	27	14	2.3
	2	3	i	24	12	2
Drift & Leakage	93	150				
SUBTOTAL	3,337	5,382		51	26	4.3
FLUE GAS DESULFURIZATION	517	834		170	68	17
MINING						
Road, Mine, Embankment Dust Control	63	102				
Handling & Crushing Dust Control	74	119				
Service & Fire Water	5	8				
Sanitary & Potable Water	1	2	o	.03		
Revegetation	–	–				
Coal Washing	–	–				
SUBTOTAL	143	231		.03		
EVAPORATION, SOLIDS DISPOSAL & OTHERS						
Settling Basin Evaporation	14	23				
Reservoir Evaporation	14	23				
Bottom Ash Disposal	36	58	i	564	432	22
Fly Ash Disposal	72	116	i	2,160	1,728	72
Dust Control - Plant	25	40				
Service & Fire Water - Plant	7	11	o	.12		
Sanitary & Potable Water - Plant	2	3	o	.09		
SUBTOTAL	170	274		2,724	2,160	94
TOTAL	4,841	7,808		3,072	2,286	131

FOOTNOTES

s, primarily soluble inorganic waste

i, primarily insoluble inorganic waste

o, primarily insoluble organic waste

SITE COLSTRIP

PLANT TYPE Synthoil, 100,000 bbl per stream day @ 90% load factor

	WATER CONSUMED			SOLIDS		
	GAL/C. MIN	ACRE-FT/YR	s, i, o	WET-SOLID TONS/C. DAY	DRY SOLID TONS/C. DAY	WATER IN SOLID GAL/C. MIN
PROCESS						
Net Water Consumed	526	848				
Condensate Treatment Sludge	9	15	o	67	13	9
Boiler Demineralizer Waste	1	1.6	s	8	4	0.6
SUBTOTAL	536	865		75	17	10
COOLING						
Evaporated	4,919	7,934				
Treatment Waste	1	1.4	s	16	8	1.3
	3	5	i	40	20	3.3
Drift & Leakage	143	231				
SUBTOTAL	5,066	8,171		56	28	4.6
FLUE GAS DESULFURIZATION	-					
MINING						
Road, Mine, Embankment Dust Control	123	198				
Handling & Crushing Dust Control	146	236				
Service & Fire Water	11	18				
Sanitary & Potable Water	2	3	o	.06		
Revegetation	-	-				
Coal Washing	-	-				
SUBTOTAL	282	455	o	.06		
EVAPORATION, SOLIDS DISPOSAL & OTHERS						
Settling Basin Evaporation	19	31				
Reservoir Evaporation	19	31				
Bottom Ash Disposal	397	640	i	5,537	4,259	213
Fly Ash Disposal	-	-				-
Dust Control - Plant	49	79				
Service & Fire Water - Plant	11	18	o	.20		
Sanitary & Potable Water - Plant	4	6	o	.15		
SUBTOTAL	499	805		5,537	4,259	213
TOTAL	6,383	10,296		5,668	4,304	228

FOOTNOTES

s, primarily soluble inorganic waste

i, primarily insoluble inorganic waste

o, primarily insoluble organic waste

SITE COLSTRIP

PLANT TYPE 3,000 MWe @ 35% eff. and 70% load factor

	WATER CONSUMED			SOLIDS		
	GAL/C. MIN	ACRE-FT/YR	s, i, o	WET-SOLID TONS/C. DAY	DRY SOLID TONS/C. DAY	WATER IN SOLID GAL/C. MIN
PROCESS						
Net Water Consumed						
Condensate Treatment Sludge						
Boiler Demineralizer Waste	0.1	0.2	s	1.6	0.8	0.1
SUBTOTAL	0.1	0.2		1.6	0.8	0.1
COOLING						
Evaporated	14,040	22,646				
Treatment Waste	15	24	i	152	61	15
Drift & Leakage	38	62				
SUBTOTAL	14,093	22,732		152	61	15
FLUE GAS DESULFURIZATION	1,975	3,186		4,588	1,835	459
MINING						
Road, Mine, Embankment Dust Control	81	131				
Handling & Crushing Dust Control	95	153				
Service & Fire Water	6	10				
Sanitary & Potable Water	1	2	o	.04		
Revegetation	-	-				
Coal Washing	-	-				
SUBTOTAL	183	296	o	.04		
EVAPORATION, SOLIDS DISPOSAL & OTHERS						
Settling Basin Evaporation	49	79				
Reservoir Evaporation	49	79				
Bottom Ash Disposal	46	74	i	723	555	28
Fly Ash Disposal	93	150	i	2,780	2,222	93
Dust Control - Plant	32	52				
Service & Fire Water - Plant	5	8	o	.08		
Sanitary & Potable Water - Plant	2	3	o	.07		
SUBTOTAL	276	445		3,503	2,777	121
TOTAL	16,527	26,659		8,245	4,674	595

FOOTNOTES

s, primarily soluble inorganic waste

i, primarily insoluble inorganic waste

o, primarily insoluble organic waste

SITE GILLETTE

PLANT TYPE Slurry Pipeline, 250 x 10^6 tons/yr @ 100% load facto

	WATER CONSUMED			SOLIDS		
	GAL/C. MIN	ACRE-FT/YR	s, i, o	WET-SOLID TONS/C. DAY	DRY SOLID TONS/C. DAY	WATER IN SOLID GAL/C. MIN
PROCESS						
Net Water Consumed	11,420	18,420				
Condensate Treatment Sludge	-	-				
Boiler Demineralizer Waste	-	-				
SUBTOTAL	11,420	18,420				
COOLING						
Evaporated	-	-				
Treatment Waste	-	-				
Drift & Leakage	-	-				
SUBTOTAL	-	-				
FLUE GAS DESULFURIZATION	-	-				
MINING						
Road, Mine, Embankment Dust Control	95	153				
Handling & Crushing Dust Control	228	368				
Service & Fire Water	17	27				
Sanitary & Potable Water	3	5	o	.10		
Revegetation	-	-				
Coal Washing	-	-				
SUBTOTAL	343	553	o	.10		
EVAPORATION, SOLIDS DISPOSAL & OTHERS						
Settling Basin Evaporation	41	66				
Reservoir Evaporation	41	66				
Bottom Ash Disposal	-	-				
Fly Ash Disposal	-	-				
Dust Control - Plant	38	61				
Service & Fire Water - Plant	2	3	o	.04		
Sanitary & Potable Water - Plant	1	2	o	.03		
SUBTOTAL	123	198				
TOTAL	11,886	19,171		.17		

FOOTNOTES

s, primarily soluble inorganic waste

i, primarily insoluble inorganic waste

o, primarily insoluble organic waste

SITE GILLETTE

PLANT TYPE Lurgi, 250 x 10^6 scf per stream day @ 90% load factor

	WATER CONSUMED			SOLIDS		
	GAL/C. MIN	ACRE-FT/YR	s, i, o	WET-SOLID TONS/C. DAY	DRY SOLID TONS/C. DAY	WATER IN SOLID GAL/C. MIN
PROCESS						
Net Water Consumed	38	61				
Condensate Treatment Sludge	13	21	o	100	20	13
Boiler Demineralizer Waste	2	3	s	26	13	2
SUBTOTAL	53	85		126	33	15
COOLING						
Evaporated	2,044	3,297				
Treatment Waste	2	3	s	20	10	1.6
	1	1.6	i	14	7	1.2
Drift & Leakage	58	93				
SUBTOTAL	2,105	3,395		34	17	2.8
FLUE GAS DESULFURIZATION	178	287		163	65	16
MINING						
Road, Mine, Embankment Dust Control	34	55				
Handling & Crushing Dust Control	84	135				
Service & Fire Water	6	10				
Sanitary & Potable Water	1	2	o	.04		
Revegetation	-	-				
Coal Washing	-	-				
SUBTOTAL	125	202	o	.04		
EVAPORATION, SOLIDS DISPOSAL & OTHERS						
Settling Basin Evaporation	9	14.5				
Reservoir Evaporation	9	14.5				
Bottom Ash Disposal	86	139	i	1,449	1,113	56
Fly Ash Disposal	6	10	i	190	154	6
Dust Control - Plant	28	45				
Service & Fire Water - Plant	7	11	o	.12		
Sanitary & Potable Water - Plant	2	3	o	.09		
SUBTOTAL	147	237		1,639	1,267	62
TOTAL	2,608	4,206		1,962	1,382	96

FOOTNOTES

s, primarily soluble inorganic waste

i, primarily insoluble inorganic waste

o, primarily insoluble organic waste

SITE GILLETTE

PLANT TYPE Synthane, 250 x 10^6 scf per stream day @ 90% load factor

	WATER CONSUMED			SOLIDS		
	GAL/C. MIN	ACRE-FT/YR	s, i, o	WET-SOLID TONS/C. DAY	DRY SOLID TONS/C. DAY	WATER IN SOLID GAL/C. MIN
PROCESS						
Net Water Consumed	658	1,061				
Condensate Treatment Sludge	14	23	o	105	21	14
Boiler Demineralizer Waste	2	3	s	23	11	1.9
SUBTOTAL	674	1,087		128	32	16
COOLING						
Evaporated	3,266	5,268				
Treatment Waste	2	3	s	28	14	2.3
	2	3	i	24	12	2
Drift & Leakage	94	152				
SUBTOTAL	3,364	5,426		52	26	4.3
FLUE GAS DESULFURIZATION	532	858		170	68	17
MINING						
Road, Mine, Embankment Dust Control	31	50				
Handling & Crushing Dust Control	75	121				
Service & Fire Water	6	10				
Sanitary & Potable Water	1	2	o	.03		
Revegetation	-	-				
Coal Washing	-	-				
SUBTOTAL	113	183	o	.03		
EVAPORATION, SOLIDS DISPOSAL & OTHERS						
Settling Basin Evaporation	17	27.5				
Reservoir Evaporation	17	27.5				
Bottom Ash Disposal	28	45	i	331	253	13
Fly Ash Disposal	42	68	i	1,266	1,014	42
Dust Control - Plant	25	40				
Service & Fire Water - Plant	7	11	o	.12		
Sanitary & Potable Water - Plant	2	3	o	.09		
SUBTOTAL	138	222		1,597	1,267	55
TOTAL	4,821	7,776		1,947	1,393	92

FOOTNOTES

s, primarily soluble inorganic waste

i, primarily insoluble inorganic waste

o, primarily insoluble organic waste

SITE GILLETTE

PLANT TYPE Synthoil, 100,000 bbl per stream day @ 90% load factor

	WATER CONSUMED			SOLIDS		
	GAL/C. MIN	ACRE-FT/YR	s, i, o	WET-SOLID TONS/C. DAY	DRY SOLID TONS/C. DAY	WATER IN SOLID GAL/C. MIN
PROCESS						
Net Water Consumed	290	468				
Condensate Treatment Sludge	8	13	o	61	12	8
Boiler Demineralizer Waste	1	1	s	8	4	0.6
SUBTOTAL	299	482		69	16	9
COOLING						
Evaporated	4,718	7,610				
Treatment Waste	1	2	s	15	8	1.3
	4	6	i	46	23	3.9
Drift & Leakage	137	221				
SUBTOTAL	4,860	7,839		61	31	5.2
FLUE GAS DESULFURIZATION						
MINING						
Road, Mine, Embankment Dust Control	62	100				
Handling & Crushing Dust Control	149	240				
Service & Fire Water	11	18				
Sanitary & Potable Water	2	3	o	.06		
Revegetation	–	–				
Coal Washing	–	–				
SUBTOTAL	224	361	o	.06		
EVAPORATION, SOLIDS DISPOSAL & OTHERS						
Settling Basin Evaporation	20	32				
Reservoir Evaporation	20	32				
Bottom Ash Disposal	233	376	i	3,248	2,498	125
Fly Ash Disposal	–	–		–	–	–
Dust Control - Plant	50	81				
Service & Fire Water - Plant	11	18	o	.20		
Sanitary & Potable Water - Plant	4	6	o	.15		
SUBTOTAL	338	545		3,248	2,498	125
TOTAL	5,721	9,227		3,378	2,545	139

FOOTNOTES

s, primarily soluble inorganic waste

i, primarily insoluble inorganic waste

o, primarily insoluble organic waste

SITE GILLETTE

PLANT TYPE 3,000 MWe @ 35% eff. and 70% load factor

	WATER CONSUMED			SOLIDS		
	GAL/C. MIN	ACRE-FT/YR	s, i, o	WET-SOLID TONS/C. DAY	DRY SOLID TONS/C. DAY	WATER IN SOLID GAL/C. MIN
PROCESS						
Net Water Consumed						
Condensate Treatment Sludge						
Boiler Demineralizer Waste	0.1	0.2		1.6	0.8	0.1
SUBTOTAL	0.1	0.2		1.6	0.8	0.1
COOLING						
Evaporated	14,075	22,703				
Treatment Waste	18	29	i	182	73	18
Drift & Leakage	40	65				
SUBTOTAL	14,133	22,797		182	73	18
FLUE GAS DESULFURIZATION	1,512	2,439		1,373	549	137
MINING						
Road, Mine, Embankment Dust Control	40	65				
Handling & Crushing Dust Control	97	156				
Service & Fire Water	8	13				
Sanitary & Potable Water	1	2	o	.04		
Revegetation	-	-				
Coal Washing	-	-				
SUBTOTAL	146	235	o	.04		
EVAPORATION, SOLIDS DISPOSAL & OTHERS						
Settling Basin Evaporation	55	89				
Reservoir Evaporation	55	89				
Bottom Ash Disposal	27	43	i	422	326	16
Fly Ash Disposal	54	87	i	1,627	1,303	54
Dust Control - Plant	32	52				
Service & Fire Water - Plant	5	8	o	.08		
Sanitary & Potable Water - Plant	2	3	o	.07		
SUBTOTAL	230	371		2,049	1,629	70
TOTAL	16,021	25,842		3,606	2,252	225

FOOTNOTES

s, primarily soluble inorganic waste

i, primarily insoluble inorganic waste

o, primarily insoluble organic waste

SITE KAIPAROWITS/ESCALANTE

PLANT TYPE 3,000 MWe @ 35% eff. and 70% load factor

	WATER CONSUMED			SOLIDS		
	GAL/C. MIN	ACRE-FT/YR	s, i, o	WET-SOLID TONS/C. DAY	DRY SOLID TONS/C. DAY	WATER IN SOLID GAL/C. MIN
PROCESS						
Net Water Consumed						
Condensate Treatment Sludge						
Boiler Demineralizer Waste	0.2	0.3	s	2.3	1.2	0.2
SUBTOTAL	0.2	0.3		2.3	1.2	0.2
COOLING						
Evaporated	14,770	23,824				
Treatment Waste	26	42	i	262	104	26
Drift & Leakage	36	58				
SUBTOTAL	14,832	23,924		262	104	26
FLUE GAS DESULFURIZATION	2,313	3,731		1,410	564	141
MINING						
Road, Mine, Embankment Dust Control	389	628				
Handling & Crushing Dust Control						
Service & Fire Water	62	100				
Sanitary & Potable Water	12	19	o	.32		
Revegetation	8	13				
Coal Washing	658	1,061	i	4,467	4,020	75 COARSE REJECT
			i,o	6,359	3,564	466 TAILINGS
SUBTOTAL	1,129	1,821		10,826	7,584	541
EVAPORATION, SOLIDS DISPOSAL & OTHERS						
Settling Basin Evaporation	–	–				
Reservoir Evaporation	97	156				
Bottom Ash Disposal	27	44	i	415	319	16
Fly Ash Disposal	53	85	i	1,592	1,274	53
Dust Control - Plant	25	40				
Service & Fire Water - Plant	6	10	o	.10		
Sanitary & Potable Water - Plant	3	5	o	.07		
SUBTOTAL	211	340		2,007	1,593	69
TOTAL	18,485	29,816		14,507	9,846	777

FOOTNOTES

s, primarily soluble inorganic waste

i, primarily insoluble inorganic waste

o, primarily insoluble organic waste

SITE NAVAJO/FARMINGTON

PLANT TYPE Lurgi, 250 x 10^6 scf per stream day @ 90% load factor

	WATER CONSUMED			SOLIDS		
	GAL/C. MIN	ACRE-FT/YR	s, i, o	WET-SOLID TONS/C. DAY	DRY SOLID TONS/C. DAY	WATER IN SOLID GAL/C. MIN
PROCESS						
Net Water Consumed	526	848				
Condensate Treatment Sludge	11	18	o	80	16	11
Boiler Demineralizer Waste	2	3	s	18	9	1.5
SUBTOTAL	539	869		98	25	13
COOLING						
Evaporated	1,792	2,891				
Treatment Waste	1	1.6	s	17	9	1.4
	1	1.6	i	13	6	1.1
Drift & Leakage	52	84				
SUBTOTAL	1,846	2,978		30	15	2.5
FLUE GAS DESULFURIZATION	289	466		468	187	47
MINING						
Road, Mine, Embankment Dust Control	97	156				
Handling & Crushing Dust Control	85	137				
Service & Fire Water	9	15				
Sanitary & Potable Water	2	3	o	.05		
Revegetation	130	210				
Coal Washing	-	-				
SUBTOTAL	323	521	o	.05		
EVAPORATION, SOLIDS DISPOSAL & OTHERS						
Settling Basin Evaporation	16	26				
Reservoir Evaporation	16	26				
Bottom Ash Disposal	401	647	i	6,787	5,222	261
Fly Ash Disposal	28	45	i	835	667	28
Dust Control - Plant	28	45				
Service & Fire Water - Plant	7	11	o	.13		
Sanitary & Potable Water - Plant	3	5	o	.09		
SUBTOTAL	499	805		7,622	5,889	289
TOTAL	3,496	5,639		8,218	6,116	352

FOOTNOTES

s, primarily soluble inorganic waste

i, primarily insoluble inorganic waste

o, primarily insoluble organic waste

SITE NAVAJO/FARMINGTON

PLANT TYPE Synthane, 250 x 10^6 scf per stream day @ 90% load factor

	WATER CONSUMED			SOLIDS		
	GAL/C. MIN	ACRE-FT/YR	s, i, o	WET-SOLID TONS/C. DAY	DRY SOLID TONS/C. DAY	WATER IN SOLID GAL/C. MIN
PROCESS						
Net Water Consumed	658	1,061				
Condensate Treatment Sludge	14	23	o	105	21	14
Boiler Demineralizer Waste	1	1.6	s	17	8	1.4
SUBTOTAL	673	1,086		122	29	15
COOLING						
Evaporated	3,384	5,459				
Treatment Waste	2	3	s	27	14	2.3
	2	3	i	24	12	2
Drift & Leakage	98	158				
SUBTOTAL	3,486	5,623		51	26	4.3
FLUE GAS DESULFURIZATION	532	858		170	68	17
MINING						
Road, Mine, Embankment Dust Control	87	140				
Handling & Crushing Dust Control	77	124				
Service & Fire Water	8	13				
Sanitary & Potable Water	2	3	o	.04		
Revegetation	117	189				
Coal Washing	-	-				
SUBTOTAL	291	469	o	.04		
EVAPORATION, SOLIDS DISPOSAL & OTHERS						
Settling Basin Evaporation	25	40				
Reservoir Evaporation	25	40				
Bottom Ash Disposal	123	199	i	1,916	1,472	74
Fly Ash Disposal	184	297	i	5,521	4,417	184
Dust Control - Plant	26	42				
Service & Fire Water - Plant	7	11	o	.13		
Sanitary & Potable Water - Plant	3	5	o	.09		
SUBTOTAL	393	634		7,437	5,889	258
TOTAL	5,375	8,670		7,780	6,012	294

FOOTNOTES

s, primarily soluble inorganic waste

i, primarily insoluble inorganic waste

o, primarily insoluble organic waste

SITE NAVAJO/FARMINGTON

PLANT TYPE Synthoil, 100,000 bbl per stream day @ 90% load factor

	WATER CONSUMED			SOLIDS		
	GAL/C. MIN	ACRE-FT/YR	s, i, o	WET-SOLID TONS/C. DAY	DRY SOLID TONS/C. DAY	WATER IN SOLID GAL/C. MIN
PROCESS						
Net Water Consumed	625	1,009				
Condensate Treatment Sludge	7	11	o	52	10	7
Boiler Demineralizer Waste	1	1.6	s	6	3	0.5
SUBTOTAL	633	1,021		58	13	8
COOLING						
Evaporated	4,765	7,686				
Treatment Waste	1	2	s	13	7	1.1
	4	6	i	41	21	3.5
Drift & Leakage	138	223				
SUBTOTAL	4,908	7,917		54	28	4.6
FLUE GAS DESULFURIZATION						
MINING						
Road, Mine, Embankment Dust Control	172	278				
Handling & Crushing Dust Control	151	244				
Service & Fire Water	17	27				
Sanitary & Potable Water	3	5	o	.08		
Revegetation	232	374				
Coal Washing	-	-				
SUBTOTAL	575	928	o	.08		
EVAPORATION, SOLIDS DISPOSAL & OTHERS						
Settling Basin Evaporation	33	53				
Reservoir Evaporation	33	53				
Bottom Ash Disposal	1,035	1,670	i	14,430	11,100	555
Fly Ash Disposal	-	-		-	-	-
Dust Control - Plant	50	80				
Service & Fire Water - Plant	13	21	o	.24		
Sanitary & Potable Water - Plant	6	10	o	.15		
SUBTOTAL	1,170	1,887		14,430	11,100	555
TOTAL	7,286	11,753		14,542	11,141	568

FOOTNOTES

s, primarily soluble inorganic waste

i, primarily insoluble inorganic waste

o, primarily insoluble organic waste

SITE NAVAJO/FARMINGTON

PLANT TYPE 3,000 MWe @ 35% eff. and 70% load factor

	WATER CONSUMED			SOLIDS		
	GAL/C. MIN	ACRE-FT/YR	s, i, o	WET-SOLID TONS/C. DAY	DRY SOLID TONS/C. DAY	WATER IN SOLID GAL/C. MIN
PROCESS						
Net Water Consumed						
Condensate Treatment Sludge						
Boiler Demineralizer Waste	0.1	0.2		1.2	0.6	0.1
SUBTOTAL	0.1	0.2		1.2	0.6	0.1
COOLING						
Evaporated	14,617	23,577				
Treatment Waste	17	28	i	171	67	17
Drift & Leakage	38	61				
SUBTOTAL	14,672	23,666		171	67	17
FLUE GAS DESULFURIZATION	2,456	3,961		3,970	1,588	397
MINING						
Road, Mine, Embankment Dust Control	112	181				
Handling & Crushing Dust Control	99	160				
Service & Fire Water	11	18				
Sanitary & Potable Water	2	3	o	.05		
Revegetation	151	244				
Coal Washing	–	–				
SUBTOTAL	375	606	o	.05		
EVAPORATION, SOLIDS DISPOSAL & OTHERS						
Settling Basin Evaporation	83	134				
Reservoir Evaporation	83	134				
Bottom Ash Disposal	158	255	i	2,463	1,893	95
Fly Ash Disposal	237	382	i	7,099	5,677	237
Dust Control - Plant	33	53				
Service & Fire Water - Plant	6	10	o	.11		
Sanitary & Potable Water - Plant	3	5	o	.07		
SUBTOTAL	603	973		9,562	7,570	332
TOTAL	18,106	29,206		13,704	9,226	746

FOOTNOTES

s, primarily soluble inorganic waste

i, primarily insoluble inorganic waste

o, primarily insoluble organic waste

SITE RIFLE

PLANT TYPE 1,000 MWe @ 35% eff. and 70% load factor

	WATER CONSUMED			SOLIDS		
	GAL/C. MIN	ACRE-FT/YR	s, i, o	WET-SOLID TONS/C. DAY	DRY SOLID TONS/C. DAY	WATER IN SOLID GAL/C. MIN
PROCESS						
Net Water Consumed						
Condensate Treatment Sludge						
Boiler Demineralizer Waste	0.03	0.05	s	0.3	0.2	0.03
SUBTOTAL	0.03	0.05		0.3	0.2	0.03
COOLING						
Evaporated	4,867	7,851				
Treatment Waste	4	7	i	45	18	4
Drift & Leakage	12	19				
SUBTOTAL	4,883	7,877		45	18	4
FLUE GAS DESULFURIZATION	884	1,426		520	208	52
MINING						
Road, Mine, Embankment Dust Control	29	47				
Handling & Crushing Dust Control	21	34				
Service & Fire Water	3	5				
Sanitary & Potable Water	1	2		.01		
Revegetation	-	-				
Coal Washing	-	-				
SUBTOTAL	54	88		.01		
EVAPORATION, SOLIDS DISPOSAL & OTHERS						
Settling Basin Evaporation	17	27.5				
Reservoir Evaporation	17	27.5				
Bottom Ash Disposal	7	11	i	100	76	4
Fly Ash Disposal	13	21	i	380	302	13
Dust Control - Plant	7	11				
Service & Fire Water - Plant	2	3	o	.04		
Sanitary & Potable Water - Plant	1	2		.03		
SUBTOTAL	64	103		480	378	17
TOTAL	5,885	9,494		1,045	604	73

FOOTNOTES

s, primarily soluble inorganic waste

i, primarily insoluble inorganic waste

o, primarily insoluble organic waste

SITE RIFLE

PLANT TYPE Shale, 50,000 bbl per stream day @ 90% load factor

	WATER CONSUMED			SOLIDS		
	GAL/C. MIN	ACRE-FT/YR	s, i, o	WET-SOLID TONS/C. DAY	DRY SOLID TONS/C. DAY	WATER IN SOLID GAL/C. MIN
PROCESS						
Net Water Consumed						
Retort	716	1,155				
Refinery	548	884				
SUBTOTAL	1,264	2,039				
COOLING						
Evaporated	874	1,410				
Treatment Waste	-	-				
Drift & Leakage	26	42				
SUBTOTAL	900	1,452				
FLUE GAS DESULFURIZATION						
MINING						
Road, Mine, Embankment Dust Control	315	508				
Handling & Crushing Dust Control	198	319				
Service & Fire Water	11	18				
Sanitary & Potable Water	2	3	o	.05		
Revegetation	43	69				
SUBTOTAL	569	917	o	.05		
EVAPORATION, SOLIDS DISPOSAL & OTHERS						
Settling Basin Evaporation	12	19				
Reservoir Evaporation	12	19				
Spent Shale Disposal	1,125	1,815	i,soluble org.	55,022	48,263	1,127
Venturi Scrubbing Dust Control	90	145	i,soluble org.	871	331	90
Dust Control - Plant	33	53				
Service & Fire Water - Plant	9	15	o	.17		
Sanitary & Potable Water - Plant	4	6	o	.11		
SUBTOTAL	1,285	2,072		55,893	48,594	1,217
TOTAL	4,081	6,480		55,893	48,594	1,217

FOOTNOTES

s, primarily soluble inorganic waste

i, primarily insoluble inorganic waste

o, primarily insoluble organic waste

SITE RIFLE

PLANT TYPE Shale, 100,000 bbl per stream day at 90% load factor

	WATER CONSUMED			SOLIDS		
	GAL/C. MIN	ACRE-FT/YR	s, i, o	WET-SOLID TONS/C. DAY	DRY SOLID TONS/C. DAY	WATER IN SOLID GAL/C. MIN
PROCESS						
Net Water Consumed						
Retort	1,432	2,310				
Refinery	1,096	1,768				
SUBTOTAL	2,528	4,078				
COOLING						
Evaporated	1,748	2,819				
Treatment Waste	1	1.6		9	5	0.7
Drift & Leakage	52	84				
SUBTOTAL	1,801	2,905		9	5	0.7
FLUE GAS DESULFURIZATION						
MINING						
Road, Mine, Embankment Dust Control	630	1,016				
Handling & Crushing Dust Control	396	639				
Service & Fire Water	21	34				
Sanitary & Potable Water	4	6	o	.11		
Revegetation	86	139				
SUBTOTAL	1,137	1,834	o	.11		
EVAPORATION, SOLIDS DISPOSAL & OTHERS						
Settling Basin Evaporation						
Reservoir Evaporation	23	37				
Spent Shale Disposal	2,250	3,629	i,soluble org.	110,045	96,526	2,254
Venturi Scrubbing Dust Control	180	290	i,soluble org.	1,742	662	180
Dust Control - Plant	66	107				
Service & Fire Water - Plant	19	31	o	.34		
Sanitary & Potable Water - Plant	8	13	o	.22		
SUBTOTAL	2,546	4,107		111,788	97,188	2,434
TOTAL	8,012	12,924		111,797	97,193	2,435

FOOTNOTES

s,primarily soluble inorganic waste

i,primarily insoluble inorganic waste

o,primarily insoluble organic waste

11. FINDINGS

The findings of this study are presented in the following sections on the basis of total site-specific water consumption and residuals, a breakdown of these quantities, and regional water consumption and residuals.

11.1 Total Site-Specific Water Consumption and Residuals

Table 10-1, repeated here as Table 11-1, summarizes the study findings on the net annual water consumption and wet solid residuals generated at each site for the unit size mine-plant complexes assumed to be located there.

The largest variation in water consumption as a function of site (a factor of about 1.7) is for the Lurgi process. This is principally a consequence of the differences in coal moisture at the different locations. The lowest consumption is at Beulah, North Dakota where the net consumed water is found to be 2.96×10^6 gal/day (3.31×10^3 acre-ft/yr) or about one-third the lowest published design estimates. The corresponding variations in water consumption for the Synthane and Synthoil facilities are found to be relatively small being no more, respectively, than 13% and 16%. However, for the steam electric power generating plants a maximum difference in water consumption of 25% is noted. These same findings do not hold for the residuals, as we shall discuss below.

Since both the products and outputs of the Lurgi and Synthane plants are the same, these two facilities may from this point of view be compared directly. It is found that a Synthane complex uses from 1.5 to 2.3 times the water that a Lurgi facility does at the same site. This is a consequence of comparing unlike technologies. It is related in part

Table 11-1. Summary of net annual water consumption and wet solid residuals generated at each site.

FACILITY	BEULAH, NORTH DAKOTA	COLSTRIP, MONTANA	GILLETTE, WYOMING	KAIPAROWITS/ ESCALANTE, UTAH	NAVAJO/ FARMINGTON, NEW MEXICO	RIFLE, COLORADO
SLURRY PIPELINE (25 x 10^6 tons/yr @ 100% load factor)						
NET WATER CONSUMED - 10^3 ACRE-FT/YR*			19.17			
WET SOLID RESIDUALS - 10^6 TONS/YR			-			
LURGI (250 x 10^6 scf/stream day @ 90% load factor)						
NET WATER CONSUMED - 10^3 ACRE-FT/YR	3.31	4.62	4.21		5.64	
WET SOLID RESIDUALS - 10^6 TONS/YR	1.20	1.27	0.72		3.00	
SYNTHANE (250 x 10^6 scf/stream day @ 90% load factor)						
NET WATER CONSUMED - 10^3 ACRE-FT/YR	7.67	7.81	7.78		8.67	
WET SOLID RESIDUALS - 10^6 TONS/YR	1.08	1.12	0.71		2.84	
SYNTHOIL (100,000 bbl/stream day @ 90% load factor)						
NET WATER CONSUMED - 10^3 ACRE-FT/YR	10.09	10.30	9.23		11.75	
WET SOLID RESIDUALS - 10^6 TONS/YR	2.00	2.07	1.23		5.31	
ELECTRICAL GENERATION (3,000 MWe @ 35% eff, 70% load factor)						
NET WATER CONSUMED - 10^3 ACRE-FT/YR	23.88	26.66	25.84	29.82	29.21	
WET SOLID RESIDUALS - 10^6 TONS/YR	2.65	3.01	1.32	5.30	5.00	
ELECTRICAL GENERATION (1,000 MWe @ 35% eff, 70% load factor)						
NET WATER CONSUMED - 10^3 ACRE-FT/YR						9.49
WET SOLID RESIDUALS - 10^6 TONS/YR						0.38
OIL SHALE (50,000 bbl/stream day @ 90% load factor)						
NET WATER CONSUMED - 10^3 ACRE-FT/YR						6.48
WET SOLID RESIDUALS - 10^6 TONS/YR						20.40
OIL SHALE (100,000 bbl/stream day @ 90% load factor)						
NET WATER CONSUMED - 10^3 ACRE-FT/YR						12.92
WET SOLID RESIDUALS - 10^6 TONS/YR						40.81

*To convert 10^3 acre-ft/yr to 10^6 tons/yr multiply by 1.36,
to convert 10^3 acre-ft/yr to 10^6 gal/day multiply by 0.894.

to the fact that the Lurgi process accepts wet coal and therefore the moisture is utilized, but at a cost. This same water could in principle also be recovered in Synthane plants from coal drying, but also at a cost. Nevertheless, with the water treatment designs of this study, the absolute consumptions of the Synthane plants are still below the lowest published water consumption estimates for gasification plants of this size.

The products of the 100,000 bbl/day Synthoil and TOSCO II oil shale facilities are roughly the same, so that they may with reason be compared between themselves. It is of interest that their net water consumptions are roughly comparable, with the shale oil facility about 20% higher. However, the solid residuals from the oil shale processing are very much higher, as we shall discuss below.

In comparing the absolute water requirements between processes caution must be exercised, since generally the fuel inputs and product outputs are not directly comparable. One means of comparison among processes, whose outputs are fuels to be used for their heating value, is to express the net water consumptions in terms of gallons per million Btu of fuel produced (gal/10^6 Btu). We may include the slurry pipeline in this comparison if we take the output to be the heating value of the coal being transported. In a rough manner, we may likewise include electric power generation in the comparison by expressing the net water consumed in terms of the heating value of the <u>input</u> coal, that is, gal/10^6 Btu of input. In Table 11-2 are shown the water requirements in gal/10^6 Btu, with no distinction made as to consumption between the sites but with overall ranges given instead.

Table 11-2. Net water consumed for Western coal sites per million Btu of heating value in product.

Facility	Net Water Consumed ($gal/10^6$ Btu)
Lurgi	14-24
Synthane	32-36
Synthoil	15-19
Oil Shale	23
Slurry Pipeline	14
Electric Generation	43-54*

*$gal/10^6$ Btu of heating value of input coal.

As a very approximate finding, Table 11-2 would seem to show that with the design procedures used in this study and with proper water treatment design the Lurgi, Synthoil, oil shale and slurry pipeline water requirements are roughly the same when expressed per unit of heating output. The slurry pipeline requirement is at the lower end of the spread, while oil shale is at the upper end. The Synthane facilities require about 2 times more water and electric power generation at least 2.5 times more, as measured in terms of the heating value of the input coal.

As shown in Table 11-1, for a given facility the quantity of solid residuals is very site dependent. For each of the coal conversion processes including electric generation, the largest variation between sites is more than a factor of 4. This large variation occurs for all the processes between Navajo/Farmington, New Mexico and Gillette, Wyoming principally as a result of the relatively high ash content of the Navajo coal compared to that at Gillette (and the other sites). A big fraction

of the large quantity of residuals generated at Kaiparowits is coal refuse, a consequence of the fact that the coal is underground mined. Outstripping all the coal conversion residuals by an order of magnitude are those from shale oil processing, where the primary residual is the wet spent shale. Comparing the 100,000 bbl/day Synthoil and TOSCO II oil shale facilities, the quantities of shale residuals are from 8 to 33 times those from the coal conversion plants.

11.2 Site-Specific Water Consumption and Residual Breakdowns

To clarify how the water is consumed and from where the residuals arise, in Figs. 11-1 to 11-3 are shown breakdowns of the consumed water by use and of the wet solid residuals by type. The breakdowns are given in Fig. 11-1 for the production of 250 x 10^6 scf/day of synthetic natural gas by the Lurgi and Synthane processes; in Fig. 11-2 for the production of 100,000 bbl/day of synthetic fuel oil by the Synthoil process and from oil shale by the TOSCO II process; and in Fig. 11-3 for the generation of 3,000 MWe of electricity by coal-fired steam generation. The sites are those discussed throughout the study.

For clarity of graphical presentation, the five major water consumption categories and their subcategories are combined into three principal use groups: (1) process and flue gas desulfurization (FGD), (2) cooling and (3) solids disposal, mining and other. Although in the detailed analyses solids disposal is broken down into a large number of categories, for simplicity of presentation they are here combined into the following main groups: (1) ash, (2) flue gas desulfurization (FGD) sludge, (3) spent shale, (4) coal refuse and (5) other wastes. In the graphs of Figs. 11-1 and 11-3, generally only two types of waste are

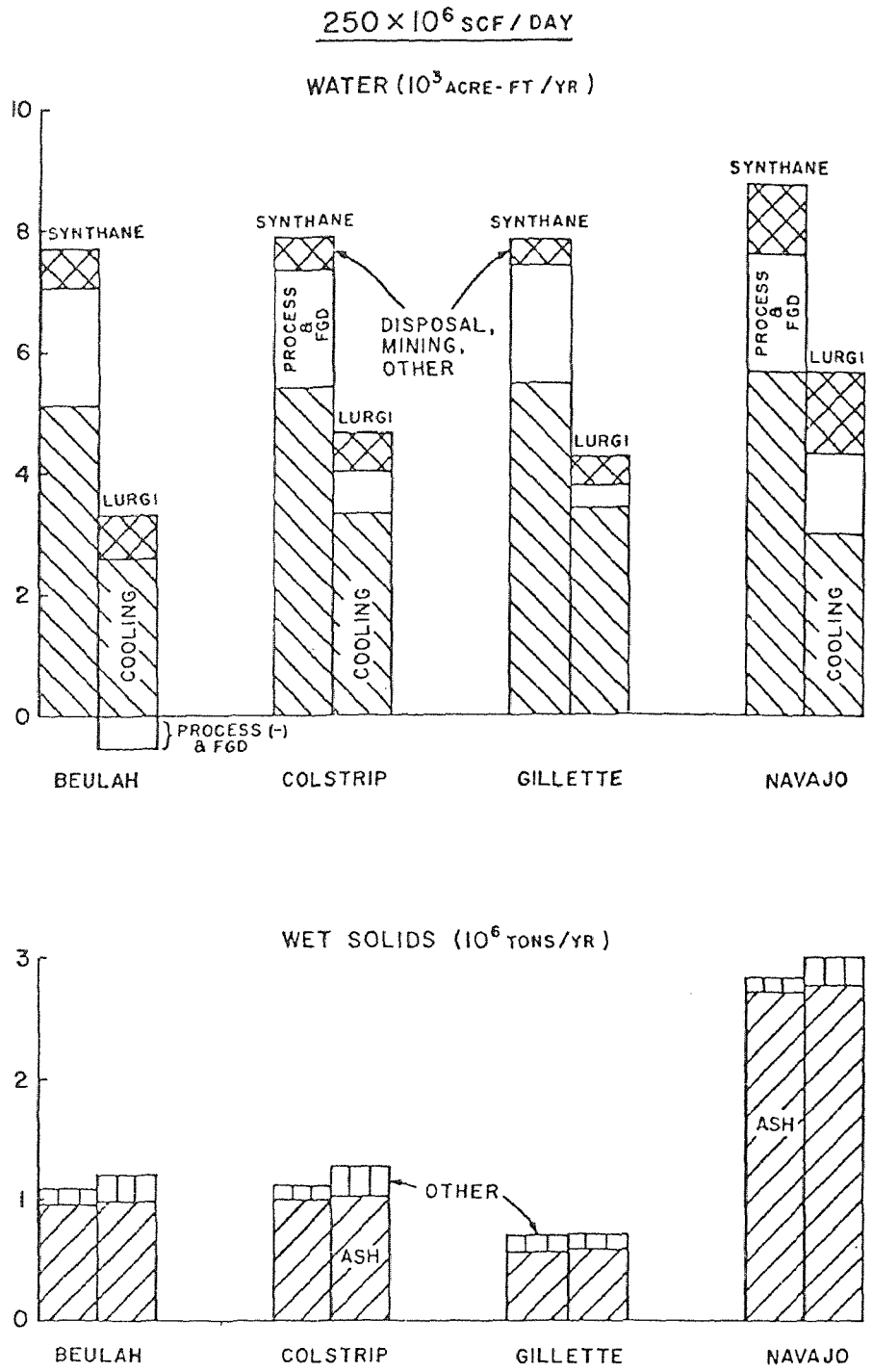

Fig. 11-1. Breakdown of net annual water consumption and wet solid residuals generated in the production of 250 x 10^6 scf/stream day of synthetic natural gas by the Lurgi and Synthane processes at different Western sites.

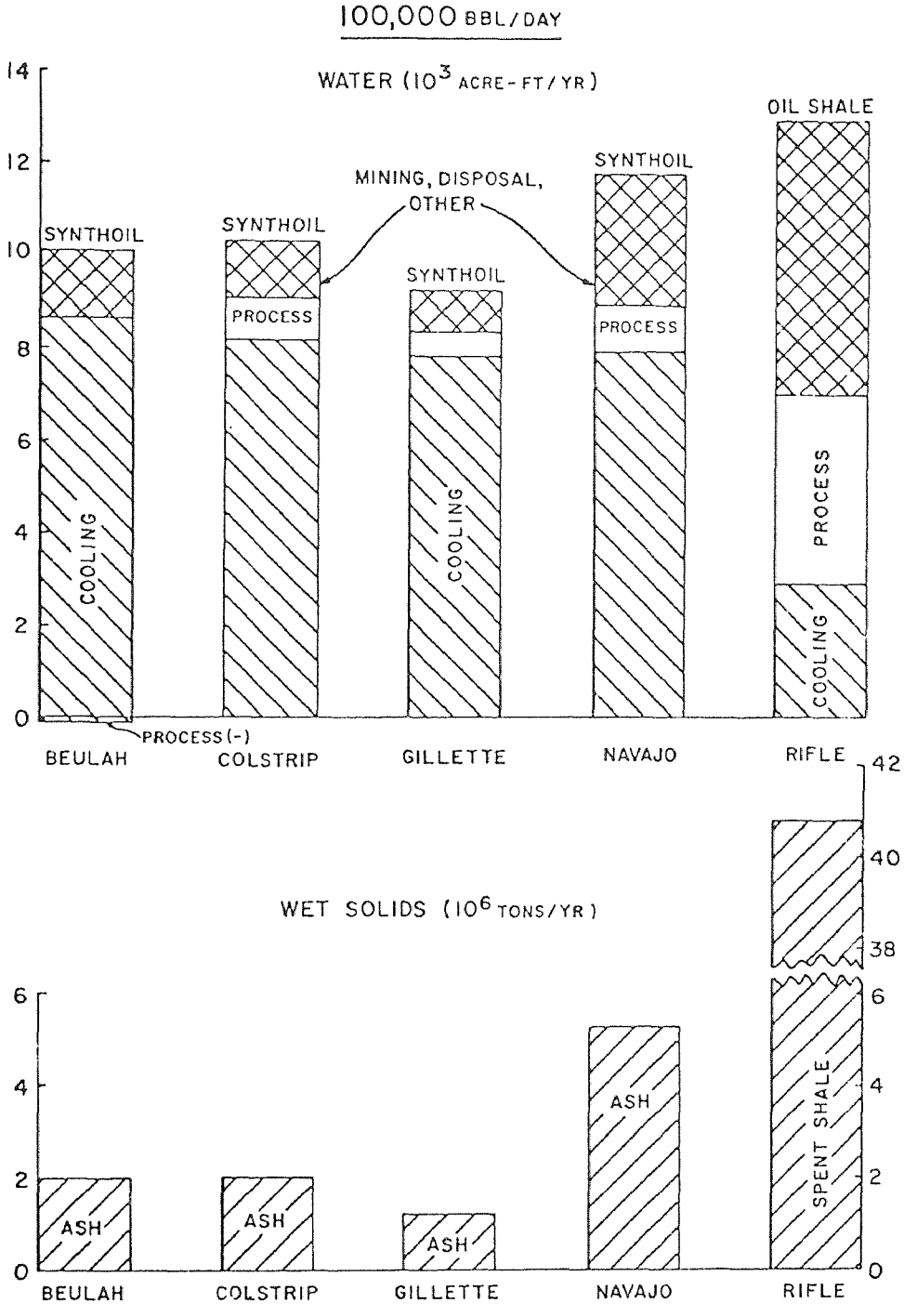

Fig. 11-2. Breakdown of net annual water consumption and wet solid residuals generated in the production of 100,000 bbl/stream day of fuel oil by the Synthoil process at different Western sites and by the TOSCO II oil shale process at Rifle, Colorado.

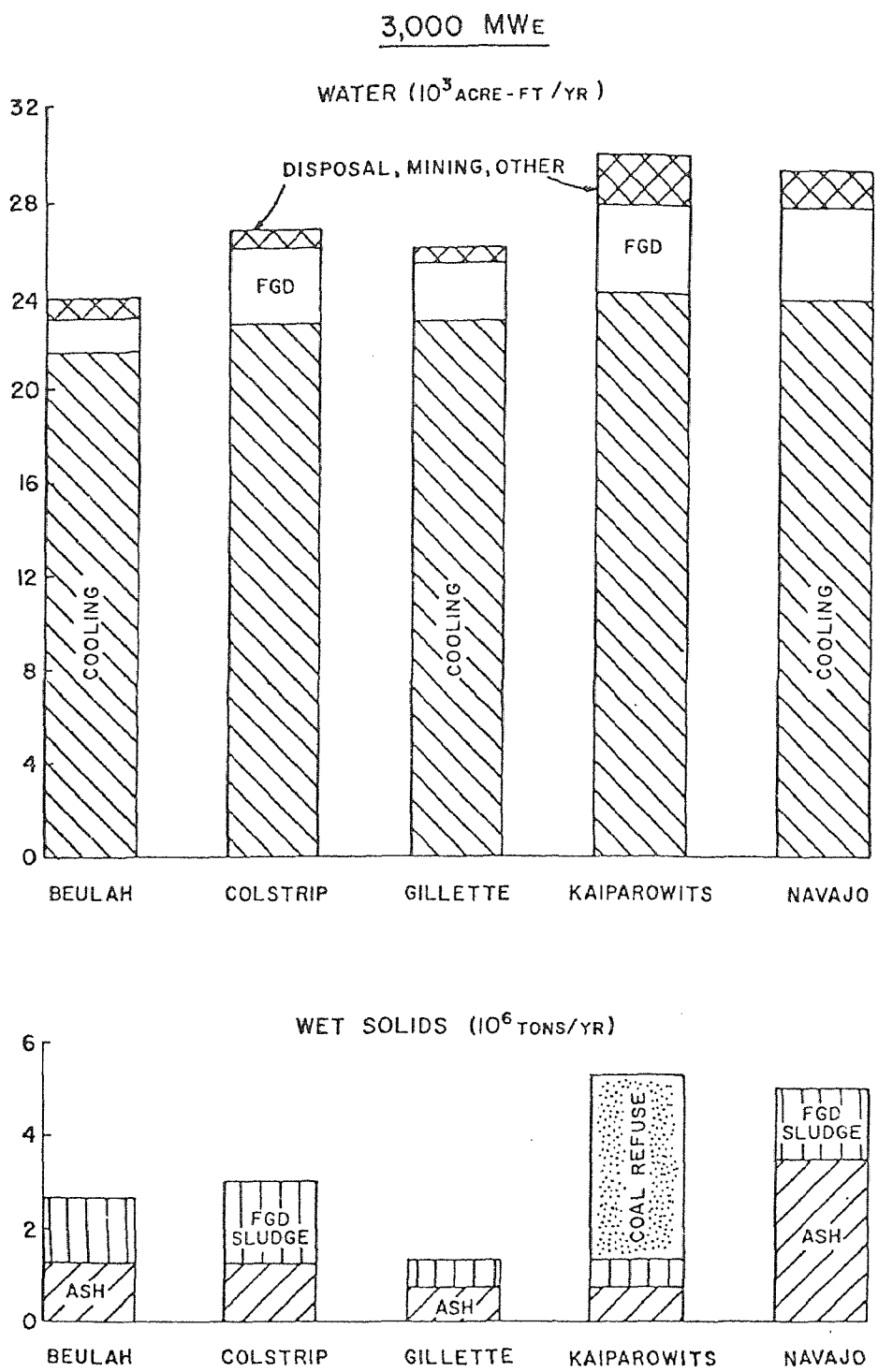

Fig. 11-3. Breakdown of net annual water consumption and wet solid residuals generated in the production of 3,000 MWe/stream day of electricity by coal-fired steam-electric generating plants at different Western sites.

indicated and in Fig. 11-2 only one type, because the contributions of the remaining types are negligibly small on the scales of the figures.

Process and Flue Gas Desulfurization (FGD) Water

The process water requirement relates to the fact that hydrogen is needed for the fuel conversions, and its source is water. The water consumed depends on the difference between the hydrogen to carbon ratio in the coal or shale to this same ratio in the product fuel. A second factor in determining net consumed process water is the moisture present in the coal or shale, which is not treated as a water input but which may be recovered in the process.

The consequence of these facts is evident in the findings that the Synthane process water requirements are independent of site, amounting to about 4.5 gal/10^6 Btu (1,087 acre-ft/yr). As noted, the coal moisture could be recovered at a cost prior to its conversion, but this is an economic question. The Synthane process makes maximum use of the hydrogen in the coal in contrast to the Lurgi process. On the other hand, the Lurgi process accepts wet coal and the coal moisture overshadows the process requirement, though the resulting dirty process condensate must be treated at a cost. The Lurgi process water is found to range between a net consumption of 3.6 gal/10^6 Btu (869 acre-ft/yr) at Navajo, New Mexico to a net production of 3.1 gal/10^6 Btu (740 acre-ft/yr) at Beulah, North Dakota. As we point out below, the Lurgi flue gas desulfurization water also depends directly on the coal moisture, while in the Synthane process it does not because dry char is used in the boilers. These results taken together explain the constancy of the Synthane process and FGD water in Fig. 11-1 and the variability with site of the corresponding Lurgi requirements.

The crude oil product of the Synthoil plant has a hydrogen to carbon ratio not much greater than that of the coal. As a result, the process water is found to range from a net consumption of only 1.6 gal/10^6 Btu (1,021 acre-ft/yr) at Navajo, New Mexico to a net production of 0.15 gal/10^6 Btu (95 acre-ft/yr) at Beulah, North Dakota. This variation, illustrated in Fig. 11-2, is associated with variations in the oxygen content of the coal. The principal loss of water is as a consequence of water vapor released up the stack when light hydrocarbons produced in the process are burnt. The process water requirement for the 100,000 bbl/day TOSCO II oil shale plant shown in Fig. 11-2 is about 7.3 gal/10^6 Btu (4,078 acre-ft/yr). This result is large and cannot be compared directly with the Synthoil results because the biggest part of the consumption includes water that is vaporized and lost in wet scrubbing of the stack gases, in moisturizing the spent shale and in removing sulfur in the upgrading process.

Process steam is generated in the Lurgi, Synthane and electric power generating facilities with the concomitant generation of sulfur dioxide in the combustion gases. The procedures considered for the removal of the SO_2 before it is released to the stack are wet scrubbing utilizing lime, limestone or both. In these procedures water leaves the plant as vapor in the flue gas and in the slurry of spent solids. By far the largest quantity of water leaves as saturated vapor in the scrubbed flue gas and the amount is found to depend critically on the flue gas temperature. In this study a temperature of 120°F was assumed, but a variation of 10°F could give a 40% higher water quantity. This is important since generally tight temperature control will be difficult

to achieve. Apart from temperature, the largest single factor affecting the water requirement is the moisture content of the coal fed to the boilers. For example, at Beulah, North Dakota only 0.10 lbs water/lb coal is required compared to 0.44 lbs water/lb coal at Navajo, New Mexico and 0.7 lbs water/lb char in the Synthane process. The water leaving in the waste solids is proportional to the sulfur content in the coal but is generally a small fraction of the total FGD requirement. The exception to this is when a very wet North Dakota lignite is used and the total flue gas makeup is so small that the slurry makeup becomes a sizable fraction of the total.

Cooling Water

The largest quantity of water consumed in all facilities, except oil shale, is the water evaporated for cooling. As is shown in Fig. 11-3, in electric power generation the cooling water dominates the total requirement as it does to a somewhat lesser extent in the Synthoil facilities (Fig. 11-2). Air cooling does exist as an alternative to cooling by evaporation, and the quantity of water used for cooling is dictated by economic considerations.

The process of converting coal or oil shale to another fuel or to electricity is not, and cannot be 100% efficient. The product fuel or electricity always has a lower heating value or energy content than the coal or shale input. In the conversion of coal-to-electricity about 35% of the energy in the feed coal leaves the plant as electricity. In the Lurgi or Synthane coal-to-gas plants about 65-70% of the heating value of the feed coal leaves the plant as gas plus by-products. In Synthoil coal-to-oil plants about 70-75% of the heating value of the feed coal

leaves the plant as fuel oil plus other products. In shale-to-oil plants the efficiency is somewhat higher. For the same energy input, the most important factor in determining the water required for cooling in two different plants at the same site is overall plant efficiency. It is for this reason that the water requirements for electrical generation are high when compared to other processes.

Some of the heat which is not recovered in the product or by-products may be dissipated by evaporating cooling water. Some of the unrecovered heat cannot be used to evaporate water and leaves the plant in hot gases up a flue, as water vapor from coal drying, as convective and radiant losses from machinery and container surfaces, and in other direct ways. About 25% of the unrecovered heat in all of the fuel-to-fuel and coal-to-electricity plants is lost directly as described.

In the fuel-to-fuel conversion plants (Lurgi, Synthane, Synthoil and oil shale) another 25-50% of the unrecovered heat is dissipated at temperatures that are over 140°F in locations where wet evaporative cooling is both wasteful of water and uneconomical. In these cases, air or dry cooling should be practiced.

Whether or not to use wet evaporative cooling to dissipate the remaining 25-50% of the unrecovered heat in the fuel-to-fuel plants and the roughly 75% of the unrecovered heat in the electric generating plants depends on the cost of water, buying water rights and transporting the water to the plants, as well as the cost of treating the circulating cooling water and disposing of the cooling tower residues. In the sites of this study, these costs total in the range of from $0.40 to $2.00 per 1000 gallons of water evaporated. It is also found that to within

about 5% at all the sites, 1500 Btu are dissipated per lb of water evaporated in the fuel-to-fuel plants, while 1400 Btu are dissipated per lb of water evaporated in the electric generating plants. This translates into a range of \$0.03 to \$0.17 per 10^6 Btu of unrecovered heat dissipated.

To save the water cost dry cooling must be used. However, when cooling to low temperatures the capital cost of such cooling is high. In addition, in all of the plants a large part of the unrecovered heat is dissipated in the condensers of steam turbines used to drive generators, gas compressors and other machinery. The lower is the condenser temperature, the less is the steam requirement for a constant shaft power in a steam turbine. The result, therefore, is that dry cooling also involves a fuel penalty, since it does not cool down to as low a temperature as does wet cooling.

In the electric generating plants the most important point of loss of unrecovered energy is in the turbine condensers. The heat lost in these condensers is about 48% of the heating value of the feed coal and about 75% of the unrecovered heat lost from the plant. The characteristics of the turbines are such that the added capital cost of dry cooling plus the fuel penalty dictate wet cooling, unless cooling water costs about \$4.63 per 1000 gallons evaporated. The water quantities listed in this study are all based on wet cooled condensers.

At Navajo/Farmington, New Mexico a wet/dry tower calculation for electric generation is carried out. It is shown that when water costs about \$2.20 per 1000 gallons, partial dry cooling is more economical than all wet cooling. If a water cost of \$2.20 per 1000 gallons of water is

used at all the sites, then except for Gillette, Wyoming all evaporative cooling systems would still be preferred if sufficient water is available. At Gillette the choice of an all evaporative cooling system is marginal. However, a savings in total water consumed in the cooling tower of about 75% of that required by all evaporative cooling is made at the expense of only 50% of the difference in evaluated costs between dry and all evaporative cooling.

In the Synthoil and Synthane plants wet cooling is used at all sites for the steam turbine condensers, gas compressor interstage coolers and selected final cooling of process streams. Depending on the site and process, between 42 and 54% of the unrecovered heat is taken to be dissipated by wet cooling. Cooling water requirements for the Lurgi plants are taken from existing designs and are about 2/3 that for Synthane except at Navajo, New Mexico where they are about 1/2. Wet/dry combination cooling is not examined. Wet/dry cooling can reduce the cooling water requirement to about 25% of that used and probably becomes economically viable when cooling water costs $1 to $1.50 per 1000 gallons evaporated. Thus at a site such as Gillette, Wyoming the stated cooling water requirements are certainly generous.

In Lurgi process plants, 28% of the unrecovered heat is assumed to be dissipated by wet cooling at all sites. This number comes from designs made for New Mexico and may be uneconomical, for example, in North Dakota.

Water for Solids Disposal, Mining and Other Uses

All solid residuals that leave the plant boundaries generally do so wet, and this water constitutes most of the water consumption associated

with disposal. From the study findings, the weight of water as a fraction of the total weight of wet solid residuals is found to vary with site over the ranges indicated in Table 11-3.

Table 11-3. Weight of water as a percent of total weight of wet solid residuals.

Facility	Water in Wet Solids (wt. %)
Lurgi	25-31
Synthane	22-29
Synthoil	24-25
Electric Generation	32-43
Oil Shale	13

As an approximate estimate we may say that the Lurgi, Synthane and Synthoil facilities average a weight percent of water in the wet solids in a range around 25%, with the Lurgi facility at the high end of the range. This figure is simply related to the fact that the predominant solid waste from these processes is ash, as illustrated in Figs. 11-1 and 11-2. The variation in range relates to the fraction of waste that is bottom ash, fly ash or FGD sludge, since they each require somewhat different quantities of water for disposal. The percent water in the wet solids is in a range around 38% for electric power generation. This is related to the fact that in most cases, except for the very high ash Navajo coal, the FGD sludge represents about half the solid waste. The other exception is at Kaiparowits where the largest fraction of the solid waste is coal refuse from coal cleaning with a 30% weight of water.

Both at Navajo and Kaiparowits the weight percent of water is at the low end of the range. The 13 weight percent water for the TOSCO II oil shale facility simply represents the weight percent water in the spent shale, which constitutes essentially the entire solids disposal.

In surface mining the largest use of water is for dust control at the mine, on the roads, in crushing and in handling. The exception to this is when water is required for revegetation, which for the sites examined is only necessary at Navajo/Farmington, New Mexico. In underground mining, which is considered only for Kaiparowits, the largest quantity of water is required for coal washing. The actual quantities of water needed are quite site and process specific, depending on the rate of coal mined and area stripped. Other losses include evaporative losses which are, of course, site-specific. As a very rough rule, for the Lurgi, Synthane and electric generation facilities in the graphs of Figs. 11-1 to 11-3, the mining water at Navajo is about 65% of that for solids disposal and other uses. At Gillette and Colstrip it is about 75% and at Beulah about 130%. The corresponding figures for the Synthoil facilities are 50%, 60% and 90%. These percentages are quite approximate and intended only to give some idea as to how the mining and solids disposal categories break down in the summary graphs. The oil shale mining and disposal use in Fig. 11-2 is split between 1.8×10^3 acre-ft/yr for mining and 4.1×10^3 acre-ft/yr for solids disposal and other uses. At Kaiparowits, because of the coal cleaning requirements, most of the water shown in Fig. 11-3 for disposal, mining and other uses is actually for mining, into which category coal washing is placed.

Residuals

As shown in Fig. 11-2, by far the largest residual is the spent shale generated in surface oil shale processing. The dry weight of the spent shale is 82% of the originally mined shale and with the moisturizing water it has a weight equal to 94% of the feed shale. Of particular environmental importance in the TOSCO II process is that the moisturizing water added to the spent shale leads to cementation of the shale and freezing in of the water after compaction. Were this not the case, severe leaching problems could ensue.

In the Synthane, Lurgi and Synthoil processes, ash is the principal solid residual. The quantities of ash are very site-specific because of the differences in coal heating values and ash content. The Navajo, New Mexico coal with an ash content of 25.6% is a particularly high ash coal, so that the quantities of wet-solid residuals at this site are several times those from the other sites with the same facilities.

Particularly large quantities of solid wastes in electric power generation are generated by flue gas desulfurization. The weight of the resultant wet sludges ranges from 70-130% the weight of the wet ash, except at Navajo/Farmington where it is 42%. Large quantities of solid waste are also generated whenever it is necessary to clean the coal, as is the case in the electric power generation facility at Kaiparowits. The weight of wet coal refuse there is more than 3 times the combined weight of the FGD and ash residuals.

Emphasis is placed here on the quantities of material to be disposed of and not on their toxicity or hazardous character. In this regard it is to be emphasized that although the residuals discussed are in

general harmless, they nevertheless do contain trace quantities of harmful elements and compounds. It is possible that the disposal of the large quantities of residuals noted could lead to a collective problem in the dispersion of the hazardous materials.

11.3 Regional Water Consumption and Residuals

Fig. 11-4 summarizes the study findings on the aggregated net annual water consumption and wet solid residuals generated in the region of the West in which energy development is focused. The three levels of energy development are based on the Stanford Research Institute energy model with low end-use demand, nominal end-use demand and low nuclear availability.

For each level of energy development, it is found that the aggregated net water consumption increases by a factor of 9-10 between the years 1980 and 2000, while during the same period the wet solid residuals increase by a factor of 75-100. This large increase in residuals beyond 1980 is associated with the spent shale from surface oil shale processing.

On the basis of the quantities of water consumed and residuals generated, Colorado appears to be the state most affected by energy development in the Rocky Mountain Region. This is due principally to the projected rapid growth of a surface processing oil shale industry. Montana is the most affected state in the Powder River Region, principally because of the projected growth of slurry pipeline development and electric power generation. The actual environmental impacts of siting synthetic fuel and electric power generation facilities cannot, however, be properly assessed without an appropriate determination of local and regional water supply and demand data, and residual disposal methods.

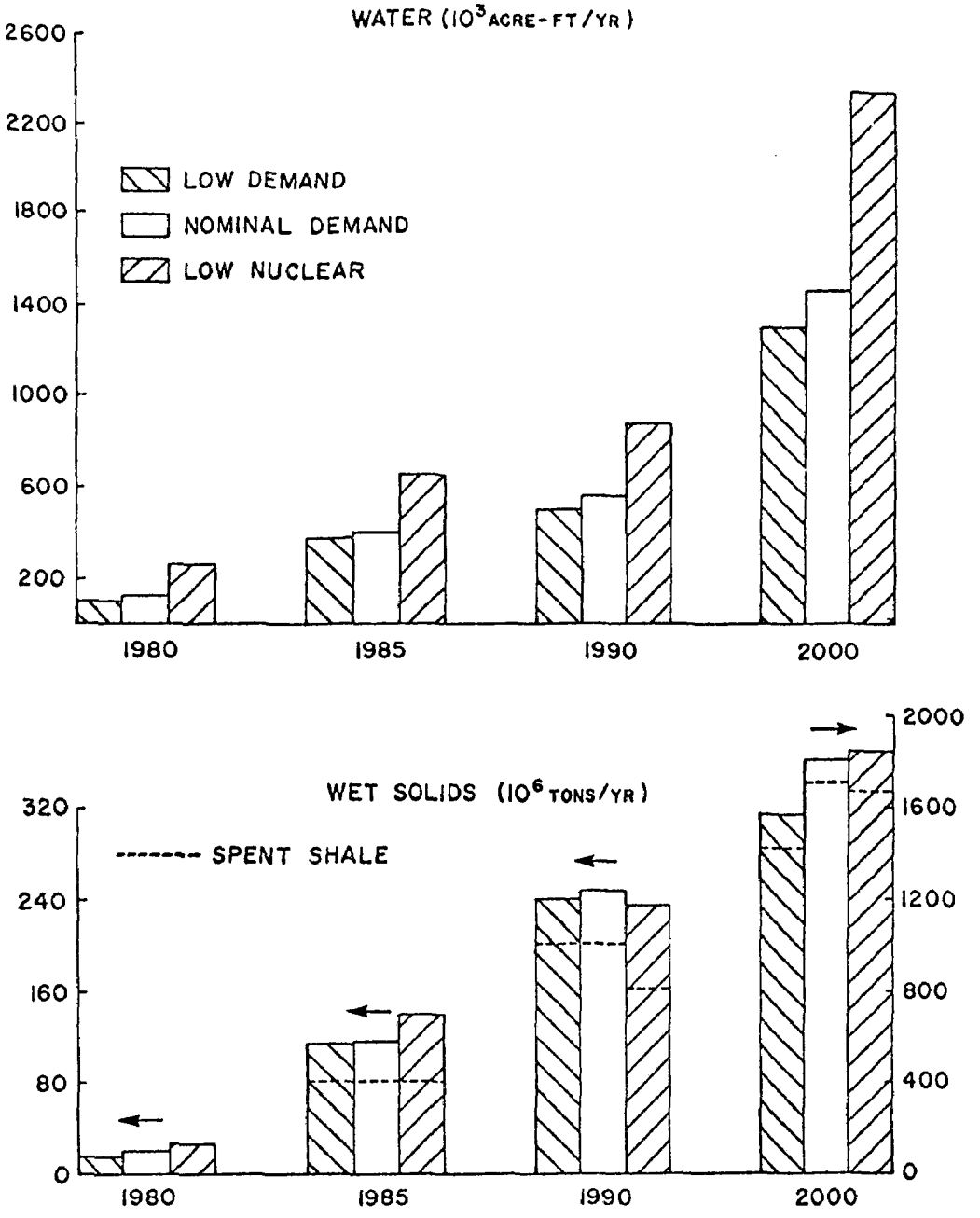

Fig. 11-4. Regional net annual water consumption and wet solid residuals generated in the Western coal and oil shale areas between the years 1980 and 2000 for three levels of energy development.

APPENDIX A. COAL ANALYSES

Coal analyses are required for carrying out the hydrogen balances described in Section 2, for determining the solid residuals in flue gas desulfurization, as described in Section 6, for determining mine and process coal tonnage requirements (Section 7), and for calculating the quantity of bottom and fly ash to be disposed of (Section 8). The coal analyses are given in Table A-1 on a wet and dry basis for each of the six sites.

References

1. Michigan Wisconsin Pipe Line Co. and ANG Gasification Co., Application for Certificates of Public Convenience and Necessity," Exhibit Z-6, p. 4, Federal Power Commission Docket CP75-278, 1974.

2. Ibid.,p. 2.

3. Converted to dry basis from data given in Ref. 1.

4. "Trials of American Coals in a Lurgi Gasifier at Westfield, Scotland," p. 55, Research and Development Report No. FE-105, Energy Research and Development Administration, Washington, D.C., November 1974.

5. Converted to dry basis from data given in Ref. 4.

6. SERNCO, "Applicants' Environmental Assessment for a Proposed Gasification Project in Cambell and Converse Counties, Wyoming, Prepared for Wyoming Coal Gas Co. and Rochelle Coal Co.," p. E-34, October 1974.

7. Converted to dry basis from data given in Ref. 6.

8. "Kaiparowits Project Final Environmental Impact Statement," Vol. I, p. I-92, Bureau of Land Management, U.S. Department of the Interior, Washington, D.C., March 3, 1976.

9. Converted to dry basis from data given in Ref. 8.

10. Batelle Columbus Laboratories, "Detailed Environmental Analysis Concerning a Proposed Gasification Plant for Transwestern Coal Gasification Co., Pacific Coal Gasification Co., Western Gasification Co., and the Expansion of a Strip Mine Operation Near Burnham, New Mexico Owned and Operated by Utah International Inc.," p. 3.11, Federal Power Commission, Feb. 1, 1973.

11. Approximation from data in El Paso Natural Gas Company, "Second Supplement to Application for Certificate of Public Convenience and Necessity," Section Z-2, p. II-C-1, Federal Power Commission Docket CP73-131, 1973, to conform with proximate analysis.

12. A high volatile B bituminous coal as is appropriate to the region.

13. Hamshar, J.A., Terzian, H.D., and Scotti, L.J., "Clean Fuels from Coal by the COED Process," in Symp. Proceedings: Environmental Aspects of Fuel Conversion Technology (May 1974, St. Louis, Mo.), p. 174, EPA Technology Series Rept. No. EPA-650/2-74-118, Office of Research and Development, Environmental Protection Agency, Washington, D.C., October 1974.

14. Converted from dry basis from data given in Ref. 13.

Table A-1. Coal analyses.

	BEULAH, NORTH DAKOTA	COLSTRIP, MONTANA	GILLETTE, WYOMING	KAIPAROWITS/ ESCALANTE, UTAH	NAVAJO/ FARMINGTON, NEW MEXICO	RIFLE, COLORADO[12]
As received						
Proximate Analysis, Wet Basis	Ref. 1	Ref. 4	Ref. 6	Ref. 8	Ref. 10	Ref. 13
Moisture, wt. %	35.98	24.70	28.0	14.8	12.4	6.4
Ash, wt. %	7.42	9.73	5.6	7.0	25.6	6.0
Volatile Matter, wt. %		29.20	32.7	36.0	28.2	39.0
Fixed Carbon, wt. %		36.37	33.7	42.2	33.8	48.6
Volatile Matter + Fixed Carbon, wt. %	56.6					
Total	100.0	100.0	100.0	100.0	100.0	100.0
Sulfur	0.71	1.16	0.32	0.42	0.91	
Higher Heating Value, BTU/lb	6,822 [2]	8,611	8,449	10,800	8,310	13,010
Ultimate Analysis, Dry Basis	Ref. 3	Ref. 5	Ref. 7	Ref. 9	Ref. 11	Ref. 14
Carbon, wt. %	63.17	67.15	68.63	72.24	53.97	75.8
Hydrogen, wt. %	4.25	4.22	4.70	5.08	3.95	5.8
Nitrogen, wt. %	1.27	1.20	0.69	1.15	0.89	1.7
Sulfur, wt. %	1.11	1.45	0.45	0.49	1.04	0.6
Chloride, wt. %	0.02	0.04	0.04	0.02		0.004
Ash, wt. %	11.59	12.92	7.75	8.22	29.22	6.4
Oxygen by Difference, wt. %	18.59	13.02	17.74	12.80	10.93	9.7
Total	100.0	100.0	100.0	100.0	100.0	100.0

APPENDIX B. WATER ANALYSES AND PRECIPITATION AND EVAPORATION RATES

Feed water analyses are required to determine the solid residuals found in the blowdown of process water treatment plants and cooling towers and the need for settling basins. Table B-1 shows the source of feed water for each of the plant-site combinations considered in the assessment. Table B-2 gives the quality of each of the source waters. Unless otherwise indicated, the analyses have been supplied to us by the Radian Corporation, Austin, Texas.*

Precipitation and evaporation data at each of the six sites are presented in Table B-3. These data have been used to estimate the water requirements for dust control on the mine area and haul roads (Section 7.3), supplemental irrigation water required for revegetation (Section 7.8), and the evaporation losses from settling basins (Section 8.8) and reservoirs (Section 8.9).

References

1. "Environmental Impact Report, North Dakota Gasification Project," for ANG Coal Gasification Co., p. 2-244, FPC Docket No. CP75-278, Vol. III, March 5, 1975.

2. Data is weighted average for Bighorn River at Bighorn, Montana (Yellowstone River Basin near Colstrip) from "Quality of Surface Waters of the United States, 1968, Part 6: Missouri River Basin," p. 125, Geological Survey Water-Supply Paper 2098, 1973. Average based onyearly discharge and load.

*Sethness, E.D., private communication.

3. Ibid., p. 65. For Bluewater Creek at Fromberg, Montana based on yearly discharge and load.

4. Ibid., p. 158. For North Platte River at Orin, Wyoming. Time weighted average over year.

5. Weighted average data for Colorado River at Lees Ferry, Arizona taken from "Quality of Surface Waters of the United States, 1968, Parts 9 and 10: Colorado River Basin and the Great Basin," p. 156, Geological Survey Water-Supply Paper 2098, 1973.

6. Ibid., p. 157. Lower value most probable. Upper value time averaged.

7. Data is averaged for San Juan River at Farmington, New Mexico from U.S. Geological Survey, Water Supply Papers No.2015 (1967), 2098 (1968), and 2148 (1969).

8. Data for Colorado River above Grand Valley from "An Environmental Impact Analysis for a Shale Oil Complex at Parachute Creek, Colorado, Part I: Plant Complex and Service Corridor," Table 7, p. 43, Colmy Development Operation, Atlantic Richfield Co., Denver, 1974.

9. Ibid, Appendix 12 (Chemical Water Quality Characteristics of Parachute Creek, p. 29). Straight average of raw data.

10. For Colorado River near Cisco, Utah based onyearly discharge and load. "Quality of Surface Waters of the United States, 1968, Parts 9 and 10: Colorado River Basin and the Great Basin," p. 48, Geological Survey Water-Supply Paper 2098, 1973.

11. According to Weeks, et al., "Simulated Effects of Oil Shale Development on the Hydrology of Piceance Basin, Colorado," U.S. Geological Survey Professional Paper 908, 1974, only tract C-b could supply sufficient ground water from the mine to meet development plans. In this case, 2/3 of discharge is from upper aquifer and 1/3 from lower aquifer. Data given represents 2/3 - 1/3 weighting of mean from upper and lower aquifers as given in Table 6, p. 35 of cited reference.

12. Geraghty, J.H. et al., Water Atlas of the United States, Plate 12, Water Information Center, Inc., Port Washington, New York, 1973.

13. Climates of the States, Vol. II - Western States, p. 757, Water Information Center, Inc., Port Washington, N.Y., 1973.

Table B-1. Source of feed water.

PROCESS	BEULAH, NORTH DAKOTA	COLSTRIP, MONTANA	GILLETTE, WYOMING	KAIPAROWITS/ ESCALANTE, UTAH	NAVAJO/ FARMINGTON, NEW MEXICO	RIFLE, COLORADO
SLURRY PIPELINE			North Platte River			
LURGI GAS	Lake Sakakawea	Yellowstone River	Yellowstone River		San Juan River	
SYNTHANE GAS	Lake Sakakawea	Yellowstone River	Yellowstone River		San Juan River	
SYNTHOIL GAS	Lake Sakakawea	Yellowstone River	North Platte River		San Juan River	
ELECTRICAL GENERATION 3000 MWe 1000 MWe	Lake Sakakawea	Yellowstone River	Yellowstone River	Lake Powell	San Juan River	White River
OIL SHALE 50,000 bbl/day 100,000 bbl/day						Colorado River Groundwater

Table B-2. Source water quality.

	BEULAH, NORTH DAKOTA	COLSTRIP, MONTANA	GILLETTE, WYOMING	GILLETTE, WYOMING	KAIPAROWITS/ ESCALANTE, UTAH	NAVAJO/ FARMINGTON, NEW MEXICO	RIFLE, COLORADO	RIFLE, COLORADO	RIFLE, COLORADO
	Lake Sakakawea	Yellowstone River	Yellowstone River	North Platte River	Lake Powell	San Juan River	White River	Colorado River	Ground-Water
Dissolved Calcium (mg/ℓ as $CaCO_3$)	123	99	115	153	213	138	99	158	115
Dissolved Magnesium (mg/ℓ as $CaCO_3$)	78	56	66	82	122	37	35	53	41
Dissolved Sodium (mg/ℓ as $CaCO_3$)	129	75	98	109	205	68	19	205	3198
Dissolved Chloride (mg/ℓ as $CaCO_3$)	13	8	10	17	99	12	13	168	666
Dissolved Bicarbonate (mg/ℓ as $CaCO_3$)	148	113	131	139	149	117	93	118	2788
Dissolved Sulfate (mg/ℓ as $CaCO_3$)	177	113	148	197	292	118	47	134	250
Dissolved Silica (mg/ℓ)	7	10	12	10	10 [5]	12 [7]	10	12 [9]	
Total Dissolved Solids (mg/ℓ)	428	284	364	414	677	300	181	454	3773
Suspended Sediment (mg/ℓ)	2 [1]	365 [2]	371 [3]	320 [4]	5-15 [6]	278	663	2087 [10]	
Hardness (mg/ℓ as $CaCO_3$)	201	155	181	235	335	175	134	211	156
pH Units	8.1	8.2	7.7	8.2	7.6	7.8	8.0	8.0	

Table B-3. Precipitation and evaporation data (inches/year).

	BEULAH, NORTH DAKOTA	COLSTRIP, MONTANA	GILLETTE, WYOMING	KAIPAROWITS/ ESCALANTE, UTAH	NAVAJO/ FARMINGTON, NEW MEXICO	RIFLE, COLORADO
Precipitation	15 [1]	14 [13]	14 [14]	8 [15]	8 [16]	12 [17]
Lake Evaporation Rate (70% Pan)	35 [12]	38 [12]	42 [14]	54 [12]	47.5 [12]	35 [12]
Pond Evaporation Rate (90% Pan)	45	49	54	69	61	45
Pan Evaporation Rate	50	54	60	77	68	50

APPENDIX C. LOAD FACTORS

A load factor for a plant is defined as the percentage of time that a plant is on-stream throughout the year. The load factor for each of the unit size mine-plant complexes is given in Table C-1.[1] Throughout this report rate quantities are specified based on either a "stream" time unit or a "calendar" time unit; for example, gallons per stream minute or gallons per calendar minute. The ratio of a calendar time to a stream time is the load factor. For example, for a plant having a load factor of 90%, 10 gallons per stream minute = 9 gallons per calendar minute. All rate quantities based on a calendar time unit can be converted to a yearly basis by multiplying the quantity by 365 days, or 365 × 24 = 8760 hours, or 365 × 24 × 60 = 525,600 minutes. For example, 10 gallons per calendar minute = 5,256,000 gallons per year. The year as a time unit is a calendar time unit.

Reference

1. Raye, T.D., Memorandum to J. White, Radian Corporation, Austin, Texas, April 26, 1976.

Table C-1. Load factors.

	Load Factor
Slurry Pipeline	100%
Lurgi	90%
Synthane	90%
Synthoil	90%
Steam-Electric Generation	70%
Oil Shale	90%

APPENDIX D. TOTAL WATER CONSUMED AND RESIDUALS GENERATED FOR THREE ENERGY SCENARIOS BY STATE AND COUNTY

Reference 1 establishes the temporal and spatial regional scenarios for levels of western energy development used in this assessment. The scenarios are based on the Stanford Research Institute energy model with nominal end-use demand, low end-use demand, and low nuclear availability cases. The regional scenarios focus on the Powder River Region, which includes the states of Montana, North Dakota, and Wyoming; and the Rocky Mountain Region, which includes the states of Colorado, New Mexico, and Utah. Further disaggregation of regional facilities to Counties within the States was performed on the basis of published resources. For each level of western energy development and for each region, the time frames considered are the years 1980, 1985, 1990, and 2000. The total water consumed and residuals generated by State and County are presented in this appendix.

The results of the regional scenarios are based on the results of the site-specific scenario calculations presented in Section 10. The total water consumed and residuals generated for each plant-County combination given in Ref. 1 were the same as for one of the (site - specific) plant-site combinations considered in Section 10. A plant-County combination was matched to a plant-site combination on the basis of coal type, water source, and climate. We found the base quantities to be the same for all Counties considered within a given

State. Table D-1 shows the base quantities used to calculate the total water consumed and wet-solids residuals generated by State for the unit size mine-plant complexes shown in the table.

Table D-2 shows the page number on which the results for specific scenarios are presented in this appendix.

Reference

1. Conine, W.D., "Regional Scenario Definitions for Levels of Western Energy Development Corresponding to Nominal Demand, Low Demand, and Nuclear Moratorium Assumptions," Radian Corporation, Report No. 100-090-07-01, Austin, Texas, June 22, 1976.

Table D-1. Base quantities assumed for water consumed and residuals generated for standard size plants in each state of western region.††

STATE	SLURRY PIPELINE 25 x 10^6 tons/yr @ 100% load factor		LURGI GAS 250 x 10^6 scf/stream day @ 90% load factor		SYNTHANE GAS 250 x 10^6 scf/stream day @ 90% load factor		SYNTHOIL 100,000 bbl/stream day @ 90% load factor		ELECTRICAL GENERATION 3,000 MWe @ 35% eff and 70% load factor		OIL SHALE 100,000 bbl/stream day @ 90% load factor	
	ACRE-FT/YR*	WET SOLIDS† 10^6 TON/YR	ACRE-FT/YR*	WET SOLIDS† 10^6 TON/YR	ACRE-FT/YR*	WET SOLIDS† 10^6 TON/YR	ACRE-FT/YR*	WET SOLIDS† 10^6 TON/YR	ACRE-FT/YR*	WET SOLIDS† 10^6 TON/YR	ACRE-FT/YR*	WET SOLIDS† 10^6 TON/YR
MONTANA	19,171	--	4,618	1.27	7,808	1.12	10,296	2.07	26,659	3.01		
NORTH DAKOTA			3,307	1.20	7,671	1.08	10,085	2.00	23,884	2.65		
WYOMING	19,171	--	4,206	0.72	7,776	0.71	9,227	1.23	25,842	1.32		
COLORADO	19,171	--							28,482	1.14	12,924	40.81
NEW MEXICO			5,639	3.00	8,670	2.84	11,753	5.31	29,206	5.00		
UTAH									29,816	5.30	12,924	40.81

* Water Consumed
† Residuals
†† These quantities for each State are the unit values used in each energy scenario. For example, if the scenario were to have three (3) Lurgi plants in Montana and two in Wyoming the Lurgi water requirements would be 3 x 4,618 acre-ft/yr in Montana and 2 x 4,206 acre-ft/yr in Wyoming.

Table D-2. Location of results for specific scenarios by region, energy demand, and year.

	Page Number	
	Rocky Mountain Region	Powder River Region
Nominal Demand		
1980	221	233
1985	222	234
1990	223	235
2000	224	236
Low Demand		
1980	225	237
1985	226	238
1990	227	239
2000	228	240
Low Nuclear Availability		
1980	229	241
1985	230	242
1990	231	243
2000	232	244

CASE NOMINAL DEMAND

FACILITIES SITED IN ROCKY MOUNTAINS REGION BY 1980 (AFTER 1975)

STATE/COUNTY	SLURRY PIPELINE		LURGI GAS		SYNTHALI GAS		SYNTHOIL		ELECTRICAL GENERATION		OIL SHALE	
	ACRE-FT/YR*	WET SOLIDS† 10^6 TON/YR	ACRE-FT/YR*	WET SOLIDS† 10^6 TON/YR	ACRE-FT/YR*	WET SOLIDS† 10^6 TON/YR	ACRE-FT/YR*	WET SOLIDS† 10^6 TON/YR	ACRE-FT/YR*	WET SOLIDS† 10^6 TON/YR	ACRE-FT/YR*	WET SOLIDS† 10^6 TON/YR
ARIZONA												
COLORADO												
Huerfano												
Rio Blanco												
Garfield												
TOTAL												
NEW MEXICO												
San Juan									29,206	5.00		
Lea												
Roosevelt												
Chaves												
Eddy												
TOTAL									29,206	5.00		
UTAH												
Garfield												
Kane									29,816	5.30		
Uintah												
TOTAL									29,816	5.30		

* Water Consumed
† Residuals

CASE NOMINAL DEMAND

FACILITIES SITED IN ROCKY MOUNTAINS REGION BY 1985 (AFTER 197!

STATE/COUNTY	SLURRY PIPELINE		LURGI GAS		SYNTHANE GAS		SYNTHOIL		ELECTRICAL GENERATION		OIL SHALE	
	ACRE-FT/YR*	WET SOLIDS† 10^6 TON/YR	ACRE-FT/YR*	WET SOLIDS† 10^6 TON/YR	ACRE-FT/YR*	WET SOLIDS† 10^6 TON/YR	ACRE-FT/YR*	WET SOLIDS† 10^6 TON/YR	ACRE-FT/YR*	WET SOLIDS† 10^6 TON/YR	ACRE-FT/YR*	WET SOLIDS† 10^6 TON/YR
ARIZONA												
COLORADO												
Huerfano	19,171	-										
Rio Blanco									28,482	1.14	25,848	81.62
Garfield												
TOTAL	19,171	-							28,482	1.14	25,848	81.62
NEW MEXICO												
San Juan									29,206	5.00		
Lea												
Roosevelt												
Chaves												
Eddy												
TOTAL									29,206	5.00		
UTAH												
Garfield												
Kane									29,816	5.30		
Uintah												
TOTAL									29,816	5.30		

* Water Consumed
† Residuals

CASE NOMINAL DEMAND

FACILITIES SITED IN ROCKY MOUNTAINS REGION BY 1990 (AFTER 1975)

STATE/COUNTY	SLURRY PIPELINE		LURGI GAS		SYNTHA.E GAS		SYNTHOIL		ELECTRICAL GENERATION		OIL SHALE	
	ACRE-FT/YR*	WET SOLIDS† 10^6 TON/YR	ACRE-FT/YR*	WET SOLIDS† 10^6 TON/YR	ACRE-FT/YR*	WET SOLIDS† 10^6 TON/YR	ACRE-FT/YR*	WET SOLIDS† 10^6 TON/YR	ACRE-FT/YR*	WET SOLIDS† 10^6 TON/YR	ACRE-FT/YR*	WET SOLIDS† 10^6 TON/YR
ARIZONA												
COLORADO												
Huerfano	19,171	-										
Rio Blanco									28,482	1.14	51,696	163.24
Garfield											12,924	40.81
TOTAL	19,171	-							28,482	1.14	64,620	204.05
NEW MEXICO												
San Juan									29,206	5.00		
Lea												
Roosevelt												
Chaves												
Eddy												
TOTAL									29,206	5.00		
UTAH												
Garfield									29,816	5.30		
Kane									29,816	5.30		
Uintah												
TOTAL									59,632	10.60		

* Water Consumed
† Residuals

CASE NOMINAL DEMAND

FACILITIES SITED IN ROCKY MOUNTAINS REGION BY 2000 (AFTER 1975)

STATE/COUNTY	SLURRY PIPELINE		LURGI GAS		SYNTHANE GAS		SYNTHOIL		ELECTRICAL GENERATION		OIL SHALE	
	ACRE-FT/YR*	WET SOLIDS† 10^6 TON/YR	ACRE-FT/YR*	WET SOLIDS† 10^6 TON/YR	ACRE-FT/YR*	WET SOLIDS† 10^6 TON/YR	ACRE-FT/YR*	WET SOLIDS† 10^6 TON/YR	ACRE-FT/YR*	WET SOLIDS† 10^6 TON/YR	ACRE-FT/YR*	WET SOLIDS† 10^6 TON/YR
ARIZONA												
COLORADO												
Huerfano	19,171	-										
Rio Blanco									28,482	1.14	336,024	1,061.06
Garfield											155,088	489.72
TOTAL	19,171	-							28,482	1.14	491,112	1,550.78
NEW MEXICO												
San Juan			5,639	3.00	8,670	2.84			29,206	5.00		
Lea												
Roosevelt												
Chaves												
Eddy												
TOTAL			5,639	3.00	8,670	2.84			29,206	5.00		
UTAH												
Garfield									29,816	5.30		
Kane									29,816	5.30		
Uintah											51,696	163.24
TOTAL									59,632	10.60	51,696	163.24

* Water Consumed
† Residuals

CASE LOW DEMAND

FACILITIES SITED IN ROCKY MOUNTAINS REGION BY 1980 (AFTER 1975)

STATE/COUNTY	SLURRY PIPELINE		LURGI GAS		SYNTHANE GAS		SYNTHOIL		ELECTRICAL GENERATION		OIL SHALE	
	ACRE-FT/YR*	WET SOLIDS† 10^6 TON/YR	ACRE-FT/YR*	WET SOLIDS† 10^6 TON/YR	ACRE-FT/YR*	WET SOLIDS† 10^6 TON/YR	ACRE-FT/YR*	WET SOLIDS† 10^6 TON/YR	ACRE-FT/YR*	WET SOLIDS† 10^6 TON/YR	ACRE-FT/YR*	WET SOLIDS† 10^6 TON/YR
ARIZONA												
COLORADO												
Huerfano												
Rio Blanco												
Garfield												
TOTAL												
NEW MEXICO												
San Juan												
Lea												
Roosevelt												
Chaves												
Eddy												
TOTAL												
UTAH												
Garfield												
Kane									29,816	5.30		
Uintah												
TOTAL									29,816	5.30		

* Water Consumed
† Residuals

CASE LOW DEMAND

FACILITIES SITED IN ROCKY MOUNTAINS REGION BY 1985 (AFTER 1975)

STATE/COUNTY	SLURRY PIPELINE		LURGI GAS		SYNTHANE GAS		SYNTHOIL		ELECTRICAL GENERATION		OIL SHALE	
	ACRE-FT/YR*	WET SOLIDS† 10^6 TON/YR	ACRE-FT/YR*	WET SOLIDS† 10^6 TON/YR	ACRE-FT/YR*	WET SOLIDS† 10^6 TON/YR	ACRE-FT/YR*	WET SOLIDS† 10^6 TON/YR	ACRE-FT/YR*	WET SOLIDS† 10^6 TON/YR	ACRE-FT/YR*	WET SOLIDS† 10^6 TON/YR
ARIZONA												
COLORADO												
Huerfano	19,171	-										
Rio Blanco											25,848	81.62
Garfield												
TOTAL	19,171	-									25,848	81.62
NEW MEXICO												
San Juan									29,206	5.00		
Lea												
Roosevelt												
Chaves												
Eddy												
TOTAL									29,206	5.00		
UTAH												
Garfield												
Kane									29,816	5.30		
Uintah												
TOTAL									29,816	5.30		

* Water Consumed
† Residuals

CASE LOW DEMAND

FACILITIES SITED IN ROCKY MOUNTAINS REGION BY 1990 (AFTER 1975)

STATE/COUNTY	SLURRY PIPELINE		LURGI GAS		SYNTHANE GAS		SYNTHOIL		ELECTRICAL GENERATION		OIL SHALE	
	ACRE-FT/YR*	WET SOLIDS† 10^6 TON/YR	ACRE-FT/YR*	WET SOLIDS† 10^6 TON/YR	ACRE-FT/YR*	WET SOLIDS† 10^6 TON/YR	ACRE-FT/YR*	WET SOLIDS† 10^6 TON/YR	ACRE-FT/YR*	WET SOLIDS† 10^6 TON/YR	ACRE-FT/YR*	WET SOLIDS† 10^6 TON/YR
ARIZONA												
COLORADO												
Huerfano	19,171	-										
Rio Blanco											51,696	163.24
Garfield											12,924	40.81
TOTAL	19,171	-									64,620	204.05
NEW MEXICO												
San Juan									29,206	5.00		
Lea												
Roosevelt												
Chaves												
Eddy												
TOTAL									29,206	5.00		
UTAH												
Garfield												
Kane									29,816	5.30		
Uintah												
TOTAL									29,816	5.30		

* Water Consumed
† Residuals

CASE LOW DEMAND

FACILITIES SITED IN ROCKY MOUNTAINS REGION BY 2000 (AFTER 1975)

STATE/COUNTY	SLURRY PIPELINE		LURGI GAS		SYNTHANE GAS		SYNTHOIL		ELECTRICAL GENERATION		OIL SHALE	
	ACRE-FT/YR*	WET SOLIDS† 10^6 TON/YR	ACRE-FT/YR*	WET SOLIDS† 10^6 TON/YR	ACRE-FT/YR*	WET SOLIDS† 10^6 TON/YR	ACRE-FT/YR*	WET SOLIDS† 10^6 TON/YR	ACRE-FT/YR*	WET SOLIDS† 10^6 TON/YR	ACRE-FT/YR*	WET SOLIDS† 10^6 TON/YR
ARIZONA												
COLORADO												
Huerfano	19,171	-										
Rio Blanco											271,404	857.01
Garfield											142,164	448.91
TOTAL	19,171	-									413,568	1,305.92
NEW MEXICO												
San Juan			5,639	3.00					29,206	5.00		
Lea												
Roosevelt												
Chaves												
Eddy												
TOTAL			5,639	3.00					29,206	5.00		
UTAH												
Garfield												
Kane									29,816	5.30		
Uintah											38,772	122.43
TOTAL									29,816	5.30	38,772	122.43

* Water Consumed
† Residuals

CASE LOW NUCLEAR AVAILABILITY

FACILITIES SITED IN ROCKY MOUNTAINS REGION BY 1980 (AFTER 1975)

STATE/COUNTY	SLURRY PIPELINE		LURGI GAS		SYNTHANE GAS		SYNTHOIL		ELECTRICAL GENERATION		OIL SHALE	
	ACRE-FT/YR*	WET SOLIDS† 10^6 TON/YR	ACRE-FT/YR*	WET SOLIDS† 10^6 TON/YR	ACRE-FT/YR*	WET SOLIDS† 10^6 TON/YR	ACRE-FT/YR*	WET SOLIDS† 10^6 TON/YR	ACRE-FT/YR*	WET SOLIDS† 10^6 TON/YR	ACRE-FT/YR*	WET SOLIDS† 10^6 TON/YR
ARIZONA												
COLORADO												
Huerfano												
Rio Blanco												
Garfield												
TOTAL												
NEW MEXICO												
San Juan									29,206	5.00		
Lea												
Roosevelt												
Chaves												
Eddy												
TOTAL									29,206	5.00		
UTAH												
Garfield												
Kane									29,816	5.30		
Uintah												
TOTAL									29,816	5.30		

* Water Consumed
† Residuals

CASE LOW NUCLEAR AVAILABILITY

FACILITIES SITED IN ROCKY MOUNTAINS REGION BY 1985 (AFTER 1975)

STATE/COUNTY	SLURRY PIPELINE		LURGI GAS		SYNTHANE GAS		SYNTHOIL		ELECTRICAL GENERATION		OIL SHALE	
	ACRE-FT/YR*	WET SOLIDS† 10^6 TON/YR	ACRE-FT/YR*	WET SOLIDS† 10^6 TON/YR	ACRE-FT/YR*	WET SOLIDS† 10^6 TON/YR	ACRE-FT/YR*	WET SOLIDS† 10^6 TON/YR	ACRE-FT/YR*	WET SOLIDS† 10^6 TON/YR	ACRE-FT/YR*	WET SOLIDS† 10^6 TON/YR
ARIZONA												
COLORADO												
Huerfano	19,171	-										
Rio Blanco									28,482	1.14	25,848	81.62
Garfield												
TOTAL	19,171	-							28,482	1.14	25,848	81.62
NEW MEXICO												
San Juan									58,412	10.00		
Lea												
Roosevelt												
Chaves												
Eddy												
TOTAL									58,412	10.00		
UTAH												
Garfield									29,816	5.30		
Kane									29,816	5.30		
Uintah												
TOTAL									59,632	10.60		

* Water Consumed
† Residuals

CASE LOW NUCLEAR AVAILABILITY

FACILITIES SITED IN ROCKY MOUNTAINS REGION BY 1990 (AFTER 1975)

STATE/COUNTY	SLURRY PIPELINE		LURGI GAS		SYNTHANE GAS		SYNTHOIL		ELECTRICAL GENERATION		OIL SHALE	
	ACRE-FT/YR*	WET SOLIDS† 10^6 TON/YR	ACRE-FT/YR*	WET SOLIDS† 10^6 TON/YR	ACRE-FT/YR*	WET SOLIDS† 10^6 TON/YR	ACRE-FT/YR*	WET SOLIDS† 10^6 TON/YR	ACRE-FT/YR*	WET SOLIDS† 10^6 TON/YR	ACRE-FT/YR*	WET SOLIDS† 10^6 TON/YR
ARIZONA												
COLORADO												
Huerfano	19,171	-										
Rio Blanco									28,482	1.14	51,696	163.24
Garfield												
TOTAL	19,171	-							28,482	1.14	51,696	163.24
NEW MEXICO												
San Juan									58,412	10.00		
Lea												
Roosevelt												
Chaves												
Eddy												
TOTAL									58,412	10.00		
UTAH												
Garfield									59,632	10.60		
Kane									29,816	5.30		
Uintah												
TOTAL									89,448	15.90		

* Water Consumed
† Residuals

CASE: LOW NUCLEAR AVAILABILITY

FACILITIES SITED IN ROCKY MOUNTAINS REGION BY 2000 (AFTER 1975)

STATE/COUNTY	SLURRY PIPELINE		LURGI GAS		SYNTHANE GAS		SYNTHOIL		ELECTRICAL GENERATION		OIL SHALE	
	ACRE-FT/YR*	WET SOLIDS† 10^6 TON/YR	ACRE-FT/YR*	WET SOLIDS† 10^6 TON/YR	ACRE-FT/YR*	WET SOLIDS† 10^6 TON/YR	ACRE-FT/YR*	WET SOLIDS† 10^6 TON/YR	ACRE-FT/YR*	WET SOLIDS† 10^6 TON/YR	ACRE-FT/YR*	WET SOLIDS† 10^6 TON/YR
ARIZONA												
COLORADO												
Huerfano	38,342	-										
Rio Blanco									28,482	1.14	323,100	1,020.25
Garfield									28,482	1.14	155,088	489.72
TOTAL	38,342	-							56,964	2.28	478,188	1,509.97
NEW MEXICO												
San Juan			5,639	3.00	8,670	2.84			87,618	15.00		
Lea												
Roosevelt												
Chaves												
Eddy												
TOTAL			5,639	3.00	8,670	2.84			87,618	15.00		
UTAH												
Garfield									59,632	10.60		
Kane									59,632	10.60		
Uintah											51,696	163.24
TOTAL									119,264	21.20	51,696	163.24

* Water Consumed
† Residuals

CASE NOMINAL DEMAND

FACILITIES SITED IN POWDER RIVER REGION BY 1980 (AFTER 1975)

STATE/COUNTY	SLURRY PIPELINE		LURGI GAS		SYNTHANE GAS		SYNTHOIL		ELECTRICAL GENERATION		OIL SHALE	
	ACRE-FT/YR*	WET SOLIDS† 10^6 TON/YR	ACRE-FT/YR*	WET SOLIDS† 10^6 TON/YR	ACRE-FT/YR*	WET SOLIDS† 10^6 TON/YR	ACRE-FT/YR*	WET SOLIDS† 10^6 TON/YR	ACRE-FT/YR*	WET SOLIDS† 10^6 TON/YR	ACRE-FT/YR*	WET SOLIDS† 10^6 TON/YR
MONTANA												
Powder River												
Big Horn									26,659	3.01		
Rosebud									26,659	3.01		
Custer												
Wibaux												
Richland												
McCone												
TOTAL									53,318	6.02		
NORTH DAKOTA												
Billings												
Bowman												
Dunn									23,884	2.65		
Hettinger												
McKenzie												
McLean												
Mercer									23,884	2.65		
Morton												
Oliver												
Slope												
Stark												
Ward												
Williams												
TOTAL									47,768	5.30		
WYOMING												
Campbell	19,171	-							25,842	1.32		
Johnson												
Sheridan												
TOTAL	19,171	-							25,842	1.32		

* Water Consumed
† Residuals

CASE NOMINAL DEMAND

FACILITIES SITED IN POWDER RIVER REGION BY 1985 (AFTER 1975)

STATE/COUNTY	SLURRY PIPELINE		LURGI GAS		SYNTHANE GAS		SYNTHOIL		ELECTRICAL GENERATION		OIL SHALE	
	ACRE-FT/YR*	WET SOLIDS† 10^6 TON/YR	ACRE-FT/YR*	WET SOLIDS† 10^6 TON/YR	ACRE-FT/YR*	WET SOLIDS† 10^6 TON/YR	ACRE-FT/YR*	WET SOLIDS† 10^6 TON/YR	ACRE-FT/YR*	WET SOLIDS† 10^6 TON/YR	ACRE-FT/YR*	WET SOLIDS† 10^6 TON/YR
MONTANA												
Powder River	19,171	-							53,318	6.02		
Big Horn	19,171	-							26,659	3.01		
Rosebud	19,171	-							26,659	3.01		
Custer												
Wibaux												
Richland												
McCone												
TOTAL	57,513	-							106,636	12.04		
NORTH DAKOTA												
Billings												
Bowman												
Dunn									23,884	2.65		
Hettinger												
McKenzie									23,884	2.65		
McLean									23,884	2.65		
Mercer									23,884	2.65		
Morton												
Oliver												
Slope									23,884	2.65		
Stark												
Ward												
Williams												
TOTAL									119,420	13.25		
WYOMING												
Campbell	19,171	-							51,684	2.64		
Johnson												
Sheridan												
TOTAL	19,171	-							51,684	2.64		

* Water Consumed
† Residuals

CASE NOMINAL DEMAND

FACILITIES SITED IN POWDER RIVER REGION BY 1990 (AFTER 1975)

STATE/COUNTY	SLURRY PIPELINE		LURGI GAS		SYNTHANE GAS		SYNTHOIL		ELECTRICAL GENERATION		OIL SHALE	
	ACRE-FT/YR*	WET SOLIDS† 10^6 TON/YR	ACRE-FT/YR*	WET SOLIDS† 10^6 TON/YR	ACRE-FT/YR*	WET SOLIDS† 10^6 TON/YR	ACRE-FT/YR*	WET SOLIDS† 10^6 TON/YR	ACRE-FT/YR*	WET SOLIDS† 10^6 TON/YR	ACRE-FT/YR*	WET SOLIDS† 10^6 TON/YR
MONTANA												
Powder River	38,342	-							53,318	6.02		
Big Horn	19,171	-							53,318	6.02		
Rosebud	19,171	-	4,618	1.27					26,659	3.01		
Custer												
Wibaux												
Richland												
McCone												
TOTAL	76,684	-	4,618	1.27					133,295	15.05		
NORTH DAKOTA												
Billings									23,884	2.65		
Bowman												
Dunn			3,307	1.20					23,884	2.65		
Hettinger												
McKenzie									23,884	2.65		
McLean									23,884	2.65		
Mercer			3,307	1.20					23,884	2.65		
Morton												
Oliver												
Slope									23,884	2.65		
Stark												
Ward												
Williams												
TOTAL			6,614	2.40					143,304	15.90		
WYOMING												
Campbell	38,342	-							51,684	2.64		
Johnson												
Sheridan												
TOTAL	38,342	-							51,684	2.64		

* Water Consumed
† Residuals

CASE NOMINAL DEMAND

FACILITIES SITED IN POWDER RIVER REGION BY 2000 (AFTER 1975)

STATE/COUNTY	SLURRY PIPELINE		LURGI GAS		SYNTHANE GAS		SYNTHOIL		ELECTRICAL GENERATION		OIL SHALE	
	ACRE-FT/YR*	WET SOLIDS† 10^6 TON/YR	ACRE-FT/YR*	WET SOLIDS† 10^6 TON/YR	ACRE-FT/YR*	WET SOLIDS† 10^6 TON/YR	ACRE-FT/YR*	WET SOLIDS† 10^6 TON/YR	ACRE-FT/YR*	WET SOLIDS† 10^6 TON/YR	ACRE-FT/YR*	WET SOLIDS† 10^6 TON/YR
MONTANA												
Powder River	76,684	-	18,472	5.08	15,616	2.24			53,318	6.02		
Big Horn	76,684	-	13,854	3.81	15,616	2.24	5,148	1.04	53,318	6.02		
Rosebud	57,513	-	13,854	3.81	7,808	1.12			53,318	6.02		
Custer												
Wibaux												
Richland												
McCone												
TOTAL	210,881	-	46,180	12.70	39,040	5.60	5,148	1.04	159,954	18.06		
NORTH DAKOTA												
Billings			3,307	1.20	7,671	1.08			23,884	2.65		
Bowman			3,307	1.20								
Dunn			6,614	2.40	7,671	1.08	10,085	2.00	47,768	5.30		
Hettinger			3,307	1.20								
McKenzie			3,307	1.20					23,884	2.65		
McLean			6,614	2.40					47,768	5.30		
Mercer			6,614	2.40	15,342	2.16			47,768	5.30		
Morton												
Oliver			3,307	1.20					23,884	2.65		
Slope					15,342	2.16						
Stark			6,614	2.40								
Ward												
Williams			3,307	1.20	7,671	1.08						
TOTAL			46,298	16.80	53,697	7.56	10,085	2.00	214,956	23.85		
WYOMING												
Campbell	76,684	-	16,824	2.88	15,552	1.42			51,684	2.64		
Johnson	19,171	-	4,206	0.72	7,776	0.71						
Sheridan	19,171	-	4,206	0.72					25,841	1.32		
TOTAL	115,026	-	25,236	4.32	23,328	2.13			77,525	3.96		

* Water Consumed
† Residuals

CASE LOW DEMAND

FACILITIES SITED IN POWDER RIVER REGION BY 1980 (AFTER 1975)

STATE/COUNTY	SLURRY PIPELINE		LURGI GAS		SYNTHANE GAS		SYNTHOIL		ELECTRICAL GENERATION		OIL SHALE	
	ACRE-FT/YR*	WET SOLIDS† 10^6 TON/YR	ACRE-FT/YR*	WET SOLIDS† 10^6 TON/YR	ACRE-FT/YR*	WET SOLIDS† 10^6 TON/YR	ACRE-FT/YR*	WET SOLIDS† 10^6 TON/YR	ACRE-FT/YR*	WET SOLIDS† 10^6 TON/YR	ACRE-FT/YR*	WET SOLIDS† 10^6 TON/YR
MONTANA												
Powder River									26,659	3.01		
Big Horn												
Rosebud												
Custer												
Wibaux												
Richland												
McCone												
TOTAL									26,659	3.01		
NORTH DAKOTA												
Billings												
Bowman												
Dunn									23,884	2.65		
Hettinger												
McKenzie												
McLean									23,884	2.65		
Mercer												
Morton												
Oliver												
Slope												
Stark												
Ward												
Williams												
TOTAL									47,768	5.30		
WYOMING												
Campbell	19,171	-							25,842	1.32		
Johnson												
Sheridan												
TOTAL	19,171	-							25,842	1.32		

* Water Consumed
† Residuals

CASE LOW DEMAND

FACILITIES SITED IN POWDER RIVER REGION BY 1985 (AFTER 1975)

STATE/COUNTY	SLURRY PIPELINE		LURGI GAS		SYNTHANE GAS		SYNTHOIL		ELECTRICAL GENERATION		OIL SHALE	
	ACRE-FT/YR*	WET SOLIDS† 10^6 TON/YR	ACRE-FT/YR*	WET SOLIDS† 10^6 TON/YR	ACRE-FT/YR*	WET SOLIDS† 10^6 TON/YR	ACRE-FT/YR*	WET SOLIDS† 10^6 TON/YR	ACRE-FT/YR*	WET SOLIDS† 10^6 TON/YR	ACRE-FT/YR*	WET SOLIDS† 10^6 TON/YR
MONTANA												
Powder River	19,171	-							26,659	3.01		
Big Horn	19,171	-							26,659	3.01		
Rosebud									26,659	3.01		
Custer												
Wibaux												
Richland												
McCone												
TOTAL	38,342	-							79,977	9.03		
NORTH DAKOTA												
Billings												
Bowman												
Dunn									23,884	2.65		
Hettinger												
McKenzie												
McLean									23,884	2.65		
Mercer									23,884	2.65		
Morton												
Oliver												
Slope									23,884	2.65		
Stark												
Ward												
Williams												
TOTAL									95,536	10.60		
WYOMING												
Campbell	19,171	-							51,684	2.64		
Johnson												
Sheridan												
TOTAL	19,171	-							51,684	2.64		

* Water Consumed
† Residuals

CASE LOW DEMAND

FACILITIES SITED IN POWDER RIVER REGION BY 1990 (AFTER 1975)

STATE/COUNTY	SLURRY PIPELINE		LURGI GAS		SYNTHANE GAS		SYNTHOIL		ELECTRICAL GENERATION		OIL SHALE	
	ACRE-FT/YR*	WET SOLIDS† 10^6 TON/YR	ACRE-FT/YR*	WET SOLIDS† 10^6 TON/YR	ACRE-FT/YR*	WET SOLIDS† 10^6 TON/YR	ACRE-FT/YR*	WET SOLIDS† 10^6 TON/YR	ACRE-FT/YR*	WET SOLIDS† 10^6 TON/YR	ACRE-FT/YR*	WET SOLIDS† 10^6 TON/YR
MONTANA												
Powder River	19,171	-							26,659	3.01		
Big Horn	19,171	-							26,659	3.01		
Rosebud	19,171	-							26,659	3.01		
Custer												
Wibaux												
Richland												
McCone												
TOTAL	57,513	-							79,977	9.03		
NORTH DAKOTA												
Billings												
Bowman												
Dunn			3,307	1.20					23,884	2.65		
Hettinger												
McKenzie												
McLean									23,884	2.65		
Mercer			3,307	1.20					23,884	2.65		
Morton												
Oliver												
Slope									23,884	2.65		
Stark												
Ward												
Williams												
TOTAL			6,614	2.40					95,536	10.60		
WYOMING												
Campbell	38,342	-							51,684	2.64		
Johnson												
Sheridan									25,842	1.32		
TOTAL	38,342	-							77,526	3.96		

* Water Consumed
† Residuals

CASE LOW DEMAND

FACILITIES SITED IN POWDER RIVER REGION BY 2000 (AFTER 1975)

STATE/COUNTY	SLURRY PIPELINE		LURGI GAS		SYNTHALE GAS		SYNTHOIL		ELECTRICAL GENERATION		OIL SHALE	
	ACRE-FT/YR*	WET SOLIDS† 10^6 TON/YR	ACRE-FT/YR*	WET SOLIDS† 10^6 TON/YR	ACRE-FT/YR*	WET SOLIDS† 10^6 TON/YR	ACRE-FT/YR*	WET SOLIDS† 10^6 TON/YR	ACRE-FT/YR*	WET SOLIDS† 10^6 TON/YR	ACRE-FT/YR*	WET SOLIDS† 10^6 TON/YR
MONTANA												
Powder River	57,513	-	13,854	3.81	7,808	1.12			53,318	6.02		
Big Horn	57,513	-	9,236	2.54	7,808	1.12	10,296	2.07	53,318	6.02		
Rosebud	57,513	-	4,618	1.27	7,808	1.12			26,659	3.01		
Custer												
Wibaux												
Richland												
McCone												
TOTAL	172,539	-	27,708	7.62	23,424	3.36	10,296	2.07	133,295	15.05		
NORTH DAKOTA												
Billings			3,307	1.20	7,671	1.08			23,884	2.65		
Bowman												
Dunn			3,307	1.20	7,671	1.08			23,884	2.65		
Hettinger			3,307	1.20								
McKenzie									23,884	2.65		
McLean			3,307	1.20					23,884	2.65		
Mercer			3,307	1.20	7,671	1.08			23,884	2.65		
Morton												
Oliver			3,307	1.20								
Slope					7,671	1.08			23,884	2.65		
Stark			3,307	1.20								
Ward												
Williams			3,307	1.20	7,671	1.08						
TOTAL			26,456	9.60	38,355	5.40			143,304	15.90		
WYOMING												
Campbell	38,342	-	8,412	1.44	7,776	0.71	9,227	1.23	51,684	2.64		
Johnson	19,171	-	4,206	0.72	7,776	0.71						
Sheridan	19,171	-							25,842	1.32		
TOTAL	76,684	-	12,618	2.16	15,552	1.42	9,227	1.23	77,526	3.96		

* Water Consumed
† Residuals

CASE LOW NUCLEAR AVAILABILITY

FACILITIES SITED IN POWDER RIVER REGION BY 1980 (AFTER 1975)

STATE/COUNTY	SLURRY PIPELINE		LURGI GAS		SYNTHANE GAS		SYNTHOIL		ELECTRICAL GENERATION		OIL SHALE	
	ACRE-FT/YR*	WET SOLIDS† 10^6 TON/YR	ACRE-FT/YR*	WET SOLIDS† 10^6 TON/YR	ACRE-FT/YR*	WET SOLIDS† 10^6 TON/YR	ACRE-FT/YR*	WET SOLIDS† 10^6 TON/YR	ACRE-FT/YR*	WET SOLIDS† 10^6 TON/YR	ACRE-FT/YR*	WET SOLIDS† 10^6 TON/YR
MONTANA												
Powder River												
Big Horn									26,659	3.01		
Rosebud									26,659	3.01		
Custer												
Wibaux												
Richland												
McCone												
TOTAL									53,318	6.02		
NORTH DAKOTA												
Billings												
Bowman												
Dunn									23,884	2.65		
Hettinger												
McKenzie												
McLean												
Mercer									23,884	2.65		
Morton												
Oliver												
Slope												
Stark												
Ward												
Williams												
TOTAL									47,768	5.30		
WYOMING												
Campbell	19,171	-							51,684	2.64		
Johnson												
Sheridan												
TOTAL	19,171	-							51,684	2.64		

* Water Consumed
† Residuals

CASE LOW NUCLEAR AVAILABILITY

FACILITIES SITED IN POWDER RIVER REGION BY 1985 (AFTER 1975)

STATE/COUNTY	SLURRY PIPELINE		LURGI GAS		SYNTHANE GAS		SYNTHOIL		ELECTRICAL GENERATION		OIL SHALE	
	ACRE-FT/YR*	WET SOLIDS† 10^6 TON/YR	ACRE-FT/YR*	WET SOLIDS† 10^6 TON/YR	ACRE-FT/YR*	WET SOLIDS† 10^6 TON/YR	ACRE-FT/YR*	WET SOLIDS† 10^6 TON/YR	ACRE-FT/YR*	WET SOLIDS† 10^6 TON/YR	ACRE-FT/YR*	WET SOLIDS† 10^6 TON/YR
MONTANA												
Powder River	38,342	-							53,318	6.02		
Big Horn	19,171	-							53,318	6.02		
Rosebud	19,171	-							26,659	3.01		
Custer												
Wibaux												
Richland												
McCone												
TOTAL	76,684	-							133,295	15.05		
NORTH DAKOTA												
Billings												
Bowman												
Dunn									23,884	2.65		
Hettinger												
McKenzie									23,884	2.65		
McLean									23,884	2.65		
Mercer									23,884	2.65		
Morton												
Oliver									23,884	2.65		
Slope									23,884	2.65		
Stark									23,884	2.65		
Ward												
Williams												
TOTAL									167,188	18.55		
WYOMING												
Campbell	38,342	-							51,684	2.64		
Johnson												
Sheridan												
TOTAL	38,342	-							51,684	2.64		

* Water Consumed
† Residuals

CASE LOW NUCLEAR AVAILABILITY

FACILITIES SITED IN POWDER RIVER REGION BY 1990 (AFTER 1975)

STATE/COUNTY	SLURRY PIPELINE		LURGI GAS		SYNTHANE GAS		SYNTHOIL		ELECTRICAL GENERATION		OIL SHALE	
	ACRE-FT/YR*	WET SOLIDS† 10^6 TON/YR	ACRE-FT/YR*	WET SOLIDS† 10^6 TON/YR	ACRE-FT/YR*	WET SOLIDS† 10^6 TON/YR	ACRE-FT/YR*	WET SOLIDS† 10^6 TON/YR	ACRE-FT/YR*	WET SOLIDS† 10^6 TON/YR	ACRE-FT/YR*	WET SOLIDS† 10^6 TON/YR
MONTANA												
Powder River	38,342	-							53,318	6.02		
Big Horn	38,342	-							53,318	6.02		
Rosebud	38,342	-	4,618	1.27					53,318	6.02		
Custer												
Wibaux												
Richland												
McCone												
TOTAL	115,026	-	4,618	1.27					159,954	18.06		
NORTH DAKOTA												
Billings									23,884	2.65		
Bowman												
Dunn			3,307	1.20					23,884	2.65		
Hettinger												
McKenzie									23,884	2.65		
McLean									23,884	2.65		
Mercer									23,884	2.65		
Morton												
Oliver									23,884	2.65		
Slope									23,884	2.65		
Stark									23,884	2.65		
Ward												
Williams												
TOTAL			3,307	1.20					191,072	21.20		
WYOMING												
Campbell	76,684	-							77,526	3.96		
Johnson												
Sheridan												
TOTAL	76,684	-							77,526	3.96		

* Water Consumed
† Residuals

CASE LOW NUCLEAR AVAILABILITY

FACILITIES SITED IN POWDER RIVER REGION BY 2000 (AFTER 1975)

STATE/COUNTY	SLURRY PIPELINE		LURGI GAS		SYNTHANE GAS		SYNTHOIL		ELECTRICAL GENERATION		OIL SHALE	
	ACRE-FT/YR*	WET SOLIDS† 10^6 TON/YR	ACRE-FT/YR*	WET SOLIDS† 10^6 TON/YR	ACRE-FT/YR*	WET SOLIDS† 10^6 TON/YR	ACRE-FT/YR*	WET SOLIDS† 10^6 TON/YR	ACRE-FT/YR*	WET SOLIDS† 10^6 TON/YR	ACRE-FT/YR*	WET SOLIDS† 10^6 TON/YR
MONTANA												
Powder River	115,026	-	18,472	5.08	15,616	2.24			79,977	9.03		
Big Horn	115,026	-	13,854	3.81	7,808	1.12	10,296	2.07	79,977	9.03		
Rosebud	115,026	-	13,854	3.81	7,808	1.12			106,636	12.04		
Custer												
Wibaux												
Richland												
McCone												
TOTAL	345,078	-	46,180	12.70	31,232	4.48	10,296	2.07	266,590	30.10		
NORTH DAKOTA												
Billings			3,307	1.20	7,671	1.08			23,884	2.65		
Bowman			3,307	1.20					23,884	2.65		
Dunn			3,307	1.20	7,671	1.08			47,768	5.30		
Hettinger			3,307	1.20					23,884	2.65		
McKenzie			3,307	1.20					23,884	2.65		
McLean			6,614	2.40					47,768	5.30		
Mercer			6,614	2.40	7,671	1.08			47,768	5.30		
Morton												
Oliver			3,307	1.20					23,884	2.65		
Slope					15,342	2.16			23,884	2.65		
Stark			6,614	2.40					23,884	2.65		
Ward												
Williams			3,307	1.20	7,671	1.08			23,884	2.65		
TOTAL			42,991	15.60	46,026	6.48			334,376	37.10		
WYOMING												
Campbell	115,086	-	12,618	2.16	7,776	0.71			72,526	3.96		
Johnson	38,342	-	4,206	0.72	7,776	0.71			51,684	2.64		
Sheridan	19,171	-	4,206	0.72					25,842	1.32		
TOTAL	172,539	-	21,030	3.60	15,552	1.42			155,052	7.92		

* Water Consumed
† Residuals

APPENDIX E. STATE TOTALS OF WATER CONSUMED AND RESIDUALS GENERATED FOR THREE ENERGY SCENARIOS

The results presented in Appendix D are presented in a different form in this appendix. For each region and facility, state totals for water consumed and residuals generated are presented by year and for the three energy scenarios. Table E-1 shows the page numbers on which the results for specific scenarios are presented in this appendix.

Table E-1. Location of results for specific scenario by region and facility.

Facility	Page Number	
	Rocky Mountain Region	Powder River Region
Slurry Pipeline*	247	254
Lurgi	248	255
Synthane	249	256
Gas Production (Lurgi and Synthane)	250	257
Synthoil	251	258
Electrical Generation	252	259
Oil Shale	253	--

*For each facility, totals for consumed water and residuals generated are presented by state for each energy scenario and for each year.

STATE TOTALS

FACILITIES SITED AFTER 1975 IN ROCKY MOUNTAINS REGION

FACILITY SLURRY PIPELINE (25 x 10^6 tons/yr @ 100% load factor)

	1980		1985		1990		2000	
	ACRE-FT PER YEAR*	10^6 TONS PER YEAR†	ACRE-FT PER YEAR*	10^6 TONS PER YEAR†	ACRE-FT PER YEAR*	10^6 TONS PER YEAR†	ACRE-FT PER YEAR*	10^6 TONS PER YEAR†
NOMINAL DEMAND CASE								
COLORADO			19,171	-	19,171	-	19,171	-
NEW MEXICO								
UTAH								
LOW DEMAND CASE								
COLORADO			19,171	-	19,171	-	19,171	-
NEW MEXICO								
UTAH								
LOW NUCLEAR AVAILABILITY CASE								
COLORADO			19,171	-	19,171	-	38,342	-
NEW MEXICO								
UTAH								

* Water Consumed
† Residuals (Wet Solids)

STATE TOTALS

FACILITIES SITED AFTER 1975 IN ROCKY MOUNTAINS REGION

FACILITY LURGI (250 x 10^6 scf/stream day @ 90% load factor)

	1980		1985		1990		2000	
	ACRE-FT PER YEAR*	10^6 TONS PER YEAR†	ACRE-FT PER YEAR*	10^6 TONS PER YEAR†	ACRE-FT PER YEAR*	10^6 TONS PER YEAR†	ACRE-FT PER YEAR*	10^6 TONS PER YEAR†
NOMINAL DEMAND CASE								
COLORADO								
NEW MEXICO							5,639	3.00
UTAH								
LOW DEMAND CASE								
COLORADO								
NEW MEXICO							5,639	3.00
UTAH								
LOW NUCLEAR AVAILABILITY CASE								
COLORADO								
NEW MEXICO							5,639	3.00
UTAH								

* Water Consumed
† Residuals (Wet Solids)

STATE TOTALS

FACILITIES SITED AFTER 1975 IN ROCKY MOUNTAINS REGION

FACILITY SYNTHANE (250 x 10^6 scf/stream day @ 90% load factor)

	1980		1985		1990		2000	
	ACRE-FT PER YEAR*	10^6 TONS PER YEAR†	ACRE-FT PER YEAR*	10^6 TONS PER YEAR†	ACRE-FT PER YEAR*	10^6 TONS PER YEAR†	ACRE-FT PER YEAR*	10^6 TONS PER YEAR†
NOMINAL DEMAND CASE								
COLORADO								
NEW MEXICO							8,670	2.84
UTAH								
LOW DEMAND CASE								
COLORADO								
NEW MEXICO								
UTAH								
LOW NUCLEAR AVAILABILITY CASE								
COLORADO								
NEW MEXICO							8,670	2.84
UTAH								

* Water Consumed

† Residuals (Wet Solids)

STATE TOTALS

FACILITIES SITED AFTER 1975 IN ROCKY MOUNTAINS REGION

FACILITY GAS PRODUCTION (LURGI and SYNTHANE)

	1980		1985		1990		2000	
	ACRE-FT PER YEAR*	10^6 TONS PER YEAR†	ACRE-FT PER YEAR*	10^6 TONS PER YEAR†	ACRE-FT PER YEAR*	10^6 TONS PER YEAR†	ACRE-FT PER YEAR*	10^6 TONS PER YEAR†
NOMINAL DEMAND CASE								
COLORADO								
NEW MEXICO							14,309	5.84
UTAH								
LOW DEMAND CASE								
COLORADO								
NEW MEXICO							5,639	3.00
UTAH								
LOW NUCLEAR AVAILABILITY CASE								
COLORADO								
NEW MEXICO							14,309	5.84
UTAH								

* Water Consumed

† Residuals (Wet Solids)

STATE TOTALS

FACILITIES SITED AFTER 1975 IN ROCKY MOUNTAINS REGION

FACILITY SYNTHOIL (100,000 bbl/stream day @ 90% load factor)

	1980		1985		1990		2000	
	ACRE-FT PER YEAR*	10^6 TONS PER YEAR†	ACRE-FT PER YEAR*	10^6 TONS PER YEAR†	ACRE-FT PER YEAR*	10^6 TONS PER YEAR†	ACRE-FT PER YEAR*	10^6 TONS PER YEAR†
NOMINAL DEMAND CASE								
COLORADO								
NEW MEXICO								
UTAH								
LOW DEMAND CASE								
COLORADO								
NEW MEXICO								
UTAH								
LOW NUCLEAR AVAILABILITY CASE								
COLORADO								
NEW MEXICO								
UTAH								

* Water Consumed

† Residuals (Wet Solids)

STATE TOTALS

FACILITIES SITED AFTER 1975 IN ROCKY MOUNTAINS REGION

FACILITY ELECTRICAL GENERATION (3,000 MWe @ 35% eff. and 70% load factor)

	1980		1985		1990		2000	
	ACRE-FT PER YEAR*	10^6 TONS PER YEAR†	ACRE-FT PER YEAR*	10^6 TONS PER YEAR†	ACRE-FT PER YEAR*	10^6 TONS PER YEAR†	ACRE-FT PER YEAR*	10^6 TONS PER YEAR†
NOMINAL DEMAND CASE								
COLORADO			28,482	1.14	28,482	1.14	28,482	1.14
NEW MEXICO	29,206	5.00	29,206	5.00	29,206	5.00	29,206	5.00
UTAH	29,816	5.30	29,816	5.30	59,632	10.60	59,632	10.60
LOW DEMAND CASE								
COLORADO								
NEW MEXICO			29,206	5.00	29,206	5.00	29,206	5.00
UTAH	29,816	5.30	29,816	5.30	29,816	5.30	29,816	5.30
LOW NUCLEAR AVAILABILITY CASE								
COLORADO			28,482	1.14	28,482	1.14	56,964	2.28
NEW MEXICO	29,206	5.00	58,412	10.00	58,412	10.00	87,618	15.00
UTAH	29,816	5.30	59,632	10.60	89,448	15.90	119,264	21.20

* Water Consumed
† Residuals (Wet Solids)

STATE TOTALS

FACILITIES SITED AFTER 1975 IN ROCKY MOUNTAINS REGION

FACILITY OIL SHALE (100,000 bbl/stream day @ 90% load factor)

	1980		1985		1990		2000	
	ACRE-FT PER YEAR*	10^6 TONS PER YEAR†	ACRE-FT PER YEAR*	10^6 TONS PER YEAR†	ACRE-FT PER YEAR*	10^6 TONS PER YEAR†	ACRE-FT PER YEAR*	10^6 TONS PER YEAR†
NOMINAL DEMAND CASE								
COLORADO			25,848	81.62	64,620	204.05	491,112	1,550.78
NEW MEXICO								
UTAH							51,696	163.24
LOW DEMAND CASE								
COLORADO			25,848	81.62	64,620	204.05	413,568	1,305.92
NEW MEXICO								
UTAH							38,772	122.43
LOW NUCLEAR AVAILABILITY CASE								
COLORADO			25,848	81.62	51,696	163.24	478,188	1,509.97
NEW MEXICO								
UTAH							51,696	163.24

* Water Consumed
† Residuals (Wet Solids)

STATE TOTALS

FACILITIES SITED AFTER 1975 IN POWDER RIVER REGION

FACILITY SLURRY PIPELINE (25 x 10^6 tons/yr @ 100% load factor)

	1980		1985		1990		2000	
	ACRE-FT PER YEAR*	10^6 TONS PER YEAR†	ACRE-FT PER YEAR*	10^6 TONS PER YEAR†	ACRE-FT PER YEAR*	10^6 TONS PER YEAR†	ACRE-FT PER YEAR*	10^6 TONS PER YEAR†
NOMINAL DEMAND CASE								
MONTANA			57,513	-	76,684	-	210,881	-
NORTH DAKOTA								
WYOMING	19,171	-	19,171	-	38,342	-	115,026	-
LOW DEMAND CASE								
MONTANA			38,342	-	57,513	-	172,539	-
NORTH DAKOTA								
WYOMING	19,171	-	19,171	-	38,342	-	76,684	-
LOW NUCLEAR AVAILABILITY CASE								
MONTANA			76,684	-	115,026	-	345,078	-
NORTH DAKOTA								
WYOMING	19,171	-	38,342	-	76,684	-	172,539	-

* Water Consumed
† Residuals (Wet Solids)

STATE TOTALS

FACILITIES SITED AFTER 1975 IN POWDER RIVER REGION

FACILITY LURGI (250 x 10^6 scf/stream day @ 90% load factor)

	1980		1985		1990		2000	
	ACRE-FT PER YEAR*	10^6 TONS PER YEAR†	ACRE-FT PER YEAR*	10^6 TONS PER YEAR†	ACRE-FT PER YEAR*	10^6 TONS PER YEAR†	ACRE-FT PER YEAR*	10^6 TONS PER YEAR†
NOMINAL DEMAND CASE								
MONTANA					4,618	1.27	46,180	12.70
NORTH DAKOTA					6,614	2.40	46,298	16.80
WYOMING							25,236	4.32
LOW DEMAND CASE								
MONTANA							27,708	7.62
NORTH DAKOTA					6,614	2.40	26,456	9.60
WYOMING							12,618	2.16
LOW NUCLEAR AVAILABILITY CASE								
MONTANA					4,618	1.27	46,180	12.70
NORTH DAKOTA					3,307	1.20	42,991	15.60
WYOMING							21,030	3.60

* Water Consumed
† Residuals (Wet Solids)

STATE TOTALS

FACILITIES SITED AFTER 1975 IN POWDER RIVER REGION

FACILITY SYNTHANE (250 x 10^6 scf/stream day @ 90% load factor)

	1980		1985		1990		2000	
	ACRE-FT PER YEAR*	10^6 TONS PER YEAR†	ACRE-FT PER YEAR*	10^6 TONS PER YEAR†	ACRE-FT PER YEAR*	10^6 TONS PER YEAR†	ACRE-FT PER YEAR*	10^6 TONS PER YEAR†
NOMINAL DEMAND CASE								
MONTANA							39,040	5.60
NORTH DAKOTA							53,697	7.56
WYOMING							23,328	2.13
LOW DEMAND CASE								
MONTANA							23,424	3.36
NORTH DAKOTA							38,355	5.40
WYOMING							15,552	1.42
LOW NUCLEAR AVAILABILITY CASE								
MONTANA							31,232	4.48
NORTH DAKOTA							46,026	6.48
WYOMING							15,552	1.42

* Water Consumed
† Residuals (Wet Solids)

STATE TOTALS

FACILITIES SITED AFTER 1975 IN POWDER RIVER REGION

FACILITY GAS PRODUCTION (LURGI AND SYNTHANE)

	1980		1985		1990		2000	
	ACRE-FT PER YEAR*	10^6 TONS PER YEAR†	ACRE-FT PER YEAR*	10^6 TONS PER YEAR†	ACRE-FT PER YEAR*	10^6 TONS PER YEAR†	ACRE-FT PER YEAR*	10^6 TONS PER YEAR†
NOMINAL DEMAND CASE								
MONTANA					4,618	1.27	85,220	18.30
NORTH DAKOTA					6,614	2.40	99,995	24.36
WYOMING							48,564	6.45
LOW DEMAND CASE								
MONTANA							51,132	10.98
NORTH DAKOTA					6,614	2.40	64,811	15.00
WYOMING							28,170	3.58
LOW NUCLEAR AVAILABILITY CASE								
MONTANA					4,618	1.27	77,412	17.18
NORTH DAKOTA					3,307	1.20	89,017	22.08
WYOMING							36,582	5.02

* Water Consumed
† Residuals (Wet Solids)

STATE TOTALS

FACILITIES SITED AFTER 1975 IN POWDER RIVER REGION

FACILITY SYNTHOIL (100,000 bbl/stream day @ 90% load factor)

	1980		1985		1990		2000	
	ACRE-FT PER YEAR*	10^6 TONS PER YEAR†	ACRE-FT PER YEAR*	10^6 TONS PER YEAR†	ACRE-FT PER YEAR*	10^6 TONS PER YEAR†	ACRE-FT PER YEAR*	10^6 TONS PER YEAR†
NOMINAL DEMAND CASE								
MONTANA							5,148	1.04
NORTH DAKOTA							10,085	2.00
WYOMING								
LOW DEMAND CASE								
MONTANA							10,296	2.07
NORTH DAKOTA								
WYOMING							9,227	1.23
LOW NUCLEAR AVAILABILITY CASE								
MONTANA							10,296	2.07
NORTH DAKOTA								
WYOMING								

* Water Consumed
† Residuals (Wet Solids)

STATE TOTALS

FACILITIES SITED AFTER 1975 IN POWDER RIVER REGION

FACILITY ELECTRICAL GENERATION (3,000 MWe @ 35% eff. and 70% load factor)

	1980		1985		1990		2000	
	ACRE-FT PER YEAR*	10^6 TONS PER YEAR†	ACRE-FT PER YEAR*	10^6 TONS PER YEAR†	ACRE-FT PER YEAR*	10^6 TONS PER YEAR†	ACRE-FT PER YEAR*	10^6 TONS PER YEAR†
NOMINAL DEMAND CASE								
MONTANA	53,318	6.02	106,636	12.04	133,295	15.05	159,954	18.06
NORTH DAKOTA	47,768	5.30	119,420	13.25	143,304	15.90	214,956	23.85
WYOMING	25,842	1.32	51,684	2.64	51.684	2.64	77,526	3.96
LOW DEMAND CASE								
MONTANA	26,659	3.01	79,977	9.03	79,977	9.03	133,295	15.05
NORTH DAKOTA	47,768	5.30	95,536	10.60	95,536	10.60	143,304	15.90
WYOMING	25,842	1.32	51,684	2.64	77,526	3.96	77,526	3.96
LOW NUCLEAR AVAILABILITY CASE								
MONTANA	53,318	6.02	133,295	15.05	159,954	18.06	266,590	30.10
NORTH DAKOTA	47,768	5.30	167,188	18.55	191,072	21.20	334,376	37.10
WYOMING	51,684	2.64	51,684	2.64	77,526	3.96	155,052	7.92

* Water Consumed
† Residuals (Wet Solids)

TECHNICAL REPORT DATA
(Please read Instructions on the reverse before completing)

1. REPORT NO. EPA-600/7-77-037	2.	3. RECIPIENT'S ACCESSION NO.
4. TITLE AND SUBTITLE Water Requirements for Steam-Electric Power Generation and Synthetic Fuel Plants in the Western United States		5. REPORT DATE February, 1977
		6. PERFORMING ORGANIZATION CODE
7. AUTHOR(S) H. Gold, D.J. Goldstein, R.F. Probstein, J.S. Shen & D. Yung		8. PERFORMING ORGANIZATION REPORT NO.
9. PERFORMING ORGANIZATION NAME AND ADDRESS Water Purification Associates Cambridge, Massachusetts 02142		10. PROGRAM ELEMENT NO. EHE 624C
		11. CONTRACT/GRANT NO. 68-01-1916
12. SPONSORING AGENCY NAME AND ADDRESS Office of Energy, Minerals and Industry Office of Research and Development U.S. Environmental Protection Agency Washington, D.C. 20460		13. TYPE OF REPORT AND PERIOD COVERED Final, 5/76-8/76
		14. SPONSORING AGENCY CODE EPA/600/17

15. SUPPLEMENTARY NOTES

16. ABSTRACT

The study describes the procedures for the detailed determination of the water consumed for mining and processing coal and oil shale, and for determining the residuals generated. The processes considered are Lurgi, Synthane, and Synthoil for coal conversion, TOSCO II for shale conversion, coal-fired steam electric power generation and slurry pipeline. In addition, determiniations are also made of the water consumed for process cooling, flue gas desulfurization, revegetation of mined land, solids disposal and by evaporation and other uses within the mine-plant complex. In these determinations it is assumed that there is no discharge to receiving waters and that there is a reasonably high level of recycle and reuse of process effluent waters. Wasteful evaporation of wastewater is not permitted. Economic studies of water treatment are not included in this assessment except for some of the process cooling studies.

The consumptive water use and solids residuals are determined for a total of 21 plant-site combinations. The sites are: Beulah, North Dakota; Colstrip, Montana; Gillette, Wyoming; Kaiparowits/Escalante, Utah; Navajo/Farmington, New Mexico; and Rifle, Colorado. A detailed breakdown by consumptive water use category is presented in tabular form for each plant-site combination. Approximately twenty water use categories are considered.

17. KEY WORDS AND DOCUMENT ANALYSIS

a. DESCRIPTORS	b. IDENTIFIERS/OPEN ENDED TERMS	c. COSATI Field/Group
Water Supply Energy Conversion	Coal Conversion Oil Shale Conversion Water Consumption	13B

18. DISTRIBUTION STATEMENT Release to Public	19. SECURITY CLASS *(This Report)* UNCLASSIFIED	21. NO. OF PAGES 276
	20. SECURITY CLASS *(This page)* UNCLASSIFIED	22. PRICE

EPA Form 2220-1 (9-73)

*U.S. GOVERNMENT PRINTING OFFICE: 1977 720-117/1982 1-3

U.S. ENVIRONMENTAL PROTECTION AGENCY
Office of Research and Development
Technical Information Staff
Cincinnati, Ohio 45268

OFFICIAL BUSINESS
PENALTY FOR PRIVATE USE, $300
AN EQUAL OPPORTUNITY EMPLOYER

POSTAGE AND FEES PAID
U.S. ENVIRONMENTAL PROTECTION AGENCY
EPA-335

Special Fourth-Class Rate
Book

If your address is incorrect, please change on the above label; tear off; and return to the above address.
If you do not desire to continue receiving this technical report series, CHECK HERE ☐; tear off label, and return it to the above address.