United States
Environmental Protection
Agency

Office of Air Quality
Planning and Standards
Research Triangle Park, NC 27711

EPA-454/R-99-031
September 1999

Air

FTIR EMISSIONS TEST AT AN IRON FOUNDRY

GM Powertrain Group, General Motors Corporation
Saginaw Metal Casting Operations
Saginaw, Michigan

PREFACE

This draft report was prepared by Midwest Research Institute (MRI) for the U. S. Environmental Protection Agency (EPA) under EPA Contract No. 68-D-98-027, Work Assignment No. 2-13. Mr. Michael Ciolek is the EPA Work Assignment Manager (WAM). Dr. Thomas Geyer is the MRI Work Assignment Leader (WAL). The field test was performed under EPA Contract No. 68-D2-0165, Work Assignment No. 4-25 and a draft report was submitted under EPA Contract No. 68-W6-0048, Work Assignment No. 2-08. Mr. Michael Ciolek was the EPA WAM for the Emission Measurement Center (EMC) under Work Assignment 4-25 and Mr. Michael Toney was the WAM under Work Assignment No. 2-08. Mr. John Hosenfeld was the MRI WAL under Work Assignment 2-08 and Dr. Thomas Geyer was the MRI task leader for Work Assignment 2-08, task 08.

This report presents the procedures, schedule, and test results for an emissions test performed at GM Powertrain Group Saginaw Metal Casting Operations (GM/SMCO), a metal casting facility in Saginaw, Michigan. The emissions test used Fourier transform infrared (FTIR) sampling procedures to measure HAPs and other pollutants.

This report consists of one volume (381 pages) with seven sections and four appendices.

Midwest Research Institute

for John Hosenfeld
Program Manager

Approved:

Jeff Shular
Director, Environmental Engineering Division

September 30, 1999

TABLE OF CONTENTS

Page

1.0 INTRODUCTION 1-1
1.1 BACKGROUND 1-1
1.2 PROJECT SUMMARY 1-1
1.3 PROJECT PERSONNEL 1-9

2.0 PROCESS AND CONTROL EQUIPMENT OPERATION 2-1
2.1 INTRODUCTION 2-1
2.2 PROCESS DESCRIPTION 2-1
2.2.1 Iron Melting in Cupolas 2-1
2.2.2 Pouring, Cooling and Shakeout 2-4
2.3 PROCESS AND CONTROL DEVICE MONITORING RESULTS 2-9
2.3.1 Cupola B 2-9
2.3.2 Mold Line 4 2-14

3.0 TEST LOCATIONS AND GAS COMPOSITION 3-1
3.1 VENTURI SCRUBBER OUTLET - STACK 3-1
3.2 VENTURI SCRUBBER INLET DUCT 3-1
3.3 MOLD POURING DUCT 3-1
3.4 MOLD COOLING LINE 3-1
3.5 MOLD SHAKE-OUT HOUSING 3-2
3.6 VOLUMETRIC FLOW 3-6

4.0 RESULTS 4-1
4.1 TEST SCHEDULE 4-1
4.2 FIELD TEST PROBLEMS AND CHANGES 4-1
4.3 FTIR RESULTS 4-2
4.3.1 Tedlar Bag Samples 4-2
4.3.2 Scrubber Inlet and Outlet 4-5
4.4 ANALYTE SPIKE RESULTS 4-5

5.0 TEST PROCEDURES 5-1
5.1 EXTRACTIVE SAMPLING SYSTEM 5-1
5.1.1 Sample System Components 5-1
5.1.2 Sample Gas Stream Flow 5-2
5.2 TEDLAR® GAS BAG SAMPLING 5-4
5.3 FTIR SAMPLING PROCEDURES 5-4
5.3.1 Batch Samples 5-4
5.3.2 Continuous Sampling 5-5

TABLE OF CONTENTS (CONTINUED)

Page

5.4 ANALYTE SPIKING 5-5
5.4.1 Analyte Spiking Procedures 5-6
5.4.2 Analysis of Spiked Results 5-6
5.4.2.1 Determination of Formaldehyde Standard 5-6
5.4.2.2 Determination of Concentrations in Spike Mixtures 5-7
5.4.2.3 Determination of Percent Recovery 5-9
5.5 ANALYTICAL PROCEDURES 5-10
5.5.1 Program Input 5-11
5.5.2 EPA Reference Spectra 5-14
5.6 FTIR SYSTEM 5-14

6.0 SUMMARY OF QA/QC PROCEDURES 6-1
6.1 SAMPLING AND TEST CONDITIONS 6-1
6.2 FTIR SPECTRA 6-2

7.0 REFERENCES 7-1

APPENDIX A. FIELD DATA
APPENDIX B. FTIR DATA
APPENDIX C. CALIBRATION GAS CERTIFICATIONS
APPENDIX D. TEST METHODS

LIST OF FIGURES

Page

Figure 2-1. Schematic of the cupola gas handling system 2-3
Figure 2-2. Schematic of capture and control systems for Line 4 2-5
Figure 2-3. Hot blast temperature during each test run 2-12
Figure 2-4. Hot blast rate during the test runs 2-13
Figure 3-1. Schematic of GM Saginaw cupola gas handling system sampling points A and B 3-3
Figure 3-2. Schematic of scrubber inlet and scrubber outlet; sampling points A and B. 3-4
Figure 3-3. Pouring, cooling, and shake-out sampling points. 3-5
Figure 4-1. Sample spectrum from the cooling process plotted with a methanol reference spectrum 4-3
Figure 4-2. Sample spectrum from the cooling process plotted with a methanol reference spectrum shown in a different frequency region 4-3
Figure 4-3. Sample spectrum from the cooling process plotted with toluene and hexane reference spectra 4-3
Figure 5-1. Sampling system schematic. 5-3

TABLE OF CONTENTS (CONTINUED)

Page

LIST OF TABLES

TABLE 1-1. SUMMARY OF FTIR RESULTS FROM THE MOLD POURING PROCESS 1-3
TABLE 1-2. SUMMARY OF FTIR RESULTS FROM THE MOLD COOLING PROCESS 1-4
TABLE 1-3. SUMMARY OF FTIR RESULTS FROM THE SHAKEOUT HOUSING PROCESS 1-6
TABLE 1-4. SUMMARY OF FTIR RESULTS (ppm) AT THE VENTURI SCRUBBER INLET AND OUTLET 1-8
TABLE 1-5 PROJECT PERSONNEL 1-9
TABLE 2-1. TYPICAL CUPOLA CHARGE MATERIALS 2-2
TABLE 2-2. TYPICAL RESULTS FROM GREEN SAND ANALYSIS 2-5
TABLE 2-3. CHEMICALS USED IN CORE MAKING AND MOLD SPRAYING 2-8
TABLE 2-4. SUMMARY OF CUPOLA MONITORING RESULTS 2-10
TABLE 2-5. SUMMARY OF CUPOLA CHARGING DURING THE TEST DAYS 2-11
TABLE 2-6. SUMMARY OF NUMBER OF MOLDS POURED ON LINE 4 2-15
TABLE 2-7. SUMMARY OF METAL POURED AND DOWNTIME FOR LINE 4 2-16
TABLE 2-8. LINE 4 MOLD COUNTS DURING TESTING PERIODS 2-17
TABLE 2-9. MOLD LINE 4 PRODUCTION DURING TESTING PERIODS 2-19
TABLE 3-1. CUPOLA GAS COMPOSITIONS AND FLOW SUMMARY 3-6
TABLE 3-2. MOLD POURING, COOLING, AND SHAKE-OUT HOUSING GAS COMPOSITION AND FLOW SUMMARY 3-7
TABLE 4-1. TEST SCHEDULE AT GM POWERTRAIN,SAGINAW, MICHIGAN 4-1
TABLE 4-2. SUMMARY OF FORMALDEHYDE SPIKE RESULTS AT THE SCRUBBER INLET 4-7
TABLE 4-3. SUMMARY OF TOLUENE SPIKE RESULTS AT THE SCRUBBER INLET 4-8
TABLE 4-4. SUMMARY OF FORMALDEHYDE SPIKE RESULTS AT THE SCRUBBER OUTLET 4-9
TABLE 4-5. SUMMARY OF TOLUENE SPIKE RESULTS AT THE SCRUBBER OUTLET 4-10
TABLE 4-6. COMPARISON OF EPA TOLUENE REFERENCE SPECTRA TO SPECTRA OF TOLUENE CYLINDER STANDARD 4-10
TABLE 5-1. DETERMINATION OF FORMALDEHYDE STANDARD CONCENTRATION 5-7
TABLE 5-2. CALCULATED CONCENTRATIONS IN MIXTURES USED FOR ANALYTE SPIKING AT THE SCRUBBER INLET 5-8
TABLE 5-3. CALCULATED CONCENTRATIONS IN MIXTURES USED FOR ANALYTE SPIKING AT THE SCRUBBER OUTLET 5-8
TABLE 5-4. PROGRAM INPUT FOR ANALYSIS OF SAMPLE SPECTRA FROM POURING AND COOLING AND SHAKE-OUT HOUSING 5-12

TABLE OF CONTENTS (CONTINUED)

Page

TABLE 5-5. PROGRAM INPUT FOR ANALYSIS OF SAMPLE SPECTRA FROM SCRUBBER INLET AND OUTLET 5-13
TABLE 5-6. PROGRAM INPUT FOR ANALYSIS OF CTS SPECTRA AND PATH LENGTH DETERMINATION 5-13
TABLE 5-7. RESULTS OF PATH LENGTH DETERMINATION 5-14

FTIR EMISSIONS TEST AT AN IRON FOUNDRY

GM Powertrain Group, General Motors Corporation
Saginaw Metal Casting Operations
Saginaw, Michigan

Prepared for

Office of Air Quality Planning and Standards
Emissions, Monitoring and Analysis Division
Emission Measurement Center (MD-19)
Research Triangle Park, North Carolina 27711
Mr. Michael Ciolek
Work Assignment Manager

EPA Contract No. 68-D-98-027
Work Assignment 2-13
MRI Project No. 104951-1-013-04

September, 1999

1.0 INTRODUCTION

1.1 BACKGROUND

The Emission Measurement Center (EMC) of the U. S. Environmental Protection Agency (EPA) received a request from the Metals Group of the Emission Standards Division (ESD) and Source Characterization Group of the Emission Monitoring and Analysis Division (EMAD), both in the Office of Air Quality Planning and Standards (OAQPS), U. S. EPA, to perform emissions testing at iron foundries, specifically on cupola emission control devices, and pouring, cooling, and shake-out operations. The test program was performed in September, 1997 under EPA Contract No. 68-D2-0165, Work Assignment 4-25. This draft report for testing conducted at the GM Powertrain Group Saginaw Metal Casting Operations (GM/SMCO) facility was prepared under EPA Contract No. 68-W6-0048, Work Assignment 2-08.

1.2 PROJECT SUMMARY

The cupola melting process is used to melt iron for casting into automotive parts. It is potentially a significant source of hazardous air pollutant (HAP) emissions, including metal and organic compounds. Emissions from the mold pouring, cooling, and shake-out are also potential sources of HAP emissions.

The principal emission point at a cupola furnace is the exhaust from the furnace itself. Emission controls for GM/SMCO include a coarse grain separator, afterburner, drop out chamber, heat exchangers (recuperators), quench, venturi scrubber, and stack. Cupola emissions testing was conducted at the stack (scrubber outlet) and the inlet to the scrubber to determine the measurable emissions released during the melting process. Testing was also conducted at the ducts drawing from the pouring, cooling, and shake-out lines to determine the measurable emissions released during the pouring, cooling, and shake-out of the castings.

Three Fourier transform infrared (FTIR) test runs were conducted at the cupola inlet and outlet locations over a three-day period simultaneously with manual method testing conducted by Pacific Environmental Services (PES). Additionally, Midwest Research Institute (MRI) collected Tedlar bag samples from pouring, cooling, and shake-out ducts. The Tedlar bag samples were analyzed by FTIR. Summaries of the FTIR results are presented in Tables 1-1 to 1-4.

The FTIR analyses followed EPA Method 320[1], which employs an extractive sampling procedure. A probe, pump, and heated line are used to transport samples from the source to a gas manifold in a trailer that contains the FTIR equipment. A separate procedure for collecting and analyzing the Tedlar bag samples was prepared by MRI and approved by EPA prior to the field test. A preliminary analysis of the spectra was performed onsite. The analysis was reviewed and revised after the FTIR data collection was completed. A compact disk containing all of the FTIR data was provided with the draft report.

The results at the mold cooling, pouring and shakeout housing processes have been revised since the draft report. The revised results are from analyses that included reference spectra of additional aliphatic organic compounds. The additional reference spectra were measured in the laboratory under work assignments 2-12 and 2-13. The revised analyses are discussed in Section 4.3.1. Appendix B contains documentation of the reference spectra prepared for the revised analysis.

TABLE 1-1. SUMMARY OF FTIR RESULTS FROM THE MOLD POURING PROCESS[a]

Mold Pouring (ppm)														
File name	Date	Time	Methanol	Unc.	Toluene	Unc.	Hexane	Unc.	Ethylene	Unc.	Methane	Unc.	CO	Unc.
POUR101	9/23/97	11:07	0.0	0.4	0.0	0.9	0.0	5.0	3.9	0.5	38.4	0.4	87.1	12.8
POUR102	9/23/97	11:25	0.0	0.4	2.3	0.6	0.0	5.0	4.0	0.5	39.3	0.4	86.3	12.6
		Emission Rate												
		Average ppm	0.0	0.4	1.2	0.8	0.0	5.0	3.9	0.5	38.8	0.4	86.7	12.7
		lb/hr	0.0		0.89		0.00		0.92		5.20		20.3	
		kg/hr	0.0		0.41		0.00		0.42		2.36		9.2	

[a] Concentrations are in ppm. A zero concentration indicates a non-detect for that sample. "Unc" indicates an estimated uncertainty in each measurement.

TABLE 1-1. (CONTINUED)

Mold Pouring (ppm)								
File name	Date	Time	Formalde-hyde	Unc.	Butane	Unc.	1-Pentene	Unc.
POUR101	9/23/97	11:07	1.0	0.4	3.70	0.24	0	2.42
POUR102	9/23/97	11:25	1.4	0.4	0	5.49	3.93	0.18
		Emission Rate						
		Average ppm	1.2	0.4	1.85		1.96	
		lb/hr	0.30		0.90		1.15	
		kg/hr	0.14		0.41		0.52	

[a] Concentrations are in ppm. A zero concentration indicates a non-detect for that sample. "Unc" indicates an estimated uncertainty in each measurement.

TABLE 1-2. SUMMARY OF FTIR RESULTS FROM THE MOLD COOLING PROCESS[a]

Mold Cooling (ppm)																		
Duct	File name	Date	Time	Methanol	Unc.	Toluene	Unc.	Hexane	Unc.	Ethylene	Unc.	Methane	Unc.	CO	Unc.	Formalde-hyde	Unc.
Main	COOLM101	9/25/97	14:09	1.8	0.7	12.8	1.3	2.1	0.5	10.2	0.8	139.7	0.8	192.7	25.1	1.8	0.7
	COOLM102		14:13	1.8	0.7	12.6	1.3	2.2	0.5	10.2	0.8	139.0	0.8	192.6	25.0	1.7	0.7
			Average -->	1.8	0.7	12.7	1.3	2.2	0.5	10.2	0.8	139.4	0.8	192.7	25.1	1.7	0.7
R	COOLR101		11:09	2.5	0.8	18.9	1.8	2.2	0.8	16.8	1.0	195.0	1.1	243.9	32.9	2.1	1.0
	COOLR102		11:13	2.5	0.8	18.9	1.8	2.2	0.8	16.8	1.0	195.2	1.1	245.3	33.0	2.1	1.0
			Average -->	2.5	0.8	18.9	1.8	2.2	0.8	16.8	1.0	195.1	1.1	244.6	32.9	2.1	1.0
S	COOLS101	9/24/97	15:32	4.5	0.7	16.6	1.1	5.2	0.5	8.2	0.8	118.3	0.8	137.9	21.8	2.0	0.7
	COOLS102		15:37	4.5	0.7	16.8	1.1	5.1	0.5	8.3	0.8	119.4	0.8	141.3	22.0	1.8	0.7
			Average -->	4.5	0.7	16.7	1.1	5.1	0.5	8.3	0.8	118.8	0.8	139.6	21.9	1.9	0.7
			Emission Rate														
			Total ppm [b]	8.8	0.7	48.3	1.4	9.5	0.6	35.2	0.9	453.2	0.9	576.9	26.6	5.7	0.8
			lb/hr [c]	1.48		20.3		4.47		4.01		30.92		68.25		0.79	
			kg/hr [c]	0.67		9.22		2.03		1.82		14.04		31.00		0.36	

[a] Concentrations are in ppm. A zero concentration indicates a non-detect for that sample. "Unc" indicates an estimated uncertainty in each measurement.
[b] The total ppm concentration is the sum of the average concentrations in each duct.
[c] The emission rates for each duct were calculated separately using the flow rates in Table 3-2. The emission rates fo r the three ducts were summed to give the total emission rate.

TABLE 1-2. (CONTINUED)

Mold Cooling (ppm)									
Duct	File name	Date	Time	3-Methyl-pentane	Unc.	Butane	Unc.	1-Pentene	Unc.
Main	COOLM101	9/25/97	14:09	0.74	0.65	5.7	3.0	7.5	1.8
	COOLM102		14:13	0.75	0.66	5.6	3.0	7.4	1.8
			Average -->	0.75	0.65	5.6	3.0	7.5	1.8
R	COOLR101		11:09	1.2	0.9	12.3	4.3	8.9	2.6
	COOLR102		11:13	1.2	0.9	12.4	4.3	8.8	2.6
			Average -->	1.2	0.9	12.4	4.3	8.9	2.6
S	COOLS101	9/24/97	15:32	0	0.6	0	2.9	13.4	1.1
	COOLS102		15:37	0	0.6	0	3.0	13.5	1.1
			Average -->	0	0.6	0	3.0	13.5	1.1
			Emission Rate						
			Total ppm [b]	1.98		18.0		29.8	
			lb/hr [c]	0.53		3.05		10.59	
			kg/hr [c]	0.24		1.39		4.81	

[a] Concentrations are in ppm. A zero concentration indicates a non-detect for that sample. "Unc" indicates an estimated uncertainty in each measurement.

[b] The total ppm concentration is the sum of the average concentrations in each duct.

[c] The emission rates for each duct were calculated separately using the flow rates in Table 3-2. The emission rates for the three ducts were summed to give the total emission rate.

TABLE 1-3. SUMMARY OF FTIR RESULTS FROM THE SHAKEOUT HOUSING PROCESS[a]

Shake-out Housing (ppm)																	
Stack	File name	Date	Time	Methanol	Unc.	Toluene	Unc.	Hexane	Unc.	Ethylene	Unc.	Methane	Unc.	CO	Unc.	Formalde-hyde	Unc.
3	SHK3_101	9/23/97	11:36	1.0	0.3	7.0	0.4	0.0	2.9	0.0	0.3	14.5	0.2	32.9	5.4	1.1	0.2
	SHK3_201	9/24/97	13:22	1.2	0.4	4.4	0.5	3.7	0.2	0.0	0.5	17.9	0.3	61.8	9.4	0.8	0.3
	SHK3_202	9/24/97	13:25	1.2	0.4	4.1	0.6	0.0	3.4	0.0	0.5	17.7	0.4	62.1	9.4	1.0	0.3
			Average -->	1.1	0.4	5.2	0.5	1.2	2.2	0.0	0.5	16.7	0.3	52.3	8.1	0.9	0.3
4	SHK4_101	9/23/97	14:55	1.4	0.5	9.6	0.5	0.0	4.2	1.0	0.6	20.5	0.3	66.1	9.3	1.6	0.3
	SHK4_102	9/23/97	15:00	1.4	0.5	8.9	0.6	0.0	4.2	1.0	0.6	20.6	0.4	66.5	9.4	1.3	0.3
			Average -->	1.4	0.5	9.3	0.5	0.0	4.2	1.0	0.6	20.6	0.4	66.3	9.3	1.4	0.3
5	SHK5_101	9/24/97	13:29	2.1	0.0	4.8	0.0	0.0	0.0	0.6	0.0	20.7	0.0	75.2	0.0	1.2	0.0
			Emission Rate														
			Total ppm [b]	4.6	0.4	19.2	0.4	1.2	2.5	1.6	0.4	58.0	0.3	193.8	7.2	3.6	0.2
			lb/hr [c]	0.94		11.5		0.7		0.29		6.0		34.8		0.7	
			kg/hr [c]	0.43		5.2		0.3		0.13		2.7		15.8		0.3	

[a] Concentrations are in ppm. A zero concentration indicates a non-detect for that sample. "Unc" indicates an estimated uncertainty in each measurement.
[b] The total ppm concentration is the sum of the average concentrations in each duct.
[c] The emission rates for each duct were calculated separately using the flow rates in Table 3-2. The emission rates for the three ducts were summed to give the total emission rate.

TABLE 1-3. (CONTINUED)

Shakeout Housing (ppm)															
Stack	File name	Date	Time	3-Methyl-pentane	Unc.	Butane	Unc.	2-Methyl-1-Pentene	Unc.	n-Heptane	Unc.	1-Pentene	Unc.	2-Methyl-2-butene	Unc.
3	SHK3_101	9/23/97	11:36	0	0.6	0	0.8	0	0.8	2.2	0.1	4.2	0.3	0.40	0.3
	SHK3_201	9/24/97	13:22	0	0.3	0	0.9	0.8	0.3	0	1.4	0	1.6	1.01	0.3
	SHK3_202	9/24/97	13:25	0.44	0.3	0	1.2	5.4	0.6	0	1.5	0	1.7	2.78	0.3
			Average -->	0.15	0.4	0	1.0	2.1	0.6	0.7	1.0	1.4	1.2	1.40	0.3
4	SHK4_101	9/23/97	14:55	0	0.9	0	1.1	0	0.9	3.2	0.1	5.5	0.4	0	1.2
	SHK4_102	9/23/97	15:00	0	0.9	0	1.1	4.2	0.3	2.9	0.2	0	2.0	1.25	0.3
			Average -->	0	0.9	0	1.1	2.1	0.6	3.1	0.2	2.8	1.2	0.624	0.8
5	SHK5_101	9/24/97	13:29	0	0.2	1.7	0.9	1.7	0.5	3.3	0.1	0	1.6	1.77	0.3
			Emission Rate												
			Total ppm [b]	0.15	1.5	1.7	2.9	5.8	1.7	7.0	1.3	4.2	4.0	3.79	1.3
			lb/hr [c]	0.084		0.59		3.17		4.48		1.93		1.72	
			kg/hr [c]	0.038		0.27		1.44		2.03		0.88		0.782	

[a] Concentrations are in ppm. A zero concentration indicates a non-detect for that sample. "Unc" indicates an estimated uncertainty in each measurement.

[b] The total ppm concentration is the sum of the average concentrations in each duct.

[c] The emission rates for each duct were calculated separately using the flow rates in Table 3-2. The emission rates for the three ducts were summed to give the total emission rate.

TABLE 1-4. SUMMARY OF FTIR RESULTS (ppm) AT THE VENTURI SCRUBBER INLET AND OUTLET

		Run 1				Run 2				Run 3			
Compound	Units	Inlet	Unc.[a]	Outlet	Unc.	Inlet	Unc.	Outlet	Unc.	Inlet	Unc.	Outlet	Unc.
Methane	ppm	52.7	4.6	18.5	3.7	27.0	7.1	20.5	5.3	25.4	7.1	11.2	3.1
	lb/hr	9.9		3.5		5.6		4.0		5.0		2.0	
	kg/hr			1.6		2.6		1.8		2.2		0.89	
Carbon Monoxide	ppm	91.1	68.4	76.8	64.9	ND	101.8	ND	82.08	ND	103.3	0.20	61.08
	lb/hr	29.9		25.4								0.06	
	kg/hr			11.5								0.03	

[a]Unc is the estimated uncertainty (ppm) in the calculated analyte concentration.

1.3 PROJECT PERSONNEL

The EPA test program was administered by EMC. The Test Request was initiated by the Metals Group of the ESD and the Source Characterization Group of the EMAD, both in OAQPS. Some key project personnel are listed in Table 1-5.

TABLE 1-5 PROJECT PERSONNEL

Organization and Title	Name	Phone No.
Coordinator Environmental & Energy GM Powertrain Group General Motors Corporation Saginaw Metal Casting Operations 77 W. Center Street P.O. Box 5073 Saginaw, MI 48605-5073	Steven M. Tomaszewski	(517) 757-0920 Tel (517) 757-0899 Fax
Environmental Auditor GM Powertrain Group General Motors Corporation Saginaw Metal Casting Operations Mail Code 486-629-016 1629 N. Washington Avenue Saginaw, MI 48605	David F. Genske	(517) 757-1455 Tel (517) 757-1652 Fax
U. S. EPA, EMC Work Assignment Manager Work Assignment 4-25	Michael K. Ciolek	(919) 541-4921
U. S. EPA, EMC Work Assignment Manager Work Assignment 2-08	Michael L. Toney	(919) 541-5247
MRI Work Assignment Leader Work Assignment 4-25 Work Assignment 2-13	Thomas J. Geyer	(919) 851-8181, ext 3120
MRI Program Manager Work Assignment Leader Work Assignment 2-08	John Hosenfeld	(816) 753-7600, ext 1336

2.0 PROCESS AND CONTROL EQUIPMENT OPERATION

The information in Section 2 was prepared by Research Triangle Institute and provided to MRI by the EMC. It was included in the report without MRI review.

2.1 INTRODUCTION

The GM Powertrain Group, part of the General Motors Corporation, operates a foundry in Saginaw, Michigan named Saginaw Metal Casting Operations (SMCO), which casts grey iron and aluminum. This foundry was constructed by GM in 1918 and is currently operating three cupolas and two green sand lines for casting iron along with a melting furnace and one casting line for aluminum to produce engine blocks for use in GM automobiles. The plant has about 2,000 employees. This section of the test report provides a description of the cupola operation for iron melting and the casting operation, including pouring, cooling, and shakeout.

2.2 PROCESS DESCRIPTION

2.2.1 Iron Melting in Cupolas

There are three cupolas in operation ("B", "C", and "D"). Cupolas B and C are very similar and are configured with an afterburner followed by a venturi scrubber (i.e., they burn "dirty" gas). Cupola D burns the gas after removal of particulate matter by the scrubber. Plant personnel indicated that Cupolas B and C were more representative of the industry and pointed out that cupolas configured like D are no longer constructed. Consequently, Cupola B was chosen for testing, primarily because it had more modern and complete controls and instrumentation.

Cupola B has a diameter of 114 inches (in.) and melts at a rate of about 55 tons per hour (tph) with a blast rate of 21,000 to 23,000 cfm, which makes it among the larger cupolas in use in the U.S. The blast is enriched with oxygen at a rate of about 4 percent. Figure 2-1 is a simplified schematic of the cupola gas handling system and emission control equipment.

The cupola is charged with metal scrap, briquettes made from metal shavings, coke, and limestone at a point that is above the gas take-off. The composition of a typical charge is given in Table 2-1 and includes 6 tons of iron. Very few emissions occur from charging because of the below-charge gas take-off and the maintenance of negative pressure on the cupola. The off gas from the cupola is removed at about 400° to 500°F and contains 12 to 14 percent carbon monoxide (CO). This gas enters a large combustion chamber where the CO is burned at about

1500° to 1600°F. Some heavy and larger size particles settle out in the combustion chamber and are removed at that point. The hot exhaust gases from the combustion chamber pass through two recuperators that are used to pre-heat the cupola's blast air to about 1100°F. There is also a cooler available for additional temperature control as necessary.

TABLE 2-1. TYPICAL CUPOLA CHARGE MATERIALS

Material	Typical range (lbs/charge)[a]
Remelt from foundry[b]	4,000 to 6,000
Steel scrap[b]	3,000 to 4,000
Gray iron bricks[b, c]	3,000
Silicon bricks	70 to 105
Blend bricks (Si, Mn, Cr)	260 to 300
Silicon carbide	300
Coke	1,400 to 1,500
Limestone	500

[a] Typical range observed during the test days.
[b] Remelt, steel scrap, and gray iron bricks are the sources of iron and total 12,000 lbs (6 tons) per charge.
[c] Gray iron bricks are a pressed material made from borings, shavings, etc.

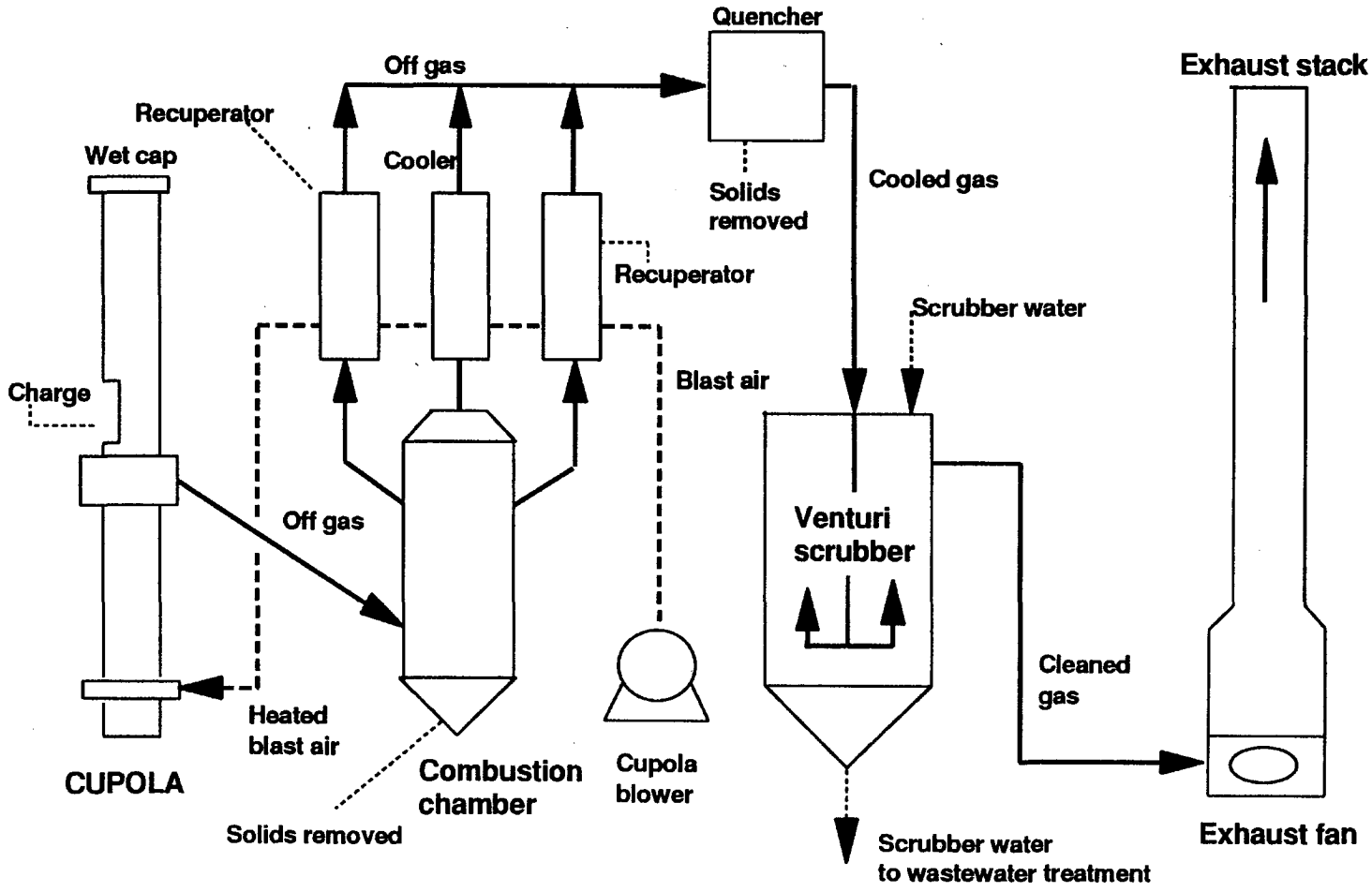

Figure 2-1. Schematic of the cupola gas handling system.

From the recuperators, the gas passes through a quencher, which cools the gas and also removes some of the entrained particulate matter. The gas then enters a venturi scrubber (manufactured by Air Pollution Industries) that is operated at a pressure drop of about 40 in. of water and a water flow rate of about 625 gallons per minute (gal/min). A vacuum is maintained on the system and the gas is moved by a 1200 horsepower (hp) exhaust fan following the scrubber. The cleaned gas is exhausted through a stack. The wastewater from the scrubber is sent to a wastewater treatment recycle system where polymers are added to assist in settling fine particles, and 99 percent of the water is recycled to the scrubber (with a one percent blowdown to the city's wastewater treatment facility). Particulate matter emissions from the scrubber are limited to 0.15 pounds (lb) per 1,000 lb of gas by the State.

The plant has instrumentation available to monitor several parameters associated with the emission control system, including the pressure drop across the scrubber, the water flow rate, electric current to the fan, and gas temperature. Temperature and blast rate for the cupola are monitored routinely. In addition, an accurate measure of the melting rate (e.g., for use in normalizing mass emission rates by production rate) can be obtained from the charging data sheets.

The plant buys scrap from other GM plants and controls the quality because scrap quality directly affects the quality of the castings. However, plant personnel pointed out that it would be difficult to have a parameter to measure scrap quality that could be used to make valid comparisons among different foundries.

2.2.2 Pouring, Cooling and Shakeout

The two iron pouring lines are labeled Lines 3 and 4. Plant personnel indicated that Line 4 was the best candidate for testing because it is newer and the layout is more amendable to sampling. A simplified schematic of the capture and control equipment for Line 4 is given in Figure 2-2. The line has a capacity of 270 molds per hour with two engine blocks per mold. Each horizontal mold contains 3,300 lbs of green sand (lake sand, sea coal, and bentonite). The typical properties that are measured and the range during the test days are given in Table 2-2.

TABLE 2-2. TYPICAL RESULTS FROM GREEN SAND ANALYSIS[a]

Property	Range
Moisture (%)	2.8 to 3.3
Clay (%)	6.8 to 7.4
Compactability (%)	3.6 to 4.8
Green strength (psi)	164 to 221
Permeability (AFS units)	114 to 130
Loss on ignition (%)	3.8 to 5.0

[a] From analyses during the first shift of the test days.

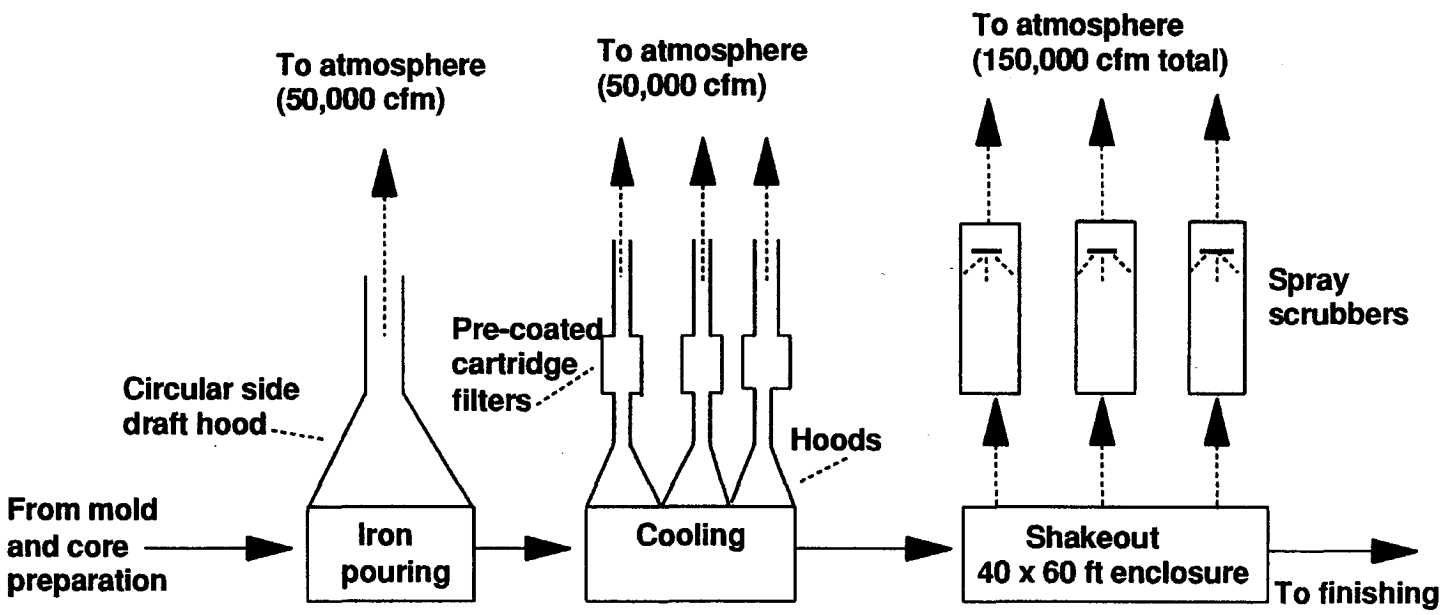

Figure 2-2. Schematic of capture and control systems for Line 4.

The cores used in the molds include both hot box and cold box systems with phenol-formaldehyde. For the 4-cylinder engine, 15.7 lbs of hot box cores and 74.5 lbs of cold box cores are used for a total core weight of 90.2 lbs per block or 180.4 lbs per mold. For the 6-cylinder engine, 17.9 lbs of hot box cores and 95.2 lbs of cold box cores are used for a total core weight of 113 lbs per block or 226 lbs per mold. The chemicals used to make the cores are summarized in Table 2-3. The materials used for core dipping are primarily minerals, such as crystalline silica (quartz), mica, aluminum silicate, along with graphite, clay and water.

The pouring station for Line 4 is automated and uses 6 ladles in a circular configuration. A large, circular side draft hood evacuates the entire pouring area at a rate of about 50,000 cfm. During the testing, no significant visible emissions were observed escaping capture from the pouring operation. The captured emissions are ducted overhead through the roof to the atmosphere. During the test days, both 4- and 6-cylinder engine blocks were poured on Line 4. The pouring weight of iron for the 4-cylinder block is 202.8 lbs to produce a casting of 116.2 lbs. For the 6-cylinder block, the pouring weight is 250.4 lbs and the casting weight is 149.2 lbs.

The cooling line is enclosed and has a series of hoods throughout the line that evacuate the enclosures at a rate of about 50,000 cfm and send the emissions to a bank of pre-coated cartridge filters to remove particulate matter. The cooling line is evacuated through three main ducts that send the cooling emissions to three separate sets of cartridge filters. The residence time of the cooling line is about 25 minutes (min).

The shakeout operation is totally enclosed in a small, evacuated building (roughly 40 by 60 feet [ft]). The room is evacuated at about 150,000 cfm, and the captured emissions are sent to three spray scrubbers that have 2 to 3 stages for cleaning.

The plant monitors the pressure drop across the cartridge filters used for the cooling emissions and also the pressure drop across the shakeout scrubbers. No other parameters associated with the control equipment are monitored.

TABLE 2-3. CHEMICALS USED IN CORE MAKING AND MOLD SPRAYING[a]

Product	Function	Chemical	Percent
Acme 45MR1BS®	Hot box catalyst	Urea	30 to 35
		Ammonium hydroxide	0.1 to 1
		Ammonium nitrate	10 to 15
		Water	45 to 50
		Ammonium chloride	0.1 to 1
		Siloxanes and silicones	1 to 5
Acme 745LF®	Phenolic resin for hot box cores	Formaldehyde	1 to 5
		Phenol	5 to 10
Acme-flow 2012®	Phenolic resin for cold box cores	Formaldehyde	0.1 to 1
		Phenol	1 to 5
		Ethyl 3-ethoxypropionate	5 to 10
		Heavy aromatic solvent naphtha	10 to 30
Acme-flow 2052A®	Isocyanate resin for cold box Part 2	Diphenylmethane 4,4'-Diisocyanate	10 to 30
		Kerosine	5 to 10
		Polymeric Diphenylmethane Diisocyanate	30 to 50
		Isocyanic acid, methylenediphenylene ester	1 to 5
		Heavy aromatic solvent naphtha	10 to 30
Tribonol®	Mold spray	Zircon	90
		Diethylene glycol polymer with 1-chloro-2,3-epoxypropane	10

[a] From the manufacturer's material safety data sheets (MSDS).

2.3 PROCESS AND CONTROL DEVICE MONITORING RESULTS

2.3.1 Cupola B

During each test run, several parameters associated with the operation of the cupola and the Venturi scrubber were monitored and recorded. For the cupola, these parameters included the blast air flow rate, the relief stack flow rate, the hot blast temperature, oxygen feed pressure, and the combustion chamber temperature. In addition, information was obtained on each time the cupola was charged and the charge composition. Each time period that the blast was stopped (and the emission testing was also stopped) was also recorded.

The plant had instrumentation installed to monitor several parameters associated with the Venturi scrubber, including the water flow rate to the scrubber, flow rate of makeup water, inlet temperature, inlet pressure, pressure drop, and the pressure (vacuum) at the induced draft fan. These parameters, with the exceptions noted below, were monitored and recorded during the test. Before the sampling runs were begun, the process observers worked with the plant personnel to determine if the instruments indicating venturi pressure drop and water flow rate to the scrubber were showing correct readings. Calibration of the pressure drop instrumentation, completed early on September 24, consisted of a direct manometer reading at the venturi followed by adjustment of the pressure drop reading in the control room. Calibration of the water flow rate reading could not be confirmed during the sampling campaign. After the testing was completed, plant personnel confirmed that the instrument had been calibrated and that the water flow rate was 625 gal/min.

Table 2-4 summarizes the major monitoring results for the cupola during each test run, and Table 2-5 provides the cupola charging data for about 12 hours (hr) during each test day. The blast air temperature and flow rate are plotted for the four test runs in Figures 2-3 and 2-4. The blast air rate showed very little variability during the test; however, there were significant differences in the temperature of the hot air blast, which averaged 464° to 488°F during Runs 1 and 2 and 364° to 366°F during Runs 3 and 4.

The pressure drop across the Venturi scrubber increased during each run. At the request of EPA personnel, adjustments were made after the first test run to increase the scrubber pressure and to maintain a range closer to the original design specifications. The pressure drop averaged 33, 35, 38, and 42 in. of water for Runs 1, 2, 3, and 4 respectively.

TABLE 2-4. SUMMARY OF CUPOLA MONITORING RESULTS

Parameter	Run	Average	Range
Blast flow rate (cfm)	1	21,400	21,000 - 22,200
	2	22,100	21,800 - 22,500
	3	21,900	21,700 - 22,800
	4	21,800	21,000 - 22,400
Hot blast temperature (°F)	1	488	443 - 539
	2	464	448 - 488
	3	366	336 - 385
	4	364	327 - 409
Oxygen (psig)	1	30	30
	2	49	43 - 61
	3	50	40 - 65
	4	59	54 - 65
Combustion chamber temperature (°F)	1	not available	
	2	1,557	1,401 - 1,669
	3	1,518	1,276 - 1,633
	4	1,608	1,495 - 1,670
Melting rate (tons/hr)[a]	1	38.8	--
	2	41.7	--
	3	45.4	--
	4	43.5	--
Time blast stopped (min)	1	156	--
	2	6	--
	3	29	--
	4	15	--
Scrubber Δp (in. water)	1	33.4	33 - 35
	2	35	32 - 37
	3	38	36 - 40
	4	42	40 - 42

[a] Adjusted for the downtime when the blast was stopped (i.e., the downtime was subtracted from the operating time when determining the melting rate).

TABLE 2-5. SUMMARY OF CUPOLA CHARGING DURING THE TEST DAYS

9/23/97*		9/24/97		9/25/97	
Time period	Tons charged	Time period	Tons charged	Time period	Tons charged
--	--	6:00-7:05	54	7:11-8:05	42
--	--	7:13-8:02	42	8:11-9:01	36
--	--	8:25-9:14	30	9:10-10:07	42
--	--	9:19-10:09	42	10:12-11:06	42
--	--	10:14-11:05	36	11:10-12:02	36
--	--	11:14-12:05	42	12:12-13:03	42
--	--	12:10-13:02	42	13:12-14:07	42
--	--	13:20-14:03	42	14:18-15:10	48
--	--	14:08-15:12	54	15:27-16:02	30
13:58-14:49	48	15:17-16:08	42	16:11-17:03	42
15:51-16:19	30	16:21-17:10	36	17:12-17:59	42
18:20-19:12	24	17:17-18:18	36	18:07-19:10	42
Average rate (tons/hr)	38.8	Average rate (tons/hr)	40.5	Average rate (tons/hr)	40.6

* Run 1 on this day was a short test with 110 min of sampling between 14:10 and 18:41.

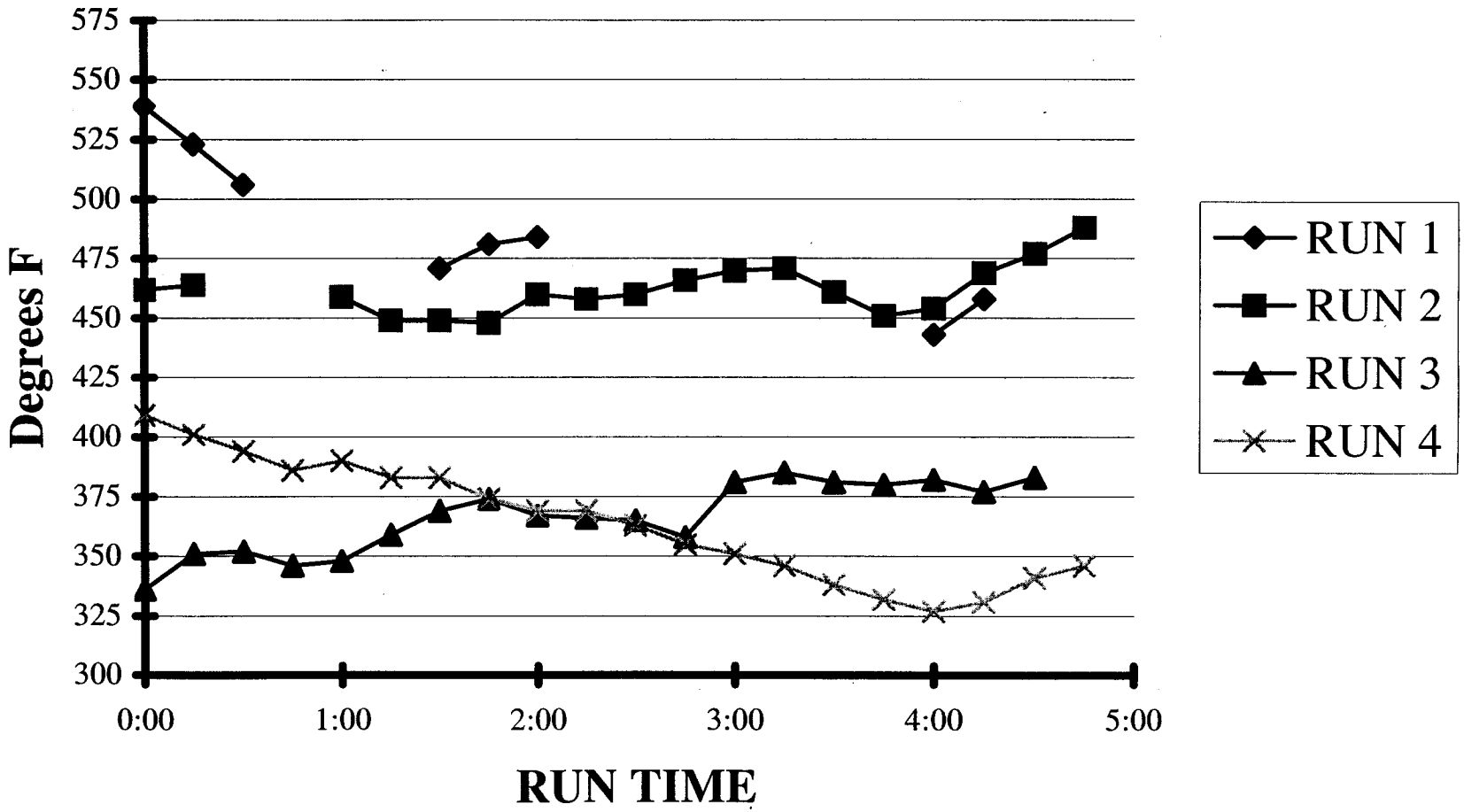

Figure 2-3. Hot blast temperature during each test run.

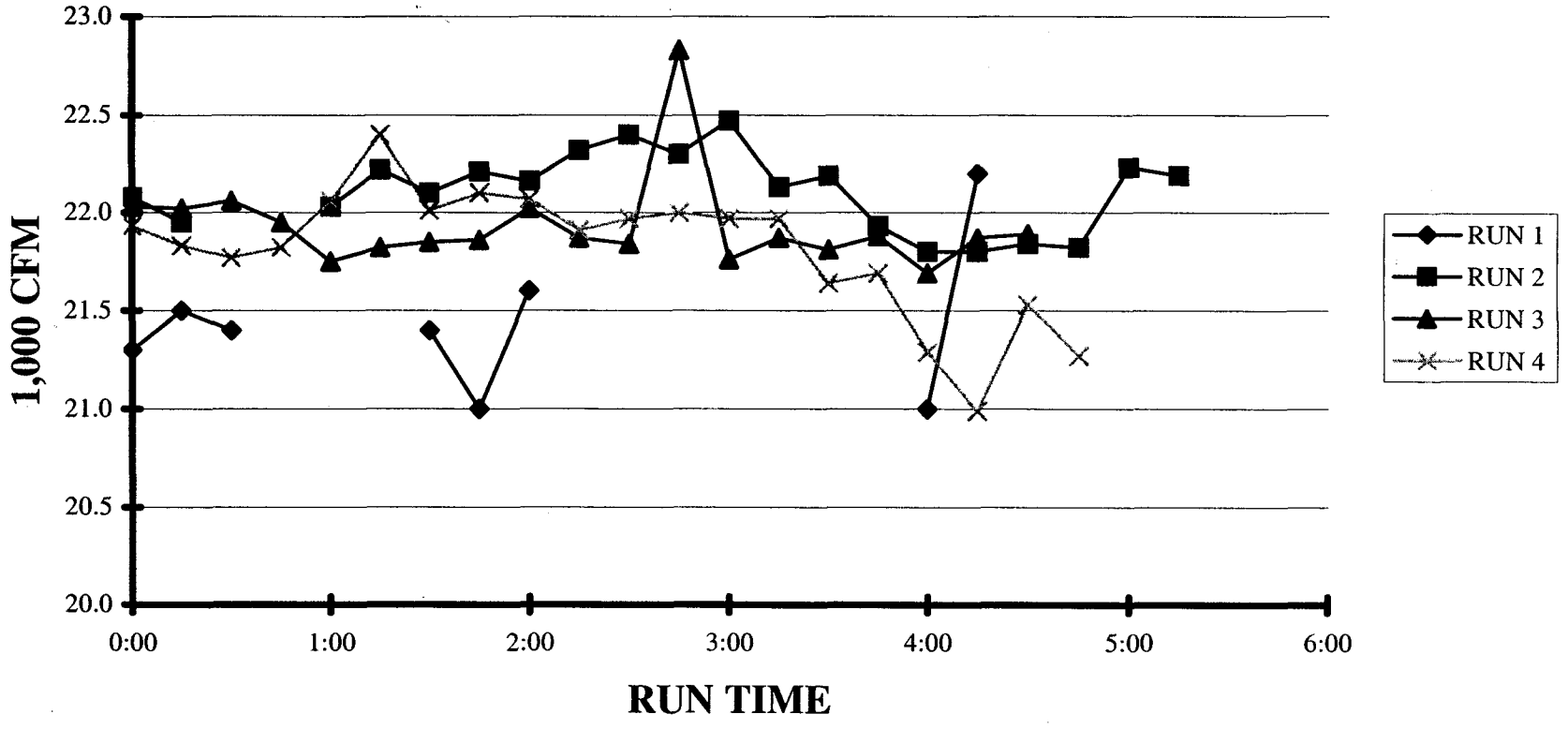

Figure 2-4. Hot blast rate during the test runs

2.3.2 Mold Line 4

During the testing of Line 4, a record was kept of the rate at which the line moved (e.g., molds per hour) and pouring was observed to identify when broken molds were not poured and the temperature of the molten iron when poured. Several observations were made of the time to "light off" after pouring, when the vapors escaping from the mold self-ignited. The first hole ignited on average about 6 to 8 seconds (sec) after pouring, and all holes were lit 11 to 18 sec after pouring. During the testing of the scrubbers used on the shakeout operation, the pressure drop across the scrubbers was recorded and ranged from 13.9 to 16.5 in. of water.

Table 2-6 provides a summary of the number and types of molds that were processed during each test day from plant records, and Table 2-7 provides a summary of the quantity of iron poured and the amount of downtime during each hour of the testing days. Table 2-8 contains the mold counts made by the process observers when testing was being performed. Table 2-9 provides an estimate of the tons of iron poured per hour and the number of molds poured per hour during the testing periods on Line 4.

During the testing days, the pouring temperature of the iron was maintained within a narrow range of 2,743° to 2,818°F. A typical analysis of the iron (from 9/25/97) showed 3.11 percent carbon, 0.13 percent sulfur, and 2.28 percent silicon.

TABLE 2-6. SUMMARY OF NUMBER OF MOLDS POURED ON LINE 4

Hour (first shift)	Number of molds poured[a]							
	9/22/97		9/23/97		9/24/97		9/25/97	
	4-cyl.	6-cyl.	4-cyl.	6-cyl.	4-cyl.	6-cyl.	4-cyl.	6-cyl.
1	223	--	224	--	152	--	180	--
2	64	126	16	165	194	--	235	--
3	--	220	--	214	59	--	155	48
4	--	185	--	208	0	--	--	208
5	56	36	--	217	171	--	--	245
6	237	--	225	--	114	98	48	126
7	37	46	205	--	--	195	202	--
8	--	217	70	76	--	227	176	18
9[b]	--	106	--	108	83	109	--	108
	--	--	--	--	104	--	--	--

[a] Does not include broken molds that were not poured.
[b] The line usually shut down around 3 p.m.

TABLE 2-7. SUMMARY OF METAL POURED AND DOWNTIME FOR LINE 4

Hour (first shift)	Tons of metal poured[a]				Downtime (minutes)			
	9/22/97	9/23/97	9/24/97	9/25/97	9/22/97	9/23/97	9/24/97	9/25/97
1	45.2	45.4	30.8	36.5	8	10	26	20
2	44.5	44.6	39.3	47.7	17	20	17	8
3	55.1	53.6	12.0	43.5	11	12	47	15
4	46.3	52.1	0.0	52.1	15	14	60	14
5	20.4	54.3	34.7	61.3	40	12	22	6
6	48.1	45.6	47.7	41.3	7	10	13	21
7	19.0	41.6	48.8	41.0	42	14	17	15
8	54.3	33.2	56.8	40.2	12	26	10	17
9	26.5	27.0	44.1	27.0	0	0	17	0
	--	--	21.1	--	--	--	1	--

[a] Based on 202.8 lbs per 4-cylinder engine block (405.6 lbs per mold) and 250.4 lbs per 6-cylinder engine block (500.8 lbs per mold).

TABLE 2-8. LINE 4 MOLD COUNTS DURING TESTING PERIODS

Date: 09/22/97				
Time	Number of molds[a]	Molds/hr[b]	Cumulative molds/hr[c]	Comments
1:41 pm	0	0	0	6-cylinder engine blocks; 8 broken molds were not poured between 1:30 and 3:00
1:42 pm	5	300	300	
1:45 pm	14	280	285	
1:50 pm	21	252	267	
2:00 pm	40	240	253	
2:15 pm	57	228	242	
2:20 pm	21	252	243	
2:25 pm	21	252	244	
2:30 pm	22	264	246	
2:40 pm	28	168	233	
2:45 pm	22	264	235	
2:50 pm	21	252	237	
2:53 pm	17	340	241	
2:55 pm	3	90	237	
3:00 pm	16	192	234	
Date: 9/23/97				
Time	Number of molds[a]	Molds/hr[b]	Cumulative molds/hr[c]	Comments
8:39 am	0	0	0	6-cylinder engine blocks; 26 6-cylinder molds not poured between 8:00 and 12:00
8:40 am	5	300	300	
8:43 am	14	280	285	
8:57 am	54	231	243	
9:23 am	93	215	226	
9:41 am	69	230	227	
10:00 am	64	202	221	
10:18 am	73	243	225	
10:30 am	32	160	218	
10:42 am	49	245	221	
10:54 am	44	220	221	
11:02 am	35	263	223	
11:10 am	34	255	225	
11:42 am	109	204	221	Switched to 4-cylinder blocks at 11:45; 3 4-cylinder molds not poured
12:01 pm	78	246	224	

TABLE 2-8. (continued)

Date: 9/24/97				
Time	Number of molds[a]	Molds/hr[b]	Cumulative molds/hr[c]	Comments
11:03 am	0	0	0	4-cylinder engine blocks; 5 molds not poured
11:06 am	12	240	240	
11:08 am	9	270	252	
11:10 am	9	270	257	
11:35 am	94	226	233	
11:51 am	68	255	240	
12:04 pm	44	203	232	
Date: 9/25/97				
Time	Number of molds[a]	Molds/hr[b]	Cumulative molds/hr[c]	Comments
8:57 am	0	0	0	4-cylinder engine blocks; 3 molds not poured
9:17 am	68	204	204	
9:30 am	41	189	198	Switched to 6-cylinder at 9:30; 14 molds not poured
9:48 am	72	240	213	
9:58 am	42	252	219	
10:15 am	52	184	212	
10:26 am	38	207	211	
10:41 am	59	236	215	
10:57 am	64	240	218	
11:25 am	118	253	225	
11:32 am	29	249	226	

[a] Number of molds counted for the incremental time period.
[b] Rate based on the incremental time period.
[c] Cumulative rate based on number of molds from the start time; this is the most accurate measure of the rate over the time period (i.e., the last bolded number in this column).

TABLE 2-9. MOLD LINE 4 PRODUCTION DURING TESTING PERIODS

Date	Time Period	No. of molds poured		Molds/hr poured	Tons/hr poured[a]
		4-cylinder	6-cylinder		
9/22/97	1:41 - 3:00 pm	--	300	227	56.9
9/23/97	8:39 - 12:01 pm	75	652	216	53.0
9/24/97	11:03 - 12:04 pm	231	--	226	45.8
9/25/97	8:57 - 11:32 am	106	460	219	53.0

[a] Based on 405.6 lbs for 4-cylinder molds and 500.8 lbs for 6-cylinder molds.

3.0 TEST LOCATIONS AND GAS COMPOSITION

Figure 3-1 is an overview of the cupola gas handling system and the locations of the sample points. Figure 3-2 is a more detailed schematic of the scrubber inlet and scrubber outlet (exhaust stack). The cupola inlet and outlet were sampled concurrently.

Figure 3-3 is a schematic showing detailed views of the sampling points for the pouring, cooling, and shake-out. One pouring duct was sampled, three cooling ducts (Main, R, S) were sampled, and three shake-out stacks (3, 4, 5) were sampled.

3.1 VENTURI SCRUBBER OUTLET - STACK

The test ports on the stack (Location B) are located on the roof at about 140 ft above ground level and 50 ft north of the venturi scrubber inlet duct. Access to the stack ports is by stairways in the interior of the cupola building, a short exterior catwalk, and stairs. Sufficient ports were installed to allow simultaneous FTIR and manual method sampling.

3.2 VENTURI SCRUBBER INLET DUCT

The test ports were installed on the inlet duct (Location A) and located on the roof about 140 ft above ground level. Access to the inlet location on the roof was the same route as to the stack. Testing was run in a 66-in. interior-diameter duct.

3.3 MOLD POURING DUCT

The duct is inside the main facility, with the ports at a height of approximately 25 ft above the shop floor. The sampling location was identified as location "E" by GM Powertrain personnel. Access to the ports is available from a little-used stair platform, although access to one port required the use of scissors-type platform. The ports were used by MRI for obtaining volumetric flow, diluent, moisture, and FTIR data across the 51.75-in. interior diameter duct. Previous testing indicated a particulate loading range of 0.0171 to 0.0312 grains per dry standard cubic foot (gr/dscf). Gas temperatures in this duct ranged from 80° to 101°F. Flow data are reported in Table 3-1.

3.4 MOLD COOLING LINE

Testing at the mold cooling line occurred at three separate ducts, identified in this report as Main, R, and S. Titles used to identify the ducts are the same as those used by GM Powertrain personnel. The Main duct is circular with ports accessed approximately 10 ft above the facility

first floor level. Ducts R and S are both rectangular with dimensions 34 by 68 in. Ducts R and S were accessed at two different locations in the facility upper level.

Previous testing on the Main duct reported particulate loading that ranged from 0.00132 to 0.00206 gr/dscf. Temperatures in the three ducts ranged from 94° to 115°F. MRI collected volumetric flow rates, moisture content, and diluent gas information for this location.

3.5 MOLD SHAKE-OUT HOUSING

The mold shake-out housing and its ducting system are located inside the main facility. Each duct leads to a scrubber, then is vented through stacks to atmosphere on the roof. Sampling of three shake-out housing stacks (Nos. 3, 4, and 5) on the roof level was performed. Four-in. test ports following the scrubbers were utilized on the stacks at a height of approximately 3 ft above the roof. MRI collected volumetric flow, diluent, moisture, and FTIR data across the diameter of the duct interiors.

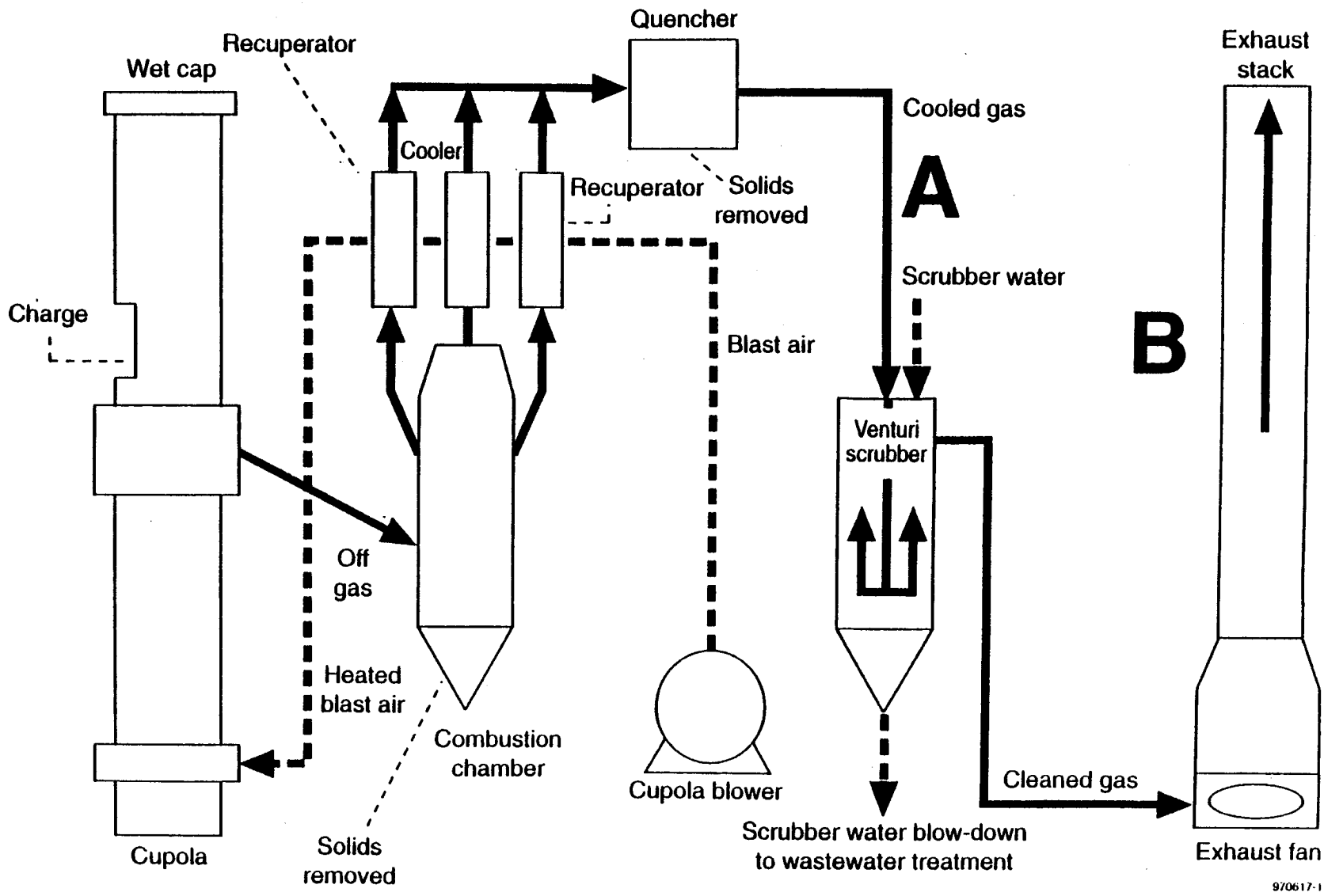

Figure 3-1. Schematic of GM Saginaw cupola gas handling system sampling points A and B.

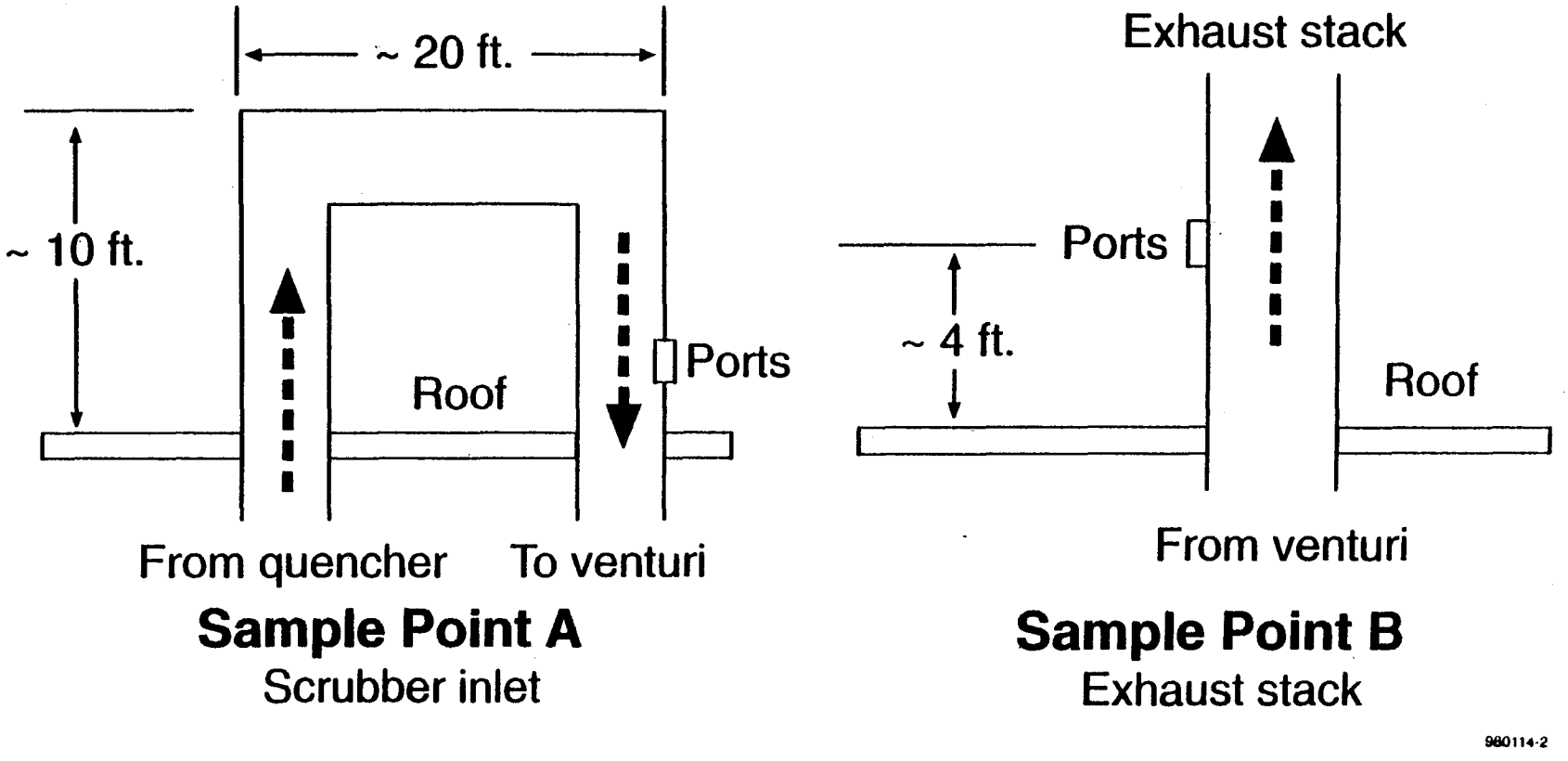

Figure 3-2. Schematic of scrubber inlet and scrubber outlet; sampling points A and B.

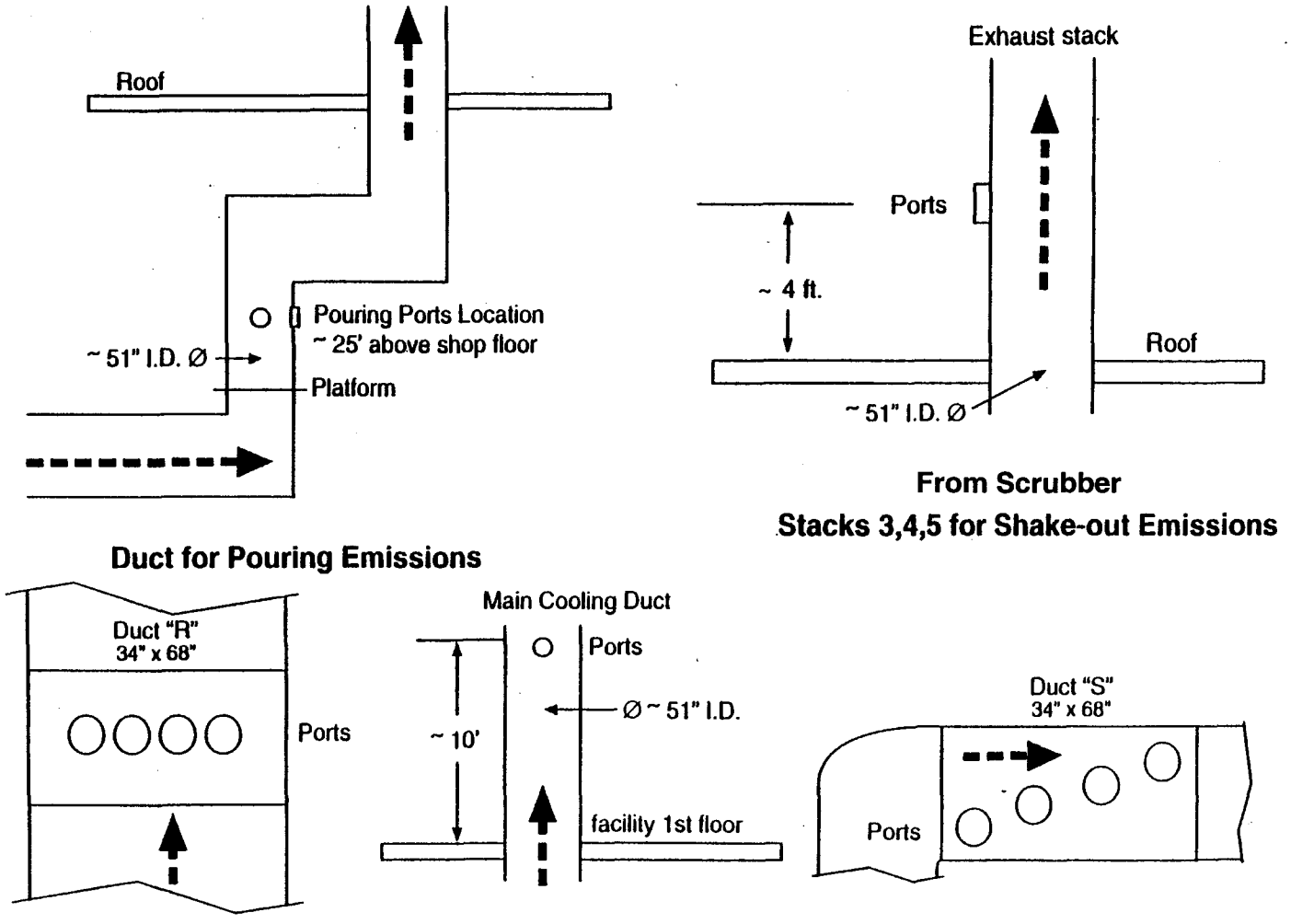

Figure 3-3. Pouring, cooling, and shake-out sampling points.

3.6 VOLUMETRIC FLOW

Table 3-1 summarizes the gas composition and flow data provided by PES for the cupola test locations. PES provided volumetric flow rates, moisture content, gas molecular weight, etc. as part of their manual testing; therefore, MRI did not conduct these tests.

Table 3-2 summarizes the gas composition and flow data for the sampling conducted at the pouring, cooling, and shake-out housing. Measurements for velocity, flow, and oxygen (O_2) and carbon dioxide (CO_2) concentrations were conducted and calculated following EPA Test Methods 1, 2, and 3B referenced in 40 CFR Part 60, Appendix A. Moisture content of the stack gas was calculated using wet bulb/dry bulb measurements. Records of volumetric flow data are located in Appendix A.

TABLE 3-1. CUPOLA GAS COMPOSITIONS AND FLOW SUMMARY

Cupola Test Data [a]				
Run No.	1	2	3	4
Date	23-Sep-97	24-Sep-97	25-Sep-97	25-Sep-97
Scrubber Inlet - Location A				
Oxygen, %	12.3	12.7	12.2	11.9
Carbon dioxide, %	8.9	9.4	10.0	11.0
Moisture content, %	20.0	30.0	28.9	30.3
Volumetric flow rate, dscfm	60,183	58,682	56,090	54,702
Volumetric flow rate, dscmm	1,704	1,662	1,588	1,549
Scrubber Outlet - Location B (Exhaust Stack)				
Oxygen, %	16.7	11.8	12.5	12.4
Carbon dioxide, %	4.0	10.6	9.7	10.3
Moisture content, %	12.6	16.4	9.1	9.1
Volumetric flow rate, dscfm	66,304	64,783	63,143	64,748
Volumetric flow rate, dscmm	1,878	1,834	1,788	1,833

[a]The data were collected by PES with their Method 29 manual sampling trains. Two manual runs were performed on 9/25 from 8:38 to 11:49, and from 15:12 to 18:45. The FTIR measurements were performed semi-continuously from about 8:00 to about 17:00.

TABLE 3-2. MOLD POURING, COOLING, AND SHAKE-OUT HOUSING GAS COMPOSITION AND FLOW SUMMARY

Mold Pouring				
Sample location	**E**			
Date	23-Sept-97			
Carbon dioxide, %	0.2	--		--
Oxygen, %	20.7	--		--
Moisture content, %	1.7	--		--
Gas stream velocity, fps	65.8	--		--
Volumetric flow rate, dscfm	52,824			
Volumetric flow rate, dscmm	1,495	--		--
Mold Cooling				
Sample location	**Main Duct**	**R Duct**	**S Duct**	
Date	25-Sept-97	24-Sept-97	24-Sept-97	Average
Carbon dioxide, %	0.3	0.3	0.2	0.3
Oxygen, %	20.2	19.8	20.4	20.1
Moisture content, %	1.9	1.7	1.7	1.8
Gas stream velocity, fps	40.6	15.0	51.7	35.7
Volumetric flow rate, dscfm	30,674	13,118	45,393	29,645
Volumetric flow rate, dscmm	868	371	1,285	838.9
Shake-out housing[a]				
Sample location	**Stack 3**	**Stack 4**	**Stack 5**	
Date	22-Sept-97	22-Sept-97	22-Sept-97	Average
Carbon dioxide, %	0.2	0.2	0.2	0.2
Oxygen, %	20.4	20.1	20.3	20.3
Moisture content, %	3.3	3.8	3.3	3.5
Gas Stream velocity, fps	52.2	51.5	47.9	50.5
Volumetric flow rate, dscfm	41,046	40,679	37,751	39,825
Volumetric flow rate, dscmm	1,162	1,151	1,068	1132.4

[a]The velocity traverses were performed and stack temperatures were measured on 9/22/97. The Tedlar bags were collected and the Orsat analyses were performed on 9/23 and 9/24/97.

4.0 RESULTS

4.1 TEST SCHEDULE

The testing at GM Powertrain, Saginaw, Michigan was performed from September 21 to September 26, 1997. Table 4-1 summarizes the sampling schedule. A complete record of all FTIR sampling is in Appendix B. The FTIR sampling at the cupola locations was coordinated with the manual sampling conducted by PES. The FTIR sampling at the mold cooling line and the mold shake-out housing were conducted independently.

TABLE 4-1. TEST SCHEDULE AT GM POWERTRAIN, SAGINAW, MICHIGAN

Date	Task	Location[a]
9/21/97	Arrive on site and started set-up at cupola.	▸Cupola
9/22/97	Complete cupola set-up; Obtain shake-out flow data.	▸Cupola ▸Shake-out Stacks
9/23/97	Test Shake-out #3 and #4 Test Pouring "E" Cupola Test Run 1 w/ FTIR 14:43 - 18:45	▸Shake-out Stacks ▸Pouring Duct ▸Cupola
9/24/97	Test Shake-out #3 and #5 Test Cooling "S" Cupola Test Run 2 w/ FTIR 8:41 - 13:04	▸Shake-out Stacks ▸Cooling Ducts ▸Cupola
9/25/97	Test Cooling "R" and "Main" Collected Background Sample in facility Cupola Test Run 3 w/ FTIR 8:54 - 13:50	▸Cooling Ducts ▸Facility 1st Level ▸Cupola
9/26/97	Packed equipment and departed site	

[a] Location descriptions are in Section 3.

4.2 FIELD TEST PROBLEMS AND CHANGES

The cupola gas at GM Powertrain contained high concentrations of both water vapor and CO_2 with respect to other compounds. Analyte spiking for quality assurance was conducted using toluene and formaldehyde vapor. The CO_2 spectrum interfered with the strongest toluene infrared band near 730 cm^{-1} so the weaker toluene absorbance, in the analytical region 2,850 to 3,100 cm^{-1} range, was used for the analysis. The presence of other hydrocarbon species contributed to the total infrared absorbance in the 2,850 to 3,100 cm^{-1} region.

Moisture collected in the pitot tubes used to monitor pressure drop in the ducts. The pitot lines were cleaned regularly by back-blowing pitot lines with compressed nitrogen gas.

4.3 FTIR RESULTS

The FTIR results from the mold cooling and pouring and shake-out housing ducts are presented in Tables 1-1 to 1-3. A summary of the FTIR results from the cupola scrubber inlet and outlet locations is presented in Table 1-4. Detailed FTIR results from the cupola scrubber inlet and outlet are presented in Appendix B in Tables B-1 and B-2.

4.3.1 Tedlar Bag Samples

Tables 1-1 to 1-3 present the FTIR results and the mass emissions rates for the Tedlar bag samples. The emissions rates for the pouring process were determined using the average concentrations in the two bag samples taken from a single duct.

Three ducts were sampled at the cooling process and at the shake-out housing. The emissions rates were calculated for each duct, and then summed to obtain the total emissions from the process. For example, the methanol concentrations were 1.8, 2.5, and 4.5 ppm at the main, R, and S cooling ducts, respectively. The methanol mass emissions were calculated using the flow data in Table 3-2 to be 0.28, 0.17, and 1.03 lb/hr in the main, R, and S cooling ducts, respectively. The total methanol emission rate was the sum of the emissions in each duct, or 1.48 lb/hr. Only the total emission rates are shown in Tables 1-1 to 1-3.

The moisture content was lower at the mold process locations so the calculated uncertainties in the results were also relatively small compared to the uncertainties for the scrubber inlet and outlet results. None of the bag samples were spiked.

Emissions from the mold cooling and shakeout housing included CO, methane, methanol and ethylene. The emissions also contained a mixture of heavier aliphatic hydrocarbon compounds. In the draft report the mixture of heavier hydrocarbons was represented by "hexane" because hexane and isooctane are the only aliphatic hydrocarbons in the EPA library of HAP reference spectra. There are many hydrocarbon compounds that are structurally similar to hexane and have similar spectral features. Since the draft report was submitted, EPA directed MRI to measure quantitative spectra of some additional compounds. MRI selected some candidate compounds that were likely components of the sample mixture and measured spectra of butane, n-heptane, pentane, 1-pentene, 2-methyl-1-pentene, 2-methyl-2butene, 2-methyl-2-pentene, and 3-methylpentane. MRI also measured new high-temperature spectra of the HAPs hexane and isooctane. The new spectra were used in revised analyses that gave the results presented in

Tables 1-1 to 1-3. The new spectra made it possible to better represent the sample mixture spectrum and the reported hexane concentrations are lower compared to the draft results. The revised toluene results are similar to the draft toluene results because the addition of the new spectra did not significantly affect the analysis of the aromatic compounds in the mixture.

Samples collected at the pouring process also contained methane, ethylene, and CO, but at lower concentrations. Heavier hydrocarbons, such as methanol, toluene and hexane were not detected at the pouring process.

Figure 4-1 is a plot of a spectrum of a sample taken from a cooling duct. Reference spectra of water and methane have been scaled and subtracted from the original sample spectrum to give the spectrum plotted in Figure 4-1. This figure also shows a reference spectrum of methanol plotted underneath the sample spectrum. The presence of methanol and ethylene are clearly indicated in Figure 4-1. Figure 4-2 shows the same two spectra as Figure 4-1 plotted in the region near 3,000 cm-^{1}. It is clear from Figure 4-2 that most of the infrared absorbance near 2,900 cm^{-1} cannot be attributed to the methanol. Figure 4-3 shows the same sample spectrum as in the previous two figures, but it is plotted with reference spectra of hexane and toluene. The

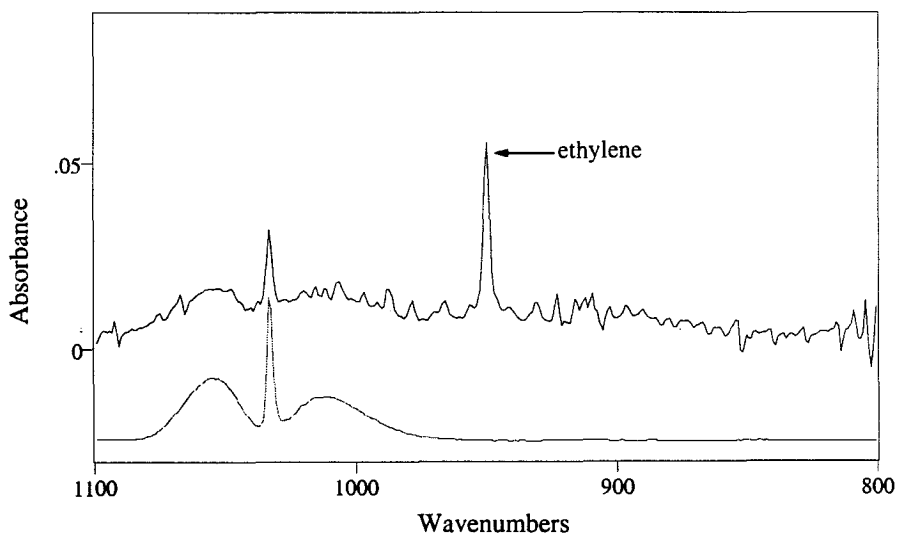

Top trace, Sample from the cooling line, "cools102"; bottom trace, methanol reference spectrum 104a4ase offset by -.025

Figure 4-1. Sample spectrum from the cooling process plotted with a methanol reference spectrum.

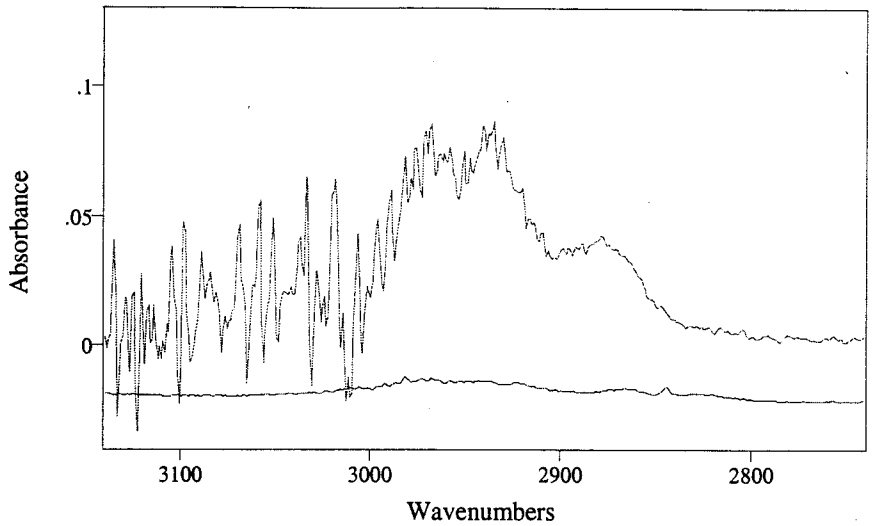

Top trace, Same sample from cooling line "cools102"; bottom trace, methanol reference spectrum 104a4ase offset by -.025

Figure 4-2. Sample spectrum from the cooling process plotted with a methanol reference spectrum shown in a different frequency region.

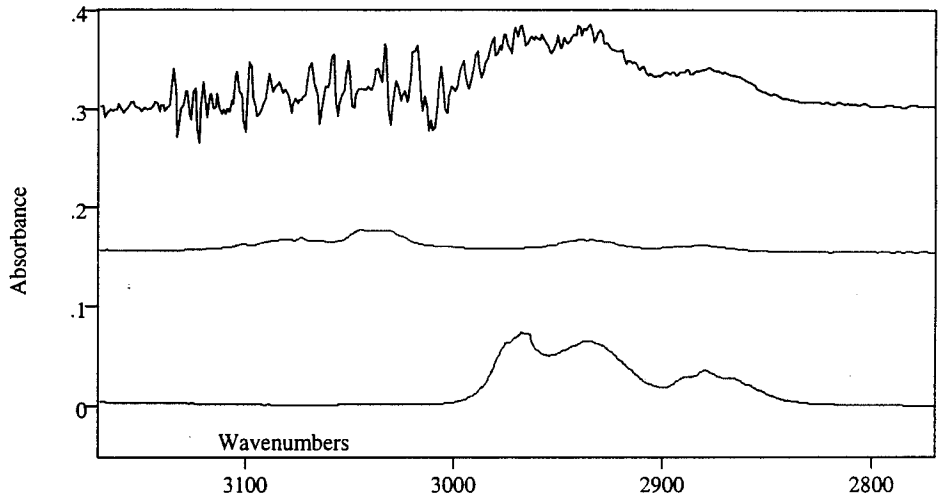

Top trace, "cools102" after water and methane have been subtracted. Middle, toluene reference spectrum, 153a4arc, which has been scaled by a factor of 0.483. Bottom, hexane reference spectrum, 095a4asd, which has been scaled by a factor of 0.285. All three spectra are plotted from -0.05 to + 0.1 absorbance units. Calculation of scaling factors is in section 5.5.

Figure 4-3. Sample spectrum from the cooling process plotted with toluene and hexane reference spectra.

reference spectra have each been multiplied by a scaling factor determined from the reported concentrations of 19.4 parts per million (ppm) for toluene and 11.1 ppm for hexane (Table 1-2, spectrum "cools102"). The scaling factors are derived from equations 5 and 6 in Section 4.5.

In Figure 4-2, it is the region between 3,000 and 2,800 cm^{-1} that was represented by "hexane" in the draft results and is now better represented by including spectra of additional hydrocarbon compounds in the revised results.

4.3.2 Scrubber Inlet and Outlet

The spectra were analyzed for a number of HAP's which were not detected. The analysis was then refined to analyze for the spiked compounds and a smaller number of selected compounds. The hydrocarbon emissions consisted primarily of methane. Formaldehyde and toluene were not detected in the unspiked samples. The uncertainties for carbon monoxide were relatively high. In runs 2 and 3 the calculated CO uncertainties were greater than the reported concentrations.

4.4 ANALYTE SPIKE RESULTS

A toluene gas standard and a formaldehyde permeation tube were used for analyte spiking experiments for quality assurance. The analyte spike results are presented in Tables 4-2 to 4-5.

Table 4-6 compares measured band areas of the EPA toluene reference spectra (deresolved to 2.0 cm^{-1}) and a spectrum of a sample taken directly from the 196.6 ppm toluene cylinder standard. The cylinder standard spectrum was measured at the Saginaw test site. The band area comparison is different from the comparison of the concentrations, corrected for path length and temperature: for a given concentration (ppm-m/K) the infrared absorbance in the cylinder standard spectra is about 45 percent greater than the absorbance in the EPA library spectra. Therefore, the library spectra calculate a toluene concentration that is 45 percent lower than that calculated using the cylinder standard spectra. Tables 4-3 and 4-4 present the toluene spike recoveries using both the library spectra and the cylinder standard spectra.

A similar disagreement was observed in other field tests using another toluene gas standard. One possibility is that there was a systematic error in the original toluene library reference spectra. This could be evaluated by purchasing several toluene gas standards from different sources and doing a comparison similar to that shown in Table 4-6.

The disagreement is compound specific, and the information in Table 4-6 does not apply to the measurements of other analytes. Deresolved calibration transfer standard (CTS) (ethylene calibration) spectra give a path length result that is consistent with the observed number of laser passes and the instrument resolution. But ethylene is a relatively stable compound, which is why it can serve as a CTS. The disagreement is also not related to the deresolution of the toluene spectra because the band areas in the original 0.25 cm^{-1} toluene spectra are nearly equal to the band areas in the deresolved 2.0 cm^{-1} versions of these spectra.

TABLE 4-2. SUMMARY OF FORMALDEHYDE SPIKE RESULTS AT THE SCRUBBER INLET

	Formaldehyde concentration				SF_6 concentration						
Spiked samples	Date	Spike	Unspike	Calc	Spike	Unspike	Calc	DF	Cexp	Δ	% Recovery
INLSP102	9/23/97	0.0	0.5	-0.5	0.424	0.018	0.406	9.8	6.0	-6.5	ND
INLSP201	9/24/97	0.0	0.0	0.0	0.924	0.000	0.924	3.1	10.3	-10.3	ND
INLSP202		9.8	0.0	9.8	0.875	0.000	0.875	3.3	9.7	0.03	100.3
INLSP203		17.7	0.0	17.7	0.909	0.000	0.909	3.0	21.2	-3.6	83.3
INLSP301	9/25/97	22.0	0.0	22.0	0.921	0.000	0.921	3.0	21.5	0.4	102.0
INLSP302		14.6	0.0	14.6	0.729	0.000	0.729	3.8	170	-2.5	85.5
INLSP304		0.0	0.0	0.0	0.483	0.000	0.483	4.6	10.9	- 10.9	ND
								Average recovery =			91.7

Spike and unspike are equal to the measured analyte concentrations in spiked and unspiked samples. Calc is equal to the difference, spike - unspike. DF, the dilution factor, is given in Equation 2 in Section 5.4.2.3. Cexp is equivalent to the calculated 100 % recovery (Equation 3 in Section 5.4.2.3). Δ is equal to Calc - Cexp. % Recovery is equal to (Calc/Cexp) * 100 (Equation 4 in Section 5.4.2.3). ND indicates that formaldehyde was not detected in these samples.

TABLE 4-3. SUMMARY OF TOLUENE SPIKE RESULTS AT THE SCRUBBER INLET

	Toluene concentration				SF_6 concentration						% Recovery	
Spiked samples	Date	Spike	Unspike	Calc	Spike	Unspike	Calc	DF	Cexp	Δ	EPA Ref	Cylinder
INLSP102	9/23/97	34.8	0.0	34.8	0.424	0.018	0.406	9.8	12.7	22.1	273.5	150.0
INLSP202	9/24/97	32.5	0.0	32.5	0.875	0.000	0.875	3.3	23.3	9.2	139.7	76.6
INLSP203		28.9	0.0	28.9	0.909	0.000	0.909	3.0	24.0	4.9	120.6	66.1
INLSP301	9/25/97	29.4	0.0	29.4	0.921	0.000	0.921	3.0	24.3	5.1	121.0	66.3
INLSP302		22.5	0.0	22.5	0.729	0.000	0.729	3.8	19.2	3.3	117.0	64.2
INLSP304		35.5	0.0	35.5	0.483	0.000	0.483	4.6	26.9	8.6	131.9	72.4
										Average recovery =	153.2	82.6

Spike and unspike are equal to the measured analyte concentrations in spiked and unspiked samples. Calc is equal to the difference, spike - unspike. DF, the dilution factor, is given in Equation 2 in Section 5.4.2.3. Cexp is equal to the calculated 100 % recovery (Equation 3 in Section 5.4.2.3). Δ is equal to Calc - Cexp. % Recovery is equal to (Calc/Cexp) * 100 (Equation 4 in Section 5.4.2.3). "EPA Ref" indicates the EPA toluene reference spectra were used in the analysis. "Cylinder" indicates that a spectrum of the toluene cylinder standard was used in the analysis.

TABLE 4-4. SUMMARY OF FORMALDEHYDE SPIKE RESULTS AT THE SCRUBBER OUTLET

	Formaldehyde concentration				SF_6 concentration						
Spiked samples	Date	Spike	Unspike	Calc	Spike	Unspike	Calc	DF	Cexp	Δ	% Recovery
OUTSP104	9/23/97	16.7	0.0	16.7	0.914	0.000	0.914	3.2	10.2	6.5	163.8
OUTSP105		15.5	0.0	15.5	0.866	0.000	0.866	3.4	9.7	5.8	160.6
OUTSP201	9/24/97	9.0	0.0	9.0	1.071	0.000	1.071	2.7	11.9	-2.9	75.7
OUTSP203		13.6	0.0	13.6	1.247	0.000	1.247	2.3	13.9	-0.3	97.6
OUTSP205		20.2	0.0	20.2	0.942	0.000	0.942	2.9	22.0	-1.9	91.6
OUTSP301	9/25/97	30.7	0.0	30.7	1.221	0.000	1.221	2.3	28.6	2.2	107.7
OUTSP305		13.3	0.0	13.3	0.563	0.000	0.563	3.9	12.7	0.6	105.1
									Average recovery =		114.6

Spike and unspike are equal to the measured analyte concentrations in spiked and unspiked samples. Calc is equal to the difference, spike - unspike. DF, the dilution factor, is given in Equation 2 in Section 5.4.2.3. Cexp is equal to the calculated 100 % recovery (Equation 3 in Section 5.4.2.3). Δ is equal to Calc - Cexp. % Recovery is equal to (Calc/Cexp) * 100 (Equation 4 in Section 5.4.2.3).

TABLE 4-5. SUMMARY OF TOLUENE SPIKE RESULTS AT THE SCRUBBER OUTLET

	Toluene concentration				SF_6 concentration						% Recovery	
Spiked samples	Date	Spike	Unspike	Calc	Spike	Unspike	Calc	DF	Cexp	Δ	EPA Ref	Cylinder
OUTSP104	9/23/97	32.6	0.0	32.6	0.914	0.000	0.914	3.2	24.3	8.3	134.2	73.6
OUTSP105		31.2	0.0	31.2	0.866	0.000	0.866	3.4	23.0	8.2	135.4	74.3
OUTSP203	9/24/97	40.6	0.0	40.6	1.247	0.000	1.247	2.3	33.2	7.4	122.4	67.1
OUTSP205		26.2	0.0	26.2	0.942	0.000	0.942	2.9	24.8	1.4	105.5	57.9
OUTSP301	9/25/97	35.7	0.0	35.7	1.221	0.000	1.221	2.3	32.2	3.4	110.6	60.7
OUTSP305		36.1	0.0	36.1	0.563	0.000	0.563	3.9	31.3	4.7	115.1	63.1
										Average recovery =	120.5	66.1

Spike and unspike are equal to the measured analyte concentrations in spiked and unspiked samples. Calc is equal to the difference, spike - unspike. DF, the dilution factor, is given in Equation 2 in Section 5.4.2.3. Cexp is equal to the calculated 100 % recovery (Equation 3 in Section 5.4.2.3). Δ is equal to Calc - Cexp. % Recovery is equal to (Calc/Cexp) * 100 (Equation 4 in Section 5.4.2.3). "EPA Ref" indicates the EPA toluene reference spectra were used in the analysis. "Cylinder" indicates that a spectrum of the toluene cylinder standard was used in the analysis.

TABLE 4-6. COMPARISON OF EPA TOLUENE REFERENCE SPECTRA TO SPECTRA OF TOLUENE CYLINDER STANDARD[1]

				Spectra comparison: based on band areas	Spectra comparison: based on standard concentrations		
Toluene spectra	Source	Band area	Region, cm^{-1}	Ratio (Ra)[2]	(ppm-m)/K	Ratio (Rc)[3]	Rc/Ra, %
153a4ara (2cm-1)	EPA library	23.4	3160.8 - 2650.1	5.4	4.94	4.8	88
153a4arc (2cm-1)	EPA library	4.3		1.0	1.04	1.0	100
tol0923a[1]	GM	38.1		8.8	5.02	4.8	55

[1] When the spectrum of the cylinder standard, "tolo923a" is compared to the reference spectrum, "153a4arc," the ratio of the concentration is 35 percent less than the comparison of the band areas.
[2] For example 5.4 = 23.4/4.3
[3] For example 4.8 = 4.94/1.04

5.0 TEST PROCEDURES

The procedures followed in this field test are described in the EPA Method 320 for using FTIR spectroscopy to measure HAP's and the EPA Protocol for extractive FTIR testing at industrial point sources.[2] The objectives of the field test were to use the FTIR method to measure emissions from the processes, screen for HAP's in the EPA FTIR reference spectrum library, and analyze the spectra for compounds not in the EPA library. Concentrations are reported for compounds that could be measured with FTIR reference spectra. Additionally, manual measurements of gas temperature, gas velocities, moisture, CO_2, and O_2 were used to calculate the mass emissions rates. MRI collected such data for the mold cooling and the shake-out housing ducts, and PES collected the data at the scrubber inlet and outlet.

An extractive sampling system was utilized for the cupola sampling points and gas bags were collected at the pouring, cooling, and shake-out locations. Extractive sampling is generally the preferable approach, however, access restrictions at GM Powertrain prevented extractive sampling at the pouring, cooling, and shake-out locations. Gas samples were collected in Tedlar® bags at these locations and analyzed by FTIR.

5.1 EXTRACTIVE SAMPLING SYSTEM

A schematic of the extractive sampling and spiking system is shown in Figure 5-1.

5.1.1 Sample System Components

The sampling system consists of three separate components:

1. Two sample probe assemblies;
2. Two sample lines and pumps; and
3. A gas distribution manifold cart.

All wetted surfaces of the system are made of unreactive materials, Teflon®, stainless steel, or glass and are maintained at temperatures at or above 300°F to prevent condensation.

The sample probe assembly consists of the sample probe, a pre-filter, a primary particulate filter, and an electronically actuated spike valve. The sample probe is a standard heated probe assembly with a pitot tube and thermocouple. The pre-filter is a threaded piece of tubing loaded with glass wool attached to the end of sample probe. The primary filter is a Balston particulate filter with a 99 percent removal efficience at 0.1μm. The actuated spike

valve is controlled by a radio transmitter connected to a switch on the sample manifold cart. All sample probe assembly components are attached to or enclosed in an insulated metal box.

The sample lines are standard heated sample lines with three 3/8-in. Teflon tubes in 10, 25, 50, and 100 ft lengths. The pumps are heated, single-headed diaphragm pumps manufactured by either KNF Neuberger or Air Dimensions. These pumps can sample at rates up to 20 liters per minute (L/min) depending on the pressure drop created by the components installed upstream.

The gas distribution manifold was constructed for FTIR sampling by MRI. It is built onto a cart that can be operated inside the MRI mobile lab or in an alternate location, if necessary. The manifold consists of a secondary particulate filter, control valves, rotameters, back pressure regulators and gauges, and a mass flow controller. The manifold can control two sample gas stream inputs, eight calibration gases, and has three individual outputs for analyzers. The cart also contains a computer work station and controls for the spike valves and mass flow controller.

5.1.2 Sample Gas Stream Flow

Exhaust gas was withdrawn through the sample probe and transported to the gas distribution manifold. The mold cooling and shake-out processes were each sampled alternately with the two gas handling systems during a single run. The scrubber inlet and outlet were sampled alternately over three runs. Inside the manifold the gas passed through separate secondary particulate filters. Downstream of the secondary filters, a portion of either gas stream could be directed to the FTIR gas cell. The remainder of each gas stream was exhausted through a manifold vent. The scrubber inlet and outlet were sampled alternately (i.e., inlet sample was analyzed for an interval while the outlet sample was exhausted, then outlet sample was analyzed while the inlet sample was vented). A location was selected for analysis using the 4-way gas selection valve on the manifold outlet to the instrument. Gas flow to the instrument was regulated with a needle valve on a rotameter at the manifold outlet.

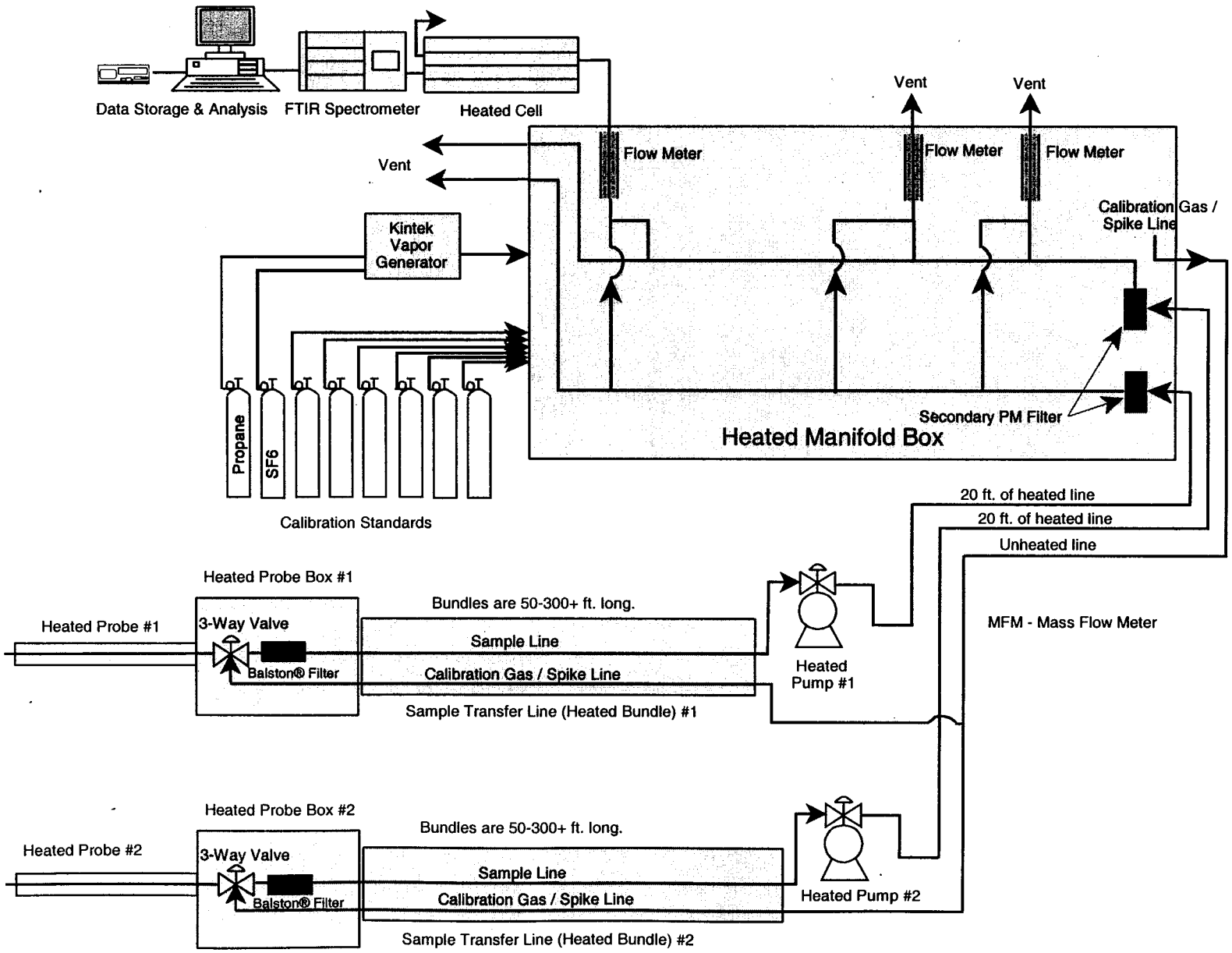

Figure 5-1. Sampling system schematic.

5.2 TEDLAR® GAS BAG SAMPLING

The Tedlar gas bag sampling approach was derived from EPA Method 18. MRI extracted the sample from ports in the designated process ducts using a Teflon sampling line connected to a sampling pump with Teflon-coated heads and exhausting into a Tedlar bag. Prior to connecting the bag to the pump, the sampling pump was operated for one minute in order to purge the sampling system with process gas. The bag was then connected and the pump operated at a flow of about 250 milliliter (ml)/min for a period of approximately 1 hr. Data recording sheets are presented in Appendix A. Periodically during the sample collection, the flow meter was checked for a constant flow rate. At the completion of the sampling period, the bag was sealed and taken to the onsite FTIR instrument for analysis.

5.3 FTIR SAMPLING PROCEDURES

For each run, two locations were sampled using two separate sample systems that were both connected to the main manifold (Figure 5-1). In the first run, the mold cooling and shake-out housing were sampled together and for three runs the scrubber inlet and scrubber outlet were sampled together. A single FTIR instrument was used to analyze samples from both locations during a test run. The manifold's four-way valves allowed the sample from either of two locations to be directed alternately to the FTIR cell. Sample flow was controlled by a needle valve and measured with a rotameter.

FTIR sampling was conducted using either the batch or the continuous sampling procedures described below. All data were collected according to the Method 320 sampling procedure, which is described below.

5.3.1 Batch Samples

In this procedure, the four-way valve on the manifold outlet was turned to divert a portion of the sample flow to the FTIR cell. A positive flow to the main manifold outlet vent was maintained as the cell was filled to just above ambient pressure. The cell inlet valve was then closed to isolate the sample, the cell outlet valve was open to vent the cell to ambient pressure, the spectrum of the static sample was recorded, and then the cell was evacuated for the next sample. This procedure was repeated to collect a desired number of discreet samples.

Batch sampling has the advantage that every sample is independent from the other samples. The time resolution of the measurements is limited by the interval required to evacuate

a sample, pressurize the cell, and record a spectrum. All of the calibration transfer standards, and spiked samples were collected using this procedure. Several spectra in each run were also collected in this manner.

5.3.2 Continuous Sampling

The cell was filled as in the batch sampling procedure, but the cell inlet and outlet valves were kept open to allow gas to continuously flow through the cell. The inlet and outlet flows were regulated to keep the sample in the cell at ambient pressure. The flow through the cell was maintained at about 5 L/min. The cell volume was about 7 liters (L).

The FTIR instrument was automated to record spectra of the flowing sample about every 2 min, and the quantitative analysis was automated to measure pollutant concentrations as each spectrum was recorded. The analytical program was revised after the test was completed and all of the spectra were reanalyzed.

This procedure with automated data collection was used during each of the test runs. Because spectra were collected continuously as the sample flowed through the cell, there was mixing between consecutive samples. The interval between independent measurements (and the time resolution) depends on the sample flow rate (through the cell), and the cell volume.

The Time Constant (TC) defined by Performance Specification 15 for FTIR Continuous Emission Monitoring Systems (CEMS), is the period for one cell volume to flow through the cell. The TC determines the minimum interval for complete removal of an analyte from the cell volume. It depends on the sampling rate (R_s in L/min), the cell volume (V_{cell} in L) and the analyte's chemical and physical properties. Performance Specification 15 defines 5 * TC as the minimum interval between independent samples.

$$TC = \frac{V_{cell}}{R_s} \tag{1}$$

A stainless steel tube ran from the cell inlet connection point to the front interior of the cell. The outlet vent was at the back of the cell so that the flowing sample passed through the greatest portion of the cell volume and minimized the likelihood of a short-circuiting flow.

5.4 ANALYTE SPIKING

There was little information available about HAP emissions from this source, so there was no plan for validating specific HAP's during this test. MRI conducted spiking for quality

assurance (QA) purposes using a toluene in nitrogen standard and a vapor-generated formaldehyde standard.

5.4.1 Analyte Spiking Procedures

The infrared spectrum is ideally suited for analyzing and evaluating spiked samples because many compounds have distinct infrared spectra.

The reason for analyte spiking is to provide a QA check that the sampling system can transport the spiked analytes to the instrument and that the quantitative analysis program can measure the analyte in the sample gas matrix. If at least 12 (independent) spiked and 12 (independent) unspiked samples are measured, then this procedure can be used to perform a Method 301 validation.[3]

The spike procedure follows Sections 9.2 and 13 of EPA Method 320 in Appendix D. In this procedure a gas standard is measured directly in the cell.. This direct measurement is then compared to measurements of the analyte in spiked samples. Ideally, the spike will comprise about 1/10 or less of the spiked sample. The expected concentration of the spiked component is determined using a tracer gas, SF_6. The SF_6 concentration in the direct sample divided by the SF_6 concentration in the spiked sample(s) is used as the spike dilution factor (DF). The analyte standard concentration divided by DF gives the expected value of the spiked analyte concentration.

5.4.2 Analysis of Spiked Results

The statistical procedures in Section 6.3 of EPA Method 301 were followed to analyze the spiked and unspiked results. The application of these procedures to FTIR test data is described in Section 13 of EPA Method 320. This involved evaluating the measurement precision, determining any systematic bias in the results, and calculating a correction factor that can be applied to the results when the validated method is used.

5.4.2.1 Determination of Formaldehyde Standard

Formaldehyde vapor was produced by heating a permeation tube filled with solid paraformaldehyde. The tube was placed in a vapor generation oven (Kintek) equipped with a temperature controller and mass flow meter to regulate the carrier gas. The oven was raised to 100° or 110°C and the vapor of the formaldehyde monomer was purged with a continuous flow of a carrier gas. For spiking, the carrier gas was from the SF_6 cylinder standard (4.01 ppm in

nitrogen at ±2 percent, Scott Specialty Gases). When spiking was not performed, the formaldehyde vapor was continuously vented using a low flow of nitrogen as the carrier gas. With this device it was practical to generate a very stable concentration output of formaldehyde. The concentration of this formaldehyde standard was determined with respect to formaldehyde reference spectra in the EPA FTIR spectral library (Table 5-1).

TABLE 5-1. DETERMINATION OF FORMALDEHYDE STANDARD CONCENTRATION

Date	File name of direct measurement	Formaldehyde, ppm[a]	Uncertainty
9/23/97	FOR0923A	74.8	1.1
9/23/97	FOR0923B	81.7	1.2
	Average	78.3	

[a]Measured between 3160.8 and 2650.1 cm^{-1} using EPA reference spectrum 087b4anb, deresolved to 2.0 cm^{-1}. The vapor generation oven was kept at 100°C and the carrier gas flow rate was 1.00 L/min. Nitrogen was the carrier gas for the direct-to-cell measurements of formaldehyde.

5.4.2.2 Determination of Concentrations in Spike Mixtures

Frequently the output formaldehyde from the vapor generation oven was mixed quantitatively with the toluene standard so that sample stream could be spiked with toluene, SF_6 and formaldehyde simultaneously. Mixing the two spike streams together introduced another dilution factor that had to be accounted for. The concentration of each component in the spike mixtures was determined independently by preparing a separate analytical computer program. The input for the computer program consisted of reference spectra of each analyte in the mixtures. For SF_6 and toluene spectra the program used spectra of samples taken directly from the cylinder standards and measured in the FTIR cell. For formaldehyde the program used a spectrum from the EPA library. The program was used to analyze spectra of each of the spike mixtures, which were measured directly in the FTIR gas cell. Tables 5-2 and 5-3 present the results from this analysis and show the mass flow meter readings used to prepare the spike mixtures, the files names for the direct-to-cell measurements of each mixture, and the file names of the samples that were spiked with each mixture.

TABLE 5-2. CALCULATED CONCENTRATIONS IN MIXTURES USED FOR ANALYTE SPIKING AT THE SCRUBBER INLET

Spectra	Spike mixture concentrations, ppm			Spike flow, L/min		Kintek oven temp., °C	Mixture
	Formaldehyde	SF_6	Toluene	SF_6/ form flow[1]	Toluene flow		
INLSP102	59.2	3.97	124.5	1.0	1.00	100	mix0923 a
INLSP201	32.4	2.91	0.0	2.0	x	100	mix0924a
INLSP202	32.4	2.91	77.3	2.0	1.00	100	mix0924a
INLSP203	64.8	2.77	73.1	2.0	1.00	110	mix0925a
INLSP301	64.8	2.77	73.1	2.0	1.00	110	mix0925a
INLSP302	64.8	2.77	73.1	2.0	1.00	110	mix0925a
INLSP304	49.8	2.21	122.9	1.0	1.00	100	mix0925B

[1]Combined flow of formaldehyde vapor with SF_6 carrier gas.

TABLE 5-3. CALCULATED CONCENTRATIONS IN MIXTURES USED FOR ANALYTE SPIKING AT THE SCRUBBER OUTLET

Spectra	Spike mixture concentrations, ppm			Spike flow, L/min		Kintek oven temp., °C	Mixture
	Formaldehyde	SF_6	Toluene	SF_6/ form flow[1]	Toluene flow		
OUTSP104	32.4	2.91	77.3	2.0	1.00	100	mix0924 a
OUTSP105	32.4	2.91	77.3	2.0	1.00	100	mix0924 a
OUTSP201	32.4	2.91	0.0	2.0	1.00	100	mix0924a
OUTSP203	32.4	2.91	77.3	2.0	1.00	100	mix0924a
OUTSP205	64.8	2.77	73.1	2.0	1.00	110	mix0925a
OUTSP301	64.8	2.77	73.1	2.0	1.00	110	mix0925a
OUTSP305	49.8	2.21	122.9	1.0	1.00	100	mix0925B

[1]Combined flow of formaldehyde vapor with SF_6 carrier gas.

The measured concentrations in Tables 5-2 and 5-3 were used to determine the percent recoveries in Tables 4-2 to 4-5: the SF_6 concentrations were used to determine the dilution factor (DF) and the toluene and formaldehyde concentrations were combined with DF to determine the C_{exp} and the percent recoveries for those analytes.

5.4.2.3 Determination of Percent Recovery

The expected concentration of the spiked component was determined using the tracer gas, SF_6. In the following discussion the "direct" measurement refers to the measured concentration in the spike mixture before it was added to the sample stream (i.e., the concentrations presented in Tables 5-2 and 5-3).

The DF was determined by the ratio of the measured SF_6 concentration in the direct measurement of the spike mixture, $SF_{6(direct)}$, to the measured SF_6 concentration in the spiked samples, $SF_{6(spike)}$.

$$DF = \frac{SF_{6(direct)}}{SF_{6(spike)}} \tag{2}$$

The direct measurement of the analyte concentration in the spike mixture divided by DF gives the expected concentration for a 100 percent recovery of the analyte spike, C_{exp}.

$$C_{exp} = \frac{Analyte_{(direct)}}{DF} \tag{3}$$

where:

$Analyte_{(direct)}$ = The concentration of either toluene or formaldehyde from the direct measurement of the spiked mixture (from Tables 5-2 and 5-3).

The actual spike recovery in Tables 4-2 to 4-5 is the percent difference between the measured analyte concentrations in the spiked samples and Cexp.

$$\%\ Recovery = \frac{Calc}{Cexp} \times 100 \tag{4}$$

where "Calc" is equal to the difference between the measured analyte concentration in spiked samples minus the measured analyte concentration in the unspiked samples.

5.5 ANALYTICAL PROCEDURES

Analytical procedures in the EPA FTIR Protocol [2] were followed for this test. A computer program was prepared with reference spectra shown in Tables 5-4 and 5-5. The computer program used techniques based on a K-matrix analysis[4-6].

Initially, the spectra were reviewed to determined appropriate input for the computer program. Next an analysis was run on all of the sample spectra using a large data set of reference spectra. Finally, undetected compounds were removed from the analysis, and the spectra were analyzed again using a smaller reference spectra data set. The results from this second analytical run are summarized in Tables 1-1 and 1-2 and reported in Appendix B.

The same program used for the analysis also calculated the residual spectra (the difference between the observed and least squares fit absorbance values). Three residuals, one for each of the three analytical regions, were calculated for each sample spectrum. All of the residuals were stored electronically and are included with the electronic copy of the sample data provided with this report. Finally the computer program calculated the standard 1sigma uncertainty for each analytical result, but the reported uncertainties are equal to 4*sigma.

Calculated concentrations in sample spectra were corrected for differences in absorption path length and temperature between the reference and sample spectra by

$$C_{corr} = \left(\frac{L_r}{L_s}\right) \times \left(\frac{T_s}{T_r}\right) C_{calc} \qquad (5)$$

where:

C_{corr} = Concentration, corrected for path length and temperature.

C_{calc} = Calculated analyte concentration based on the best fit of the spectra without accounting for the path lengths and temperatures.

L_r = Reference spectrum path length.

L_s = Sample spectrum path length.

T_s = Absolute temperature of the sample gas, K.

T_r = Absolute gas temperature of reference spectrum sample, K.

The values of L_r, L_s, T_s, and T_r are included in the computer program input for each spectrum. The program output gives C_{corr} directly for each detected component of the mixture.

The scaling factors in Figure 4-3 were determined by using the output of the computer program, C_{corr}, and solving equation 5 for C_{calc}.

$$\text{Scaling factor} = \frac{C_{calc}}{\text{Ref ppm}} \tag{6}$$

Then where "Ref ppm" is the ppm concentration (ASC in Appendix A of the FTIR Protocol) associated with the reference spectrum to be scaled. The scaling factors were multiplied by the toluene and hexane reference spectra. The scaled reference spectra are plotted in Figure 4-3.

The sample path length was estimated by measuring the number of laser passes through the infrared gas cell. These measurements were recorded in the data records. The actual sample path length, L_s, was calculated by comparing the sample CTS spectra to CTS (reference) spectra in the EPA FTIR reference spectrum library. The reference CTS spectra were recorded at the same time as the toluene reference spectra and are included in the EPA library. The reference CTS spectra were used as input for a K-matrix analysis of the CTS spectra collected at the Saginaw field test.

5.5.1 Program Input

Tables 5-4 and 5-5 summarize the reference spectra input for the computer program used to analyze the sample spectra. Table 5-6 summarizes the program input used to analyze the CTS spectra recorded at the field test. The CTS spectra were analyzed as an independent determination of the cell path length. To analyze the CTS spectra, MRI used 0.25 cm^{-1} spectra "cts0814b" and "cts0814c." These reference CTS spectra were recorded on the same dates as the toluene reference spectra used in the analysis. These spectra were deresolved to 2.0 cm^{-1} in the same way as the toluene reference spectra using Section K.2.2 of the EPA FTIR protocol. The program analyzed the main two ethylene bands centered near 2,989 and 949 cm^{-1}. Table 5-7 summarizes the results of the CTS analysis. The cell path length from this analysis was used as L_s in equation 5.

TABLE 5-4. PROGRAM INPUT FOR ANALYSIS OF SAMPLE SPECTRA FROM POURING AND COOLING AND SHAKE-OUT HOUSING

Compound name	File name	Region No.	ISC[a]	Reference	
				Meters	T (K)
Water	194a2sub	1,2,3	100[a]		
Carbon monoxide	co20829a	1	167.1	22	394
Carbon dioxide	193b4a_g	1,2,3	415[a]	22	394
Formaldehyde	087b4anb	3	100.0	11.25	373
Methanol	104a4ase	2	20.0	3.0	298
Methane	1962bsft	3	80.1	22	394
Toluene	153a4arc	3	103.0	3	298
Ethylene	cts0923c	2	20.1	10.4	408
Hexane	0950709a	3	46.9	10.3	399
butane	but0715a	3	100.0	11.25	397.8
n-heptane	hep0716a	3	49.97	10.3	398.3
pentane	pen0715a	3	49.99	10.3	397.9
1-pentene	1pe0712a	3	50.1	10.3	399
2-methyl-1-pentene	2m1p716a	3	50.08	10.3	398.2
2-methyl-2butene	2m2b716a	3	50.04	10.3	398.2
2-methyl-2-pentene	2m2p713a	3	51.4	10.3	398.6
Isooctane	1650715a	3	50.3	10.3	398.3
3-methylpentane	3mp0713a	3	50.0	10.3	398.5

Region No.	Upper cm^{-1}	Lower cm^{-1}
1	2,142.0	2,035.6
2	1,275.0	789.3
3	3,160.8	2,650.1

[a]Indicates an arbitrary concentration was used for the interferant.

TABLE 5-5. PROGRAM INPUT FOR ANALYSIS OF SAMPLE SPECTRA FROM SCRUBBER INLET AND OUTLET

Compound name	File name	Region No.	ISC[a]	Reference	
				Meters	T (K)
Water	194h2sub	1,2,3	100[a]		
Carbon monoxide	co20829a	1	167.1	22	394
Carbon dioxide	193b4a_a	1,2,3	415[a]	22	394
Formaldehyde	087b4anb	3	100.0	11.25	373
HCl	097b4asd	3	72.2	2.25	373
Methane	196c1bsd	3	16.1	22	394
Toluene	153a4arc	3	103.0	3	298
Hexane	095a4asd	3	101.6	3	298
SF_6	Sf60923a	2	4.01	10.4	408

Region No.	Upper cm^{-1}	Lower cm^{-1}
1	2,142.0	2,035.6
2	1,275.0	789.3
3	3,160.8	2,650.1

[a]Indicates an arbitrary concentration was used for the interferant.

TABLE 5-6. PROGRAM INPUT FOR ANALYSIS OF CTS SPECTRA AND PATH LENGTH DETERMINATION

Compound name	File name	ASC	ISC	% Difference
Ethylene[a]	cts0814b.spc	1.007	1.014	0.7349
Ethylene	cts0814c.spc	1.007	0.999	0.7350

[a]This spectrum was used in the analysis of the GM Powertrain CTS spectra.

TABLE 5-7. RESULTS OF PATH LENGTH DETERMINATION

CTS spectra 100 ppm ethylene	Meters	Δ[a]	% Δ
CTS0921A	10.49	0.08	0.7%
CTS0921B	10.45	0.04	0.4%
CTS0923A	10.43	0.02	0.2%
CTS0923B	10.43	0.02	0.2%
CTS0923C	10.40	-0.01	-0.1%
CTS0924A	10.49	0.08	0.8%
CTS0924B	10.48	0.06	0.6%
CTS0925A	10.29	-0.12	-1.2%
CTS0925B	10.29	-0.12	-1.1%
CTS0925C	10.37	-0.04	-0.4%
Average path length (M)	10.41		
Standard deviation	0.074		

[a]The difference between the calculated and average values.

5.5.2 EPA Reference Spectra

The formaldehyde, hexane, methanol, HCl, and toluene spectra used in the MRI analysis were taken from the EPA reference spectrum library (http://www.epa.gov/ttn/emc/ftir.html). The original sample and background interferograms were truncated to the first 8,192 data points. The new interferograms were then Fourier transformed using Norton-Beer medium apodization and no zero filling. The transformation parameters agreed with those used to collect the sample spectra. The deresolved 2.0 cm^{-1} single beam spectra were combined with their deresolved single beam background spectra and converted to absorbance. This same procedure was used to prepare spectral standards for the HAP's and other compounds included in the preliminary analysis.

5.6 FTIR SYSTEM

The FTIR system used in this field test was a KVB/Analect Diamond-20 interferometer. The gas cell is a heated variable path (D-22H) gas cell from Infrared Analysis, Inc. The path length of 20 laser passes was used for measurement at both locations. The inside of the cell walls have been treated with a Teflon® coating to minimize potential analyte losses. A

mercury/cadmium/ telluride (MCT) liquid nitrogen detector was used. Spectra were collected at 2.0 cm^{-1}, the highest resolution of the Diamond-20 system.

The optical path length was measured by shining a He/Ne laser into the cell and adjusting the mirror tilt until the desired number of passes was obtained. The number of passes was recorded on the field data sheets in Appendix B-1. The path length in meters was determined by comparing calibration transfer standard (CTS, ethylene in nitrogen) spectra measured in the field to CTS spectra in the EPA reference spectrum library.

6.0 SUMMARY OF QA/QC PROCEDURES

6.1 SAMPLING AND TEST CONDITIONS

Before the test, sample lines were checked for leaks and cleaned by purging with moist air (250°F). Following this, the lines were checked for contamination using dry nitrogen. This is done by heating the sampling lines to 250°F and purging with dry nitrogen. The FTIR cell was filled with some of the purging nitrogen and the spectrum of this sample was collected. This single beam spectrum was converted to absorbance using a spectral background of pure nitrogen (99.9 percent) taken directly from a cylinder. The lines were checked again on site before sampling, after each change of location, and after spiking.

During sampling at the scrubber inlet and outlet an effort was made to measure at least five different samples from each location.

Each spectrum was assigned a unique file name and written to the hard disk and a backup disk under that file name. Each interferogram was also saved under a file name that identifies it with its corresponding absorbance spectrum. All background spectra and calibration spectra were also stored on disks with their corresponding interferograms.

Notes on each calibration and sample spectrum were recorded on hard copy data sheets. Below are listed some sampling and instrument parameters that were documented in these records.

Sampling Conditions

- Line temperature
- Process conditions
- Sample flow rate
- Ambient pressure
- Time of sample collection

Instrument Configuration

- Cell volume (for continuous measurements)
- Cell temperature
- Cell path length
- Instrument resolution
- Number of scans co-added

- Length of time to measure spectrum
- Time spectrum was collected
- Time and conditions of recorded background spectrum
- Time and conditions of relevant CTS spectra
- Apodization

Hard copy records were also kept at the mold cooling and shake-out housing line of all flue gas measurements, such as sample flow, temperature, moisture and diluent data. Flow data at the cupola scrubber inlet and outlet were obtained by PES.

Effluent was allowed to flow through the entire sampling system for at least 5 min before a sampling run started or after changing to a different test location. FTIR spectra were continuously monitored to ensure that there was no deviation in the spectral baseline greater than ±5 percent ($-0.02 \leq$ absorbance $\leq +0.02$). When this occurred, sampling was interrupted and a new background spectrum was collected. The run was then resumed until completed or until it was necessary to collect another background spectrum.

6.2 FTIR SPECTRA

For a detailed description of QA/QC procedures relating to data collection and analysis, refer to the "Protocol For Applying FTIR Spectrometry in Emission Testing".[2]

A spectrum of the CTS was recorded at the beginning and end of each test day. A leak check of the FTIR cell was also performed according to the procedures in references 1 and 2. The CTS gas was 20.1 ppm ethylene in nitrogen. The CTS spectrum provided a check on the operating conditions of the FTIR instrumentation, e.g. spectral resolution and cell path length. Ambient pressure was recorded whenever a CTS spectrum was collected. The CTS spectra were compared to CTS spectra in the EPA library. This comparison is used to quantify differences between the library spectra and the field spectra so library spectra of HAP's can be used in the quantitative analysis.

Two copies of all interferograms, processed backgrounds, sample spectra, and the CTS were stored on separate computer disks. Additional copies of sample and CTS absorbance spectra were also be stored for data analysis. Sample absorbance spectra can be regenerated from the raw interferograms, if necessary. A copy of the data was provided with the draft report.

To measure HAP's detected in the gas stream, MRI used spectra from the EPA library, when available.

7.0 REFERENCES

1. Test Method 320 (Draft) "Measurement of Vapor Phase Organic and Inorganic Emissions by Extractive Fourier Transform Infrared (FTIR) Spectroscopy," *40 CFR Part 63, Appendix A.*

2. "Protocol for the Use of FTIR Spectrometry to Perform Extractive Emissions Testing at Industrial Sources," Revised, EPA Contract No. 68-D2-0165, Work Assignment 3-12, September, 1996.

3. "Method 301 - Field Validation of Pollutant Measurement Methods from Various Waste Media," *40 CFR Part 63, Appendix A.*

4. "Computer-Assisted Quantitative Infrared Spectroscopy," Gregory L. McClure (ed.), *ASTM Special Publication 934* (ASTM), 1987.

5. "Multivariate Least-Squares Methods Applied to the Quantitative Spectral Analysis of Multicomponent Mixtures," *Applied Spectroscopy*, 39(10), 73-84, 1985.

6. "An Examination of a Least Squares Fit FTIR Spectral Analysis Method," G. M. Plummer and W. K. Reagen, Air and Waste Management Association, Paper Number 96-WA65.03, 1996.

APPENDIX A

FIELD DATA

A-1 VOLUMETRIC FLOW

CUPOLA SCRUBBER

The flue gas data and flow calculation results from the cupola scrubber inlet and outlet were provided to MRI by Pacific Environmental Services (PES). In the draft report the inlet flow results were incorrect. The corrected inlet flow results were provided by PES for the revised test report. The corrected inlet flow results are also present in summary Table 3-2 and the corrected inlet flows have been incorporated into the mass emission results.

PARTICULATE/METALS EMISSIONS SAMPLING AND FLUE GAS PARAMETERS
CUPOLA INLET
GM POWERTRAIN - SAGINAW, MICHIGAN

Run No.	**I-M29-1**	**I-M29-2**	**I-M29-3**	**I-M29-4**	**Average**
Date	9/23/97	9/24/97	9/25/97	9/25/97	
Total Sampling Time, min	115	237.3	120	120	
Average Sampling Rate, dscfm [a]	0.517	0.515	0.897	0.858	0.643
Sample Volume:					
dscf [b]	59.458	122.140	107.586	103.008	96.394
dscm [c]	1.684	3.459	3.046	2.917	2.730
Average Flue Gas Temp., °F	125	128	133	137	129
O_2 Concentration, % by Volume	12.3	12.7	12.2	11.9	12.4
CO_2 Concentration, % by Volume	8.9	9.4	10.0	11.0	9.4
Moisture, % by Volume	20.0	30.0	28.6	30.3	26.2
Flue Gas Volumetric Flow Rate:					
acfm [d]	81,999	81,108	82,857	83,329	57,280
dscfm [a]	60,183	58,682	56,090	54,702	40,743
dscmm [e]	1,704	1,662	1,588	1,549	1,154
Isokinetic Sampling Ratio, %	102.3	104.5	103.8	105.1	103.5

[a] Dry standard cubic feet per minute at 68° F (20° C) and 1 atm.

[b] Dry standard cubic feet at 68° F (20° C) and 1 atm.

[c] Dry standard cubic meters at 68° F (20° C) and 1 atm.

[d] Actual cubic feet per minute at exhaust gas conditions.

[e] Dry standard cubic meters per minute at 68° F (20° C) and 1 atm.

SVOHAPs EMISSIONS SAMPLING AND FLUE GAS PARAMETERS

CUPOLA OUTLET

GM POWERTRAIN - SAGINAW, MICHIGAN

Run No.	**BO-0010-1**	**BO-0010-2**	**BO-0010-3**	**BO-0010-4**	**Average**
Date	9/23/97	9/24/97	9/25/97	9/25/97	
Total Sampling Time, min	110	240	240	240	
Average Sampling Rate, dscfm [a]	0.640	0.636	0.882	0.895	0.763
Sample Volume:					
dscf [b]	70.444	152.632	211.667	214.771	162.378
dscm [c]	1.995	4.322	5.994	6.082	4.598
Average Flue Gas Temp., °F	125	135	111	111	121
O_2 Concentration, % by Volume	16.7	11.8	12.5	12.4	13.4
CO_2 Concentration, % by Volume	4.0	10.6	9.7	10.3	8.7
Moisture, % by Volume	12.7	16.6	9.3	9.2	11.9
Flue Gas Volumetric Flow Rate:					
acfm [d]	74,589	76,444	64,403	65,580	70,254
dscfm [a]	58,567	56,562	52,693	53,676	55,375
dscmm [e]	1,658	1,602	1,492	1,520	1,568
Isokinetic Sampling Ratio, %	98.4	101.2	101.2	100.8	100.4

PARTICULATE/METALS EMISSIONS SAMPLING AND EXHAUST GAS PARAMETERS

CUPOLA BAGHOUSE OUTLET

GM POWERTRAIN - SAGINAW, MICHIGAN

Run No.	O-M29-1	O-M29-2	O-M29-3	O-M29-4	Average
Date	9/23/97	9/24/97	9/25/97	9/25/97	
Total Sampling Time, min	110	240	120	120	
Average Sampling Rate, dscfm [a]	0.692	0.633	0.946	0.939	0.757
Sample Volume:					
dscf [b]	76.163	151.911	113.491	112.649	113.855
dscm [c]	2.157	4.302	3.214	3.190	3.224
Average Exhaust Gas Temp., °F	125	133	109	109	122.3
O_2 Concentration, % by Volume	16.7	11.80	12.5	12.4	13.67
CO_2 Concentration, % by Volume	4.00	10.60	9.70	10.30	8.10
Moisture, % by Volume	13.0	16.4	9.2	9.6	12.9
Exhaust Gas Volumetric Flow Rate:					
acfm [d]	80,243	74,042	68,668	69,760	74,318
dscfm [a]	62,768	55,151	56,641	57,542	58,187
dscmm [e]	1,777	1,562	1,604	1,629	1,648
Isokinetic Sampling Ratio, %	95.4	99.3	97.8	95.5	97.5

PCDDs/PCDFs EMISSIONS SAMPLING AND FLUE GAS PARAMETERS

CUPOLA OUTLET

GM POWERTRAIN - SAGINAW MICHIGAN

Run No.	BO-23-1	BO-23-2	BO-23-3	BO-23-4	Average
Date	9/23/97	9/24/97	9/25/97	9/25/97	
Total Sampling Time, min	110	240	240	240	
Average Sampling Rate, dscfm [a]	0.499	0.629	0.904	0.925	0.739
Sample Volume:					
dscf [b]	54.895	151.041	217.061	221.977	161.244
dscm [c]	1.554	4.277	6.146	6.286	4.566
Average Flue Gas Temp., °F	125	133	110	108	119
O_2 Concentration, % by Volume	16.7	11.8	12.5	12.4	13.4
CO_2 Concentration, % by Volume	4.0	10.6	9.7	10.3	8.7
Moisture, % by Volume	12.2	16.2	8.7	8.5	11.409
Flue Gas Volumetric Flow Rate:					
acfm [d]	98,273	110,810	97,171	100,082	101,584
dscfm [a]	77,577	82,637	80,094	83,025	80,833
dscmm [e]	2,197	2,340	2,268	2,351	2,289
Isokinetic Sampling Ratio, %	93.0	102	103.4	102.0	99.993

A-1 VOLUMETRIC FLOW

Shakeout Housing

A-2 GAS BAG COLLECTION DATA

Location: GMPOWER TRAIN
SAGINAW, MI

OPERATOR: Smit

SHAKEOUT BAG SAMPLE

C:\GMPOWER\BAGS\ASF\

Date	Time of analysis	Filename	Bag #	Location
9/23/97	12:33	* SHK3_101	Bag #2	Shakeout - Stack #3
		* Run at Low Pressure, do to valve error		
9/23/97	15:52	SHK4_101	Bag #3	Shakeout - Stack #4
"	15:56	SHK4_102	Bag #3	"
				(Bag #4 not used)
9/24/97	13:20	SHK3_201	Bag #5	Shakeout - Stack #
"	13:23	SHK3_202	"	"
"	13:27	SHK5_101	Bag #6	Shakeout - Stack #

Field Sample Data Sheet - Tedlar Bag Collection Method
GM/SMOC
MRI Project No. 3804.25
Sampling Location: Shakeout #3
Date: 9/23/97
Sampling personnel: Raile/Neal

	Sample No. ~~Teflon~~ Bag #2	Sample No. _____
Pump ID Number	Teflon	
Source Temperature (deg. C)		
Barometric Pressure (mm Hg)		
Ambient Temperature (deg. C)		
Sample Flow Rate (L/min)	0.5	
Sample Volume (L)		
Sample Number	Sample Bag #2	
Start Time	10:31:45	
Finish Time	12:00:37	

Leak Check @ Start Pass @ 21" Hg @ 10:31 am
Leak Check @ Stop Pass @ 22" Hg @ 12:03 pm

Sample No. Bag #2

Time	Flowmeter Reading
10:33 AM	500 ml/min
12:00 pm	500 ml/min

Sample No. _____

Time	Flowmeter Reading

Field Sample Data Sheet - Tedlar Bag Collection Method
GM/SMOC
MRI Project No. 3804.25
Sampling Location: SMALLEOUT #4
Date: 9-23-97
Sampling personnel: N/SMC

	Sample No. ~~4~~ 3 DN	Sample No. _____
Pump ID Number	55	
Source Temperature (deg. C)		
Barometric Pressure (mm Hg)		
Ambient Temperature (deg. C)		
Sample Flow Rate (L/min)	0.5	
Sample Volume (L)		
Sample Number	~~4~~ 3 DN	
Start Time	14:13:00	
Finish Time	15:13:00	

LEAK CHECK START 24 in Hg @ 14:06 @ PASS
LEAK CHECK END 24 IN Hg @ 15:15 @ PASS

Sample No. 3

Time	Flowmeter Reading
14:13:00	500 ml/min

Sample No. _____

Time	Flowmeter Reading

Field Sample Data Sheet - Tedlar Bag Collection Method
GM/SMOC
MRI Project No. 3804.25
Sampling Location: Shakeout #3+5
Date: 9/24/97
Sampling personnel: Rolle/Neal/Myers

	Sample No. Bag #5 Shakeout #3	Sample No. Bag #6 Shakeout #5
Pump ID Number	S.S.	Teflon
Source Temperature (deg. C)		
Barometric Pressure (mm Hg)		
Ambient Temperature (deg. C)		
Sample Flow Rate (L/min)	0.5	0.5
Sample Volume (L)		
Sample Number		
Start Time		
Finish Time		

Start Leak Check Pass @ 1012 10:48
Stop Leak Check Pass @ 1155

Start Leak Check Pass @ 852
Stop Leak Check Pass @ 1155

Sample No. Bag #5

	Time	Flowmeter Reading
	1050	500 ml/min
Shutdown	1053	
Startup	1058	500 ml/min
Shutdown	1104	
Startup	1105	500 ml/min
	1110	500 ml/min
	1115	500 ml/min
	1120	500 ml/min
	1125	500 ml/min
	1130	500 ml/min
	1135	500 ml/min
	1140	500 ml/min
	1145	500 ml/min
	1150	500 ml/min
	1154	500 ml/min

Sample No. Bag #6

	Time	Flowmeter Reading
	1050	500 ml/min
Shutdown	1055	
	1058	500 ml/min
Shutdown	1104	
Startup	1105	500 ml/min
	1110	500 ml/min
	~~1115~~ KCN 1115	500 ml/min
	1120	500 ml/min
	1125	500 ml/min
	1130	500 ml/min
	1135	500 ml/min
	1140	500 ml/min
	1145	500 ml/min
	1150	500 ml/min
	1154	500 ml/min

- GM POWERTRAIN SAGINAW, MI - OPERATOR: JMH

Pouring Bag Sample

Directory C:\GMPOWER\BAGS\ASF\

Date	Time of Analysis	Filename	BAG #	Location
9/23/97	12:04	POUR101	1	Pouring Stack
"	12:21	POUR102	1	"

Field Sample Data Sheet - Tedlar Bag Collection Method
GM/SMOC
MRI Project No. 3804.25
Sampling Location: Pouring
Date: 9/23/97
Sampling personnel: Pole/Neal

	Sample No. 1 Sample Bag #1	Sample No. _____
Pump ID Number	SS	
Source Temperature (deg. C)		
Barometric Pressure (mm Hg)		
Ambient Temperature (deg. C)		
Sample Flow Rate (L/min)	0.5	
Sample Volume (L)		
Sample Number	1	
Start Time	10:07:00	
Finish Time	12:00:00	

Leak Check @ Start Pass @ 23 in Hg @ 10:00
Leak Check @ Stop Pass @ 22 in Hg @ 11:34

Sample No. Bag #1

Time	Flowmeter Reading
10:03	500 ml/min
10:42	500 ml/min (from 200 ml/min)
11:05	500 ml/min (from 200 ml/min
11:25	500 ml/min (from 400 ml/min)
11:30	500 ml/min

Sample No. _____

Time	Flowmeter Reading

GM Power Train Saginaw, MI Operator: JMH

COOLING LINE - BAG SAMPLES

Date	Analysis Time	filename	Bag #	Location
9/24/97	15:30	COOLS101	#7	Cooling Stack "S"
"	15:35	COOLS102	#7	Cooling Stack "S"
9/25/97	11:07	COOLR101	#9	Cooling Stack "R"
"	11:11	COOLR102	#9	Cooling Stack "R"
9/25/97	14:07	COOLM101	#10	Cooling Stack - Main
"	14:11	COOLM102	#10	Cooling Stack - Main

— FTIR Cell (evacuated) purged and refilled between each collection

9/25/97		BACK101	# 8	Background Air
9/25/97		BACK102	# 8	Sampled near Cooling St

Field Sample Data Sheet - Tedlar Bag Collection Method
GM/SMOC
MRI Project No. 3804.25
Sampling Location: Cooling Port 5
Date: 9/24/97
Sampling personnel: Raile/Neal/Myers

	Sample No. Bag #7	Sample No. _____
Pump ID Number	5.5	
Source Temperature (deg. C)		
Barometric Pressure (mm Hg)		
Ambient Temperature (deg. C)		
Sample Flow Rate (L/min)	0.5	
Sample Volume (L)	≈ 30 L	
Sample Number	Bag #7 Port 5	
Start Time	14:07:30 pm	
Finish Time	15:07:30	

Leak Check @ Start PASS @ 1506
Leak check @ Stop PASS @ 1509

Sample No. Bag #7 "5"

Time	Flowmeter Reading
Start 1407:30	500 ml/min
1412	500 ml/min
1417	500 ml/min
1422	500 ml/min
1427	500 ml/min
1432	500 ml/min
1437	500 ml/min
1442	500 ml/min
1447	500 ml/min
1452	500 ml/min
1457	500 ml/min
1502	500 ml/min
1507	500 ml/min

Sample No. _____

Time	Flowmeter Reading

103 FX to Shakeout Roof

Field Sample Data Sheet - Tedlar Bag Collection Method
GM/SMOC
MRI Project No. 3804.25
Sampling Location: Ambient - Inside Foundary near Main Cooling Stack - 1st Level
Date: 9-15-97
Sampling personnel: Neal/Raile/Myers

	Sample No. #8	Sample No. _____
Pump ID Number	S.S.	
Source Temperature (deg. C)		
Barometric Pressure (mm Hg)		
Ambient Temperature (deg. C)		
Sample Flow Rate (L/min)	1. min	
Sample Volume (L)		
Sample Number	Ambient BAG #8	
Start Time	1126	
Finish Time	1156	

Start Leaktest Pass @ 1122
Stop Leak Check Pass @ 1158

Sample No. BAG # 8

	Time	Flowmeter Reading
Start	1126	1 L/min
	1131	1 L/min
	1136	1. L/min
	1141	1. L/min
	1146	1. L/min
	1151	1. L/min
Stop	1156	1. L/min

Sample No. _____

Time	Flowmeter Reading

Ken Myers

Field Sample Data Sheet - Tedlar Bag Collection Method
GM/SMOC
MRI Project No. 3804.25
Sampling Location: Rule/Neal/Myers
Date: 9/25/97
Sampling personnel: Cooling Port "R", Cooling "Main"

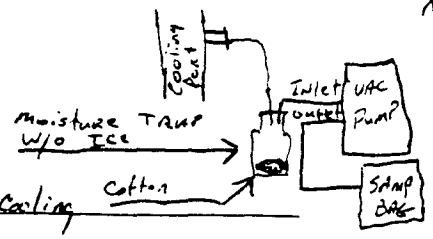

	Sample No. Bag #9	Sample No. BAG #10
Pump ID Number	S.S.	S.S.
Source Temperature (deg. C)		
Barometric Pressure (mm Hg)		
Ambient Temperature (deg. C)		
Sample Flow Rate (L/min)	0.5	0.5
Sample Volume (L)		
Sample Number	Cool Port "R"	main Cooling
Start Time	0903:00	1021:00
Finish Time	1003:00	1121:00

Leak Check @ Start Pass @ 785
Leak Check @ Stop Pass @ 1005

Leak Check @ Start PASS @ 105
Leak Check @ Stop PASS @ 1122

Sample No. Bag #9 "R"

	Time	Flowmeter Reading
Startup	0903	500 ml/min
	0908	500 ml/min
	0913	500 ml/min
	0918	500 ml/min
	0923	500 ml/min
	0928	500 ml/min
	0933	500 ml/min
	0938	500 ml/min
	0943	500 ml/min
	0948	500 ml/min
	0953	500 ml/min
	0958	500 ml/min
Shutdown	1003	500 ml/min

Sample No. BAG #10 "MAIN"

	Time	Flowmeter Reading
Startup	1021	500 ml/min
	1026	500 ml/min
	1031	500 ml/min
	1036	500 ml/min
	1041	500 ml/min
	1046	500 ml/min
	1051	500 ml/min
	1056	500 ml/min
	1101	500 ml/min
	1106	500 ml/min
	1111	500 ml/min
	1116	500 ml/min
Shutdown	1121	500 ml/min

APPENDIX B

FTIR DATA

B-1 CUPOLA FTIR RESULTS TABLES

TABLE B-1. FTIR RESULTS FROM THE SCRUBBER INLET

			Hydrogen chloride		Toluene		Hexane		Methane		Carbon monoxide		Formaldehyde	
Date	Time	File name	ppm	Uncertainty	ppm	Uncertainty	ppm	Uncertainty	ppm	Uncertainty	ppm	Uncertainty	ppm	Uncertainty
9/23/97	10:59	**INLSP101**	**0.00**	**1.7**	**25.3**	**1.1**	**0.0**	**0.2**	**6.2**	**0.6**	**0.0**	**12.9**	**14.9**	**0.7**
9/23/97	12:2	**INLSP102**	**0.00**	**21.0**	**34.8**	**14.1**	**0.0**	**1.9**	**30.2**	**7.4**	**0.0**	**116.7**	**0.00**	**8.9**
9/23/97	12:11	INLN2103	0.84	0.4	0.00	0.3	0.4	0.0	0.8	0.1	22.5	5.2	2.8	0.17
9/23/97	13:17	INLUN104	0.00	16.9	0.00	11.6	0.0	1.6	25.3	5.9	0.0	85.8	0.00	7.2
9/23/97	13:23	INLUN105	0.00	17.4	0.00	12.0	0.0	1.6	25.9	6.1	0.0	88.7	0.00	7.4
9/23/97	13:53	INLUN106	0.00	18.0	0.00	12.4	0.0	1.7	26.8	6.3	0.0	87.2	0.00	7.6
9/23/97	14:32	INLUN107	0.00	11.4	0.00	7.8	0.0	1.1	19.4	4.0	0.0	57.0	0.00	4.8
9/23/97	15:7	INLUN108	0.00	18.3	0.00	12.6	0.0	1.7	26.7	6.4	0.0	94.9	0.00	7.7
9/23/97	15:44	19230014	0.00	12.0	0.00	8.3	0.0	1.1	20.4	4.2	0.0	61.3	0.00	5.1
9/23/97	15:46	19230015	0.00	11.9	0.00	8.2	0.0	1.1	20.0	4.2	0.0	62.4	0.00	5.0
9/23/97	15:49	19230016	0.00	11.7	0.00	8.0	0.0	1.1	19.8	4.1	0.0	62.4	0.00	5.0
9/23/97	15:51	19230017	0.00	11.5	0.00	7.9	0.0	1.1	19.7	4.0	0.0	62.7	0.00	4.9
9/23/97	15:53	19230018	0.00	11.4	0.00	7.8	0.0	1.1	20.0	4.0	0.0	63.5	0.00	4.8
9/23/97	15:55	19230019	0.00	11.1	0.00	7.7	0.0	1.0	19.8	3.9	0.0	62.4	0.00	4.7
9/23/97	15:57	19230020	0.00	10.9	0.00	7.5	0.0	1.0	19.4	3.8	0.0	62.1	0.00	4.6
9/23/97	15:59	19230021	0.00	10.8	0.00	7.5	0.0	1.0	18.8	3.8	0.0	62.9	0.00	4.6
9/23/97	16:25	19230033	0.00	10.3	0.00	7.1	0.0	1.0	19.1	3.6	111.5	62.0	0.00	4.4
9/23/97	16:27	19230034	0.00	10.4	0.00	7.1	0.0	1.0	18.8	3.6	113.6	62.3	0.00	4.4
9/23/97	16:29	19230035	0.00	10.2	0.00	7.0	0.0	0.9	18.4	3.6	118.7	61.8	0.00	4.3
9/23/97	16:32	19230036	0.00	10.2	0.00	7.0	0.0	0.9	18.3	3.6	122.8	62.2	0.00	4.3
9/23/97	16:36	19230037	0.00	10.3	0.00	7.1	0.0	1.0	18.0	3.6	129.2	63.3	0.00	4.4
9/23/97	16:38	19230038	0.00	10.4	0.00	7.1	0.0	1.0	18.6	3.6	131.3	63.8	0.00	4.4
9/23/97	16:40	19230039	0.00	10.4	0.00	7.2	0.0	1.0	19.6	3.7	134.2	64.3	0.00	4.4
9/23/97	17:8	19230052	0.00	10.2	0.00	7.0	0.0	0.9	19.7	3.6	144.6	64.9	0.00	4.3
9/23/97	17:10	19230053	0.00	10.3	0.00	7.1	0.0	1.0	19.7	3.6	146.2	65.4	0.00	4.3
9/23/97	17:12	19230054	0.00	10.3	0.00	7.1	0.0	1.0	19.8	3.6	150.2	65.7	0.00	4.3

Bold text indicates that this is spiked data not used in average.

TABLE B-1. (continued)

Date	Time	File name	Hydrogen chloride		Toluene		Hexane		Methane		Carbon monoxide		Formaldehyde	
			ppm	Uncertainty	ppm	Uncertainty	ppm	Uncertainty	ppm	Uncertainty	ppm	Uncertainty	ppm	Uncertainty
9/23/97	17:15	19230055	**0.00**	10.2	0.00	7.0	0.0	0.9	19.8	3.6	148.6	65.3	0.00	4.3
9/23/97	17:17	19230056	**0.00**	11.1	0.00	7.6	2.2	1.0	78.7	3.9	312.2	81.3	0.00	4.7
9/23/97	17:19	19230057	**0.00**	62.0	0.00	41.5	0.0	5.8	848.6	21.8	737.6	134.8	0.00	26.3
9/23/97	17:21	19230058	**0.00**	15.3	0.00	10.6	0.0	1.4	138.9	5.4	300.9	99.8	0.00	6.5
9/23/97	17:23	19230059	**0.00**	15.0	0.00	10.3	0.0	1.4	43.3	5.3	0.00	87.1	0.00	6.3
9/23/97	17:25	19230060	**0.00**	16.2	0.00	11.1	0.0	1.5	26.8	5.7	0.00	86.1	0.00	6.8
9/23/97	18:36	INAIR109	0.00	1.5	0.00	1.0	0.0	0.1	6.3	0.54	0.00	10.5	0.00	0.6
Average --->			0.03	13.1	0.00	9.0	0.1	1.2	52.7	4.6	91.1	68.4	0.09	5.6

Bold text indicates that this is spiked data not used in average.

TABLE B-1. (continued)

Date	Time	File name	Hydrogen chloride		Toluene		Hexane		Methane		Carbon monoxide		Formaldehyde	
			ppm	Uncertainty	ppm	Uncertainty	ppm	Uncertainty	ppm	Uncertainty	ppm	Uncertainty	ppm	Uncertainty
9/24/97	8:47	**INLSP201**	**0.00**	17.4	**0.00**	12.0	**0.0**	1.6	22.2	6.1	**0.00**	87.1	**0.00**	7.4
9/24/97	9:32	**INLSP202**	**0.00**	8.4	32.5	5.6	**0.0**	0.8	13.5	3.0	**0.00**	49.9	9.8	3.5
9/24/97	9:58	19240001	0.00	18.8	0.00	12.9	0.0	1.7	25.6	6.6	0.00	94.7	0.00	8.0
9/24/97	10:0	19240002	0.00	19.5	0.00	13.4	0.0	1.8	26.1	6.8	0.00	98.6	0.00	8.2
9/24/97	10:2	19240003	0.00	19.4	0.00	13.3	0.0	1.8	25.9	6.8	0.00	98.1	0.00	8.2
9/24/97	10:4	19240004	0.00	19.1	0.00	13.2	0.0	1.8	25.4	6.7	0.00	96.8	0.00	8.1
9/24/97	10:6	19240005	0.00	19.1	0.00	13.1	0.0	1.8	25.4	6.7	0.00	96.2	0.00	8.1
9/24/97	10:9	19240006	0.00	18.9	0.00	13.0	0.0	1.8	25.2	6.7	0.00	95.6	0.00	8.0
9/24/97	10:11	19240007	0.00	18.8	0.00	13.0	0.0	1.7	24.9	6.6	0.00	95.5	0.00	8.0
9/24/97	10:45	19240022	0.00	20.0	0.00	13.8	0.0	1.9	26.3	7.0	0.00	100.6	0.00	8.5
9/24/97	10:47	19240023	0.00	19.9	0.00	13.7	0.0	1.9	26.5	7.0	0.00	100.1	0.00	8.4
9/24/97	10:49	19240024	0.00	19.6	0.00	13.5	0.0	1.8	25.9	6.9	0.00	98.9	0.00	8.3
9/24/97	10:52	19240025	0.00	19.4	0.00	13.4	0.0	1.8	25.6	6.8	0.00	97.7	0.00	8.2
9/24/97	10:54	19240026	0.00	19.4	0.00	13.4	0.0	1.8	25.6	6.8	0.00	97.5	0.00	8.2
9/24/97	10:56	19240027	0.00	19.6	0.00	13.5	0.0	1.8	25.8	6.9	0.00	98.3	0.00	8.3
9/24/97	10:58	19240028	0.00	19.8	0.00	13.7	0.0	1.8	26.1	7.0	0.00	99.8	0.00	8.4
9/24/97	11:51	19240051	0.00	22.3	0.00	15.4	0.0	2.1	29.4	7.9	0.00	112.6	0.00	9.5
9/24/97	11:54	19240052	0.00	22.6	0.00	15.5	0.0	2.1	29.8	7.9	0.00	113.1	0.00	9.6
9/24/97	11:56	19240053	0.00	22.3	0.00	15.4	0.0	2.1	29.8	7.8	0.00	111.7	0.00	9.5
9/24/97	11:58	19240054	0.00	22.0	0.00	15.2	0.0	2.0	29.4	7.7	0.00	110.6	0.00	9.3
9/24/97	12:0	19240055	0.00	21.9	0.00	15.1	0.0	2.0	29.2	7.7	0.00	110.1	0.00	9.3
9/24/97	12:2	19240056	0.00	21.9	0.00	15.1	0.0	2.0	29.3	7.7	0.00	109.8	0.00	9.3
9/24/97	12:4	19240057	0.00	21.8	0.00	15.0	0.0	2.0	29.2	7.7	0.00	109.0	0.00	9.2
9/24/97	12:6	19240058	0.00	21.7	0.00	14.9	0.0	2.0	29.0	7.6	0.00	108.9	0.00	9.2
9/24/97	12:9	19240059	0.00	21.4	0.00	14.7	0.0	2.0	28.6	7.5	0.00	107.8	0.00	9.1

Bold text indicates that this is spiked data not used in average.

TABLE B-1. (continued)

Date	Time	File name	Hydrogen chloride		Toluene		Hexane		Methane		Carbon monoxide		Formaldehyde	
			ppm	Uncertainty	ppm	Uncertainty	ppm	Uncertainty	ppm	Uncertainty	ppm	Uncertainty	ppm	Uncertainty
9/24/97	12:41	19240074	**0.00**	10.8	0.00	7.4	0.0	1.0	16.6	3.8	0.00	51.0	0.00	4.6
9/24/97	12:43	19240075	**0.00**	20.8	0.00	14.4	0.0	1.9	28.0	7.3	0.00	104.9	0.00	8.8
9/24/97	12:45	19240076	**0.00**	20.8	0.00	14.3	0.0	1.9	28.0	7.3	0.00	104.5	0.00	8.8
9/24/97	12:47	19240077	**0.00**	20.7	0.00	14.3	0.0	1.9	27.9	7.3	0.00	104.5	0.00	8.8
9/24/97	12:49	19240078	**0.00**	21.1	0.00	14.5	0.0	2.0	28.2	7.4	0.00	106.3	0.00	8.9
9/24/97	12:51	19240079	**0.00**	21.5	0.00	14.8	0.0	2.0	28.7	7.6	0.00	107.5	0.00	9.1
9/24/97	12:54	19240080	0.00	21.9	0.00	15.1	0.0	2.0	29.2	7.7	0.00	109.4	0.00	9.3
9/24/97	12:56	19240081	0.00	22.2	0.00	15.3	0.0	2.1	29.4	7.8	0.00	110.9	0.00	9.4
9/24/97	12:58	19240082	0.00	22.6	0.00	15.6	0.0	2.1	29.8	8.0	0.00	112.9	0.00	9.6
9/24/97	13:0	19240083	0.00	22.9	0.00	15.8	0.0	2.1	30.2	8.1	0.00	113.8	0.00	9.7
9/24/97	13:2	19240084	0.00	22.6	0.00	15.6	0.0	2.1	30.1	8.0	0.00	112.5	0.00	9.6
9/24/97	13:54	19240110	0.00	21.5	0.00	14.8	0.0	2.0	28.3	7.6	0.00	107.6	0.00	9.1
9/24/97	13:56	19240111	0.00	22.0	0.00	15.1	0.0	2.0	28.8	7.7	0.00	110.0	0.00	9.3
9/24/97	13:58	19240112	0.00	22.0	0.00	15.1	0.0	2.0	29.1	7.7	0.00	109.6	0.00	9.3
9/24/97	14:0	19240113	0.00	21.8	0.00	15.0	0.0	2.0	28.9	7.7	0.00	108.8	0.00	9.2
9/24/97	14:2	19240114	0.00	21.7	0.00	15.0	0.0	2.0	28.7	7.6	0.00	108.5	0.00	9.2
9/24/97	14:5	19240115	0.00	22.0	0.00	15.1	0.0	2.0	28.7	7.7	0.00	109.9	0.00	9.3
9/24/97	14:7	19240116	0.00	22.2	0.00	15.3	0.0	2.1	29.0	7.8	0.00	110.4	0.00	9.4
9/24/97	14:9	19240117	0.00	21.8	0.00	15.0	0.0	2.0	28.6	7.7	0.00	108.4	0.00	9.2
9/24/97	14:23	**INLSP203**	**0.00**	**14.5**	**28.9**	**9.7**	**0.0**	**1.3**	**18.8**	**5.1**	**0.00**	**73.4**	**17.7**	**6.1**
9/24/97	14:58	INLN2204	1.2	0.6	0.00	0.42	0.0	0.1	0.5	0.2	0.00	5.0	0.00	0.3
Average --->			0.03	20.3	0.00	14.0	0.0	1.9	27.0	7.1	0.00	101.8	0.00	8.6

Bold text indicates that this is spiked data not used in average.

TABLE B-1. (continued)

Date	Time	File name	Hydrogen chloride		Toluene		Hexane		Methane		Carbon monoxide		Formaldehyde	
			ppm	Uncertainty	ppm	Uncertainty	ppm	Uncertainty	ppm	Uncertainty	ppm	Uncertainty	ppm	Uncertainty
9/25/97	8:15	**INLSP301**	**0.00**	**13.5**	**29.4**	**9.1**	**0.0**	**1.3**	**15.3**	**4.8**	**0.00**	**68.8**	**22.0**	**5.7**
9/25/97	8:25	**INLSP302**	**0.00**	**15.3**	**22.5**	**10.3**	**0.0**	**1.4**	**17.7**	**5.4**	**0.00**	**77.6**	**14.6**	**6.4**
9/25/97	8:32	INLN2303	1.2	0.52	0.00	0.27	0.0	0.0	0.00	0.14	0.00	2.4	0.00	0.16
9/25/97	9:18	19250011	0.00	21.6	0.00	14.9	0.0	2.0	26.3	7.6	0.00	107.3	0.00	9.1
9/25/97	9:20	19250012	0.00	21.8	0.00	15.0	0.0	2.0	26.5	7.7	0.00	108.3	0.00	9.2
9/25/97	9:22	19250013	0.00	21.5	0.00	14.8	0.0	2.0	26.2	7.6	0.00	106.9	0.00	9.1
9/25/97	9:24	19250014	0.00	21.1	0.00	14.5	0.0	2.0	25.7	7.4	0.00	104.5	0.00	8.9
9/25/97	9:26	19250015	0.00	20.6	0.00	14.2	0.0	1.9	25.0	7.2	0.00	102.4	0.00	8.7
9/25/97	9:28	19250016	0.00	20.4	0.00	14.1	0.0	1.9	24.9	7.2	0.00	101.7	0.00	8.6
9/25/97	9:31	19250017	0.00	20.3	0.00	14.0	0.0	1.9	24.8	7.1	0.00	101.7	0.00	8.6
9/25/97	10:8	19250030	0.00	21.8	0.00	15.0	0.0	2.0	26.4	7.7	0.00	109.6	0.00	9.2
9/25/97	10:10	19250031	0.00	21.9	0.00	15.1	0.0	2.0	26.4	7.7	0.00	109.7	0.00	9.3
9/25/97	10:12	19250032	0.00	22.3	0.00	15.4	0.0	2.1	27.0	7.9	0.00	111.8	0.00	9.5
9/25/97	10:15	19250033	0.00	22.0	0.00	15.2	0.0	2.0	26.5	7.7	0.00	110.6	0.00	9.3
9/25/97	10:17	19250034	0.00	22.1	0.00	15.2	0.0	2.1	26.6	7.8	0.00	110.7	0.00	9.4
9/25/97	10:19	19250035	0.00	22.0	0.00	15.2	0.0	2.1	26.6	7.8	0.00	110.4	0.00	9.3
9/25/97	10:21	19250036	0.00	21.8	0.00	15.0	0.0	2.0	26.5	7.7	0.00	109.2	0.00	9.3
9/25/97	10:23	19250037	0.00	22.0	0.00	15.1	0.0	2.0	26.5	7.7	0.00	110.5	0.00	9.3
9/25/97	10:25	19250038	0.00	22.1	0.00	15.2	0.0	2.1	26.8	7.8	0.00	110.9	0.00	9.4
9/25/97	11:20	19250050	0.00	20.2	0.00	13.9	0.0	1.9	24.5	7.1	0.00	100.5	0.00	8.6
9/25/97	11:22	19250051	0.00	19.6	0.00	13.5	0.0	1.8	29.9	6.9	0.00	100.2	0.00	8.3
9/25/97	11:24	19250052	0.00	15.6	0.00	10.8	0.0	1.5	33.5	5.5	469.7	113.6	0.00	6.6
9/25/97	11:26	19250053	0.00	14.3	0.00	9.9	0.0	1.3	20.6	5.0	232.8	88.5	0.00	6.1
9/25/97	11:28	19250054	0.00	13.4	0.00	9.3	0.0	1.2	18.4	4.7	246.0	85.5	0.00	5.7
9/25/97	11:31	19250055	0.00	15.9	0.00	11.0	0.0	1.5	20.0	5.6	0.00	85.8	0.00	6.8

Bold text indicates that this is spiked data not used in average.

TABLE B-1. (continued)

Date	Time	File name	Hydrogen chloride		Toluene		Hexane		Methane		Carbon monoxide		Formaldehyde	
			ppm	Uncertainty	ppm	Uncertainty	ppm	Uncertainty	ppm	Uncertainty	ppm	Uncertainty	ppm	Uncertainty
9/25/97	11:33	**19250056**	**0.00**	19.5	0.00	13.4	0.0	1.8	23.7	6.9	0.00	97.7	0.00	8.3
9/25/97	11:35	**19250057**	**0.00**	20.6	0.00	14.2	0.0	1.9	24.9	7.2	0.00	101.7	0.00	8.7
9/25/97	11:37	**19250058**	**0.00**	20.1	0.00	13.8	0.0	1.9	24.3	7.1	0.00	99.7	0.00	8.5
9/25/97	11:39	**19250059**	**0.00**	19.9	0.00	13.7	0.0	1.8	24.2	7.0	0.00	98.5	0.00	8.4
9/25/97	11:41	**19250060**	**0.00**	20.0	0.00	13.7	0.0	1.9	24.5	7.0	0.00	99.0	0.00	8.5
9/25/97	11:43	**19250061**	**0.00**	19.9	0.00	13.7	0.0	1.8	24.1	7.0	0.00	98.3	0.00	8.4
9/25/97	12:11	**19250074**	**0.00**	21.3	0.00	14.6	0.0	2.0	25.4	7.5	0.00	105.5	0.00	9.0
9/25/97	12:14	**19250075**	**0.00**	21.6	0.00	14.9	0.0	2.0	25.9	7.6	0.00	106.6	0.00	9.2
9/25/97	12:16	**19250076**	**0.00**	21.7	0.00	14.9	0.0	2.0	26.0	7.6	0.00	107.0	0.00	9.2
9/25/97	12:18	**19250077**	**0.00**	21.7	0.00	15.0	0.0	2.0	26.0	7.6	0.00	107.5	0.00	9.2
9/25/97	12:20	**19250078**	**0.00**	21.7	0.00	15.0	0.0	2.0	26.0	7.6	0.00	107.4	0.00	9.2
9/25/97	12:22	**19250079**	**0.00**	21.8	0.00	15.0	0.0	2.0	25.9	7.7	0.00	107.8	0.00	9.2
9/25/97	12:24	**19250080**	**0.00**	22.3	0.00	15.4	0.0	2.1	26.2	7.8	0.00	109.8	0.00	9.4
9/25/97	12:27	**19250081**	**0.00**	22.0	0.00	15.2	0.0	2.0	26.0	7.8	0.00	108.1	0.00	9.3
9/25/97	12:57	**19250095**	**0.00**	22.6	0.00	15.5	0.0	2.1	26.3	7.9	0.00	111.0	0.00	9.6
9/25/97	12:59	**19250096**	**0.00**	22.7	0.00	15.7	0.0	2.1	26.4	8.0	0.00	111.4	0.00	9.6
9/25/97	13:1	**19250097**	**0.00**	23.2	0.00	16.0	0.0	2.2	26.8	8.2	0.00	114.0	0.00	9.8
9/25/97	13:3	**19250098**	**0.00**	23.6	0.00	16.3	0.0	2.2	27.2	8.3	0.00	115.5	0.00	10.0
9/25/97	13:5	**19250099**	**0.00**	23.7	0.00	16.4	0.0	2.2	27.4	8.4	0.00	116.1	0.00	10.1
9/25/97	13:7	**19250100**	**0.00**	23.5	0.00	16.2	0.0	2.2	27.4	8.3	0.00	114.7	0.00	9.9
9/25/97	13:10	**19250101**	**0.00**	23.1	0.00	15.9	0.0	2.1	26.5	8.1	0.00	112.7	0.00	9.8
9/25/97	14:32	**INLSP304**	**0.00**	**20.8**	**35.5**	**13.9**	**0.0**	**1.9**	**23.7**	**7.3**	**0.00**	**107.0**	**0.00**	**8.8**
9/25/97	14:39	INLN2305	0.39	0.2	0.00	0.1	0.0	0.0	0.2	0.1	0.00	1.9	0.00	0.1
9/25/97	15:35	19250122	0.00	15.1	0.00	10.4	0.0	1.4	36.7	5.3	493.3	110.2	0.00	6.4
9/25/97	15:37	19250123	0.00	14.7	0.00	10.1	0.0	1.4	23.0	5.1	200.0	87.1	0.00	6.2

Bold text indicates that this is spiked data not used in average.

TABLE B-1. (continued)

Date	Time	File name	Hydrogen chloride		Toluene		Hexane		Methane		Carbon monoxide		Formaldehyde	
			ppm	Uncertainty	ppm	Uncertainty	ppm	Uncertainty	ppm	Uncertainty	ppm	Uncertainty	ppm	Uncertainty
9/25/97	15:40	19250124	**0.00**	16.6	0.00	11.5	0.0	1.5	21.6	5.8	0.00	88.4	0.00	7.1
9/25/97	15:42	19250125	**0.00**	20.0	0.00	13.8	0.0	1.9	24.1	7.0	0.00	100.5	0.00	8.5
9/25/97	15:44	19250126	**0.00**	20.8	0.00	14.3	0.0	1.9	24.7	7.3	0.00	102.7	0.00	8.8
9/25/97	15:46	19250127	**0.00**	21.1	0.00	14.6	0.0	2.0	24.8	7.4	0.00	103.8	0.00	9.0
9/25/97	15:48	19250128	**0.00**	21.2	0.00	14.6	0.0	2.0	24.7	7.4	0.00	104.5	0.00	9.0
9/25/97	15:50	19250129	**0.00**	21.4	0.00	14.7	0.0	2.0	25.1	7.5	0.00	105.6	0.00	9.1
9/25/97	15:52	19250130	**0.00**	21.9	0.00	15.1	0.0	2.0	25.8	7.7	0.00	107.4	0.00	9.3
9/25/97	15:55	19250131	**0.00**	21.8	0.00	15.0	0.0	2.0	29.5	7.7	0.00	108.0	0.00	9.3
9/25/97	15:57	19250132	**0.00**	16.7	0.00	11.5	0.0	1.6	43.9	5.8	578.3	129.8	0.00	7.1
9/25/97	16:23	19250144	**0.00**	22.4	0.00	15.4	0.0	2.1	25.9	7.9	0.00	110.8	0.00	9.5
9/25/97	16:25	19250145	**0.00**	22.7	0.00	15.6	0.0	2.1	26.2	8.0	0.00	112.0	0.00	9.6
9/25/97	16:27	19250146	**0.00**	22.9	0.00	15.8	0.0	2.1	26.5	8.0	0.00	112.3	0.00	9.7
9/25/97	16:29	19250147	**0.00**	23.0	0.00	15.8	0.0	2.1	26.6	8.1	0.00	112.5	0.00	9.7
9/25/97	16:32	19250148	**0.00**	22.6	0.00	15.5	0.0	2.1	25.9	7.9	0.00	110.8	0.00	9.6
9/25/97	16:34	19250149	**0.00**	22.6	0.00	15.5	0.0	2.1	25.9	7.9	0.00	111.1	0.00	9.6
9/25/97	16:36	19250150	**0.00**	22.8	0.00	15.7	0.0	2.1	26.2	8.0	0.00	112.0	0.00	9.7
9/25/97	17:0	19250160	**0.00**	25.7	0.00	17.7	0.0	2.4	28.2	9.0	0.00	124.1	0.00	10.9
Average --->			0.03	20.3	0.00	14.0	0.0	1.9	25.4	7.1	34.7	103.3	0.00	8.6

Bold text indicates that this is spiked data not used in average.

TABLE B-2. FTIR RESULTS FROM THE SCRUBBER OUTLET

Date	Time	File name	Hydrogen chloride		Hexane		Methane		Carbon monoxide		Formaldehyde	
			ppm	Uncertainty	ppm	Uncertainty	ppm	Uncertainty	ppm	Uncertainty	ppm	Uncertainty
9/23/97	12:30	**OUTSP101**	**0.00**	**15.1**	**0.00**	**1.4**	**23.5**	**5.3**	**0.00**	**82.5**	**0.00**	**6.4**
9/23/97	12:53	**OUTSP103**	**0.00**	**13.4**	**0.00**	**1.2**	**20.7**	**4.7**	**0.00**	**75.0**	**0.00**	**5.7**
9/23/97	13:30	**OUTSP104**	**0.00**	**8.7**	**0.00**	**0.8**	**14.2**	**3.1**	**0.00**	**50.2**	**16.7**	**3.6**
9/23/97	13:38	**OUTSP105**	**0.00**	**9.2**	**0.00**	**0.9**	**14.9**	**3.2**	**0.00**	**52.4**	**15.5**	**3.8**
9/23/97	13:46	**OUTSP106**	**0.00**	**14.0**	**0.00**	**1.3**	**21.2**	**4.9**	**0.00**	**76.6**	**0.00**	**5.9**
9/23/97	15:16	19230001	0.00	13.5	0.00	1.3	20.5	4.8	0.00	77.0	0.00	5.7
9/23/97	15:19	19230002	0.00	13.9	0.00	1.3	20.6	4.9	0.00	78.9	0.00	5.9
9/23/97	15:21	19230003	0.00	13.6	0.00	1.3	20.3	4.8	0.00	78.0	0.00	5.8
9/23/97	15:23	19230004	0.00	13.7	0.00	1.3	20.6	4.8	0.00	78.6	0.00	5.8
9/23/97	15:25	19230005	0.00	13.6	0.00	1.3	20.9	4.8	0.00	76.8	0.00	5.8
9/23/97	15:27	19230006	0.00	13.6	0.00	1.3	20.6	4.8	0.00	78.0	0.00	5.8
9/23/97	15:29	19230007	0.00	13.7	0.00	1.3	20.9	4.8	0.00	77.8	0.00	5.8
9/23/97	15:31	19230008	0.00	13.5	0.00	1.3	20.8	4.8	0.00	77.1	0.00	5.7
9/23/97	15:34	19230009	0.00	13.8	0.00	1.3	23.1	4.8	0.00	79.0	0.00	5.8
9/23/97	15:36	19230010	0.00	11.9	0.00	1.1	36.3	4.2	544.3	115.8	0.00	5.1
9/23/97	15:38	19230011	0.00	10.5	0.00	0.98	20.4	3.7	102.1	65.0	0.00	4.5
9/23/97	16:6	19230024	0.00	7.3	0.00	0.68	15.8	2.6	139.3	51.8	0.00	3.1
9/23/97	16:8	19230025	0.00	7.3	0.00	0.68	16.0	2.6	126.5	50.8	0.00	3.1
9/23/97	16:10	19230026	0.00	7.3	0.00	0.67	16.0	2.5	127.4	50.6	0.00	3.1
9/23/97	16:12	19230027	0.00	7.2	0.00	0.67	15.9	2.5	129.6	50.5	0.00	3.0
9/23/97	16:14	19230028	0.00	7.1	0.00	0.66	15.9	2.5	143.5	51.3	0.00	3.0
9/23/97	16:17	19230029	0.00	7.1	0.00	0.66	16.1	2.5	153.0	52.2	0.00	3.0
9/23/97	16:19	19230030	0.00	7.1	0.00	0.66	15.3	2.5	153.8	52.3	0.00	3.0
9/23/97	16:47	19230042	0.00	6.8	0.00	0.64	15.2	2.4	163.7	51.8	0.00	2.9
9/23/97	16:49	19230043	0.00	6.9	0.00	0.64	14.7	2.4	165.6	52.2	0.00	2.9
9/23/97	16:51	19230044	0.00	6.9	0.00	0.64	14.6	2.4	163.9	52.1	0.00	2.9
9/23/97	16:53	19230045	0.00	6.9	0.00	0.64	14.8	2.4	166.0	52.4	0.00	2.9
9/23/97	16:55	19230046	0.00	6.9	0.00	0.64	14.4	2.4	165.6	52.4	0.00	2.9

Bold text indicates that this is spiked data not used in average.

TABLE B-2. (continued)

Date	Time	File name	Hydrogen chloride		Hexane		Methane		Carbon monoxide		Formaldehyde	
			ppm	Uncertainty	ppm	Uncertainty	ppm	Uncertainty	ppm	Uncertainty	ppm	Uncertainty
9/23/97	16:57	19230047	0.00	6.9	0.00	0.64	14.9	2.4	166.1	52.4	0.00	2.9
9/23/97	17:32	19230063	0.00	13.1	0.00	1.2	19.7	4.6	0.00	76.0	0.00	5.6
9/23/97	17:34	19230064	0.00	13.7	0.00	1.3	20.3	4.8	0.00	78.5	0.00	5.8
9/23/97	17:36	19230065	0.00	14.0	0.00	1.3	20.8	4.9	0.00	79.0	0.00	5.9
9/23/97	17:38	19230066	0.00	14.3	0.00	1.3	21.2	5.0	0.00	80.1	0.00	6.0
9/23/97	17:40	19230067	0.00	14.6	0.00	1.4	21.4	5.1	0.00	81.0	0.00	6.2
9/23/97	17:43	19230068	0.00	14.3	0.00	1.3	21.2	5.0	0.00	77.4	0.00	6.1
9/23/97	17:45	19230069	0.00	12.3	0.00	1.1	19.7	4.3	0.00	61.8	0.00	5.2
9/23/97	17:47	19230070	0.00	11.1	0.00	1.03	18.4	3.9	0.00	55.5	0.00	4.7
9/23/97	17:49	19230071	0.00	10.3	0.00	0.95	17.1	3.6	0.00	52.4	0.00	4.4
9/23/97	18:50	OUTAR107	0.00	1.4	0.00	0.13	4.6	0.49	0.00	9.7	0.00	0.59
Average--->			0.00	10.5	0.00	0.97	18.5	3.7	76.8	64.9	0.00	4.4

Bold text indicates that this is spiked data not used in average.

TABLE B-2. (continued)

Date	Time	File name	Hydrogen chloride		Hexane		Methane		Carbon monoxide		Formaldehyde	
			ppm	Uncertainty	ppm	Uncertainty	ppm	Uncertainty	ppm	Uncertainty	ppm	Uncertainty
9/24/97	8:34	**OUTSP201**	**0.00**	**12.1**	**0.00**	**1.1**	**15.8**	**4.3**	**0.00**	**68.5**	**9.0**	**5.1**
9/24/97	9:8	OUTUN202	0.00	14.5	0.00	1.3	30.1	5.1	0.00	82.4	0.00	6.1
9/24/97	9:41	**OUTSP203**	**0.00**	**8.2**	**0.00**	**0.8**	**11.8**	**2.9**	**0.00**	**47.1**	**13.6**	**3.5**
9/24/97	9:50	OUTUN204	0.00	13.5	0.00	1.3	18.7	4.8	0.00	75.0	0.00	5.7
9/24/97	10:17	19240010	0.00	13.9	0.00	1.3	18.8	4.9	0.00	77.4	0.00	5.9
9/24/97	10:21	19240011	0.00	13.9	0.00	1.3	18.8	4.9	0.00	77.2	0.00	5.9
9/24/97	10:24	19240012	0.00	14.0	0.00	1.3	19.1	4.9	0.00	77.6	0.00	5.9
9/24/97	10:26	19240013	0.00	14.1	0.00	1.3	19.1	5.0	0.00	78.1	0.00	6.0
9/24/97	10:28	19240014	0.00	14.2	0.00	1.3	19.1	5.0	0.00	78.5	0.00	6.0
9/24/97	10:30	19240015	0.00	14.1	0.00	1.3	18.9	4.9	0.00	78.5	0.00	6.0
9/24/97	10:32	19240016	0.00	14.3	0.00	1.3	19.4	5.0	0.00	79.3	0.00	6.1
9/24/97	10:34	19240017	0.00	14.4	0.00	1.3	19.4	5.1	0.00	79.8	0.00	6.1
9/24/97	10:37	19240018	0.00	14.4	0.00	1.3	19.3	5.0	0.00	79.7	0.00	6.1
9/24/97	11:9	19240032	0.00	15.2	0.00	1.4	20.7	5.3	0.00	83.9	0.00	6.4
9/24/97	11:11	19240033	0.00	15.1	0.00	1.4	20.6	5.3	0.00	83.6	0.00	6.4
9/24/97	11:13	19240034	0.00	15.3	0.00	1.4	20.9	5.4	0.00	84.1	0.00	6.5
9/24/97	11:15	19240035	0.00	15.2	0.00	1.4	20.6	5.4	0.00	83.9	0.00	6.5
9/24/97	11:17	19240036	0.00	15.2	0.00	1.4	20.4	5.3	0.00	83.7	0.00	6.4
9/24/97	11:20	19240037	0.00	15.1	0.00	1.4	20.3	5.3	0.00	84.0	0.00	6.4
9/24/97	11:22	19240038	0.00	15.4	0.00	1.4	20.5	5.4	0.00	85.4	0.00	6.5
9/24/97	11:24	19240039	0.00	15.7	0.00	1.5	21.0	5.5	0.00	86.5	0.00	6.7
9/24/97	11:26	19240040	0.00	15.7	0.00	1.5	21.0	5.5	0.00	86.8	0.00	6.7
9/24/97	12:15	19240062	0.00	15.4	0.00	1.4	21.5	5.4	0.00	84.5	0.00	6.5
9/24/97	12:17	19240063	0.00	15.3	0.00	1.4	21.4	5.4	0.00	83.7	0.00	6.5
9/24/97	12:19	19240064	0.00	15.3	0.00	1.4	21.2	5.4	0.00	83.8	0.00	6.5
9/24/97	12:21	19240065	0.00	15.1	0.00	1.4	21.0	5.3	0.00	82.7	0.00	6.4
9/24/97	12:24	19240066	0.00	15.0	0.00	1.4	20.8	5.3	0.00	82.5	0.00	6.4

Bold text indicates that this is spiked data not used in average.

TABLE B-2. (continued)

Date	Time	File name	Hydrogen chloride		Hexane		Methane		Carbon monoxide		Formaldehyde	
			ppm	Uncertainty	ppm	Uncertainty	ppm	Uncertainty	ppm	Uncertainty	ppm	Uncertainty
9/24/97	12:26	19240067	0.00	15.1	0.00	1.4	20.7	5.3	0.00	83.0	0.00	6.4
9/24/97	12:28	19240068	0.00	15.4	0.00	1.4	21.1	5.4	0.00	84.0	0.00	6.5
9/24/97	12:30	19240069	0.00	15.4	0.00	1.4	21.1	5.4	0.00	83.8	0.00	6.5
9/24/97	12:32	19240070	0.00	15.2	0.00	1.4	21.0	5.3	0.00	83.0	0.00	6.4
9/24/97	12:34	19240071	0.00	15.1	0.00	1.4	20.9	5.3	0.00	83.1	0.00	6.4
9/24/97	13:35	19240101	0.00	18.7	0.00	1.7	24.6	6.6	0.00	104.1	0.00	7.9
9/24/97	13:37	19240102	0.00	18.4	0.00	1.7	24.2	6.5	0.00	99.0	0.00	7.8
9/24/97	13:39	19240103	0.00	18.1	0.00	1.7	24.1	6.4	0.00	96.6	0.00	7.7
9/24/97	13:41	19240104	0.00	17.0	0.00	1.6	22.7	6.0	0.00	91.2	0.00	7.2
9/24/97	13:43	19240105	0.00	16.5	0.00	1.5	22.4	5.8	0.00	89.2	0.00	7.0
9/24/97	13:45	19240106	0.00	16.6	0.00	1.5	22.3	5.8	0.00	89.4	0.00	7.0
9/24/97	13:47	19240107	0.00	16.4	0.00	1.5	22.2	5.8	0.00	88.8	0.00	7.0
9/24/97	14:35	**OUTSP205**	**0.00**	**11.3**	**0.00**	**1.1**	**14.9**	**4.0**	**0.00**	**61.6**	**20.2**	**4.8**
9/24/97	14:49	OUTN2206	1.2	0.7	0.00	0.06	0.66	0.24	0.00	5.7	0.00	0.28
9/24/97	15:5	OUTUN207	0.00	14.2	0.00	1.3	19.7	5.0	0.00	77.5	0.00	6.0
Average--->			0.03	14.9	0.00	1.4	20.5	5.3	0.00	82.1	0.00	6.3

Bold text indicates that this is spiked data not used in average.

TABLE B-2. (continued)

Date	Time	File name	Hydrogen chloride		Hexane		Methane		Carbon monoxide		Formaldehyde	
			ppm	Uncertainty	ppm	Uncertainty	ppm	Uncertainty	ppm	Uncertainty	ppm	Uncertainty
9/25/97	**8:1**	**OUTSP301**	**0.00**	**6.2**	**0.00**	**0.57**	**7.7**	**2.2**	**0.00**	**40.0**	**30.7**	**2.6**
9/25/97	8:8	OUTN2302	0.88	0.34	0.00	0.03	0.00	0.10	7.0	2.6	0.00	0.1
9/25/97	8:56	19250001	0.00	9.4	0.00	0.87	11.7	3.3	0.00	64.2	0.00	4.0
9/25/97	8:58	19250002	0.00	9.5	0.00	0.89	11.7	3.4	0.00	65.0	0.00	4.0
9/25/97	9:1	19250003	0.00	9.7	0.00	0.90	11.8	3.4	0.00	65.4	0.00	4.1
9/25/97	9:3	19250004	0.00	9.6	0.00	0.90	11.8	3.4	0.00	65.0	0.00	4.1
9/25/97	9:5	19250005	0.00	9.6	0.00	0.89	11.7	3.4	0.00	64.5	0.00	4.1
9/25/97	9:7	19250006	0.00	9.6	0.00	0.89	11.8	3.4	0.00	64.2	0.00	4.1
9/25/97	9:9	19250007	0.00	9.6	0.00	0.89	11.8	3.4	0.00	64.2	0.00	4.1
9/25/97	9:11	19250008	0.00	9.6	0.00	0.89	11.8	3.4	0.00	64.0	0.00	4.1
9/25/97	9:42	19250018	0.00	9.0	0.00	0.84	11.2	3.2	0.00	60.8	0.00	3.8
9/25/97	9:45	19250019	0.00	9.1	0.00	0.85	11.4	3.2	0.00	61.4	0.00	3.9
9/25/97	9:47	19250020	0.00	9.1	0.00	0.85	11.4	3.2	0.00	61.4	0.00	3.9
9/25/97	9:49	19250021	0.00	9.1	0.00	0.85	11.3	3.2	0.00	61.1	0.00	3.9
9/25/97	9:51	19250022	0.00	9.1	0.00	0.85	11.3	3.2	0.00	61.1	0.00	3.9
9/25/97	9:53	19250023	0.00	9.1	0.00	0.84	11.3	3.2	0.00	60.7	0.00	3.8
9/25/97	9:55	19250024	0.00	9.1	0.00	0.84	11.3	3.2	0.00	61.1	0.00	3.8
9/25/97	9:57	19250025	0.00	9.1	0.00	0.85	11.2	3.2	0.00	61.5	0.00	3.9
9/25/97	10:0	19250026	0.00	9.2	0.00	0.86	11.4	3.2	0.00	62.2	0.00	3.9
9/25/97	10:32	19250041	0.00	9.4	0.00	0.87	11.5	3.3	0.00	61.9	0.00	4.0
9/25/97	10:34	19250042	0.00	9.4	0.00	0.87	11.6	3.3	0.00	62.2	0.00	4.0
9/25/97	10:36	19250043	0.00	9.4	0.00	0.88	11.6	3.3	0.00	62.5	0.00	4.0
9/25/97	10:38	19250044	0.00	9.4	0.00	0.88	11.8	3.3	0.00	62.2	0.00	4.0
9/25/97	10:41	19250045	0.00	9.4	0.00	0.88	11.7	3.3	0.00	62.0	0.00	4.0
9/25/97	10:43	19250046	0.00	9.4	0.00	0.87	11.6	3.3	0.00	61.4	0.00	4.0
9/25/97	10:45	19250047	0.00	9.2	0.00	0.86	11.5	3.2	0.00	60.6	0.00	3.9
9/25/97	10:47	19250048	0.00	9.2	0.00	0.85	11.5	3.2	0.00	60.4	0.00	3.9

Bold text indicates that this is spiked data not used in average.

TABLE B-2. (continued)

Date	Time	File name	Hydrogen chloride		Hexane		Methane		Carbon monoxide		Formaldehyde	
			ppm	Uncertainty	ppm	Uncertainty	ppm	Uncertainty	ppm	Uncertainty	ppm	Uncertainty
9/25/97	10:49	**19250049**	0.00	9.1	0.00	0.85	11.4	3.2	0.00	60.2	0.00	3.9
9/25/97	11:50	19250064	0.00	9.0	0.00	0.84	11.4	3.2	0.00	63.2	0.00	3.8
9/25/97	11:52	19250065	0.00	9.1	0.00	0.85	11.8	3.2	0.00	63.2	0.00	3.9
9/25/97	11:54	19250066	0.00	9.2	0.00	0.85	11.7	3.2	0.00	62.9	0.00	3.9
9/25/97	11:56	19250067	0.00	9.2	0.00	0.86	11.6	3.2	0.00	63.1	0.00	3.9
9/25/97	11:59	19250068	0.00	9.2	0.00	0.86	11.6	3.2	0.00	62.9	0.00	3.9
9/25/97	12:1	19250069	0.00	9.2	0.00	0.86	11.8	3.2	0.00	62.6	0.00	3.9
9/25/97	12:3	19250070	0.00	9.2	0.00	0.86	11.7	3.2	0.00	62.7	0.00	3.9
9/25/97	12:5	19250071	0.00	9.2	0.00	0.85	11.5	3.2	0.00	62.6	0.00	3.9
9/25/97	12:33	19250084	0.00	9.2	0.00	0.86	11.7	3.2	0.00	63.1	0.00	3.9
9/25/97	12:35	19250085	0.00	9.3	0.00	0.86	11.8	3.3	0.00	63.5	0.00	3.9
9/25/97	12:37	19250086	0.00	9.4	0.00	0.87	11.8	3.3	0.00	63.8	0.00	4.0
9/25/97	12:40	19250087	0.00	9.4	0.00	0.87	11.7	3.3	0.00	63.8	0.00	4.0
9/25/97	12:42	19250088	0.00	9.4	0.00	0.87	11.7	3.3	0.00	63.9	0.00	4.0
9/25/97	12:44	19250089	0.00	9.4	0.00	0.87	11.6	3.3	0.00	63.9	0.00	4.0
9/25/97	12:46	19250090	0.00	9.4	0.00	0.87	11.7	3.3	0.00	63.7	0.00	4.0
9/25/97	12:48	19250091	0.00	9.4	0.00	0.87	11.9	3.3	0.00	63.0	0.00	4.0
9/25/97	12:50	19250092	0.00	9.4	0.00	0.87	12.1	3.3	0.00	62.7	0.00	4.0
9/25/97	13:16	19250104	0.00	9.7	0.00	0.90	12.0	3.4	0.00	65.5	0.00	4.1
9/25/97	13:18	19250105	0.00	9.8	0.00	0.91	12.0	3.4	0.00	66.0	0.00	4.2
9/25/97	13:20	19250106	0.00	9.9	0.00	0.92	12.2	3.5	0.00	66.2	0.00	4.2
9/25/97	13:23	19250107	0.00	9.9	0.00	0.92	12.1	3.5	0.00	66.3	0.00	4.2
9/25/97	13:25	19250108	0.00	9.9	0.00	0.92	12.0	3.5	0.00	66.4	0.00	4.2
9/25/97	13:27	19250109	0.00	9.9	0.00	0.92	12.0	3.5	0.00	66.2	0.00	4.2
9/25/97	13:29	19250110	0.00	9.8	0.00	0.92	11.9	3.5	0.00	66.4	0.00	4.2
9/25/97	13:46	OUTDI303	0.00	5.3	0.00	0.49	6.2	1.9	0.00	34.7	0.00	2.2
9/25/97	13:54	OUTDI304	0.00	5.2	0.00	0.49	6.1	1.8	0.00	36.3	0.00	2.2

Bold text indicates that this is spiked data not used in average.

TABLE B-2. (continued)

Date	Time	File name	Hydrogen chloride		Hexane		Methane		Carbon monoxide		Formaldehyde	
			ppm	Uncertainty	ppm	Uncertainty	ppm	Uncertainty	ppm	Uncertainty	ppm	Uncertainty
9/25/97	**14:48**	**OUTSP305**	**0.00**	**8.0**	**0.00**	**0.74**	**10.3**	**2.8**	**0.00**	**61.1**	**13.3**	**3.4**
9/25/97	14:54	OUTN2306	0.40	0.17	0.00	0.02	0.00	0.06	7.2	2.0	0.00	0.1
9/25/97	15:14	19250112	0.00	9.7	0.00	0.90	12.4	3.4	0.00	75.3	0.00	4.1
9/25/97	15:16	19250113	0.00	9.6	0.00	0.90	12.1	3.4	0.00	68.1	0.00	4.1
9/25/97	15:18	19250114	0.00	9.6	0.00	0.89	12.0	3.4	0.00	66.6	0.00	4.1
9/25/97	15:20	19250115	0.00	9.5	0.00	0.88	11.9	3.3	0.00	65.7	0.00	4.0
9/25/97	15:22	19250116	0.00	9.5	0.00	0.88	12.1	3.3	0.00	65.2	0.00	4.0
9/25/97	15:24	19250117	0.00	9.5	0.00	0.88	12.3	3.3	0.00	65.0	0.00	4.0
9/25/97	15:27	19250118	0.00	9.4	0.00	0.87	12.1	3.3	0.00	64.5	0.00	4.0
9/25/97	16:5	19250136	0.00	8.3	0.00	0.77	11.3	2.9	0.00	59.5	0.00	3.5
9/25/97	16:8	19250137	0.00	8.4	0.00	0.78	11.4	2.9	0.00	60.1	0.00	3.6
9/25/97	16:10	19250138	0.00	8.5	0.00	0.79	11.6	3.0	0.00	60.5	0.00	3.6
9/25/97	16:12	19250139	0.00	8.7	0.00	0.81	11.5	3.0	0.00	61.6	0.00	3.7
9/25/97	16:14	19250140	0.00	8.7	0.00	0.81	11.7	3.1	0.00	61.6	0.00	3.7
9/25/97	16:16	19250141	0.00	8.8	0.00	0.81	11.6	3.1	0.00	61.6	0.00	3.7
9/25/97	16:44	19250154	0.00	9.3	0.00	0.87	12.0	3.3	0.00	65.9	0.00	4.0
9/25/97	16:47	19250155	0.00	9.3	0.00	0.86	11.9	3.3	0.00	65.8	0.00	3.9
9/25/97	16:49	19250156	0.00	9.2	0.00	0.86	12.1	3.2	0.00	65.6	0.00	3.9
9/25/97	16:51	19250157	0.00	9.2	0.00	0.85	11.8	3.2	0.00	65.7	0.00	3.9
9/25/97	16:53	19250158	0.00	9.2	0.00	0.85	11.8	3.2	0.00	65.3	0.00	3.9
Average --->			0.02	8.9	0.00	0.83	11.2	3.1	0.20	61.1	0.00	3.8

Bold text indicates that this is spiked data not used in average.

B-2 FTIR FIELD DATA RECORDS

FTIR FIELD DATA FORM

(FTIR Sampling Data)

PROJECT NO. 4701-08-08 **BAROMETRIC:** 749 mm Hg

PLANT: GM Powertrain **DATE:** 9/23/97 **OPERATOR:** LMH

SAMPLE TIME	FILE NAME	PATH		NUMBER SCANS	RES (cm-1)	CELL TEMP (F)	SPIKED/ UNSPIKED	SAMPLE COND.	SAMPLE FLOW	CELL PRES.	BKG
11:55	INLSP101		Inlet air w/Spikegas	250	2	275	SP		4.0 lpm	756	0923a
			1.0 lpm toluene 196 ppm								
			1.0 lpm SF6 4 ppm and formaldehyde @ 100C								
			flow ---Cell = 4.0 lpm, vent = 2.0 lpm								
12:04	POUR101		BAG #1 - pouring line	250	2	275		static		745	0923a
			sampled 10:00 am to 11:32 am								
12:14	BKG0923b		Background, N2	500	2	275		dynamic	5 lpm	755	
12:21	POUR102		BAG #1 - pouring line	250	2	275		static			0923b
12:33	SHK3_101		BAG #2 - Shakeout -3	250	2	275		static		349*	0923b
			* Sucked out bag with pump before realized value was incorrect								
			Stack #3, shakeout line #4								
12:58	INLSP102		Inlet - In stack w/ spike gas	250	2	274	SP	dynamic	4.0 lpm	760	0923b
			1.0 lpm toluene 196 ppm								
			1.0 lpm SF6 4 ppm and formaldehyde @ 100C								
			flow ---Cell = 4.0 lpm, vent = 2.0 lpm								
13:07	INLN2103		N2 flooding spike line	250	2	274	N2	dynamic	4.0 lpm	760	0923b
13:27	OUTSP101		Outlet - in stack, spike SF6, 4 ppm@ 1.0lpm	250	2	275	SP	dynamic	4.0 lpm	758	0923b
	BAD SPIKE		w/formaldehyde @ 100 C, toluene , 196 ppm,								
			@ 1.0 lpm, flow - cell = 4.0 lpm, vent = 2.0 lpm								
	OUTN2102		N2 flooding spike line	250	2	275	N2	dynamic	4.0 lpm	758	0923b
	BAD SPIKE		** didn't work **								
13:50	OUTSP103		SF6 @ 7.0 lpm in outlet	250							
	BAD SPIKE		** SPIKE INCORRECT **								
14:00	BKG0923c		Background, N2 only	500	2	275	N2	dynamic			
14:14	INLUN104		Inlet	250	2	275	UN	dynamic	5.0 lpm	757	0923c
14:19	INLUN105		Inlet	250	2	275	UN	dynamic	5.0 lpm	757	0923c
14:27	OUTSP104		Outlet - spike SF6, toluene and formaldehdye	250	2	275	SP	dynamic	4.0 lpm	758	0923c
			SF6 = 2.0 lpm w/formaldehyde @ 100 C and toluene @ 1.0 lpm								
14:35	OUTSP105		same as above								
			Manual sampling started at 14:12								

FTIR FIELD DATA FORM

PROJECT NO. 4701-98-08 *(FTIR Sampling Data)* **BAROMETRIC:** 749 mm Hg

PLANT: GM Powertrain **DATE:** 9/23/97 **OPERATOR:** LMH

SAMPLE TIME	FILE NAME	PATH		NUMBER SCANS	RES (cm-1)	CELL TEMP (F)	SPIKED/ UNSPIKED	SAMPLE COND.	SAMPLE FLOW	CELL PRES.	BKG
14:43	OUTSP106		OUTLET -- NO SPIKE!!!	250	2	275	UN	dynamic	5.0 lpm	758	0923c
14:49	INLUN106		INLET	250	2	275					
14:50			Process went down - inlet flow dropped								
			Blowers off								
15:29	INLUN107		INLET	250	2	275	UN	dynamic	5.0 lpm	757	0923c
15:45	BKG0923d		Background, N2	500	2	275		dynamic	5.0 lpm	758	
15:52	SHK4_101		BAG #3 -- Shakeout 4	250	2	275		static		748	0923d
15:56	SHK4_102		BAG #3 -- Shakeout 4	250	2	275		static		748	0923d
16:05	INLUN108		INLET	250	2	275	UN	dynamic	5.0 lpm	755	0923d
			Process software								
16:12	1923001		Outlet	250	2	277	UN	dynamic	5.0 lpm	755	0923d
16:38	1023011		Stop								
			1923012 and 1923013 purge and fill cell								
16:40			Process down								
16:41	1923014		INLET	250	2	275	UN	dynamic	5.0 lpm	757	0923d
16:58	1923021		Stop								
			1923022 and 1923023 purge and fill cell								
17:02	1923024		Outlet								
17:17	1923030		Stop								
			Process software								
17:21	1923033		INLET	250	2	275	UN	dynamic	5.0 lpm	758	0923d
17:39	1923039		Stop								
			40 and 41 purge and fill cell								
17:43	1923042		Outlet	250	2	275	UN	dynamic	5.0 lpm	759	0923d
17:51			Found probe and probe box unplugged								
			Probe @ 125C, Box @ 188C								
			only effects this outlet run								
	1923047		Stop								
18:05	1923052		INLET	250	2	275	UN	dynamic	5.0 lpm	759	0923d

FTIR FIELD DATA FORM

PROJECT NO. 4701-08-08 *(FTIR Sampling Data)* **BAROMETRIC:** 749 mm Hg

PLANT: GM Powertrain **DATE:** 9/23/97 **OPERATOR:** LMH

SAMPLE TIME	FILE NAME	PATH		NUMBER SCANS	RES (cm-1)	CELL TEMP (F)	SPIKED/ UNSPIKED	SAMPLE COND.	SAMPLE FLOW	CELL PRES.	BKG
18:20			Process restarted								
18:24	1923060		Stop								
			61 and 62 purge and fill cell								
18:29	1923063		Outlet	250	2	275	UN	dynamic	5.0 lpm	759	0923d
18:45			Process went down								
18:48	1923071		Stop	250	2	275	UN	dynamic	5.0 lpm	759	0923d
19:01	N20923c		N2 only	250	2	275	UN	dynamic	5.0 lpm	759	0923d
19:10	MIX0923b		Toluene flow off, SF6 4ppm, @ 2.0 lpm	250	2	275	UN	dynamic	3.0 lpm	755	0923d
			w/formaldehyde @ 100C								
19:20	CTS0923c		Ethylene 20 ppm	250	2	275		static		754	0923d
19:24	BKG0923e		N2 only	250	2	275		static		754	
19:33	INAIR109		Air from roof - Inlet	250	2	276			5.0 lpm	757	0923e
19:46	OUTAR107		Air from roof - Outlet	250	2	276			5.0 lpm	757	0923e

FTIR FIELD DATA FORM

(FTIR Sampling Data)

PROJECT NO. 4701-08-08 **BAROMETRIC:** 752 mm Hg

PLANT: GM Powertrain **DATE:** 9/24/97 **OPERATOR:** LMH

SAMPLE TIME	FILE NAME	PATH		NUMBER SCANS	RES (cm-1)	CELL TEMP (F)	SPIKED/ UNSPIKED	SAMPLE COND.	SAMPLE FLOW	CELL PRES.	BKG
7:46	N20924a	20m	N2 only direct to cell	250	2	275		dynamic	5.0 lpm	758	0923e
8:29	OUTSP201		Outlet - Spike	250	2	275	SP	dynamic	4.0 lpm	758	0924a
			SF6, 4ppm @ 2.0 lpm w/formaldehyde @ 100C								
			Toluene valve off								
			Cell flow = 4.0 lpm, vent flow = 2.0 lpm								
8:41	INLSP201		Inlet - Spike same conditions as above	250	2	275	SP	dynamic	4.0 lpm	759	0924a
8:51			Manual sampling started								
9:06	OUTUN202		Outlet	250	2	275	UN	dynamic	3.0 lpm	760	0924a
9:08			Process down								
9:16	BKG0924b		Background	500	2	275	UN	dynamic	5.0 lpm	760	
9:30	INLSP202		Inlet spike w/toluene	250	2	276	SP	dynamic	4.0 lpm	758	0924b
			SF6 4 ppm @ 2.0 lpm w/formaldehyde @ 100C								
			and toluene 196 ppm @ 1.0 lpm								
			Cell flow = 4.0 lpm, vent flow = 2.0 lpm								
9:35			Manual restart								
9:39	OUTSP203		Outlet spike - same as above	250	2	275	UN	dynamic	3.0 lpm	759	0924a
			Shut off spike at 5.0 lpm, SF6 was gone in <3 min.								
9:48	OUTUN204		Outlet	250	2	276	UN	dynamic	5.0 lpm	756	0924b
			Process software								
9:55	19240001		Inlet	250	2	276	UN	dynamic	5.0 lpm	759	0924b
10:11	19240007		Stop								
			0008 and 0009 purge and fill cell								
10:17	19240010		Outlet	250	2	276	UN	dynamic	5.0 lpm		0924b
10:36	19240018		Stop								
			0019 and 0020 & 0021 purge and fill cell								
10:43	19240022		Inlet	250							0924b
10:58	19240028		Stop								
			29,30 &31 purge and fill cell								
11:05	19240032		Outlet	250							
11:18-11:45			Manual port change -- Method 23								
11:26	19240040		Stop								

FTIR FIELD DATA FORM

PROJECT NO. 4701-08-08 *(FTIR Sampling Data)* **BAROMETRIC:** 752 mm Hg

PLANT: GM Powertrain **DATE:** 9/24/97 **OPERATOR:** LMH

SAMPLE TIME	FILE NAME	PATH		NUMBER SCANS	RES (cm-1)	CELL TEMP (F)	SPIKED/ UNSPIKED	SAMPLE COND.	SAMPLE FLOW	CELL PRES.	BKG
11:31	BKG0924c		Background	500							
			Restart process software								
11:49	19240001		Inlet (rename to 0051)	250	2	275	UN	dynamic	5.0 lpm	758	0924c
12:09	19240009		Stop (rename to 0059)								
12:13	19240012		Outlet (rename to 0062)	250	2	276	UN	dynamic	5.0 lpm	756	0924c
12:35	19240021		Stop (rename to 0071)								
12:41	19240024		Inlet (rename to 0074)	250	2	275	UN	dynamic	5.0 lpm	758	0924c
13:04	19240034		Stop (rename to 0084)								
13:15	N20924b		N2 direct to cell, only	250	2	275		dynamic	5.0 lpm	758	
			NO BAG #4 TESTED								
13:20	SHK3_201		Shakeout #3 - BAG #5	250	2	276	UN	static		745	0924c
13:23	SHK3_202		Shakeout #3 - BAG #5	250	2	276	UN	static		745	0924c
13:27	SHK5_101		Shakeout #5 - BAG #6	250	2	276	UN	static		745	0924c
13:33	19240001		Outlet (rename to 0101)	250	2	276	UN	dynamic	5.0 lpm	756	0924c
13:49	19240007		Stop (rename to 0107)								
13:52	19240010		Inlet (rename to 0110)	250	2	276	UN	dynamic	5.0 lpm	756	0924c
14:09	19240017		Stop (rename to 0117)								
14:21	INSP203		Inlet spike	250	2	276	SP	dynamic	4.0 lpm	758	0924c
			SF6 @ 2.0 lpm w/formaldehyde @ 110C								
			toluene @ 1.0 lpm								
			Cell flow = 4.0 lpm, Vent = 2.0 lpm								
14:33	OUTSP205		Outlet - Spike	250	2	275	SP	dynamic	4.0 lpm	758	0924c
14:46	OUTN2206		Nitrogen in stack line - Outlet	250	2	275	N2	dynamic	4.0 lpm	758	0924c
14:56	INLN2204		Nitrogen in stack - inlet	250	2	275	N2	dynamic	4.0 lpm	758	0924c
15:03	OUTUN207		Outlet	250	2	275	UN	dynamic	5.0 lpm	755	0924c
15:16	N20924c		N2 direct to cell	250	2	275	N2	dynamic	5.0 lpm	755	0924c
15:23	BKG0924d		Background	500	2	275		dynamic	5.0 lpm	755	0924c
15:30	COOLS101		BAG #7 - Cooling stack	250	2	276		static		745	0924d
15:35	COOLS102		BAG #7 - Cooling stack	250	2	276		static		746	0924d

FTIR FIELD DATA FORM

PROJECT NO. 4701-98-98 *(FTIR Sampling Data)* **BAROMETRIC:** 735 mm Hg

PLANT: GM Powertrain **DATE:** 9/25/97 **OPERATOR:** LMH

SAMPLE TIME	FILE NAME	PATH		NUMBER SCANS	RES (cm-1)	CELL TEMP (F)	SPIKED/ UNSPIKED	SAMPLE COND.	SAMPLE FLOW	CELL PRES.	BKG
7:59	OUTSP301		Outlet spike	250	2	275	SP	dynamic	4.0 lpm	742	0925a
			SF6 4 ppm @ 2.0 lpm w/formaldehyde @ 110 C								
			and toluene 196 ppm @ 1.0 lpm								
			cell flow = 4.0 lpm, vent flow = 2.0 lpm								
8:06	OUTN2302		Outlet - Nitrogen only in line	250	2	275	N2	dynamic	4.0 lpm	742	0925a
8:13	INLSP301		Inlet - Spike	250	2	275	SP	dynamic	4.0 lpm	742	0925a
8:23	INLSP302		Inlet - Spike	250	2	275	SP	dynamic	5.0 lpm	742	0925a
			Spike levels same as above								
			cell flow = 5.0 lpm, vent flow = 4.0 lpm								
8:31	INLN2303		Inlet - Nitrogen only in sample line	250	2	275	N2	dynamic	4.0 lpm		
8:34			Manual runs started								
			Process software								
8:54	19250001		Outlet	250	2	276	UN	dynamic	5.0 lpm	743	0925b
9:12	19250008		Stop								
9:16	19250011		Inlet	250	2	276	UN	dynamic	5.0 lpm	743	0925b
9:31	19250017		Stop								
			Stopped program								
9:40			Moved inlet ports								
9:41	19250018		Outlet - Continuous software restarted	250	2	276	UN	dynamic	5.0 lpm	743	0925b
10:00	19250026		Stop								
10:08	19250030		Inlet	250	2	276	UN	dynamic	5.0 lpm	742	0925b
10:26	19250038		Stop								
10:30	19250041		Outlet	250	2	276	UN	dynamic	5.0 lpm	745	0925b
10:49	19250049		Stop								
11:01	N2BAG101		N2 only in bag - Nitrogen blank	250	2	276	N2	static		736	0925c
11:07	COOLR101		Bag #9 - Cooling stack "R"	250	2	275		static		733	0925c
11:11	COOLR102		Bag #9 - Cooling stack "R"	250	2	275		static		733	0925c
11:17	19250050		Inlet	250	2	276	UN	dynamic	5.0 lpm	747	0925c
11:25			Process down								
11:32			Process up and running								
11:44	19250061		Stop								

FTIR FIELD DATA FORM

PROJECT NO. 4701-08-08 *(FTIR Sampling Data)* **BAROMETRIC:** 749 mm Hg

PLANT: GM Powertrain **DATE:** 9/25/97 **OPERATOR:** LMH

SAMPLE TIME	FILE NAME	PATH		NUMBER SCANS	RES (cm-1)	CELL TEMP (F)	SPIKED/ UNSPIKED	SAMPLE COND.	SAMPLE FLOW	CELL PRES.	BKG
11:48	19250064		Outlet	250	2	276	UN	dynamic	5.0 lpm	747	0925c
12:05	19250071		Stop								
12:10	19250074		Inlet	250	2	276	UN	dynamic	5.0 lpm	747	0925c
12:26	19250081		Stop								
12:31	19250084		Outlet	250	2	275	UN	dynamic	5.0 lpm	746	0925c
12:50	19250092		Stop								
12:55	19250095		Inlet	250	2	275	UN	dynamic	5.0 lpm	744	0925c
13:10	19250101		Stop								
13:14	19250104		Outlet	250	2	275	UN	dynamic	5.0 lpm	745	0925c
13:29	19250110		Stop								
13:44	Outdi303		Diluted outlet - outlet sample	250	2	275	diluted @	dynamic	5.0 lpm	745	0925c
			diluted with N2 at manifold				manifold				
			sample = 2.5 lpm								
			N2 = 2.5 lpm								
13:50	outdi304		Diluted outlet - same as above								
13:58	N20925c		N2 to cell								
14:00	Bkg0925d		Background	500							
14:07	COOLM101		BAG #10 - cooling main stack	250	2	275		static		738	0925d
14:11	COOLM102		BAG #10 - cooling main stack	250	2	275		static		738	0925d
14:17	BACK101		BAG #8 - Background bag	250	2	275		static		733	0925d
			sampled inside facility on 1st floor								
			near the cooling main stack								
14:20	BACK102		Same as above	250	2	275		static		733	0925d
14:30	INLSP304		Inlet spike SF6 4 ppm @ 1.0 lpm w/formaldehyde	250	2	276	SP	dynamic	5.0 lpm	746	0925d
			@ 100C and toluene 196ppm @ 1.0 lpm								
			cell flow = 5.0 lpm, vent = 2.0 lpm								
14:37	INLN2305		Inlet zero - N2 only in sample line	250	2	276	N2	dynamic	5.0 lpm	745	0925d
14:46	OUTSP305		Outlet spike (same as above)	250	2	276	SP	dynamic	5.0 lpm	745	0925d
14:53	OUTN2306		Outlet - zero - N2 in sample line	250	2	276	N2	dynamic	5.0 lpm	745	0925d

FTIR FIELD DATA FORM

(FTIR Sampling Data)

PROJECT NO. 4701-08-08 **BAROMETRIC:** 749 mm Hg

PLANT: GM Powertrain **DATE:** 9/25/97 **OPERATOR:** LMH

SAMPLE TIME	FILE NAME	PATH		NUMBER SCANS	RES (cm-1)	CELL TEMP (F)	SPIKED/ UNSPIKED	SAMPLE COND.	SAMPLE FLOW	CELL PRES.	BKG
15:11	19250112		Outlet	250	2	275	UN	dynamic	5.0 lpm	745	0925d
15:27	19250118		Stop								
15:33	19250122		Inlet	250	2	275	UN	dynamic	5.0 lpm	745	0925d
15:35			Process down								
15:43			Process up								
15:55			Process down								
	19250132		Stop								
16:01			Process up								
16:03	19250136		Outlet	250	2	275	UN	dynamic	5.0 lpm	747	0925d
16:16	19250141		Stop								
16:21	19250144		Inlet	250	2	275	UN	dynamic	5.0 lpm		0925d
16:37	19250150		Stop								
16:46	19250154		Outlet	250	2	276	UN	dynamic	5.0 lpm	746	0925d
16:54	19250158		Stop								
16:56	19250160		Inlet	250	2	276	UN	dynamic	5.0 lpm	744	0925d
16:58			Stop								
17:08	N20925d		N2 direct to cell	250	2	275		dynamic	5.0 lpm	747	0925d

FTIR FIELD DATA FORM

PROJECT NO. 4701-08-08 *(Background and calibration spectra.)* **BAROMETRIC:** 749 mm Hg

PLANT: GM Powertrain **DATE:** 9/23/97 **OPERATOR:** T. Geyer

SAMPLE TIME	FILE NAME	PATH		NUMBER SCANS	RES (cm-1)	CELL TEMP (F)	PRESSURE	BKG	APOD	NOTES
9:00	N20923a		N2 only	250	2	275	760	0922a	gain = 4	
9:21			Cell leak check T=0 2.3 torr, T=87s 3.3torr							
9:28	BKG0923a		Background, N2 only	500	2	275	756			flowing - 5lpm
9:37	CTS0923a		Ethylene, 20 ppm in nitrogen	250	2	275	752	0923a		static
9:43	CTS0923b		Ethylene, 20 ppm in nitrogen	250	2	275	752	0923a		static
9:50	SF60923a		SF6 direct to cell - 4.01 ppm	250	2	275	752	0923a		static
9:57	TOL0923a		Toluene direct to cell 196.9 ppm in air	250	2	275	752	0923a		static
10:10	FOR0923a		Formaldehyde perm tube	250	2	275	752	0923a		static
			1000 lpm of N2 @ 100 C 94,087 nano L/min							
			direct to cell							
10:38	FOR0923b		Formaldehyde - same as above	250	2	275	752	0923a		dynamic - 1 lpm
10:47	AIR0923a		Inlet - Air only	250	2	275	752	0923a		dynamic - 5 lpm
11:07	AIR0923b		Outlet - air only	250	2	275	752	0923a		dynamic - 5 lpm
11:42	MIX0923b		Toluene 196.9 ppm @ 1 lpm	250	2	275	752	0923a		dynamic - 5 lpm
			Kintek = SF6 - 4ppm @ 1.0 lpm and form @ 100C							
			direct to cell							

FTIR FIELD DATA FORM

(Background and calibration spectra.)

PROJECT NO. 4701-08-08 **BAROMETRIC:** 752 mm Hg

PLANT: GM Powertrain **DATE:** 9/24/97 **OPERATOR:** T. Gever

SAMPLE TIME	FILE NAME	PATH		NUMBER SCANS	RES (cm-1)	CELL TEMP (F)	PRESSURE	BKG	APOD	NOTES
7:50	BKG0924a		Background, N2 only	500	2	275	758			5 lpm flow
8:14	CTS0924a		20 ppm Ethylene in nitrogen	250	2	275	757	0924a		
8:57	MIX0924a		SF6, 4 ppm @ 2.0 lpm with formaldehyde @ 100 C	250	2	275	757	0924a		
			94,000 nanoL/min and toluene 196 ppm @ 1.0 lpm							
9:00			Leak check cell T=0 3.7, T=60sec 4.3							
			0.6 mm Hg/60 sec							
9:16	BKG0924b		N2, Background	500	2	275	760			
11:31	BKG0924c		N2, Background	500	2	275	758			
15:23	BKG0924d		N2, Background	500	2	275	755			
15:47	CTS0924b		20 ppm Ethylene	250	2	275		0924d		

FTIR FIELD DATA FORM

(Background and calibration spectra.)

PROJECT NO. 4701-08-08 **BAROMETRIC:** 735 mm Hg

PLANT: GM Powertrain **DATE:** 9/25/97 **OPERATOR:** T. Geyer

SAMPLE TIME	FILE NAME	PATH		NUMBER SCANS	RES (cm-1)	CELL TEMP (F)	PRESSURE	BKG	APOD	NOTES
7:29	N20925a		N2 only direct to cell	250	2	275	742	0924a		
7:32	BKG0925a		Background	500		275				5 lpm
7:42	CTS0925a		Ethylene 20ppm in Nitrogen	250	2	275	742	0925a		
7:47	CTS0925b		Ethylene 20ppm in Nitrogen	250	2	275	742	0925a		
8:39	MIX0925a		SF6 4ppm @ 2.0 lpm with formaldehyde @ 110 C	250	2	276	739	0925a		3.0 lpm
			(202,000 nanoL/min) and toluene 196 ppm @ 1.0 lpm							
			direct to cell							
8:43	N20925b		N2 only, direct to cell	250	2	276	747	0925a		5.0 lpm
8:48	BKG0925b		Background, N2 only	500	2	276				
10:54	BKG0925c		Background, N2 only	500		276	746			
13:58	N20925c		N2 only, direct to cell	250	2	276	745	0925c		5.0 lpm
14:00	BKG0925d		Background, N2 only	500	2	276	745			
15:04	MIX0925b		SF6 4ppm @ 1.0 lpm w/ formaldehyde @ 100C	250	2	276	741	0925d		
			(94,000 nanoL/min) and toluene 196 ppm @ 1.0 lpm							
			direct to cell							
17:12	BKG0925e		Background, N2 only	500						
17:20	CTS0925c		Ethylene, 20 ppm					0925e		

Run #1

FTIR FIELD DATA FORM

Sampling Data

PROJECT NO. 37.04.25
PLANT: GMPowerTrain Saginaw, MI
OPERATOR: JMH

DATE: 9/23/97

BAROMETRIC: 749 mm Hg
LEAK CHECK-START:
LEAK CHECK-END:

SAMPLE TIME	FILE NAME	PATH	LOCATION / NOTES	NUMBER SCANS	RES (cm-1)	CELL TEMP (F)	SPIKED/ UNSPIKED	SAMPLE COND.	SAMPLE FLOW	CELL PRESS.	BKG
11:55	INLSP101		INLET - AIR w/ SPIKE Gas	250	2	275	SP		4.0 lpm	756	0923a
			1.0 lpm toluene 146ppm								
			1.0 lpm SF_6 4ppm and formaldehyde @ 100°C								
			flows => Cell = 4.0 lpm								
			Vent = 2.0 lpm								
12:04	POUR101		BAG #1 - POURING LINE	250	2	275	—	static	—	745	0923a
			Sampled 10:00 am to 11:32 am								
12:14	BKG0923b		Background, N_2	500	2	275	-	dynamic	5 lpm	755	—
12:21	POUR102		BAG #1 - Pouring Line	250	"	"	"	Static	—		0923b
* 12:33	SHK3_001		BAG #2 - Shakeout - 3	250	"	"	"	"	*	349 *	"
			* Sucked out Bag with pump before retrieved valve was inserted								
			Stack #3, Shakeout Line #4								
12:58	INLSP102		INLET - IN STACK w/ Spike Gas	250	2	274	SP	Dynamic	4.0 lpm	760	"
			1.0 lpm toluene 146ppm								
			1.0 lpm SF_6 4ppm and form @ 100°C								
			flows => Cell = 4.0 lpm	↳ 54,000	nanol/min						
			Vent = 2.0 lpm								
13:07	INLN2103		N_2 flushing Spike line	"	"	"	N_2	"	"	760	"

FTIR FIELD DATA FORM

Sampling Data

PROJECT NO. 3804-25
PLANT: GMPOWER Saginaw, ME
OPERATOR: GMK

DATE: 4/23/97

(7/19 Jun 11)
BAROMETRIC: ~~29~~ mm Hg
LEAK CHECK-START:
LEAK CHECK-END:

SAMPLE TIME	FILE NAME	PATH	LOCATION / NOTES	NUMBER SCANS	RES (cm-1)	CELL TEMP (F)	SPIKED/ UNSPIKED	SAMPLE COND.	SAMPLE FLOW	CELL PRESS.	BKG
13:27	OUTSP101		OUTLET - IN STACK, SPIKE	250	~~250~~ 2	275	SP	dynamic	4.6 lpm	758	0123b
	(Bad spike)		SF_6, 4ppm @ 1.0 lpm w/ Formaldehyde @ 100°C			177					
			Toluene, 10ppm, @ 1.0 lpm		0.5						
			Flow — Cell = 4.0 lpm	SPIKE							
			Vent = 2.0 lpm								
	OUTN2102		N_2 flooding Spike Line	250	~~250~~ 2	275	N_2	dynamic	4.0	"	"
	(Bad spike)		* Don't work *								
13:50	OUTSP103		SF_6 @ 7.0 lpm in OUTLET	250							
	(Bad spike)		* SPIKE INCORRECT — *								
14:00	BKG0123c		Background, N_2 only	500	"	"	—	—			
14:14	INLUN104		Inlet	250	2	275	UN	dynamic	5.0 lpm	757	0923c
14:19	INLUN105		"	"	"	"	"	"	"	"	"
14:27	OUTSP104		OUTLET - SPIKE	"	"	"	SP	dynamic	4.0 lpm	758	"
			SF_6, Toluene, and formaldehyde								
(Good)			~~Same as above (outspike)~~								
			SF_6 = 2.0 lpm w/ formaldehyde @ 100°C								
			and Toluene @ 1.0 lpm								
14:35	OUTSP105		"								
	(Good)										

Manual Sampling Started @ 14:12

FTIR FIELD DATA FORM

Sampling Data

PROJECT NO. 3824-25
PLANT: GenPower Sanford, ME
OPERATOR: JMH

DATE: 9/23/97

BAROMETRIC: 749 mmHg
LEAK CHECK-START:
LEAK CHECK-END:

SAMPLE TIME	FILE NAME	PATH	LOCATION / NOTES	NUMBER SCANS	RES (cm-1)	CELL TEMP (F)	SPIKED/ UNSPIKED	SAMPLE COND.	SAMPLE FLOW	CELL PRESS.	BKG
14:43	OUTSPUN06		OUTLET - NO SPIKE!	250	2	275	UN	dynamic	5.0 lpm	758	0923c
14:49	INLUN106		INLET	250	2	275					
14:50	Process Went Down - Inlet flow Dropped										
	- Blower is off -										
15:29	INLUN107		INLET	250	2	275	UN	dynamic	5.0 lpm	757	0923c
15:45	BKG0923d		Background, N_2	500	"	"	—	"	"	758	—
15:52	SHK4-101		Bay #3 - Shakeout 4	250	2	275	—	static	—	748	0923d
15:56	SHK4-102		"	"	"	"	"	"	"	"	"
16:05	INLUN108		INLET	"	"	"	UN	dynamic	5.0 lpm	755	0923d
	Process Software										
16:[illegible]	1923001		Outlet	250	2	277	UN	dynamic	5.0 lpm	755.	0923d
16:38	1923011		Stop								
	1923012 and 1923013 purge and fill cell										
Process Down at	16:40										
16:41	1923014		INLET	250	2	275	UN	dynamic	5.0 lpm	757	0923d
16:58	1923024		stop								
	1923022 and 1923023 Purge and fill cell										
17:02	1923024		OUTLET								
17:17	1923030		Stop								

FTIR FIELD DATA FORM

Sampling Data

PROJECT NO. 3804-25
PLANT: GMPOWER Saguna, MI
OPERATOR: YMH

DATE: 9/23/97

BAROMETRIC: 749
LEAK CHECK-START:
LEAK CHECK-END: 19:15 – inlet and outlet leak check

SAMPLE TIME	FILE NAME	PATH	LOCATION / NOTES	NUMBER SCANS	RES (cm-1)	CELL TEMP (F)	SPIKED/ UNSPIKED	SAMPLE COND.	SAMPLE FLOW	CELL PRESS.	BKG
		Process	Software								
17:21	1923033		Inlet	250	2	275	UN	dynamic	5.0 lpm	758	0923d
17:39	1923039		Stop								
		40 and 41	purge and fill Cell								
17:43	1923042		OUTLET	"	"	"	"	"	"	759	"
17:51	— Found Probe and Probe Box unplugged — Probe @ 125°C, Box @ 188°C										
			— only affects this outlet run —								
	1923047		Stop								
18:05	1923058		INLET	"	"	"	"	"	"	"	"
18:20	Process Restarted										
18:24	1923060		STOP								
	61 and 62	purge	and fill cell								
18:29	1923063		OUTLET	"	"	"	"	"	"	"	"
	18:45	Process	Down								
18:48	1923071		Stop	"	"	"	"	"	"	"	"
19:01	N2 0923E		N_2 only	"	"	"	"	"	"	"	"
19:10	Mix0923D		~~Toluene 15 ppm @ 1.0 lpm~~ Toluene Flow off	"	"	"	"	"	3.0 lpm	755	"
			SF_6 4 ppm, @ 2.0 lpm w/ formaldehyde @ 100°C								
19:20	KTS0923C		Ethylene 2 ppm	"	"	"	—	—	Static	754	"
19:24	Bkg0923E		N_2 Only	"	"	"	—	—	Static	754	—

Run

Sampling Data

PROJECT NO. 3804-25
PLANT: GM Powertrain Saginaw, MI
OPERATOR: JMH

DATE: 9/23/97

BAROMETRIC: AT 15:40 = 751mmHg
LEAK CHECK-START: OK 29.58
LEAK CHECK-END:

SAMPLE TIME	FILE NAME	PATH	LOCATION / NOTES	NUMBER SCANS	RES (cm-1)	CELL TEMP (F)	SPIKED/ UNSPIKED	SAMPLE COND.	SAMPLE FLOW	CELL PRESS.	BKG.
19:33	INAIR109		AIR from ~~from~~ Roof - Inlet	250	2	276	–	–	5.0 lpm	757	09238
19:46	OUTAIR107		AIR from Roof - Outlet	"	"	"	"	"	"	"	"

JH

Run #2 - Cupola

FTIR FIELD DATA FORM
Sampling Data

PROJECT NO. 3804 - 25
PLANT: Gm Saginaw, MI
OPERATOR: JMH

DATE: 9/24/97

BAROMETRIC: 752mmHg OR 29.60 in
LEAK CHECK-START: 8:05 - Inlet and Outlet
LEAK CHECK-END: 15:45 - inlet and outlet good

SAMPLE TIME	FILE NAME	PATH	LOCATION / NOTES	NUMBER SCANS	RES (cm-1)	CELL TEMP (F)	SPIKED/ UNSPIKED	SAMPLE COND.	SAMPLE FLOW	CELL PRESS.	BKG
		26 m									
7:46	N20924a		N_2 only direct to cell	250	2	275	-	dynamic	5.0 lpm	758	0923e
8:29	OUTSP201		Outlet - SPIKE	"	"	"	SP	"	4.0 lpm	758	0924a
			SF_6, 4ppm @ 2.0 lpm w/ Formaldehyde @ 100°C								
			~~and Toluene 196ppm @ 1.0 lpm~~ * Toluene Valve off *								
			Cell flow = 4.0 lpm								
			Vent flow = 2.0 lpm								
8:41	INLSP201		INLET - SPIKE Same Conditions as above	"	"	"	SP	"	4.0 lpm	759	0924a
Manual Sampling Started @ 8:51											
9:06	OUTUN202		OUTLET	250	2	275	UNSP	dynamic	3.0 lpm	760	0924a
9:08	Process	Down									
9:16	BKG0924b		Background	500	"	"	-	"	5.0 lpm	760	~
9:30	INLSP202		INLET SPIKE w/ Toluene	250	"	276	SP	"	4.0 lpm	758	0924b
			SF_6 4ppm @ 2.0 lpm w/ Formaldehyde @ 100°C								
			and Toluene 196ppm @ 1.0 lpm								
			Cell flow = 4.0 lpm, Vent flow = 2.0 lpm								
9:35 Manual Restart											
9:39	OUTSP203		Outlet SPIKE - Same as above	"	"	"	"	"	"	759	"

Start cell Spike
→ At 5.0 lpm
SF6 gas time in < 3.0 min

ONE DATA COLLECTION
250 scans = 2 min 8 sec

Run #2

FTIR FIELD DATA FORM
Sampling Data

PROJECT NO. 3804-25
PLANT: Gm Powertrain
OPERATOR: Jmlt

DATE: 9/24/97

BAROMETRIC: 752 mmHg
LEAK CHECK-START:
LEAK CHECK-END:

SAMPLE TIME	FILE NAME	PATH	LOCATION / NOTES	NUMBER SCANS	RES (cm-1)	CELL TEMP (F)	SPIKED/ UNSPIKED	SAMPLE COND.	SAMPLE FLOW	CELL PRESS.	BKG
9:48	OUTUN004		OUTLET	250	2	276	UN	dynamic	5.0 lpm	756	09246
	Process Software										
9:55	19240001		Inlet	250	2	276	UN	dynamic	5.0 lpm	759	09246
10:11	19240007		Stop								
	0008 and 0009		Purge and fill Cell								
10:17	19240010		OUTLET	250	2	276	UN	dynamic	5.0 lpm		09246
10:36	19240018		Stop								
	calibrate 0020 & 21		Purge and fill Cell								
10:43	19240022		INLET	"							"
10:58	19240028		Stop								
	29, 30 + 31		Purge and fill						- Method 23 -		
11:05	19240032		OUTLET	"		- Manual 11:18	Bot change 11:45				"
11:26	19240040		Stop								
	~~0041 and 0042~~		~~Purge and fill Cell~~								
11:31	BKg0924c		Background	500							—
	Restart	Process	Software								
11:49	19240061	Rename to 0081	Inlet	250	2	275	UN	dynamic	5.0 lpm	758	0924c
12:09	19240069	Rename to 0085	Stop								
12:13	19240012	Rename to 0062	OUTLET	250	2	276	UN	dynamic	5.0 lpm	756	0924c
12:35	19240021	Rename to 71	Stop								

FTIR FIELD DATA FORM

Sampling Data

PROJECT NO. 3604-25
PLANT: GM POWER SAGINAW, MI
OPERATOR: Smith

DATE: 9/24/97

BAROMETRIC: 752
LEAK CHECK-START:
LEAK CHECK-END:

SAMPLE TIME	FILE NAME	PATH	LOCATION / NOTES	NUMBER SCANS	RES (cm-1)	CELL TEMP (F)	SPIKED/ UNSPIKED	SAMPLE COND.	SAMPLE FLOW	CELL PRESS.	BKG
12:41	19240024	Rename to 0024	INLET	250	2	275	UN	dynamic	5.0 lpm	758	0924c
13:04	19240034	Rename to 0034	Stop								
13:15	N2092416		N_2 direct to Cell, only	250	"	"	"	"	"	"	"
		- NO	BAG #4 TESTED -								
13:20	SHK3_201		Shakeout #3 - Bag #5	250	2	276	UN	smlic	-	745	0924c
13:23	SHK3_202		"	"	"	"	"	"		"	"
13:27	SHK5_101		Shakeout #5 - Bag #6	"	"	"	"	"	-	"	"
13:33	19240001	Rename to 0101	OUTLET	250	2	276	UN	dynamic	5.0 lpm	756	0924c
13:49	19240007	Rename to 0107	Stop								
13:52	19240010	Rename to 0110	inlet	"	"	"	"	"	"	"	"
14:09	19240017	Rename to 0117	Stop								
14:21	INSP203		INLET - SPIKE	250	2	276	SP	dynamic	4.0 lpm	758	0924c
			SF_6 @ 2.0 lpm w/ Formaldehyde	@ 110°C							
			Toluene @ 1.0 lpm	≡ → 202,037		nanol/min					
			Cell flow = 4.0 lpm, Vent = 2.0 lpm								
14:33	OUTSP205		OUTLET - SPIKE	250	2	275	SP	"	4.0 lpm	758	0924c
			Same as Above								
14:46	OUTN2206		Nitrogen in Stack Line - Outlet	"	"	"	N_2	"	"	"	"
14:56	INLN2204		Nitrogen in Stack - Inlet	"	"	"	"	"	"	"	"

FTIR FIELD DATA FORM

Sampling Data

PROJECT NO. 3804-25
PLANT: GM Powertrain
OPERATOR: JMH

DATE: 9/24/97

BAROMETRIC: 752 mm Hg
LEAK CHECK-START:
LEAK CHECK-END:

SAMPLE TIME	FILE NAME	PATH	LOCATION / NOTES	NUMBER SCANS	RES (cm-1)	CELL TEMP (F)	SPIKED/ UNSPIKED	SAMPLE COND.	SAMPLE FLOW	CELL PRESS.	BKG
15:03	OUTLW201		OUTLET	250	2	275	unsp	dynamic	5.0	755	0924c
15:16	N20924c		N_2 direct to Cell	250	2	"	N_2	"	"	"	"
~15:23	BKg0924d		Background	500	"	"	—	"	"	"	—
15:30	COOLS101		Bay #7 - Cooling stack "S"	250	2	276	—	static	—	745	0924d
15:35	COOLS102		"	"	"	"	"	"	"	746	"

JMH

Run #3 - Cupola

FTIR FIELD DATA FORM

Sampling Data

PROJECT NO. 3804-25
PLANT: GM Powertrain Saginaw, MI
OPERATOR: JMH

DATE: 9/25/97

BAROMETRIC: 735 mmHg or 28.72 ...
LEAK CHECK-START: inlet and outlet go!
LEAK CHECK-END: @ 7:15a...

SAMPLE TIME	FILE NAME	PATH	LOCATION / NOTES	NUMBER SCANS	RES (cm-1)	CELL TEMP (F)	SPIKED/ UNSPIKED	SAMPLE COND.	SAMPLE FLOW	CELL PRESS.	BKG
7:59	OUTSP301		Outlet - Spike	250	2	275	SP	dynamic	4.0 lpm	742	0925a
			Sf6 4ppm @ 2.00 lpm w/ formaldehyde @ 110°C (one hundred ten)								
			and toluene 16ppm @ 1.0 lpm → (202,039 nanol/min)								
			Cell flow = 4.0 lpm, Vent flow = 2.0 lpm								
8:06	OUTN2302		outlet - Nitrogen Only in line	250	2	275	Nitrogen	dynamic	4.0 lpm	742	0925a
8:13	INLSP301		INLET - SPIKE	"	"	"	SP	"	"	"	"
			Same as above								
8:23	INLSP302		INLET - SPIKE	"	"	"	SP	"	5.0 lpm	"	"
			SPIKE Levels same as above								
			Cell Flow = 5.0 lpm								
			Vent Flow = 4.0 lpm								
8:31	INLN2303		Inlet - Nitrogen Only in sample line	250	2	"	Nitrogen	"	4.0 lpm		"
8:34	MANUAL RUN		Started								
	Pirecs Software										
8:54	19250001		OUTLET	250	2	276	UN	"	5.0 lpm	743	0925b
9:12	19250008		Stop								
9:16	19250011		INLET	250	2	276	UN	"	5.0 lpm	743	"
9:31	19250017		Stop								

Stopped program

Run #3 - Cupola

FTIR FIELD DATA FORM
Sampling Data

PROJECT NO. 3804-25
PLANT: GM Powertrain Saginaw, MI
OPERATOR: Smit

DATE: 9/25/97

BAROMETRIC: 735 mmHg
LEAK CHECK-START:
LEAK CHECK-END:

SAMPLE TIME	FILE NAME	PATH	LOCATION / NOTES	NUMBER SCANS	RES (cm-1)	CELL TEMP (F)	SPIKED/ UNSPIKED	SAMPLE COND.	SAMPLE FLOW	CELL PRESS.	BKG
9:41	19250018		OUTLET — Continuous Software Restarted	250	2	276	UN	dynamic	5.0lpm	713	0925b
10:00	19250026		Stop								
9:40 manid		inlet ports									
10:08	19250030		INLET	"	"	"	"	"	"	742	"
10:26	19250038		Stop								
10:30	19250041		OUTLET	"	"	"	"	"	"	745	"
10:49	19250049		Stop								
	~~BAG1~~		Nitrogen in a Bag								
11:01	N2BAG101		N_2 only in Bag - Nitrogen Blank	250	2	276	Nitrogen	static	—	736	0925c
11:07	COOLR101		Bag #9 - Cooling Stack "R"	250	2	275	—	"	—	733	"
11:11	COOLR102		"	"	"	"		"	—	733	"
11:17	19250050		INLET	250	2	276	UN	dynamic	5.0lpm	747	"
— 11:25 Process Down —											
11:32 Process UP and Running											
11:44	19250061		Stop								
11:48	19250064		OUTLET	"	"	"	"	"	"	"	"
12:05	19250071		Stop								
12:10	19250074		Inlet	"	"	"	"	"	"		"
12:26	19250081		Stop								

FTIR FIELD DATA FORM

Sampling Data

PROJECT NO. 3804-25
PLANT: GM Powertrain Saginaw, MI
OPERATOR: AMK

DATE: 9/25/97

BAROMETRIC: 735
LEAK CHECK-START:
LEAK CHECK-END:

SAMPLE TIME	FILE NAME	PATH	LOCATION / NOTES	NUMBER SCANS	RES (cm-1)	CELL TEMP (F)	SPIKED/ UNSPIKED	SAMPLE COND.	SAMPLE FLOW	CELL PRESS.	BKG
12:31	19250084	-	OUTLET	250	2	275	UN	dynamic	5.0 lpm	746	0925c
12:50	19250092		Stop								
12:55	19250095	-	Inlet	"	"	"	"	"	"	744	"
13:10	0101		Stop								
13:14	19250104	-	Outlet	"	"	"	"	"	"	745	"
13:29	19250110		Stop								
13:44	out0303	-	Diluted Outlet - outlet sample	"	"	"	diluted at manifold	dynamic	"	"	"
			diluted w/ N_2 at manifold								
			Sample = 2.5 lpm								
			N_2 = 2.5 lpm								
13:50	out0304	-	Diluted Outlet - same as above								
13:57	$N_2$0925c		N_2 to Cell								
14:00	Bkg0925d		Background	500							
14:07	COOLM101		BAG #10 · COOLING, main stack	250	2	275	—	Static	—	738	0925J
14:11	COOLM102		"	"	"	"	"	"	"	"	"
14:17	BACK101		BAG #8 - BACKGROUND Bag	"	"	"	"	"	"	733	"
			sampled inside facility on 1st floor								
			near the cooling main stack.								
14:20	Back102		"	"	"	"	"	"	"	"	"

FTIR FIELD DATA FORM

Sampling Data

PROJECT NO. 3804-05
PLANT: GM Powertrain Saginaw, MI
OPERATOR: JMH

DATE: 9/25/97

BAROMETRIC: 735mm Hg
LEAK CHECK-START:
LEAK CHECK-END:

SAMPLE TIME	FILE NAME	PATH	LOCATION / NOTES	NUMBER SCANS	RES (cm-1)	CELL TEMP (F)	SPIKED/ UNSPIKED	SAMPLE COND.	SAMPLE FLOW	CELL PRESS.	BKG
			INLET - SPIKE	250	2	276	SP	dynamic	5.0 lpm	746	09250
14:30	INLSP304		SF_6 4ppm @ 1.0 lpm w/ Formaldehyde @ 100°C ≈(94,000 nmol/min)								
			and toluene 18ppm @ 1.0 lpm								
			cell flow = 5.0 lpm, Vent = 2.0 lpm								
14:37	INLN2305		Inlet - Zero - N_2 only in sample line	"	"	"	nitrogen	"	"	745	"
14:46	OUTSP305		OUTLET - SPIKE	250	2	276	SP	dynamic	5.0 lpm	745	09250
			Same as above								
14:53	OUTN2306		Outlet - Zero - N_2 in sample line	"	"	"	nitrogen	"	"	"	"
15:11	19250112		OUTLET	250	2	275	UN	dynamic	5.0 lpm	745	"
15:27	19250118		Stop								
15:33	19250122		INLET	"	"	"	"	"	"	"	"
15:35	Process down										
15:43	process up										
15:55	Process down										
	19250132		Stop								
16:01	Process up										
16:03	19250136		OUTLET	"	"	"	"	"	"	747	"
16:16	19250141		Stop								
16:21	19250144		Inlet	"	"	"	"	"	"		"
16:37	19250150		Stop								

FTIR FIELD DATA FORM

Sampling Data

PROJECT NO. 3804-25
PLANT: GM Powertrain Saginaw, MI
OPERATOR: JMH

DATE: 9/25/97

BAROMETRIC: 735 mm Hg
LEAK CHECK-START: ✓
LEAK CHECK-END: Outlet - 16:59 pass

SAMPLE TIME	FILE NAME	PATH	LOCATION / NOTES	NUMBER SCANS	RES (cm-1)	CELL TEMP (F)	SPIKED/ UNSPIKED	SAMPLE COND.	SAMPLE FLOW	CELL PRESS.	BKG
16:46	19250157		OUTLET	250	2	276	UN	dynamic	5.0 lpm	746	0925d
16:54	19250158		Stop								
16:56	19250160		INLET	250	2	276	UN	"	"	744	"
16:58			— STOP —								
17:08	19250925d		N_2 direct to Cell	250	2	275	~~UN~~	"	"	747	"

Run #1

FTIR FIELD DATA FORM

Background and Calibration Spectra

PROJECT NO. 3804-25 **BAROMETRIC:** 749 mmHg or 29.41 in

PLANT: GMPOWER Saginaw, MICH **DATE:** 9/23/97 **OPERATOR:**

SAMPLE TIME	FILE NAME	PATH	LOCATION / NOTES	NUMBER SCANS	RES (cm-1)	CELL TEMP (F)	PRESSURE	BKG	APOD	NOTES
9:00	N2 0923a		N_2 only	250	2	275	760	0922a	Gain=4	
9:21	CELL LEAK		CHECK T=0 2.3 Torr	> 1 Torr	/87 sec					
			T=87 sec 3.3 Torr							
9:28	BKG0923a		Background, N_2 only	500	2	275	756	—		flowing - 5 lpm
9:37	ETS0923a		Ethylene, 20 ppm in Nitrogen	250	2	275	752	0923a		Static
9:43	ETS0923b		"	"	"	"	"	"		Static
9:50	SF6 0923a		SF_6 Direct to Cell - 4.01 ppm	"	"	"	"	"		"
9:57	Tol 0923a		Toluene Direct to Cell	"	"	"	"	"		"
			196.7 ppm in AIR							
10:10	FOR0923a		Formaldehyde Perm Tube	250	2	275	752	0923a		Static
			1000 lpm of N_2 @ 100° C							
			Direct to Cell → 94.087 nanoM/min							
10:38	FOR0923b		Formaldehyde - Same as above	"	"	"	"	"		Dynamic - 1 lpm
10:47	AIR0923a		INLET - AIR ONLY - from Roof	250	"	"	"	"		Dynamic - 5 lpm
11:07	AIR0923b		OUTLET - AIR ONLY	"	"	"	"	"		"
11:42	MIX0923b		Toluene 196.7 ppm @ 1 lpm	"	"	"	"	"		"
			Kinetic: SF_6 - 4 ppm @ 1.0 lpm							
			and form @ 100° C							
			Direct to Cell							

Run #2

FTIR FIELD DATA FORM

Background and Calibration Spectra

PROJECT NO. 3801.05 **BAROMETRIC:** 758mmHg or 27.61in

PLANT: GM Fower Saginaw, MI **DATE:** 9/24/97 **OPERATOR:** JMH

SAMPLE TIME	FILE NAME	PATH	LOCATION / NOTES	NUMBER SCANS	RES (cm-1)	CELL TEMP (F)	PRESSURE	BKG	APOD	NOTES
7:50	BKG0924a		Background, N_2 only	500	2	275	758			5 lpm flow
8:14	cts0924a		20ppm Ethylene in Nitrogen	250	2	275	757	0924a		
8:57	MIX0924a		SF_6 1ppm @ 2.00 lpm with formaldehyde @ 100°C	"	"	"	"	0924a		
			and Toluene 176ppm @ 1.0 lpm		→ 94,000 nanol/min					
9:00	LEAKCHECK		CELL T=0 3.7							
			T=60sec 4.3 / = 0.6 mmHg/60sec							
9:16	BKG0924b		N_2, Background	500	2	275	760	—		
11:31	BKG0924c		N_2, Background	500	2	275	758	—		
15:23	BKG0924d		N_2 Background	"	"	"	755			
15:47	cts0924b		20ppm ethylene	250	2	275		0924d		

Run H3 - Cupola

FTIR FIELD DATA FORM

Background and Calibration Spectra

PROJECT NO. 3804-25 **BAROMETRIC:** 735mmHg or 28.12in

PLANT: GM Powertrain Saginaw, MI **DATE:** 9/25/97 **OPERATOR:** JMH

SAMPLE TIME	FILE NAME	PATH	LOCATION / NOTES	NUMBER SCANS	RES (cm-1)	CELL TEMP (F)	PRESSURE	BKG	APOD	NOTES
7:29	N20925a		N_2 only, direct to Cell	250	2	275	742	0924e		
7:32	Bkg0925a		Background	500		275				5 lpm
7:42	cts0925a		Ethylene, 20ppm in Nitrogen	250	2	275	742	0925a		
7:47	cts0925b		"	"	"	"	"	"		
8:39	MIX0925a		SF_6 4ppm @ 2.0 lpm with formaldehyde @ 110°C (202,000 nmol/min)							
			and Toluene 196ppm @ 1.0 lpm	250	2	276	737	0925a		3.0 lpm
			Direct to Cell							
8:43	N20925b		N_2 only, direct to cell	250	2	276	747	"		5.0 lpm
8:48	Bkg0925b		Background - N_2 only	500	2	276		—		
10:54	Bkg0925c		Background - N_2 only	500		276	746	—		
13:58	N20925c		N_2 only to Cell	250	2	276	745	0925c		5.0 lpm
14:00	~~Bkg0925d~~		Background - N_2 only	500	2	276	745	—		
15:04	MIX0925b		SF_6 4ppm @ 1.0 lpm w/ formaldehyde @ 100°C - (14,000 nmol/min)					~~0925d~~		
			and Toluene 196ppm @ 1.0 lpm	250	2	276	741	0925d		
			Direct to Cell							
17:12	Bkg0925e		Background, N_2	500						

17:20 cts0925c ethylene, 20 ppm 0925e

B-3 FTIR FLOW AND TEMPERATURE READINGS

Run #1 - Cupola

Stack Temp
flows

FTIR FIELD DATA FORM

(Sampling Location Data)

PROJECT NO. 3841-25

BAROMETRIC: 749 mm Hg

PLANT: GMPower Sesinaw, MI

DATE: 9/23/97

OPERATOR: JMH

INLET

SAMPLE TIME	DELTA P IN. H2O	STACK TEMP.	PROBE TEMP.	FILTER TEMP.	
13:36	1.4	144	305	301	
14:41	0.61	145	303	303	
16:08	0.23	145	303	301	
16:37	0.49	126	301	304	
17:02	0.44	120	303	307	
17:51	0.88	118	303	302	
18:22	0.76	135	306	300	
		JH			

OUTLET

SAMPLE TIME	DELTA P IN. H2O	STACK TEMP.	PROBE TEMP.	FILTER TEMP.	
13:36	0.47	127	299	300	
14:41	0.26	128	302	300	
16:08	2.1	123	298	300	
16:38	1.3	106	299	299	
17:02	1.2	97	300	301	
17:51	0.60	96	125	188	
18:22	-0.0	114	299	290	
		JH			

Run #2 Cupola

FTIR FIELD DATA FORM

(Sampling Location Data)

PROJECT NO. 3804-25

BAROMETRIC: 752 mmHg

PLANT: GM Saginaw, MI

DATE: 9/24/97

OPERATOR: JMH

INLET

SAMPLE TIME	DELTA P IN. H2O	STACK TEMP.	PROBE TEMP.	FILTER TEMP.	Manifold Temp
8:54	0.0	153	303	299	
9:08	0.35	134	305	299	296
9:39	2.5	142	306	295	
10:23	0.89	143	306	283	
11:41	0.0	149	304	273	
12:21	0.15	144	302	285	300
14:15	0.26	147	303	292	

Line Temps

300 - 306

OUTLET

SAMPLE TIME	DELTA P IN. H2O	STACK TEMP.	PROBE TEMP.	FILTER TEMP.	
8:54	0.57	136	298	301	
9:08	0.58	121	299	300	
9:39	0.69	125	302	300	
10:23	0.43	128	301	300	
11:41	0.44	132	298	300	
12:21	0.55	129	297	300	
14:15	0.51	132	297	300	

Run #3 Cupola

FTIR FIELD DATA FORM

(Sampling Location Data)

PROJECT NO. 3804-25

BAROMETRIC: 735 mmHg

PLANT: GenPower Saginaw, MI

DATE: 9/25/97

OPERATOR: JMG

INLET

SAMPLE TIME	DELTA P IN. H2O	STACK TEMP.	PROBE TEMP.	FILTER TEMP.	Manifold temp
8:44	4.5	145	303	268	
9:20	0.94	147	307	273	
10:07	1.1	146	303	287	
11:20	0.75	145	303	303	
Blow	Back Pitots				
11:26	1.5	129	305	301	
11:43	0.95	144	308	301	
12:19	1.1	147	304	302	300
13:06	0.36	151	303	302	
13:34	0.60	153	305	302	
15:12	Blowback Pitots				
15:15	1.1	153	304	302	
16:46	Blowback Pitots				
16:47	1.1	152	306	298	

OUTLET

SAMPLE TIME	DELTA P IN. H2O	STACK TEMP.	PROBE TEMP.	FILTER TEMP.	
8:44	0.16	106	297	301	
9:20	0.46	106	297	300	
10:07	0.03	107	300	299	
11:20	0.03	107	296	300	
Blow	back Pitots				
11:25	0.49	102	301	300	
11:43	0.38	106	298	300	
12:19	0.0	108	297	300	
Blow	back Pitots				
12:22	0.41	108	298	300	
13:06	0.45	111	299	300	
13:34	0.42	112	298	300	
15:14	Blowback Pitots				
15:15	0.40	110	299	301	
	Blowback Pitots				
16:47	0.34	107	300	301	

B-4 HYDROCARBON REFERENCE SPECTRA

Reference Spectra of Hydrocarbon Compounds

The purpose of measuring reference spectra of some hydrocarbon compounds was to aid the analyses of FTIR sample spectra from iron and steel foundries and from integrated iron and steel plants. Four facilities were tested at these sources. At each facility hydrocarbon compounds were detected in the emissions. Because the EPA library of FTIR reference spectra contains only spectra of hazardous air pollutant (HAP) compounds, only quantitative reference spectra of hexane and isooctane were available to analyze the sample hydrocarbon emissions. As a result the hydrocarbon emissions were represented primarily by "hexane" in the draft report results. Many hydrocarbon compounds have infrared spectra which are similar to that of hexane in the spectral region near 2900 cm^{-1}. MRI selected nine candidate hydrocarbon compounds and measured their reference spectra in the laboratory. In addition MRI measured new high-temperature reference spectra of hexane and isooctane. The new reference spectra of these 11 compounds were included in revised analyses of the sample spectra. The FTIR results presented in the revised test reports show the measured concentrations of the detected hydrocarbons and also show revised concentrations of hexane and toluene. The hexane concentrations, in particular, are generally lower because the infrared absorbance from the hydrocarbon emissions is partly measured by the new reference spectra. As an example, figure B-1 illustrates the similarities among a sample spectrum and reference spectra of hexane and n-heptane.

MRI prepared a laboratory plan specifying the procedures for measuring the reference spectra. The EPA-approved laboratory plan is included in this appendix. The data sheets, check lists and other documentation are also included. During the measurements some minor changes were made to the laboratory plan procedures. These changes don't affect the data quality, but did allow the measurements to be completed in less time. This was necessary because the plan review process was more length than anticipated.

The following changes were to the procedures. The spectra were measured at 1.0 cm^{-1} resolution, which was the highest resolution of the sample spectra. It was unnecessary to use a heated line connection between the mass flow meter and the gas cell because the gas temperature in the cell was maintained without the heated line. Leak checks were conducted at positive pressure only because all of the laboratory measurements were conducted at ambient pressure. The reference spectra, CTS spectra, and background spectra will be provided on a disk with a separate reference spectrum report.

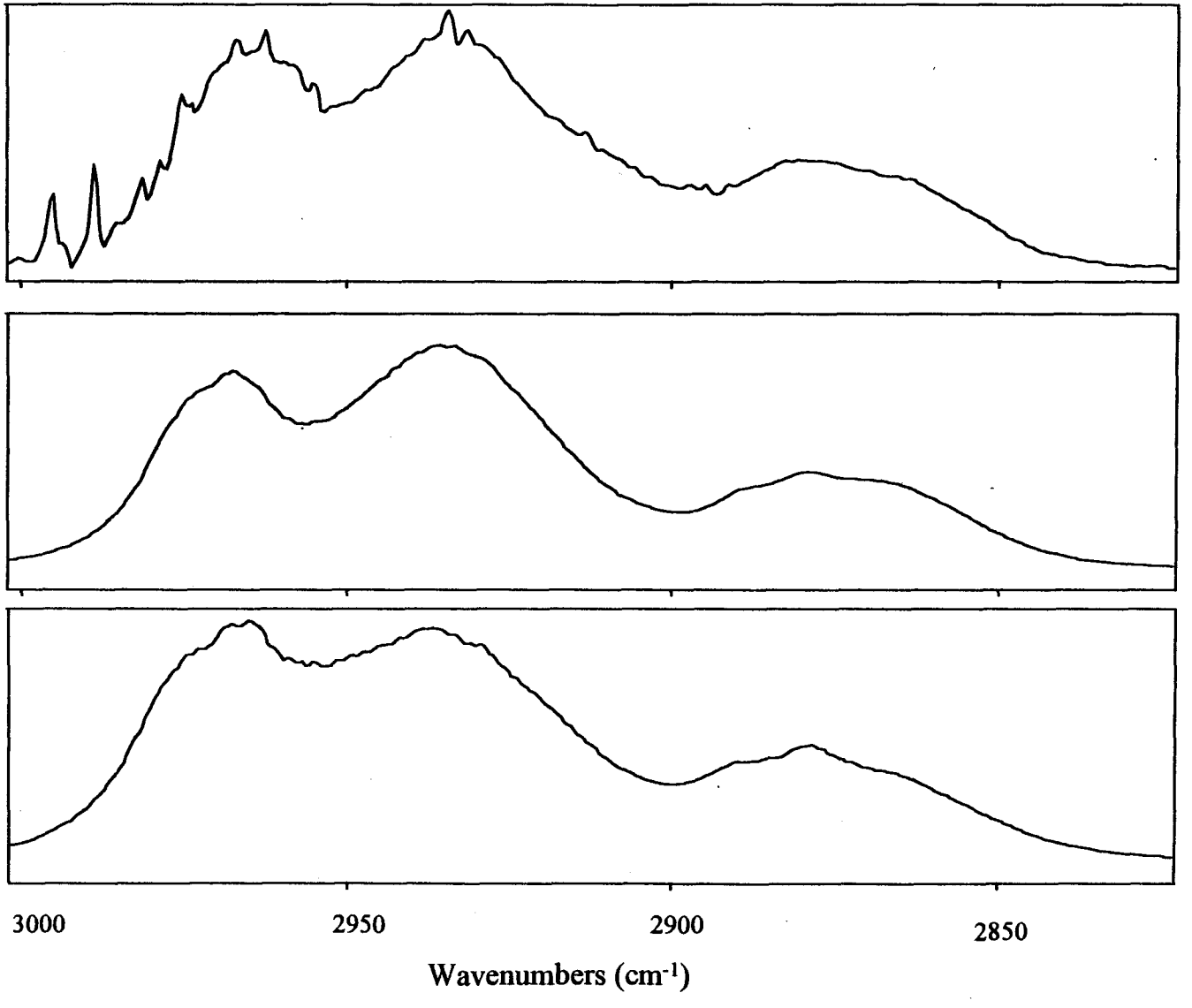

Figure B-1. Top trace, example sample spectrum; middle trace, n-heptane reference spectrum; bottom trace, n-hexane reference Spectrum.

LABORATORY PLAN FOR REFERENCE SPECTRUM MEASUREMENTS

DRAFT

Prepared for

Office of Air Quality Planning and Standards
Emissions, Monitoring and Analysis Division
Emission Measurement Center (MD-19)
Research Triangle Park, North Carolina 27711
Mr. Michael Ciolek
Work Assignment Manager

EPA Contract No. 68-D-98-027
Work Assignment 2-12 and 2-13
MRI Project No. 4951-12 and 4951-13

June 14, 1999

MIDWEST RESEARCH INSTITUTE 5520 Dillard Road, Suite 100, Cary, NC 27511-9232 • (919) 851-8181

TABLE OF CONTENTS

Page

1.0 INTRODUCTION 1
1.1 Objective 1
1.2 Background 2

2.0 TECHNICAL APPROACH 2
2.1 Measurement System 2
2.2 Procedure 3

3.0 QUALITY ASSURANCE AND QUALITY CONTROL 5
3.1 Spectra Archiving 5
3.2 CTS Spectra 6
3.3 Sample Pressure 6
3.4 Sample Temperature 6
3.5 Spectra 6
3.6 Cell Path Length 6
3.7 Reporting 6
3.8 Documentation 7

FIGURE AND TABLE LIST

Figure 1. Measurement system configuration 4

TABLE 1. ORGANIC COMPOUNDS SELECTED FOR THE LABORATORY STUDY 3

Laboratory Plan For Reference Spectrum Measurements
EPA Contract No. 68-D-98-027, Work Assignments 2-12 and 2-13
MRI Work Assignments 4951-12 and 4951-13

1.0 INTRODUCTION

In 1997 Midwest Research Institute (MRI) completed FTIR field tests at two iron and steel sintering facilities and at two iron and steel foundries. The tests were completed under EPA Contract No. 68-D2-0165, work assignments 4-20 and 4-25 for the sintering plants and foundries, respectively. The draft test reports were completed in 1998 under EPA Contract No. 68-W6-0048, work assignment 2-08, tasks 11 and 08 for the sintering plants and foundries, respectively.

Results from the data analyses indicated that the emissions from some locations included a mixture of hydrocarbon compounds, one of which was hexane. The EPA spectral library of FTIR reference spectra is comprised primarily of hazardous air pollutants (HAPs) identified in Title III of the 1990 Clean Air Act Amendments and, therefore, contains a limited number of aliphatic hydrocarbon compounds. MRI will measure reference spectra of some additional organic compounds that may have been part of the sample mixtures. The new reference spectra will be used in revised analyses of the sample spectra. The revised analyses will provide a better measure of the non-hexane sample components and, therefore, more accurate hexane measurements.

A Quality Assurance Project Plan (QAPP) was submitted for each source under EPA Contract No. 68-D2-0165, work assignments 4-20 and 4-25. When the QAPPs were prepared it was not anticipated that laboratory measurements would be required. This document describes the laboratory procedures and is an addition to the QAPPs.

This document outlines the technical approach and specifies the laboratory procedures that will be followed to measure the FTIR reference spectra. Electronic copies of the new reference spectra will be submitted to EPA with corresponding documentation. The laboratory procedures are consistent with EPA's Protocol for the Use of Extractive Fourier Transform Infrared (FTIR) Spectrometry for the Analyses of Gaseous Emissions From Stationary Sources, revised 1996.

1.1 Objective

The objective is to obtain accurate hexane measurements from FTIR spectra recorded at field tests at iron and steel sintering plants and at steel foundry plants. The approach is to measure reference spectra of some organic compounds that are not included in the EPA reference spectrum library and then use these new reference spectra in revised analyses of the field test spectra. The revised analyses will provide better discrimination of the hexane component from the absorbance bands of the organic mixture.

1.2 Background

Spectra of samples measured at the field test sites contained infrared absorbance features that may be due to a mixture of non-aromatic organic compounds. The samples were measured using quantitative reference spectra in the EPA library and the hexane reference spectra provided the best model for the observed absorbance features. The EPA library contains a limited number of reference spectra, primarily HAPs, listed in Title III of the 1990 Clean Air Act Amendments, which includes hexane. To obtain accurate measurements of target components it is helpful to use reference spectra of all compounds in the sample gas mixture. In this case it was decided to measure reference spectra of some additional organic compounds, which are similar in structure and have spectral features similar to hexane. The revised analyses will measure the sample absorbance in the 2900 cm^{-1} region using a combination of the hexane and new reference spectra. The revised analyses should provide more accurate hexane measurements, by measuring the non-hexane sample components more accurately.

2.0 TECHNICAL APPROACH

The analytical region used to measure hexane lies near 2900 cm^{-1}. Other aliphatic hydrocarbons with structures similar to hexane exhibit similar absorbance band shapes in this region. MRI viewed spectra of aliphatic organic compounds to identify some likely components of the sample spectra. Table 1 identifies the compounds that were selected for reference spectrum measurements. Cylinder standards of the selected compounds will be purchased from a commercial gas supplier. The standards will be about 50 ppm of the analyte in a balance of nitrogen. The cylinders will contain gravimetric standards (analytical accuracy of ±1 percent) in a balance of nitrogen.

2.1 Measurement System

A controlled, measured flow of the gas standard will be directed from the cylinder to the infrared gas cell. The gas cell is a CIC Photonics Pathfinder. This is a variable path White cell with an adjustable path length from 0.4 to 10 meters. The path lengths have been verified by measurements of ethylene spectra compared to ethylene spectra in the EPA FTIR spectral library. The inner cell surface is nickel coated alloy to minimize reactions of corrosive compounds with the cell surfaces. The cell windows are ZnSe. The cell is heat-wrapped and insulated. Temperature controllers and digital readout are used to control and monitor the cell temperature in two heating zones. The gas temperature inside the cell will be recorded using a T-type thermocouple temperature probe inserted through a 1/4 in. Swagelok fitting. The gas temperature will be maintained at about 120°C. Documentation of the temperature probe and thermometer calibration will be provided with the report.

TABLE 1. ORGANIC COMPOUNDS SELECTED FOR THE LABORATORY STUDY

Compound Name	Boiling Point (°C)
n–hexane[a]	69
n-heptane	98.4
Pentane	36.1
isooctane[a]	99.2
1-pentene	30
2-methyl,1-pentene	60.7
2-methyl,2-butene	38.6
2-methyl,2-pentene	67.3
3-methylpentane	63.3
Butane	-0.5

[a] Hexane and isooctane are HAPs. Their reference spectra will be re-measured because the reference spectra in the EPA library were measured at ambient temperature.

The instrument is an Analect Instruments (Orbital Sciences) RFX-65 optical bench equipped with a mercury-cadmium-telluride (MCT) detector. The RFX-65 instrument is capable of measuring spectra at 0.125 cm^{-1} resolution. The reference spectra will be measured at 0.25 cm^{-1} or 0.50 cm^{-1} resolution. Gas pressure in the sample cell will be measured using an Edwards barocell pressure sensor equipped with an Edwards model 1570 digital readout. A record of the pressure sensor calibration will be provided with the report.

A continuous flow of the gas standard will be maintained through the cell as the spectra are recorded. A mass flow meter will be used to monitor the gas flow (Sierra Instruments, Inc., model No. 822S-L-2-OK1-PV1-V1-A1, 0 to 5 liters per minute).

The instrument system will be configured to measure 0.25 cm^{-1} or 0.50 cm^{-1} resolution spectra. The measurement configuration is shown in Figure 1. Calibration transfer standards (CTS) will be measured each day before any reference spectra are measured and after reference spectra measurements are completed for the day.

2.2 Procedure

Information will be recorded in a laboratory notebook. Additionally, the instrument operator will use check lists to document that all procedures are completed. There will be three checklists for: (1) daily startup prior to any reference measurements, (2) reference spectrum measurements, and (3) daily shut down after reference measurements are completed. Example checklists are at the end of this document.

The information recorded in the laboratory notebook includes; the cell temperature, ambient pressure, background, CTS and spectrum file names, sample temperatures and pressures for each measurement, cell path length settings, number of background and sample scans, instrument

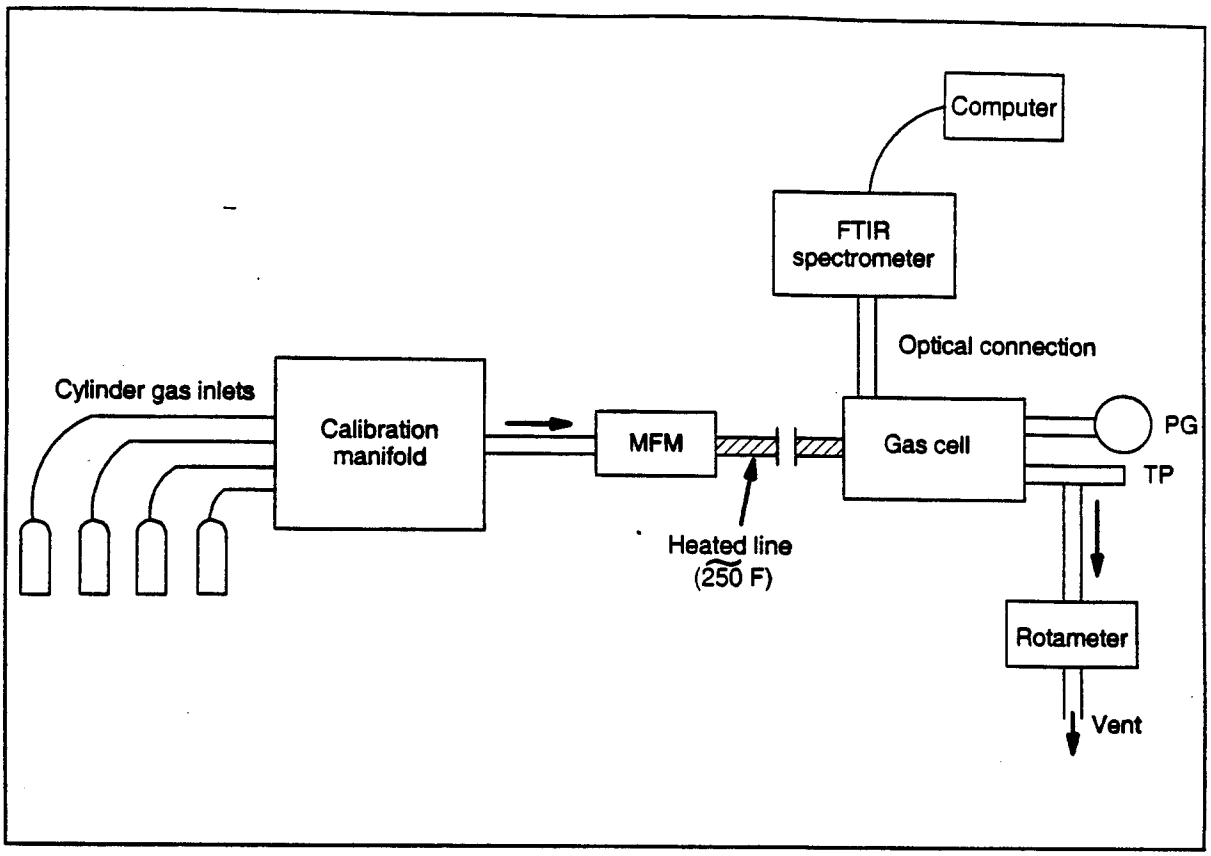

Figure 1. Measurement system configuration.
PG = pressure gauge; TP = temperature probe; MFM = mass flow meter.

resolution, gas standard concentration, sample cylinder identification, and sample flow rates for each measurement. Certificates of Analysis for all gas standards used in the project will be provided with the report.

The MCT detector will be cooled with liquid nitrogen and allowed to stabilize before measurements begin.

The cell will be filled with dry nitrogen and vented to ambient pressure. The pressure, in torr, will be recorded from the digital barocell readout. The cell will then be evacuated and leak checked under vacuum to verify that the vacuum pressure leak, or out-gassing, is no greater than 4 percent of the cell volume within a 1-minute period. The cell will then be filled with nitrogen and a background will be recorded as the cell is continuously purged with dry nitrogen. After the background spectrum is completed the cell will be evacuated and filled with the CTS gas. The CTS spectrum will be recorded as the cell is continuously purged with the CTS gas standard. The purge flow rates will be 0.5 to 1.0 LPM (liters per minute) as measured by the mass flow meter.

After the background and CTS measurements are completed the cell will be filled with a reference gas sample. The reference spectra will be recorded as the cell is continuously purged at 0.5 to 1.0 LPM with gas standard. The gas flow will be monitored with a mass flow meter before the gas enters a heated line, and with a rotameter after the gas exits the cell. The mass flow meter is calibrated for nitrogen in the range 0 to 5 LPM. The purpose of the heated line connection is to help maintain the gas temperature inside the cell. This may only require placing a heat wrap on the line where the gas enters the cell.

The gas temperature of each nitrogen background, CTS, and reference gas will be recorded as its spectrum is collected.

Several preliminary spectra will be recorded to verify that the in-cell gas concentration has stabilized. Stabilization usually occurs within 5 minutes after the gas is first introduced into the cell with the measurement system that will be used for this project. Duplicate (or more) reference spectra will be collected for each flowing sample. The second reference spectrum will be recorded at least 5 minutes after the first spectrum is completed while the continuous gas flow is maintained.

At least 100 scans will be co-added for all background, CTS , and reference interferograms.

A new background single beam spectrum will be recorded for each new compound or more frequently if the absorbance base line deviates by more than ±0.02 absorbance units from zero absorbance in the analytical region.

After reference spectrum measurements are completed each day, the background and CTS measurements will be repeated.

The CTS gas will be an ethylene gas standard, either 30 or 100ppm in nitrogen (±1 percent) or methane (about 50 ppm in nitrogen, ±1 percent). The methane CTS may be particularly suitable for the analytical region near 2900 cm^{-1}.

3.0 QUALITY ASSURANCE AND QUALITY CONTROL

The following procedures will be followed to assure data quality.

3.1 Spectra Archiving

Two copies of all recorded spectra will be stored, one copy on the computer hard drive and a second copy on an external storage medium. The raw interferograms will be stored in addition to the absorbance spectra. After the data are collected, the absorbance spectra will be converted to Grams (Galactic Industries) spectral format. The spectra will be reviewed by a second analyst and all of the spectra, including the Grams versions will be provided with a report and documentation of the reference spectra.

3.2 CTS Spectra

The CTS spectra will provide a record of the instrument stability over the entire project. The precision of the CTS absorbance response will be analyzed and reported. All of the CTS spectra will be archived with the background and reference spectra.

3.3 Sample Pressure

The barocell gauge calibration will be NIST traceable and will be documented in the reference spectrum report. The ambient pressure will be recorded daily and all of the samples will be maintained near ambient pressure within the IR gas cell.

3.4 Sample Temperature

The IR gas cell is equipped with a heating jacket and temperature controllers. The temperature controller readings will be recorded whenever spectra are recorded. Additionally, the temperature of each gas sample will be measured as its spectrum is collected using a calibrated temperature probe and digital thermometer. The calibration record will be provided with the reference spectrum report. The gas sample will be preheated before entering the cell by passing through a heated 20 ft. Teflon line. The Teflon line temperature will be maintained at about 120°C. The line temperature controllers will be adjusted to keep the gas sample temperature near 120°C.

3.5 Spectra

MRI will record parameters used to collect each interferogram and to generate each absorbance spectrum. These parameters include: spectral resolution, number of background and sample scans, cell path length, and apodization. The documentation will be sufficient to allow an independent analyst to reproduce the reference absorbance spectra from the raw interferograms.

3.6 Cell Path Length

The cell path length for various settings is provided by the manufacturer's documentation. The path length will be verified by comparing ethylene CTS spectra to ethylene CTS spectra in the EPA spectral library.

3.7 Reporting

A report will be prepared that describes the reference spectrum procedures. The report will include documentation of the laboratory activities, copies of data sheets and check lists, and an electronic copy of all spectra and interferograms.

3.8 Documentation

Laboratory analysts will use three check lists to document data recording activities. The check lists are appended to this plan. The checklists: (1) record start up activities such as instrument settings, background and CTS spectra, (2) record reference spectra activities, and (3) record daily shut down procedures, including post-reference spectra background and CTS measurements.

In addition to the check lists the operator will record notations in a laboratory notebook. Copies of the check lists and note book pages will be provided with the reference spectrum report.

A draft of the reference spectrum report will be provided with the revised test reports. The reference spectrum report will then be finalized and submitted separately.

Project No. _____

MIDWEST RESEARCH INSTITUTE
DAILY CHECKLIST
Start up Procedure

DATE: _____ OPERATOR: _____

			Initials
Check cell temperature			_____
Verify temperature using thermocouple probe and hand-held readout			_____
Purge cell with dry nitrogen and vent to ambient pressure			_____
Record ambient pressure in cell, (P_b)			_____
Vacuum Leak Check Procedure:			
Evacuate cell to baseline pressure.			_____
Isolate cell (close cell inlet and cell outlet)			_____
Record time and baseline pressure (P_{min})	_____ Time	_____ P_{min}	_____
Leave cell isolated for one minute			
Record time and cell pressure (P_{max})	_____ Time	_____ P_{max}	_____
Calculate "leak rate" for 1 minute			
$\Delta P = P_{min} - P_{max}$		_____ ΔP	_____
Calculate "leak rate" as percentage of total pressure			
$\% V_L = (\Delta P/P_b) * 100$		_____ $\% V_L$	_____
$\lvert \% V_L \rvert$ should be < 4			

Record Nitrogen Background	
Purge cell with dry nitrogen	_____
Verify cell is as dry as previous background	_____
Record ambient pressure using cell Barocell gauge	_____
Record nitrogen flow rate (about sampling flow rate)	_____
Collect Background (AQBK) under continuous flow and ambient pressure	_____
Record information in data book.	_____
Copy Background to C-drive and backup using batch file.	_____

Record CTS Spectrum	
Record Cell path length setting	
Evacuate Cell	_____
Fill Cell with CTS gas	_____
Open cell outlet and purge cell with CTS at sampling rate (1 to 5 LPM)	_____
Record cylinder ID Number	_____
Record CTS gas cylinder identity and concentration	_____
Record and copy spectrum and interferogram to C-drive and back up using CTS batch file.	_____
Record Barytron pressure during collect	_____
Record information on "Background and Calibrations" data sheet.	_____
Verify that spectrum and interferogram were copied to directories.	_____
Record CTS Spectrum File Name	_____

Reviewed by: _____ Date: _____

Project No. _____

MIDWEST RESEARCH INSTITUTE
FTIR Reference Spectrum Checklist

DATE: _____ OPERATOR: _____

	Initials
Reference Spectrum Sample	
Start Time	_____
Record Cell path length setting	_____
Record Background Spectrum File Name	_____
Record CTS Spectrum File Name	_____
Record Compound Name	_____
Record Cylinder Identification Number	_____
Record Cylinder Concentration	_____
Record Spectrum File Name	_____
Fill cell to ambient pressure with gas from cylinder standard	_____
Open cell outlet vent valve	_____
Adjust sample flow through cell to 0.5 to 1 LPM. Record flow rate	_____
Allow to equilibrate for 5 minutes	_____
Record sample pressure in cell	_____
Record sample flow rate through cell	_____
Start spectrum collect program	_____
Record information in data book	_____
Copy Spectrum and Interferogram to backup directories	_____
End Time	_____

Reviewed by: _____ Date: _____

Project No. _____

MIDWEST RESEARCH INSTITUTE
DAILY CHECKLIST
Shut Down Procedure

DATE: _____ OPERATOR: _____

	Initials
Purge sample from cell using ambient air or nitrogen	_____
Record Nitrogen Background	_____
Purge cell with dry nitrogen	_____
Verify cell is as dry as previous background	_____
Record ambient pressure using cell Barocell gauge	_____
Record nitrogen flow rate (about sampling flow rate)	_____
Collect Background (**AQBK**) under continuous flow and ambient pressure	_____
Record information in data book.	_____
Copy Background to C-drive and backup using batch file.	_____
Record CTS Spectrum	
Evacuate Cell	_____
Fill Cell with CTS gas	_____
Open cell outlet and purge cell with CTS at sampling rate (1 to 5 LPM)	_____
Record cylinder ID Number	_____
Record CTS gas cylinder identity and concentration	_____
Record and copy spectrum and interferogram to C-drive and back up using CTS batch file.	_____
Record Barytron pressure during collect	_____
Record information on "Background and Calibrations" data sheet.	_____
Verify that spectrum and interferogram were copied to directories.	_____
Record CTS Spectrum File Name	_____
Close cylinders	_____
Evacuate or Purge CTS from cell using nitrogen	_____
Leave cell under low nitrogen purge or under vacuum	_____
Fill MCT detector dewar	_____

Reviewed by: _____ Date: _____

SHIPPING ORDER

MIDWEST RESEARCH INSTITUTE

425 Volker Boulevard, Kansas City, Missouri 64110

☐ TRANSFER ☐ RETURN FOR CREDIT

☐ EXCHANGE ☐ RETURN FOR REPAIR

144099

REFER TO THIS NO. IN ALL CORRESPONDENCE

TO Midwest Research Institute
5520 DILLARD ROAD
SUITE 100
Cary NC 27511-9232

DATE 5-10-99

VIA			INSURE: ☐ YES ☐ NO
Best Way	☐ A.M. ☐ P.M.	☐ PREPAID ☐ COLLECT	AMOUNT
REQUESTED BY	Charge No. 041 or Bill Recipient Acct. No.		REFERENCE
Dave Upton			

QUANTITY	DESCRIPTION OF MATERIAL	PRESENT LOCATIO
1	Barocel pressure transducer	
1	Edwards Indicator	
1	HH21 Omega Indicator	
1	Type T thermocouple	

SIGNED Dave Upton

Victor

PACKING SLIP

MRI 11 (Rev. 8/92)

Attachment 1
Instrument Found Out of Tolerance

Instrument: 1570 indicator with W60041111 Capacitance manometer

Manufacturer: Edwards

MRI Number: ~~N/A~~ FR 3U Y-6472 & Y-6473

Serial Number: 4237 & 86412159

Acceptance Criteria: MFG Accuracy

Date of calibration or test that revealed the out of tolerance condition: 5-6-99

Date of previous calibration: UNKNOWN

Responsible person: Tom Geyer (Must receive a copy of this report)

Tested/Calibrated by: Dave Upton Date: 5-6-99

Reviewed by: [signature] Date: 5/6/1999

Unit read 7.9 to 9.7 torr high. Adjusted to mfg tolerance.

I hereby certify that I have received a copy of this report and will notify the appropriate people and take the appropriate actions necessary to determine what data may have been corrupted and what corrective actions are indicated.

Signed: [signature] (Responsible person)

Date: 5/14/99

Attachment 1
Pressure Gauge Calibration Data Sheet

MRI No. ~~N/A~~ Y-6472 & Y-6473 Model No. / Type 1570 with W60041111 Serial No. 4237 S/N 80412159
Report No.

Noun barocel pressure indicator Ambient Temperature 73°F Ambient Humidity 41%

Applied Pressure	Initial Check	Final Check	Tolerance ±	Pass	Fail
500 TORR	507.9 TORR	500.5 TORR	1.2 TORR	✓	
600 TORR	608.3 TORR	600.2 TORR	1.4 TORR	✓	
700 TORR	708.6 TORR	699.9 TORR	1.5 TORR	✓	
750 TORR	758.7 TORR	749.8 TORR	1.6 TORR	✓	
800 TORR	808.8 TORR	799.7 TORR	1.7 TORR	✓	
900 TORR	909.2 TORR	899.4 TORR	1.9 TORR	✓	
1000 TORR	1009.7 TORR	999.3 TORR	2.1 TORR	✓	

Cumulative uncertainties of the standards used to perform this calibration did not exceed the requirements of MRI-0701 and ISO 10012-1.

Standards Used: MRI No.	Date Calibrated	Date Due Calibration
Y-6413	1-22-99	1-22-00

Notes/Adjustments/Repairs/Modifications:
Transducer total accuracy specifications: 0.15% Rdg (accuracy) + 0.01% FS (repeatability) + 0.005% FS (zero temp coef) + 0.02% Rdg (span temp coef). Indicator total accuracy: 0.005% RDG + 2 counts. Total system accuracy above.
adjusted indicator zero + fullscale and transducer zero

Limitations for use:
Not calibrated below 500 TORR

Date Calibrated: 5-6-99 Date Due Recalibration: 5-6-00 Cal Interval: 12 Month

Calibration Performed by: Dave Cotton Date: 5-6-99

Reviewed by: [signature] Date: 5/6/1999

Attachment
Calibration Data Sheet

MRI No.: — Model No./Type: TTSS-18G-12 Serial No.: T99130 Report No.: —

Noun: "T" Thermocouple Ambient Temperature: 74° F Ambient Humidity: 31%

Applied temperature	Initial check		Final check	Tolerance ±	Pass	Fail
°C	mv.	calculated °C	Same	°C		
-25.0	-0.9237	-24.5	Same	1.0	✓	
0.0	0.0059	0.2	Same	1.0	✓	
100.0	4.2749	99.9	Same	1.0	✓	
150.0	6.7043	150.0	Same	1.1	✓	
200.0	9.2911	200.1	Same	1.5	✓	
300.0	14.8765	300.3	Same	2.2	✓	
400.0	20.8913	400.3	Same	3.0		

Cumulative uncertainties of the standards used to perform this calibration did not exceed the requirements of MRI-0701 and ISO 10012-1.

Standards used: MRI No.	Date calibrated	Date due calibration
Y-5835	12-4-98	12-4-99
012601	5-26-98	5-26-99
012600	4-23-99	4-23-00
012693	1-7-99	1-7-00

Notes/Adjustments/Repairs/Modifications:
N/A

Limitations for use:
N/A

Date Calibrated: 5-7-99 Date Due Recalibration: 5-7-00 Cal Interval: 1 Year

Calibration Performed by: Dave Cotton Date: 5-7-99

Reviewed by: [signature] Date: 5-10-99

Attachment
Calibration Data Sheet

MRI No.: Y-6474 Model No./Type: HH21 Serial No.: T-206821 Report No.: —

Noun: Thermocouple Thermometer Ambient Temperature: 74° F Ambient Humidity: 28°

Applied temperature	Initial check	Final check	Tolerance ±	Pass	Fail
"T" -200°C	-200.4°C	Same	0.8°C	✓	
"T" -100°C	-100.3°C		0.7°C	✓	
"T" 0°C	-0.2°C		0.6°C	✓	
"T" 100°C	99.7°C		0.7°C	✓	
"T" 150°C	149.7°C		0.75°C	✓	
"T" 200°C	199.6°C		0.8°C	✓	
"T" 300°C	299.7°C		0.9°C	✓	
"T" 400°C	399.7°C	Same	1.0°C	✓	

Cumulative uncertainties of the standards used to perform this calibration did not exceed the requirements of MRI-0701 and ISO 10012-1.

Standards used: MRI No.	Date calibrated	Date due calibration
Y-5835	12-4-98	12-4-99

Notes/Adjustments/Repairs/Modifications:
NONE

Limitations for use:
Type T thermocouples only

Date Calibrated: 5-7-99 Date Due Recalibration: 5-7-00 Cal Interval: 1 Year

Calibration Performed by: Dan Upton Date: 5-7-99

Reviewed by: [illegible] Date: 5-10-99

Scott Specialty Gases

Shipped From: 6141 EASTON ROAD, BLDG 1 PO BOX 310
PLUMSTEADVILLE PA 18949-0310
Phone: 215-766-8861 Fax: 215-766-2070

CERTIFICATE OF ANALYSIS

MIDWEST RESEARCH
SCOTT KLAMM
425 VOLKER BLVD

KANSAS CITY MO 64110

PROJECT #: 01-01788-006
PO#: 033452
ITEM #: 01021951 5AL
DATE: 3/31/98

CYLINDER #: ALM025384 ANALYTICAL ACCURACY: +/-5%
FILL PRESSURE: 2000 PSIG

BLEND TYPE : CERTIFIED WORKING STD

COMPONENT	REQUESTED GAS CONC MOLES		ANALYSIS (MOLES)	
ETHYLENE	20.	PPM	20.0	PPM
NITROGEN		BALANCE		BALANCE

ANALYST: Genya Rogut
GENYA ROGUT

Scott Specialty Gases

Shipped From: 1750 EAST CLUB BLVD
DURHAM NC 27704
Phone: 919-220-0803 Fax: 919-220-0808

CERTIFICATE OF ANALYSIS

MIDWEST RESEARCH

CROSSROADS CORP PARK
5520 DILLARD RD,SUITE 100
CARY NC 27511

PROJECT #: 12-34162-005
PO#: 038546
ITEM #: 12022751 1AL
DATE: 5/26/99

CYLINDER #: ALM046483
FILL PRESSURE: 2000 PSIG

ANALYTICAL ACCURACY: +-1%
PRODUCT EXPIRATION: 5/26/2000

BLEND TYPE : GRAVIMETRIC MASTER GAS

COMPONENT	REQUESTED GAS CONC MOLES		ANALYSIS (MOLES)	
METHANE	50.	PPM	52.6	PPM
NITROGEN		BALANCE		BALANCE

NIST TRACEABLE BY WEIGHT

ANALYST: B.M. BECTON

Scott Specialty Gases

Shipped From: 1750 EAST CLUB BLVD
DURHAM NC 27704
Phone: 919-220-0803 Fax: 919-220-0808

CERTIFICATE OF ANALYSIS

MIDWEST RESEARCH

CROSSROADS CORP PARK
5520 DILLARD RD,SUITE 100
CARY NC 27511

PROJECT #: 12-34162-004
PO#: 038546
ITEM #: 12022232 1AL
DATE: 5/25/99

CYLINDER #: ALM045092
FILL PRESSURE: 2000 PSIG

ANALYTICAL ACCURACY: +-1%
PRODUCT EXPIRATION: 5/25/2000

BLEND TYPE : GRAVIMETRIC MASTER GAS

COMPONENT	REQUESTED GAS CONC MOLES		ANALYSIS (MOLES)	
N-HEXANE	50.	PPM	49.6	PPM
NITROGEN		BALANCE		BALANCE

NIST TRACEABLE BY WEIGHT

ANALYST: L. TAYLOR

Scott Specialty Gases

Shipped From: 1750 EAST CLUB BLVD
DURHAM NC 27704
Phone: 919-220-0803 Fax: 919-220-0808

CERTIFICATE OF ANALYSIS

MIDWEST RESEARCH

CROSSROADS CORP PARK
5520 DILLARD RD,SUITE 100
CARY NC 27511

PROJECT #: 12-34167-006
PO#: 038545
ITEM #: 1202M2034951AL
DATE: 5/27/99

CYLINDER #: ALM037409
FILL PRESSURE: 2000 PSIG

ANALYTICAL ACCURACY: +-1%
PRODUCT EXPIRATION: 5/27/2000

BLEND TYPE : GRAVIMETRIC MASTER GAS

COMPONENT	REQUESTED GAS CONC MOLES		ANALYSIS (MOLES)	
3-METHYLPENTANE	50.	PPM	50.0	PPM
NITROGEN		BALANCE		BALANCE

NIST TRACEABLE BY WEIGHT

ANALYST: L. TAYLOR

Scott Specialty Gases

Shipped From: 1750 EAST CLUB BLVD
DURHAM NC 27704
Phone: 919-220-0803 Fax: 919-220-0808

CERTIFICATE OF ANALYSIS

MIDWEST RESEARCH

CROSSROADS CORP PARK
5520 DILLARD RD,SUITE 100
CARY NC 27511

PROJECT #: 12-34162-006
PO#: 038546
ITEM #: 1202P2000801AL
DATE: 5/27/99

CYLINDER #: ALM041358
FILL PRESSURE: 2000 PSIG

ANALYTICAL ACCURACY: +-1%
PRODUCT EXPIRATION: 5/27/2000

BLEND TYPE : GRAVIMETRIC MASTER GAS

COMPONENT	REQUESTED GAS CONC MOLES		ANALYSIS (MOLES)	
N-PENTANE	50.	PPM	49.99	PPM
NITROGEN		BALANCE		BALANCE

NIST TRACEABLE BY WEIGHT

ANALYST: L. TAYLOR

Scott Specialty Gases

Shipped From: 1750 EAST CLUB BLVD
DURHAM NC 27704
Phone: 919-220-0803 Fax: 919-220-0808

CERTIFICATE OF ANALYSIS

MIDWEST RESEARCH

CROSSROADS CORP PARK
5520 DILLARD RD,SUITE 100
CARY NC 27511

PROJECT #: 12-34167-005
PO#: 038545
ITEM #: 1202M2034941AL
DATE: 5/26/99

CYLINDER #: ALM054078
FILL PRESSURE: 2000 PSIG

ANALYTICAL ACCURACY: +-1%
PRODUCT EXPIRATION: 5/26/2000

BLEND TYPE : GRAVIMETRIC MASTER GAS

COMPONENT	REQUESTED GAS CONC MOLES		ANALYSIS (MOLES)	
2-METHYL-2-PENTENE	50.	PPM	51.4	PPM
NITROGEN		BALANCE		BALANCE

NIST TRACEABLE BY WEIGHT

ANALYST: B.M. BECTON

Scott Specialty Gases

Shipped From: 1750 EAST CLUB BLVD
DURHAM NC 27704
Phone: 919-220-0803 Fax: 919-220-0808

CERTIFICATE OF ANALYSIS

MIDWEST RESEARCH

CROSSROADS CORP PARK
5520 DILLARD RD,SUITE 100
CARY NC 27511

PROJECT #: 12-34167-004
PO#: 038545
ITEM #: 1202M2034961AL
DATE: 5/26/99

CYLINDER #: ALM005876
FILL PRESSURE: 2000 PSIG

ANALYTICAL ACCURACY: +-1%
PRODUCT EXPIRATION: 5/26/2000

BLEND TYPE : GRAVIMETRIC MASTER GAS

COMPONENT	REQUESTED GAS CONC MOLES		ANALYSIS (MOLES)	
2-METHYL 2-BUTENE	50.	PPM	50.04	PPM
NITROGEN		BALANCE		BALANCE

NIST TRACEABLE BY WEIGHT

ANALYST: L. TAYLOR

Scott Specialty Gases

Shipped From: 1750 EAST CLUB BLVD
DURHAM NC 27704
Phone: 919-220-0803 Fax: 919-220-0808

CERTIFICATE OF ANALYSIS

MIDWEST RESEARCH

CROSSROADS CORP PARK
5520 DILLARD RD,SUITE 100
CARY NC 27511

PROJECT #: 12-34167-003
PO#: 038545
ITEM #: 1202M2034971AL
DATE: 5/26/99

CYLINDER #: ALM017936
FILL PRESSURE: 2000 PSIG

ANALYTICAL ACCURACY: +-1%
PRODUCT EXPIRATION: 5/26/2000

BLEND TYPE : GRAVIMETRIC MASTER GAS

COMPONENT	REQUESTED GAS CONC MOLES		ANALYSIS (MOLES)	
2-METHYL-1-PENTENE	50.	PPM	50.08	PPM
NITROGEN		BALANCE		BALANCE

NIST TRACEABLE BY WEIGHT

ANALYST: L. TAYLOR

Scott Specialty Gases

Shipped From: 1750 EAST CLUB BLVD
DURHAM NC 27704
Phone: 919-220-0803 Fax: 919-220-0808

CERTIFICATE OF ANALYSIS

MIDWEST RESEARCH

CROSSROADS CORP PARK
5520 DILLARD RD,SUITE 100
CARY NC 27511

PROJECT #: 12-34162-003
PO#: 038546
ITEM #: 1202N2007311AL
DATE: 5/26/99

CYLINDER #: AAL21337
FILL PRESSURE: 2000 PSIG

ANALYTICAL ACCURACY: +-1%
PRODUCT EXPIRATION: 5/26/2000

BLEND TYPE : GRAVIMETRIC MASTER GAS

COMPONENT	REQUESTED GAS CONC MOLES		ANALYSIS (MOLES)	
N-HEPTANE	50.	PPM	49.97	PPM
NITROGEN		BALANCE		BALANCE

NIST TRACEABLE BY WEIGHT

ANALYST: L. TAYLOR

Scott Specialty Gases

Shipped From: 1750 EAST CLUB BLVD
DURHAM NC 27704
Phone: 919-220-0803 Fax: 919-220-0808

CERTIFICATE OF ANALYSIS

MIDWEST RESEARCH

CROSSROADS CORP PARK
5520 DILLARD RD,SUITE 100
CARY NC 27511

PROJECT #: 12-34167-002
PO#: 038545
ITEM #: 1202P2019421AL
DATE: 5/27/99

CYLINDER #: ALM041929
FILL PRESSURE: 2000 PSIG

ANALYTICAL ACCURACY: +-1%
PRODUCT EXPIRATION: 5/27/2000

BLEND TYPE : GRAVIMETRIC MASTER GAS

COMPONENT	REQUESTED GAS CONC MOLES		ANALYSIS (MOLES)	
1-PENTENE	50.	PPM	50.1	PPM
NITROGEN		BALANCE		BALANCE

NIST TRACEABLE BY WEIGHT

ANALYST: B.M. BECTON

Scott Specialty Gases

Shipped From: 1750 EAST CLUB BLVD
DURHAM NC 27704
Phone: 919-220-0803 Fax: 919-220-0808

CERTIFICATE OF ANALYSIS

MIDWEST RESEARCH

CROSSROADS CORP PARK
5520 DILLARD RD,SUITE 100
CARY NC 27511

PROJECT #: 12-34162-001
PO#: 038546
ITEM #: 12021152 1AL
DATE: 5/25/99

CYLINDER #: ALM020217
FILL PRESSURE: 2000 PSIG

ANALYTICAL ACCURACY: +-1%
PRODUCT EXPIRATION: 5/25/2000

BLEND TYPE : GRAVIMETRIC MASTER GAS

COMPONENT	REQUESTED GAS CONC MOLES		ANALYSIS (MOLES)	
N-BUTANE	50.	PPM	51.3	PPM
NITROGEN		BALANCE		BALANCE

NIST TRACEABLE BY WEIGHT

ANALYST: B.M. Becton
B.M. BECTON

Project No. 4951-12, 13

MIDWEST RESEARCH INSTITUTE
DAILY CHECKLIST
Start up Procedure

DATE: 7-7-99

OPERATOR: Geyer

			Initials
Check cell temperature			
Verify temperature using thermocouple probe and hand-held readout			23.8 °C
Purge cell with dry nitrogen and vent to ambient pressure			JG
Record ambient pressure in cell, (P_b)			749.9 torr
~~Vacuum~~ **Leak Check Procedure:** (positive Pressure)			JG
Evacuate cell to baseline pressure.			
Isolate cell (close cell inlet and cell outlet)			
Record time and baseline pressure (P_{min})	11:07:45 Time	775.4 P_{min}	JG
Leave cell isolated for one minute			
Record time and cell pressure (P_{max})	11:06:45 Time	775.7 P_{max}	JG
Calculate "leak rate" for 1 minute			
$\Delta P = P_{min} - P_{max}$		0.3 ΔP	JG
Calculate "leak rate" as percentage of total pressure			
$\% V_L = (\Delta P/P_b) * 100$		1.16% $\% V_L$	JG
$\lvert \% V_L \rvert$ should be < 4			

(of difference between P_{max} and $P_{ambient}$)

Record Nitrogen Background	
Purge cell with dry nitrogen	JG
Verify cell is as dry as previous background	JG
Record ambient pressure using cell Barocell gauge	749.9
Record nitrogen flow rate (about sampling flow rate)	0.8 LPM (751.5 torr)
Collect Background (AQBK) under continuous flow and ambient pressure	0.8 LPM JG
Record information in data book.	JG
Copy Background to C-drive and backup using batch file.	JG BK60707A

Record CTS Spectrum	
Record Cell path length setting	
Purge ~~Evacuate Cell~~	10.03 JG
Fill Cell with CTS gas	11:23 JG
Open cell outlet and purge cell with CTS at sampling rate (1 to 5 LPM)	1.0 LPM
Record cylinder ID Number	AB 18472
Record CTS gas cylinder identity and concentration	Ethylene in N_2 (104.4 ppm)
Record and copy spectrum and interferogram to C-drive and back up using CTS batch file.	
Record Barytron pressure during collect	751.8
~~Record information on "Background and Calibrations" data sheet.~~ JG	
Verify that spectrum and interferogram were copied to directories.	JG
Record CTS Spectrum File Name	CTS0707A

Reviewed by: [signature]

Date: 7/7/99

Project No. 4951-12, 13

MIDWEST RESEARCH INSTITUTE
DAILY CHECKLIST
Start up Procedure

DATE: 7/7/99

OPERATOR: T. Bayer

			Initials
Check cell temperature			
Verify temperature using thermocouple probe and hand-held readout			
Purge cell with dry nitrogen and vent to ambient pressure			
Record ambient pressure in cell, (P_b)			
Vacuum Leak Check Procedure:			
Evacuate cell to baseline pressure.			
Isolate cell (close cell inlet and cell outlet)			
Record time and baseline pressure (P_{min})			
Leave cell isolated for one minute	Time	P_{min}	
Record time and cell pressure (P_{max})			
Calculate "leak rate" for 1 minute	Time	P_{max}	
$\Delta P = P_{min} - P_{max}$			
Calculate "leak rate" as percentage of total pressure		ΔP	
$\% V_L = (\Delta P/P_b) * 100$			
$\lvert \% V_L \rvert$ should be < 4		$\% V_L$	

Record Nitrogen Background	
Purge cell with dry nitrogen	
Verify cell is as dry as previous background	
Record ambient pressure using cell Barocell gauge	
Record nitrogen flow rate (about sampling flow rate)	
Collect Background (AQBK) under continuous flow and ambient pressure	
Record information in data book.	
Copy Background to C-drive and backup using batch file.	BK60707A

Record CTS Spectrum	
Record Cell path length setting	10.03
Purge **Evacuate Cell**	
Fill Cell with CTS gas	
Open cell outlet and purge cell with CTS at sampling rate (1 to 5 LPM)	1.0 LPM
Record cylinder ID Number	ALM025384
Record CTS gas cylinder identity and concentration	20.0 ppm Ethylene
Record and copy spectrum and interferogram to C-drive and back up using CTS batch file.	
Record Barytron pressure during collect	~~752.0~~ 751.8
~~Record information on "Background and Calibrations" data sheet.~~	
Verify that spectrum and interferogram were copied to directories.	
Record CTS Spectrum File Name	CTS0707B

Reviewed by: [signature] Date: 7/7/99

Project No. 4951-12,13

MIDWEST RESEARCH INSTITUTE
DAILY CHECKLIST
Start up Procedure

DATE: 7-8-99

OPERATOR: T. Geyer

			Initials
Check cell temperature			24.0 °C
Verify temperature using thermocouple probe and hand-held readout			n/a
Purge cell with dry nitrogen and vent to ambient pressure			
Record ambient pressure in cell, (P_b)			750.5 torr
~~Vacuum~~ Leak Check Procedure:			
Positive Pressure — ~~Evacuate~~ Purge cell to ~~baseline~~ maximum pressure.			JG
Isolate cell (close cell inlet and cell outlet)			JG
Record time and baseline pressure (P_{min})	10:36:10 (Time)	779.0 (P_{min})	JG
Leave cell isolated for one minute			JG
Record time and cell pressure (P_{max})	10:35:10 (Time)	779.3 (P_{max})	JG
Calculate "leak rate" for 1 minute			
$\Delta P = P_{min} - P_{max}$		0.3 (ΔP)	JG
Calculate "leak rate" as percentage of total pressure			
$\% V_L = (\Delta P/P_b) * 100$		1.04 ($\% V_L$)	JG
$\lvert \% V_L \rvert$ should be < 4			

% of $P_{max} - P_{ambient}$

Record Nitrogen Background

Purge cell with dry nitrogen	n/a
Verify cell is as dry as previous background	n/a
Record ambient pressure using cell Barocell gauge	750.5
Record nitrogen flow rate (about sampling flow rate)	0.47 LPM
Collect Background (AQBK) under continuous flow and ambient pressure	JG
Record information in data book.	JG
Copy Background to C-drive and backup using batch file.	JG

Record CTS Spectrum

Record Cell path length setting	
~~Evacuate~~ Purge **Cell**	10.03
Fill Cell with CTS gas	JG
Open cell outlet and purge cell with CTS at sampling rate (1 to 5 LPM)	JG
Record cylinder ID Number	ALM025384
Record CTS gas cylinder identity and concentration	20 ppm Ethylene
Record and copy spectrum and interferogram to C-drive and back up using CTS batch file.	JG
Record Barytron pressure during collect	752.7 @ 0.90
Record information on "Background and Calibrations" data sheet.	JG
Verify that spectrum and interferogram were copied to directories.	JG
Record CTS Spectrum File Name	CS0708A

Reviewed by: [signature]

Date: 7/8/99

Project No. 4951 - 12, 13

MIDWEST RESEARCH INSTITUTE
DAILY CHECKLIST
Start up Procedure

DATE: 7/9/99

OPERATOR: J. Geyer

			Initials
Check ~~cell~~ gas in cell temperature			
Verify temperature using thermocouple probe and hand-held readout			JG
Purge cell with dry nitrogen and vent to ambient pressure			126.6 °C
Record ambient pressure in cell, (P_b)			751.4 torr
~~Vacuum~~ Leak Check Procedure:			
Positive Pressure Purge ~~Evacuate~~ Vent cell ~~to~~ ambient ~~baseline~~ pressure.			
Isolate cell (close cell inlet and cell outlet)			JG
Record time and baseline pressure (P_{min})	11:08:30 (JG) Time	770.8 P_{min}	JG
Leave cell isolated for one minute			
Record time and cell pressure (P_{max}) start	11:09:30 (JG) Time	771.5 P_{max}	JG
Calculate "leak rate" for 1 minute			
$\Delta P = P_{min} - P_{max}$		0.7 ΔP	JG
Calculate "leak rate" as percentage of total pressure			
$\% V_L = (\Delta P/P_b) * 100$		3.5 $\% V_L$	JG
$\lvert \% V_L \rvert$ should be < 4			

% of P_{max} - $P_{ambient}$

Record Nitrogen Background

Purge cell with dry nitrogen	JG
Verify cell is as dry as previous background	JG
Record ambient pressure using cell Barocell gauge	JG
Record nitrogen flow rate (about sampling flow rate)	0.49 LPM
Collect Background (AQBK) under continuous flow and ambient pressure	JG
Record information in data book.	JG
Copy Background to C-drive and backup using batch file.	JG

Record CTS Spectrum

Record Cell path length setting	10.03
Purge ~~Evacuate~~ Cell	JG
Fill Cell with CTS gas	JG
Open cell outlet and purge cell with CTS at sampling rate (1 to 5 LPM)	JG
Record cylinder ID Number	ALM025384
Record CTS gas cylinder identity and concentration	20.0 ppm Methane
Record and copy spectrum and interferogram to C-drive and back up using CTS batch file.	JG
Record Barytron pressure during collect	JG
Record information on "Background and Calibrations" data sheet.	JG
Verify that spectrum and interferogram were copied to directories.	
Record CTS Spectrum File Name	CTS0709A

Reviewed by: J Geyer

Date: 7/9/99

Project No. 4951-12, 17

MIDWEST RESEARCH INSTITUTE
DAILY CHECKLIST
Start up Procedure

DATE: 7/12/99

OPERATOR: T. Gayes

			Initials
Check cell temperature			
Verify temperature using thermocouple probe and hand-held readout			126.5°C TG
Purge cell with dry nitrogen and vent to ambient pressure			TG
Record ambient pressure in cell, (P_b)			753.3 torr
~~Vacuum~~ Leak Check Procedure:			TG
Pressure ~~Evacuate~~ Purge cell to ~~baseline~~ Nitrogen pressure.			
Isolate cell (close cell inlet and cell outlet)			TG
Record time and baseline pressure (P_{min})	8:52:30	773.3	TG
Leave cell isolated for one minute	Time	P_{min}	TG
Record time and cell pressure (P_{max})	8:51:30	774.0	TG
Calculate "leak rate" for 1 minute	Time	P_{max}	TG
$\Delta P = P_{min} - P_{max}$		0.70	TG
Calculate "leak rate" as percentage of total pressure		ΔP	
$\% V_L = (\Delta P/P_b) * 100$		3.4 %	TG
$\lvert \% V_L \rvert$ should be < 4		$\% V_L$	

% of $P_{max} - P_{ambient}$

Record Nitrogen Background	
Purge cell with dry nitrogen	1.1 LPM
Verify cell is as dry as previous background	TG
Record ambient pressure using cell Barocell gauge	753.3
Record nitrogen flow rate (about sampling flow rate)	1.1 LPM
Collect Background (AQBK) under continuous flow and ambient pressure	TG
Record information in data book.	TG
Copy Background to C-drive and backup using batch file.	TG

Record CTS Spectrum	
Record Cell path length setting	10.03 TG
~~Evacuate~~ Cell	—
Fill Cell with CTS gas	TG
Open cell outlet and purge cell with CTS at sampling rate (1 to 5 LPM)	TG 1.17 LPM
Record cylinder ID Number	ALM025384
Record CTS gas cylinder identity and concentration	20.0 ppm Ethylene
Record and copy spectrum and interferogram to C-drive and back up using CTS batch file.	TG
Record Barytron pressure during collect	756.1
Record information on "Background and Calibrations" data sheet.	TG
Verify that spectrum and interferogram were copied to directories.	TG
Record CTS Spectrum File Name	C150712A

Reviewed by: Thomas J. Gayes

Date: 7/12/99

Project No. 4951-12,13

MIDWEST RESEARCH INSTITUTE
DAILY CHECKLIST
Start up Procedure

DATE: 7/13/99

OPERATOR: T. Geyer

			Initials
Check cell temperature			126.4 °C
Verify temperature using thermocouple probe and hand-held readout			752.9 torr
Purge cell with dry nitrogen and vent to ambient pressure			
Record ambient pressure in cell, (P_b)			752.9 torr
~~**Vacuum Leak Check Procedure:**~~ overpressure			
Pressure ~~Evacuate~~ cell to baseline pressure.			
Isolate cell (close cell inlet and cell outlet)			
Record time and baseline pressure (P_{min})	10:42:03 Time	771.4 P_{min}	
Leave cell isolated for one minute			
Record time and cell pressure (P_{max})	10:41:03 Time	771.8 P_{max}	
Calculate "leak rate" for 1 minute			
$\Delta P = P_{min} - P_{max}$		0.4 ΔP	
Calculate "leak rate" as percentage of total pressure			
$\% V_L = (\Delta P/P_b) * 100$		2.1 $\% V_L$	
$\lvert \% V_L \rvert$ should be < 4			

% of $P_{max} - P_{ambient}$

Record Nitrogen Background	
Purge cell with dry nitrogen	
Verify cell is as dry as previous background	
Record ambient pressure using cell Barocell gauge	
Record nitrogen flow rate (about sampling flow rate)	
Collect Background (AQBK) under continuous flow and ambient pressure	
Record information in data book.	
Copy Background to C-drive and backup using batch file.	

Record CTS Spectrum	
Record Cell path length setting	
Ref ~~Evacuate~~ Cell	10.03 s/6
Fill Cell with CTS gas	
Open cell outlet and purge cell with CTS at sampling rate (1 to 5 LPM)	
Record cylinder ID Number	ALM025384
Record CTS gas cylinder identity and concentration	20.0 ppm ethylene
Record and copy spectrum and interferogram to C-drive and back up using CTS batch file.	
Record Barytron pressure during collect	
Record information on "Background and Calibrations" data sheet.	
Verify that spectrum and interferogram were copied to directories.	
Record CTS Spectrum File Name	CTS0713A

Reviewed by: [signature] Date: 7/15/99

Project No. 4951-12, 13

MIDWEST RESEARCH INSTITUTE
DAILY CHECKLIST
Start up Procedure

DATE: 7/15/99

OPERATOR: T. Geyer

			Initials
Check cell temperature			
Verify temperature using thermocouple probe and hand-held readout			TG
Purge cell with dry nitrogen and vent to ambient pressure			125.6
Record ambient pressure in cell, (P_b)			TG
Vacuum Leak Check Procedure:			754.8 torr
Purge ~~Evacuate~~ cell to baseline pressure. (P_{min})			TG
Isolate cell (close cell inlet and cell outlet)			TG
Record time and baseline pressure (P_{min})	11:28:15 Time	774.4 P_{min}	TG
Leave cell isolated for one minute			TG
Record time and cell pressure (P_{max})	11:27:05 Time	774.8 P_{max}	TG
Calculate "leak rate" for 1 minute			
$\Delta P = P_{min} - P_{max}$		0.4 ΔP	TG
Calculate "leak rate" as percentage of total pressure			
$\% V_L = (\Delta P/P_b) * 100$		2.0% $\% V_L$	TG
$\lvert \% V_L \rvert$ should be < 4			

% of $P_{max} - P_{ambient}$

Record Nitrogen Background	
Purge cell with dry nitrogen	TG
Verify cell is as dry as previous background	TG
Record ambient pressure using cell Barocell gauge	754.8 TG
Record nitrogen flow rate (about sampling flow rate)	1.03 LPM
Collect Background (AQBK) under continuous flow and ambient pressure	TG
Record information in data book.	TG
Copy Background to C-drive and backup using batch file.	TG

Record CTS Spectrum	
Record Cell path length setting	
Purge ~~Evacuate~~ Cell	10.03
Fill Cell with CTS gas	TG
Open cell outlet and purge cell with CTS at sampling rate (1 to 5 LPM)	TG
Record cylinder ID Number	AL-M-25738
Record CTS gas cylinder identity and concentration	20.0 ppm ethylene
Record and copy spectrum and interferogram to C-drive and back up using CTS batch file.	TG
Record Barytron pressure during collect	757.1
Record information on "Background and Calibrations" data sheet.	TG
Verify that spectrum and interferogram were copied to directories.	TG
Record CTS Spectrum File Name	CT0715A

Reviewed by: TG

Date: 7/16/99

Project No. 4951-12, 13

MIDWEST RESEARCH INSTITUTE
DAILY CHECKLIST
Start up Procedure

DATE: 7/6/99

OPERATOR: T. Gayer

			Initials
Check cell temperature			
Verify temperature using thermocouple probe and hand-held readout			TJG
Purge cell with dry nitrogen and vent to ambient pressure			125.3 °C
Record ambient pressure in cell, (P_b)			TJG
Vacuum Leak Check Procedure:			755.2
Purge ~~Evacuate~~ cell to ~~baseline~~ P_{max} pressure.			TJG
Isolate cell (close cell inlet and cell outlet)			TJG
Record time and baseline pressure (P_{min})	9:52:40 (Time)	778.5 torr (P_{min})	TJG
Leave cell isolated for one minute			TJG
Record time and cell pressure (P_{max})	9:51:40 (Time)	779.2 (P_{max})	TJG
Calculate "leak rate" for 1 minute			
$\Delta P = P_{min} - P_{max}$		0.7 (ΔP)	TJG
Calculate "leak rate" as percentage of total pressure			
$\% V_L = (\Delta P/P_b) * 100$		2.9 ($\% V_L$)	TJG
$\lvert \% V_L \rvert$ should be < 4		% of P_{max} - $P_{ambient}$	
Record Nitrogen Background			
Purge cell with dry nitrogen			TJG
Verify cell is as dry as previous background			TJG
Record ambient pressure using cell Barocell gauge			TJG 755.2
Record nitrogen flow rate (about sampling flow rate)			0.98 LPM
Collect Background (AQBK) under continuous flow and ambient pressure			TJG
Record information in data book.			TJG
Copy Background to C-drive and backup using batch file.			TJG
Record CTS Spectrum			
Record Cell path length setting			
Purge ~~Evacuate~~ **Cell**			10 m
Fill Cell with CTS gas			TJG
Open cell outlet and purge cell with CTS at sampling rate (1 to 5 LPM)			TJG
Record cylinder ID Number			ALM015384
Record CTS gas cylinder identity and concentration			20.0 ppm
Record and copy spectrum and interferogram to C-drive and back up using CTS batch file.			TJG
Record Barytron pressure during collect			757.1
Record information on "Background and Calibrations" data sheet.			TJG
Verify that spectrum and interferogram were copied to directories.			TJG
Record CTS Spectrum File Name			CTS0716A

Reviewed by: TJG

Date: 7/16/99

FTIR DATA FORM

Background and Calibration Spectra

PROJECT NO. 4951-12 and 13 **BAROMETRIC:** 749.9 torr

SITE: NCO Laboratory **DATE:** 7/7/99 **OPERATOR:** T. Geyer

TIME	FILE NAME	(Dial) PATH	NOTES	NUMBER SCANS	Resolution (cm-1)	Gas TEMP (F)	Gas PRESSURE	BKG	APOD
10:47	BKG0707A	10.03	N_2 through cell @ 0.8 LPM	500	1.0	23.8	751.5	—	NB/Med
11:37	CTS0707A	"	104.4 ppm Ethylene @ 1.0 LPM	500	1.0	23.8	751.8	707A	"
12:45	CTS0707B	"	20.0 ppm Ethylene 1.0 LPM	500	1.0	23.8	751.8	707A	"
~~13:31~~	~~BKG0707B~~	~~5.07~~	~~N_2 @ 0.8 LPM~~	~~500~~	~~1.0~~	~~23.5~~	~~751.2~~	~~—~~	~~"~~
1345	CTS0707C	10.03	20.0 ppm Ethylene @ 1.0 LPM	500	1.0	23.5	751.7	707A	NB/Med

Did not do

emc_back\fy99\4951\12\refs\ftir data sheets for references.xls
07-07-99

Reviewed by [signature]
Date 7-7-99

FTIR DATA FORM

Background and Calibration Spectra

PROJECT NO. 4951-12 and 13 **BAROMETRIC:** 750.5

SITE: NCO Laboratory **DATE:** 7/8/99 **OPERATOR:** T. Geyer

TIME	FILE NAME	(Dial) PATH	NOTES	NUMBER SCANS	Resolution (cm-1)	Gas TEMP (F)	Gas PRESSURE	BKG	APOD
10:40	BKG0708A	10.03	N_2 through cell @ 0.47 LPM after realign.	500	1.0	24.0	751.3	—	NB/mod
11:32	CTS0708A	10.03	20.0 ppm Ethylene @ 0.90 LPM	500	1.0	23.8	752.7	708A	"
16:05	BKG0708B	10.03	N_2 @ 0.50 LPM GAIN is now 2R for same signal as cold cell (~70%). Did not realign after heating	500	1.0	126.5°C	749.9	—	NB/mod
16:26	CTS0708B	10.03	Ethylene @ 0.97 LPM 20.0 ppm	500	1.0	126.4°C	750.8	708B	NB/mod

Ambient = 749.0

emc_back\fy99\4951\12\refs\ftir data sheets for references.xls
07-07-99

Reviewed by [signature]
Date 7/8/99

FTIR DATA FORM

Background and Calibration Spectra

PROJECT NO. 4951-12 and 13 **BAROMETRIC:** 751.4

SITE: NCO Laboratory **DATE:** 7/9/99 **OPERATOR:** T. Geyer

TIME	FILE NAME	(Dial) PATH	NOTES	NUMBER SCANS	Resolution (cm-1)	Gas TEMP (F)	Gas PRESSURE	BKG	APOD
13:13	BKG0709A	10.03	N_2 @ 0.99 LPM	500	1.0	126.2	751.3	—	~~and~~/Hard
13:44	CTS0709A	10.03	20 ppm ethylene @ 0.89 ~~1.41~~ LPM	500	1.0	126.3	752.0	A	"
14:14	1960709A	10.03	52.6 ppm methane in N_2 @ 1.69 ~~0.99~~ LPM ALM46483	500	1.0	126.3	752.2	A	"
14:27	1960709B	10.03	52.6 ppm methane in N_2 @ 1.10 LPM ALM46483	500	1.0	126.3	752.1	A	"
14:55	BKG0709B	10.03	N2 @ ~~0.45~~ LPM 0.90	500	1.0	126.3	751.3 ~~750.4~~	~~A~~	"
16:03	CTS0709B	10.03	20.0 ppm ethylene @ 0.93 LPM	500	1.0	126.1	751.0	B	"
16:25	1960709~~B~~ C 1/16	10.03	52.6 ppm methane in N_2 @ 1.11 LPM ALM46483	500	1.0	126.1	751.3	B	"
16:39	1960709D	10.03	52.6 ppm methane @ 1.10 LPM	500	1.0	126.1	751.2	B	"

emc_back\fy99\4951\12\refs\ftir data sheets for references.xls
07-07-99

Reviewed by [signature]
Date 7/9/99

FTIR DATA FORM

Background and Calibration Spectra

PROJECT NO. 4951-12 and 13 **BAROMETRIC:** 753.3

SITE: NCO Laboratory **DATE:** 7/12/99 **OPERATOR:** T. Geyer

TIME	FILE NAME	(Dial) PATH	NOTES	NUMBER SCANS	Resolution (cm-1)	Gas TEMP (F)	Gas PRESSURE	BKG	APOD	
10:40	BKG0712A	10.03	N_2 through cell @ 1.12 LPM	500	1.0	126.0	756.3	—	NB/Mod	GAIN=2
10:55	CTS0712A	10.03	20.0 ppm Ethylene in N_2 @ 1.06 LPM	500	1.0	126.0	756.1	712 A	"	"
11:10	CTS0712B	10.03	20. ppm Ethylene @ 0.79 LPM (712A was ~10% low)	500	1.0	126.2	755.9	"	"	"
12:20	1960712A	10.03	52.6 ppm Methane in N_2 @ 0.99 LPM ALU0946983	500	1.0	126.1	755.9	712 A	"	"
12:45	BKG0712B	10.03	N_2 @ 1.11 LPM	500	1.0	126.1	756.0	—	"	"
14:40	CTS0712C	10.03	20.0 ppm Ethylene @ 1.10 LPM	500	1.0	126.3	755.6	712 B	"	"
14:56	1960712B	10.03	52.6 ppm Methane in N_2 @ 1.06 LPM	500	1.0	126.4	755.5	712 B	"	"

emc_back\fy99\4951\12\refs\ftir data sheets for references.xls
07-07-99

Reviewed by [signature]
Date 7/15/99

FTIR DATA FORM

Background and Calibration Spectra

PROJECT NO. 4951-12 and 13 BAROMETRIC: 752.9

SITE: NCO Laboratory DATE: 7/13/99 OPERATOR: T. Geyer

TIME	FILE NAME	(Dial) PATH	NOTES	NUMBER SCANS	Resolution (cm-1)	Gas TEMP (F)	Gas PRESSURE	BKG	APOD	
11:00	BKG0713A	10.03	N_2 through cell @ 0.95 LPM Purge Valve for Bkg	500	1.0	125.3	754.9	–	N/B Med	Gain = 2
11:15	BKG0713B	10.03	Same conditions RHD Vacuum Compartments dryer	500	1.0	125.4	754.9	–	"	"
11:54	BKG0713C	10.03	Same conditions w/ dryer cabinet 0.97 LPM	500	1.0	125.4	755.0	–	"	"
12:30	CTS0713A	10.03	20.0 ppm Ethylene in N_2 RLM#25384 @ 0.95 LPM	500	1.0	125.5	755.0	713 C	"	"
13:03	CTS0713B	10.03	" @ 0.92 LPM	500	1.0	125.6	754.8	"	"	"
13:22	1960713A	10.03	52.6 ppm Methane @ 1.02 LPM	500	1.0	125.5	755.1	713 C	"	"
14:53	CTS0713C	10.03	20.0 ppm Ethylene @ 0.99 LPM	500	1.0	125.4	754.7	713C	"	"
15:08	1960713B	10.03	52.6 ppm Methane @ 1.12 LPM	500	1.0	125.4	755.0	713 C	"	"

emc_back\fy99\4951\12\refs\ftir data sheets for references.xls
07-07-99

Reviewed by [signature]
Date 7/15/99

FTIR DATA FORM

Background and Calibration Spectra

PROJECT NO. 4951-12 and 13 **BAROMETRIC:** 754.8 torr

SITE: NCO Laboratory **DATE:** 7/15/99 **OPERATOR:** T. Gupes

TIME	FILE NAME	(Dial) PATH	NOTES	NUMBER SCANS	Resolution (cm-1)	Gas TEMP (F)	Gas PRESSURE	BKG	APOD	
11:40	BK60715A	10.03	N2 through cell @ 1.09 LPM	500	1.0	125.5	757.1 ~~754.8~~	–	N/B mod	Gain 02
12:15	CT50715A	10.03	20.0 ppm Ethylene @ 1.07 LPM ALM025384	500	1.0	125.2	757.1	A	"	"
12:36	196 0715A	10.03	52.6 ppm Methane @ 1.09 LPM	500	1.0	125.2	757.0	A	"	"
14:03	BK60715B	10.03	N2 @ 1.00 LPM	500	1.0	125.1	756.6	–	"	"
16:00	CT50715B	10.03	20.0 ppm Ethylene 0.97 LPM ALM025384	500	1.0	125.0	755.8	715B	"	"
16:20	196 0715B	10.03	ALM 46483 @ 1.05 LPM Methane (52.6 ppm)	500	1.0	125.0 ~~1.05 LPM~~	755.8	715B	"	"

emc_back\fy99\4951\12\refs\ftir data sheets for references.xls
07-07-99

Reviewed by [signature]
Date 7/15/99

FTIR DATA FORM

Background and Calibration Spectra

PROJECT NO. 4951-12 and 13 BAROMETRIC: 755.2

SITE: NCO Laboratory DATE: 7/16/99 OPERATOR: T. Gayer

TIME	FILE NAME	(Dial) PATH	NOTES	NUMBER SCANS	Resolution (cm-1)	Gas TEMP (F)	Gas PRESSURE	BKG	APOD
11:25	BK0716A	10.03	N_2 through cell @ 0.98 LPM	500	1.0	125.12	757.2	–	NB/Mod
12:39	CT0716A	10.03	20.0 ppm Ethylene @ 1.00 LPM	500	1.0	125.2	757.0	716A	"
12:51	1960716A	10.03	52.6 ppm Methane ALM046483 @ 1.09 LPM	500	1.0	125.1	757.2	716A	"
15:15	CTS0716B	10.03	20.0 ppm Ethylene ALM025984 @ 1.0 LPM	500	1.0	125.2	756.1	716A	"
15:33	1960716A	10.03	52.6 ppm Methane @ 0.99 LPM	500	1.0	125.2°C	756.1	716A	"

Gain = 2

emc_back\fy99\4951\12\refs\ftir data sheets for references.xls
07-07-99

Reviewed by [signature]
Date 7/16/99

Project No. 4951-12, 13

MIDWEST RESEARCH INSTITUTE
FTIR Reference Spectrum Checklist

DATE: 7-9-99

OPERATOR: T. Geyer

	Initials
Reference Spectrum Sample	Hexane
Start Time (data collect)	15:24
Record Cell path length setting	10.03
Record Background Spectrum File Name	BK60709B
Record CTS Spectrum File Name	CTS0709A,B / 1960709
Record Compound Name	Hexane
Record Cylinder Identification Number	AL#45092
Record Cylinder Concentration	49.6 ppm
Record Spectrum File Name	0950709A
Fill cell to ambient pressure with gas from cylinder standard	TG
Open cell outlet vent valve	TG
Adjust sample flow through cell to 0.5 to 1 LPM. Record flow rate	1.00 LPM
Allow to equilibrate for 5 minutes	TG
Record sample pressure in cell	757.3 torr
Record sample flow rate through cell	1.002 LPM
Start spectrum collect program	TG
Record information in data book	TG
Copy Spectrum and Interferogram to backup directories	TG
End Time	15:34
	126.2°C

Reviewed by: [signature]

Date: 7/15/99

Project No. 4951-12,13

MIDWEST RESEARCH INSTITUTE
FTIR Reference Spectrum Checklist

DATE: 7-9-99

OPERATOR: T. Gayor

	Initials
Reference Spectrum Sample	HEXANE 0950709B
Start Time 15:36	
Record Cell path length setting	10.03
Record Background Spectrum File Name	BHG0709B
Record CTS Spectrum File Name	C7S0709A,D 1960709 A-
Record Compound Name	HEXANE
Record Cylinder Identification Number	AL045092
Record Cylinder Concentration	49.6 ppm
Record Spectrum File Name	0950709B
Fill cell to ambient pressure with gas from cylinder standard	TG
Open cell outlet vent valve	TG
Adjust sample flow through cell to 0.5 to 1 LPM. Record flow rate	1.09 LPM
Allow to equilibrate for 5 minutes	continued from "A"
Record sample pressure in cell	751.5 ppm
Record sample flow rate through cell	1.09 LPM
Start spectrum collect program	TG
Record information in data book	TG
Copy Spectrum and Interferogram to backup directories	TG
End Time	15:46
	126.1 °C

Reviewed by: [illegible]

Date: 7/15/99

Project No. 4951-12, 13

MIDWEST RESEARCH INSTITUTE
FTIR Reference Spectrum Checklist

DATE: 7-12-99

OPERATOR: T. Geyer

	Initials
Reference Spectrum Sample	
Start Time	~~13:14~~ 1-pentene
Record Cell path length setting	13:14
Record Background Spectrum File Name	10.03
Record CTS Spectrum File Name	BKG0712 B
Record Compound Name	CTS 0712 A-C, 196
Record Cylinder Identification Number	1-Pentene
Record Cylinder Concentration	ALM041929
Record Spectrum File Name	50.1 PPM
Fill cell to ambient pressure with gas from cylinder standard	IPS0712A
Open cell outlet vent valve	TG
Adjust sample flow through cell to 0.5 to 1 LPM. Record flow rate	TG
Allow to equilibrate for 5 minutes	1.00 LPM
Record sample pressure in cell	TG
Record sample flow rate through cell	755.6
Start spectrum collect program	1.00 LPM
Record information in data book	TG
Copy Spectrum and Interferogram to backup directories	TG
End Time	TG
	13:24
	126.0°C

Reviewed by: [signature]

Date: 7/15/99

Project No. 4951-12, 13

MIDWEST RESEARCH INSTITUTE
FTIR Reference Spectrum Checklist

DATE: 7/12/99

OPERATOR: T. Geyer

	Initials
Reference Spectrum Sample	1-Pentene
Start Time	13:38
Record Cell path length setting	10.03
Record Background Spectrum File Name	BK60712 B
Record CTS Spectrum File Name	CTS0712A-C 1960712
Record Compound Name	1-Pentene
Record Cylinder Identification Number	ALM41929
Record Cylinder Concentration	50.1 ppm
Record Spectrum File Name	1PE0712B
Fill cell to ambient pressure with gas from cylinder standard	TG
Open cell outlet vent valve	TG
Adjust sample flow through cell to 0.5 to 1 LPM. Record flow rate	1.03 LPM
Allow to equilibrate for 5 minutes continued from A	TG
Record sample pressure in cell	755.6
Record sample flow rate through cell	1.03 LPM
Start spectrum collect program	TG
Record information in data book	TG
Copy Spectrum and Interferogram to backup directories	TG
End Time	13:48
	126.1°C

Reviewed by: [signature]

Date: 7/15/99

Project No. 4951-12,13

MIDWEST RESEARCH INSTITUTE
FTIR Reference Spectrum Checklist

DATE: 7-12-99

OPERATOR: T Geyer

	Initials
Reference Spectrum Sample	~~[illegible]~~ n-hepta
Start Time	14:10
Record Cell path length setting	10.03
Record Background Spectrum File Name	BKG0712B
Record CTS Spectrum File Name	CTS0712A-C 19607121
Record Compound Name	n-heptane
Record Cylinder Identification Number	AAL 21337
Record Cylinder Concentration	49.97 ppm
Record Spectrum File Name	HSP0712A
Fill cell to ambient pressure with gas from cylinder standard	TG
Open cell outlet vent valve	TG
Adjust sample flow through cell to 0.5 to 1 LPM. Record flow rate	1.00 LPM
Allow to equilibrate for 5 minutes C	TG
Record sample pressure in cell	755.2 torr
Record sample flow rate through cell	1.00 LPM
Start spectrum collect program	TG
Record information in data book	TG
Copy Spectrum and Interferogram to backup directories	TG
End Time	14:20

Reviewed by: [signature]

Date: 7/15/99

Project No. 4951-12, 13

MIDWEST RESEARCH INSTITUTE
FTIR Reference Spectrum Checklist

DATE: 7/12/99

OPERATOR: T. Geyer

	Initials
Reference Spectrum Sample	n-heptane
Start Time	14:20
Record Cell path length setting	10.03
Record Background Spectrum File Name	BK0712B
Record CTS Spectrum File Name	CTS0712A-C, 1PG0712A,
Record Compound Name	n-heptane
Record Cylinder Identification Number	AAL21337
Record Cylinder Concentration	49.97 ppm
Record Spectrum File Name	HEP0712B
Fill cell to ambient pressure with gas from cylinder standard	TG
Open cell outlet vent valve	TG
Adjust sample flow through cell to 0.5 to 1 LPM. Record flow rate	1.00 LPM
Allow to equilibrate for 5 minutes Continued from A	TG
Record sample pressure in cell	755.3
Record sample flow rate through cell	1.00 LPM
Start spectrum collect program	TG
Record information in data book	TG
Copy Spectrum and Interferogram to backup directories	TG
End Time	14:39

Reviewed by: T. Geyer

Date: 7/15/99

Project No. 4961-12, 13

MIDWEST RESEARCH INSTITUTE
FTIR Reference Spectrum Checklist

DATE: 7/13/99

OPERATOR: T. Geyer

		Initials
Reference Spectrum Sample		2-methyl-2-pentene
Start Time		13:56
Record Cell path length setting	10.03	
Record Background Spectrum File Name		BK0713C
Record CTS Spectrum File Name		CTS0713A-C (1960713A,B
Record Compound Name		2-methyl-2 pentene
Record Cylinder Identification Number		ALM054078
Record Cylinder Concentration		51.4 ppm
Record Spectrum File Name		2M2P713B
Fill cell to ambient pressure with gas from cylinder standard		TG
Open cell outlet vent valve		TG
Adjust sample flow through cell to 0.5 to 1 LPM. Record flow rate		TG
Allow to equilibrate for 5 minutes	continued from A	TG
Record sample pressure in cell		754.9
Record sample flow rate through cell		0.98 LPM
Start spectrum collect program		TG
Record information in data book		TG
Copy Spectrum and Interferogram to backup directories		TG
End Time		14:05

Reviewed by: T. Geyer

Date: 7/15/99

Project No. 4951-12,13

MIDWEST RESEARCH INSTITUTE
FTIR Reference Spectrum Checklist

DATE: 7/13/99

OPERATOR: J. Geyer

	Initials
Reference Spectrum Sample	3-methylpentane
Start Time	14:21
Record Cell path length setting	10.03
Record Background Spectrum File Name	BK60713C
Record CTS Spectrum File Name	CTS0713A-C 1960713A;
Record Compound Name	3-methylpentane
Record Cylinder Identification Number	ALM037409
Record Cylinder Concentration	50.0 ppm
Record Spectrum File Name	3MP0713A
Fill cell to ambient pressure with gas from cylinder standard	JG
Open cell outlet vent valve	JG
Adjust sample flow through cell to 0.5 to 1 LPM. Record flow rate	1.00 LPM
Allow to equilibrate for 5 minutes	JG
Record sample pressure in cell	754.6
Record sample flow rate through cell	1.00 LPM
Start spectrum collect program	JG
Record information in data book	JG
Copy Spectrum and Interferogram to backup directories	JG
End Time	14:30

Reviewed by: J. Geyer

Date: 7/15/99

Project No. 4951-12,13

MIDWEST RESEARCH INSTITUTE
FTIR Reference Spectrum Checklist

DATE: 7/13/99

OPERATOR: T. Gayer

	Initials
Reference Spectrum Sample	3-methylpentane
Start Time	14:34
Record Cell path length setting	10.03
Record Background Spectrum File Name	BK60713C
Record CTS Spectrum File Name	CTS0713A-C 1960713
Record Compound Name	3-methylpentane
Record Cylinder Identification Number	ALM037409
Record Cylinder Concentration	50.0 ppm
Record Spectrum File Name	3MP0713B
Fill cell to ambient pressure with gas from cylinder standard	TG
Open cell outlet vent valve	TG
Adjust sample flow through cell to 0.5 to 1 LPM. Record flow rate	0.98 LPM
Allow to equilibrate for 5 minutes Continued from A	TG
Record sample pressure in cell	754.6 torr
Record sample flow rate through cell	0.98 LPM
Start spectrum collect program	TG
Record information in data book	TG
Copy Spectrum and Interferogram to backup directories	TG
End Time	1444

Reviewed by: TG

Date: 7/15/99

Project No. 4951-12,13

MIDWEST RESEARCH INSTITUTE
FTIR Reference Spectrum Checklist

DATE: 7/15/99

OPERATOR: T. Geyer

	Initials
Reference Spectrum Sample	(2,2,4-trimethylpentane isooctane
Start Time (start purge)	12:52
Record Cell path length setting	10.03
Record Background Spectrum File Name	BKG0715A
Record CTS Spectrum File Name	CTS0715A,B 960715A
Record Compound Name	isooctane
Record Cylinder Identification Number	~~[illegible]~~ ALM044
Record Cylinder Concentration	50.3 ppm
Record Spectrum File Name	1650715A
Fill cell to ambient pressure with gas from cylinder standard	TG
Open cell outlet vent valve	TG
Adjust sample flow through cell to 0.5 to 1 LPM. Record flow rate	1.06 LPM
Allow to equilibrate for 5 minutes	TG
Record sample pressure in cell	757.0
Record sample flow rate through cell	1.02 LPM
Start spectrum collect program	TG
Record information in data book	TG
Copy Spectrum and Interferogram to backup directories	TG
End Time	13:08
	125.2 °C

Reviewed by: [signature]

Date: 7/16/99

Project No. 7951-12,13

MIDWEST RESEARCH INSTITUTE
FTIR Reference Spectrum Checklist

DATE: 7/15/99

OPERATOR: T. Geyer

	Initials
Reference Spectrum Sample	Isooctane
Start Time	1310
Record Cell path length setting	10.03
Record Background Spectrum File Name	BK60715A
Record CTS Spectrum File Name	CTS0715A.B 1960715A.B
Record Compound Name	Isooctane
Record Cylinder Identification Number	AL004469B
Record Cylinder Concentration	50.3 ppm
Record Spectrum File Name	1650715A
Fill cell to ambient pressure with gas from cylinder standard continued from A	TG
Open cell outlet vent valve	TG
Adjust sample flow through cell to 0.5 to 1 LPM. Record flow rate	0.98
Allow to equilibrate for 5 minutes	TG
Record sample pressure in cell	756.9
Record sample flow rate through cell	0.98
Start spectrum collect program	TG
Record information in data book	TG
Copy Spectrum and Interferogram to backup directories	TG
End Time	

Reviewed by: [illegible]

Date: 7/16/99

Project No. 4951-12, 13

MIDWEST RESEARCH INSTITUTE
FTIR Reference Spectrum Checklist

DATE: 7/13/99

OPERATOR: T. Geyer

	Initials
Reference Spectrum Sample	n-Pentane
Start Time	14:30
Record Cell path length setting	12.03
Record Background Spectrum File Name	BKG0715B
Record CTS Spectrum File Name	CTS0715A,B BKG0715A,B
Record Compound Name	n-Pentane
Record Cylinder Identification Number	AL40241358
Record Cylinder Concentration	49.99
Record Spectrum File Name	Pen0715A
Fill cell to ambient pressure with gas from cylinder standard	TG
Open cell outlet vent valve	TG
Adjust sample flow through cell to 0.5 to 1 LPM. Record flow rate	TG 1.07 LPM
Allow to equilibrate for 5 minutes	TG
Record sample pressure in cell	756.4
Record sample flow rate through cell	1.09 LPM
Start spectrum collect program	TG
Record information in data book	TG
Copy Spectrum and Interferogram to backup directories	TG
End Time	14:48
	124.9 °C

Reviewed by: [signature]

Date: 7/16/99

Project No. 4951-12,13

MIDWEST RESEARCH INSTITUTE
FTIR Reference Spectrum Checklist

DATE: 7/15/99

OPERATOR: T. Geyer

	Initials
Reference Spectrum Sample	n-Butane
Start Time	15:06
Record Cell path length setting	10.03
Record Background Spectrum File Name	BKG0715B
Record CTS Spectrum File Name	CTS0715A,B 19607158
Record Compound Name	Butane
Record Cylinder Identification Number	ALM020217
Record Cylinder Concentration	51.3 ppm
Record Spectrum File Name	BuT0715A
Fill cell to ambient pressure with gas from cylinder standard	TG
Open cell outlet vent valve	TG
Adjust sample flow through cell to 0.5 to 1 LPM. Record flow rate	1.06 LPM
Allow to equilibrate for 5 minutes	TG
Record sample pressure in cell	756.1 torr
Record sample flow rate through cell	1.00 LPM
Start spectrum collect program	TG
Record information in data book	TG
Copy Spectrum and Interferogram to backup directories	TG
End Time	TG 15:23
	124.9°C

Reviewed by: 7/16 TG

Date: 7/16/99

Project No. 4951-12, 13

MIDWEST RESEARCH INSTITUTE
FTIR Reference Spectrum Checklist

DATE: 7/15/99

OPERATOR: T. Gayer

	Initials
Reference Spectrum Sample continued from "A"	Butane
Start Time	10:07
Record Cell path length setting	10.03
Record Background Spectrum File Name	712B
Record CTS Spectrum File Name	CT0712A,B 196070
Record Compound Name	Butane
Record Cylinder Identification Number	ALM020247
Record Cylinder Concentration	51.3 ppm
Record Spectrum File Name	BUT0715A
Fill cell to ambient pressure with gas from cylinder standard	TG
Open cell outlet vent valve	TG
Adjust sample flow through cell to 0.5 to 1 LPM. Record flow rate	1.02
Allow to equilibrate for 5 minutes	TG
Record sample pressure in cell	756.1
Record sample flow rate through cell	1.02
Start spectrum collect program	TG
Record information in data book	TG
Copy Spectrum and Interferogram to backup directories	TG
End Time	15:40

124.9 °C

Reviewed by: TG

Date: 7/16/99

Project No. 4951-12, 13

MIDWEST RESEARCH INSTITUTE
FTIR Reference Spectrum Checklist

DATE: 7/16/99

OPERATOR: T. Geyer

	Initials
Reference Spectrum Sample	2-methyl-2-butene
Start Time	13:08
Record Cell path length setting	10.03
Record Background Spectrum File Name	BK607160A
Record CTS Spectrum File Name	CTS07160A,B 1960716
Record Compound Name	AE
Record Cylinder Identification Number	AL40058716
Record Cylinder Concentration	50.04 ppm
Record Spectrum File Name	2M28716A
Fill cell to ambient pressure with gas from cylinder standard	AE
Open cell outlet vent valve	AE
Adjust sample flow through cell to 0.5 to 1 LPM. Record flow rate	AE
Allow to equilibrate for 5 minutes	AE
Record sample pressure in cell	156.8
Record sample flow rate through cell	1.00 LPM
Start spectrum collect program	AE
Record information in data book	AE
Copy Spectrum and Interferogram to backup directories	AE
End Time	13:30
	125.2°C

Reviewed by: [signature]

Date: 7/16/99

Project No. 4451-12, 13

MIDWEST RESEARCH INSTITUTE
FTIR Reference Spectrum Checklist

DATE: 7/16/99

OPERATOR: T. Gayer

		Initials
Reference Spectrum Sample		2-methyl-2-butene
Start Time	13:30	10-03
Record Cell path length setting		
Record Background Spectrum File Name		BK60716A
Record CTS Spectrum File Name		CTS0716A,B MG0716A,B
Record Compound Name		2/6
Record Cylinder Identification Number		ALM005516
Record Cylinder Concentration		50.04 ppm
Record Spectrum File Name		2M20716B
Fill cell to ambient pressure with gas from cylinder standard		2/6
Open cell outlet vent valve		2/6
Adjust sample flow through cell to 0.5 to 1 LPM. Record flow rate		2/6
Allow to equilibrate for 5 minutes	Continued from "A"	2/6
Record sample pressure in cell		756.6 torr
Record sample flow rate through cell		0.95 LPM
Start spectrum collect program		2/6
Record information in data book		2/6
Copy Spectrum and Interferogram to backup directories		2/6
End Time		1540

Reviewed by: [signature]

Date: 7/16/99

Project No. _____

MIDWEST RESEARCH INSTITUTE
FTIR Reference Spectrum Checklist

DATE: _____

OPERATOR: _____

	Initials
Reference Spectrum Sample	
Start Time	_____
Record Cell path length setting	_____
Record Background Spectrum File Name	_____
Record CTS Spectrum File Name	_____
Record Compound Name	_____
Record Cylinder Identification Number	_____
Record Cylinder Concentration	_____
Record Spectrum File Name	_____
Fill cell to ambient pressure with gas from cylinder standard	_____
Open cell outlet vent valve	_____
Adjust sample flow through cell to 0.5 to 1 LPM. Record flow rate	_____
Allow to equilibrate for 5 minutes	_____
Record sample pressure in cell	_____
Record sample flow rate through cell	_____
Start spectrum collect program	_____
Record information in data book	_____
Copy Spectrum and Interferogram to backup directories	_____
End Time	_____

Reviewed by: _____ Date: _____

Project No. 4951-12,13

MIDWEST RESEARCH INSTITUTE
FTIR Reference Spectrum Checklist

DATE: 7/16/99

OPERATOR: T Geyer

	Initials
Reference Spectrum Sample	2-methyl-1-pentene
Start Time	1349
Record Cell path length setting	10.03
Record Background Spectrum File Name	2K60716A
Record CTS Spectrum File Name	CTS0716A 1960716
Record Compound Name	T/6
Record Cylinder Identification Number	AL40017936
Record Cylinder Concentration	50.08 ppm
Record Spectrum File Name	2M18716A
Fill cell to ambient pressure with gas from cylinder standard	T/6
Open cell outlet vent valve	T/6
Adjust sample flow through cell to 0.5 to 1 LPM. Record flow rate	T/6 1.05LPM
Allow to equilibrate for 5 minutes	T/6
Record sample pressure in cell	756.4
Record sample flow rate through cell	1.06 LPM
Start spectrum collect program	T/6
Record information in data book	
Copy Spectrum and Interferogram to backup directories	
End Time	

Reviewed by: _____ Date: _____

Project No. 4951-12, 13

MIDWEST RESEARCH INSTITUTE
FTIR Reference Spectrum Checklist

DATE: 7/16/99

OPERATOR: T. Geyer

	Initials
Reference Spectrum Sample	2-methyl-1-pentene
Start Time — continued from "A"	10:07
Record Cell path length setting	716A
Record Background Spectrum File Name	CTS716A 196716A
Record CTS Spectrum File Name	
Record Compound Name	
Record Cylinder Identification Number	AL401793G
Record Cylinder Concentration	50.08
Record Spectrum File Name	2M1P716B
Fill cell to ambient pressure with gas from cylinder standard	TG
Open cell outlet vent valve	TG
Adjust sample flow through cell to 0.5 to 1 LPM. Record flow rate	TG
Allow to equilibrate for 5 minutes	TG
Record sample pressure in cell	756.3
Record sample flow rate through cell	0.97 LPM
Start spectrum collect program	TG
Record information in data book	TG
Copy Spectrum and Interferogram to backup directories	TG
End Time	1440

Reviewed by: _____ Date: _____

Project No. 4951-12,13

MIDWEST RESEARCH INSTITUTE
FTIR Reference Spectrum Checklist

DATE: 7/16/99

OPERATOR: T. Geyer

	Initials
Reference Spectrum Sample	n-heptane
Start Time	1425
Record Cell path length setting	10.03
Record Background Spectrum File Name	716 A
Record CTS Spectrum File Name	CTS0716A 1960716A
Record Compound Name	TG
Record Cylinder Identification Number	ARL21337
Record Cylinder Concentration	49.37 ppm
Record Spectrum File Name	HEP0716A
Fill cell to ambient pressure with gas from cylinder standard	TG
Open cell outlet vent valve	TG
Adjust sample flow through cell to 0.5 to 1 LPM. Record flow rate	0.97 LPM
Allow to equilibrate for 5 minutes	TG
Record sample pressure in cell	TG 756.1
Record sample flow rate through cell	0.95 LPM
Start spectrum collect program	TG
Record information in data book	TG
Copy Spectrum and Interferogram to backup directories	TG
End Time	1450

Reviewed by: _____ Date: _____

Project No. 4951-12,13

MIDWEST RESEARCH INSTITUTE
FTIR Reference Spectrum Checklist

DATE: 7/16/99

OPERATOR: T. Gayer

	Initials
Reference Spectrum Sample	
Start Time continued from "A"	n-heptane
Record Cell path length setting	—
Record Background Spectrum File Name	10.03
Record CTS Spectrum File Name	716A
Record Compound Name	CTS0716A 1960716A
Record Cylinder Identification Number	—
Record Cylinder Concentration	AAL 21337
Record Spectrum File Name	49.97
Fill cell to ambient pressure with gas from cylinder standard	HS.P0716A
Open cell outlet vent valve	7/16
Adjust sample flow through cell to 0.5 to 1 LPM. Record flow rate	7/16
Allow to equilibrate for 5 minutes	7/16
Record sample pressure in cell	7/16
Record sample flow rate through cell	756.1
Start spectrum collect program	0.96 LPM
Record information in data book	7/16
Copy Spectrum and Interferogram to backup directories	7/16
End Time	7/16
	15:00

Reviewed by: _____ Date: _____

FTIR DATA FORM

Sampling Data

PROJECT NO. 4951-12 and 13

BAROMETRIC: 751.4

SITE: NCO Laboratory

DATE: 7/9/99

OPERATOR: T. Geiger

Time	File Name	(Dial) Path	NOTES	Scans	Resolution (cm-1)	Gas Temp (°C)	Flow Rate	Gas Pressure	BKG
15:24	0950709A	10.03	Hexane (49.6 ppm in N_2) @ 1.0 LPM AL M045092	500	1.0	126.2 ~~751.3~~	1.0 LPM	torr 751.3	709 B
15:36	0950709~~A~~ B	10.03	Hexane, 49.6 ppm in N_2 AL M045092	500	1.0	126.1	1.09 LPM	751.5	709 B

emc_back\fy99\4951\12\refs\ftir data sheets for references.xls
07-07-99

Reviewed by [signature]
Date 7/9/99

FTIR DATA FORM

Sampling Data

PROJECT NO. 4951-12 and 13

BAROMETRIC: 753.1

SITE: NCO Laboratory

DATE: 7/12/99

OPERATOR: T. Geyer

Time	File Name	(Dial) Path	NOTES	Scans	Resolution (cm-1)	Gas Temp (°C)	Flow Rate	Gas Pressure	BKG
13:14	1PE0702A	10.03	50.1 ppm 1-Pentane AL# ~~[illegible]~~ 41929	500	1.0	126.0	1.00 LPM	755.6	B
13:38	1PE0712B	10.03	50.1 ppm 1-Pentene	500	1.0	126.1	1.03 LPM	755.6	B
14:10	HEP0712A	10.03	49.97 ppm n-heptane AAL 21337	500	1.0	126.2	1.00 LPM	755.2	B
14:20	HEP0712B	10.03	"	500	1.0	126.4	1.00 LPM	755.3	B

emc_back\fy99\4951\12\refs\ftir data sheets for references.xls
07-07-99

Reviewed by [signature]
Date 7/12/99

FTIR DATA FORM

Sampling Data

PROJECT NO. 4951-12 and 13

BAROMETRIC: 752.9

SITE: NCO Laboratory

DATE: 7/13/99

OPERATOR: T. Geyer

Time	File Name	(Dial) Path	NOTES	Scans	Resolution (cm-1)	Gas Temp (°C)	Flow Rate	Gas Pressure	BKG
13:46	2M2P713A	10.03	2-methyl-2-pentene ALM# 54078 51.4 ppm	500	1.0	125.6	1.00 LPM	754.9	713C
13:56	2M2P713B	10.03	"	500	1.0	125.6	0.98 LPM	754.9	713C
14:21	3MP0713A	10.03	3-Methylpentane (50.0 ppm) ALM# 37409	500	1.0	125.5	1.00 LPM	754.6	713C
14:34	3MP0713B	10.03	"	500	1.0	125.5	0.98 LPM	754.6	713C

emc_back\fy99\4951\12\refs\ftir data sheets for references.xls
07-07-99

Reviewed by [signature]
Date 7/13/99

FTIR DATA FORM

Sampling Data

PROJECT NO. 4951-12 and 13

BAROMETRIC: 754.8 torr

SITE: NCO Laboratory

DATE: 7/15/99

OPERATOR: T. Geyer

Time	File Name	(Dial) Path	NOTES	Scans	Resolution (cm-1)	Gas Temp (°C)	Flow Rate	Gas Pressure	BKG
12:58	1650715A	10.03	Iso octane 50.3 ppm in N_2 ALM044693	500	1.0	125.3	1.02 LPM	756.9	715A
13:13 ~~13:40~~	1650715B	10.03	Isooctane @ 0.98 LPM	500	1.0	125.2°c	0.98 LPM	756.9	715A
14:37	PEN0715A	10.03	n-Pentane @ 1.09 LPM	500	1.0	124.9°c	1.09	756.2	715 B
14:48	PEN0715B	10.03	n-Pentane @ ALM0241358	500	1.0	124.9	1.10	756.5	715 B
15:13 ~~15:40~~	But0715A	10.03	Butane 51.3 ppm ALM020217	500	1.0	124.8	1.00 LPM	756.1	715 B
15:30	BUT0715B	10.03	51.3 ppm Butane	500	1.0	124.9	1.02 LPM	756.0	715 B

emc_back\fy99\4951\12\refs\ftir data sheets for references.xls
07-07-99

Reviewed by [illegible]
Date 7/14/99

FTIR DATA FORM

Sampling Data

PROJECT NO. 4951-12 and 13

BAROMETRIC: 755.2

SITE: NCO Laboratory

DATE: 7/16/99

OPERATOR: T. Geyer

Time	File Name	(Dial) Path	NOTES	Scans	Resolution (cm-1)	Gas Temp (°C)	Flow Rate	Gas Pressure	BKG
13:16	~~2MR~~ 2MR0716A	10.03	2-methyl-2-butene AL MOO 5876, 60.04 ppm	500	1.0	125.2	1.00 LPM	756.8	716A
1330	2M2A716A 2M2B0716A	10.03	2-methyl-2-butene	500	1.0	125.2	0.95 LPM	756.6	716A
1352	2M1P716A	10.03	2-methyle-1-pentene ALM01 7936 50.08 ppm	500	1.0	125.2	1.06 LPM	756.4	716A
1410	2M1P716B	10.03	2-methyl-1-pentene	500	1.0	125.1	0.97	756.3	716A
1440	HEP0716A	10.03	n-heptane 49.97 ppm AAL 21337 { re-measure because 1/2 CTS was low }	500	1.0	125.3	0.95 LPM	756.1	716A
1450	HEP0716B	10.03	n-heptane	500	1.0	125.3	0.96 LPM	756.1	716A

emc_back\fy99\4951\12\refs\ftir data sheets for references.xls
07-07-99

Reviewed by [illegible]
Date 7/16/99

Project No. 4951-12, 13

MIDWEST RESEARCH INSTITUTE
DAILY CHECKLIST
Shut Down Procedure

DATE: 9-7-99

OPERATOR: T. Geyer

	Initials
Purge sample from cell using ambient air or nitrogen	
Record Nitrogen Background	
Purge cell with dry nitrogen	JG
Verify cell is as dry as previous background	
Record ambient pressure using cell Barocell gauge	
Record nitrogen flow rate (about sampling flow rate)	
Collect Background (AQBK) under continuous flow and ambient pressure	
Record information in data book.	
Copy Background to C-drive and backup using batch file.	
Record CTS Spectrum	
Evacuate Cell	
Fill Cell with CTS gas	
Open cell outlet and purge cell with CTS at sampling rate (1 to 5 LPM)	
Record cylinder ID Number	
Record CTS gas cylinder identity and concentration	
Record and copy spectrum and interferogram to C-drive and back up using CTS batch file.	
Record Barytron pressure during collect	
Record information on "Background and Calibrations" data sheet.	
Verify that spectrum and interferogram were copied to directories.	
Record CTS Spectrum File Name	CTS0707e
Close cylinders	JG
Evacuate or Purge CTS from cell using nitrogen	JG
Leave cell under low nitrogen purge or under vacuum	JG
Fill MCT detector dewar	JG

Reviewed by: J. Geyer

Date: 7/7/99

Project No. 4951.12, 13

MIDWEST RESEARCH INSTITUTE
DAILY CHECKLIST
Shut Down Procedure

DATE: 7/8/99

OPERATOR: T. Geyer

	Initials
Cell has been heated for ~ 4 hrs. and is still stabilizing. This Background & CTS are for stability to tomorrow's measurements	
Purge sample from cell using ambient air or nitrogen	
Record Nitrogen Background	
Purge cell with dry nitrogen	
Verify cell is as dry as previous background	no
Record ambient pressure using cell Barocell gauge	749.0
Record nitrogen flow rate (about sampling flow rate)	0.50 LPM
Collect Background (AQBK) under continuous flow and ambient pressure	
Record information in data book.	
Copy Background to C-drive and backup using batch file.	
Record CTS Spectrum	
Purge ~~Evacuate~~ Cell	
Fill Cell with CTS gas	
Open cell outlet and purge cell with CTS at sampling rate (1 to 5 LPM)	0.99 LPM
Record cylinder ID Number	ALM 25384
Record CTS gas cylinder identity and concentration	20 ppm Ethylene
Record and copy spectrum and interferogram to C-drive and back up using CTS batch file.	
Record Barytron pressure during collect	751.0 torr
Record information on "Background and Calibrations" data sheet.	
Verify that spectrum and interferogram were copied to directories.	
Record CTS Spectrum File Name	CTS0708B
Close cylinders	
Evacuate or Purge CTS from cell using nitrogen	
Leave cell under low nitrogen purge or under vacuum	
Fill MCT detector dewar	

Reviewed by: [signature]

Date: 7/8/99

Project No. 4951-12-13

MIDWEST RESEARCH INSTITUTE
DAILY CHECKLIST
Shut Down Procedure

DATE: 7/9/99

OPERATOR: T. Geyer

	Initials
Purge sample from cell using ambient air or nitrogen	
Record Nitrogen Background	
Purge cell with dry nitrogen	TG
Verify cell is as dry as previous background	TG
Record ambient pressure using cell Barocell gauge	749.1
Record nitrogen flow rate (about sampling flow rate)	
Collect Background (AQBK) under continuous flow and ambient pressure 7098	
Record information in data book.	TG
Copy Background to C-drive and backup using batch file.	TG
Record CTS Spectrum	
Purge ~~Evacuate~~ Cell	TG
Fill Cell with CTS gas	TG
Open cell outlet and purge cell with CTS at sampling rate (1 to 5 LPM)	TG
Record cylinder ID Number	ALM025384
Record CTS gas cylinder identity and concentration Also methane - see data sheet. TG	20 ppm ethylene
Record and copy spectrum and interferogram to C-drive and back up using CTS batch file.	TG
Record Barytron pressure during collect	TG 751.1
Record information on "Background and Calibrations" data sheet.	TG
Verify that spectrum and interferogram were copied to directories.	TG
Record CTS Spectrum File Name	CTS0709B
Close cylinders	TG
Evacuate or Purge CTS from cell using nitrogen	TG
Leave cell under low nitrogen purge or under vacuum	TG
Fill MCT detector dewar	—

Reviewed by: [signature]

Date: 7/12/99

Project No. 4951-12-13

MIDWEST RESEARCH INSTITUTE
DAILY CHECKLIST
Shut Down Procedure

DATE: 7/12/99

OPERATOR: T. Geyer

	Initials
Purge sample from cell using ambient air or nitrogen	
Record Nitrogen Background	
Purge cell with dry nitrogen	[illegible]
Verify cell is as dry as previous background	[illegible]
Record ambient pressure using cell Barocell gauge	753.1 [illegible]
Record nitrogen flow rate (about sampling flow rate)	
Collect Background (AQBK) under continuous flow and ambient pressure	
Record information in data book.	
Copy Background to C-drive and backup using batch file.	

used Background "B"

Record CTS Spectrum	
~~Evacuate Cell~~	
Fill Cell with CTS gas	[illegible]
Open cell outlet and purge cell with CTS at sampling rate (1 to 5 LPM)	1.10 LPM
Record cylinder ID Number	ALM 25384
Record CTS gas cylinder identity and concentration	20.0 ppm ethylene
Record and copy spectrum and interferogram to C-drive and back up using CTS batch file.	TG
Record Barytron pressure during collect	755.3
Record information on "Background and Calibrations" data sheet.	TG
Verify that spectrum and interferogram were copied to directories.	[illegible]
Record CTS Spectrum File Name	CTS 0712 C
Close cylinders	[illegible]
Evacuate or Purge CTS from cell using nitrogen	[illegible]
Leave cell under low nitrogen purge or under vacuum	TG
Fill MCT detector dewar	

Reviewed by: T. Geyer

Date: 7/15/99

Project No. 4951-12, 13

MIDWEST RESEARCH INSTITUTE
DAILY CHECKLIST
Shut Down Procedure

DATE: 7/13/99

OPERATOR: T. Geyer

	Initials
Purge sample from cell using ambient air or nitrogen	
Record Nitrogen Background	
Purge cell with dry nitrogen	
Verify cell is as dry as previous background	
Record ambient pressure using cell Barocell gauge	
Record nitrogen flow rate (about sampling flow rate)	
Collect Background (AQBK) under continuous flow and ambient pressure	
Record information in data book.	
Copy Background to C-drive and backup using batch file.	
Record CTS Spectrum	
Evacuate Cell	
Fill Cell with CTS gas	
Open cell outlet and purge cell with CTS at sampling rate (1 to 5 LPM)	
Record cylinder ID Number	ALM0 25384
Record CTS gas cylinder identity and concentration	20 ppm Ethylene
Record and copy spectrum and interferogram to C-drive and back up using CTS batch file.	
Record Barytron pressure during collect	754.7
Record information on "Background and Calibrations" data sheet.	
Verify that spectrum and interferogram were copied to directories.	
Record CTS Spectrum File Name	CTS0713C
Close cylinders	
Evacuate or Purge CTS from cell using nitrogen	
Leave cell under low nitrogen purge or under vacuum	
Fill MCT detector dewar	

Reviewed by: [illegible]

Date: 7/15/99

Project No. 4951-12,13

MIDWEST RESEARCH INSTITUTE
DAILY CHECKLIST
Shut Down Procedure

DATE: 7/15/99

OPERATOR: T. Geyer

	Initials
Purge sample from cell using ambient air or nitrogen	
Record Nitrogen Background	
Purge cell with dry nitrogen	
Verify cell is as dry as previous background	
Record ambient pressure using cell Barocell gauge	
Record nitrogen flow rate (about sampling flow rate)	
Collect Background (AQBK) under continuous flow and ambient pressure	
Record information in data book.	
Copy Background to C-drive and backup using batch file.	
Record CTS Spectrum	
Evacuate Cell	TJG
Fill Cell with CTS gas	TJG
Open cell outlet and purge cell with CTS at sampling rate (1 to 5 LPM)	TJG
Record cylinder ID Number	ALM025384
Record CTS gas cylinder identity and concentration	20 ppm Ethylene
Record and copy spectrum and interferogram to C-drive and back up using CTS batch file.	TJG
Record Barytron pressure during collect	TJG
Record information on "Background and Calibrations" data sheet.	TJG
Verify that spectrum and interferogram were copied to directories.	TJG
Record CTS Spectrum File Name	TJG CTS0715B
Close cylinders	TJG
Evacuate or Purge CTS from cell using nitrogen	TJG
Leave cell under low nitrogen purge or under vacuum	TJG
Fill MCT detector dewar	—

used BKG "B"

Reviewed by: TJG

Date: 7/16/99

Project No. 4951-12, 13

MIDWEST RESEARCH INSTITUTE
DAILY CHECKLIST
Shut Down Procedure

DATE: 7/16/99

OPERATOR: T. Gayer

	Initials
Purge sample from cell using ambient air or nitrogen	TG
Record Nitrogen Background	
Purge cell with dry nitrogen	
Verify cell is as dry as previous background	
Record ambient pressure using cell Barocell gauge	
Record nitrogen flow rate (about sampling flow rate) using "BK0716A"	
Collect Background (AQBK) under continuous flow and ambient pressure	
Record information in data book.	
Copy Background to C-drive and backup using batch file.	
Record CTS Spectrum	
~~Evacuate~~ purge Cell	TG
Fill Cell with CTS gas	TG
Open cell outlet and purge cell with CTS at sampling rate (1 to 5 LPM)	TG
Record cylinder ID Number	AL402538 4
Record CTS gas cylinder identity and concentration	20.0 ppm Thermo
Record and copy spectrum and interferogram to C-drive and back up using CTS batch file.	TG
Record Barytron pressure during collect	TG
Record information on "Background and Calibrations" data sheet.	TG
Verify that spectrum and interferogram were copied to directories.	TG
Record CTS Spectrum File Name	CTS0716B
Close cylinders	TG
Evacuate or Purge CTS from cell using nitrogen	TG
Leave cell under low nitrogen purge or under vacuum	TG
Fill MCT detector dewar	—

Reviewed by: T. Gayer

Date: 7/16/99

APPENDIX C

CALIBRATION GAS CERTIFICATIONS

Scott Specialty Gases

Shipped From: 6141 EASTON ROAD PO BOX 310
PLUMSTEADVILLE PA 18949-0310
Phone: 215-766-8861 Fax: 215-766-2070

CERTIFICATE OF ANALYSIS

MIDWEST RESEARCH
TOM GEYER
425 VOLKER BLVD

KANSAS CITY MO 64110

PROJECT #: 01-88514-001
PO#: 029257
ITEM #: 01021951 1AL
DATE: 3/25/97

CYLINDER #: ALM023940
FILL PRESSURE: 2000 PSIG
BLEND TYPE : GRAVIMETRIC MASTER GAS

ANALYTICAL ACCURACY: +-1%

COMPONENT	REQUESTED GAS CONC MOLES		ANALYSIS (MOLES)	
ETHYLENE	20.	PPM	20.01	PPM
NITROGEN		BALANCE		BALANCE

CERTIFIED

ANALYST: G. Kogut
GENYA KOGUT

Scott Specialty Gases

Shipped From: 1750 EAST CLUB BLVD
DURHAM NC 27704
Phone: 919-220-0803 Fax: 919-220-0808

CERTIFICATE OF ANALYSIS

MIDWEST RESEARCH
PO # 031064
425 VOLKER BLVD

KANSAS CITY MO 64110

PROJECT #: 12-24558-001
PO#: 031064
ITEM #: 12023912 4AL
DATE: 8/14/97

CYLINDER #: ALM060523
FILL PRESSURE: 600 PSIG

ANALYTICAL ACCURACY: +/- 2%

BLEND TYPE : CERTIFIED MASTER GAS

COMPONENT	REQUESTED GAS CONC MOLES		ANALYSIS (MOLES)	
TOLUENE	200.	PPM	196.6	PPM
AIR		BALANCE		BALANCE

ANALYST: B.M. Becton
B.M. BECTON

Scott Specialty Gases

Shipped From: 1290 COMBERMERE STREET
TROY MI 48083
Phone: 248-589-2950 Fax: 248-589-2134

CERTIFICATE OF ANALYSIS

MIDWEST RESEARCH
MELISSA TUCKER; # 026075
425 VOLKER BLVD

KANSAS CITY MO 64110

PROJECT #: 05-97268-002
PO#: 026075
ITEM #: 05023822 4A
DATE: 6/03/96

CYLINDER #: A7853
FILL PRESSURE: 2000 PSI

ANALYTICAL ACCURACY: +/- 2%
PRODUCT EXPIRATION: 6/03/1997

BLEND TYPE : CERTIFIED MASTER GAS

COMPONENT	REQUESTED GAS CONC MOLES		ANALYSIS (MOLES)	
SULFUR HEXAFLUORIDE	4.	PPM	4.01	PPM
NITROGEN		BALANCE		BALANCE

CERTIFIED MASTER GAS

ANALYST: Sarah Reister

APPENDIX D

TEST METHODS

D-1 EPA METHOD 320

Appendix A of part 63 is amended by adding, in numerical order, Methods 320 and 321 to read as follows:

Appendix A to Part 63-Test Methods

*****

TEST METHOD 320

MEASUREMENT OF VAPOR PHASE ORGANIC AND INORGANIC EMISSIONS BY EXTRACTIVE FOURIER TRANSFORM INFRARED (FTIR) SPECTROSCOPY

1.0 Introduction.

Persons unfamiliar with basic elements of FTIR spectroscopy should not attempt to use this method. This method describes sampling and analytical procedures for extractive emission measurements using Fourier transform infrared (FTIR) spectroscopy. Detailed analytical procedures for interpreting infrared spectra are described in the "Protocol for the Use of Extractive Fourier Transform Infrared (FTIR) Spectrometry in Analyses of Gaseous Emissions from Stationary Sources," hereafter referred to as the "Protocol." Definitions not given in this method are given in appendix A of the Protocol. References to specific sections in the Protocol are made throughout this Method. For additional information refer to references 1 and 2, and other EPA reports, which describe the use of FTIR spectrometry in specific field measurement applications and validation tests. The sampling procedure described here is

extractive. Flue gas is extracted through a heated gas transport and handling system. For some sources, sample conditioning systems may be applicable. Some examples are given in this method. Note: sample conditioning systems may be used providing the method validation requirements in Sections 9.2 and 13.0 of this method are met.

1.1 Scope and Applicability.

1.1.1 Analytes. Analytes include hazardous air pollutants (HAPs) for which EPA reference spectra have been developed. Other compounds can also be measured with this method if reference spectra are prepared according to section 4.6 of the protocol.

1.1.2 Applicability. This method applies to the analysis of vapor phase organic or inorganic compounds which absorb energy in the mid-infrared spectral region, about 400 to 4000 cm^{-1} (25 to 2.5 µm). This method is used to determine compound-specific concentrations in a multi-component vapor phase sample, which is contained in a closed-path gas cell. Spectra of samples are collected using double beam infrared absorption spectroscopy. A computer program is used to analyze spectra and report compound concentrations.

1.2 Method Range and Sensitivity. Analytical range and sensitivity depend on the frequency-dependent analyte absorptivity, instrument configuration, data collection parameters, and gas stream composition. Instrument factors

include: (a) spectral resolution, (b) interferometer signal averaging time, (c) detector sensitivity and response, and (d) absorption path length.

1.2.1 For any optical configuration the analytical range is between the absorbance values of about .01 (infrared transmittance relative to the background = 0.98) and 1.0 (T = 0.1). (For absorbance > 1.0 the relation between absorbance and concentration may not be linear.)

1.2.2 The concentrations associated with this absorbance range depend primarily on the cell path length and the sample temperature. An analyte absorbance greater than 1.0, can be lowered by decreasing the optical path length. Analyte absorbance increases with a longer path length. Analyte detection also depends on the presence of other species exhibiting absorbance in the same analytical region. Additionally, the estimated lower absorbance (A) limit (A = 0.01) depends on the root mean square deviation (RMSD) noise in the analytical region.

1.2.3 The concentration range of this method is determined by the choice of optical configuration.

1.2.3.1 The absorbance for a given concentration can be decreased by decreasing the path length or by diluting the sample. There is no practical upper limit to the measurement range.

1.2.3.2 The analyte absorbance for a given concentration

may be increased by increasing the cell path length or (to some extent) using a higher resolution. Both modifications also cause a corresponding increased absorbance for all compounds in the sample, and a decrease in the signal throughput. For this reason the practical lower detection range (quantitation limit) usually depends on sample characteristics such as moisture content of the gas, the presence of other interferants, and losses in the sampling system.

1.3 Sensitivity. The limit of sensitivity for an optical configuration and integration time is determined using appendix D of the Protocol: Minimum Analyte Uncertainty, (MAU). The MAU depends on the RMSD noise in an analytical region, and on the absorptivity of the analyte in the same region.

1.4 Data Quality. Data quality shall be determined by executing Protocol pre-test procedures in appendices B to H of the protocol and post-test procedures in appendices I and J of the protocol.

1.4.1 Measurement objectives shall be established by the choice of detection limit (DL_i) and analytical uncertainty (AU_i) for each analyte.

1.4.2 An instrumental configuration shall be selected. An estimate of gas composition shall be made based on previous test data, data from a similar source or information

gathered in a pre-test site survey. Spectral interferants shall be identified using the selected DL_i and AU_i and band areas from reference spectra and interferant spectra. The baseline noise of the system shall be measured in each analytical region to determine the MAU of the instrument configuration for each analyte and interferant (MIU_i).

1.4.3 Data quality for the application shall be determined, in part, by measuring the RMS (root mean square) noise level in each analytical spectral region (appendix C of the Protocol). The RMS noise is defined as the RMSD of the absorbance values in an analytical region from the mean absorbance value in the region.

1.4.4 The MAU is the minimum analyte concentration for which the AU_i can be maintained; if the measured analyte concentration is less than MAU_i, then data quality are unacceptable.

2.0 Summary of Method.

2.1 Principle. References 4 through 7 provide background material on infrared spectroscopy and quantitative analysis. A summary is given in this section.

2.1.1 Infrared absorption spectroscopy is performed by directing an infrared beam through a sample to a detector. The frequency-dependent infrared absorbance of the sample is measured by comparing this detector signal (single beam spectrum) to a signal obtained without a sample in the beam

path (background).

2.1.2 Most molecules absorb infrared radiation and the absorbance occurs in a characteristic and reproducible pattern. The infrared spectrum measures fundamental molecular properties and a compound can be identified from its infrared spectrum alone.

2.1.3 Within constraints, there is a linear relationship between infrared absorption and compound concentration. If this frequency dependent relationship (absorptivity) is known (measured), it can be used to determine compound concentration in a sample mixture.

2.1.4 Absorptivity is measured by preparing, in the laboratory, standard samples of compounds at known concentrations and measuring the FTIR "reference spectra" of these standard samples. These "reference spectra" are then used in sample analysis: (1) compounds are detected by matching sample absorbance bands with bands in reference spectra, and (2) concentrations are measured by comparing sample band intensities with reference band intensities.

2.1.5 This method is self-validating provided that the results meet the performance requirement of the QA spike in sections 8.6.2 and 9.0 of this method, and results from a previous method validation study support the use of this method in the application.

2.2 Sampling and Analysis. In extractive sampling a probe

assembly and pump are used to extract gas from the exhaust of the affected source and transport the sample to the FTIR gas cell. Typically, the sampling apparatus is similar to that used for single-component continuous emission monitor (CEM) measurements.

2.2.1 The digitized infrared spectrum of the sample in the FTIR gas cell is measured and stored on a computer. Absorbance band intensities in the spectrum are related to sample concentrations by what is commonly referred to as Beer's Law.

$$A_i = a_i \, b \, c_i \qquad \textbf{(1)}$$

where:

A_i = absorbance at a given frequency of the ith sample component.

a_i = absorption coefficient (absorptivity) of the ith sample component.

b = path length of the cell.

c_i = concentration of the ith sample component.

2.2.2 Analyte spiking is used for quality assurance (QA). In this procedure (section 8.6.2 of this method) an analyte is spiked into the gas stream at the back end of the sample probe. Analyte concentrations in the spiked samples are compared to analyte concentrations in unspiked samples.

Since the concentration of the spike is known, this procedure can be used to determine if the sampling system is removing the spiked analyte(s) from the sample stream.

2.3 Reference Spectra Availability. Reference spectra of over 100 HAPs are available in the EPA FTIR spectral library on the EMTIC (Emission Measurement Technical Information Center) computer bulletin board service and at internet address http://info.arnold.af.mil/epa/welcome.htm. Reference spectra for HAPs, or other analytes, may also be prepared according to section 4.6 of the Protocol.

2.4 Operator Requirements. The FTIR analyst shall be trained in setting up the instrumentation, verifying the instrument is functioning properly, and performing routine maintenance. The analyst must evaluate the initial sample spectra to determine if the sample matrix is consistent with pre-test assumptions and if the instrument configuration is suitable. The analyst must be able to modify the instrument configuration, if necessary.

2.4.1 The spectral analysis shall be supervised by someone familiar with EPA FTIR Protocol procedures.

2.4.2 A technician trained in instrumental test methods is qualified to install and operate the sampling system. This includes installing the probe and heated line assembly, operating the analyte spike system, and performing moisture and flow measurements.

3.0 Definitions.

See appendix A of the Protocol for definitions relating to infrared spectroscopy. Additional definitions are given in sections 3.1 through 3.29.

3.1 Analyte. A compound that this method is used to measure. The term "target analyte" is also used. This method is multi-component and a number of analytes can be targeted for a test.

3.2 Reference Spectrum. Infrared spectrum of an analyte prepared under controlled, documented, and reproducible laboratory conditions according to procedures in section 4.6 of the Protocol. A library of reference spectra is used to measure analytes in gas samples.

3.3 Standard Spectrum. A spectrum that has been prepared from a reference spectrum through a (documented) mathematical operation. A common example is de-resolving of reference spectra to lower-resolution standard spectra (Protocol, appendix K to the addendum of this method). Standard spectra, prepared by approved, and documented, procedures can be used as reference spectra for analysis.

3.4 Concentration. In this method concentration is expressed as a molar concentration, in ppm-meters, or in (ppm-meters)/K, where K is the absolute temperature (Kelvin). The latter units allow the direct comparison of concentrations from systems using different optical

configurations or sampling temperatures.

3.5 Interferant. A compound in the sample matrix whose infrared spectrum overlaps with part of an analyte spectrum. The most accurate analyte measurements are achieved when reference spectra of interferants are used in the quantitative analysis with the analyte reference spectra. The presence of an interferant can increase the analytical uncertainty in the measured analyte concentration.

3.6 Gas Cell. A gas containment cell that can be evacuated. It is equipped with the optical components to pass the infrared beam through the sample to the detector. Important cell features include: path length (or range if variable), temperature range, materials of construction, and total gas volume.

3.7 Sampling System. Equipment used to extract the sample from the test location and transport the sample gas to the FTIR analyzer. This includes sample conditioning systems.

3.8 Sample Analysis. The process of interpreting the infrared spectra to obtain sample analyte concentrations. This process is usually automated using a software routine employing a classical least squares (cls), partial least squares (pls), or K- or P- matrix method.

3.9 One hundred percent line. A double beam transmittance spectrum obtained by combining two background single beam spectra. Ideally, this line is equal to 100 percent

transmittance (or zero absorbance) at every frequency in the spectrum. Practically, a zero absorbance line is used to measure the baseline noise in the spectrum.

3.10 Background Deviation. A deviation from 100 percent transmittance in any region of the 100 percent line. Deviations greater than ± 5 percent in an analytical region are unacceptable (absorbance of 0.021 to -0.022). Such deviations indicate a change in the instrument throughput relative to the background single beam.

3.11 Batch Sampling. A procedure where spectra of discreet, static samples are collected. The gas cell is filled with sample and the cell is isolated. The spectrum is collected. Finally, the cell is evacuated to prepare for the next sample.

3.12 Continuous Sampling. A procedure where spectra are collected while sample gas is flowing through the cell at a measured rate.

3.13 Sampling resolution. The spectral resolution used to collect sample spectra.

3.14 Truncation. Limiting the number of interferogram data points by deleting points farthest from the center burst (zero path difference, ZPD).

3.15 Zero filling. The addition of points to the interferogram. The position of each added point is interpolated from neighboring real data points. Zero

filling adds no information to the interferogram, but affects line shapes in the absorbance spectrum (and possibly analytical results).

3.16 Reference CTS. Calibration Transfer Standard spectra that were collected with reference spectra.

3.17 CTS Standard. CTS spectrum produced by applying a de-resolution procedure to a reference CTS.

3.18 Test CTS. CTS spectra collected at the sampling resolution using the same optical configuration as for sample spectra. Test spectra help verify the resolution, temperature and path length of the FTIR system.

3.19 RMSD. Root Mean Square Difference, defined in EPA FTIR Protocol, appendix A.

3.20 Sensitivity. The noise-limited compound-dependent detection limit for the FTIR system configuration. This is estimated by the MAU. It depends on the RMSD in an analytical region of a zero absorbance line.

3.21 Quantitation Limit. The lower limit of detection for the FTIR system configuration in the sample spectra. This is estimated by mathematically subtracting scaled reference spectra of analytes and interferences from sample spectra, then measuring the RMSD in an analytical region of the subtracted spectrum. Since the noise in subtracted sample spectra may be much greater than in a zero absorbance spectrum, the quantitation limit is generally much higher

than the sensitivity. Removing spectral interferences from the sample or improving the spectral subtraction can lower the quantitation limit toward (but not below) the sensitivity.

3.22 Independent Sample. A unique volume of sample gas; there is no mixing of gas between two consecutive independent samples. In continuous sampling two independent samples are separated by at least 5 cell volumes. The interval between independent measurements depends on the cell volume and the sample flow rate (through the cell).

3.23 Measurement. A single spectrum of flue gas contained in the FTIR cell.

3.24 Run. A run consists of a series of measurements. At a minimum a run includes 8 independent measurements spaced over 1 hour.

3.25 Validation. Validation of FTIR measurements is described in sections 13.0 through 13.4 of this method. Validation is used to verify the test procedures for measuring specific analytes at a source. Validation provides proof that the method works under certain test conditions.

3.26 Validation Run. A validation run consists of at least 24 measurements of independent samples. Half of the samples are spiked and half are not spiked. The length of the run is determined by the interval between independent samples.

3.27 Screening. Screening is used when there is little or no available information about a source. The purpose of screening is to determine what analytes are emitted and to obtain information about important sample characteristics such as moisture, temperature, and interferences. Screening results are semi-quantitative (estimated concentrations) or qualitative (identification only). Various optical and sampling configurations may be used. Sample conditioning systems may be evaluated for their effectiveness in removing interferences. It is unnecessary to perform a complete run under any set of sampling conditions. Spiking is not necessary, but spiking can be a useful screening tool for evaluating the sampling system, especially if a reactive or soluble analyte is used for the spike.

3.28 Emissions Test. An FTIR emissions test is performed according specific sampling and analytical procedures. These procedures, for the target analytes and the source, are based on previous screening and validation results. Emission results are quantitative. A QA spike (sections 8.6.2 and 9.2 of this method) is performed under each set of sampling conditions using a representative analyte. Flow, gas temperature and diluent data are recorded concurrently with the FTIR measurements to provide mass emission rates for detected compounds.

3.29 Surrogate. A surrogate is a compound that is used in

a QA spike procedure (section 8.6.2 of this method) to represent other compounds. The chemical and physical properties of a surrogate shall be similar to the compounds it is chosen to represent. Under given sampling conditions, usually a single sampling factor is of primary concern for measuring the target analytes: for example, the surrogate spike results can be representative for analytes that are more reactive, more soluble, have a lower absorptivity, or have a lower vapor pressure than the surrogate itself.

4.0 Interferences.

Interferences are divided into two classifications: analytical and sampling.

4.1 Analytical Interferences. An analytical interference is a spectral feature that complicates (in extreme cases may prevent) the analysis of an analyte. Analytical interferences are classified as background or spectral interference.

4.1.1 Background Interference. This results from a change in throughput relative to the single beam background. It is corrected by collecting a new background and proceeding with the test. In severe instances the cause must be identified and corrected. Potential causes include: (1) deposits on reflective surfaces or transmitting windows, (2) changes in detector sensitivity, (3) a change in the infrared source output, or (4) failure in the instrument electronics. In

routine sampling throughput may degrade over several hours. Periodically a new background must be collected, but no other corrective action will be required.

4.1.2 Spectral Interference. This results from the presence of interfering compound(s) (interferant) in the sample. Interferant spectral features overlap analyte spectral features. Any compound with an infrared spectrum, including analytes, can potentially be an interferant. The Protocol measures absorbance band overlap in each analytical region to determine if potential interferants shall be classified as known interferants (FTIR Protocol, section 4.9 and appendix B). Water vapor and CO_2 are common spectral interferants. Both of these compounds have strong infrared spectra and are present in many sample matrices at high concentrations relative to analytes. The extent of interference depends on the (1) interferant concentration, (2) analyte concentration, and (3) the degree of band overlap. Choosing an alternate analytical region can minimize or avoid the spectral interference. For example, CO_2 interferes with the analysis of the 670 cm^{-1} benzene band. However, benzene can also be measured near 3000 cm^{-1} (with less sensitivity).

4.2 Sampling System Interferences. These prevent analytes from reaching the instrument. The analyte spike procedure is designed to measure sampling system interference, if any.

4.2.1 Temperature. A temperature that is too low causes condensation of analytes or water vapor. The materials of the sampling system and the FTIR gas cell usually set the upper limit of temperature.

4.2.2 Reactive Species. Anything that reacts with analytes. Some analytes, like formaldehyde, polymerize at lower temperatures.

4.2.3 Materials. Poor choice of material for probe, or sampling line may remove some analytes. For example, HF reacts with glass components.

4.2.4 Moisture. In addition to being a spectral interferant, condensed moisture removes soluble compounds.

5.0 Safety.

The hazards of performing this method are those associated with any stack sampling method and the same precautions shall be followed. Many HAPs are suspected carcinogens or present other serious health risks. Exposure to these compounds should be avoided in all circumstances. For instructions on the safe handling of any particular compound, refer to its material safety data sheet. When using analyte standards, always ensure that gases are properly vented and that the gas handling system is leak free. (Always perform a leak check with the system under maximum vacuum and, again, with the system at greater than ambient pressure.) Refer to section 8.2 of this method for

leak check procedures. This method does not address all of the potential safety risks associated with its use. Anyone performing this method must follow safety and health practices consistent with applicable legal requirements and with prudent practice for each application.

6.0 Equipment and Supplies.

Note: Mention of trade names or specific products does not constitute endorsement by the Environmental Protection Agency.

The equipment and supplies are based on the schematic of a sampling system shown in Figure 1. Either the batch or continuous sampling procedures may be used with this sampling system. Alternative sampling configurations may also be used, provided that the data quality objectives are met as determined in the post-analysis evaluation. Other equipment or supplies may be necessary, depending on the design of the sampling system or the specific target analytes.

6.1 Sampling Probe. Glass, stainless steel, or other appropriate material of sufficient length and physical integrity to sustain heating, prevent adsorption of analytes, and to transport analytes to the infrared gas cell. Special materials or configurations may be required in some applications. For instance, high stack sample temperatures may require special steel or cooling the probe.

For very high moisture sources it may be desirable to use a dilution probe.

6.2 Particulate Filters. A glass wool plug (optional) inserted at the probe tip (for large particulate removal) and a filter (required) rated for 99 percent removal efficiency at 1-micron (e.g., Balston™) connected at the outlet of the heated probe.

6.3 Sampling Line/Heating System. Heated (sufficient to prevent condensation) stainless steel, polytetrafluoroethane, or other material inert to the analytes.

6.4 Gas Distribution Manifold. A heated manifold allowing the operator to control flows of gas standards and samples directly to the FTIR system or through sample conditioning systems. Usually includes heated flow meter, heated valve for selecting and sending sample to the analyzer, and a by-pass vent. This is typically constructed of stainless steel tubing and fittings, and high-temperature valves.

6.5 Stainless Steel Tubing. Type 316, appropriate diameter (e.g., 3/8 in.) and length for heated connections. Higher grade stainless may be desirable in some applications.

6.6 Calibration/Analyte Spike Assembly. A three way valve assembly (or equivalent) to introduce analyte or surrogate spikes into the sampling system at the outlet of the probe upstream of the out-of-stack particulate filter and the FTIR

analytical system.

6.7 Mass Flow Meter (MFM). These are used for measuring analyte spike flow. The MFM shall be calibrated in the range of 0 to 5 L/min and be accurate to ± 2 percent (or better) of the flow meter span.

6.8 Gas Regulators. Appropriate for individual gas standards.

6.9 Polytetrafluoroethane Tubing. Diameter (e.g., 3/8 in.) and length suitable to connect cylinder regulators to gas standard manifold.

6.10 Sample Pump. A leak-free pump (e.g., KNF™), with by-pass valve, capable of producing a sample flow rate of at least 10 L/min through 100 ft of sample line. If the pump is positioned upstream of the distribution manifold and FTIR system, use a heated pump that is constructed from materials non-reactive to the analytes. If the pump is located downstream of the FTIR system, the gas cell sample pressure will be lower than ambient pressure and it must be recorded at regular intervals.

6.11 Gas Sample Manifold. Secondary manifold to control sample flow at the inlet to the FTIR manifold. This is optional, but includes a by-pass vent and heated rotameter.

6.12 Rotameter. A 0 to 20 L/min rotameter. This meter need not be calibrated.

6.13 FTIR Analytical System. Spectrometer and detector,

capable of measuring the analytes to the chosen detection limit. The system shall include a personal computer with compatible software allowing automated collection of spectra.

6.14 FTIR Cell Pump. Required for the batch sampling technique, capable of evacuating the FTIR cell volume within 2 minutes. The pumping speed shall allow the operator to obtain 8 sample spectra in 1 hour.

6.15 Absolute Pressure Gauge. Capable of measuring pressure from 0 to 1000 mmHg to within ± 2.5 mmHg (e.g., Baratron™).

6.16 Temperature Gauge. Capable of measuring the cell temperature to within ± 2°C.

6.17 Sample Conditioning. One option is a condenser system, which is used for moisture removal. This can be helpful in the measurement of some analytes. Other sample conditioning procedures may be devised for the removal of moisture or other interfering species.

6.17.1 The analyte spike procedure of section 9.2 of this method, the QA spike procedure of section 8.6.2 of this method, and the validation procedure of section 13 of this method demonstrate whether the sample conditioning affects analyte concentrations. Alternatively, measurements can be made with two parallel FTIR systems; one measuring conditioned sample, the other measuring unconditioned

sample.

6.17.2 Another option is sample dilution. The dilution factor measurement must be documented and accounted for in the reported concentrations. An alternative to dilution is to lower the sensitivity of the FTIR system by decreasing the cell path length, or to use a short-path cell in conjunction with a long path cell to measure more than one concentration range.

7.0 Reagents and Standards.

7.1 Analyte(s) and Tracer Gas. Obtain a certified gas cylinder mixture containing all of the analyte(s) at concentrations within ± 2 percent of the emission source levels (expressed in ppm-meter/K). If practical, the analyte standard cylinder shall also contain the tracer gas at a concentration which gives a measurable absorbance at a dilution factor of at least 10:1. Two ppm SF_6 is sufficient for a path length of 22 meters at 250 °F.

7.2 Calibration Transfer Standard(s). Select the calibration transfer standards (CTS) according to section 4.5 of the FTIR Protocol. Obtain a National Institute of Standards and Technology (NIST) traceable gravimetric standard of the CTS (± 2 percent).

7.3 Reference Spectra. Obtain reference spectra for each analyte, interferant, surrogate, CTS, and tracer. If EPA reference spectra are not available, use reference spectra

prepared according to procedures in section 4.6 of the EPA FTIR Protocol.

8.0 Sampling and Analysis Procedure.

Three types of testing can be performed: (1) screening, (2) emissions test, and (3) validation. Each is defined in section 3 of this method. Determine the purpose(s) of the FTIR test. Test requirements include: (a) AU_i, DL_i, overall fractional uncertainty, OFU_i, maximum expected concentration ($CMAX_i$), and t_{AN} for each, (b) potential interferants, (c) sampling system factors, e.g., minimum absolute cell pressure, (P_{min}), FTIR cell volume (V_{SS}), estimated sample absorption pathlength, L_s', estimated sample pressure, P_s', T_s', signal integration time (t_{SS}), minimum instrumental linewidth, MIL, fractional error, and (d) analytical regions, e.g., m = 1 to M, lower wavenumber position, FL_m, center wavenumber position, FC_m, and upper wavenumber position, FU_m, plus interferants, upper wavenumber position of the CTS absorption band, FFU_m, lower wavenumber position of the CTS absorption band, FFL_m, wavenumber range FNU to FNL. If necessary, sample and acquire an initial spectrum. From analysis of this preliminary spectrum determine a suitable operational path length. Set up the sampling train as shown in Figure 1 or use an appropriate alternative configuration. Sections 8.1 through 8.11 of this method provide guidance on pre-test calculations in the EPA

protocol, sampling and analytical procedures, and post-test protocol calculations.

8.1 Pretest Preparations and Evaluations. Using the procedure in section 4.0 of the FTIR Protocol, determine the optimum sampling system configuration for measuring the target analytes. Use available information to make reasonable assumptions about moisture content and other interferences.

8.1.1 Analytes. Select the required detection limit (DL_i) and the maximum permissible analytical uncertainty (AU_i) for each analyte (labeled from 1 to i). Estimate, if possible, the maximum expected concentration for each analyte, $CMAX_i$. The expected measurement range is fixed by DL_i and $CMAX_i$ for each analyte (i).

8.1.2 Potential Interferants. List the potential interferants. This usually includes water vapor and CO_2, but may also include some analytes and other compounds.

8.1.3. Optical Configuration. Choose an optical configuration that can measure all of the analytes within the absorbance range of .01 to 1.0 (this may require more than one path length). Use Protocol sections 4.3 to 4.8 for guidance in choosing a configuration and measuring CTS.

8.1.4. Fractional Reproducibility Uncertainty (FRU_i). The FRU is determined for each analyte by comparing CTS spectra taken before and after the reference spectra were measured.

The EPA para-xylene reference spectra were collected on 10/31/91 and 11/01/91 with corresponding CTS spectra "cts1031a," and "cts1101b." The CTS spectra are used to estimate the reproducibility (FRU) in the system that was used to collect the references. The FRU must be < AU. Appendix E of the protocol is used to calculate the FRU from CTS spectra. Figure 2 plots results for 0.25 cm^{-1} CTS spectra in EPA reference library: S_3 (cts1101b - cts1031a), and S_4 [(cts1101b + cts1031a)/2]. The RMSD (SRMS) is calculated in the subtracted baseline, S_3, in the corresponding CTS region from 850 to 1065 cm^{-1}. The area (BAV) is calculated in the same region of the averaged CTS spectrum, S_4.

8.1.5 Known Interferants. Use appendix B of the EPA FTIR Protocol.

8.1.6 Calculate the Minimum Analyte Uncertainty, MAU (section 1.3 of this method discusses MAU and protocol appendix D gives the MAU procedure). The MAU for each analyte, i, and each analytical region, m, depends on the RMS noise.

8.1.7 Analytical Program. See FTIR Protocol, section 4.10. Prepare computer program based on the chosen analytical technique. Use as input reference spectra of all target analytes and expected interferants. Reference spectra of additional compounds shall also be included in the program

if their presence (even if transient) in the samples is considered possible. The program output shall be in ppm (or ppb) and shall be corrected for differences between the reference path length, L_R, temperature, T_R, and pressure, P_R, and the conditions used for collecting the sample spectra. If sampling is performed at ambient pressure, then any pressure correction is usually small relative to corrections for path length and temperature, and may be neglected.

8.2 Leak-check.

8.2.1 Sampling System. A typical FTIR extractive sampling train is shown in Figure 1. Leak check from the probe tip to pump outlet as follows: Connect a 0- to 250-mL/min rate meter (rotameter or bubble meter) to the outlet of the pump. Close off the inlet to the probe, and record the leak rate. The leak rate shall be ≤ 200 mL/min.

8.2.2 Analytical System Leak check. Leak check the FTIR cell under vacuum and under pressure (greater than ambient). Leak check connecting tubing and inlet manifold under pressure.

8.2.2.1 For the evacuated sample technique, close the valve to the FTIR cell, and evacuate the absorption cell to the minimum absolute pressure P_{min}. Close the valve to the pump, and determine the change in pressure ΔP_v after 2 minutes.

8.2.2.2 For both the evacuated sample and purging techniques, pressurize the system to about 100 mmHg above

atmospheric pressure. Isolate the pump and determine the change in pressure ΔP_p after 2 minutes.

8.2.2.3 Measure the barometric pressure, P_b in mmHg.

8.2.2.4 Determine the percent leak volume $\%V_L$ for the signal integration time t_{SS} and for ΔP_{max}, i.e., the larger of ΔP_v or ΔP_p, as follows:

$$\%V_L = 50\, t_{SS} \frac{\Delta P_{max}}{P_{SS}} \qquad \textbf{(2)}$$

where 50 = 100% divided by the leak-check time of 2 minutes.

8.2.2.5 Leak volumes in excess of 4 percent of the FTIR system volume V_{SS} are unacceptable.

8.3 Detector Linearity. Once an optical configuration is chosen, use one of the procedures of sections 8.3.1 through 8.3.3 to verify that the detector response is linear. If the detector response is not linear, decrease the aperture, or attenuate the infrared beam. After a change in the instrument configuration perform a linearity check until it is demonstrated that the detector response is linear.

8.3.1 Vary the power incident on the detector by modifying the aperture setting. Measure the background and CTS at three instrument aperture settings: (1) at the aperture setting to be used in the testing, (2) at one half this aperture and (3) at twice the proposed testing aperture.

Compare the three CTS spectra. CTS band areas shall agree to within the uncertainty of the cylinder standard and the RMSD noise in the system. If test aperture is the maximum aperture, collect CTS spectrum at maximum aperture, then close the aperture to reduce the IR throughput by half. Collect a second background and CTS at the smaller aperture setting and compare the spectra again.

8.3.2 Use neutral density filters to attenuate the infrared beam. Set up the FTIR system as it will be used in the test measurements. Collect a CTS spectrum. Use a neutral density filter to attenuate the infrared beam (either immediately after the source or the interferometer) to approximately 1/2 its original intensity. Collect a second CTS spectrum. Use another filter to attenuate the infrared beam to approximately 1/4 its original intensity. Collect a third background and CTS spectrum. Compare the CTS spectra. CTS band areas shall agree to within the uncertainty of the cylinder standard and the RMSD noise in the system.

8.3.3 Observe the single beam instrument response in a frequency region where the detector response is known to be zero. Verify that the detector response is "flat" and equal to zero in these regions.

8.4 Data Storage Requirements. All field test spectra shall be stored on a computer disk and a second backup copy must stored on a separate disk. The stored information

includes sample interferograms, processed absorbance spectra, background interferograms, CTS sample interferograms and CTS absorbance spectra. Additionally, documentation of all sample conditions, instrument settings, and test records must be recorded on hard copy or on computer medium. Table 1 gives a sample presentation of documentation.

8.5 Background Spectrum. Evacuate the gas cell to ≤ 5 mmHg, and fill with dry nitrogen gas to ambient pressure (or purge the cell with 10 volumes of dry nitrogen). Verify that no significant amounts of absorbing species (for example water vapor and CO_2) are present. Collect a background spectrum, using a signal averaging period equal to or greater than the averaging period for the sample spectra. Assign a unique file name to the background spectrum. Store two copies of the background interferogram and processed single-beam spectrum on separate computer disks (one copy is the back-up).

8.5.1 Interference Spectra. If possible, collect spectra of known and suspected major interferences using the same optical system that will be used in the field measurements. This can be done on-site or earlier. A number of gases, e.g. CO_2, SO_2, CO, NH_3, are readily available from cylinder gas suppliers.

8.5.2 Water vapor spectra can be prepared by the following

procedure. Fill a sample tube with distilled water. Evacuate above the sample and remove dissolved gasses by alternately freezing and thawing the water while evacuating. Allow water vapor into the FTIR cell, then dilute to atmospheric pressure with nitrogen or dry air. If quantitative water spectra are required, follow the reference spectrum procedure for neat samples (protocol, section 4.6). Often, interference spectra need not be quantitative, but for best results the absorbance must be comparable to the interference absorbance in the sample spectra.

8.6 Pre-Test Calibrations

8.6.1 Calibration Transfer Standard. Evacuate the gas cell to ≤ 5 mmHg absolute pressure, and fill the FTIR cell to atmospheric pressure with the CTS gas. Alternatively, purge the cell with 10 cell volumes of CTS gas. (If purge is used, verify that the CTS concentration in the cell is stable by collecting two spectra 2 minutes apart as the CTS gas continues to flow. If the absorbance in the second spectrum is no greater than in the first, within the uncertainty of the gas standard, then this can be used as the CTS spectrum.) Record the spectrum.

8.6.2 QA Spike. This procedure assumes that the method has been validated for at least some of the target analytes at the source. For emissions testing perform a QA spike. Use

a certified standard, if possible, of an analyte, which has been validated at the source. One analyte standard can serve as a QA surrogate for other analytes which are less reactive or less soluble than the standard. Perform the spike procedure of section 9.2 of this method. Record spectra of at least three independent (section 3.22 of this method) spiked samples. Calculate the spiked component of the analyte concentration. If the average spiked concentration is within 0.7 to 1.3 times the expected concentration, then proceed with the testing. If applicable, apply the correction factor from the Method 301 of this appendix validation test (not the result from the QA spike).

8.7 Sampling. If analyte concentrations vary rapidly with time, continuous sampling is preferable using the smallest cell volume, fastest sampling rate and fastest spectra collection rate possible. Continuous sampling requires the least operator intervention even without an automated sampling system. For continuous monitoring at one location over long periods, Continuous sampling is preferred. Batch sampling and continuous static sampling are used for screening and performing test runs of finite duration. Either technique is preferred for sampling several locations in a matter of days. Batch sampling gives reasonably good time resolution and ensures that each spectrum measures a

discreet (and unique) sample volume. Continuous static (and continuous) sampling provide a very stable background over long periods. Like batch sampling, continuous static sampling also ensures that each spectrum measures a unique sample volume. It is essential that the leak check procedure under vacuum (section 8.2 of this method) is passed if the batch sampling procedure is used. It is essential that the leak check procedure under positive pressure is passed if the continuous static or continuous sampling procedures are used. The sampling techniques are described in sections 8.7.1 through 8.7.2 of this method.

8.7.1 Batch Sampling. Evacuate the absorbance cell to ≤ 5 mmHg absolute pressure. Fill the cell with exhaust gas to ambient pressure, isolate the cell, and record the spectrum. Before taking the next sample, evacuate the cell until no spectral evidence of sample absorption remains. Repeat this procedure to collect eight spectra of separate samples in 1 hour.

8.7.2 Continuous Static Sampling. Purge the FTIR cell with 10 cell volumes of sample gas. Isolate the cell, collect the spectrum of the static sample and record the pressure. Before measuring the next sample, purge the cell with 10 more cell volumes of sample gas.

8.8 Sampling QA and Reporting.

8.8.1 Sample integration times shall be sufficient to

achieve the required signal-to-noise ratio. Obtain an absorbance spectrum by filling the cell with N_2. Measure the RMSD in each analytical region in this absorbance spectrum. Verify that the number of scans used is sufficient to achieve the target MAU.

8.8.2 Assign a unique file name to each spectrum.

8.8.3 Store two copies of sample interferograms and processed spectra on separate computer disks.

8.8.4 For each sample spectrum, document the sampling conditions, the sampling time (while the cell was being filled), the time the spectrum was recorded, the instrumental conditions (path length, temperature, pressure, resolution, signal integration time), and the spectral file name. Keep a hard copy of these data sheets.

8.9 Signal Transmittance. While sampling, monitor the signal transmittance. If signal transmittance (relative to the background) changes by 5 percent or more (absorbance = -.02 to .02) in any analytical spectral region, obtain a new background spectrum.

8.10 Post-test CTS. After the sampling run, record another CTS spectrum.

8.11 Post-test QA.

8.11.1 Inspect the sample spectra immediately after the run to verify that the gas matrix composition was close to the expected (assumed) gas matrix.

8.11.2 Verify that the sampling and instrumental parameters were appropriate for the conditions encountered. For example, if the moisture is much greater than anticipated, it may be necessary to use a shorter path length or dilute the sample.

8.11.3 Compare the pre- and post-test CTS spectra. The peak absorbance in pre- and post-test CTS must be ± 5 percent of the mean value. See appendix E of the FTIR Protocol.

9.0 Quality Control.

Use analyte spiking (sections 8.6.2, 9.2 and 13.0 of this method) to verify that the sampling system can transport the analytes from the probe to the FTIR system.

9.1 Spike Materials. Use a certified standard (accurate to ± 2 percent) of the target analyte, if one can be obtained. If a certified standard cannot be obtained, follow the procedures in section 4.6.2.2 of the FTIR Protocol.

9.2 Spiking Procedure. QA spiking (section 8.6.2 of this method) is a calibration procedure used before testing. QA spiking involves following the spike procedure of sections 9.2.1 through 9.2.3 of this method to obtain at least three spiked samples. The analyte concentrations in the spiked samples shall be compared to the expected spike concentration to verify that the sampling/analytical system is working properly. Usually, when QA spiking is used, the

method has already been validated at a similar source for the analyte in question. The QA spike demonstrates that the validated sampling/analytical conditions are being duplicated. If the QA spike fails then the sampling/analytical system shall be repaired before testing proceeds. The method validation procedure (section 13.0 of this method) involves a more extensive use of the analyte spike procedure of sections 9.2.1 through 9.2.3 of this method. Spectra of at least 12 independent spiked and 12 independent unspiked samples are recorded. The concentration results are analyzed statistically to determine if there is a systematic bias in the method for measuring a particular analyte. If there is a systematic bias, within the limits allowed by Method 301 of this appendix, then a correction factor shall be applied to the analytical results. If the systematic bias is greater than the allowed limits, this method is not valid and cannot be used.

9.2.1 Introduce the spike/tracer gas at a constant flow rate of ≤ 10 percent of the total sample flow, when possible. (Note: Use the rotameter at the end of the sampling train to estimate the required spike/tracer gas flow rate.) Use a flow device, e.g., mass flow meter (± 2 percent), to monitor the spike flow rate. Record the spike flow rate every 10 minutes.

9.2.2 Determine the response time (RT) of the system by continuously collecting spectra of the spiked effluent until the spectrum of the spiked component is constant for 5 minutes. The RT is the interval from the first measurement until the spike becomes constant. Wait for twice the duration of the RT, then collect spectra of two independent spiked gas samples. Duplicate analyses of the spiked concentration shall be within 5 percent of the mean of the two measurements.

9.2.3 Calculate the dilution ratio using the tracer gas as follows:

$$DF = \frac{SF_{6(spk)}}{SF_{6(dir)}} \quad \textbf{(3)}$$

where:

$$CS = DF * Spike_{dir} + Unspike(1-DF) \quad \textbf{(4)}$$

DF = Dilution factor of the spike gas; this value shall be ≥10.

$SF_{6(dir)}$ = SF_6 (or tracer gas) concentration measured directly in undiluted spike gas.

$SF_{6(spk)}$ = Diluted SF_6 (or tracer gas) concentration measured in a spiked sample.

$Spike_{dir}$ = Concentration of the analyte in the spike standard measured by filling the FTIR cell directly.

CS = Expected concentration of the spiked samples.

Unspike = Native concentration of analytes in unspiked samples

10.0 Calibration and Standardization.

10.1 Signal-to-Noise Ratio (S/N). The RMSD in the noise must be less than one tenth of the minimum analyte peak absorbance in each analytical region. For example if the minimum peak absorbance is 0.01 at the required DL, then RMSD measured over the entire analytical region must be $\leq$ 0.001.

10.2 Absorbance Path length. Verify the absorbance path length by comparing reference CTS spectra to test CTS spectra. See appendix E of the FTIR Protocol.

10.3 Instrument Resolution. Measure the line width of appropriate test CTS band(s) to verify instrument resolution. Alternatively, compare CTS spectra to a reference CTS spectrum, if available, measured at the nominal resolution.

10.4 Apodization Function. In transforming the sample interferograms to absorbance spectra use the same

apodization function that was used in transforming the reference spectra.

10.5 FTIR Cell Volume. Evacuate the cell to ≤ 5 mmHg. Measure the initial absolute temperature (T_i) and absolute pressure (P_i). Connect a wet test meter (or a calibrated dry gas meter), and slowly draw room air into the cell. Measure the meter volume (V_m), meter absolute temperature (T_m), and meter absolute pressure (P_m); and the cell final absolute temperature (T_f) and absolute pressure (P_f). Calculate the FTIR cell volume V_{ss}, including that of the connecting tubing, as follows:

$$V_{SS} = \frac{V_m \frac{P_m}{T_m}}{\left[\frac{P_f}{T_f} - \frac{P_i}{T_i}\right]} \qquad \textbf{(5)}$$

11.0 Data Analysis and Calculations.

Analyte concentrations shall be measured using reference spectra from the EPA FTIR spectral library. When EPA library spectra are not available, the procedures in section 4.6 of the Protocol shall be followed to prepare reference spectra of all the target analytes.

11.1 Spectral De-resolution. Reference spectra can be converted to lower resolution standard spectra (section 3.3

of this method) by truncating the original reference sample and background interferograms. Appendix K of the FTIR Protocol gives specific deresolution procedures. Deresolved spectra shall be transformed using the same apodization function and level of zero filling as the sample spectra. Additionally, pre-test FTIR protocol calculations (e.g., FRU, MAU, FCU) shall be performed using the de-resolved standard spectra.

11.2 Data Analysis. Various analytical programs are available for relating sample absorbance to a concentration standard. Calculated concentrations shall be verified by analyzing residual baselines after mathematically subtracting scaled reference spectra from the sample spectra. A full description of the data analysis and calculations is contained in the FTIR Protocol (sections 4.0, 5.0, 6.0 and appendices). Correct the calculated concentrations in the sample spectra for differences in absorption path length and temperature between the reference and sample spectra using equation 6,

$$C_{corr} = \left(\frac{L_r}{L_s}\right)\left(\frac{T_s}{T_r}\right)\left(\frac{P_r}{P_s}\right) C_{calc} \qquad \textbf{(6)}$$

where:

C_{corr} = Concentration, corrected for path length.

C_{calc} = Concentration, initial calculation (output of the analytical program designed for the compound).

L_r = Reference spectra path length.

L_s = Sample spectra path length.

T_s = Absolute temperature of the sample gas, K.

T_r = Absolute gas temperature of reference spectra, K.

P_s = Sample cell pressure.

P_r = Reference spectrum sample pressure.

12.0 Method Performance.

12.1 Spectral Quality. Refer to the FTIR Protocol appendices for analytical requirements, evaluation of data quality, and analysis of uncertainty.

12.2 Sampling QA/QC. The analyte spike procedure of section 9 of this method, the QA spike of section 8.6.2 of this method, and the validation procedure of section 13 of this method are used to evaluate the performance of the sampling system and to quantify sampling system effects, if any, on the measured concentrations. This method is self-validating provided that the results meet the performance requirement of the QA spike in sections 9.0 and 8.6.2 of this method and results from a previous method validation study support the use of this method in the application. Several factors can contribute to uncertainty in the measurement of spiked samples. Factors which can be controlled to provide better accuracy in the spiking procedure are listed in sections 12.2.1 through 12.2.4 of this method.

12.2.1 Flow meter. An accurate mass flow meter is accurate to ± 1 percent of its span. If a flow of 1 L/min is monitored with such a MFM, which is calibrated in the range of 0-5 L/min, the flow measurement has an uncertainty of 5 percent. This may be improved by re-calibrating the meter at the specific flow rate to be used.

12.2.2 Calibration gas. Usually the calibration standard is certified to within ± 2 percent. With reactive analytes, such as HCl, the certified accuracy in a commercially available standard may be no better than ± 5 percent.

12.2.3 Temperature. Temperature measurements of the cell shall be quite accurate. If practical, it is preferable to measure sample temperature directly, by inserting a thermocouple into the cell chamber instead of monitoring the cell outer wall temperature.

12.2.4 Pressure. Accuracy depends on the accuracy of the barometer, but fluctuations in pressure throughout a day may be as much as 2.5 percent due to weather variations.

13.0 Method Validation Procedure.

This validation procedure, which is based on EPA Method 301 (40 CFR part 63, appendix A), may be used to validate this method for the analytes in a gas matrix. Validation at one source may also apply to another type of source, if it can be shown that the exhaust gas characteristics are similar at both sources.

13.1 Section 5.3 of Method 301 (40 CFR part 63, appendix A), the Analyte Spike procedure, is used with these modifications. The statistical analysis of the results follows section 6.3 of EPA Method 301. Section 3 of this method defines terms that are not defined in Method 301.

13.1.1 The analyte spike is performed dynamically. This means the spike flow is continuous and constant as spiked samples are measured.

13.1.2 The spike gas is introduced at the back of the sample probe.

13.1.3 Spiked effluent is carried through all sampling components downstream of the probe.

13.1.4 A single FTIR system (or more) may be used to collect and analyze spectra (not quadruplicate integrated sampling trains).

13.1.5 All of the validation measurements are performed sequentially in a single "run" (section 3.26 of this method).

13.1.6 The measurements analyzed statistically are each independent (section 3.22 of this method).

13.1.7 A validation data set can consist of more than 12 spiked and 12 unspiked measurements.

13.2 Batch Sampling. The procedure in sections 13.2.1 through 13.2.2 may be used for stable processes. If process emissions are highly variable, the procedure in section

13.2.3 shall be used.

13.2.1 With a single FTIR instrument and sampling system, begin by collecting spectra of two unspiked samples. Introduce the spike flow into the sampling system and allow 10 cell volumes to purge the sampling system and FTIR cell. Collect spectra of two spiked samples. Turn off the spike and allow 10 cell volumes of unspiked sample to purge the FTIR cell. Repeat this procedure until the 24 (or more) samples are collected.

13.2.2 In batch sampling, collect spectra of 24 distinct samples. (Each distinct sample consists of filling the cell to ambient pressure after the cell has been evacuated.)

13.2.3 Alternatively, a separate probe assembly, line, and sample pump can be used for spiked sample. Verify and document that sampling conditions are the same in both the spiked and the unspiked sampling systems. This can be done by wrapping both sample lines in the same heated bundle. Keep the same flow rate in both sample lines. Measure samples in sequence in pairs. After two spiked samples are measured, evacuate the FTIR cell, and turn the manifold valve so that spiked sample flows to the FTIR cell. Allow the connecting line from the manifold to the FTIR cell to purge thoroughly (the time depends on the line length and flow rate). Collect a pair of spiked samples. Repeat the procedure until at least 24 measurements are completed.

13.3 Simultaneous Measurements With Two FTIR Systems. If unspiked effluent concentrations of the target analyte(s) vary significantly with time, it may be desirable to perform synchronized measurements of spiked and unspiked sample. Use two FTIR systems, each with its own cell and sampling system to perform simultaneous spiked and unspiked measurements. The optical configurations shall be similar, if possible. The sampling configurations shall be the same. One sampling system and FTIR analyzer shall be used to measure spiked effluent. The other sampling system and FTIR analyzer shall be used to measure unspiked flue gas. Both systems shall use the same sampling procedure (i.e., batch or continuous).

13.3.1 If batch sampling is used, synchronize the cell evacuation, cell filling, and collection of spectra. Fill both cells at the same rate (in cell volumes per unit time).

13.3.2 If continuous sampling is used, adjust the sample flow through each gas cell so that the same number of cell volumes pass through each cell in a given time (i.e. $TC_1 = TC_2$).

13.4 Statistical Treatment. The statistical procedure of EPA Method 301 of this appendix, section 6.3 is used to evaluate the bias and precision. For FTIR testing a validation "run" is defined as spectra of 24 independent samples, 12 of which are spiked with the analyte(s) and 12

of which are not spiked.

13.4.1 Bias. Determine the bias (defined by EPA Method 301 of this appendix, section 6.3.2) using equation 7:

$$B = S_m - CS \tag{7}$$

where:

B = Bias at spike level.

S_m = Mean concentration of the analyte spiked samples.

CS = Expected concentration of the spiked samples.

13.4.2 Correction Factor. Use section 6.3.2.2 of Method 301 of this appendix to evaluate the statistical significance of the bias. If it is determined that the bias is significant, then use section 6.3.3 of Method 301 to calculate a correction factor (CF). Analytical results of the test method are multiplied by the correction factor, if $0.7 \leq CF \leq 1.3$. If is determined that the bias is significant and CF > ± 30 percent, then the test method is considered to "not valid."

13.4.3 If measurements do not pass validation, evaluate the sampling system, instrument configuration, and analytical system to determine if improper set-up or a malfunction was the cause. If so, repair the system and repeat the validation.

14.0 Pollution Prevention.

The extracted sample gas is vented outside the enclosure containing the FTIR system and gas manifold after the analysis. In typical method applications the vented sample volume is a small fraction of the source volumetric flow and its composition is identical to that emitted from the source. When analyte spiking is used, spiked pollutants are vented with the extracted sample gas. Approximately 1.6 x 10^{-4} to 3.2 x 10^{-4} lbs of a single HAP may be vented to the atmosphere in a typical validation run of 3 hours. (This assumes a molar mass of 50 to 100 g, spike rate of 1.0 L/min, and a standard concentration of 100 ppm). Minimize emissions by keeping the spike flow off when not in use.

15.0 Waste Management.

Small volumes of laboratory gas standards can be vented through a laboratory hood. Neat samples must be packed and disposed according to applicable regulations. Surplus materials may be returned to supplier for disposal.

16.0 References.

1. "Field Validation Test Using Fourier Transform Infrared (FTIR) Spectrometry To Measure Formaldehyde, Phenol and Methanol at a Wool Fiberglass Production Facility." Draft. U.S. Environmental Protection Agency Report, EPA Contract No. 68D20163, Work Assignment I-32, September 1994.

2. "FTIR Method Validation at a Coal-Fired Boiler".

Prepared for U.S. Environmental Protection Agency, Research Triangle Park, NC. Publication No.: EPA-454/R95-004, NTIS No.: PB95-193199. July, 1993.

3. "Method 301 - Field Validation of Pollutant Measurement Methods from Various Waste Media," **40 CFR part 63, appendix A.**

4. "Molecular Vibrations; The Theory of Infrared and Raman Vibrational Spectra," E. Bright Wilson, J. C. Decius, and P. C. Cross, Dover Publications, Inc., 1980. For a less intensive treatment of molecular rotational-vibrational spectra see, for example, "Physical Chemistry," G. M. Barrow, chapters 12, 13, and 14, McGraw Hill, Inc., 1979.

5. "Fourier Transform Infrared Spectrometry," Peter R. Griffiths and James de Haseth, **Chemical Analysis, 83**, 16-25,(1986), P. J. Elving, J. D. Winefordner and I. M. Kolthoff (ed.), John Wiley and Sons.

6. "Computer-Assisted Quantitative Infrared Spectroscopy," Gregory L. McClure (ed.), **ASTM Special Publication 934** (ASTM), 1987.

7. "Multivariate Least-Squares Methods Applied to the Quantitative Spectral Analysis of Multicomponent Mixtures," **Applied Spectroscopy, 39**(10), 73-84, 1985.

Table 1. EXAMPLE PRESENTATION OF SAMPLING DOCUMENTATION.

Sample Time	Spectrum File Name	Background File Name	Sample conditioning	Process condition

Sample Time	Spectrum File	Interferogram	Resolution	Scans	Apodization	Gain	CTS Spectrum

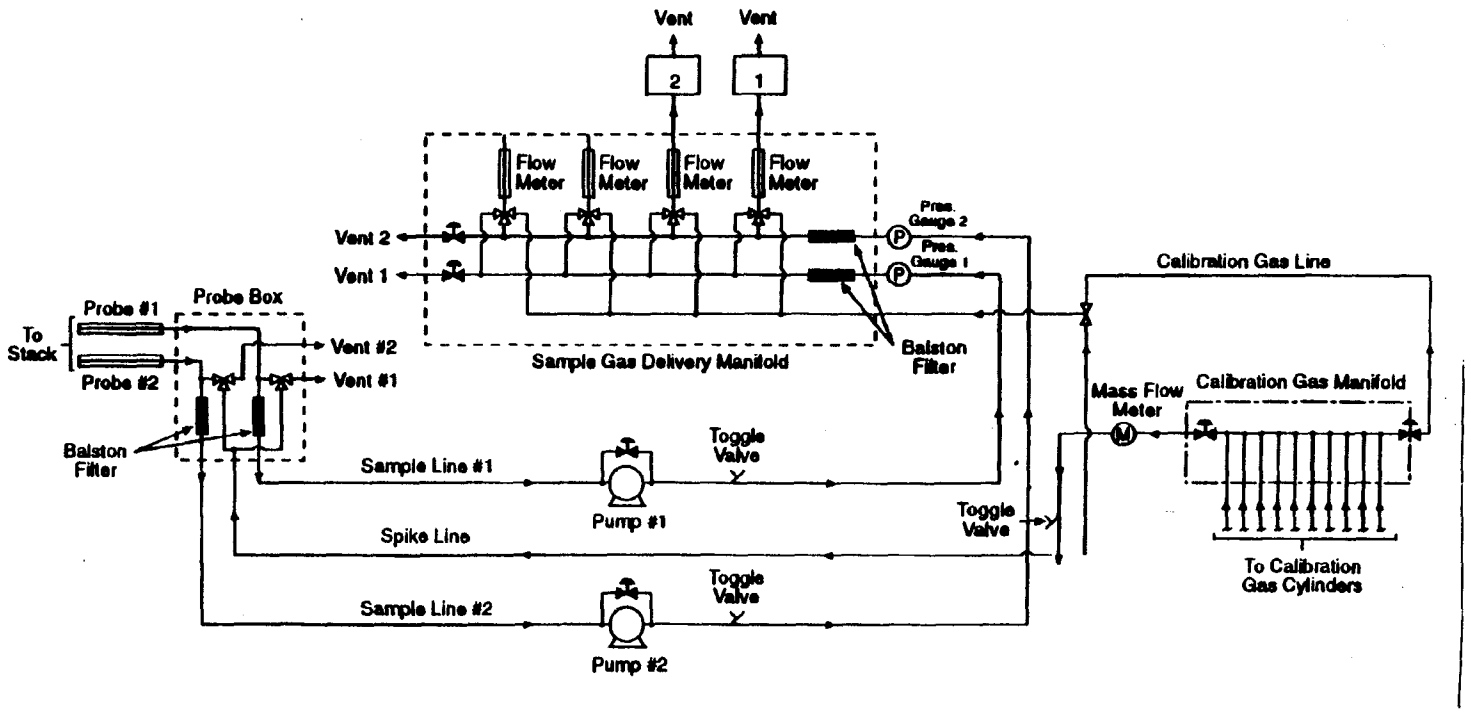

Figure 1. Extractive FTIR sampling system.

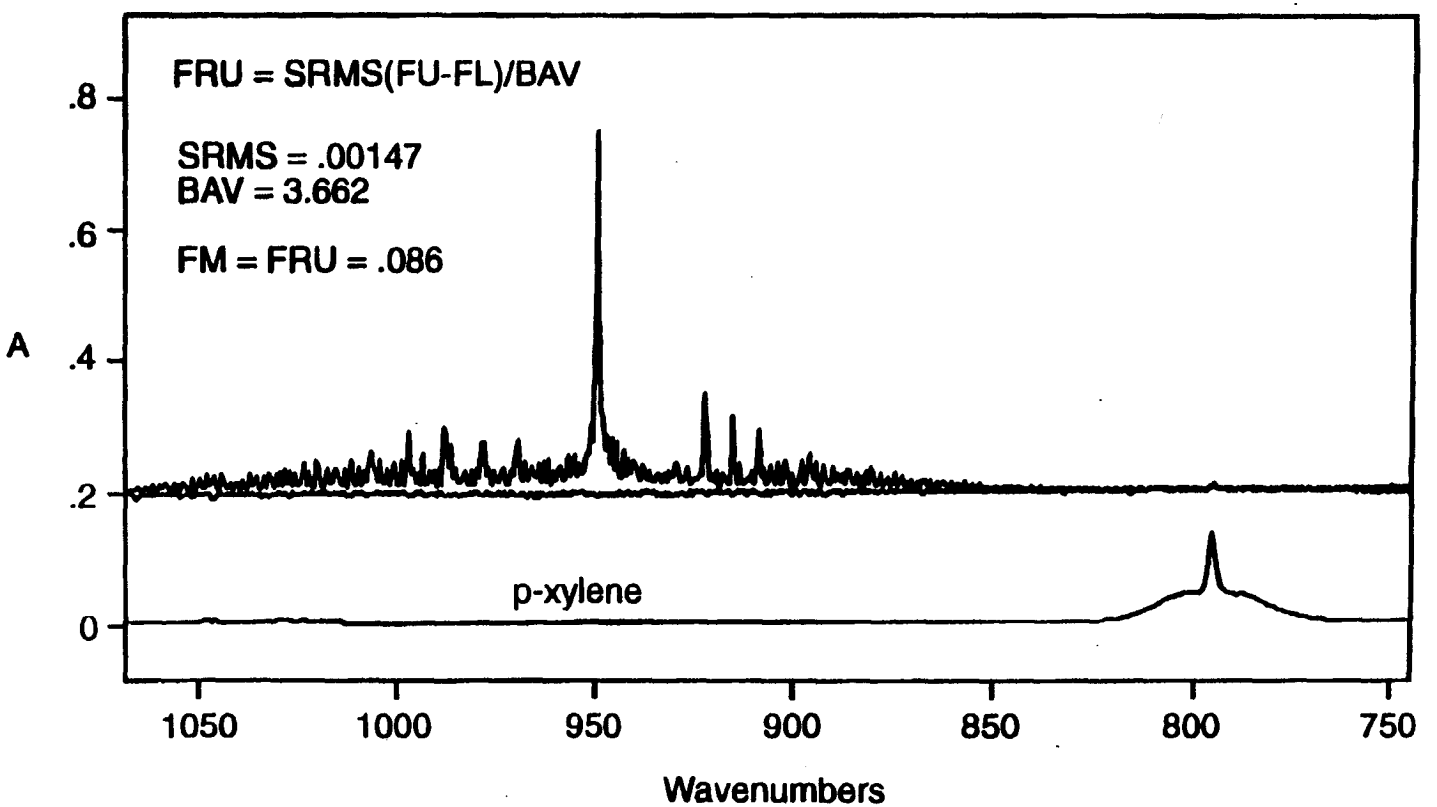

Figure 2. Fractional Reproducibility. Top: average of cts1031a and cts1101b. Bottom: Reference spectrum of p-xylene.

D-2 EPA FTIR PROTOCOL

PROTOCOL FOR THE USE OF EXTRACTIVE FOURIER TRANSFORM INFRARED (FTIR) SPECTROMETRY FOR THE ANALYSES OF GASEOUS EMISSIONS FROM STATIONARY SOURCES

INTRODUCTION

The purpose of this document is to set general guidelines for the use of modern FTIR spectroscopic methods for the analysis of gas samples extracted from the effluent of stationary emission sources. This document outlines techniques for developing and evaluating such methods and sets basic requirements for reporting and quality assurance procedures.

1.0 NOMENCLATURE

1.1 Appendix A lists definitions of the symbols and terms used in this Protocol, many of which have been taken directly from American Society for Testing and Materials (ASTM) publication E 131-90a, entitled "Terminology Relating to Molecular Spectroscopy."

1.2 Except in the case of background spectra or where otherwise noted, the term "spectrum" refers to a double-beam spectrum in units of absorbance vs. wavenumber (cm^{-1}).

1.3 The term "Study" in this document refers to a publication that has been subjected to EPA- or peer-review.

2.0 APPLICABILITY AND ANALYTICAL PRINCIPLE

2.1 Applicability. This Protocol applies to the determination of compound-specific concentrations in single- and multiple-component gas phase samples using double-beam absorption spectroscopy in the mid-infrared band. It does not specifically address other FTIR applications, such as single-beam spectroscopy, analysis of open-path (non-enclosed) samples, and continuous measurement techniques. If multiple spectrometers, absorption cells, or instrumental linewidths are used in such analyses, each distinct operational configuration of the system must be evaluated separately according to this Protocol.

2.2 Analytical Principle.

2.2.1 In the mid-infrared band, most molecules exhibit characteristic gas phase absorption spectra that may be recorded by FTIR systems. Such systems consist of a source of mid-infrared radiation, an interferometer, an enclosed sample cell of known absorption pathlength, an infrared detector, optical elements for the transfer of infrared radiation between components, and gas flow control and measurement components. Adjunct and integral computer systems are used for controlling

the instrument, processing the signal, and for performing both Fourier transforms and quantitative analyses of spectral data.

2.2.2 The absorption spectra of pure gases and of mixtures of gases are described by a linear absorbance theory referred to as Beer's Law. Using this law, modern FTIR systems use computerized analytical programs to quantify compounds by comparing the absorption spectra of known (reference) gas samples to the absorption spectrum of the sample gas. Some standard mathematical techniques used for comparisons are classical least squares, inverse least squares, cross-correlation, factor analysis, and partial least squares. Reference A describes several of these techniques, as well as additional techniques, such as differentiation methods, linear baseline corrections, and non-linear absorbance corrections.

3.0 GENERAL PRINCIPLES OF PROTOCOL REQUIREMENTS

The characteristics that distinguish FTIR systems from gas analyzers used in instrumental gas analysis methods (e.g., EPA Methods 6C and 7E) are: (1) Computers are necessary to obtain and analyze data; (2) chemical concentrations can be quantified using previously recorded infrared reference spectra; and (3) analytical assumptions and results, including possible effects of interfering compounds, can be evaluated after the quantitative analysis. The following general principles and requirements of this Protocol are based on these characteristics.

3.1 Verifiability and Reproducibility of Results. Store all data and document data analysis techniques sufficient to allow an independent agent to reproduce the analytical results from the raw interferometric data.

3.2 Transfer of Reference Spectra. To determine whether reference spectra recorded under one set of conditions (e.g., optical bench, instrumental linewidth, absorption pathlength, detector performance, pressure, and temperature) can be used to analyze sample spectra taken under a different set of conditions, quantitatively compare "calibration transfer standards" (CTS) and reference spectra as described in this Protocol. (Note: The CTS may, but need not, include analytes of interest). To effect this, record the absorption spectra of the CTS (a) immediately before and immediately after recording reference spectra and (b) immediately after recording sample spectra.

3.3 Evaluation of FTIR Analyses. The applicability, accuracy, and precision of FTIR measurements are influenced by a number of interrelated factors, which may be divided into two classes:

3.3.1 Sample-Independent Factors. Examples are system configuration and performance (e.g., detector sensitivity and infrared source output), quality and applicability of reference

absorption spectra, and type of mathematical analyses of the spectra. These factors define the fundamental limitations of FTIR measurements for a given system configuration. These limitations may be estimated from evaluations of the system before samples are available. For example, the detection limit for the absorbing compound under a given set of conditions may be estimated from the system noise level and the strength of a particular absorption band. Similarly, the accuracy of measurements may be estimated from the analysis of the reference spectra.

3.3.2 Sample-Dependent Factors. Examples are spectral interferants (e.g., water vapor and CO_2) or the overlap of spectral features of different compounds and contamination deposits on reflective surfaces or transmitting windows. To maximize the effectiveness of the mathematical techniques used in spectral analysis, identification of interferants (a standard initial step) and analysis of samples (includes effects of other analytical errors) are necessary. Thus, the Protocol requires post-analysis calculation of measurement concentration uncertainties for the detection of these potential sources of measurement error.

4.0 PRE-TEST PREPARATIONS AND EVALUATIONS

Before testing, demonstrate the suitability of FTIR spectrometry for the desired application according to the procedures of this section.

4.1 Identify Test Requirements. Identify and record the test requirements described below in 4.1.1 through 4.1.5. These values set the desired or required goals of the proposed analysis; the description of methods for determining whether these goals are actually met during the analysis comprises the majority of this Protocol.

4.1.1 Analytes (specific chemical species) of interest. Label the analytes from i = 1 to I.

4.1.2 Analytical uncertainty limit (AU_i). The AU_i is the maximum permissible fractional uncertainty of analysis for the ith analyte concentration, expressed as a fraction of the analyte concentration in the sample.

4.1.3 Required detection limit for each analyte (DL_i, ppm). The detection limit is the lowest concentration of an analyte for which its overall fractional uncertainty (OFU_i) is required to be less than its analytical uncertainty limit (AU_i).

4.1.4 Maximum expected concentration of each analyte ($CMAX_i$, ppm).

4.2 Identify Potential Interferants. Considering the chemistry of the process or results of previous Studies, identify potential interferants, i.e., the major effluent constituents and any relatively minor effluent constituents that possess either strong absorption characteristics or strong structural similarities to any analyte of interest. Label them 1 through N_j, where the subscript "j" pertains to potential interferants. Estimate the concentrations of these compounds in the effluent ($CPOT_j$, ppm).

4.3 Select and Evaluate the Sampling System. Considering the source, e.g., temperature and pressure profiles, moisture content, analyte characteristics, and particulate concentration), select the equipment for extracting gas samples. Recommended are a particulate filter, heating system to maintain sample temperature above the dew point for all sample constituents at all points within the sampling system (including the filter), and sample conditioning system (e.g., coolers, water-permeable membranes that remove water or other compounds from the sample, and dilution devices) to remove spectral interferants or to protect the sampling and analytical components. Determine the minimum absolute sample system pressure (P_{min}, mmHg) and the infrared absorption cell volume (V_{SS}, liter). Select the techniques and/or equipment for the measurement of sample pressures and temperatures.

4.4 Select Spectroscopic System. Select a spectroscopic configuration for the application. Approximate the absorption pathlength (L_S', meter), sample pressure (P_S', kPa), absolute sample temperature T_S', and signal integration period (t_{SS}, seconds) for the analysis. Specify the nominal minimum instrumental linewidth (MIL) of the system. Verify that the fractional error at the approximate values P_S' and T_S' is less than one half the smallest value AU_i (see Section 4.1.2).

4.5 Select Calibration Transfer Standards (CTS's). Select CTS's that meet the criteria listed in Sections 4.5.1, 4.5.2, and 4.5.3.

> <u>Note</u>: It may be necessary to choose preliminary analytical regions (see Section 4.7), identify the minimum analyte linewidths, or estimate the system noise level (see Section 4.12) before selecting the CTS. More than one compound may be needed to meet the criteria; if so, obtain separate cylinders for each compound.

4.5.1 The central wavenumber position of each analytical region lies within 25 percent of the wavenumber position of at least one CTS absorption band.

4.5.2 The absorption bands in 4.5.1 exhibit peak absorbances greater than ten times the value RMS_{EST} (see Section 4.12) but less than 1.5 absorbance units.

4.5.3 At least one absorption CTS band within the operating range of the FTIR instrument has an instrument-independent linewidth no greater than the narrowest analyte absorption band; perform and document measurements or cite Studies to determine analyte and CTS compound linewidths.

4.5.4 For each analytical region, specify the upper and lower wavenumber positions (FFU_m and FFL_m, respectively) that bracket the CTS absorption band or bands for the associated analytical region. Specify the wavenumber range, FNU to FNL, containing the absorption band that meets the criterion of Section 4.5.3.

4.5.5 Associate, whenever possible, a single set of CTS gas cylinders with a set of reference spectra. Replacement CTS gas cylinders shall contain the same compounds at concentrations within 5 percent of that of the original CTS cylinders; the entire absorption spectra (not individual spectral segments) of the replacement gas shall be scaled by a factor between 0.95 and 1.05 to match the original CTS spectra.

4.6 Prepare Reference Spectra.

Note: Reference spectra are available in a permanent soft copy from the EPA spectral library on the EMTIC (Emission Measurement Technical Information Center) computer bulletin board; they may be used if applicable.

4.6.1 Select the reference absorption pathlength (L_R) of the cell.

4.6.2 Obtain or prepare a set of chemical standards for each analyte, potential and known spectral interferants, and CTS. Select the concentrations of the chemical standards to correspond to the top of the desired range.

4.6.2.1 Commercially-Prepared Chemical Standards. Chemical standards for many compounds may be obtained from independent sources, such as a specialty gas manufacturer, chemical company, or commercial laboratory. These standards (accurate to within ±2 percent) shall be prepared according to EPA Protocol 1 (see Reference D) or shall be traceable to NIST standards. Obtain from the supplier an estimate of the stability of the analyte concentration; obtain and follow all the supplier's recommendations for recertifying the analyte concentration.

4.6.2.2 Self-Prepared Chemical Standards. Chemical standards may be prepared as follows: Dilute certified commercially prepared chemical gases or pure analytes with ultra-pure carrier (UPC) grade nitrogen according to the barometric and volumetric techniques generally described in Reference A, Section A4.6.

4.6.3 Record a set of the absorption spectra of the CTS {R1}, then a set of the reference spectra at two or more concentrations in duplicate over the desired range (the top of the range must be less than 10 times that of the bottom), followed by a second set of CTS spectra {R2}. (If self-prepared standards are used, see Section 4.6.5 before disposing of any of the standards.) The maximum accepted standard concentration-pathlength product (ASCPP) for each compound shall be higher than the maximum estimated concentration-pathlength products for both analytes and known interferants in the effluent gas. For each analyte, the minimum ASCPP shall be no greater than ten times the concentration-pathlength product of that analyte at its required detection limit.

4.6.4 Permanently store the background and interferograms in digitized form. Document details of the mathematical process for generating the spectra from these interferograms. Record the sample pressure (P_R), sample temperature (T_R), reference absorption pathlength (L_R), and interferogram signal integration period (t_{SR}). Signal integration periods for the background interferograms shall be $\geq t_{SR}$. Values of P_R, L_R, and t_{SR} shall not deviate by more than ±1 percent from the time of recording {R1} to that of recording {R2}.

4.6.5 If self-prepared chemical standards are employed and spectra of only two concentrations are recorded for one or more compounds, verify the accuracy of the dilution technique by analyzing the prepared standards for those compounds with a secondary (non-FTIR) technique as follows:

4.6.5.1 Record the response of the secondary technique to each of the four standards prepared.

4.6.5.2 Perform a linear regression of the response values (dependant variable) versus the accepted standard concentration (ASC) values (independent variable), with the regression constrained to pass through the zero-response, zero ASC point.

4.6.5.3 Calculate the average fractional difference between the actual response values and the regression-predicted values (those calculated from the regression line using the four ASC values as the independent variable).

4.6.5.4 If the average fractional difference value calculated in Section 4.6.5.3 is larger for any compound than the corresponding AU_i, the dilution technique is not sufficiently accurate and the reference spectra prepared are not valid for the analysis.

4.7 Select Analytical Regions. Using the general considerations in Section 7 of Reference A and the spectral characteristics of the analytes and interferants, select the analytical regions for the application. Label them m = 1 to M. Specify the lower, center and upper wavenumber positions of each

analytical region (FL_m, FC_m, and FU_m, respectively). Specify the analytes and interferants which exhibit absorption in each region.

4.8 Determine Fractional Reproducibility Uncertainties. Using Appendix E, calculate the fractional reproducibility uncertainty for each analyte (FRU_i) from a comparison of {R1} and {R2}. If $FRU_i > AU_i$ for any analyte, the reference spectra generated in Section 4.6 are not valid for the application.

4.9 Identify Known Interferants. Using Appendix B, determine which potential interferant affects the analyte concentration determinations. If it does, relabel the potential interferant as "known" interferant, and designate these compounds from k = 1 to K. Appendix B also provides criteria for determining whether the selected analytical regions are suitable.

4.10 Prepare Computerized Analytical Programs.

4.10.1 Choose or devise mathematical techniques (e.g, classical least squares, inverse least squares, cross-correlation, and factor analysis) based on Equation 4 of Reference A that are appropriate for analyzing spectral data by comparison with reference spectra.

4.10.2 Following the general recommendations of Reference A, prepare a computer program or set of programs that analyzes all the analytes and known interferants, based on the selected analytical regions (4.7) and the prepared reference spectra (4.6). Specify the baseline correction technique (e.g., determining the slope and intercept of a linear baseline contribution in each analytical region) for each analytical region, including all relevant wavenumber positions.

4.10.3 Use programs that provide as output [at the reference absorption pathlength (L_R), reference gas temperature (T_R), and reference gas pressure (P_R)] the analyte concentrations, the known interferant concentrations, and the baseline slope and intercept values. If the sample absorption pathlength (L_S), sample gas temperature (T_S) or sample gas pressure (P_S) during the actual sample analyses differ from L_R, T_R, and P_R, use a program or set of programs that applies multiplicative corrections to the derived concentrations to account for these variations, and that provides as output both the corrected and uncorrected values. Include in the report of the analysis (see Section 7.0) the details of any transformations applied to the original reference spectra (e.g., differentiation), in such a fashion that all analytical results may be verified by an independent agent from the reference spectra and data spectra alone.

4.11 Determine the Fractional Calibration Uncertainty. Calculate the fractional calibration uncertainty for each analyte (FCU_i) according to Appendix F, and compare these values to the

fractional uncertainty limits (AU_i; see Section 4.1). If $FCU_i > AU_i$), either the reference spectra or analytical programs for that analyte are unsuitable.

4.12 Verify System Configuration Suitability. Using Appendix C, measure or obtain estimates of the noise level (RMS_{EST}, absorbance) of the FTIR system; alternatively, construct the complete spectrometer system and determine the values RMS_{Sm} using Appendix G. Estimate the minimum measurement uncertainty for each analyte (MAU_i, ppm) and known interferant (MIU_k, ppm) using Appendix D. Verify that (a) $MAU_i < (AU_i)(DL_i)$, $FRU_i < AU_i$, and $FCU_i < AU_i$ for each analyte and that (b) the CTS chosen meets the requirements listed in Section 4.5.

5.0 SAMPLING AND ANALYSIS PROCEDURE

5.1 Analysis System Assembly and Leak-Test. Assemble the analysis system. Allow sufficient time for all system components to reach the desired temperature. Then determine the leak-rate (L_R) and leak volume (V_L), where $V_L = L_R\ t_{SS}$. Leak volumes shall be ≤4 percent of V_{SS}.

5.2 Verify Instrumental Performance. Measure the noise level of the system in each analytical region using the procedure of Appendix G. If any noise level is higher than that estimated for the system in Section 4.12, repeat the calculations of Appendix D and verify that the requirements of Section 4.12 are met; if they are not, adjust or repair the instrument and repeat this section.

5.3 Determine the Sample Absorption Pathlength. Record a background spectrum. Then, fill the absorption cell with CTS at the pressure P_R and record a set of CTS spectra {R3}. Store the background and unscaled CTS single beam interferograms and spectra. Using Appendix H, calculate the sample absorption pathlength (L_S) for each analytical region. The values L_S shall not differ from the approximated sample pathlength L_S' (see Section 4.4) by more than 5 percent.

5.4 Record Sample Spectrum. Connect the sample line to the source. Either evacuate the absorption cell to an absolute pressure below 5 mmHg before extracting a sample from the effluent stream into the absorption cell, or pump at least ten cell volumes of sample through the cell before obtaining a sample. Record the sample pressure P_S. Generate the absorbance spectrum of the sample. Store the background and sample single beam interferograms, and document the process by which the absorbance spectra are generated from these data. (If necessary, apply the spectral transformations developed in Section 5.6.2). The resulting sample spectrum is referred to below as S_S.

Note: Multiple sample spectra may be recorded according to the procedures of Section 5.4 before performing Sections 5.5 and 5.6.

5.5 Quantify Analyte Concentrations. Calculate the unscaled analyte concentrations RUA_i and unscaled interferant concentrations RUI_K using the programs developed in Section 4. To correct for pathlength and pressure variations between the reference and sample spectra, calculate the scaling factor $R_{LPS} = (L_R P_R T_S)/(L_S P_S T_R)$. Calculate the final analyte and interferant concentrations $RSA_i = R_{LPS} RUA_i$ and $RSI_k = R_{LPS} RUI_k$.

5.6 Determine Fractional Analysis Uncertainty. Fill the absorption cell with CTS at the pressure P_S. Record a set of CTS spectra {R4}. Store the background and CTS single beam interferograms. Using Appendix H, calculate the fractional analysis uncertainty (FAU) for each analytical region. If the FAU indicated for any analytical region is larger than the required accuracy requirements determined in Section 4.1, then comparisons to previously recorded reference spectra are invalid in that analytical region, and the analyst shall perform one or both of the following procedures:

5.6.1 Perform instrumental checks and adjust the instrument to restore its performance to acceptable levels. If adjustments are made, repeat Sections 5.3, 5.4 (except for the recording of a sample spectrum), and 5.5 to demonstrate that acceptable uncertainties are obtained in all analytical regions.

5.6.2 Apply appropriate mathematical transformations (e.g., frequency shifting, zero-filling, apodization, smoothing) to the spectra (or to the interferograms upon which the spectra are based) generated during the performance of the procedures of Section 5.3. Document these transformations and their reproducibility. Do not apply multiplicative scaling of the spectra, or any set of transformations that is mathematically equivalent to multiplicative scaling. Different transformations may be applied to different analytical regions. Frequency shifts shall be smaller than one-half the minimum instrumental linewidth, and must be applied to all spectral data points in an analytical region. The mathematical transformations may be retained for the analysis if they are also applied to the appropriate analytical regions of all sample spectra recorded, and if all original sample spectra are digitally stored. Repeat Sections 5.3, 5.4 (except the recording of a sample spectrum), and 5.5 to demonstrate that these transformations lead to acceptable calculated concentration uncertainties in all analytical regions.

6.0 POST-ANALYSIS EVALUATIONS

Estimate the overall accuracy of the analyses performed in Section 5 as follows:

6.1 Qualitatively Confirm the Assumed Matrix. Examine each analytical region of the sample spectrum for spectral evidence of unexpected or unidentified interferants. If found, identify the interfering compounds (see Reference C for guidance) and add them to the list of known interferants. Repeat the procedures of Section 4 to include the interferants in the uncertainty calculations and analysis procedures. Verify that the MAU and FCU values do not increase beyond acceptable levels for the application requirements. Re-calculate the analyte concentrations (Section 5.5) in the affected analytical regions.

6.2 Quantitatively Evaluate Fractional Model Uncertainty (FMU). Perform the procedures of either Section 6.2.1 or 6.2.2:

6.2.1 Using Appendix I, determine the fractional model error (FMU) for each analyte.

6.2.2 Provide statistically determined uncertainties FMU for each analyte which are equivalent to two standard deviations at the 95% confidence level. Such determinations, if employed, must be based on mathematical examinations of the pertinent sample spectra (not the reference spectra alone). Include in the report of the analysis (see Section 7.0) a complete description of the determination of the concentration uncertainties.

6.3 Estimate Overall Concentration Uncertainty (OCU). Using Appendix J, determine the overall concentration uncertainty (OCU) for each analyte. If the OCU is larger than the required accuracy for any analyte, repeat Sections 4 and 6.

7.0 REPORTING REQUIREMENTS

[Documentation pertaining to virtually all the procedures of Sections 4, 5, and 6 will be required. Software copies of reference spectra and sample spectra will be retained for some minimum time following the actual testing.]

8.0 REFERENCES

A) Standard Practices for General Techniques of Infrared Quantitative Analysis (American Society for Testing and Materials, Designation E 168-88).

B) The Coblentz Society Specifications for Evaluation of Research Quality Analytical Infrared Reference Spectra (Class II); Anal. Chemistry 47, 945A (1975); **Appl. Spectroscopy 444, pp. 211-215, 1990.**

C) Standard Practices for General Techniques for Qualitative Infrared Analysis, American Society for Testing and Materials, Designation E 1252-88.

D) "Traceability Protocol for Establishing True Concentrations of Gases Used for Calibration and Audits of Continuous Emissions Monitors (Protocol Number 1)," June 1978, Quality Assurance Handbook for Air Pollution Measurement Systems, Volume III, Stationary Source Specific Methods, EPA-600/4-77-027b, August 1977.

APPENDIX A

DEFINITIONS OF TERMS AND SYMBOLS

A.1 Definitions of Terms

absorption band - a contiguous wavenumber region of a spectrum (equivalently, a contiguous set of absorbance spectrum data points) in which the absorbance passes through a maximum or a series of maxima.

absorption pathlength - in a spectrophotometer, the distance, measured in the direction of propagation of the beam of radiant energy, between the surface of the specimen on which the radiant energy is incident and the surface of the specimen from which it is emergent.

analytical region - a contiguous wavenumber region (equivalently, a contiguous set of absorbance spectrum data points) used in the quantitative analysis for one or more analyte.

Note: The quantitative result for a single analyte may be based on data from more than one analytical region.

apodization - modification of the ILS function by multiplying the interferogram by a weighing function whose magnitude varies with retardation.

background spectrum - the single beam spectrum obtained with all system components without sample present.

baseline - any line drawn on an absorption spectrum to establish a reference point that represents a function of the radiant power incident on a sample at a given wavelength.

Beers's law - the direct proportionality of the absorbance of a compound in a homogeneous sample to its concentration.

calibration transfer standard (CTS) gas - a gas standard of a compound used to achieve and/or demonstrate suitable quantitative agreement between sample spectra and the reference spectra; see Section 4.5.1.

compound - a substance possessing a distinct, unique molecular structure.

concentration (c) - the quantity of a compound contained in a unit quantity of sample. The unit "ppm" (number, or mole, basis) is recommended.

concentration-pathlength product - the mathematical product of concentration of the species and absorption pathlength. For

reference spectra, this is a known quantity; for sample spectra, it is the quantity directly determined from Beer's law. The units "centimeters-ppm" or "meters-ppm" are recommended.

derivative absorption spectrum - a plot of rate of change of absorbance or of any function of absorbance with respect to wavelength or any function of wavelength.

double beam spectrum - a transmission or absorbance spectrum derived by dividing the sample single beam spectrum by the background spectrum.

Note: The term "double-beam" is used elsewhere to denote a spectrum in which the sample and background interferograms are collected simultaneously along physically distinct absorption paths. Here, the term denotes a spectrum in which the sample and background interferograms are collected at different times along the same absorption path.

fast Fourier transform (FFT) - a method of speeding up the computation of a discrete FT by factoring the data into sparse matrices containing mostly zeros.

flyback - interferometer motion during which no data are recorded.

Fourier transform (FT) - the mathematical process for converting an amplitude-time spectrum to an amplitude-frequency spectrum, or vice versa.

Fourier transform infrared (FTIR) spectrometer - an analytical system that employs a source of mid-infrared radiation, an interferometer, an enclosed sample cell of known absorption pathlength, an infrared detector, optical elements that transfer infrared radiation between components, and a computer system. The time-domain detector response (interferogram) is processed by a Fourier transform to yield a representation of the detector response vs. infrared frequency.

Note: When FTIR spectrometers are interfaced with other instruments, a slash should be used to denote the interface; e.g., GC/FTIR; HPCL/FTIR, and the use of FTIR should be explicit; i.e., FTIR not IR.

frequency, ν - the number of cycles per unit time.

infrared - the portion of the electromagnetic spectrum containing wavelengths from approximately 0.78 to 800 microns.

interferogram, $I(\sigma)$ - record of the modulated component of the interference signal measured as a function of retardation by the detector.

interferometer - device that divides a beam of radiant energy into two or more paths, generate an optical path difference between the beams, and recombines them in order to produce repetitive interference maxima and minima as the optical retardation is varied.

linewidth - the full width at half maximum of an absorption band in units of wavenumbers (cm^{-1}).

mid-infrared - the region of the electromagnetic spectrum from approximately 400 to 5000 cm^{-1}.

pathlength - see "absorption pathlength."

reference spectra - absorption spectra of gases with known chemical compositions, recorded at a known absorption pathlength, which are used in the quantitative analysis of gas samples.

retardation, σ - optical path difference between two beams in an interferometer; also known as "optical path difference" or "optical retardation."

scan - digital representation of the detector output obtained during one complete motion of the interferometer's moving assembly or assemblies.

scaling - application of a multiplicative factor to the absorbance values in a spectrum.

single beam spectrum - Fourier-transformed interferogram, representing the detector response vs. wavenumber.

Note: The term "single-beam" is used elsewhere to denote any spectrum in which the sample and background interferograms are recorded on the same physical absorption path; such usage differentiates such spectra from those generated using interferograms recorded along two physically distinct absorption paths (see "double-beam spectrum" above). Here, the term applies (for example) to the two spectra used directly in the calculation of transmission and absorbance spectra of a sample.

standard reference material - a reference material, the composition or properties of which are certified by a recognized standardizing agency or group.

Note: The equivalent ISO term is "certified reference material."

transmittance, T - the ratio of radiant power transmitted by the sample to the radiant power incident on the sample. Estimated in FTIR spectroscopy by forming the ratio of the single-beam sample and background spectra.

wavenumber, $\bar{v}$ - the number of waves per unit length.

Note: The usual unit of wavenumber is the reciprocal centimeter, cm^{-1}. The wavenumber is the reciprocal of the wavelength, λ, when λ is expressed in centimeters.

zero-filling - the addition of zero-valued points to the end of a measured interferogram.

Note: Performing the FT of a zero-filled interferogram results in correctly interpolated points in the computed spectrum.

A.2 Definitions of Mathematical Symbols

A, absorbance - the logarithm to the base 10 of the reciprocal of the transmittance (T).

$$A = \log_{10}\left(\frac{1}{T}\right) = -\log_{10}T \qquad (1)$$

AAI_{im} - band area of the ith analyte in the mth analytical region, at the concentration (CL_i) corresponding to the product of its required detection limit (DL_i) and analytical uncertainty limit (AU_i) .

AAV_{im} - average absorbance of the ith analyte in the mth analytical region, at the concentration (CL_i) corresponding to the product of its required detection limit (DL_i) and analytical uncertainty limit (AU_i) .

ASC, accepted standard concentration - the concentration value assigned to a chemical standard.

ASCPP, accepted standard concentration-pathlength product - for a chemical standard, the product of the ASC and the sample absorption pathlength. The units "centimeters-ppm" or "meters-ppm" are recommended.

AU_i, analytical uncertainty limit - the maximum permissible fractional uncertainty of analysis for the ith analyte concentration, expressed as a fraction of the analyte concentration determined in the analysis.

AVT_m - average estimated total absorbance in the mth analytical region.

$CKWN_k$ - estimated concentration of the kth known interferant.

$CMAX_i$ - estimated maximum concentration of the ith analyte.

$CPOT_j$ - estimated concentration of the jth potential interferant.

DL_i, required detection limit - for the ith analyte, the lowest concentration of the analyte for which its overall fractional uncertainty (OFU_i) is required to be less than the analytical uncertainty limit (AU_i).

FC_m - center wavenumber position of the mth analytical region.

FAU_i, fractional analytical uncertainty - calculated uncertainty in the measured concentration of the ith analyte because of errors in the mathematical comparison of reference and sample spectra.

FCU_i, fractional calibration uncertainty - calculated uncertainty in the measured concentration of the ith analyte because of errors in Beer's law modeling of the reference spectra concentrations.

FFL_m - lower wavenumber position of the CTS absorption band associated with the mth analytical region.

FFU_m - upper wavenumber position of the CTS absorption band associated with the mth analytical region.

FL_m - lower wavenumber position of the mth analytical region.

FMU_i, fractional model uncertainty - calculated uncertainty in the measured concentration of the ith analyte because of errors in the absorption model employed.

FN_L - lower wavenumber position of the CTS spectrum containing an absorption band at least as narrow as the analyte absorption bands.

FN_U - upper wavenumber position of the CTS spectrum containing an absorption band at least as narrow as the analyte absorption bands.

FRU_i, fractional reproducibility uncertainty - calculated uncertainty in the measured concentration of the ith analyte because of errors in the reproducibility of spectra from the FTIR system.

FU_m - upper wavenumber position of the mth analytical region.

IAI_{jm} - band area of the jth potential interferant in the mth analytical region, at its expected concentration ($CPOT_j$).

IAV_{im} - average absorbance of the ith analyte in the mth analytical region, at its expected concentration ($CPOT_j$).

$ISC_{i\ or\ k}$, indicated standard concentration - the concentration from the computerized analytical program for a single-compound reference spectrum for the ith analyte or k^{th} known interferant.

kPa - kilo-Pascal (see Pascal).

L_S' - estimated sample absorption pathlength.

L_R - reference absorption pathlength.

L_S - actual sample absorption pathlength.

MAU_i - mean of the MAU_{im} over the appropriate analytical regions.

MAU_{im}, minimum analyte uncertainty - the calculated minimum concentration for which the analytical uncertainty limit (AU_i) in the measurement of the ith analyte, based on spectral data in the mth analytical region, can be maintained.

MIU_j - mean of the MIU_{jm} over the appropriate analytical regions.

MIU_{jm}, minimum interferant uncertainty - the calculated minimum concentration for which the analytical uncertainty limit $CPOT_j/20$ in the measurement of the jth interferant, based on spectral data in the mth analytical region, can be maintained.

MIL, minimum instrumental linewidth - the minimum linewidth from the FTIR system, in wavenumbers.

Note: The MIL of a system may be determined by observing an absorption band known (through higher resolution examinations) to be narrower than indicated by the system. The MIL is fundamentally limited by the retardation of the interferometer, but is also affected by other operational parameters (e.g., the choice of apodization).

N_i - number of analytes.

N_j - number of potential interferants.

N_k - number of known interferants.

N_{scan} - the number of scans averaged to obtain an interferogram.

OFU_i - the overall fractional uncertainty in an analyte concentration determined in the analysis ($OFU_i = MAX\{FRU_i, FCU_i, FAU_i, FMU_i\}$).

Pascal (Pa) - metric unit of static pressure, equal to one Newton per square meter; one atmosphere is equal to 101,325 Pa;

1/760 atmosphere (one Torr, or one millimeter Hg) is equal to 133.322 Pa.

P_{min} - minimum pressure of the sampling system during the sampling procedure.

P_S' - estimated sample pressure.

P_R - reference pressure.

P_S - actual sample pressure.

RMS_{Sm} - measured noise level of the FTIR system in the mth analytical region.

RMSD, root mean square difference - a measure of accuracy determined by the following equation:

$$RMSD = \sqrt{\left(\frac{1}{n}\right) \sum_{i=1}^{n} e_i^2} \qquad (2)$$

where:

n = the number of observations for which the accuracy is determined.

e_i = the difference between a measured value of a property and its mean value over the n observations.

<u>Note</u>: The RMSD value "between a set of n contiguous absorbance values (A_i) and the mean of the values" (A_M) is defined as

$$RMSD = \sqrt{\left(\frac{1}{n}\right) \sum_{i=1}^{n} (A_i - A_M)^2} \qquad (3)$$

RSA_i - the (calculated) final concentration of the ith analyte.

RSI_k - the (calculated) final concentration of the kth known interferant.

t_{scan}, scan time - time used to acquire a single scan, not including flyback.

t_S, signal integration period - the period of time over which an interferogram is averaged by addition and scaling of individual scans. In terms of the number of scans N_{scan} and scan time t_{scan}, $t_S = N_{scan} t_{scan}$.

t_{SR} - signal integration period used in recording reference spectra.

t_{SS} - signal integration period used in recording sample spectra.

T_R - absolute temperature of gases used in recording reference spectra.

T_S - absolute temperature of sample gas as sample spectra are recorded.

TP, Throughput - manufacturer's estimate of the fraction of the total infrared power transmitted by the absorption cell and transfer optics from the interferometer to the detector.

V_{SS} - volume of the infrared absorption cell, including parts of attached tubing.

W_{ik} - weight used to average over analytical regions k for quantities related to the analyte i; see Appendix D.

Note that some terms are missing, e.g., BAV_m, OCU, $RMSS_m$, SUB_S, SIC_i, SAC_i, S_S

APPENDIX B

IDENTIFYING SPECTRAL INTERFERANTS

B.1 General

B.1.1 Assume a fixed absorption pathlength equal to the value L_S'.

B.1.2 Use band area calculations to compare the relative absorption strengths of the analytes and potential interferants. In the mth analytical region (FL_m to FU_m), use either rectangular or trapezoidal approximations to determine the band areas described below (see Reference A, Sections A.3.1 through A.3.3); document any baseline corrections applied to the spectra.

B.1.3 Use the average total absorbance of the analytes and potential interferants in each analytical region to determine whether the analytical region is suitable for analyte concentration determinations.

> Note: The average absorbance in an analytical region is the band area divided by the width of the analytical region in wavenumbers. The average total absorbance in an analytical region is the sum of the average absorbances of all analytes and potential interferants.

B.2 Calculations

B.2.1 Prepare spectral representations of each analyte at the concentration $CL_i = (DL_i)(AU_i)$, where DL_i is the required detection limit and AU_i is the maximum permissible analytical uncertainty. For the mth analytical region, calculate the band area (AAI_{im}) and average absorbance (AAV_{im}) from these scaled analyte spectra.

B.2.2 Prepare spectral representations of each potential interferant at its expected concentration ($CPOT_j$). For the mth analytical region, calculate the band area (IAI_{jm}) and average absorbance (IAV_{jm}) from these scaled potential interferant spectra.

B.2.3 Repeat the calculation for each analytical region, and record the band area results in matrix form as indicated in Figure B.1.

B.2.4 If the band area of any potential interferant in an analytical region is greater than the one-half the band area of any analyte (i.e., $IAI_{jm} > 0.5\ AAI_{im}$ for any pair ij and any m), classify the potential interferant as known interferant. Label the known interferants k = 1 to K. Record the results in matrix form as indicated in Figure B.2.

B.2.5 Calculate the average total absorbance (AVT_m) for each analytical region and record the values in the last row of the matrix described in Figure B.2. Any analytical region where AVT_m >2.0 is unsuitable.

FIGURE B.1 Presentation of Potential Interferant Calculations

	Analytical Regions 1 . . . . . M
Analyte Labels	
1	AAI_{11} . . . AAI_{1M}
.	. .
.	. .
I	AAI_{I1} . . . AAI_{IM}
Potential Interferant Labels	
1	IAI_{11} . . . IAI_{1M}
.	. .
.	. .
J	IAI_{J1} . . . IAI_{JM}

FIGURE B.2 Presentation of Known Interferant Calculations

	Analytical Regions 1 . . . . . M
Analyte Labels	
1	AAI_{11} . . . . AAI_{1M}
.	. .
.	. .
I	AAI_{I1} . . . . AAI_{IM}
Known Interferant Labels	
1	IAI_{11} . . . . IAI_{1M}
.	. .
.	. .
K	IAI_{K1} . . . . IAI_{KM}
Total Average Absorbance	AVT_1 AVT_M

APPENDIX C

ESTIMATING NOISE LEVELS

C.1 General

C.1.1 The root-mean-square (RMS) noise level is the standard measure of noise in this Protocol. The RMS noise level of a contiguous segment of a spectrum is defined as the RMS difference (RMSD) between the absorbance values which form the segment and the mean value of that segment (see Appendix A).

C.1.2 The RMS noise value in double-beam absorbance spectra is assumed to be inversely proportional to: (a) the square root of the signal integration period of the sample single beam spectra from which it is formed, and (b) to the total infrared power transmitted through the interferometer and absorption cell.

C.1.3 Practically, the assumption of C.1.2 allow the RMS noise level of a complete system to be estimated from the following four quantities:

(a) RMS_{MAN} - the noise level of the system (in absorbance units), without the absorption cell and transfer optics, <u>under those conditions necessary to yield the specified minimum instrumental linewidth</u>, e.g., Jacquinot stop size.

(b) t_{MAN} - the manufacturer's signal integration time used to determine RMS_{MAN}.

(c) t_{SS} - the signal integration time for the analyses.

(d) TP - the manufacturer's estimate of the fraction of the total infrared power transmitted by the absorption cell and transfer optics from the interferometer to the detector.

C.2 Calculations

C.2.1 Obtain the values of RMS_{MAN}, t_{MAN}, and TP from the manufacturers of the equipment, or determine the noise level by direct measurements with the completely constructed system proposed in Section 4.

C.2.2 Calculate the noise value of the system (RMS_{EST}) as follows:

$$RMS_{EST} = RMS_{MAN} \; TP \sqrt{\frac{t_{ss}}{t_{MAN}}} \qquad (4)$$

APPENDIX D

ESTIMATING MINIMUM CONCENTRATION MEASUREMENT UNCERTAINTIES (MAU and MIU)

D.1 General

Estimate the minimum concentration measurement uncertainties for the ith analyte (MAU_i) and j^{th} interferant (MIU_j) based on the spectral data in the mth analytical region by comparing the analyte band area in the analytical region (AAI_{im}) and estimating or measuring the noise level of the system (RMS_{EST} or RMS_{Sm}).

Note: For a single analytical region, the MAU or MIU value is the concentration of the analyte or interferant for which the band area is equal to the product of the analytical region width (in wavenumbers) and the noise level of the system (in absorbance units). If data from more than one analytical region is used in the determination of an analyte concentration, the MAU or MIU is the mean of the separate MAU or MIU values calculated for each analytical region.

D.2 Calculations

D.2.1 For each analytical region, set RMS = RMS_{Sm} if measured (Appendix G), or set RMS = RMS_{EST} if estimated (Appendix C).

D.2.2 For each analyte associated with the analytical region, calculate

$$MAU_{im} = (RMS)(DL_i)(AU_i)\frac{(FU_m - FL_m)}{AAI_{im}} \qquad (5)$$

D.2.3 If only the mth analytical region is used to calculate the concentration of the ith analyte, set $MAU_i = MAU_{im}$.

D.2.4 If a number of analytical regions are used to calculate the concentration of the ith analyte, set MAU_i equal to the weighted mean of the appropriate MAU_{im} values calculated above; the weight for each term in the mean is equal to the fraction of the total wavenumber range used for the calculation represented by each analytical region. Mathematically, if the set of analytical regions employed is {m'}, then the MAU for each analytical region is

$$MAU_i = \sum_{k \in \{m'\}} W_{ik} \; MAU_{ik} \tag{6}$$

where the weight W_{ik} is defined for each term in the sum as

$$W_{ik} = (FM_k - FL_k) \left(\sum_{p \in \{m'\}} [FM_p - FL_p] \right)^{-1} \tag{7}$$

D.2.5 Repeat Sections D.2.1 through D.2.4 to calculate the analogous values MIU_j for the interferants j = 1 to J. Replace the value $(AU_i)(DL_i)$ in the above equations with $CPOT_j/20$; replace the value AAI_{im} in the above equations with IAI_{jm}.

APPENDIX E

DETERMINING FRACTIONAL REPRODUCIBILITY UNCERTAINTIES (FRU)

E.1 General

To estimate the reproducibility of the spectroscopic results of the system, compare the CTS spectra recorded before and after preparing the reference spectra. Compare the difference between the spectra to their average band area. Perform the calculation for each analytical region on the portions of the CTS spectra associated with that analytical region.

E.2 Calculations

E.2.1 The CTS spectra {R1} consist of N spectra, denoted by S_{1i}, i=1, N. Similarly, the CTS spectra {R2} consist of N spectra, denoted by S_{2i}, i=1, N. Each S_{ki} is the spectrum of a single compound, where i denotes the compound and k denotes the set {Rk} of which S_{ki} is a member. Form the spectra S_3 according to $S_{3i} = S_{2i}-S_{1i}$ for each i. Form the spectra S_4 according to $S_{4i} = [S_{2i}+S_{1i}]/2$ for each i.

E.2.2 Each analytical region m is associated with a portion of the CTS spectra S_{2i} and S_{1i}, for a particular i, with lower and upper wavenumber limits FFL_m and FFU_m, respectively.

E.2.3 For each m and the associated i, calculate the band area of S_{4i} in the wavenumber range FFU_m to FFL_m. Follow the guidelines of Section B.1.2 for this band area calculation. Denote the result by BAV_m.

E.2.4 For each m and the associated i, calculate the RMSD of S_{3i} between the absorbance values and their mean in the wavenumber range FFU_m to FFL_m. Denote the result by $SRMS_m$.

E.2.5 For each analytical region m, calculate the quantity

$$FM_m = SRMS_m(FFU_m-FFL_m)/BAV_m$$

E.2.6 If only the mth analytical region is used to calculate the concentration of the ith analyte, set $FRU_i = FM_m$.

E.2.7 If a number p_i of analytical regions are used to calculate the concentration of the ith analyte, set FRU_i equal to the weighted mean of the appropriate FM_m values calculated above. Mathematically, if the set of analytical regions employed is {m'}, then

$$FRU_i = \sum_{k \in \{m'\}} W_{ik} FM_k \qquad (8)$$

where the W_{ik} are calculated as described in Appendix D.

APPENDIX F

DETERMINING FRACTIONAL CALIBRATION UNCERTAINTIES (FCU)

F.1 General

F.1.1 The concentrations yielded by the computerized analytical program applied to each single-compound reference spectrum are defined as the indicated standard concentrations (ISC's). The ISC values for a single compound spectrum should ideally equal the accepted standard concentration (ASC) for one analyte or interferant, and should ideally be zero for all other compounds. Variations from these results are caused by errors in the ASC values, variations from the Beer's law (or modified Beer's law) model used to determine the concentrations, and noise in the spectra. When the first two effects dominate, the systematic nature of the errors is often apparent; take steps to correct them.

F.1.2 When the calibration error appears non-systematic, apply the following method to estimate the fractional calibration uncertainty (FCU) for each compound. The FCU is defined as the mean fractional error between the ASC and the ISC for all reference spectra with non-zero ASC for that compound. The FCU for each compound shall be less than the required fractional uncertainty specified in Section 4.1.

F.1.3 The computerized analytical programs shall also be required to yield acceptably low concentrations for compounds with ISC=0 when applied to the reference spectra. The limits chosen in this Protocol are that the ISC of each reference spectrum for each analyte or interferant shall not exceed that compound's minimum measurement uncertainty (MAU or MIU).

F.2 Calculations

F.2.1 Apply each analytical program to each reference spectrum. Prepare a similar table as that in Figure F.1 to present the ISC and ASC values for each analyte and interferant in each reference spectrum. Maintain the order of reference file names and compounds employed in preparing Figure F.1.

F.2.2 For all reference spectra in Figure F.1, verify that the absolute value of the ISC's are less than the compound's MAU (for analytes) or MIU (for interferants).

F.2.3 For each analyte reference spectrum, calculate the quantity (ASC-ISC)/ASC. For each analyte, calculate the mean of these values (the FCU_i for the ith analyte) over all reference spectra. Prepare a similar table as that in Figure F.2 to present the FCU_i and analytical uncertainty limit (AU_i) for each analyte.

FIGURE F.1

Presentation of Accepted Standard Concentrations (ASC's)
and Indicated Standard Concentrations (ISC's)

Compound Name	Reference Spectrum File Name	ASC (ppm)	ISC (ppm) Analytes i=1.....I			Interferants j=1.....J		

FIGURE F.2

Presentation of Fractional Calibration Uncertainties (FCU's)
and Analytical Uncertainties (AU's)

Analyte Name	FCU (%)	AU (%)

APPENDIX G

MEASURING NOISE LEVELS

G.1 General

The root-mean-square (RMS) noise level is the standard measure of noise. The RMS noise level of a contiguous segment of a spectrum is the RMSD between the absorbance values that form the segment and the mean value of the segment (see Appendix A).

G.2 Calculations

G.2.1 Evacuate the absorption cell or fill it with UPC grade nitrogen at approximately one atmosphere total pressure.

G.2.2 Record two single beam spectra of signal integration period t_{SS}.

G.2.3 Form the double beam absorption spectrum from these two single beam spectra, and calculate the noise level RMS_{Sm} in the M analytical regions.

APPENDIX H

DETERMINING SAMPLE ABSORPTION PATHLENGTH (L_S) AND FRACTIONAL ANALYTICAL UNCERTAINTY (FAU)

H.1 General

Reference spectra recorded at absorption pathlength (L_R), gas pressure (P_R), and gas absolute temperature (T_R) may be used to determine analyte concentrations in samples whose spectra are recorded at conditions different from that of the reference spectra, i.e., at absorption pathlength (L_S), absolute temperature (T_S), and pressure (P_S). Appendix H describes the calculations for estimating the fractional uncertainty (FAU) of this practice. It also describes the calculations for determining the sample absorption pathlength from comparison of CTS spectra, and for preparing spectra for further instrumental and procedural checks.

H.1.1 Before sampling, determine the sample absorption pathlength using least squares analysis. Determine the ratio L_S/L_R by comparing the spectral sets {R1} and {R3}, which are recorded using the same CTS at L_S and L_R, and T_S and T_R, but both at P_R.

H.1.2 Determine the fractional analysis uncertainty (FAU) for each analyte by comparing a scaled CTS spectral set, recorded at L_S, T_S, and P_S, to the CTS reference spectra of the same gas, recorded at L_R, T_R, and P_R. Perform the quantitative comparison after recording the sample spectra, based on band areas of the spectra in the CTS absorbance band associated with each analyte.

H.2 Calculations

H.2.1 Absorption Pathlength Determination. Perform and document separate linear baseline corrections to each analytical region in the spectral sets {R1} and {R3}. Form a one-dimensional array $\mathbf{A}_R$ containing the absorbance values from all segments of {R1} that are associated with the analytical regions; the members of the array are A_{Ri}, i = 1, n. Form a similar one-dimensional array $\mathbf{A}_S$ from the absorbance values in the spectral set {R3}; the members of the array are A_{Si}, i = 1, n. Based on the model $\mathbf{A}_S = r\mathbf{A}_R + \mathbf{E}$, determine the least-squares estimate of r', the value of r which minimizes the square error $\mathbf{E}^2$. Calculate the sample absorption pathlength $L_S = r'(T_S/T_R)L_R$.

H.2.2 Fractional Analysis Uncertainty. Perform and document separate linear baseline corrections to each analytical region in the spectral sets {R1} and {R4}. Form the arrays $\mathbf{A}_S$ and $\mathbf{A}_R$ as described in Section H.2.1, using values from {R1} to form $\mathbf{A}_R$, and values from {R4} to form $\mathbf{A}_S$. Calculate the values

$$NRMS_E = \sqrt{\sum_{i=1}^{n}\left[A_{Si} - \left(\frac{T_R}{T_S}\right)\left(\frac{L_S}{L_R}\right)\left(\frac{P_S}{P_R}\right)A_{Ri}\right]^2} \tag{9}$$

and

$$IA_{AV} = \frac{1}{2}\sum_{i=1}^{n}\left[A_{Si} + \left(\frac{T_R}{T_S}\right)\left(\frac{L_S}{L_R}\right)\left(\frac{P_S}{P_R}\right)A_{Ri}\right] \tag{10}$$

The fractional analytical uncertainty is defined as

$$FAU = \frac{NRMS_E}{IA_{AV}} \tag{11}$$

APPENDIX I

DETERMINING FRACTIONAL MODEL UNCERTAINTIES (FMU)

I.1 General

To prepare analytical programs for FTIR analyses, the sample constituents must first be assumed; the calculations in this appendix, based upon a simulation of the sample spectrum, verify the appropriateness of these assumptions. The simulated spectra consist of the sum of single compound reference spectra scaled to represent their contributions to the sample absorbance spectrum; scaling factors are based on the indicated standard concentrations (ISC) and measured (sample) analyte and interferant concentrations, the sample and reference absorption pathlengths, and the sample and reference gas pressures. No band-shape correction for differences in the temperature of the sample and reference spectra gases is made; such errors are included in the FMU estimate. The actual and simulated sample spectra are quantitatively compared to determine the fractional model uncertainty; this comparison uses the reference spectra band areas and residuals in the difference spectrum formed from the actual and simulated sample spectra.

I.2 Calculations

I.2.1 For each analyte (with scaled concentration RSA_i), select a reference spectrum SA_i with indicated standard concentration ISC_i. Calculate the scaling factors

$$RA_i = \frac{T_R\, L_S\, P_S\, RSA_i}{T_S\, L_R\, P_R\, ISC_i} \qquad (12)$$

and form the spectra SAC_i by scaling each SA_i by the factor RA_i.

I.2.2 For each interferant, select a reference spectrum SI_k with indicated standard concentration ISC_k. Calculate the scaling factors

$$RI_k = \frac{T_R\, L_S\, P_S\, RSI_k}{T_S\, L_R\, P_R\, ISC_k} \qquad (13)$$

and form the spectra SIC_k by scaling each SI_k by the factor RI_k.

I.2.3 For each analytical region, determine by visual inspection which of the spectra SAC_i and SIC_k exhibit absorbance bands within the analytical region. Subtract each spectrum SAC_i

and SIC_k exhibiting absorbance from the sample spectrum S_S to form the spectrum SUB_S. To save analysis time and to avoid the introduction of unwanted noise into the subtracted spectrum, it is recommended that the calculation be made (1) only for those spectral data points within the analytical regions, and (2) for each analytical region separately using the original spectrum S_S.

I.2.4 For each analytical region m, calculate the RMSD of SUB_S between the absorbance values and their mean in the region FFU_m to FFL_m. Denote the result by $RMSS_m$.

I.2.5 For each analyte i, calculate the quantity

$$FM_m = \frac{RMSS_m (FFU_m - FFL_m) AU_i DL_i}{AAI_i RSA_i} \tag{14}$$

for each analytical region associated with the analyte.

I.2.6 If only the mth analytical region is used to calculate the concentration of the ith analyte, set $FMU_i = FM_m$.

I.2.7 If a number of analytical regions are used to calculate the concentration of the ith analyte, set FM_i equal to the weighted mean of the appropriate FM_m values calculated above. Mathematically, if the set of analytical regions employed is $\{m'\}$, then

$$FMU_i = \sum_{k \in \{m'\}} W_{ik} FM_k \tag{15}$$

where W_{ik} is calculated as described in Appendix D.

APPENDIX J

DETERMINING OVERALL CONCENTRATION UNCERTAINTIES (OCU)

The calculations in previous sections and appendices estimate the measurement uncertainties for various FTIR measurements. The lowest possible overall concentration uncertainty (OCU) for an analyte is its MAU value, which is an estimate of the absolute concentration uncertainty when spectral noise dominates the measurement error. However, if the product of the largest fractional concentration uncertainty (FRU, FCU, FAU, or FMU) and the measured concentration of an analyte exceeds the MAU for the analyte, then the OCU is this product. In mathematical terms, set $OFU_i = MAX\{FRU_i, FCU_i, FAU_i, FMU_i\}$ and $OCU_i = MAX\{RSA_i*OFU_i, MAU_i\}$.

APPENDIX K

SPECTRAL DE-RESOLUTION PROCEDURES

K.1 General.

High resolution reference spectra can be converted into lower resolution standard spectra for use in quantitative analysis of sample spectra. This is accomplished by truncating the number of data points in the original reference sample and background interferograms.

De-resolved spectra must meet the following requirements to be used in quantitative analysis.

(a) The resolution must match the instrument sampling resolution. This is verified by comparing a de-resolved CTS spectrum to a CTS spectrum measured on the sampling instrument.

(b) The Fourier transformation of truncated interferograms (and their conversion to absorbance spectra) is performed using the same apodization function (and other mathematical corrections) used in converting the sample interferograms into absorbance spectra.

K.2 Procedures

This section details three alternative procedures using two different commercially available software packages. A similar procedures using another software packages is acceptable if it is based on truncation of the original reference interferograms and the results are verified by Section K.3.

K.2.1 KVB/Analect Software Procedure - The following example converts a 0.25 cm^{-1} 100 ppm ethylene spectrum (cts0305a) to 1 cm^{-1} resolution. The 0.25 cm^{-1} CTS spectrum was collected during the EPA reference spectrum program on March 5, 1992. The original data (in this example) are in KVB/Analect FX-70 format.

(i) **decomp cts0305a.aif,0305dres,1,16384,1**

"decomp" converts cts0305a to an ASCII file with name 0305dres. The resulting ASCII interferogram file is truncated to 16384 data points. Convert background interferogram (bkg0305a.aif) to ASCII in the same way.

(ii) **compose 0305dres,0305dres.aif,1**

"Compose" transforms truncated interferograms back to spectral format.

(iii) **IG2SP 0305dres.aif,0305dres.dsf,3,1,low cm^{-1},high cm^{-1}**

"IG2SP" converts interferogram to a single beam spectrum using Norton-Beer medium apodization, 3, and no zero filling, 1. De-resolved interferograms should be transformed using the same apodization and zero filling that will be used to collect sample spectra. Choose the desired low and high frequencies, in cm^{-1}. Transform the background interferogram in the same way.

(iv) **DVDR 0305dres.dsf,bkg0305a.dsf,0305dres.dlf**

"DVDR" ratios the transformed sample spectrum against the background.

(v) **ABSB 0305dres.dlf,0305dres.dlf**

"ABSB" converts the spectrum to absorbance.

The resolution of the resulting spectrum should be verified by comparison to a CTS spectrum collected at the nominal resolution. Refer to Section K.3.

K.2.2 Alternate KVB/Analect Procedure -- In either DOS (FX-70) or Windows version (FX-80) use the "Extract" command directly on the interferogram.

(i) **EXTRACT CTS0305a.aif,0305dres.aif,1,16384**

"Extract" truncates the interferogram to data points from to 16384 (or number of data points for desired nominal resolution). Truncate background interferogram in the same way.

(ii) Complete steps (iii) to (v) in Section K.2.1.

K.2.3 Grams™ Software Procedure - Grams™ is a software package that displays and manipulates spectra from a variety of instrument manufacturers. This procedure assumes familiarity with basic functions of Grams™.

This procedure is specifically for using Grams to truncate and transform reference interferograms that have been imported into Grams from the KVB/Analect format. Table K-1 shows data files and parameter values that are used in the following procedure.

The choice of all parameters in the ICOMPUTE.AB call of step 3 below should be fixed to the shown values, with the exception of the "Apodization" parameter. This parameter should be set (for both background and sample single beam conversions) to the type of apodization function chosen for the de-resolved spectral library.

TABLE K-1. GRAMS DATA FILES AND DE-RESOLUTION PARAMETERS.

Desired Nominal Spectral Resolution (cm^{-1})	Data File Name	Parameter "N" Value
0.25	Z00250.sav	65537
0.50	Z00500.sav	32769
1.0	Z01000.sav	16385
2.0	Z02000.sav	8193

(i) **Import** using "File/Import" the desired *.aif file. Clear all open data slots.

(ii) **Open** the resulting *.spc interferogram as file #1.

(iii) **Xflip** - *If the x-axis is increasing from left to right, and the ZPD burst appears near the left end of the trace, omit this step.*

In the "Arithmetic/Calc" menu item input box, type the text below. Perform the calculation by clicking on "OK" (once only), and, when the calculation is complete, click the "Continue" button to proceed to step (iv). Note the comment in step (iii) regarding the trace orientation.

xflip:#s=#s(#0,#N)+50

(iv) **Run ICOMPUTE.AB** from "Arithmetic/Do Program" menu. Ignore the "subscripting error," if it occurs.

The following menu choices should be made before execution of the program (refer to Table K-1 for the correct choice of "**N**":)

First: **N** Last: **0** Type: **Single Beam**
Zero Fill: **None** Apodization: **(as desired)**
Phasing: **User**
Points: **1024** Interpolation: **Linear** Phase:
Calculate

(v) **As** in step (iii), in the "**Arithmetic/Calc**" menu item enter and then run the following commands (refer to Table 1 for appropriate "**FILE,**" which may be in a directory other than "c:\mdgrams.")

setffp 7898.8805, 0 : loadspc "c:\mdgrams\ FILE" : #2=#s+#2

(vi) Use "**Page Up**" to activate file #2, and then use the "**File/Save As**" menu item with an appropriate file name to save the result.

K.3 Verification of New Resolution

K.3.1 Obtain interferograms of reference sample and background spectra. Truncate interferograms and convert to absorbance spectra of desired nominal resolution.

K.3.2 Document the apodization function, the level of zero filling, the number of data points, and the nominal resolution of the resulting de-resolved absorbance spectra. Use the identical apodization and level of zero filling when collecting sample spectra.

K.3.3 Perform the same de-resolution procedure on CTS interferograms that correspond with the reference spectra (reference CTS) to obtain de-resolved CTS standard spectra (CTS standards). Collect CTS spectra using the sampling resolution and the FTIR system to be used for the field measurements (test CTS). If practical, use the same pathlength, temperature, and standard concentration that were used for the reference CTS. Verify, by the following procedure that CTS linewidths and intensities are the same for the CTS standards and the test CTS.

K.3.4 After applying necessary temperature and pathlength corrections (document these corrections), subtract the CTS standard from the test CTS spectrum. Measure the RMSD in the resulting subtracted spectrum in the analytical region(s) of the CTS band(s). Use the following equation to compare this RMSD to the test CTS band area. The ratio in equation 7 must be no greater than 5 percent (0.05).

$$\frac{RMSS_i \times n(FFU_i - FFL_i)}{A_{CTS\text{-}test}} \leq .05 \qquad (16)$$

RMSS=RMSD in the ith analytical region in subtracted result, test CTS minus CTS standard.

n=number of data points per cm^{-1}. Exclude zero filled points.

FFU_i &=The upper and lower limits (cm^{-1}), respectively, of the FFL_i analytical region.

$A_{test\text{-}CTS}$=band area in the ith analytical region of the test CTS.

TECHNICAL REPORT DATA
(Please read Instructions on the reverse before completing)

1. REPORT NO. EPA-454/R-99-031	2.	3. RECIPIENT'S ACCESSION NO.
4. TITLE AND SUBTITLE FTIR Emissions Test at an Iron Foundry - GM Powertrain Group, General Motors Corp. Saginaw Metal Casting Operations Saginaw Michigan		5. REPORT DATE SEPTEMBER 1999
		6. PERFORMING ORGANIZATION CODE
7. AUTHOR(S) EMAD		8. PERFORMING ORGANIZATION REPORT NO.
9. PERFORMING ORGANIZATION NAME AND ADDRESS		10. PROGRAM ELEMENT NO.
		11. CONTRACT/GRANT NO. Midwest Research Institute (MRI) EPA Cont. 68D98027
12. SPONSORING AGENCY NAME AND ADDRESS US Environmental Protection Agency Research Triangle Park, N.C. 27711		13. TYPE OF REPORT AND PERIOD COVERED Final Emission Test Report
		14. SPONSORING AGENCY CODE EPA/200/04

15. SUPPLEMENTARY NOTES

16. ABSTRACT The US EPA is investigating iron and steel foundries to identify and quantify HAPS emitted from cupolas; electric arc furnaces; & pouring, cooling and shakedown operations of sand mold casting processes. GM Corporation, Saginaw Casting Operations (GMC) Saginaw, MI was selected by EPA as the host facility at which to 1)characterize HAP emissions from cupolas that are controlled by wet scrubbers, and 2) assess wet scrubber performance in controlling HAP emissions from cupolas. GMC was selected because EPA deemed this facility to be representative of a large segment of the sand casting foundry industry and GMC operates a relatively large cupola that is controlled by a wet scrubber.

Fourier Transform Infrared emission test runs were conducted at the cupola inlet and outlet locations. Additionaly, MRI collected tedlar bag samples from pouring, cooling, shake-out ducts and analyzed by FTIR.

17. MACT Rule support

KEY WORDS AND DOCUMENT ANALYSIS

a. DESCRIPTORS	b. IDENTIFIERS/OPEN ENDED TERMS	c. COSATI Field/Group
	MACT Support for the Iron & Steel Foundry Industry	

18. DISTRIBUTION STATEMENT RELEASE UNLIMITED	19. SECURITY CLASS (This Report)	21. NO. OF PAGES 382
	20. SECURITY CLASS (This page)	22. PRICE

EPA Form 2220-1 (Rev. 4-77) PREVIOUS EDITION IS OBSOLETE