United States
Environmental Protection
Agency

GRI-94 / 0257.25
EPA - 600/R-96-080h
June 1996

PB97-142996

Research and Development

METHANE EMISSIONS FROM THE
NATURAL GAS INDUSTRY
Volume 8: Equipment Leaks

Prepared for

Energy Information Administration (U. S. DOE)

Prepared by

National Risk Management
Research Laboratory
Research Triangle Park, NC 27711

TECHNICAL REPORT DATA
(Please read Instructions on the reverse before compl

PB97-142996

1. REPORT NO. EPA-600/R-96-080h	2.
4. TITLE AND SUBTITLE Methane Emissions from the Natural Gas Industry, Volumes 1-15 (Volume 8: Equipment Leaks)	5. REPORT DATE June 1996
	6. PERFORMING ORGANIZATION CODE
7. AUTHOR(S) L. Campbell, M. Campbell, M. Cowgill, D. Epperson, M. Hall, M. Harrison, K. Hummel, D. Myers, T. Shires, B. Stapper, C. Stapper, J. Wessels, and *	8. PERFORMING ORGANIZATION REPORT NO. DCN 96-263-081-17
9. PERFORMING ORGANIZATION NAME AND ADDRESS Radian International LLC P.O. Box 201088 Austin, Texas 78720-1088	10. PROGRAM ELEMENT NO.
	11. CONTRACT/GRANT NO. 5091-251-2171 (GRI) 68-D1-0031 (EPA)
12. SPONSORING AGENCY NAME AND ADDRESS **EPA, Office of Research and Development** **Air Pollution Prevention and Control Division** **Research Triangle Park, NC 27711**	13. TYPE OF REPORT AND PERIOD COVERED Final; 3/91-4/96
	14. SPONSORING AGENCY CODE **EPA/600/13**

15. SUPPLEMENTARY NOTES EPA project officer is D. A. Kirchgessner, MD-63, 919/541-4021. Cosponsor GRI project officer is R. A. Lott, Gas Research Institute, 8600 West Bryn Mawr Ave., Chicago, IL 60631. (*)H. Williamson (Block 7).

16. ABSTRACT The 15-volume report summarizes the results of a comprehensive program to quantify methane (CH4) emissions from the U.S. natural gas industry for the base year. The objective was to determine CH4 emissions from the wellhead and ending downstream at the customer's meter. The accuracy goal was to determine these emissions within +/-0.5% of natural gas production for a 90% confidence interval. For the 1992 base year, total CH4 emissions for the U.S. natural gas industry was 314 +/- 105 Bscf (6.04 +/- 2.01 Tg). This is equivalent to 1.4 +/- 0.5% of gross natural gas production, and reflects neither emissions reductions (per the voluntary Ameri-Gas Association/EPA Star Program) nor incremental increases (due to increased gas usage) since 1992. Results from this program were used to compare greenhouse gas emissions from the fuel cycle for natural gas, oil, and coal using the global warming potentials (GWPs) recently published by the Intergovernmental Panel on Climate Change (IPCC). The analysis showed that natural gas contributes less to potential global warming than coal or oil, which supports the fuel switching strategy suggested by the IPCC and others. In addition, study results are being used by the natural gas industry to reduce operating costs while reducing emissions.

17. KEY WORDS AND DOCUMENT ANALYSIS

a. DESCRIPTORS	b. IDENTIFIERS/OPEN ENDED TERMS	c. COSATI Field/Group
Pollution	Pollution Prevention	13B
Emission	Stationary Sources	14G
Greenhouse Effect	Global Warming	04A
Natural Gas		21D
Gas Pipelines		15E
Methane		07C

18. DISTRIBUTION STATEMENT **Release to Public**	19. SECURITY CLASS *(This Report)* Unclassified	21. NO. OF PAGES 130
	20. SECURITY CLASS *(This page)* Unclassified	22. PRICE

EPA Form 2220-1 (9-73)

TECHNICAL REPORT DATA
(Please read Instructions on the reverse before compl

PB97-142996

1. REPORT NO. EPA-600/R-96-080h	2.
4. TITLE AND SUBTITLE Methane Emissions from the Natural Gas Industry, Volumes 1-15 (Volume 8: Equipment Leaks)	5. REPORT DATE June 1996
	6. PERFORMING ORGANIZATION CODE
7. AUTHOR(S) L. Campbell, M. Campbell, M. Cowgill, D. Epperson, M. Hall, M. Harrison, K. Hummel, D. Myers, T. Shires, B. Stapper, C. Stapper, J. Wessels, and *	8. PERFORMING ORGANIZATION REPORT NO. DCN 96-263-081-17
9. PERFORMING ORGANIZATION NAME AND ADDRESS Radian International LLC P.O. Box 201088 Austin, Texas 78720-1088	10. PROGRAM ELEMENT NO.
	11. CONTRACT/GRANT NO. 5091-251-2171 (GRI) 68-D1-0031 (EPA)
12. SPONSORING AGENCY NAME AND ADDRESS **EPA, Office of Research and Development Air Pollution Prevention and Control Division Research Triangle Park, NC 27711**	13. TYPE OF REPORT AND PERIOD COVERED Final; 3/91-4/96
	14. SPONSORING AGENCY CODE **EPA/600/13**

15. SUPPLEMENTARY NOTES EPA project officer is D. A. Kirchgessner, MD-63, 919/541-4021. Cosponsor GRI project officer is R. A. Lott, Gas Research Institute, 8600 West Bryn Mawr Ave., Chicago, IL 60631. (*)H. Williamson (Block 7).

16. ABSTRACT The 15-volume report summarizes the results of a comprehensive program to quantify methane (CH4) emissions from the U.S. natural gas industry for the base year. The objective was to determine CH4 emissions from the wellhead and ending downstream at the customer's meter. The accuracy goal was to determine these emissions within +/-0.5% of natural gas production for a 90% confidence interval. For the 1992 base year, total CH4 emissions for the U.S. natural gas industry was 314 +/- 105 Bscf (6.04 +/- 2.01 Tg). This is equivalent to 1.4 +/- 0.5% of gross natural gas production, and reflects neither emissions reductions (per the voluntary Ameri-Gas Association/EPA Star Program) nor incremental increases (due to increased gas usage) since 1992. Results from this program were used to compare greenhouse gas emissions from the fuel cycle for natural gas, oil, and coal using the global warming potentials (GWPs) recently published by the Intergovernmental Panel on Climate Change (IPCC). The analysis showed that natural gas contributes less to potential global warming than coal or oil, which supports the fuel switching strategy suggested by the IPCC and others. In addition, study results are being used by the natural gas industry to reduce operating costs while reducing emissions.

17. KEY WORDS AND DOCUMENT ANALYSIS

a. DESCRIPTORS	b. IDENTIFIERS/OPEN ENDED TERMS	c. COSATI Field/Group
Pollution	Pollution Prevention	13B
Emission	Stationary Sources	14G
Greenhouse Effect	Global Warming	04A
Natural Gas		21D
Gas Pipelines		15E
Methane		07C

18. DISTRIBUTION STATEMENT **Release to Public**	19. SECURITY CLASS *(This Report)* Unclassified	21. NO. OF PAGES 130
	20. SECURITY CLASS *(This page)* Unclassified	22. PRICE

EPA Form 2220-1 (9-73)

FOREWORD

The U.S. Environmental Protection Agency is charged by Congress with protecting the Nation's land, air, and water resources. Under a mandate of national environmental laws, the Agency strives to formulate and implement actions leading to a compatible balance between human activities and the ability of natural systems to support and nurture life. To meet this mandate, EPA's research program is providing data and technical support for solving environmental problems today and building a science knowledge base necessary to manage our ecological resources wisely, understand how pollutants affect our health, and prevent or reduce environmental risks in the future.

The National Risk Management Research Laboratory is the Agency's center for investigation of technological and management approaches for reducing risks from threats to human health and the environment. The focus of the Laboratory's research program is on methods for the prevention and control of pollution to air, land, water, and subsurface resources; protection of water quality in public water systems; remediation of contaminated sites and groundwater; and prevention and control of indoor air pollution. The goal of this research effort is to catalyze development and implementation of innovative, cost-effective environmental technologies; develop scientific and engineering information needed by EPA to support regulatory and policy decisions; and provide technical support and information transfer to ensure effective implementation of environmental regulations and strategies.

This publication has been produced as part of the Laboratory's strategic long-term research plan. It is published and made available by EPA's Office of Research and Development to assist the user community and to link researchers with their clients.

E. Timothy Oppelt, Director
National Risk Management Research Laboratory

EPA REVIEW NOTICE

This report has been peer and administratively reviewed by the U.S. Environmental Protection Agency, and approved for publication. Mention of trade names or commercial products does not constitute endorsement or recommendation for use.

This document is available to the public through the National Technical Information Service, Springfield, Virginia 22161.

PROTECTED UNDER INTERNATIONAL COPYRIGHT
ALL RIGHTS RESERVED.
NATIONAL TECHNICAL INFORMATION SERVICE
U.S. DEPARTMENT OF COMMERCE

FOREWORD

The U.S. Environmental Protection Agency is charged by Congress with protecting the Nation's land, air, and water resources. Under a mandate of national environmental laws, the Agency strives to formulate and implement actions leading to a compatible balance between human activities and the ability of natural systems to support and nurture life. To meet this mandate, EPA's research program is providing data and technical support for solving environmental problems today and building a science knowledge base necessary to manage our ecological resources wisely, understand how pollutants affect our health, and prevent or reduce environmental risks in the future.

The National Risk Management Research Laboratory is the Agency's center for investigation of technological and management approaches for reducing risks from threats to human health and the environment. The focus of the Laboratory's research program is on methods for the prevention and control of pollution to air, land, water, and subsurface resources; protection of water quality in public water systems; remediation of contaminated sites and groundwater; and prevention and control of indoor air pollution. The goal of this research effort is to catalyze development and implementation of innovative, cost-effective environmental technologies; develop scientific and engineering information needed by EPA to support regulatory and policy decisions; and provide technical support and information transfer to ensure effective implementation of environmental regulations and strategies.

This publication has been produced as part of the Laboratory's strategic long-term research plan. It is published and made available by EPA's Office of Research and Development to assist the user community and to link researchers with their clients.

E. Timothy Oppelt, Director
National Risk Management Research Laboratory

EPA REVIEW NOTICE

This report has been peer and administratively reviewed by the U.S. Environmental Protection Agency, and approved for publication. Mention of trade names or commercial products does not constitute endorsement or recommendation for use.

This document is available to the public through the National Technical Information Service, Springfield, Virginia 22161.

PROTECTED UNDER INTERNATIONAL COPYRIGHT
ALL RIGHTS RESERVED.
NATIONAL TECHNICAL INFORMATION SERVICE
U.S. DEPARTMENT OF COMMERCE

EPA-600/R-96-080h
June 1996

METHANE EMISSIONS FROM THE NATURAL GAS INDUSTRY, VOLUME 8: EQUIPMENT LEAKS

FINAL REPORT

Prepared by:

Kirk E. Hummel
Lisa M. Campbell
Matthew R. Harrison

Radian International LLC
8501 N. Mopac Blvd.
P.O. Box 201088
Austin, TX 78720-1088

DCN: 95-263-081-12

For

GRI Project Manager: Robert A. Lott
GAS RESEARCH INSTITUTE
Contract No. 5091-251-2171
8600 West Bryn Mawr Ave.
Chicago, IL 60631

and

EPA Project Manager: David A. Kirchgessner
U.S. ENVIRONMENTAL PROTECTION AGENCY
Contract No. 68-D1-0031
National Risk Management Research Laboratory
Research Triangle Park, NC 27711

EPA-600/R-96-080h
June 1996

METHANE EMISSIONS FROM THE NATURAL GAS INDUSTRY, VOLUME 8: EQUIPMENT LEAKS

FINAL REPORT

Prepared by:

Kirk E. Hummel
Lisa M. Campbell
Matthew R. Harrison

Radian International LLC
8501 N. Mopac Blvd.
P.O. Box 201088
Austin, TX 78720-1088

DCN: 95-263-081-12

For

GRI Project Manager: Robert A. Lott
GAS RESEARCH INSTITUTE
Contract No. 5091-251-2171
8600 West Bryn Mawr Ave.
Chicago, IL 60631

and

EPA Project Manager: David A. Kirchgessner
U.S. ENVIRONMENTAL PROTECTION AGENCY
Contract No. 68-D1-0031
National Risk Management Research Laboratory
Research Triangle Park, NC 27711

DISCLAIMER

LEGAL NOTICE: This report was prepared by Radian International LLC as an account of work sponsored by Gas Research Institute (GRI) and the U.S. Environmental Protection Agency (EPA). Neither EPA, GRI, members of GRI, nor any person acting on behalf of either:

a. Makes any warranty or representation, express or implied, with respect to the accuracy, completeness, or usefulness of the information contained in this report, or that the use of any apparatus, method, or process disclosed in this report may not infringe privately owned rights; or

b. Assumes any liability with respect to the use of, or for damages resulting from the use of, any information, apparatus, method, or process disclosed in this report.

NOTE: EPA's Office of Research and Development quality assurance/quality control (QA/QC) requirements are applicable to some of the count data generated by this project. Emission data and additional count data are from industry or literature sources, and are not subject to EPA/ORD's QA/QC policies. In all cases, data and results were reviewed by the panel of experts listed in Appendix D of Volume 2.

DISCLAIMER

LEGAL NOTICE: This report was prepared by Radian International LLC as an account of work sponsored by Gas Research Institute (GRI) and the U.S. Environmental Protection Agency (EPA). Neither EPA, GRI, members of GRI, nor any person acting on behalf of either:

a. Makes any warranty or representation, express or implied, with respect to the accuracy, completeness, or usefulness of the information contained in this report, or that the use of any apparatus, method, or process disclosed in this report may not infringe privately owned rights; or

b. Assumes any liability with respect to the use of, or for damages resulting from the use of, any information, apparatus, method, or process disclosed in this report.

NOTE: EPA's Office of Research and Development quality assurance/quality control (QA/QC) requirements are applicable to some of the count data generated by this project. Emission data and additional count data are from industry or literature sources, and are not subject to EPA/ORD's QA/QC policies. In all cases, data and results were reviewed by the panel of experts listed in Appendix D of Volume 2.

RESEARCH SUMMARY

Title	Methane Emissions from the Natural Gas Industry, Volume 8: Equipment Leaks Final Report
Contractor	Radian International LLC GRI Contract Number 5091-251-2171 EPA Contract Number 68-D1-0031
Principal Investigators	Kirk E. Hummel Lisa M. Campbell Matthew R. Harrison
Report Period	March 1991 - June 1996 Final Report
Objective	This report describes the approach used to quantify the annual methane emission from equipment leaks using the component method. It includes equipment leaks from gas production, gas processing, transmission, storage, and customer meters.
Technical Perspective	The increased use of natural gas has been suggested as a strategy for reducing the potential for global warming. During combustion, natural gas generates less carbon dioxide (CO_2) per unit of energy produced than either coal or oil. On the basis of the amount of CO_2 emitted, the potential for global warming could be reduced by substituting natural gas for coal or oil. However, since natural gas is primarily methane, a potent greenhouse gas, losses of natural gas during production, processing, transmission, and distribution could reduce the inherent advantage of its lower CO_2 emissions. To investigate this, Gas Research Institute (GRI) and the U.S. Environmental Protection Agency's Office of Research and Development (EPA/ORD) cofunded a major study to quantify methane emissions from U.S. natural gas operations for the 1992 base year. The results of this study can be used to construct global methane budgets and to determine the relative impact on global warming of natural gas versus coal and oil.
Results	The national annual emissions from equipment leaks are: 17.4 Bscf for production; 24.4 Bscf for gas processing; 50.7 Bscf for transmission; 16.8 Bscf for gas storage; and 5.8 Bscf for customer meters.

Based on data from the entire program, methane emissions from natural gas operations are estimated to be 314 ± 105 Bscf for the 1992 base year. This is about 1.4 ± 0.5% of gross natural gas production. This study also showed that the percentage of methane emitted for an incremental increase in natural gas sales would be significantly lower than the baseline case.

The project reached it accuracy goals and provided an accurate methane emissions estimate that can be used in fuel switching analyses.

Technical Approach

In the component method for estimating emissions from equipment leaks, an average emission factor is determined for each of the basic components, such as valves, flanges, seals, and other connectors that comprise a facility. The component emission factor, determined from measured data, is combined with the average number of components comprising the facility to estimate average facility emissions. The average facility emissions are extrapolated to a national estimate by the number of facilities within the gas industry.

Two approaches were used to quantify component emission factors for each segment of the industry. The first approach, based on EPA's protocol for fugitive emissions estimation, involves screening components using a portable instrument to detect total hydrocarbon leaks. The corresponding screening value for a component is then converted to an emission rate by using a correlation equation developed from data collected using an enclosure method. The EPA protocol approach was used to quantify component emission factors for onshore production (excluding the Atlantic and Great Lakes region), offshore production, and gas processing.

The second approach used to quantify emissions from equipment components is a modification of the EPA protocol using the GRI Hi-Flow™ (trademark of Gas Research Institute) sampler or a direct flow measurement to replace the data collected using an enclosure method. The GRI Hi-Flow sampler is a newly developed device which allows the leak rate of a component to be measured directly. The GRI Hi-Flow sampler approach was used to quantify component emission factors for onshore production in the Atlantic and Great Lakes region, gas transmission and storage facilities, and customer meter sets.

Component counts for all segments were estimated based on data collected during the measurement programs, site visits, and site surveys.

RESEARCH SUMMARY

Title	Methane Emissions from the Natural Gas Industry, Volume 8: Equipment Leaks Final Report
Contractor	Radian International LLC GRI Contract Number 5091-251-2171 EPA Contract Number 68-D1-0031
Principal Investigators	Kirk E. Hummel Lisa M. Campbell Matthew R. Harrison
Report Period	March 1991 - June 1996 Final Report
Objective	This report describes the approach used to quantify the annual methane emission from equipment leaks using the component method. It includes equipment leaks from gas production, gas processing, transmission, storage, and customer meters.
Technical Perspective	The increased use of natural gas has been suggested as a strategy for reducing the potential for global warming. During combustion, natural gas generates less carbon dioxide (CO_2) per unit of energy produced than either coal or oil. On the basis of the amount of CO_2 emitted, the potential for global warming could be reduced by substituting natural gas for coal or oil. However, since natural gas is primarily methane, a potent greenhouse gas, losses of natural gas during production, processing, transmission, and distribution could reduce the inherent advantage of its lower CO_2 emissions. To investigate this, Gas Research Institute (GRI) and the U.S. Environmental Protection Agency's Office of Research and Development (EPA/ORD) cofunded a major study to quantify methane emissions from U.S. natural gas operations for the 1992 base year. The results of this study can be used to construct global methane budgets and to determine the relative impact on global warming of natural gas versus coal and oil.
Results	The national annual emissions from equipment leaks are: 17.4 Bscf for production; 24.4 Bscf for gas processing; 50.7 Bscf for transmission; 16.8 Bscf for gas storage; and 5.8 Bscf for customer meters.

Based on data from the entire program, methane emissions from natural gas operations are estimated to be 314 ± 105 Bscf for the 1992 base year. This is about 1.4 ± 0.5% of gross natural gas production. This study also showed that the percentage of methane emitted for an incremental increase in natural gas sales would be significantly lower than the baseline case.

The project reached it accuracy goals and provided an accurate methane emissions estimate that can be used in fuel switching analyses.

Technical Approach

In the component method for estimating emissions from equipment leaks, an average emission factor is determined for each of the basic components, such as valves, flanges, seals, and other connectors that comprise a facility. The component emission factor, determined from measured data, is combined with the average number of components comprising the facility to estimate average facility emissions. The average facility emissions are extrapolated to a national estimate by the number of facilities within the gas industry.

Two approaches were used to quantify component emission factors for each segment of the industry. The first approach, based on EPA's protocol for fugitive emissions estimation, involves screening components using a portable instrument to detect total hydrocarbon leaks. The corresponding screening value for a component is then converted to an emission rate by using a correlation equation developed from data collected using an enclosure method. The EPA protocol approach was used to quantify component emission factors for onshore production (excluding the Atlantic and Great Lakes region), offshore production, and gas processing.

The second approach used to quantify emissions from equipment components is a modification of the EPA protocol using the GRI Hi-Flow™ (trademark of Gas Research Institute) sampler or a direct flow measurement to replace the data collected using an enclosure method. The GRI Hi-Flow sampler is a newly developed device which allows the leak rate of a component to be measured directly. The GRI Hi-Flow sampler approach was used to quantify component emission factors for onshore production in the Atlantic and Great Lakes region, gas transmission and storage facilities, and customer meter sets.

Component counts for all segments were estimated based on data collected during the measurement programs, site visits, and site surveys.

Project Implications

For the 1992 base year, the annual methane emissions estimate for the U.S. natural gas industry is 314 Bscf ± 105 Bscf (± 33%). This is equivalent to 1.4% ± 0.5% of gross natural gas production. Results from this program were used to compare greenhouse gas emissions from the fuel cycle for natural gas, oil, and coal using the global warming potentials (GWPs) recently published by the Intergovernmental Panel on Climate Change (IPCC). The analysis showed that natural gas contributes less to potential global warming than coal or oil, which supports the fuel switching strategy suggested by IPCC and others.

In addition, results from this study are being used by the natural gas industry to reduce operating costs while reducing emissions. Some companies are also participating in the Natural Gas-Star program, a voluntary program sponsored by EPA's Office of Air and Radiation in cooperation with the American Gas Association to implement cost-effective emission reductions and to report reductions to EPA. Since this program was begun after the 1992 baseline year, any reductions in methane emissions from this program are not reflected in this study's total emissions.

Robert A. Lott
Senior Project Manager, Environment and Safety

TABLE OF CONTENTS

Page

1.0 SUMMARY 1

2.0 INTRODUCTION 3

3.0 EMISSION FACTOR METHODOLOGY 5

3.1 EPA Protocol Approach 5
3.1.1 Component Screening 6
3.1.2 Enclosure Method/Data 17
3.1.3 Correlation Equation 17
3.1.4 Pegged Source Emission Factors 19
3.1.5 Default Zero Emission Factors 22
3.2 Alternative Approach Using the GRI Hi-Flow™ Sampler 22

4.0 AVERAGE EMISSIONS FROM EQUIPMENT AND FACILITIES 26

4.1 Onshore Gas Production 28
4.1.1 Onshore Production in the Eastern U.S. Region 28
4.1.2 Onshore Production in the Western U.S. Region 34
4.2 Offshore Gas Production 37
4.3 Gas Processing 42
4.4 Transmission Compressor Stations 46
4.4.1 Station Components 49
4.4.2 Compressor-Related Components 53
4.5 Gas Storage Facilities 61
4.5.1 Station Components 63
4.5.2 Compressor-Related Components 67
4.5.3 Injection/Withdrawal Wellhead-Related Components 67
4.6 Customer Meter Sets 68

5.0 NATIONAL EMISSIONS FROM EQUIPMENT AND FACILITIES 72

5.1 Onshore Gas Production 72
5.2 Offshore Gas Production 75
5.3 Gas Processing 76
5.4 Transmission Compressor Stations 77
5.5 Gas Storage Facilities 78
5.6 Customer Meter Sets 79

6.0 REFERENCES 82

TABLE OF CONTENTS

Page

1.0 SUMMARY 1

2.0 INTRODUCTION 3

3.0 EMISSION FACTOR METHODOLOGY 5

3.1 EPA Protocol Approach 5
3.1.1 Component Screening 6
3.1.2 Enclosure Method/Data 17
3.1.3 Correlation Equation 17
3.1.4 Pegged Source Emission Factors 19
3.1.5 Default Zero Emission Factors 22
3.2 Alternative Approach Using the GRI Hi-Flow™ Sampler 22

4.0 AVERAGE EMISSIONS FROM EQUIPMENT AND FACILITIES 26

4.1 Onshore Gas Production 28
4.1.1 Onshore Production in the Eastern U.S. Region 28
4.1.2 Onshore Production in the Western U.S. Region 34
4.2 Offshore Gas Production 37
4.3 Gas Processing 42
4.4 Transmission Compressor Stations 46
4.4.1 Station Components 49
4.4.2 Compressor-Related Components 53
4.5 Gas Storage Facilities 61
4.5.1 Station Components 63
4.5.2 Compressor-Related Components 67
4.5.3 Injection/Withdrawal Wellhead-Related Components 67
4.6 Customer Meter Sets 68

5.0 NATIONAL EMISSIONS FROM EQUIPMENT AND FACILITIES 72

5.1 Onshore Gas Production 72
5.2 Offshore Gas Production 75
5.3 Gas Processing 76
5.4 Transmission Compressor Stations 77
5.5 Gas Storage Facilities 78
5.6 Customer Meter Sets 79

6.0 REFERENCES 82

REPRODUCED BY: NTIS
U. S. Department of Commerce
National Technical Information Service
Springfield, Virginia 22161

TABLE OF CONTENTS (Continued)

Page

APPENDIX A - Compressor Blowdown Operating Practices A-1

APPENDIX B - Source Sheets B-1

APPENDIX C - Conversion Table C-1

LIST OF FIGURES

		Page
1-1	Summary of Equipment Leaks Using Component Method	2
3-1	Overview of EPA Protocol	7
3-2	Conventional Gate Valve	9
3-3	Manual Globe Valve	10
3-4	Plug Valve	11
3-5	Ball Valve	12
3-6	Threaded and Flanged Connections	13
3-7	Pressure Relief Valve	14
3-8	Open-Ended Line	15
3-9	Screening Instruments	16
3-10	Sampling Train for Bagging a Source Using the Vacuum Method	18
3-11	Scatter Plot of Bagging Data and Correlation Equation	20
4-1	Illustration of Compressor Blowdown Valve Arrangement	55
4-2	Overhung and Beam-Type Centrifugal Compressors	62

LIST OF FIGURES

		Page
1-1	Summary of Equipment Leaks Using Component Method	2
3-1	Overview of EPA Protocol	7
3-2	Conventional Gate Valve	9
3-3	Manual Globe Valve	10
3-4	Plug Valve	11
3-5	Ball Valve	12
3-6	Threaded and Flanged Connections	13
3-7	Pressure Relief Valve	14
3-8	Open-Ended Line	15
3-9	Screening Instruments	16
3-10	Sampling Train for Bagging a Source Using the Vacuum Method	18
3-11	Scatter Plot of Bagging Data and Correlation Equation	20
4-1	Illustration of Compressor Blowdown Valve Arrangement	55
4-2	Overhung and Beam-Type Centrifugal Compressors	62

LIST OF TABLES

		Page
3-1	Correlation Equations Developed by EPA	21
3-2	Default Zero and Pegged Emission Factors Developed by EPA	23
4-1	Equipment Categories by Segment	27
4-2	Equipment Leak Measurement Programs	29
4-3	Component Emission Factors for Eastern U.S. Gas Production	31
4-4	Average Component Counts for Gas Production Equipment in the Eastern U.S.	32
4-5	Average Equipment Emissions for Onshore Production in the Eastern U.S.	33
4-6	Component Emission Factors for Onshore Production in the Western U.S.	35
4-7	Average Component Counts for Onshore Production in the Western U.S.	36
4-8	Average Equipment Emissions for Onshore Production in the Western U.S.	38
4-9	Average Component Emission Factors for Offshore Gas Production	40
4-10	Average Component Counts for Offshore Gas Production Equipment	41
4-11	Average Facility Emissions for Offshore Production	43
4-12	Component Emission Factors for Gas Processing	45
4-13	Average Component Counts for Gas Processing Equipment	47
4-14	Average Facility Emissions for Gas Processing Plants	48
4-15	Component Emission Factors for Transmission	50
4-16	Average Component Counts for Transmission	51
4-17	Average Facility Emissions for Transmission	52
4-18	Breakdown of Compressor Emissions by Component Type	53

LIST OF TABLES (Continued)

		Page
4-19	Average Emission Rates for Compressor Blowdown Valves in Pressurized/ Depressurized Operation	56
4-20	Operating Modes of Compressors in Gas Transmission	57
4-21	Compressor Seal Emission Rates	59
4-22	Component Emission Factors for Gas Storage	64
4-23	Average Component Counts for Gas Storage	65
4-24	Average Facility Emissions for Gas Storage	66
4-25	Operating Modes of Compressors in Gas Storage	68
4-26	Summary of Emission Rates from Outdoor Residential Customer Meter Users	69
4-27	Summary of Emission Rates from Commercial/Industrial Customer Meter Sets	71
5-1	National Activity Factors for Gas Production	73
5-2	National Annual Emissions from Onshore Production in the Eastern U.S.	74
5-3	National Annual Emissions from Onshore Production in the Western U.S.	75
5-4	National Annual Emissions from Offshore Production.	76
5-5	National Annual Emissions from Gas Processing.	77
5-6	National Annual Emissions from Transmission Compressor Stations	78
5-7	National Annual Emissions from Gas Storage Facilities	79
5-8	Statistics on Indoor Customer Meters by Region	80
5-9	National Annual Emissions from Customer Meter Sets	81
A-1	Compressor Blowdown Valve Operating Practices—Transmission	A-2
A-2	Compressor Blowdown Valve Operating Practices—Storage Stations	A-4
A-3	Compressor Blowdown Valve Operating Practices—Gas Processing Plants	A-5

1.0 SUMMARY

This report is one of several volumes that provide background information supporting the Gas Research Institute (GRI) and U.S. Environmental Protection Agency Office of Research and Development (EPA/ORD) methane emissions project. The objective of this comprehensive program is to quantify methane emissions from the gas industry starting at the wellhead and ending immediately downstream of the customer's meter. The accuracy goal of the program is to determine these emissions to within ± 5% of national gas production for the 1992 base year.

This report documents the approach used to estimate methane emissions from equipment leaks using the component method. In this method, an average emission factor is determined for each of the basic components, such as valves, flanges, seals, and other connectors that comprise a facility. The component emission factor, determined from measured data, is combined with the average number of components comprising the facility to estimate average facility emissions. The average facility emissions are extrapolated to a national estimate by the number of facilities within the gas industry.

The component method was used to estimate methane emissions from equipment leaks for onshore and offshore gas production, gas processing, transmission/storage, and customer meter sets. As shown in Figure 1-1, the total industry emissions from equipment leaks using the component method are 115 Bscf. The major contributors to emissions from equipment leaks are components associated with compressors, which have unique design and operating characteristics and are subject to vibrational wear. The single component with the largest emission rate is the compressor blowdown open-ended line which allows the compressor to be depressurized for maintenance or when idle. The compressor blowdown open-ended lines leak continuously at different rates depending upon whether the compressor is pressurized (operating or idle) or depressurized (idle).

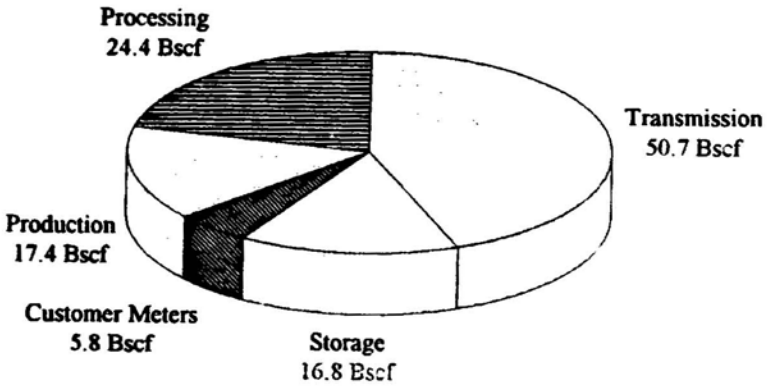

Figure 1-1. Summary of Equipment Leaks Using Component Method

Equipment leaks from onshore and offshore production contribute around 16.2 Bscf ± 43% and 1.2 Bscf ± 29%, respectively, to annual national methane emissions. The emissions from onshore production were estimated separately for the Atlantic and Great Lakes region (Eastern U.S.) and the rest of the country (Western U.S.) because of regional differences in number and type of equipment, and leak detection and repair practices. Likewise, the emissions from offshore production were estimated separately for the Gulf of Mexico and Pacific Outer Continental Shelf (OCS) regions.

Equipment leaks from gas processing are 24.4 Bscf ± 68%. For gas processing, transmission, and storage facilities, fugitive emissions from compressor-related components were estimated separately from the remaining facility because of differences in leakage characteristics. In gas processing, compressor-related components account for 90% of the total emissions from equipment leaks.

Fugitive emissions from transmission and storage stations in the United States are 50.7 Bscf ± 52% and 16.8 Bscf ± 57%, respectively. As with gas processing, the emissions from compressor-related components account for the majority of emissions, at 89% and 74% of annual fugitive emissions from transmission and storage, respectively.

Customer meter sets contribute approximately 5.8 Bscf ± 20% to annual emissions from equipment leaks. Emissions from outdoor residential customer meter sets account for 96% of the annual fugitive emissions from customer meters, whereas commercial/industrial meter sets account for only 4%.

2.0 INTRODUCTION

In the GRI/EPA program to quantify methane emissions from the U.S. natural gas industry, estimates were developed for each source of methane emissions. Fugitive emissions from equipment leaks were identified as a potentially significant source of methane losses from production, processing, and gas transmission/storage. The purpose of the study documented in this report was to define and quantify fugitive emissions from equipment leaks using the component method.*

Equipment leaks are typically low-level, unintentional losses of process fluid (gas or liquid) from the sealed surfaces of above-ground process equipment. Equipment components that tend to leak include valves, flanges and other connectors, pump seals, compressor seals, pressure relief valves, open-ended lines, and sampling connections. These components represent mechanical joints, seals, and rotating surfaces, which in time tend to wear and develop leaks.

In the component method for estimating emissions from equipment leaks, an average emission factor is determined for each of the basic components, such as valves, flanges, seals, and other connectors that comprise a facility. The average emission factor for each type of component is determined by measuring the emission rate from a large number of randomly selected components from similar types of facilities throughout the country. By knowing the average emission factor per component type (i.e., the component emission factor) and the average number of components associated with the major equipment or facility, an average estimate of the emissions per equipment/facility can be determined. Extrapolation to a national emissions estimate can then be made by determining the total count of that specific equipment/facility in the United States.

---

*Other types of fugitive emissions from the gas industry, including leaks from underground pipelines and meter and pressure regulating stations, are documented in separate reports.[1,2]

Component emission factors can vary depending upon the operating pressure, age, and leak detection and repair practices at the site. By randomly selecting a large number of sites to measure leaks, these variations from site to site are taken into account. However, it is important to develop different component emission factors for segments of the gas industry with uniquely different emission characteristics to avoid introducing bias. For example, typical component sizes, manufacturers, service, and maintenance practices are different for facilities in gas production, processing, transmission, and distribution. To eliminate bias, different component emission factors were developed for each of the industry segments. In gas production, regional differences were found between similar facilities that affected the emissions. Therefore, regional component emission factors were developed for onshore and offshore gas production.

This report documents the overall approach used to estimate emissions from equipment leaks using the component method. The method used to measure and evaluate emission rates is discussed in Section 3. The estimation of emission factors for specific equipment or facilities by combining the component emission factor with average component counts is described in Section 4. The extrapolation to a national estimate for each equipment or facility type is discussed in Section 5. This report is one of several volumes prepared under the GRI/EPA methane emissions project.

3.0 EMISSION FACTOR METHODOLOGY

Component emission factors are used with the average component counts to determine average emissions from equipment and/or facilities. Two approaches were used to quantify component emissions for valves, flanges, seals, and other components. The first approach is based on the EPA protocol document[3] and EPA Reference Method 21, Determination of Volatile Organic Compound Leaks."[4] EPA Method 21 involves screening components using a portable instrument to detect total hydrocarbon (THC) leaks. Based on the EPA protocol document, the corresponding screening value for a component is then converted to an emission rate by using a correlation equation developed from data collected using an enclosure method. (Note: The correlation equation may have been developed from screening and enclosure data collected at similar, but different, facilities.) EPA Method 21 and the approach based on the EPA protocol used to calculate emission rates from the resulting data are described in detail in Section 3.1.

The second approach used to quantify emissions from equipment components is a modification of the EPA protocol using the GRI Hi-Flow™ (trademark of Gas Research Institute) sampler or a direct flow measurement to replace the data collected using an enclosure method. The GRI Hi-Flow sampler is a newly developed device which allows the leak rate of a component to be measured directly. The sampler creates a flow field around the component in order to capture the entire leak. As the stream passes through the instrument, the flow rate and concentration are measured. The GRI Hi-Flow sampling method and the approach used to calculate emissions from the resulting data are described in Section 3.2.

3.1 EPA Protocol Approach

In general, EPA Method 21 and the EPA protocol were used to estimate emissions from equipment components in onshore production (except for production facilities in the Atlantic and Great Lakes region), offshore production, and gas processing.

Using EPA Method 21 and the EPA protocol, emission factors are derived from screening data for a single component type depending upon the service [i.e., gas, light liquid (high vapor pressure) or heavy liquid (low vapor pressure)]. (Note: There are very few heavy liquid streams in the gas industry.) The screening data are converted to an emission rate using an existing or newly generated correlation equation. The correlation equation is developed from measured data using an enclosure method collected from the same component type in similar facilities and similar service. The component emission factor is then derived as the average emission rate from all components screened. The following subsections describe the screening, enclosure, and correlation equation techniques. Figure 3-1 shows an overview of the EPA protocol as it was applied to sources in the gas industry.

3.1.1 Component Screening

The EPA Method 21 screening measurement technique uses a portable instrument to detect leakage around flanges, valves, and any other components by traversing the instrument probe over the entire surface of the component interface where leakage could occur. Components are typically subdivided according to type and service as follows:

- Valves -- gas/vapor, light liquid, heavy liquid;
- Pump Seals -- light liquid, heavy liquid;
- Compressor Seals -- gas/vapor;
- Pressure Relief Valves -- gas/vapor;
- Connections (includes flanges and threaded unions) -- all services;
- Open-Ended Lines** -- all services; and
- Sampling Connections -- all services.

The components that may be subject to fugitive leakage at natural gas facilities include valves, flanges and other connections, pump and compressor seals,

**Only includes fugitive leakage from around the valve seat when the valve is closed.

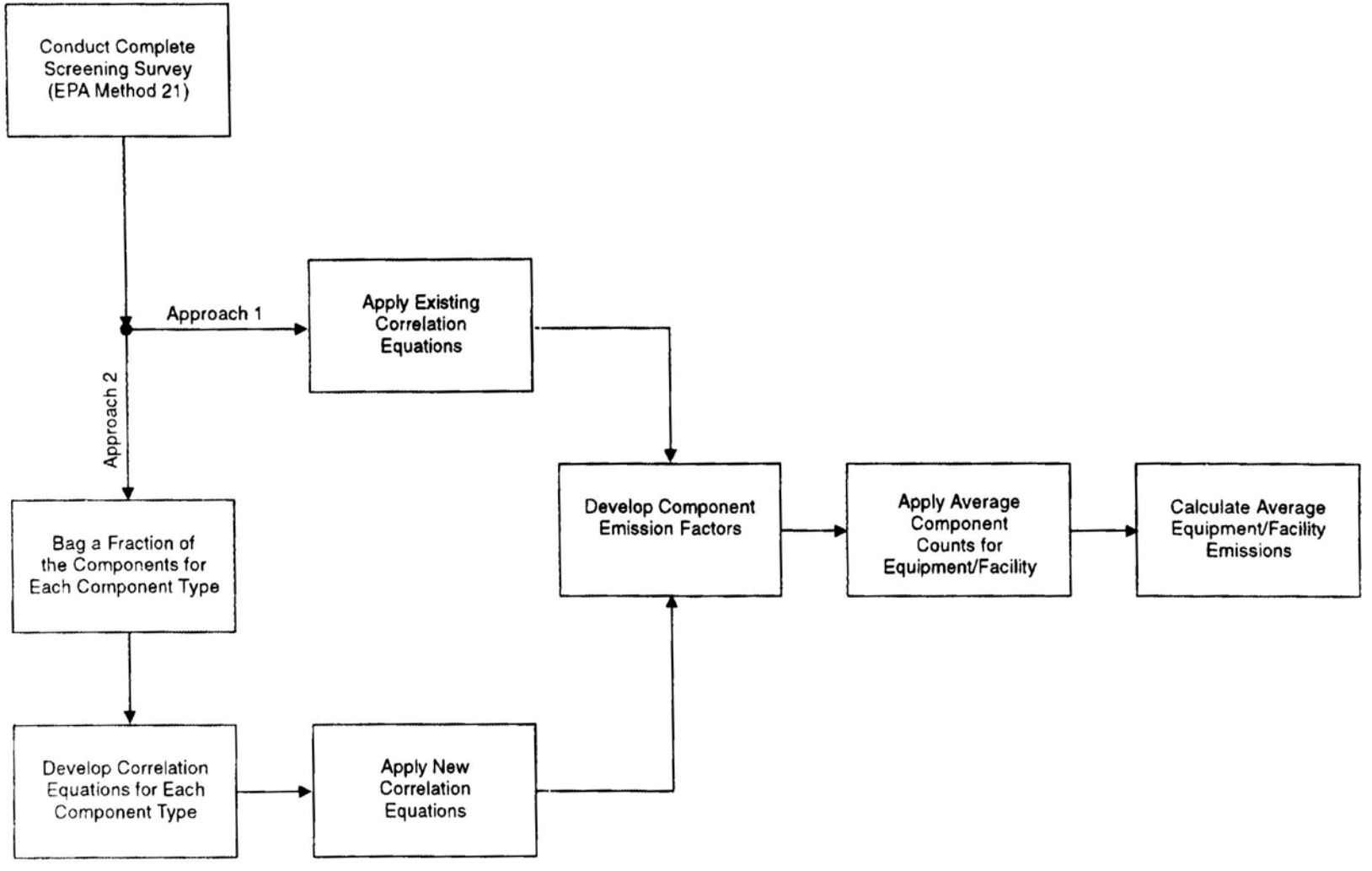

Figure 3-1. Overview of EPA Protocol

960141C.ja-RTP

pressure relief valves (PRVs), and open-ended lines (OELs). Components in heavy liquid service are not associated with gas operations. Pump seals and sample connections were considered outside of the gas industry boundary. Figures 3-2 through 3-8 show typical gate, globe, plug, and ball valves, flanged and threaded connections, pressure relief valves, and open-ended lines with the areas of possible fugitive leakage identified.

All components associated with an equipment source or facility are screened using the procedures specified in EPA Method 21. The components are categorized as to type (e.g., valves, flanges, and other connections) and also possibly by service (e.g., gas and light liquid). The maximum measured concentration, or screening value, is recorded. Levels below the detection limit of the instrument and levels above the full-scale range of the instrument are also recorded.

The portable instrument used for screening must meet the specifications and performance criteria contained in EPA Method 21. In general, an organic vapor analyzer (OVA) that uses a flame ionization detector (FID) is typically used for screening measurements. Figure 3-9 shows two typical OVA instruments used for component screening measurements. The portable instrument provides a concentration measurement of THC from the screened component.

The portable monitoring instrument has a pump that draws a continuous sample of gas from the leak interface to the detector. Because the commercially available FID instruments that meet the criteria specified in the method have limited pump capacity, the instrument does not always capture the entire leak or, for large leaks, the concentration may exceed the full-scale range. As part of the GRI/EPA methane emissions program, a dilution probe was used during collection of some of the screening data to extend the upper range of the instrument from 10,000 to 100,000 ppmv.

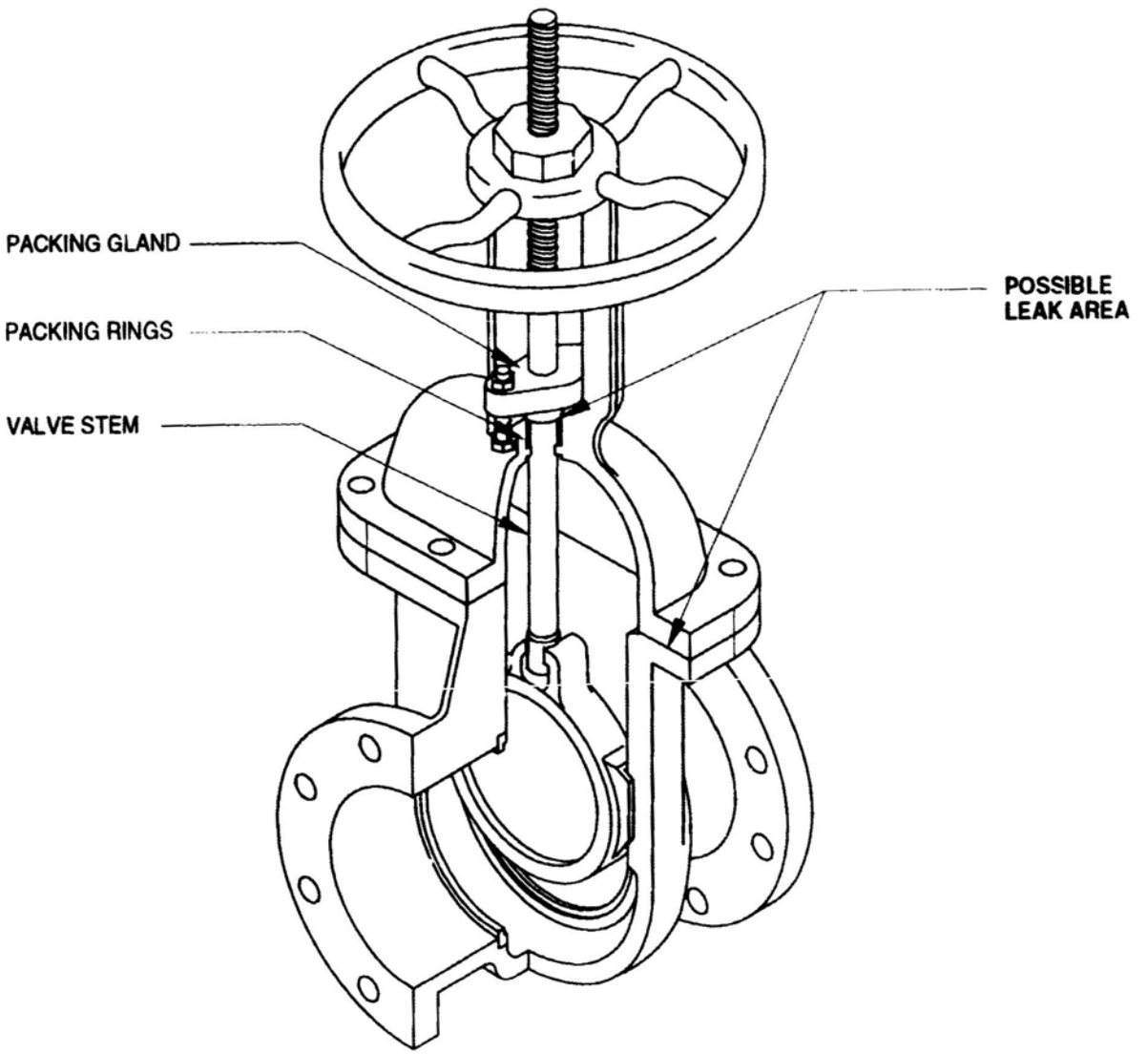

Figure 3-2. Conventional Gate Valve

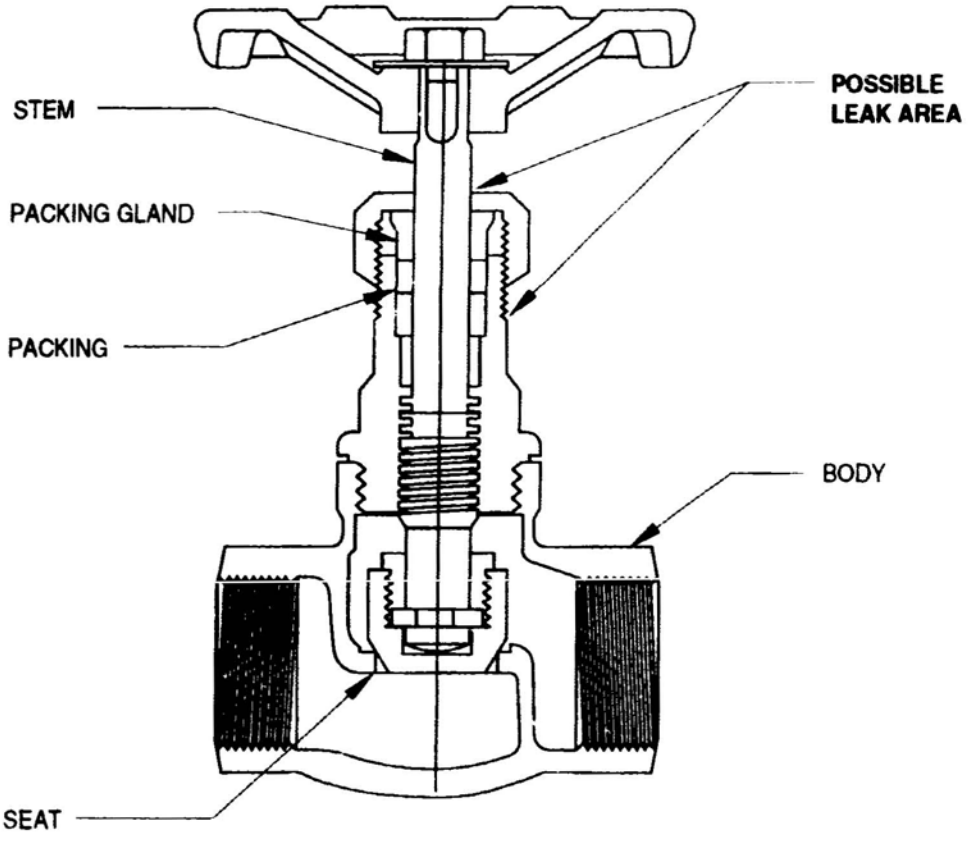

Figure 3-3. Manual Globe Valve

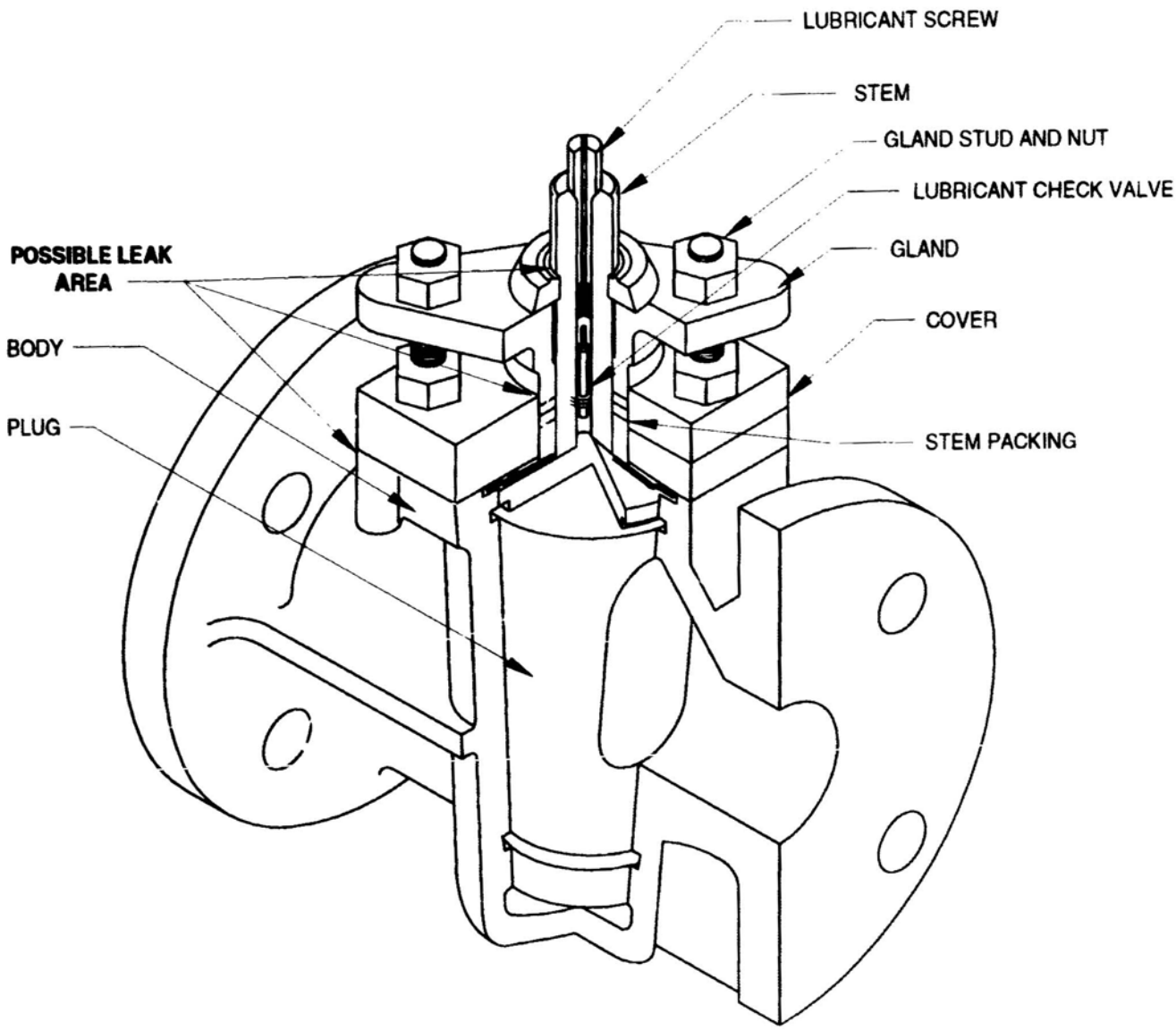

Figure 3-4. Plug Valve

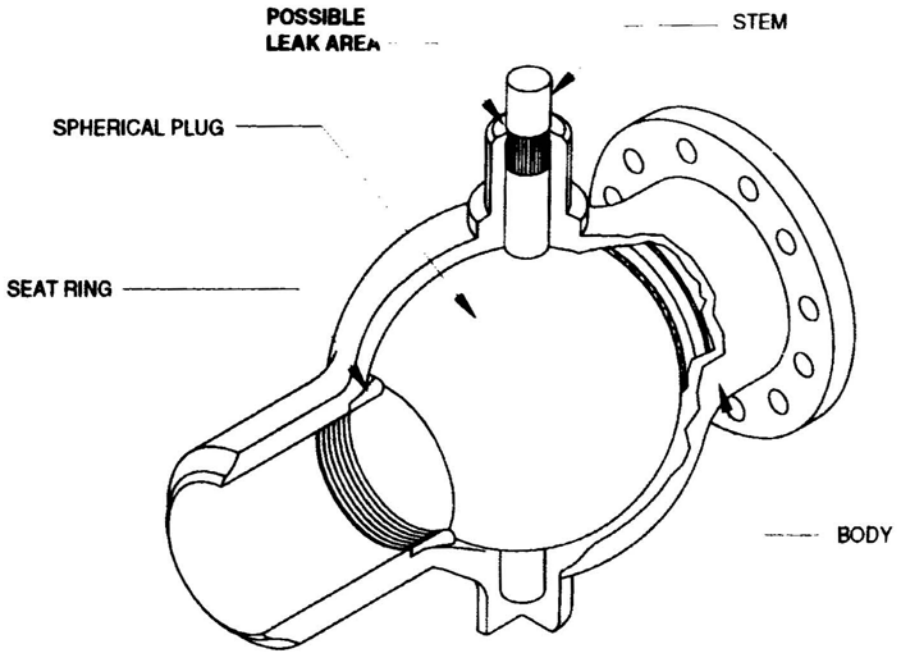

BALL VALVE (OPEN)

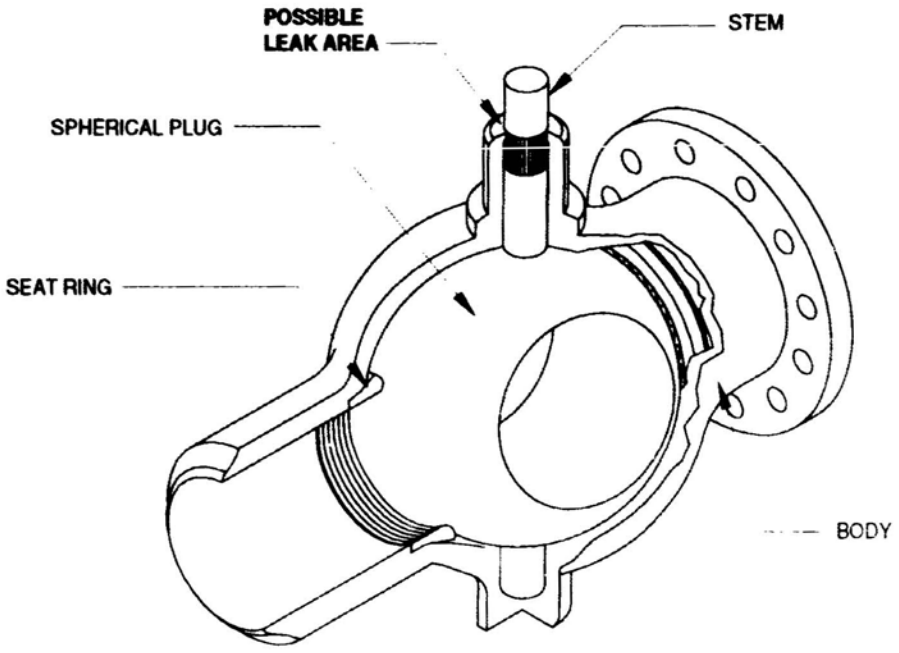

BALL VALVE (CLOSED)

Figure 3-5. Ball Valve

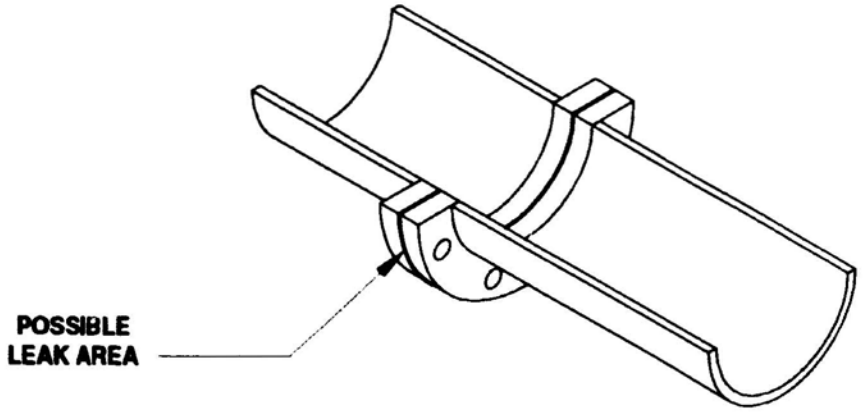

FLANGED CONNECTION

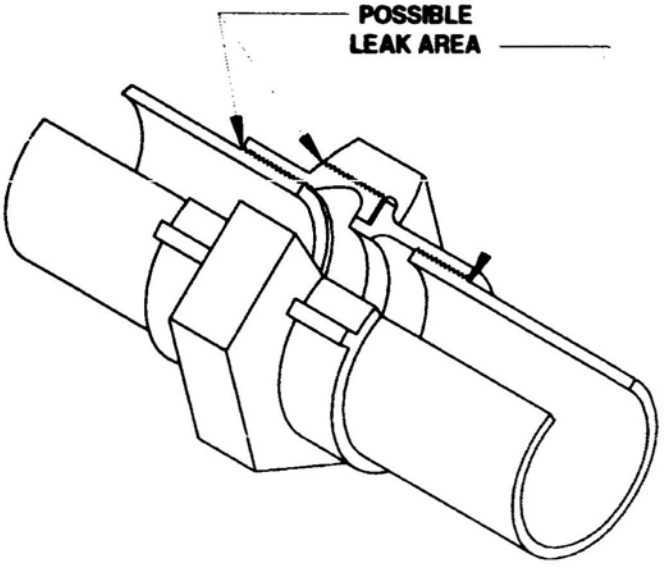

THREADED CONNECTION

Figure 3-6. Threaded and Flanged Connections

p

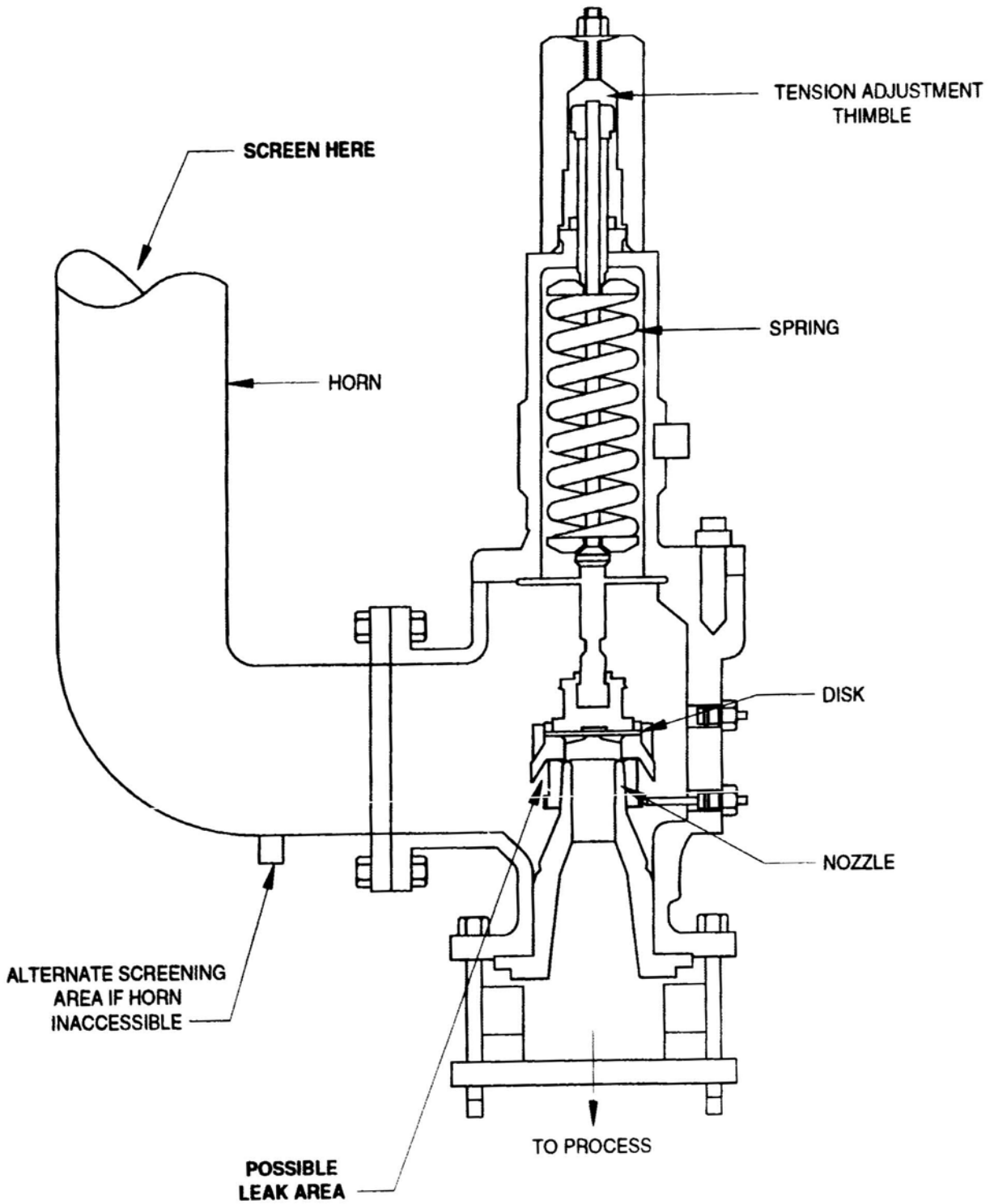

Figure 3-7. Pressure Relief Valve

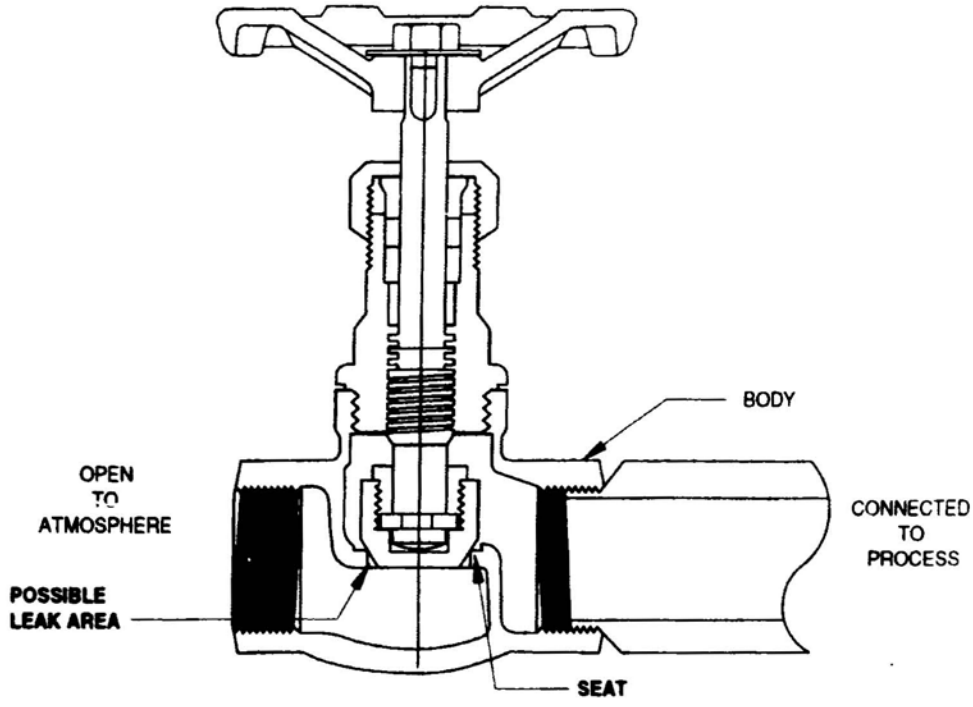

OPEN-ENDED LINE

(Globe Valve-Closed)

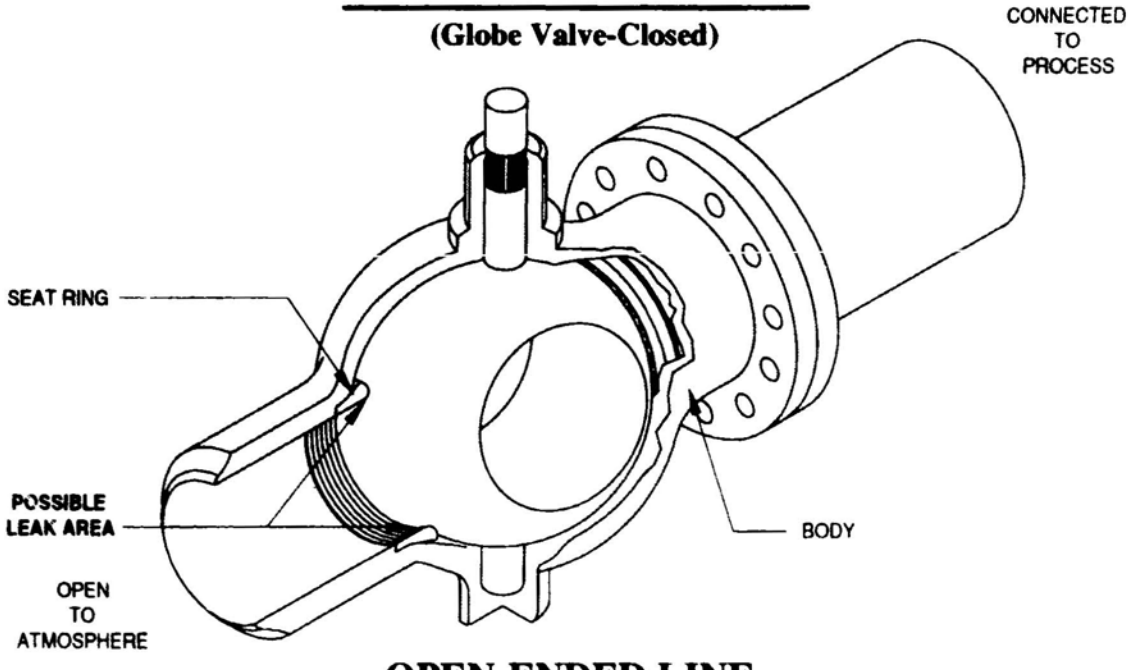

OPEN-ENDED LINE

(Ball Valve-Closed)

Figure 3-8. Open-Ended Line

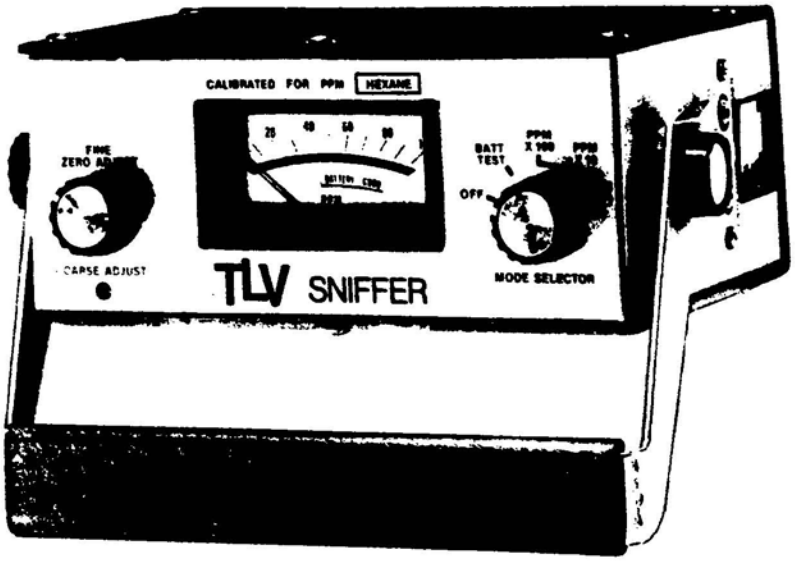

(a) TLV Sniffer

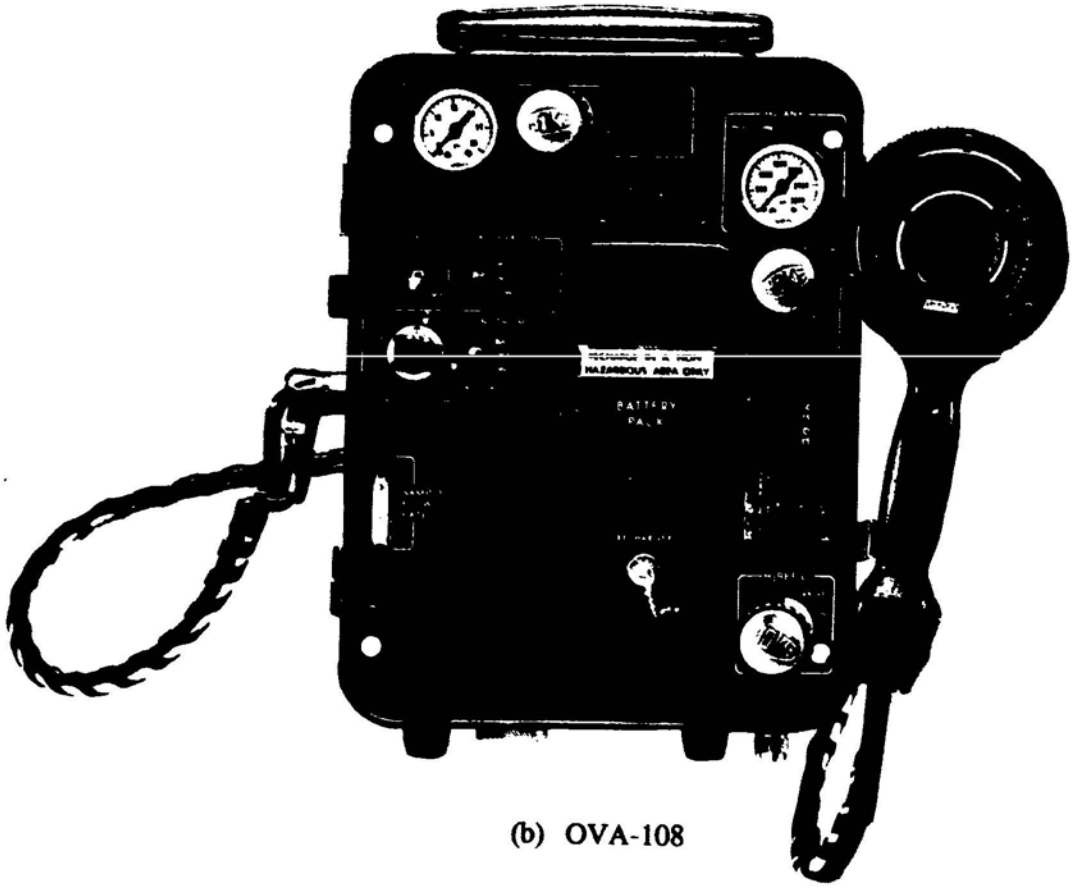

(b) OVA-108

Figure 3-9. Screening Instruments

3.1.2 Enclosure Method/Data

To convert the screening, or concentration, data to an emission rate, a correlation must be developed between the screening concentrations and the actual mass emission rates. The first step in this process is to directly measure some of the mass emission rates that were screened. The procedure used to directly measure the emission rate is an enclosure method, which is often referred to as the "bagging" technique.

The bagging technique is used to provide mass emission rates by measuring the THC concentration for a known flow rate of inert gas. In the bagging technique, a leaking component is completely enclosed in a bag and a measured flow rate of inert gas is passed through the bag either by vacuum pump or blower. The concentration of THC is then measured at the outlet of the bag after complete mixing of the inert gas with the leaking process fluid. The actual leakage rate is the product of the flow rate and the concentration measurement. In some cases, a sample of the stream flowing through the bag is collected and analyzed to speciate the hydrocarbon compounds. Figure 3-10 illustrates a typical sampling system for the enclosure measurement method.

Typically, bagging data are obtained from a relatively small, random sample of leaking components identified using the screening technique. (The reason that bagging data are not collected for all leaking components is that the method is relatively expensive and time consuming.) The bagging data are used to correlate concentration values obtained using the screening technique with mass emission rates.

3.1.3 Correlation Equation

A correlation equation is developed which relates the concentration measured during the screening test to the emission rate measured from the bagging data. Because the screening values and mass emission rates span several orders of magnitude and are highly variable, the equation is derived as a logarithmic function. In general, a correlation

p

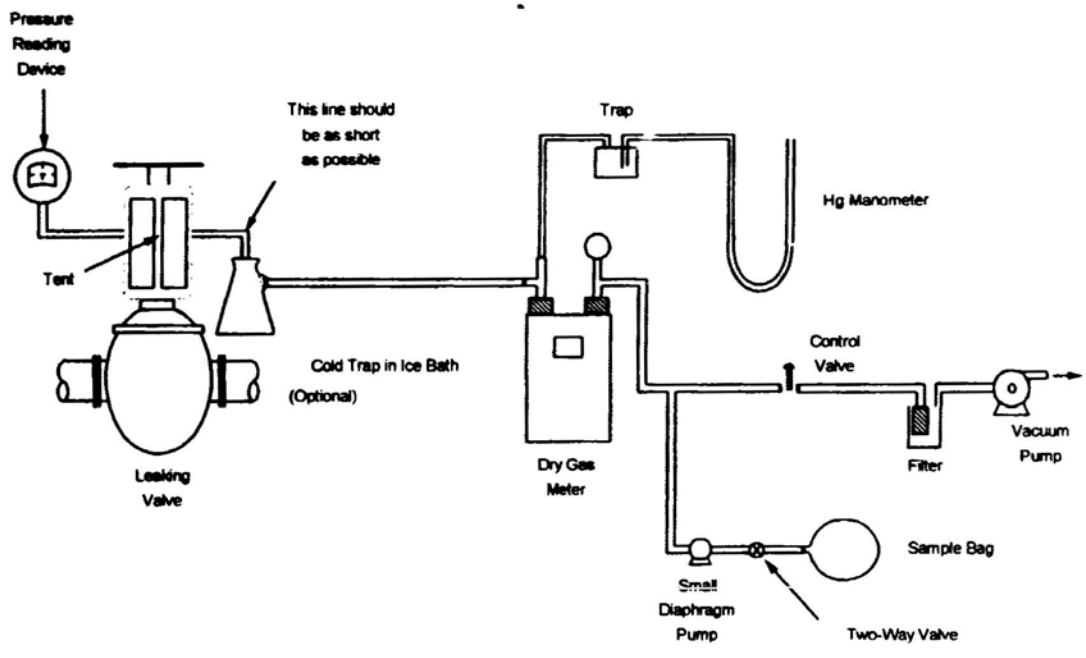

Figure 3-10. Sampling Train for Bagging a Source Using the Vacuum Method

equation is derived for each specific component type (e.g., valves, connections, open-ended lines, pressure relief valves) for a given type of facility. Figure 3-11 illustrates the correlation equation derived from the screening and bagging data for connectors in the oil and gas industry.[3]

Components associated with a specific facility type/service may have unique emission characteristics because size, manufacturer, service, age, and/or leak detection and repair practices are unique to that type of facility. Therefore, to avoid introducing bias, the correlation equation may only be applicable to similar facility types within the gas industry or other like industries.

Correlation equations derived for a given type of facility can be used to convert screening data from a similar, but different, facility into mass emission rates. Therefore, extensive bagging data are not required by every facility that desires to quantify fugitive emissions from equipment components. Screening data alone can be collected and used to predict emissions using an existing correlation equation derived from similar facilities. However, because of the high variability in the data which are used to generate the correlation equation, the uncertainty in the estimated mass emission rates generated from screening data and the correlation equation approach may be high. For many sources of fugitive emissions from the gas industry, a single set of correlation equations developed from data collected in the petroleum and gas industries were used to estimate mass emission rates from screening data.[5] Table 3-1 shows the EPA correlation equations used.

3.1.4 Pegged Source Emission Factors

Although components with large leaks typically account for only a small fraction of the total components at a facility (often 2% or less), their emissions can contribute over 90% to the total emissions from the facility. Because of the limitations of commercially available instruments which meet the EPA Method 21 criteria, components

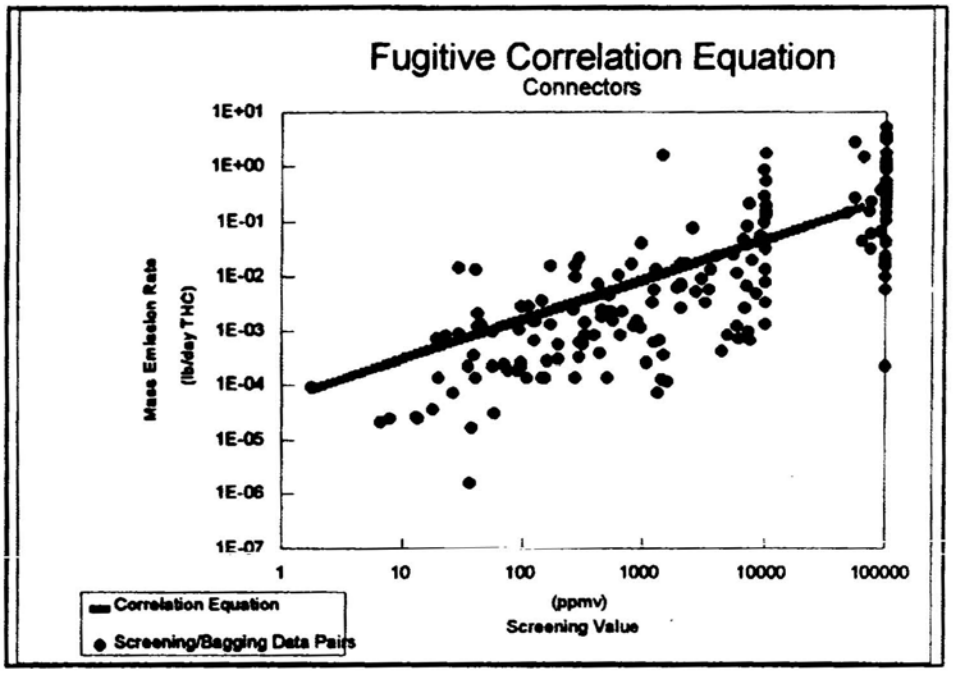

Figure 3-11. Scatter Plot of Bagging Data and Correlation Equation[3]

TABLE 3-1. CORRELATION EQUATIONS DEVELOPED BY EPA

Component Type[a]	Correlation Equation[b,c]
Connector	THC (lb/day) = $(7.99 \times 10^{-5}) \times (ISV)^{0.735}$
Flange	THC (lb/day) = $(2.35 \times 10^{-4}) \times (ISV)^{0.703}$
Open-Ended Line	THC (lb/day) = $(1.14 \times 10^{-4}) \times (ISV)^{0.704}$
Pump Seal	THC (lb/day) = $(2.55 \times 10^{-3}) \times (ISV)^{0.610}$
Valve	THC (lb/day) = $(1.21 \times 10^{-4}) \times (ISV)^{0.746}$
Other	THC (lb/day) = $(6.98 \times 10^{-4}) \times (ISV)^{0.589}$

[a] Combined for all services (e.g., gas, light liquid, heavy liquid).
[b] Per EPA study of fugitive emissions from petroleum refineries, marketing terminals, and oil and gas production.[5]
[c] THC = total hydrocarbon; ISV = instrument screening value.

leaking at a high rate can exceed the full-scale range of the screening instrument (5-15% of all leaks exceed the full-scale range of the instrument). This results in a practical upper limit to the correlation equation and requires that a separate "pegged source" emission rate be developed. Typically, the pegged source emission rate is the lognormal mean emission rate of all the bagging data collected for pegged components. Pegged source emission rates were developed for full-scale screening values of 10,000 and 100,000 ppmv based on screening data obtained without and with an instrument dilution probe, respectively.

Because of the high variability in measured leakage rates for pegged sources (refer to Figure 3-11 for a typical range in emission rates at 10,000 and 100,000 ppm screening values), an average pegged source emission factor developed from screening and bagging data has a high uncertainty. Since the majority of emissions from a typical site are due to pegged sources, estimated emissions based on screening data and EPA correlation equations, default zero, and pegged source factors also have a high uncertainty.

3.1.5 Default Zero Emission Factors

For components with screening values below the detection limit of the method or below the background concentration level, a zero response level is recorded during data collection. In an EPA study of fugitive emissions from refineries, marketing terminals, and oil and gas production,[5] default zero factors were calculated based on bagging data collected from a random sample of each component type with screening values below the detection limit of the method. The default zero factors were calculated as the lognormal mean emission rate from the bagging data for the components with a "zero" screening value. Table 3-2 presents the average default zero and pegged source factors developed in the EPA study[5] which were used for many sources of fugitive emissions in the gas industry. At sites with few leaks (e.g., sites subject to strict regulations, such as petroleum refineries and synthetic organic chemical manufacturing facilities), the value of the default zero factor can have a significant influence on the overall site emission rate.

3.2 Alternative Approach Using the GRI Hi-Flow Sampler

The GRI Hi-Flow sampler was developed to provide a more accurate evaluation of emissions from equipment leaks than the EPA protocol approach.[6,7] In general, the GRI Hi-Flow sampler, which is used to measure the emission rate of a component, is a low cost replacement for bagging measurements. Because of the lower cost and ease of use, it can be used to measure all leaking components at a facility instead of only a fraction of the leaking components, as with the bagging method.

The GRI Hi-Flow sampler has a high flow rate and generates a flow field around the component that captures the entire leak. As the sample stream passes through the instrument, both the sample flow rate and THC concentration are measured. With accurate flow rate and concentration measurements, the mass emission rate can be calculated as the product of the flow rate and concentration. Because of the high flow rate,

TABLE 3-2. DEFAULT ZERO AND PEGGED EMISSION FACTORS DEVELOPED BY EPA[a]

Component Type	Default Zero Factor,[b] lb THC/day	Pegged Factor, lb THC/day	
		>10,000 ppm[c]	>100,000 ppm[d]
Connector	3.97×10^{-4}	1.48	1.59
Flange	1.64×10^{-5}	4.50	4.44
Open-Ended Line	1.06×10^{-4}	1.59	4.18
Pump Seal	1.27×10^{-3}	3.92	8.47
Valve	4.13×10^{-4}	3.39	7.41
Other	2.12×10^{-4}	3.86	5.82

[a]Per EPA study of fugitive emissions from petroleum refineries, marketing terminals, and oil and gas production.[5]
[b]Default zero factors calculated from refinery and marketing terminal data only.
[c]Based on lognormal mean emissions using emission and screening data for screening values above 10,000 ppm (includes screening data of 100,000 ppm).
[d]Based on lognormal mean emissions using emission and screening data for screening values above 100,000 ppm.

the instrument can accurately measure the emission rate from large leaks which would exceed the full-scale range of most commercially available OVA instruments.

The GRI Hi-Flow sampler is different than the conventional approach based on the EPA protocol for the following reasons:

- The emission rate is measured directly by providing both concentration and sample flow rate measurements. In contrast, the EPA protocol approach requires the use of either bagging data to determine the emission rate from a component or use of a correlation equation to calculate the emission rate. Bagging data are very costly to obtain and the correlation equation approach has a high uncertainty.

- Because using the GRI Hi-Flow sampler is much faster than bagging, the total emissions from a given facility can be measured within a few percent. [The sampler is not well suited for generating default zero

factors because of the higher dilution rate leading to lower concentrations (i.e., lower resolution) for small leaks. However, because 90% of the emissions from a facility are from leaks that exceed the upper range of the screening instrument, emissions from components that are below the threshold (i.e., default zeros) have an insignificant impact on total emissions.]

- Because of the much higher flow rate, the sampler can accurately measure large leaks. In contrast, the EPA protocol approach classifies large leaks (i.e., those that exceed the full-scale range of the screening instrument) as pegged sources and an average emission factor (with high uncertainty) is assigned as the leak rate.

The GRI Hi-Flow sampler was used to measure fugitive emission rates from onshore production sites in the Atlantic and Great Lakes region, transmission compressor stations, and customer meters. Two general approaches were implemented for gas industry sources using the GRI Hi-Flow sampler. The first approach, used for transmission compressor stations and customer meters, included the identification of all leaking components using soaping tests. All components found to be leaking were then measured using the GRI Hi-Flow sampler. Leaks in excess of the GRI Hi-Flow sampler range were measured directly using rotameters. Component emission factors were derived from the emission rates of all components, including leaking and non-leaking components. (Non-leaking components were assumed to have a negligible emission rate.) This approach provided a direct measurement of all leaking components at a site and, consequently, an accurate estimate of emissions without the use of correlation equations.

The second general approach using the GRI Hi-Flow sampler included screening of all components at a site using EPA Method 21 with a conventional FID instrument. All components with screening values exceeding the full-scale range of the instrument (i.e., pegged sources) were measured using the GRI Hi-Flow sampler. Therefore, a direct measurement of emissions was provided for the pegged sources which contribute around 90% to total emissions. A fraction (30-50%) of the components with screening values below 10,000 ppm were also measured using the GRI Hi-Flow sampler instead of bagging measurements. A correlation equation was then developed for

components with screening values below 10,000 ppm and applied to all components screened at less than 10,000 ppm. Because all large leaks (i.e., above 10,000 ppm) were measured, this approach provides a more accurate estimate of emissions than the EPA protocol approach where a pegged source emission factor is applied. This approach was used for onshore production sites in the Atlantic and Great Lakes region.

4.0 AVERAGE EMISSIONS FROM EQUIPMENT AND FACILITIES

This section presents the component emission factors for the various segments of the industry, and how these were used to determine the average emissions from equipment and facilities. Emission factors for equipment leaks were developed for:

- Onshore production in the Atlantic and Great Lakes region (i.e., Eastern U.S.) and the rest of the U.S. (i.e., Western U.S.);
- Offshore production in the Gulf of Mexico and Pacific OCS;
- Gas processing;
- Transmission;
- Storage; and
- Customer meters.

Fugitive methane emissions were estimated for the types of equipment listed in Table 4-1.

The average emissions for a given type of equipment/facility were calculated as the product of the component emission factor (i.e., the average emission rate per component) and the average number of components, summed over all the types of components associated with the equipment/facility:

$$E_A = \sum (EF_i \times CC_i)$$

where:

E_A = Average equipment emissions for equipment/facility type A (Mscf/equipment-yr);

TABLE 4-1. EQUIPMENT CATEGORIES BY SEGMENT

- Production:

  Onshore gas production:

  - Wellhead emissions
  - Heater emissions
  - Separator emissions
  - Meters and piping
  - Gathering compressors (small)
  - Large production (gathering) compressors
  - Dehydrators

  Offshore gas production:

  - Platforms (one EF that includes all equipment on the platform)

- Transmission:
  - Pipelines
  - Transmission and storage compressor stations (reciprocating compressors, centrifugal compressors, and rest of station)

- Processing:
  - Gas processing plants (reciprocating compressors, centrifugal compressors, and rest of station)

- Distribution:
  - Customer meters (residential and commercial/industrial)

EF_i	=	Average component emission factor for component type i (Mscf/component-yr);
CC_i	=	Average component count for component type i.
i	=	Type of component (e.g., valves, connectors, open-ended lines).

This section provides documentation of the component emission factor and component count data and the resulting average equipment emissions for equipment/facilities within the gas industry where the component method was used. Table 4-2 presents a summary of the measurement programs providing data for each segment/region within the gas industry where the component method was used for estimating fugitive emissions.

4.1 Onshore Gas Production

Component emission factors for fugitive equipment leaks in gas production were estimated separately for onshore and offshore production due to differences in operational characteristics. Regional differences were found to exist between onshore production in the Eastern U.S. (i.e., Atlantic and Great Lakes region) and the Western U.S. (i.e., rest of the country, excluding the Atlantic and Great Lakes region) and between offshore production in the Gulf of Mexico and the Pacific OCS. Therefore, separate measurement programs were conducted to account for these regional differences.

4.1.1 Onshore Production in the Eastern U.S. Region

Fugitive emissions from equipment leaks were estimated separately for onshore production in the Eastern U.S. because of differences in the service, number, type, age, and leak detection and repair characteristics of equipment typically located at production sites in this region. In general, the gas produced from wells in the Eastern U.S. region has a very low hydrogen sulfide (H_2S) and carbon dioxide (CO_2) content, relatively

TABLE 4-2. EQUIPMENT LEAK MEASUREMENT PROGRAMS

Industry Area	Study	Approach	Measurement Technique(s)	Correlation Equation Used	Pegged Source Method	Default Zero Method
Production						
Onshore Eastern U.S.	Star/GRI[8]	GRI Hi-Flow	Screening and GRI Hi-Flow	Developed new correlation equation	GRI Hi-Flow measurements	Assumed negligible leakage
Onshore Western U.S.	API/GRI[9]	EPA Protocol	Screening and Bagging	EPA Correlation Equation[5]	EPA Factors[5]	EPA Factors[5]
Offshore Gulf of Mexico	API/GRI[9]	EPA Protocol	Screening and Bagging	Developed new correlation equation	Developed new pegged source factors	Developed new default zero
Offshore Pacific OCS	MMS[10]	EPA Protocol	Screening and Bagging	Developed new correlation equation	Developed new pegged source factors	[a]
Gas Plants (excluding compressors)	API/GRI[9,11]	EPA Protocol	Screening and Bagging	EPA Correlation Equation[5]	EPA Factors[5]	EPA Factors[5]
Transmission Stations (excluding compressors)	Indaco/GRI[12]	GRI Hi-Flow	Soaping and GRI Hi-Flow (all leaking components)	Direct measurement used instead of correlation equation	Direct measurement using GRI Hi-Flow	Assumed negligible leakage
Compressors (transmission, processing, storage)	Indaco/GRI[12]	GRI Hi-Flow	GRI Hi-Flow or Rotameter (all leaking components)	Direct measurement used instead of correlation equation	Direct measurement using GRI Hi-Flow and rotameter	Assumed negligible leakage
Customer Meter Sets	Indaco/GRI[13]	EPA Protocol	Screening	EPA Correlation Equation[5]	EPA Factors[5]	Assumed negligible leakage
	Indaco/GRI[14]	GRI Hi-Flow	Screening and GRI Hi-Flow	Direct measurement used instead of correlation equation	Direct measurement using GRI Hi-Flow	Assumed negligible leakage
	Star/GRI[15]	GRI Hi-Flow	Screening and GRI Hi-Flow	Direct measurement used instead of correlation equation	Direct measurement using GRI Hi-Flow	Assumed negligible leakage

[a] Developed non-emitter emission factor for components which have a screening value less than 500 ppm.

low moisture content, and low production rates per well compared to gas produced in the other regions of the United States. For this reason, there are significant regional differences. (Note: A statistical analysis of the data also confirmed a significant difference between regions.)[16]

Component emission factors for onshore production in the Eastern U.S. were based on a measurement program using a combination of screening to identify leaking components and the GRI Hi-Flow device to quantify emission rates from leaking components.[8] A total of 192 individual well sites were screened using EPA Method 21 at 12 eastern gas production facilities. All pegged source components (with screening values above 10,000 ppm) and a fraction (30-50%) of the leaking components with screening values less than 10,000 ppm were measured using the GRI Hi-Flow sampler. A correlation equation was developed from the screening and direct measurement data for components with screening values less than 10,000 ppm. This correlation equation was used to estimate emission rates from all components with screening values less than 10,000 ppm. The emission rates for components with screening values of 10,000 ppm and above were measured directly. The component emission factors were estimated based on the average emission rates of all components (i.e., calculated using the developed correlation equation or directly measured). The component emission factors were adjusted for the average methane content (69.6 wt. % or 78.8 volume % in production[17]). Table 4-3 shows the component emission factors for valves, connections, open-ended lines, and pressure relief valves.

Component counts for gas production in the Eastern U.S. were based on information collected as part of the Eastern U.S. production fugitives study.[8] Component count data were collected for gas wellheads, separators, meters and the associated above-ground piping, and gathering compressors. Few in-line heaters and glycol dehydrators exist for gas production in the Eastern region. Although no heaters and dehydrators were identified as part of the measurement study,[8] site visits and phone surveys of seven additional sites provided data used for determining the number of units in the region. For the small

TABLE 4-3. COMPONENT EMISSION FACTORS FOR EASTERN U.S. GAS PRODUCTION

Component	Total Number of Components Screened	Component Emission Factor,[a] Mscf/component-yr	90% Confidence Interval, %
Valves	4200	0.184	29
Connections	18639	0.024	20
Open-Ended Lines	260	0.42	54
Pressure Relief Valve	92	0.279	88

[a] Total methane emission rate adjusted for average 69.6 wt. % (78.8 vol. %) methane in production.[17]

number of heaters and dehydrator units that do exist in the Eastern region, the component counts were assumed to be identical to those derived from data collected in the Western U.S. (see next section). Table 4-4 presents a summary of the average component counts estimated for each type of equipment associated with gas production in the Eastern U.S. Confidence intervals were not available for the component count data provided from the measurement program.

The average equipment emissions for each type of equipment associated with gas production in the Eastern U.S. were derived as the product of the component emission factors and the average number of components, summed over all component types. Table 4-5 presents the component emission factors and component counts for each type of component associated with the equipment, along with the average equipment emissions and 90% confidence interval.

TABLE 4-4. AVERAGE COMPONENT COUNTS FOR GAS PRODUCTION EQUIPMENT IN THE EASTERN U.S.

Equipment	No. of Sites	Quantity of Equipment	Average Component Count[a]			
			Valves	Connections	Open-Ended Lines	Pressure Relief Valves
Gas Wellheads	12	192	8	38	0.5	0
Separators	11	110	1	6	0	0
Meters/Piping	12	83	12	45	0	0
Gathering Compressors	1	2	12	57	0	0
In-Line Heaters[b]	11	77	14	65	2	1
Dehydrators[b]	10	52	24	90	2	2

[a] Based on the Eastern U.S. onshore production study of fugitive emissions from equipment leaks,[8] unless otherwise noted.
[b] Based on the oil and gas production operations study of fugitive emissions from equipment leaks.[9]

TABLE 4-5. AVERAGE EQUIPMENT EMISSIONS FOR ONSHORE PRODUCTION IN THE EASTERN U.S.

Equipment Type	Component Type[a]	Component Emission Factor,[b] Mscf/component-yr	Average Component Count	Average Equipment Emissions, scf/equipment-yr	90% Confidence Interval, %
Gas Wellheads	Valve	0.184	8	2,595	27
	Connection	0.024	38		
	OEL	0.42	0.5		
Separators	Valve	0.184	1	328	27
	Connection	0.024	6		
Heaters	Valve	0.184	14	5,188	43
	Connection	0.024	65		
	OEL	0.42	2		
	PRV	0.279	1		
Glycol Dehydrators	Valve	0.184	24	7,938	35
	Connection	0.024	90		
	OEL	0.42	2		
	PRV	0.279	2		
Meters/Piping	Valve	0.184	12	3,289	30
	Connection	0.024	45		
Gathering Compressors	Valve	0.184	12	4,417	6
	Connection	0.024	57		
	OEL	0.42	2		

[a] OEL = Open-Ended Line; PRV = Pressure Relief Valve.
[b] Total methane emission rate adjusted for average 69.6 wt. % (78.8 vol. %) methane in production.[17]

4.1.2 Onshore Production in the Western U.S. Region

Component emission factors for onshore production in the Western U.S. (i.e., all regions excluding the Atlantic and Great Lakes region) were based on an API/GRI measurement program using the EPA Method 21/protocol approach to screen and bag selected components at 12 oil and gas production sites.[9] In this measurement program, screening and bagging data were collected from 83 gas wells at 4 gas production sites in the Pacific, Mountain, Central, and Gulf regions. Component emission factors were determined from the screening data that were converted to emission rates using a correlation equation developed by EPA in a separate study.[5] (The EPA study[5] developed new equipment leak correlation equations, default zero factors, and pegged source factors based on a combination of the API/GRI study[9] and data from petroleum production, refineries, and marketing terminals.)

To estimate component emission factors, Radian used the screening data from the API/GRI study[9] and the component correlation equations derived by EPA[5] for components with screening values between 10 ppm and 10,000 ppm. For components with screening values below 10 ppm, the default zero factors developed by EPA were used. For pegged source components (i.e., with screening values of 10,000 ppm and above), the 10,000 ppm pegged source factor developed by EPA was applied.

The component emission factors were recalculated instead of using those presented in the API/GRI report[9] because: (1) confidence intervals needed to be provided which were not available from the API/GRI report; (2) the API/GRI report combined pressure relief valves and compressor seals, both with relatively high emission rates, into a single "other" category (separate emission factors were recalculated for pressure relief valves and compressor seals as part of this study); and (3) because some of the site visit data combined flanges and connectors into a single category, a combined component emission factor for flanges/connectors was calculated.

The component emission factors for gas production in the Western U.S. are presented in Table 4-6 for valves, connections, open-ended lines, pressure relief valves, and compressor seals. The 90% confidence intervals for the average component emission rates were calculated based on the variability in the estimated emission rates for all components screened as part of the API/GRI study.

TABLE 4-6. COMPONENT EMISSION FACTORS FOR ONSHORE PRODUCTION IN THE WESTERN U.S.

Component	Total Number of Components Screened	Component Emission Factor,[a] Mscf/component-yr	90% Confidence Interval, %
Valves	6059	0.835	10
Connections	32513	0.114	9
Open-Ended Lines	1051	0.215	33
PRVs[b]	448	1.332	37
Compressor Seals	40	2.37	72

[a] Total methane emission rate adjusted for average 69.6 wt. % (78.8 vol. %) methane in production.[17]
[b] Pressure relief valves.

The average component counts for each piece of major process equipment associated with gas production in the Western U.S. were based on data from the API/GRI study[9] and additional data collected for this project during 13 site visits to gas production fields. Table 4-7 shows the number of production sites and equipment used as data sources and the average component counts for wellheads, separators, heaters, glycol dehydrators, meters and the associated piping, and field gathering compressors. For large reciprocating compressor stations in production, the component counts were assumed to be identical to those in transmission compressor stations (see Section 4.4).

TABLE 4-7. AVERAGE COMPONENT COUNTS FOR ONSHORE PRODUCTION IN THE WESTERN U.S.

Equipment	No. of Sites	No. of Equipment	Average Component Count[a]				
			Valves	Connections	Open-Ended Lines	PRVs[b]	Compressor Seals
Gas Wellheads	17	184	11 (30%)	36 (20%)	1 (28%)	0	0
Separators	16	183	34 (44%)	106 (38%)	6 (94%)	2 (68%)	0
Meters/Piping	12	73	14 (31%)	51 (47%)	1 (113%)	1 (150%)	0
Gathering Compressors	13	61	73 (102%)	179 (51%)	3 (50%)	4 (84%)	4 (69%)
Heaters	11	77	14 (49%)	65 (70%)	2 (66%)	1 (89%)	0
Dehydrators	10	52	24 (31%)	90 (37%)	2 (69%)	2 (53%)	0

[a] Values in parentheses represent the 90% confidence interval.
[b] Pressure relief valves.

Overall average equipment emissions were derived from the component emission factors and component counts for each equipment type. Table 4-8 presents the average equipment emissions for each type of equipment along with the 90% confidence interval.

Several transmission companies reported that some transmission-owned gathering stations were similar in size and operational characteristics to transmission compressor stations. Therefore, average equipment emissions for large reciprocating compressor stations in production were assumed equal to transmission compressor stations (Section 4.4).

4.2 Offshore Gas Production

Emissions from equipment leaks from offshore production sites in the United States were quantified based on two separate screening and bagging studies:

- The API/GRI oil and natural gas production operations study,[9] which included four offshore production sites in the Gulf of Mexico; and
- The Minerals Management Service study of seven offshore production sites in the Pacific OCS.[10]

The component emission factors and average component counts were taken directly from the field test reports.[9,10] Tables 4-9 and 4-10 present the component emission factors and average component counts, respectively, for offshore production in the Gulf of Mexico and Pacific OCS. The average component counts for offshore production in both the Gulf of Mexico and Pacific OCS were combined for all major equipment on a production platform.

TABLE 4-8. AVERAGE EQUIPMENT EMISSIONS FOR ONSHORE PRODUCTION IN THE WESTERN U.S.

Equipment Type	Component Type	Component Emission Factor,[a] Mscf/component-yr	Average Component Count	Average Equipment Emissions, scf/yr	90% Confidence Interval, %
Gas Wells	Valve	0.835	11	13,302	24
	Connection	0.114	36		
	Open-Ended Line	0.215	1		
Separators	Valve	0.835	34	44,536	33
	Connection	0.114	106		
	Open-Ended Line	0.215	6		
	Pressure Relief Valve	1.332	2		
Heaters	Valve	0.835	14	21,066	40
	Connection	0.114	65		
	Open-Ended Line	0.215	2		
	Pressure Relief Valve	1.332	1		
Dehydrators	Valve	0 835	24	33,262	25
	Connection	0.114	90		
	Open-Ended Line	0.215	2		
	Pressure Relief Valve	1.332	2		
Meters/Piping	Valve	0.835	14	19,310	30
	Connection	0.114	51		
	Open-Ended Line	0.215	1		
	Pressure Relief Valve	1.332	1		

Continued

TABLE 4-8. (Continued)

Equipment Type	Component Type	Component Emission Factor,[a] Mscf/component-yr	Average Component Count	Average Equipment Emissions, scf/yr	90% Confidence Interval, %
Gathering Compressors	Valve	0.835	73	97,729	68
	Connection	0.114	179		
	Open-Ended Line	0.215	3		
	Pressure Relief Valve	1.332	4		
	Compressor Seal	2.37	4		
Large Compressor Stations					
Station Components	[b]	[b]	[b]	3.01×10^6	102
Compressor-Related Components	[b]	[b]	[b]	5.55×10^6	65

[a] Total methane emission rate adjusted for average 69.6 wt. % (78.8 vol. %) methane in production.[17]
[b] Refer to Table 4-17 under transmission compressor stations.

TABLE 4-9. AVERAGE COMPONENT EMISSION FACTORS FOR OFFSHORE GAS PRODUCTION[a]

Component	Component Emission Factor, Mscf/component-yr	
	Gulf of Mexico[b]	Pacific OCS[c]
Valve	0.187	0.048
Connection	0.046	0.021
Open-Ended Line	0.368	0.092
Other	2.517	0.091

[a] Confidence intervals were not available for the published component emission factors.
[b] Total methane emission rate adjusted for average 79.1 wt. % methane in Gulf of Mexico.
[c] Total methane emission rate adjusted for average 72.8 wt. % methane for components in gas service in Pacific OCS.

Separate component emission factors were estimated for valves, connections, open-ended lines, and other components from offshore production in the Gulf of Mexico and Pacific OCS. Confidence intervals were not provided for the component emission factors from either study[9,10] and were not independently estimated as part of the GRI/EPA methane emissions program since this represents a small source of emissions.

Table 4-11 presents the overall average facility emissions for offshore production platforms in the Gulf of Mexico and Pacific OCS, respectively. The average facility emissions were derived as the product of the component emission factors and component counts. The 90% confidence interval was estimated based on the variability in the component count data for the Pacific OCS. For the Gulf of Mexico, the 90% confidence interval was based on the variability in total estimated emissions from each of the four platforms where measured data were collected.

4.3 Gas Processing

Component emission factors were developed for gas processing plants from screening data provided as part of the API/GRI oil and natural gas production study.[9,11] The screening data from eight gas processing plants were segregated by component type for the entire gas processing facility instead of by major equipment type. Correlation equations derived by EPA[5] were used to calculate emission rates for screening values between the background concentration and the full-scale range of the instrument. Default zero and the appropriate pegged source factors developed by EPA were used to quantify screening values below background concentrations and above the range of the instrument, respectively.

Site blowdown open-ended lines allow a facility to depressure equipment to the atmosphere for maintenance or allow the entire facility to be depressured for emergency situations. Site blowdown open-ended lines are found at gas processing plants, gas transmission stations, and gas storage stations. These open-ended lines are much larger than

TABLE 4-11. AVERAGE FACILITY EMISSIONS FOR OFFSHORE PRODUCTION

Equipment Type	Component Type	Component Emission Factor,[a,b] Mscf/component-yr	Average Component Count	Average Equipment Emissions, Mscf/yr	90% Confidence Interval
Gulf of Mexico Platform	Valve	0.187	2,207	1,064	27
	Connection	0.046	8,822		
	Open-Ended Line	0.368	326		
	Other	2.517	67		
Pacific OCS Platform	Valve	0.048	1833	430	36
	Connection	0.021	13612		
	Open-Ended Line	0.092	313		
	Other	0.091	307		

[a] Total methane emission rate adjusted for average 79.1 wt. % methane in Gulf of Mexico.
[b] Total methane emission rate adjusted for average 72.8 wt. % methane for components in gas service in Pacific OCS.

those typically used as drain valves and bleeder valves. Although site blowdown valves are infrequently operated, they have a significantly higher leakage rate than those associated with small valves.

Component emission factors from compressor-related components were estimated separately because these components were found to have significantly higher emission rates than components associated with other equipment. This results from the unique design, size, and operation of some compressor components, as well as from the vibrational wear associated with compressors. The components associated with compressors include all fittings and sealed surfaces physically connected to, or immediately adjacent to, the compressor. Two types of compressors are employed in the gas industry: reciprocating and centrifugal. In general, reciprocating compressors are driven by internal combustion (IC) engines and centrifugal compressors are driven by gas turbines.

The component emission factors for compressor-related components were based on screening data provided by a separate GRI study.[12] A detailed discussion of component emission factors from compressor-related components is given in Section 4.4. Adjustments were made for the fraction of time reciprocating and centrifugal compressors are pressurized in gas processing service (89.7% and 43.6% for reciprocating and centrifugal compressors, respectively, as shown in Appendix A). Based on data collected during site visits, some fugitive sources (i.e., pressure relief valves and compressor blowdown open-ended lines) at a few gas processing plants are routed to a flare. It was found that approximately 11% of compressors in gas processing have blowdown valves and pressure relief valves which are routed to a flare.

Table 4-12 shows the component emission factors for each component type in gas processing, with separate estimated values for compressor-related components and the remainder of the gas plant.

TABLE 4-12. COMPONENT EMISSION FACTORS FOR GAS PROCESSING[a,b]

Component	Gas Plant (non-compressor)	Reciprocating Compressor	Centrifugal Compressor
Valve	1.305 (6%)	--	--
Connection	0.117 (9%)	--	--
Open-Ended Line	0.346 (31%)	1341[c] (121%)	1341[c] (121%)
Pressure Relief Valve	0.859 (56%)	349[d,e] (171%)	--
Blowdown Open-Ended Line	230 (190%)	2035[d,e] (144%)	6447[e,f] (46%)
Compressor Seal	--	450[d] (53%)	228[f] (53%)
Miscellaneous	--	189[d] (19%)	31[f] (220%)

[a] Component emission factors in units of Mscf/component-yr. Values in parentheses represent the 90% confidence interval.
[b] Annual methane emission rate adjusted for average 87.0 vol. % methane in gas processing.[17]
[c] Starter Open-Ended Line.
[d] Adjusted for 89.7% of time reciprocating compressors in processing are pressurized.
[e] Adjusted for 11.1% of streams routed to flare.
[f] Adjusted for 43.6% of time centrifugal compressors in processing are pressurized.

Component counts for gas processing plants were based on 21 sites from the following data sets:

- Published counts from four gas plants in the API/GRI oil and gas production study;[9]
- An additional four gas plants in a later update to the API/GRI study;[11]
- Six gas plants included in the EPA study of natural gas liquids plants;[18] and
- Site visits to seven gas plants conducted by Radian International for this project.

Table 4-13 presents the average component counts for a gas plant and the reciprocating and turbine compressor engines located at a gas plant. Because only a fraction of compressor starters in gas processing use natural gas, the component counts for compressor starter open-ended lines were adjusted for the fraction of units that are operated with natural gas (i.e., 25% and 66.7% for reciprocating and centrifugal compressors, respectively).

The average facility emissions, shown in Table 4-14, were derived as the product of the component emission factors and the average component counts.

4.4 Transmission Compressor Stations

Equipment leaks from transmission compressor stations were separated into two distinct categories because of differences in leakage characteristics:

- Station components including all sources associated with the station inlet and outlet pipelines, meter runs, dehydrators, and other piping located outside of the compressor building; and
- Compressor-related components including all sources physically connected to or immediately adjacent to the compressors.

TABLE 4-13. AVERAGE COMPONENT COUNTS FOR GAS PROCESSING EQUIPMENT[a]

Component	Gas Plant (non-compressor)	Reciprocating Compressor	Centrifugal Compressor
Valve	1392 (26%)	--	--
Connection	4392 (31%)	--	--
Open-Ended Line	134 (54%)	0.25[b,c]	0.667[b]
Pressure Relief Valve	29 (35%)	1	--
Blowdown Open-Ended Line	2	1	1
Compressor Seal	--	2.5	1.5
Miscellaneous	--	1[d]	1[d]

[a] Average component counts. Values in parentheses represent the 90% confidence intervals.
[b] Starter open-ended line.
[c] Only 25% of starters for reciprocating compressors in processing use natural gas.
[d] Other components counted/measured in aggregate per compressor.

TABLE 4-14. AVERAGE FACILITY EMISSIONS FOR GAS PROCESSING PLANTS

Equipment Type	Component Type	Component Emission Factor,[a] Mscf/component-yr	Average Component Count	Average Equipment Emissions, MMscf/yr	90% Confidence Interval, %
Gas Plant (non-compressor related components)	Valve	1.305	1392	2.89	48
	Connection	0.117	4392		
	Open-Ended Line	0.346	134		
	Pressure Relief Valve	0.859	29		
	Site Blowdown Open-Ended Line	230	2		
Reciprocating Compressor	Compressor Blowdown Open-Ended Line	2035[c,d]	1	4.09	74
	Pressure Relief Valve	349[c,d]	1		
	Miscellaneous[b]	189[d]	1[e]		
	Starter Open-Ended Line	1341	0.25[f]		
	Compressor Seal	450[d]	2.5		
Centrifugal Compressor	Compressor Blowdown Open-Ended Line	6447[c,g]	1	7.75	39
	Miscellaneous[b]	31[g]	1[e]		
	Starter Open-Ended Line	1341	1		
	Compressor Seal	228[g]	1.5		

[a] Annual methane emission rate adjusted for average 87.0 vol. % methane in gas processing.[17]
[b] Includes cylinder valve covers and fuel valves.
[c] Adjusted for 11.1% of compressors which have sources routed to flare.
[d] Adjusted for 89.7% of time reciprocating compressors in processing are pressurized.
[e] Other components counted/measured in aggregate per compressor.
[f] Only 25% of starters for reciprocating compressors in processing use natural gas.g Adjusted for 43.6% of time centrifugal compressors in processing are pressurized.
[g] Adjusted for 43.6% of time centrifugal compressors in processing are pressurized.

The component emission factors, average component counts, and average facility emissions for station and compressor-related components in gas transmission are presented in Tables 4-15 through 4-17. Table 4-15 shows the component emission factors for the station components (discussed in Section 4.4.1), along with component emission factors for reciprocating and centrifugal compressor-related components (discussed in Section 4.4.2). Table 4-16 presents the average component counts for transmission compressor stations. Table 4-17 presents the average facility emissions for station and compressor-related components. The component emission factors and average component counts for station components (i.e., non-compressor related components) and compressor-related components are discussed in Sections 4.4.1 and 4.4.2, respectively.

4.4.1 Station Components

Component emission factors for station components were based on a measurement program conducted at six compressor stations using the GRI Hi-Flow sampler to quantify compressor station emissions and develop component emission factors.[12] Leaks were identified using soaping tests and all leaks found were measured using the GRI Hi-Flow sampler. [Note: Component emission factors were developed as part of the compressor station fugitive emissions measurement program[12] assuming that non-leaking components had a negligible (i.e., zero) contribution to total emissions.] The component emission factors for station components are summarized in Table 4-15.

Component counts for station components were estimated based on the following data collected at 24 sites:

- Data from eight sites tested as part of the transmission station fugitives study;[12]
- Data from nine sites visited as part of this project; and
- Data from seven sites provided by two transmission companies.

TABLE 4-15. COMPONENT EMISSION FACTORS FOR TRANSMISSION[a]

Component	Station Components[b]		Reciprocating Compressor-Related Components		Centrifugal Compressor-Related Components	
	Component Emission Factor, Mscf/comp-yr	90% Confidence Interval	Component Emission Factor, Mscf/comp-yr	90% Confidence Interval	Component Emission Factor, Mscf/comp-yr	90% Confidence Interval
Valve	0.867	--	--	--	--	--
Control Valve	8.0	--	--	--	--	--
Connection	0.147	--	--	--	--	--
Open-Ended Line	11.2	--	--	--	--	--
Site Blowdown Open-Ended Line	264	84%	--	--	--	--
Pressure Relief Valve	6.2	--	372[d]	171%	--	--
Compressor Blowdown Open-Ended Line	--	--	3683[d]	96%	9352[d]	38%
Compressor Starter Open-Ended Line	--	--	--[e]		1440	121%
Compressor Seal	--	--	396[d,f]	53%	165[d]	53%
Miscellaneous[c]	--	--	180[d]	19%	18[d]	223%

[a] Annual methane emission rate adjusted for average 93.4 vol. % methane in gas transmission.[17]
[b] Excludes components physically connected to or directly adjacent to compressor.
[c] Includes cylinder valve covers and fuel valves associated with compressors.
[d] Adjusted for the fraction of time the compressor is pressurized (79.1% and 24.2% for reciprocating and centrifugal compressors, respectively).
[e] Reciprocating compressor starters were assumed to use compressed air or electricity instead of natural gas based on site visit data (see Appendix A).
[f] Includes adjustment for seals equipped with Static-Pac®.

TABLE 4-16. AVERAGE COMPONENT COUNTS FOR TRANSMISSION

Component	Station Components[a]		Reciprocating Compressor-Related Components	Centrifugal Compressor-Related Components
	Average Component Count	90% Confidence Interval	Average Component Count	Average Component Count
Valve	673	26%	--	--
Control Valve	31	62%	--	--
Connection	3068	28%	--	--
Open-Ended Line	51	60%	--	--
Site Blowdown Open-Ended Line	4	49%	--	--
Pressure Relief Valve	14	45%	1	--
Compressor Blowdown Open-Ended Line	--		1	1
Compressor Starter Open-Ended Line	--		--[d]	1
Compressor Seal	--		3.3	1.5
Miscellaneous[b]	--		1[c]	1[c]

[a] Excludes components physically connected to or directly adjacent to compressor.
[b] Includes cylinder valve covers and fuel valves associated with compressors.
[c] Miscellaneous equipment counted in aggregate for compressor.
[d] Reciprocating compressor starters were assumed to use compressed air or electricity instead of natural gas.

TABLE 4-17. AVERAGE FACILITY EMISSIONS FOR TRANSMISSION

Equipment Type	Component Type	Component Emission Factor,[a] Mscf/component-yr	Average Component Count	Average Equipment Emissions, MMscf/yr	90% Confidence Interval, %
Compressor Station (non-compressor related components)	Valve	0.867	673	3.01	102
	Control Valve	8.0	31	(Note: 3.2 MMscf/yr used in national emission estimate)[e]	
	Connection	0.147	3068		
	Open-Ended Line	11.2	51		
	Pressure Relief Valve	6.2	14		
	Site Blowdown Open-Ended Line	264	4		
Reciprocating Compressor	Compressor Blowdown Open-Ended Line	3683[b]	1	5.55	65
	Pressure Relief Valve	372[b]	1		
	Miscellaneous	180[b]	1[d]		
	Compressor Starter Open-Ended Line	--[c]	--[c]		
	Compressor Seal	396[b,f]	3.3		
Centrifugal Compressor	Compressor Blowdown Open-Ended Line	9352[b]	1	11.1	34
	Miscellaneous	18[b]	1[d]		
	Compressor Starter Open-Ended Line	1440	1		
	Compressor Seal	165[b]	1.5		

[a] Annual methane emission rate adjusted for average 93.4 vol. % methane in gas transmission.[17]
[b] Adjusted for the fraction of time the compressor is pressurized (79.1% and 24.2% for reciprocating and centrifugal, respectively).
[c] Reciprocating compressor starters were assumed to use compressed air or electricity instead of natural gas.
[d] Miscellaneous equipment counted in aggregate for compressor.
[e] Adjusted for data received from one company that were not considered representative of national average.
[f] Includes adjustment for seals equipped with Static-Pac.®

The average facility emissions for the station and compressor-related components were calculated as the product of the individual component emission factors and the associated average component counts. As shown in Table 4-17, the average facility emissions are 3.2 MMscf/station-yr for the station components (excluding compressor-related components), with a 90% confidence interval of ± 102 %.

4.4.2 Compressor-Related Components

Emissions from compressor-related components were estimated separately because of the differences in leakage characteristics for components subject to vibrational conditions, in addition to the unique types of components associated with compressors. The types of components associated with compressors include blowdown open-ended lines, starter open-ended lines, pressure relief valves, compressor seals, and other components such as cylinder valve covers and fuel valves. Compressor blowdown and starter open-ended lines are unique to compressors and were found to have very high leak rates. Table 4-18 provides a breakdown of the compressor emissions by component type for reciprocating and centrifugal compressors.

TABLE 4-18. BREAKDOWN OF COMPRESSOR EMISSIONS BY COMPONENT TYPE

Component Type	Reciprocating Compressors		Centrifugal Compressors	
	Mscf/yr	%	Mscf/yr	%
Compressor Blowdown Open-Ended Line	3,683	66.4	9,352	84.6
Pressure Relief Valve	372	6.7	-	-
Miscellaneous	180	3.2	18	0.2
Compressor Starter Open-Ended Line	-	-	1,440	13.0
Compressor Seal	1,315	23.7	248	2.2
Total	5,550		11,058	

p

Compressor Blowdown Open-Ended Lines

Compressor blowdown open-ended lines allow a compressor to be depressurized when idle, and typically leak when the compressor is operating or idle. Figure 4-1 illustrates the compressor blowdown valve arrangement.

There are two primary modes of operation leading to different emission rates for compressor blowdown open-ended lines. The first operating mode is when the blowdown valve is closed and the compressor is pressurized, either during normal operation or when idle. The second operating mode is when the blowdown valve is open. This occurs when the compressor is idle, isolated from the compressor suction and discharge manifolds, and the blowdown valve is opened to depressure the compressor. (Note: Fugitive losses do not include the vented emissions from depressuring the compressor.[19]) The fugitive emission rate is higher for the second operating mode when the blowdown valve is open, since leakage occurs from the valve seats of the much larger suction and discharge valves. Separate component emission factors were developed for the two operating modes of the compressor blowdown valve open-ended line.

The component emission factors for each mode of compressor blowdown operation were estimated from measured data collected at 15 compressor stations using a rotameter to measure the large leakage rates.[12] Of the 15 compressor stations that were measured, four were operated by a company that had instituted a voluntary gas conservation program that included the investigation and repair of leaks from compressor blowdown valves in 1984. These four stations were found to have lower than average emission rates from the compressor blowdown valve when the compressor was pressurized; however, when the compressor was depressurized, the leakage rate was higher than average. These data were not considered significantly different from the rest of the measurement data and were included in the overall average emission rates. Table 4-19 presents the average emission rates for compressor blowdown valves in the pressurized and depressurized mode of operation.

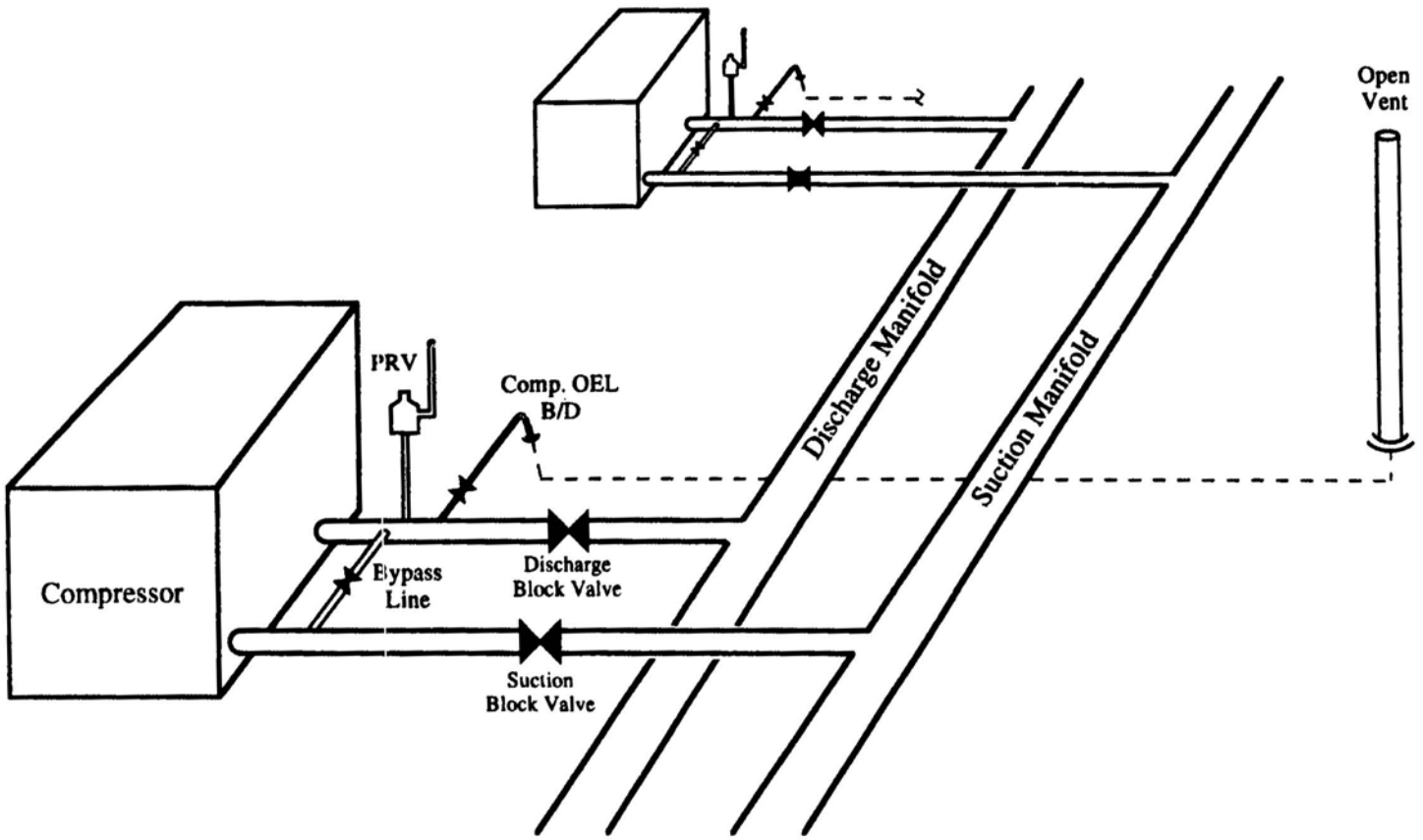

Figure 4-1. Illustration of Compressor Blowdown Valve Arrangement

TABLE 4-19. AVERAGE EMISSION RATES FOR COMPRESSOR BLOWDOWN VALVES IN PRESSURIZED/DEPRESSURIZED OPERATION

	Reciprocating Compressor	
Operating Mode	**Emission Rate, Mscf/yr**	**90% Confidence Interval**
Pressurized[a]	1,361	36%
Depressurized[b]	13,729	30%

[a] Either (a) operating or (b) idle, pressurized.
[b] Depressurized, idle.

An overall average component emission factor was derived for compressor blowdown open-ended lines by determining the fraction of time the compressor operates in each mode (i.e., pressurized and depressurized). The total fraction of compressors that are idle was estimated from the Federal Energy Regulatory Commission (FERC) database, the GRI TRANSDAT database, and a transmission company supplied database.[20] The fraction of idle compressors that are pressured was estimated using the data supplied by 13 transmission companies. Operating practices at the sites differed significantly. (A summary is provided in Appendix A for transmission, storage, and gas processing.) Overall, reciprocating compressors operated 45% of the time during the 1992 base year. Of the idle reciprocating compressors, 62% are left in a pressurized mode and 38% are depressurized. Nearly all (92%) centrifugal compressors are depressurized when idle. Table 4-20 shows the fraction of time associated with each operating mode for reciprocating and centrifugal compressors in gas transmission.

TABLE 4-20. OPERATING MODES OF COMPRESSORS IN GAS TRANSMISSION

Operating Mode	Percent of Time Associated with Operating Mode	
	Reciprocating Compressor	Centrifugal Compressor
Pressurized:		
In Operation	45.2	24.2
Idle, Pressurized	33.9	5.8
Depressurized:		
Idle, Depressurized	20.9	70.0

Based on the average emission rate and fraction of time each type of compressor is pressurized versus depressurized, an overall average component emission factor was calculated for compressor blowdown valves using Equation 1.

$$EF_{oel/comp} = (ER_{oel/pr}) \times (F_{pr}) + (ER_{id\text{-}depr}) \times (F_{id\text{-}depr}) \quad (1)$$

where:

$EF_{oel/comp}$ = component emission factor for compressor blowdown open-ended line;

$ER_{oel/pr}$ = average emission rate for compressor blowdown open-ended line when compressor is pressurized (operating or idle, pressurized);

F_{pr} = fraction of compressors that are pressurized (operating or idle, pressurized);

$ER_{id\text{-}depr}$ = average emission rate for compressor blowdown open-ended line when compressor is idle and depressurized; and

$F_{id\text{-}depr}$ = fraction of compressors that are depressurized and idle.

The overall component emission factor is 3,683 ± 96% and 9,352 ± 38% Mscf/component-yr for reciprocating and centrifugal compressor blowdown valves, respectively, as shown in Table 4-15. Each compressor has one blowdown open-ended line.

Compressor Starter Open-Ended Lines

Most compressors have a starter motor that turns the compressor shaft to start the engine. Many of the starters use natural gas as the motive force to spin the starter's turbine blades and then vent the discharge gas to the atmosphere. The inlet valve to the starter can leak and therefore is considered an open-ended line unique to compressors. Compressor starters that use compressed air or electricity instead of natural gas to power the starter motor are not sources of methane emissions. Based on data from site visits to six transmission companies, all centrifugal compressors use natural gas to power the starter motor, whereas no reciprocating compressor starter motors use natural gas. The percentages of compressors that use natural gas for starter motors in other segments are: (1) storage: 50% of centrifugal compressors and 60% of reciprocating compressors; and (2) processing: 100% of centrifugal compressors and 25% of reciprocating compressors.

Component emission factors for compressor starters were based on the measurement data collected at 15 compressor stations.[12] The average emission rate from a compressor starter open-ended line is 1,524 Mscf/component-yr ± 121%.

Compressor Seals

All compressors have a mechanical or fluid seal to minimize the flow of pressurized natural gas that leaks from the location where the shaft penetrates the compression chamber. These seals are vented to the atmosphere after passing through labyrinth seals or a seal oil trap and degassing tank. Compressor seal emissions were measured as part of the transmission station fugitives study.[12] Different component emission rates were calculated for the different operating modes of compressors, as follows:

- Operating and pressurized;
- Idle and fully pressurized;

- Idle and partially pressurized (using a fuel-saver system - reciprocating compressors only); and
- Idle and depressurized.

The pressurized seal emission rates (operating and idle) were calculated as the average of all reciprocating and centrifugal compressor seals combined, since the data indicate that the emission rates were similar. Table 4-21 shows the compressor seal emission rates based on the data collected as part of the transmission station fugitives study.[12] The average emission rate for compressor seals when the compressor is idle but pressurized is slightly lower than when the compressor is operating, due to the absence of compressor shaft motion when the compressor is idle. About 5% of reciprocating compressors in gas transmission have a fuel-saver system which allows the compressor blowdown line to go to the fuel gas system (net effect is that idle, pressurized compressors are not at full operating pressure). The fuel-saver system results in substantially lower fugitive emission rates from the compressor seal during idle time periods where the compressor is pressurized. The overall component emission factors for compressor seals (shown in Table 4-15) were calculated based on the emission rates (Table 4-21) and fraction of time (Table 4-20) for each mode of operation using Equation 2. (Note: For compressor seals, the emission rate was assumed to be negligible when the compressor is depressurized and idle.)

TABLE 4-21. COMPRESSOR SEAL EMISSION RATES

Operating Mode	Component Emission Rate, Mscf/seal-yr	90% Confidence Interval, %
Pressurized, Operating	599	30
Pressurized, Idle	531	19
Pressurized, Fuel Saver[a]	116	46

[a] Reciprocating compressors only.

$$EF_{seal} = (ER_{seal/op\text{-}pr}) \times (F_{op\text{-}pr}) + (ER_{id\text{-}pr}) \times (F_{id\text{-}pr}) + (ER_{fs\text{-}pr}) \times (F_{fs\text{-}pr}) \quad (2)$$

where:

EF_{seal} = component emission factor for compressor seals;

$ER_{seal/op\text{-}pr}$ = average emission rate for compressor seal when compressor is pressurized and operating;

$F_{op\text{-}pr}$ = fraction of compressors that are pressurized and operating;

$ER_{id\text{-}pr}$ = average emission rate for compressor seal when compressor is idle and pressurized;

$F_{id\text{-}pr}$ = fraction of compressors that are pressurized and idle;

$ER_{fs\text{-}pr}$ = average emission rate for compressor seal when idle, partially pressurized on a fuel-saver system; and

$F_{fs\text{-}pr}$ = fraction of compressors that are idle, partially pressurized on a fuel-saver system.

Reciprocating compressors have sliding shaft seals equal in number to the stages of compression. The average number of reciprocating compressor seals in transmission was estimated from data collected at four gas transmission sites with a total of 47 reciprocating compressors. The average number of seals per compressor was calculated for each site and the overall average for the four sites used as the average component count for reciprocating compressor seals. The average component count of 3.3 seals per reciprocating compressor compares well with system-wide data supplied by a major gas transmission company. An additional adjustment was made to account for the number of reciprocating compressors seals equipped with Static-Pac.® [21] According to the vendor, this device can reduce or eliminate gas leakage from idle, pressurized compressor seals. An estimated 1750 kits for reciprocating compressor seals have been sold in the gas industry.[21] These were accounted for in the component emission factor as having negligible fugitive emission rates; however, the overall industry effect was small since this device is used on less than 8% of the reciprocating compressors in transmission.

The number of centrifugal compressor seals per compressor depends on the type of compressor. As shown in Figure 4-2, centrifugal compressors with overhung rotors have one seal and beam-type compressors have two compressor seals. According to the results of a survey of three compressor vendors and one seal vendor,[22] there is an even split between the number of overhung and beam-type centrifugal compressors in the gas industry. In addition, the more recent trend toward dry gas seal technology as opposed to mechanical contact (face or sleeve seals with oil lubrication) was evaluated. Although the dry gas seal technology could potentially result in lower emissions, this is a recent trend for new installations and was estimated to have a negligible impact on emissions from compressor seals in 1992, the base year of this study.

Other Components

The component emission factors for other components associated with compressors, such as pressure relief valves, were adjusted for the average fraction of time compressors are pressurized in transmission service (79.1% and 24.2% for reciprocating and centrifugal compressors, respectively).

4.5 Gas Storage Facilities

Equipment leaks from gas storage facilities were separated into three categories due to differences in leakage characteristics:

- Station components including all sources associated with the storage station inlet and outlet lines, meter runs, dehydrators, and other piping located outside of the compressor building;
- Injection/withdrawal well components including all sources associated with the injection/withdrawal well "Christmas tree" piping configuration; and
- Compressor-related components including all sources physically connected to or immediately adjacent to the compressors.

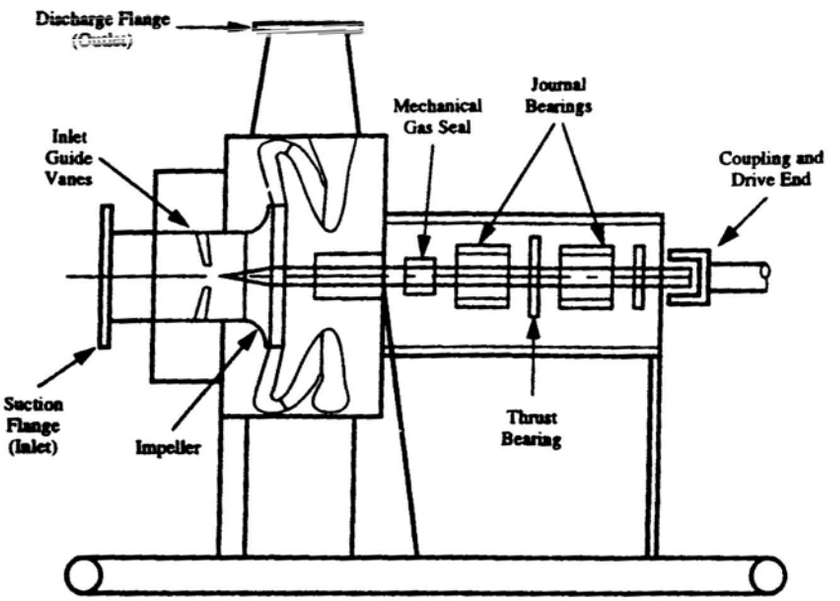

Overhung Axial-Inlet Centrifugal Compressor
(Single Seal)

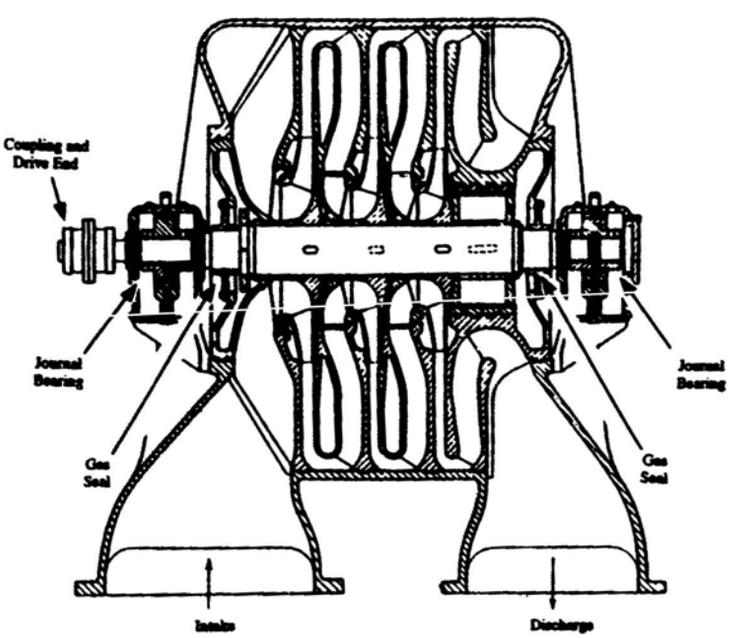

Beam-Type Centrifugal Compressor
(Two seals)

Figure 4-2. Overhung and Beam-Type Centrifugal Compressors

The component emission factors, average component counts, and average facility emissions for station, injection/withdrawal well, and compressor-related components in gas storage are presented in Tables 4-22 through 4-24. Table 4-22 presents the component emission factors for storage facility components (discussed in Section 4.5.1), compressor-related components (discussed in Section 4.5.2), and injection/withdrawal wellhead-related components (discussed in Section 4.5.3). Table 4-23 presents the average component counts for storage compressor stations. Table 4-24 presents the average facility emissions for station and compressor-related components. The component emission factors and average component counts for station-, compressor-, and injection/withdrawal wellhead-related components are discussed in Sections 4.5.1 through 4.5.3.

4.5.1 Station Components

Component emission factors for station components not associated with the compressors or wellheads are similar in type, service, and operation to those in gas transmission. Therefore, component emission factors for the station components in gas storage are the same as for gas transmission, as shown in Table 4-22.

TABLE 4-22. COMPONENT EMISSION FACTORS FOR GAS STORAGE[a]

Component	Station Components[a]	Injection/Withdrawal Wellhead-Related Components	Reciprocating Compressor-Related Components	Centrifugal Compressor-Related Components
Valve	0.867	0.918 (10%)	--	--
Connection	0.147	0.125 (9%)	--	--
Open-Ended Line	11.2	0.237 (33%)	--	--
Site Blowdown Open-Ended Line	264 (84%)	--	--	--
Pressure Relief Valve	6.2	1.464 (37%)	317[d] (171%)	--
Compressor Blowdown Open-Ended Line	--	--	5024[d] (71%)	10233[d] (35%)
Compressor Starter Open-Ended Line	--	--	1440 (121%)	1440 (121%)
Compressor Seal	--	--	300[d] (53%)	126[d] (53%)
Miscellaneous[c]	--	--	153[d] (19%)	17[d] (223%)

[a] Component emission factors in Mscf/component-yr. Values in parentheses represent the 90% confidence interval. Total methane emission rate adjusted for average 93.4 vol. % methane in gas transmission/storage.[17]

[b] Excludes components physically connected to or directly adjacent to compressor.

[c] Includes cylinder valve covers and fuel valves associated with compressors.

[d] Adjusted for the fraction of time the compressor is pressurized (67.5% and 22.4% for reciprocating and centrifugal compressors, respectively).

TABLE 4-23. AVERAGE COMPONENT COUNTS FOR GAS STORAGE[a]

Component	Station Components[b]	Injection/Withdrawal Wellhead-Related Components	Reciprocating Compressor-Related Components	Centrifugal Compressor-Related Components
Valve	1868 (120%)	30 (82%)	--	--
Connection	5571 (120%)	89 (82%)	--	--
Open-Ended Line	353 (194%)	7 (98%)	--	--
Site Blowdown Open-Ended Line	4 (74%)		--	--
Pressure Relief Valve	66 (107%)	1 (130%)	1	--
Compressor Blowdown Open-Ended Line	--	--	1	1
Compressor Starter Open-Ended Line	--	--	0.6[c]	0.5[c]
Compressor Seal	--	--	4.5	1.5
Miscellaneous[d]	--	--	1[e]	1[e]

[a] Average component counts. Values in parentheses represent the 90% confidence interval.
[b] Excludes components physically connected to or directly adjacent to compressor or wellhead.
[c] Adjusted for the fraction of compressor starters using natural gas (60% and 50% for reciprocating and centrifugal compressors, respectively).
[d] Includes cylinder valve covers and fuel valves associated with compressors.
[e] Miscellaneous equipment counted in aggregate for compressor.

TABLE 4-24. AVERAGE FACILITY EMISSIONS FOR GAS STORAGE

Equipment Type	Component Type	Component Emission Factor,[a] Mscf/component-yr	Average Component Count	Average Equipment Emissions, MMscf/yr	90% Confidence Interval, %
Storage Facility (non-compressor related components)	Valve	0.867	1868	7.85	100
	Connection	0.147	5571		
	Open-Ended Line	11.2	353		
	Pressure Relief Valve	6.2	66		
	Site Blowdown Open-Ended Line	264	4		
Injection/Withdrawal Wellhead	Valve	0.918	30	0.042	76
	Connection	0.125	89		
	Open-Ended Line	0.237	7		
	Pressure Relief Valve	1.464	1		
Reciprocating Compressors	Compressor Blowdown Open-Ended Line	5024[b]	1	7.71	48
	Pressure Relief Valve	317[b]	1		
	Miscellaneous	153[b]	1		
	Compressor Starter Open-Ended Line	1440	0.6[c]		
	Compressor Seal	300[b]	4.5		
Centrifugal Compressors	Compressor Blowdown Open-Ended Line	10233[b]	1	11.16	34
	Miscellaneous	17[b]	1		
	Compressor Starter Open-Ended Line	1440	0.5[c]		
	Compressor Seal	126[b]	1.5		

[a] Total methane emission rate adjusted for average 93.4 vol. % methane in gas transmission/storage.[17]
[b] Adjusted for the fraction of time the compressor is pressurized (67.5% and 22.4% for reciprocating and centrifugal compressors, respectively).
[c] Adjusted for the fraction of compressor starters using natural gas (60% and 50% for reciprocating and centrifugal compressors, respectively).

The average component counts for station components were based on site visits to five storage facilities as part of the GRI/EPA methane emissions program. Table 4-23 presents the average component counts for gas storage.

The overall average facility emissions were estimated as the product of the component emission factors and the average component counts. Table 4-24 presents the average facility emissions for gas storage, with the associated 90% confidence interval.

4.5.2 Compressor-Related Components

The individual component emission rates for compressor-related components (e.g., compressor blowdown open-ended lines, starter open-ended lines, and compressor seals) in gas storage are identical to those estimated for gas transmission (refer to Section 4.4). However, the overall component emission factors for compressor blowdown open-ended lines and compressor seals in storage were adjusted for the average time allocated to each mode of operation: pressurized and operating, pressurized and idle, and depressurized and idle. Table 4-25 shows the fraction of time associated with each operating mode for reciprocating and centrifugal compressors in gas storage.

The component counts for compressor starter open-ended lines were adjusted for the fraction of starters using natural gas. Based on data from five sites, 60% of reciprocating compressors and 50% of centrifugal compressors use natural gas starters in gas storage facilities.

4.5.3 Injection/Withdrawal Wellhead-Related Components

The component emission factors for onshore gas production equipment (Section 4.1.2) were used to estimate emissions from storage wellheads and related equipment. The component emission factors for onshore gas production in the Western U.S.

TABLE 4-25. OPERATING MODES OF COMPRESSORS IN GAS STORAGE

Operating Mode	Fraction of Time Associated with Operating Mode	
	Reciprocating Compressor	Centrifugal Compressor
Pressurized:		
In Operation	43.1	22.4
Idle, Pressurized	24.4	0
Depressurized:		
Idle, Depressurized	32.5	77.6

(Table 4-6) were adjusted for an average of 93.4 volume % methane from equipment leaks in gas transmission/storage.[17]

Average component counts for injection/withdrawal wellhead-related components were based on the site visit data from five storage facilities.

4.6 Customer Meter Sets

Commercial/industrial and residential customer meter sets include the meter itself and the related pipe and fittings. Leakage from customer meter sets occurs from the fittings associated with the meter, including the valve, regulator, and inlet and outlet pipe connectors. Although the joints and gaskets associated with the meter were screened, virtually no leakage was detected from the meter itself.

Equipment emission factors from customer meter sets were estimated based on test data collected from 10 local distribution companies across the United States.[13,14,15] Customer meter screening data were collected at three Eastern U.S. sites, a midwestern site, a Rocky Mountain site, and five Western U.S. sites. A summary of the total number of meter sets tested, the number and percentage of leaking meters, and the average emission rates from each of the 10 sites is shown in Table 4-26. A total of approximately 1600 meter

TABLE 4-26. SUMMARY OF EMISSION RATES FROM OUTDOOR RESIDENTIAL CUSTOMER METER USERS

Site	Number of Meters Screened	Number of Meter Sets Leaking	Percentage of Meter Sets Leaking	Average Leak Rate,[a] lb methane/day	Standard Deviation,[a] lb methane/day
Site 1 -- West Coast	134	37	27.6	0.0098	0.0239
Site 2 -- East Coast	40	29	72.5	0.0002	0.0004
Site 3 -- East Coast	158	37	23.4	0.0789	0.1753
Site 4 -- Midwest	156	8	5.1	0.0057	0.0061
Site 5 -- Rocky Mountain	188	28	14.9	0.0035	0.0082
Site 6 -- West Coast	194	5	2.6	0.0002	0.0001
Site 7 -- Southeast	201	56	27.9	0.0146	0.0328
Site 8 -- Northwest	101	31	30.7	0.0101	0.0199
Site 9 -- Southwest	150	50	33.3	0.0222	0.0404
Site 10 -- Northwest	150	40	26.7	0.0125	0.0230
Average				0.0158	

[a] Average value for all meters (i.e., leaking and non-leaking) screened at the site.

sets were tested as part of the GRI/EPA study. About 20% of the meter sets were found to be leaking at low levels. The average leak rate per meter set was only 0.0157 scf/hr.

For the majority of customer meter sets screened, the GRI Hi-Flow sampler was used to develop emission factors. For the other meter sets screened, the EPA protocol approach was used to convert the screening data into emission rates. Average emission rates from the customer meter sets screened at each site were estimated by averaging the emission rates of all the meters screened, including those where no measurable leak was detected by the screening instrument. The overall average equipment emissions for outdoor residential customer meter sets were derived by averaging the emission rates for the 10 sites.

Emissions from indoor meters are much lower than for outdoor meters because gas leaks within the confined space of a residence are readily identified and repaired. This is consistent with the findings that pressure regulating stations located in vaults have substantially lower emissions than stations located above-ground.[2] The emissions from indoor customer meters were assumed to be negligible.

Fugitive screening of commercial/industrial meter sets was conducted at four sites for a total of 149 meter sets. A summary of the total number of meters screened, the number and percentage of leaking meter sets, and the average emissions from each of the four sites is shown in Table 4-27. The overall equipment emissions from commercial/industrial customer meter sets were derived by averaging the emission rates for the four sites. The resulting average equipment emissions are 47.9 scf/meter-yr $\pm$ 35% for commercial/industrial meter sets.

TABLE 4-27. SUMMARY OF EMISSION RATES FROM COMMERCIAL/INDUSTRIAL CUSTOMER METER SETS

Site	Number of Meters Screened	Number of Meter Sets Leaking	Percentage of Meter Sets Leaking	Average Leak Rate,[a] lb methane/day	Standard Deviation,[a] lb methane/day
Site 3 -- East Coast	45	12	26.7	0.0112	0.0251
Site 4 -- Midwest	61	0	0	--	--
Site 5 -- Rocky Mountain	21	6	28.6	0.0088	0.0076
Site 6 -- West Coast	22	1	4.5	0.0018	--
Average				0.0055	

[a] Average value for all meters (i.e., leaking and non-leaking) screened at the site.

5.0 NATIONAL EMISSIONS FROM EQUIPMENT AND FACILITIES

Methane emissions from equipment leaks using the component approach were extrapolated to a national estimate for the 1992 base year. The national annual emissions are the product of the average equipment or facility emissions, as documented in Section 4, and a national activity factor. The national activity factor is the population of sources, equipment or facilities, within the U.S. natural gas industry. Although some national population statistics are published, such as the number of onshore gas wells, others were not known and had to be calculated, such as the number of separators in onshore gas production. This section documents the national activity factors that were used to develop the national emissions estimate for each source within the gas industry where the component method was used to quantitate fugitive emissions. A detailed discussion of the activity factors is provided in Volume 5 on activity factors.[23]

5.1 Onshore Gas Production

National activity factors are provided for the following onshore production equipment:

- Gas wells;
- Separators;
- Heaters;
- Dehydrators;
- Metering runs; and
- Gathering compressors.

Table 5-1 presents the national activity factor estimates for onshore production in the Eastern and Western U.S. regions, along with the 90% confidence interval.

TABLE 5-1. NATIONAL ACTIVITY FACTORS FOR GAS PRODUCTION

	Eastern U.S.		Western U.S.	
Equipment	Activity Factor, Count	90% Confidence Interval, %	Activity Factor, Count	90% Confidence Interval, %
Gas Wells	129,157	5	142,771	5
Separators	91,670	23	74,674	57
Heaters	260	196	50,740	95
Dehydrators	1,047	20	36,777	20
Metering Runs	76,262	100	301,180	100
Small Gathering Compressors	129	33	16,915	52
Large Gathering Compressors	--	--	96	100
Large Gathering Compressor Stations	--	--	12	100

The total number of active gas wells is a nationally tracked statistic. The breakdown between gas wells in the Eastern and Western U.S. regions was based on a count of producing gas wells published by the American Gas Association.[24]

Total U.S. activity factors or equipment counts for separators, heaters, metering runs, and gathering compressors were based on site visit data. For all equipment except dehydrators, the average count per well was calculated from the site visit data and used to calculate a regional estimate based on the regional well count. The total number of glycol dehydrators in gas production were based on published data from a separate GRI study.[25] The equipment counts associated with Eastern U.S. production were estimated from data collected during the measurement program conducted at 12 Eastern production sites.[8] Likewise, the equipment associated with production in the Western U.S. was estimated based

on data collected as part of the oil and gas production fugitive emissions measurement program[9] and 13 additional site visits conducted as part of this program.

The extrapolation to national methane emissions from onshore production is shown in Tables 5-2 and 5-3 for Eastern and Western U.S. regions, respectively. As shown, the national annual methane emissions from onshore production in the Eastern and Western U.S. are 0.63 Bscf ± 46% and 15.6 Bscf ± 45%, respectively.

TABLE 5-2. NATIONAL ANNUAL EMISSIONS FROM ONSHORE PRODUCTION IN THE EASTERN U.S.

Equipment	Average Equipment Emissions, scf/yr	Activity Factor, Equipment Count	Annual Methane Emissions, Bscf	90% Confidence Interval, %
Gas Well	2,595	129,157	0.34	27
Separator	328	91,670	0.03	36
Heater	5,188	260	0.001	218
Dehydrator	7,938	1,047	0.008	41
Meters/Piping	3,289	76,262	0.25	109
Gathering Compressors	4,417	129	0.0006	44
Total			0.63	46

TABLE 5-3. NATIONAL ANNUAL EMISSIONS FROM ONSHORE PRODUCTION IN THE WESTERN U.S.

Equipment	Average Equipment Emissions, scf/yr	Activity Factor, Equipment count	Annual Methane Emissions, Bscf	90% Confidence Interval, %
Gas Well	13,302	142,771	1.9	25
Separator	44,536	74,674	3.33	69
Heater	21,066	50,740	1.07	110
Dehydrator	33,262	36,777	1.22	32
Meters/Piping	19,310	301,180	5.82	109
Small Gathering Compressors	97,729	16,915	1.65	93
Large Gathering Compressors	5.55E+06	96	0.53	136
Large Gathering Compressor Stations	3.01E+06	12	0.04	176
Total			15.6	45

5.2 Offshore Gas Production

The activity factors for offshore gas production were based on data from the Minerals Management Service[26] and Offshore Data Services[27] for the Pacific OCS and Gulf of Mexico, respectively. Half of the offshore platforms were allocated to the oil industry and, therefore, were not included within the boundaries of the gas industry. Table 5-4 summarizes the activity factors and resulting annual methane emissions from offshore production. As shown, the national fugitive emissions from offshore production are 1.2 Bscf ± 29%.

TABLE 5-4. NATIONAL ANNUAL EMISSIONS FROM OFFSHORE PRODUCTION

Region	Average Facility Emissions, Mscf/yr	Activity Factor, Number of Platforms in Gas Industry	Annual Methane Emissions, Bscf	90% Confidence Interval, %
Pacific OCS	430	22	0.01	38
Gulf of Mexico	1,064	1,092	1.16	29
Total			1.17	29

5.3 Gas Processing

The number of gas processing plants in the U.S. was based upon published statistics from the *Oil & Gas Journal*.[28] Based upon data from 1992, the total number of gas plants is 726. A confidence limit of ± 2% was assigned based on engineering judgement. The number and type of compressor drivers in gas processing were based on site visit data from 11 gas plants. The average ratios of reciprocating and centrifugal compressors per plant were scaled up to national estimates by multiplying by the total number of gas plants. The confidence interval was estimated from a statistical analysis of the individual site averages. The split between reciprocating and centrifugal compressors estimated from the site visit data (i.e., 85% reciprocating and 15% centrifugal) agrees well with the results from a national survey conducted in the 1980s[29] (i.e., 90% reciprocating and 10% centrifugal).

The national annual emissions from gas processing plants was calculated as the product of the activity factor and the average facility emissions (see Section 4.3). Table 5-5 presents a summary of the national annual emissions from gas processing plants in the U.S. Emissions from compressor-related components account for the majority of the total 24.4 Bscf ± 68% fugitive losses from gas processing plants.

TABLE 5-5. NATIONAL ANNUAL EMISSIONS FROM GAS PROCESSING

Equipment/ Facility	Average Facility Emissions, MMscf/yr	Activity Factor, Number of Plants/ Compressors	Annual Methane Emissions, Bscf	90% Confidence Interval, %
Gas plants	2.89	726	2.1	48
Reciprocating Compressors	4.09	4,092	16.7	95
Centrifugal Compressors	7.75	726	5.6	91
Total			24.4	68

5.4 Transmission Compressor Stations

The activity factor for transmission compressor stations was based on nationally tracked statistics by the Federal Energy Regulatory Commission (FERC).[20] The data reported to FERC account for around 70% of the total transmission pipeline mileage. The average station per mile data from FERC was extrapolated to a national estimate based on the total transmission pipeline mileage.[24] The confidence interval was estimated as ± 10% based on engineering judgement.

The split between reciprocating and turbine compressor engines in gas transmission was estimated from the GRI TRANSDAT database,[30] adjusting for the total industry horsepower. Transmission compressor stations were split from those associated with storage according to site visit data from eight storage stations and published information on storage stations.[24] A further adjustment was made to account for compressors with electric motor drivers. The 90% confidence interval of the estimate was calculated from the variation in site visit data accounting for the storage station allocation and assignment of ± 10% error in the GRI TRANSDAT database information.

Table 5-6 presents the annual methane emissions from transmission compressor stations in the United States. As shown, the overall estimate of 50.7 Bscf ± 52% from transmission compressor stations is primarily due to fugitive emission losses from compressor-related components.

TABLE 5-6. NATIONAL ANNUAL EMISSIONS FROM TRANSMISSION COMPRESSOR STATIONS

Equipment/ Facility	Average Facility Emissions MMscf/yr	Activity Factor, Number of Stations/ Compressors	Annual Methane Emissions, Bscf	90% Confidence Interval, %
Compressor Stations	3.2	1700	5.4	103
Reciprocating Compressors	5.55	6799	37.8	68
Centrifugal Compressors	11.1	681	7.5	44
Total			50.7	52

5.5 Gas Storage Facilities

The activity factors for storage injection and withdrawal and liquefied natural gas (LNG) storage facilities were compiled from published statistics. The number of underground storage facilities and LNG storage facilities is based on published data in *Gas Facts*.[24] As previously discussed in Section 5.4, the activity factor for compressors associated with gas storage were estimated from data collected during visits to eight storage sites. The number of injection/withdrawal wells was also estimated from the site visit data.

The annual fugitive emissions from gas storage facilities are presented in Table 5-7. As shown, the total annual emissions are 16.8 Bscf ± 57%.

TABLE 5-7. NATIONAL ANNUAL EMISSIONS FROM GAS STORAGE FACILITIES

Equipment/ Facility	Average Facility Emissions, MMscf/yr	Activity Factor, Number of Facilities/ Compressors	Annual Methane Emissions, Bscf	90% Confidence Interval, %
Storage Facilities	7.85	475	3.7	100
Injection/ Withdrawal Wells	0.042	17,999	0.75	76
Reciprocating Compressors	7.71	1,396	10.8	80
Centrifugal Compressors	11.16	136	1.5	130
Total			16.8	57

5.6 Customer Meter Sets

The total number of residential and commercial/industrial customer meters in the U.S. gas industry was based on published data available in *Gas Facts*.[24] The number of residential customer meters located indoors versus outdoors was estimated based on a published regional breakdown of total customers combined with data obtained from 22 individual gas companies within different regions of the country. (Note: The number of customers in each region was assumed to be equivalent to the number of customer meters because a regional breakdown of customer meters was not available.) Table 5-8 summarizes the average percentage of customer meters located indoors in each region.

TABLE 5-8. STATISTICS ON INDOOR CUSTOMER METERS BY REGION

Region	Total Residential Customers	Average Percent Indoor Meters	Sample Size	Estimated Indoor Meters	90% Confidence Interval
New England	1,886,500	52	1	980,980	471,625[a]
Middle Atlantic	8,403,400	61	7	5,126,074	1,905,371
East North Central	11,633,500	17	7	1,977,695	1,461,663
West North Central	4,684,100	40	1	1,873,640	1,873,640[a]
South Atlantic	4,987,700	21	4	1,030,680[b]	1,030,680[a]
East South Central	2,465,200	0	--	0	123,260[c]
West South Central	5,666,600	0	--	0	283,330[c]
Mountain	3,318,700	0	--	0	331,870[c]
Pacific	9,724,500	5	2	486,225	486,225[a]
Total	52,770,200		22	11,475,294	3,317,254

[a] Estimated based on engineering judgement.
[b] Estimated for each state separately in region, since Northern States (Maryland and Delaware) are included.
[c] Estimated based on industry comments suggesting that customer meters in southern regions are essentially all located outdoors.

The estimated number of indoor meters, 11,475,294, was subtracted from the total number of reported meters, 51,524,600, to derive an estimated 40,049,306 outdoor residential customer meters in the United States. The 90% confidence interval was estimated from the data provided by companies, engineering judgement for some regions, and an estimated 5% error in the nationally reported number of residential customer meters.

For commercial/industrial customer meters, the activity factor of 4,608,000 is a nationally tracked statistic[24] and the precision is assumed to be ± 5% based on engineering judgement.

The total annual emissions from customer meter sets are presented in Table 5-9. As shown, customer meters contribute 5.8 Bscf ± 20% to annual methane emissions from the gas industry.

TABLE 5-9. NATIONAL ANNUAL EMISSIONS FROM CUSTOMER METER SETS

Category	Average Equipment Emissions, scf/yr	Activity Factor, number of meter sets	Annual Methane Emissions, Bscf	90% Confidence Interval, %
Outdoor residential meter sets	138.5	40,049,306	5.55	20
Commercial/industrial meter sets	47.9	4,608,000	0.22	35
Total			5.77	20

6.0 REFERENCES

1. Campbell, L.M., M.V. Campbell, and D.L. Epperson. *Methane Emissions from the Natural Gas Industry, Volume 9: Underground Pipelines*, Final Report, GRI-94/0257.26 and EPA-600/R-96-080i; Gas Research Institute and U.S. Environmental Protection Agency, June 1996.

2. Campbell, L.M. and B.E. Stapper. *Methane Emissions from the Natural Gas Industry, Volume 10: Metering and Pressure Regulating Stations in Natural Gas Transmission and Distribution*, Final Report, GRI-94/0257.27 and EPA-600/R-96-080j, Gas Research Institute and U.S. Environmental Protection Agency, June 1996.

3. Hausle, K.J. *Protocol for Equipment Leak Emission Estimation*, EPA-453/R-93-026 (NTIS PB93-229219), Office of Air Quality Planning and Standards, June 1993.

4. *Code of Federal Regulations, Title 40, Part 60, Appendix A*. National Archives and Records Administration, Office of the Federal Register, July 1, 1995.

5. U.S. Environmental Protection Agency. *New Equipment Leak Emission Factors for Petroleum Refineries, Gasoline Marketing, and Oil & Gas Production Operations* (EPA file LEAKS_95.WP5; background file LKS95_BK.ZIP). U.S. Environmental Protection Agency, Office of Air Quality Planning and Standards, Technology Transfer Network bulletin board system, February 1995.

6. Lott, R., M. Webb, and T. Howard. "Sampler Enables Measurement of Leaks on Site-Specific Basis." *American Oil and Gas Reporter*, March 1995, pp. 61-66.

7. Howard, T., et al. *A High Flow Rate Sampling System for Measuring Leak Rates at Natural Gas System Process Components*. 1994 International Workshop: Environmental and Economic Impacts of Natural Gas Losses, Prague, Czech Republic, March 1994.

8. Star Environmental. *Fugitive Hydrocarbon Emissions: Eastern Gas Wells*, Final Report, GRI-95/0117, Gas Research Institute, July 1995.

9. Star Environmental. *Fugitive Hydrocarbon Emissions from Oil and Gas Production Operations*, API Publication Number 4589. American Petroleum Institute, December 1993.

10. ABB Environmental Services. *Fugitive Hydrocarbon Emissions from Pacific OCS Facilities,* MMS Report 92-0043, U.S. Department of the Interior, Minerals Management Service, November 1992.

11. Star Environmental. *Emission Factors for Oil and Gas Production Operations*, API Publication No. 4615. American Petroleum Institute, January 1995.

12. Indaco Air Quality Services, Inc. *Leak Rate Measurements at U.S. Natural Gas Transmission Compressor Stations*, Gas Research Institute, July 1994.

13. Indaco Air Quality Services, Inc. *Methane Emissions from Natural Gas Customer Meters: Screening and Enclosure Studies*, Draft Report, August 15, 1992.

14. Indaco Air Quality Services. *Leak Rate Measurements for Natural Gas Customer Meters*, Gas Research Institute, 1996.

15. Star Environmental. *Fugitive Methane Emissions: Customer Meter Sets*, Final Report, GRI-95/0204, Gas Research Institute, July 1995.

16. Williamson, H.J., M.B. Hall, and M.R. Harrison. *Methane Emissions from the Natural Gas Industry, Volume 4: Statistical Methodology*, Final Report, GRI-94/0257.21 and EPA-600/R-96-080d, Gas Research Institute and U.S. Environmental Protection Agency, June 1996.

17. Shires, T.M. and M.R. Harrison. *Methane Emissions from the Natural Gas Industry, Volume 6: Vented and Combustion Source Summary*, Final Report, GRI-94/0257.23 and EPA-600/R-96-080f, Gas Research Institute and U.S. Environmental Protection Agency, June 1996.

18. Dobose, D.A., J.I. Steinmetz, G.E. Harris, and J.W. Kamas. *Frequency of Leak Occurrence and Emission Factors for Natural Gas Liquids Plants*, EMB 80-FOU-1. U.S. Environmental Protection Agency, Emissions Measurement Branch, July 1982.

19. Shires, T.M. and M.R. Harrison. *Methane Emissions from the Natural Gas Industry, Volume 7: Blow and Purge Activities*, Final Report, GRI-94/0257.24 and EPA-600/R-96-080g, Gas Research Institute and U.S. Environmental Protection Agency, June 1996.

20. Stapper, C.J. *Methane Emissions from the Natural Gas Industry, Volume 11: Compressor Driver Exhaust*, Final Report, GRI-94/0257.28 and EPA-600/R-96-080k, Gas Research Institute and U.S. Environmental Protection Agency, June 1996.

21. Telephone conversation with Paul Hanlon, C. Lee Cook (Louisville, KY) by K.E. Hummel, Radian Corporation, February 16, 1995.

22. Memorandum to M.R. Harrison, Radian Corporation, from K.E. Hummel, Radian Corporation. "Overhung versus Beam-Type Centrifugal Compressors in Transmission Pipeline Service," August 1994.

23. Stapper, B.E. *Methane Emissions from the Natural Gas Industry, Volume 5: Activity Factors*, Final Report, GRI-94/0257.22 and EPA-600/R-96-080e, Gas Research Institute and U.S. Environmental Protection Agency, June 1996.

24. American Gas Association, *Gas Facts*. Arlington, VA. 1992.

25. Wright Killen & Co. *Natural Gas Dehydration: Status and Trends*, Gas Research Institute, GRI-94/0099, January 1994.

26. Minerals Management Service. *Users Guide. MMS Outer Continental Shelf Activity Database (MOAD)*, OCS Study MMS 94-0018, U.S. Department of Interior, New Orleans, LA, April 1994.

27. Telephone conversation with David Sutherland, Offshore Data Services (Houston, Texas) by K.E. Hummel, Radian Corporation, April 27, 1994.

28. *Oil & Gas Journal*. 1992 Worldwide Gas Processing Survey Database, 1993.

29. Farmer, J.R. *Equipment Leaks of VOC in Natural Gas Production Industry-Background Information for Promulgated Standards*, EPA-450/3-82-024b (NTIS PB85-233112), May 1985.

30. Biederman, N. GRI TRANSDAT Database: Compressor Module. (prepared for Gas Research Institute). npb Associates with Tom Joyce and Associates, Chicago, IL, August 1991.

APPENDIX A

Compressor Blowdown Operating Practices

TABLE A-1. COMPRESSOR BLOWDOWN VALVE OPERATING PRACTICES - TRANSMISSION

Site	No. of Sites Represented by this Sample	Site Flare ?	Reciprocating Engines								Turbines							
			No.	Does BD Line Go To Atm	Atm BD Valve Size (in)	Separate BD Line to Low P System?	Idle Compressor Practices			% of Starters on Gas to Atm	No.	Does BD Line Go To Atm	Atm BD Valve Size (in)	Separate BD Line to Low P System?	Idle Compressor Practices			% of Starters on Gas to Atm
							De-pressure	● Op. Pressure	● Lower Pressure						De-pressure	● Op. Pressure	● Lower Pressure	
1	69	N	13	√			√ dump to fuel first			0	0	----	----	----	----	----	----	
2		N	0	Not applicable							2	√	3-4"	N	√ auto			100
3		N	0	Not applicable							2	√	3-4"	N	√ auto			
4	47	N	4	√				√			0	----	----	----	----	----	----	
5		N	7	√				√		0	0	----	----	----	----	----	----	
6		N	-	No data							-	No data						
7	12	N	0	Not applicable							2		?		√			
8		N	0	Not applicable							2		?		√			
9	84	N	25	√	2"			√		0	1							100
10	46	N	4		2"			√			1	√	?		√			
11		N	3	√	2"			√			0	----	----	----	----	----	----	
12	42	N	6	√	3"			√			0	----	----	----	----	----	----	
13		N	10	√	3"			√			3	√	?		√			
14	27	N	10	√	4"	N	****	√		0	2	√	4"	N	√			100
15		N	12	√	4"	N	√ if > 24hr	√		0	1	√	4"	N	√			100
16			7															
17			10															

TABLE A-1. (Continued)

Site	No. of Sites Represented by this Sample	Site Flare ?	Reciprocating Engines								Turbines							
			No.	Does BD Line Go To Atm	Atm BD Valve Size (in)	Separate BD Line to Low P System?	Idle Compressor Practices			% of Starters on Gas to Atm	No.	Does BD Line Go To Atm	Atm BD Valve Size (in)	Separate BD Line to Low P System?	Idle Compressor Practices			% of Starters on Gas to Atm
							De-pressure	@ Op. Pressure	@ Lower Pressure						De-pressure	@ Op. Pressure	@ Lower Pressure	
18	151	Y**	1	√	1 1/2"	N	√			0	2	√	2"	N	√			100
19		N	7	√		√			200 #	0	3	√	2"	N	√			100
20		N	4*	√	2"	N	√			0	2	√	2"	N	√			100
21	38	N	18	√			√			0	0	—	—	—	—	—	—	
22	4	N	7	√	2"	√		√			0							
23	4	N	0	Not applicable							2	√	3"	N		√		
24	33	N***	4	√	2"	N	√				1	√		N	√			
25	47		8					√										
26			9			√	√ dump to fuel first											
27			9					√										
28			9			√	√ dump to fuel first											
Totals/Avgs	604	0%	187	100%	2-4"	4/21 = 19.0%	8/21 = 38.1%	12/21 = 57.1%	1/21 = 4.8%	0.0%	26	100%	2-4"	0.0%	12/13 = 92.3%	1/13 = 7.7%	0.0%	100%

*Centrifugal compressor with reciprocating engine.
**Flare does not handle Comp BD or Site BD.
*** Site flare at 2 of 33 facilities.
****Site de-pressured in the past.

TABLE A-2. COMPRESSOR BLOWDOWN VALVE OPERATING PRACTICES - STORAGE STATIONS

Site	No. of Sites Represented by this Sample	Site Flare ?	Reciprocating Engines								Turbines							
			No.	Does BD Line Go To Atm	Atm BD Valve Size (in)	Separate BD Line to Low P System?	Idle Compressor Practices			% with Gas Starters to Atm	No.	Does BD Line Go To Atm	Atm BD Valve Size (in)	Separate BD Line to Low P System?	Idle Compressor Practices			% with Gas Starters to Atm
							De-pressure	@ Op. Pressure	@ Lower Pressure						De-pressure	@ Op. Pressure	@ Lower Pressure	
1		N	3	√	?	N												
2		N	2	√			√			0	0							
3		N	2	√			√			100	0							
4		N	2	√			√*			100	2							0
5		N	0***	√			√**			0	0							
6		N	13	√				√		100	3	√			√			100
7		N	3	√	1/2"	√			√-50#		0							
8		N	9	√	1/2"	√			√-100#		0							
Totals/Avg	Unknown	0%	34	100%	1/2 - 2"		4/7 = 57.1%	1/7 = 14.3%	2/7 = 28.6%	60%	5	100%			100%			50%

*Depressure to 900# for first 2 hours, then deP to atm if idle over 2 hours.
**Depressured to 900#, but this is very near operating pressure.
***Electrically dirven engines at this site.

TABLE A-3. COMPRESSOR BLOWDOWN VALVE OPERATING PRACTICES - GAS PROCESSING PLANTS

Site	No. of Sites Represented by this Sample	Site Flare ?	Reciprocating Engines								Turbines							
			No.	Does BD Line Go To Atm	Atm BD Valve Size (in)	Separate BD Line to Low P System?	Idle Compressor Practices			% with Gas Starters to Atm	No.	Does BD Line Go To Atm	Atm BD Valve Size (in)	Separate BD Line to Low P System?	Idle Compressor Practices			% with Gas Starters to Atm
							De-pres.	@ Op. Pres.	@ Lower Pres.						De-pressure	@ Op. Pressure	@ Lower Pressure	
1		N	7	√		N		√		100	0	Not applicable						
2		N	4	√		N		√		100	0	Not applicable						
3		Y*	20	√		N	√			0	0	Not applicable						
4		Y*	7	√		N		√		0	2							
5		N	0	Not applicable							1	√		N	√			100
6		N	0	Not applicable							2	√						100
7		Y	13	N		Y**		√		0	0	Not applicable						
8		Y*	4	N		Y**		√		0	0	Not applicable						
9		Y*	4	N		Y**		√		0	0	Not applicable						
10			4							0	0	Not applicable						
11*			17	√	2"		√				2	√	?					
Totals/Avg		1/9 = 11.1%	87				2/8 = 25.0%	6/8 = 75.0%	0.0%	25.0%					100%			100%

*Flare does not handle compressor blowdowns or equipment blowdowns.
**To flare.

APPENDIX B

Source Sheets

p

P-2
PRODUCTION SOURCE SHEET

SOURCES:	All Production Equipment (See Below)
OPERATING MODE:	Normal Operation
EMISSION TYPE:	Steady, Fugitive
ANNUAL EMISSIONS:	17.4 Bscf ± 41%

BACKGROUND:
Equipment leaks are typically low-level, unintentional losses of process fluid (gas or liquid) from the sealed surfaces of above-ground process equipment. Equipment components that tend to leak include valves, flanges and other connectors, pump seals, compressor seals, pressure relief valves, open-ended lines, and sampling connections. These components represent mechanical joints, seals, and rotating surfaces, which in time tend to wear and develop leaks.

EMISSION FACTOR: (scf/equipment-yr, see below)
In the component method for estimating emissions from equipment leaks, an average emission factor is determined for each of the basic components, such as valves, flanges, seals, and other connectors that comprise a facility. The average emission factor for each type of component is determined by measuring the emission rate from a large number of randomly selected components from similar types of facilities throughout the country. An average estimate of the emissions per equipment or facility are determined as the product of the average emission factor per component type (i.e., the component emission factor) and the average number of components associated with the major equipment or facility:

$$EF = [(N_{vlv} \times EF_{vlv}) + (N_{cn} \times EF_{cn}) + (N_{oel} \times EF_{oel}) + (N_{oth} \times EF_{oth})]$$

where:

N_x = average count of components of type x per plant, and
EF_x = average methane emission rate per component of type x.

Component emission factors for fugitive equipment leaks in gas production were estimated separately for onshore and offshore production due to differences in operational characteristics. Regional differences were found to exist between onshore production in the Eastern U.S. (i.e., Atlantic and Great Lakes region) and the Western U.S. (i.e., rest of the country, excluding the Atlantic and Great Lakes region) and between offshore production in the Gulf of Mexico and the Pacific Outer Continental Shelf (OCS). Separate measurement programs were conducted to account for these regional differences.

Onshore Production in the Eastern U.S. Region. Gas production in the Eastern U.S. accounts for only 4.2% of gross national gas production, but includes 47% of the total gas wells in the country. Component emission factors for onshore production in the Eastern U.S. were based on a measurement program conducted by GRI/Star Environmental of 192 individual well sites at 12 eastern gas production facilities. Component counts for gas wellheads, separators, meters and the associated above-ground piping, and gathering compressors were based on information collected as part of the Eastern U.S. production measurement program. Site visits and phone surveys of 7 additional sites provided data used for determining the number of heaters and dehydrators in the Eastern U.S. region. Component counts for heaters and dehydrators were assumed to be identical to those derived from data collected in the Western U.S. The following table presents the component emission factors, average component counts, and average equipment emissions for onshore gas production in the Eastern U.S. region.

Average Equipment Emissions for Onshore Production in the Eastern U.S.

Equipment Type	Component Type	Component Emission Factor, Mscf/component-yr	Average Component Count	Average Equipment Emissions,[a] scf/equipment-yr
Gas Wellheads	Valve	0.184	8	2,595 (27%)
	Connection	0.024	38	
	Open-Ended Line	0.42	0.5	
Separators	Valve	0.184	1	328 (27%)
	Connection	0.024	6	
Heaters	Valve	0.184	14	5,188 (43%)
	Connection	0.024	65	
	Open-Ended Line	0.42	2	
	Pressure Relief Valve	0.279	1	
Glycol Dehydrators	Valve	0.184	24	7,938 (35%)
	Connection	0.024	90	
	Open-Ended Line	0.42	2	
	Pressure Relief Valve	0.279	2	
Meters/Piping	Valve	0.184	12	3,289 (30%)
	Connection	0.024	45	
Gathering Compressors	Valve	0.184	12	4,417 (27%)
	Connection	0.024	57	
	Open-Ended Line	0.42	2	

[a] Values in parentheses represent the 90% confidence interval.

Onshore Production in the Western U.S. Region. Component emission factors for onshore production in the Western U.S. were based on a comprehensive fugitive emissions measurement program conducted by API/GRI at 12 oil and gas production sites. In this program, measurement data were collected from 83 gas wells at 4 gas production sites in the Pacific, Mountain, Central, and Gulf regions. The average component counts for each piece of major process equipment associated with gas production in the Western U.S. were based on data collected during the API/GRI study and additional data collected for GRI during 13 site visits to gas production fields. The following table presents the component emission factors, average component counts, and average equipment emissions for onshore gas production in the Western U.S. region.

Average Equipment Emissions for Onshore Production in the Western U.S.

Equipment Type	Component Type	Component Emission Factor, Mscf/component-yr	Average Component Count	Average Equipment Emissions,[a] scf/equipment-yr
Gas Wellheads	Valve	0.835	11	13,302 (24%)
	Connection	0.114	36	
	OEL	0.215	1	
Separators	Valve	0.835	34	44,536 (33%)
	Connection	0.114	106	
	OEL	0.215	6	
	PRV	1.332	2	
Heaters	Valve	0.835	14	21,066 (40%)
	Connection	0.114	65	
	OEL	0.215	2	
	PRV	1.332	1	
Glycol Dehydrators	Valve	0.835	24	33,262 (25%)
	Connection	0.114	90	
	OEL	0.215	2	
	PRV	1.332	2	
Meters/Piping	Valve	0.835	14	19,310 (30%)
	Connection	0.114	51	
	OEL	0.215	1	
	PRV	1.332	1	
Gathering Compressors	Valve	0.835	73	97,729 (68%)
	Connection	0.114	179	
	OEL	0.215	3	
	PRV	1.332	4	
	Compressor Seal	2.37	4	
Large Compressor Stations				
Station Components	a	a	a	3.01×10^6 (102%)
Compressor-Related Components	a	a	a	5.55×10^6 (65%)

[a] Values in parentheses represent the 90% confidence interval.
[b] Refer to T-1 source sheet for a discussion of the basis for estimated emissions from large compressor stations.

Offshore Gas Production. Emissions from equipment leaks from offshore production sites in the U.S. were based on two separate measurement programs:

- The API/GRI oil and natural gas production operations study, which included 4 offshore production sites in the Gulf of Mexico; and
- The Minerals Management Service study of 7 offshore production sites in the Pacific Outer Continental Shelf.

The component emission factors and component counts were taken directly from the field test reports from these studies. The following table presents the component emission factors, component counts, and average facility emissions for offshore production in the Gulf of Mexico and Pacific OCS.

Average Facility Emissions for Offshore Production

Equipment Type	Component Type	Component Emission Factor, Mscf/component-yr	Average Component Count	Average Facility Emissions,[a] Mscf/yr
Gulf of Mexico Platform	Valve	0.187	2,207	1,064 (27%)
	Connection	0.046	8,822	
	Open-Ended Line	0.368	326	
	Other	2.517	67	
Pacific OCS Platform	Valve	0.048	1,833	430 (36%)
	Connection	0.021	13,612	
	Open-Ended Line	0.092	313	
	Other	0.091	307	

[a] Values in parentheses represent the 90% confidence interval.

EF DATA SOURCES:

1. Emission Factors for Eastern Gas Production based upon data from the GRI/Star program for the component EF's at 12 gas production sites.
2. Fraction of methane (78.8 mol%) based on data from *Methane Emissions from the Natural Gas Industry, Volume 6: Vented and Combustion Source Summary (1)*. Conversion of emission factors from (pounds THC per day) to (methane Mscf/yr) also required estimation of gas average molecular weight. Based on data from Perry's *Chemical Engineer Handbook* (2), Table 9-15, selected most similar gas composition speciation from C_1 through C_{6+} and performed linear extrapolation from average of 3 lowest data (87 mol% methane) to 78.8 mol% methane. Resultant weight percent of 69.6 wt% methane used to speciate methane emissions.
3. Component counts in Eastern gas production were based on average counts per equipment from the GRI/Star program at 12 gas production sites. Component counts for heaters and dehydrator in the Eastern region were based on data collected in the Western region. Component counts for onshore production in the Western U.S. were based on the averages from the GRI/Star program at 4 gas production sites and GRI/Radian data from 13 site visits to gas production fields.

4. Offshore data from API/GRI/Star 20-site program for Gulf of Mexico platforms (4 platforms, site numbers 17 through 20), and Minerals Management Service/ABB Pacific OCS fugitive study (7 platforms). See respective test reports (Gulf of Mexico Offshore: API/Star 20-site study (3); Pacific OCS Offshore: MMS report 92-0043 November 30, 1992) (4).
5. Large gathering compressors and large gathering compressor station emission factors are taken from Transmission segment (see Sheet T-1).

EF PRECISION:	**Gas Wells - Eastern**	**± 27%**
	Separators - Eastern	**± 27%**
	Heaters - Eastern	**± 43%**
	Dehydrators - Eastern	**± 35%**
	Meters/piping - Eastern	**± 30%**
	Gathering Compressors - Eastern	**± 27%**
	Gas Wells - Western	**± 24%**
	Separators - Western	**± 33%**
	Heaters - Western	**± 40%**
	Dehydrators - Western	**± 25%**
	Meters/piping - Western	**± 30%**
	Gathering Compressors - Western	**± 68%**
	Large Gathering Compressors	**± 65%**
	Large Gathering Stations	**± 102%**
	Offshore (Gulf)	**± 27%**
	Offshore (Pacific)	**± 36%**

Basis:
The accuracy is rigorously propagated through the EF calculation from the range of individual measurements. Ninety percent confidence intervals were calculated for the sites using the t-statistic method. Computed 90% confidence intervals for site average component counts were combined with 90% confidence intervals for component emission factors to obtain pooled uncertainty in aggregate emission factor.

ACTIVITY FACTOR:	**(129157 Gas Wells - Eastern)**	**± 5%**
	(91670 Separators - Eastern)	**± 23%**
	(260 Heaters - Eastern)	**± 196%**
	(1047 Dehydrators - Eastern)	**± 20%**
	(76262 Meters - Eastern)	**± 100%**
	(129 Gathering Compressors - Eastern)	**± 33%**
	(142771 Gas Wells - Western)	**± 5%**
	(74674 Separators - Western)	**± 57%**
	(50740 Heaters - Western)	**± 95%**
	(36777 Dehydrators - Western)	**± 20%**
	(301180 Meters - Western)	**± 100%**
	(16915 Gathering Compressors - Western)	**± 52%**
	(96 Large Gathering Compressors)	**± 100%**
	(12 Large Gathering Stations)	**± 100%**
	(1092 Gulf of Mexico Platforms)	**± 10%**
	(22 Western Offshore)	**± 10%**

p

AF DATA SOURCES:

1. The gas well count is from A.G.A.'s *Gas Facts* 1992 data (5).
2. Eastern gas wells and equipment AFs were regionalized using site visit data. Eastern meter AF based on 0.43 meter per gas industry well (per Star Environmental). Western U.S. meter AF based on industry advisor information of 1:1 meter per gas industry well.
3. Dehydrator counts are based on 37,824 glycol dehydrators in production (see Sheet P-6 for details). Adjustment to activity factor for Eastern gas production: subtract 1,047 dehydrators (included in Eastern gas production component counts).
4. Offshore platform counts provided by Offshore Data Services, Inc., Houston, Texas, and Minerals Management Service MOAD database for producing platforms (6). Assumed 50/50 split between "oil" industry and "gas" industry.
5. Large gathering compressors and compressor station counts were estimated from FERC Form 2 database. Large gathering compressor stations were those with at least 16 stages of compression (5 compressors per station and an average of 3.3 stages per compressor). The result was extrapolated to the national total by ratioing on gathering miles covered in FERC to total gathering mileage.
6. The other equipment counts were produced from equipment count data taken during the site visits by Radian and Star. As explained in the activity factor section of the text of this report, extrapolation to national counts was done on a regional basis to account for regional equipment configuration differences.

AF PRECISION:

Basis:

1. The precision for the active wells is assigned by engineering judgement, based upon the fact that the number of active wells is tracked nationally and known accurately by A.G.A./DOE, etc.
2. The accuracy for the other equipment types is based upon rigorous propagation of error from the range in averages from the 9 production sites visited.

ANNUAL EMISSIONS: (17.4 Bscf/yr ± 7.1 Bscf/yr)
The annual emissions were determined by multiplying the average equipment emissions by the population of equipment in the segment.

Category	Emission Factor	Activity Factor	Emission Rate	Uncertainty
Gas Wellhead (Eastern U.S.)	2595 scf/yr methane	129157 gas wells (Eastern U.S.)	0.34 Bscf/yr methane	27%
Separators (Eastern U.S.)	328 scf/yr methane	91670 separators (Eastern U.S.)	0.03 Bscf/yr methane	36%
Heaters (Eastern U.S.)	5187 scf/yr methane	260 heaters (Eastern U.S.)	0.001 Bscf/yr methane	218%
Dehydrators (Eastern U.S.)	7939 scf/yr methane	1047 dehydrators (Eastern U.S.)	0.008 Bscf/yr methane	41%
Meters/Piping (Eastern U.S.)	3289 scf/yr methane	76262 meters (Eastern U.S.)	0.25 Bscf/yr methane	109%
Gathering Compressors (Eastern U.S.)	4417 scf/yr methane	129 gathering compressors (Eastern U.S.)	0.0006 Bscf/yr methane	44%
Gas Wellheads (Western U.S.)	13302 scf/yr methane	142771 gas wells (Western U.S.)	1.9 Bscf/yr methane	25%
Separators (Western U.S.)	44536 scf/yr methane	74674 separators (Western U.S.)	3.33 Bscf/yr methane	69%
Heaters (Western U.S.)	[illegible]66 scf/yr methane	50740 in-line heaters (Western U.S.)	1.07 Bscf/yr methane	110%
Dehydrators (Western U.S.)	33262 scf/yr methane	36777 dehydrators (Western U.S.)	1.22 Bscf/yr methane	32%
Meters (Western U.S.)	19310 scf/yr methane	301180 meters (Western U.S.)	5.82 Bscf/yr methane	109%
Small Gathering Compressors (Western U.S.)	97729 scf/yr methane	16915 compressors (Western U.S.)	1.65 Bscf/yr methane	93%
Large Gathering Compressors (Western U.S.)	5.55 MMscf/yr methane	96 large compressors	0.53 Bscf/yr methane	136%
Large Gathering Compressor Stations (Western U.S.)	3.01 MMscf/yr methane	12 large gathering compressor stations	0.04 Bscf/yr methane	176%
Offshore Oil/Gas (Gulf)	1064 Mscf/yr methane	1092 Gulf of Mexico platforms	1.16 Bscf/yr methane	29%
Offshore Oil/Gas ((Pacific)	430.0 Mscf/yr methane	22 platforms (Pacific)	0.01 Bscf/yr methane	38%
TOTAL			17.4 Bscf/yr methane	41%

REFERENCES

1. Shires, T.M. and M.R. Harrison. *Methane Emissions from the Natural Gas Industry, Volume 6. Vented and Combustion Source Summary*, Final Report, GRI-94/0257.23 and EPA-600/R-96-080f; Gas Research Institute and U.S. Environmental Protection Agency, June 1996.

2. Perry, J.H. (ed). *Chemical Engineers Handbook* 5th Edition, McGraw-Hill Book Co., New York, NY, 1984.

3. Star Environmental. *Emission Factors for Oil and Gas Production Operations*, API Publication No., 4615. American Petroleum Institute, January 1995.

4. Minerals Management Service. *Fugitive Hydrocarbon Emissions from Pacific OCS Facilities*. Volume 1, Final Report. MMS 92-0043. U.S. Department of Interior, New Orleans, LA, November 30, 1992.

5. American Gas Association. *Gas Facts*, Arlington, VA. 1992.

6. Minerals Management Service. Users Guide. *MMS Outer Continental Shelf Activity Database (MOAD)*, OCS Study MMS 94-0018, U.S. Department of the Interior, New Orleans, LA, April 1994.

p

GP-1
PROCESSING SOURCE SHEET

SOURCES:	All Equipment at Gas Processing Plants
OPERATING MODE:	Normal Operation
EMISSION TYPE:	Steady and Unsteady, Fugitive
ANNUAL EMISSIONS:	24.45 Bscf ± 68%

BACKGROUND:
Equipment leaks are typically low-level, unintentional losses of process fluid (gas or liquid) from the sealed surfaces of above-ground process equipment. Equipment components that tend to leak include valves, flanges and other connectors, pump seals, compressor seals, pressure relief valves, open-ended lines, and sampling connections. These components represent mechanical joints, seals, and rotating surfaces, which in time tend to wear and develop leaks.

EMISSION FACTOR:
a. Plant = 2.89 MMscf/yr methane per plant
b. Reciprocating Compressor = 4.09 MMscf/yr methane per recip
c. Centrifugal Compressor = 7.75 MMscf/yr methane per turbine

The average fugitive emission rate for gas processing plants was determined to be composed of two parts: a) plant component counts (excluding compressor components), and b) compressor-related components.
Fugitives from the compressor-related components have much higher emission factors than components in the rest of the facility. Part of this is due to the high vibration that compressors generate, but most of the larger emissions are due to unique compressor components, as explained below.

a. The contribution from non-compressor components was determined by multiplying the average component count by the component emission factor. The number of components was subdivided into valves, connections/flanges, small open-ended lines, site blowdown (B/D) OELs, control valves, and other components (such as pressure relief valves). (Tubing components were determined to be insignificant.) All of these components are typical fugitive components (as described in the EPA Fugitive Emissions Protocol) with the exception of control valves and site B/D OELs. Control valves emit at a higher rate than manual isolation valves since their packing is stressed more often as they are activated much more frequently. Site B/D OELs are the large diameter emergency station blowdown valves that are designed to depressure the entire site to the atmosphere when the valve is opened.

The component emission factors for gas plant components (i.e., non-compressor related) were based on an API/GRI measurement program conducted at 8 gas plants. The average facility emissions are then calculated as follows:

$$EF = [(N_{vlv} \times EF_{vlv}) + (N_{cn} \times EF_{cn}) + (N_{oel} \times EF_{oel}) + (N_{prv} \times EF_{prv}) + (N_{site\ B/D} \times EF_{site\ B/D})]$$

where:
N_x = average count of components of type x per plant, and
EF_x = average methane emission rate per component of type x.

b. The contribution from compressor-related components was obtained by multiplying the average number of fugitive components per compressor engine by component emission factors. The component emission factors were based on the GRI/Indaco measurement program conducted at 15 compressor stations. Some compressor components are unique, while others have higher leak rates than identical components elsewhere in the plant due to vibration. Compressors have the following types of components:

1) Comp. B/D OEL	A blowdown (B/D) valve to the atmosphere that can depressure the compressor when idle. The B/D valve or the large unit block valves (depending on the operating status of the compressor) can act as an open-ended line that leaks at an extraordinarily high rate through the valve seat. The leak rate is dependent upon whether the compressor is pressurized (in operation or idle, pressurized) or depressurized (idle, depressurized).
2) Comp. PRV	The pressure relief valve (PRV) is usually installed on a compressor discharge line, and leaks at a higher than average rate due to vibration.
3) Comp. Starter OEL	Most compressors have a gas starter motor that turns the compressor shaft to start the engine. Some use natural gas as the motive force to spin the starter's turbine blades, and vent the discharge gas to the atmosphere. The inlet valve to the starter can leak and is therefore an OEL unique to compressors.
4) Comp. Seal	All compressors have a mechanical or fluid seal to minimize the flow of pressurized natural gas that leaks from the location where the shaft penetrates the compression chamber. These seals are vented to the atmosphere. Reciprocating compressors have sliding shaft seals while centrifugal compressors have rotating shaft seals.
5) Miscellaneous	There are many components on each compressor, such as valve covers on reciprocating compressor cylinders and fuel valves.

Each compressor has one B/D OEL, one PRV, and one starter OEL. Reciprocating compressors have one compressor seal per compression cylinder (which averaged 2.5 per engine), while centrifugal compressors have 1.5 seals per gas turbine. For the miscellaneous component category, there are many components per compressor engine, but the emission rates were minor and so were added into one lump emission factor per compressor for miscellaneous components.

All of the compressor emission factors take several correction factors into account. First, the various phases of compressor operations [such as the amount of time that compressors are a) idle and depressured, b) idle and pressured up, or c) running]. This is actually a complex adjustment that takes into account valve position practices. [See Methane Emissions from the Natural Gas Industry, Volume 8: Equipment Leaks (1) for details.] Correction factors were also added for fraction of starter gas turbines using air instead of gas (75% for recip, 33% for turbines in gas processing), and for sites with flares handling PRV or compressor B/D discharge (approximately 11% of the compressor blowdown OELs were routed to a plant flare).

EF DATA SOURCES:

1. Component emission factors based on screening results from API/GRI/Star program for the component EF's for eight gas processing plants and EPA's current default zero factors, correlation equations, and pegged source factors. Confidence limits derived from analysis of screening data by Radian in April 1995.
2. OEL (site B/D) emission factor based on results from GRI/Indaco program for compressor stations (June 1994).
3. Plant component counts were based on average of 8 API/Star sites, 6 EPA/Radian sites in 1982, and 7 sites visited under this project in 1992.
4. Compressor emission factors based on results from GRI/Indaco program for 15 compressor stations (June 1994). Compressor operating hours (% running) based on data from 3 gas processing company databases.

Average Facility Emissions for Gas Processing

Equipment Type	Component Type	Component Emission Factor, Mscf/component-yr	Average Component Count	Average Equipment Emissions,[a] MMscf/yr
Gas Plant (non-compressor related components)	Valve	1.305	1,392	2.89 (48%)
	Connection	0.117	4,392	
	Open-Ended Line	0.346	134	
	Pressure Relief Valve	0.859	29	
	Site Blowdown Open-Ended Line	230	2	
Reciprocating Compressor	Compressor Blowdown Open-Ended Line	2,036[b,c]	1	4.09 (74%)
	Pressure Relief Valve	349[b,c]	1	
	Miscellaneous	189[c]	1	
	Starter Open-Ended Line	1,341	0.25[e]	
	Compressor Seal	450[c]	2.5	
Centrifugal Compressor	Compressor Blowdown Open-Ended Line	6,447[b,d]	1	7.75 (39%)
	Miscellaneous	31[d]	1	
	Starter Open-Ended Line	1,341	0.667[f]	
	Compressor Seal	228[d]	1.5	

[a] Values in parentheses represent 90% confidence interval.
[b] Adjusted for 11.1% of compressors which have sources routed to flare.
[c] Adjusted for 89.7% of time reciprocating compressors in processing are pressurized.
[d] Adjusted for 43.6% of time centrifugal compressors in processing are pressurized.
[e] Only 25% of starters for reciprocating compressors in processing use natural gas.
[f] Only 66.7% of starters for centrifugal compressors in processing use natural gas.

EF ACCURACY:

a. Plant Emission Factor = ± 48%
b. Recip. Compressor = ± 74%
c. Turbine Compressor = ± 39%

Basis:

1. The accuracy was propagated through the EF calculation from each terms accuracy. 90% confidence intervals were calculated for the sites using the t-statistic method. The 90% confidence intervals accounted for variability in component count from the range in site averages and estimates were also provided for the component emission factors from the API/Star and GRI/Indaco program.

ACTIVITY FACTOR

a. Plant Activity Factor = 726 plants
b. Compressor Activity Factor = 4092 recip engines, 726 turbines

The number of gas processing plants was determined from the *Oil and Gas Journal* (2) (July 1993). The number and type of gas processing compressor engines were determined from eleven gas plant site visits. The average ratio of compressors per plant was multiplied by the total number of plants, 726, to obtain these estimates. [See Methane Emissions from the Natural Gas Industry, Volume 5: Activity Factors (3) for details.]

AF DATA SOURCES: *Oil and Gas Journal* (July 1993) (2)

AF ACCURACY:

a. Plant Activity Factor: ± 2%
b. Compressor Activity Factor: Recip engines = ± 48%; Turbines = ± 77%

Basis:

1. An accurate count of gas plants by the *Oil and Gas Journal* (2) is very likely since counting such large, discreet facilities should be straightforward. The ± 2% was assigned by engineering judgement.
2. The compressor count accuracy was determined by statistical analysis of the "compressor per site" averages for 11 gas plant sites.
3. A check was performed to estimate whether gas plant sites visited for compressor counts were representative of industry average. Based on *Oil and Gas Journal*, the average plant capacity was 88.3 MMscfd and throughput was 51.2 MMscf/d. Site visit data averaged 271 MMscfd and throughput was 182 MMscf/d, suggesting that plants visited were larger than average. However, further investigation revealed that there is no correlation between plant capacity/throughput and number of compressors (The plant visited with the most compressors had 20 engines with 20,000 HP and a low throughput of 56 MMscfd, while the plant with the highest current operating rate of 750 MMscfd had only one compressor at 17,500 HP.)

ANNUAL EMISSIONS: (24.45 Bscf/yr ± 16.7 Bscf/yr)

The annual emissions were determined by multiplying the average equipment/facility emissions by the population of equipment in the segment.

Category	Emission Factor	Activity Factor	Emission Rate	Uncertainty
Gas processing plants	2.89 MMscf/yr methane	726 plants	2.1 Bscf/yr methane	48%
Recip Comp	4.09 MMscf/yr methane	4092 recip	16.7 Bscf/yr methane	95%
Turbine Comp	7.75 MMscf/yr methane	726 turbine	5.6 Bscf/yr methane	91%
TOTAL			24.4 Bscf/yr methane	68%

REFERENCES

1. Hummel, K.E., L.M. Campbell, and M.R. Harrison. *Methane Emissions from the Natural Gas Industry, Volume 8: Equipment Leaks*, Final Report, GRI-94/0257.25 and EPA-600/R-96-080h, Gas Research Institute and U.S. Environmental Protection Agency, June 1996.

2. *Oil and Gas Journal*. 1992 Worldwide Gas Processing Survey Database, July 1993.

3. Stapper, B.E.. *Methane Emissions from the Natural Gas Industry, Volume 5: Activity Factors*, Final Report, GRI-94/0257.22 and EPA-600/R-96-080e, Gas Research Institute and U.S. Environmental Protection Agency, June 1996.

T-1
TRANSMISSION SOURCE SHEET

SOURCES:	Compressor Stations
OPERATING MODE:	Normal Operation
EMISSION TYPE:	Steady and Unsteady, Fugitive
ANNUAL EMISSIONS:	50.7 Bscf ± 52%

BACKGROUND:
Equipment leaks are typically low-level, unintentional losses of process fluid (gas or liquid) from the sealed surfaces of above-ground process equipment. Equipment components that tend to leak include valves, flanges and other connectors, pump seals, compressor seals, pressure relief valves, open-ended lines, and sampling connections. These components represent mechanical joints, seals, and rotating surfaces, which in time tend to wear and develop leaks.

EMISSION FACTOR:
a. Station = 3.2 MMscf/yr methane per plant
b. Recip. Compressor = 5.55 MMscf/yr methane per recip
c. Turbine Compressor = 11.1 MMscf/yr methane per turbine

The average fugitive emission rate for transmission compressor stations was determined to be composed of two parts: a) station components (excluding compressor-related components); and b) compressor-related components. Fugitives from the compressor-related components have much higher emission factors than components in the rest of the facility. This is due in part to the high vibration that compressors generate, but most of the larger emissions are due to unique compressor components, as explained below.

a. The contribution from non-compressor components was determined by multiplying the average component count by the component emission factor. The number of components was subdivided into valves, connections/flanges, small open-ended lines, site blowdown (B/D) OELs, control valves, and other components (such as pressure relief valves). (Tubing components were determined to be insignificant.) All of these components are typical fugitive components (as described in the EPA Fugitive Emissions Protocol) with the exception of control valves and site B/D OELs. Control valves emit at a higher rate than manual isolation valves since their packing is stressed more often as they are activated much more frequently. Site B/D OELs are the large diameter emergency station blowdown valves that are designed to depressure the entire site to the atmosphere when the valve is opened.

The component emission factors for station components were based on a GRI/Indaco measurement program conducted at 6 compressor stations. The average facility emissions are then calculated as follows:

$$EF = [(N_{vlv} \times EF_{vlv}) + (N_{C\text{-}vlv} \times EF_{C\text{-}vlv}) + (N_{cn} \times EF_{cn}) + (N_{oel} \times EF_{oel}) + (N_{prv} \times EF_{prv}) + (N_{site\ B/D} \times EF_{site\ B/D})]$$

where:
N_x = average count of components of type x per plant, and
EF_x = average methane emission rate per component of type x.

b. The contribution from compressor-related components was obtained by multiplying the average number of fugitive components per compressor engine by the component emission factors. The component emission factors were based on the GRI/Indaco measurement program conducted at 15 compressor stations. Some compressor components are unique, while others have higher leak rates than identical components elsewhere in the plant due to vibration. Compressors have the following types of components:

1) Comp. B/D OEL — A blowdown (B/D) valve to the atmosphere that can depressure the compressor when idle. The B/D valve or the large unit block valves (depending on the operating status of the compressor) can act as an open-ended line that leaks at an extraordinarily high rate

	through the valve seat. The leak rate is dependent upon whether the compressor is pressurized (in operation or idle, pressurized) or depressurized (idle, depressurized).
2) Comp. PRV	The pressure relief valve (PRV) is usually installed on a compressor discharge line and leaks at a higher than average rate due to vibration.
3) Comp. Starter OEL	Most compressors have a gas starter motor that turns the compressor shaft to start the engine. Some use natural gas as the motive force to spin the starter's turbine blades and vent the discharge gas to the atmosphere. The inlet valve to the starter can leak and is therefore an OEL unique to compressors.
4) Comp. Seal	All compressors have a mechanical or fluid seal to minimize the flow of pressurized natural gas that leaks from the location where the shaft penetrates the compression chamber. These seals are vented to the atmosphere. Reciprocating compressors have sliding shaft seals while centrifugal compressors have rotating shaft seals.
5) Miscellaneous	There are many components on each compressor, such as valve covers on reciprocating compressor cylinders and fuel valves.

Each compressor has one B/D OEL, one PRV, and one starter OEL. Reciprocating compressors have one compressor seal per compression cylinder (which averaged 3.3 per engine), while centrifugal compressors have 1.5 seals per gas turbine. For the miscellaneous component category, there are many components per compressor engine, but the emission rates were minor and so were added into one lump emission factor per compressor for miscellaneous components.

All of the compressor emission factors take several correction factors into account. First, the various phases of compressor operations (such as the amount of time that compressors are a) idle and depressured, b) idle and pressured up, or c) running). This is actually a complex adjustment that takes into account valve position practices. [See *Methane Emissions from the Natural Gas Industry, Volume 8: Equipment Leaks* (1) for more details.] Correction factors were also added for fraction of starter gas turbines using air instead of gas (100% for recip, 0% for turbines in Transmission).

EF DATA SOURCES:

1. Component emission factors based on results from GRI/Indaco program for the component EF's for 6 transmission compressor stations (June 1994). Adjustment of station EF is to account for data obtained from one interstate transmission pipeline company that was found to have higher emissions than average.
2. Plant component counts were based on an average of 8 Indaco sites in 1994 and 9 sites visited under this project in 1993, plus 7 industry sites.
3. Compressor emission factors based on results from GRI/Indaco program for 15 compressor stations (June 1994). Compressor operating hours (% running) based on data from FERC database, GRI TRANSDAT database, and data supplied by one large interstate transmission pipeline company.
4. Fraction of methane (93.4 mol%) based on data from GRI TRANSDAT database.

Average Facility Emissions for Gas Transmission

Equipment Type	Component Type	Component Emission Factor, Mscf/component-yr	Average Component Count	Average Equipment Emissions,[a] MMscf/yr
Compressor Station (non-compressor related components)	Valve	0.867	673	3.01 (102%) (Note: 3.2 MMscf/yr used in national emission estimate)[b]
	Control Valve	8.0	31	
	Connection	0.147	3,068	
	OEL	11.2	51	
	PRV	6.2	14	
	Site B/D OEL	264	4	
Reciprocating Compressor	Compressor B/D OEL	3,683	1	5.55 (65%)
	PRV	372[c]	1	
	Miscellaneous	180[c]	1	
	Compressor Starter OEL	[d]	[d]	
	Compressor Seal	396[c]	3.3	
Centrifugal Compressor	Compressor B/D OEL	9,352	1	11.1 (34%)
	Miscellaneous	18[c]	1	
	Compressor Starter OEL	1,440	1	
	Compressor Seal	165[c]	1.5	

[a] Values in parentheses represent 90% confidence interval.
[b] Adjusted for data received from one company that was not considered representative of national average.
[c] Adjusted for the fraction of time the compressor is pressurized (79.1% and 24.2% for reciprocating and centrifugal compressors, respectively).
[d] Reciprocating compressor starters were assumed to use compressed air or electricity instead of natural gas.

EF ACCURACY:

a. Station = 102%
b. Recip. Compressor = 65%
c. Turbine Compressor = 34%

Basis:
Rigorous propagation of error from the spread of thousands of individual measurements taken by Indaco.

ACTIVITY FACTOR:

a. Station Activity Factor = 1700 stations
b. Compressor Activity Factor = 6799 recip engines, 681 turbines

AF DATA SOURCES:

1. 1992 FERC Form 2 responses accounted for 70% of national transmission pipeline mileage. Total station count extrapolated using national total transmission mileage of 276,900 miles from A.G.A. *Gas Facts* (2).
2. Compressor engine count based on GRI TRANSDAT "industry database" with adjustments for total industry horsepower. Transmission compressor station counts were split from storage based upon storage station site visit data and *Gas Facts* (2) data on storage stations. Added 0.2% to recip count account for electric motor drivers.

AF ACCURACY:

a. Station Activity Factor: ± 10%
b. Compressor Activity Factor: Recip engines = ± 17 %; Turbines = ± 26 %

Basis:

1. FERC Form 2 data have a high percentage (70%) of all transmission companies. Therefore a national extrapolation should not add much error. This 10% figure was assigned based on engineering judgement.
2. The compressor count accuracy was assigned based upon the propagation from: a) rigorous error propagation for the 8 storage station "compressor/station" averages; and b) engineering judgement assignment of ± 10% error to the large GRI TRANSDAT database.

ANNUAL EMISSIONS: (50.73 Bscf/yr ± 26.3 Bscf/yr)
The annual emissions were determined by multiplying the average facility/equipment emissions by the population of equipment in the segment.

Category	Emission Factor	Activity Factor	Emission Rate	Uncertainty
Station	3.2 MMscf/yr CH4	1700 stations	5.4 Bscf/yr CH4	103%
Recip Comp	5.55 MMscf/yr CH4	6799 recip	37.8 Bscf/yr CH4	68%
Turbine Comp	11.1 MMscf/yr CH4	681 turbine	7.5 Bscf/yr CH4	44%
TOTAL			50.7 Bscf/yr CH4	52%

REFERENCES

1. Hummel, K.E., L.M. Campbell, and M.R. Harrison. *Methane Emissions from the Natural Gas Industry, Volume 8: Equipment Leaks,* Final Report, GRI-94/0257.25 and EPA-600/R-96-080h, Gas Research Institute and U.S. Environmental Protection Agency, June 1996.

2. American Gas Association, *Gas Facts*. Arlington, VA, 1992.

p

S-1
STORAGE SOURCE SHEET

SOURCES:	Storage Facilities (Compressor Stations and Wells)
OPERATING MODE:	Normal Operation
EMISSION TYPE:	Steady and Unsteady, Fugitive
ANNUAL EMISSIONS:	16.76 Bscf ± 57%

BACKGROUND:
Equipment leaks are typically low-level, unintentional losses of process fluid (gas or liquid) from the sealed surfaces of above-ground process equipment. Equipment components that tend to leak include valves, flanges and other connectors, pump seals, compressor seals, pressure relief valves, open-ended lines, and sampling connections. These components represent mechanical joints, seals, and rotating surfaces, which in time tend to wear and develop leaks.

EMISSION FACTOR:
a. Station = 7.85 MMscf/yr methane per station
b. Wellhead = 41.8 Mscf/yr methane per wellhead
c. Recip. Compressor = 7.71 MMscf/yr methane per recip
d. Turbine Compressor = 11.16 MMscf/yr methane per turbine

The average fugitive emission rate for storage facilities was determined to be composed of three parts: a) storage compressor station components (excluding compressor-related components), b) injection/withdrawal wellhead components, and c) compressor-related components. Fugitives from the compressor-related components have much higher emission factors than components in the rest of the facility. This is due in part to the high vibration that compressors generate, but most of the larger emissions are due to unique compressor components as explained below.

a) The contribution from non-compressor components was determined by multiplying the average number of fugitive components by the component emission factor. The number of components was subdivided into valves, connections/flanges, small open-ended lines, and other components (such as pressure relief valves); tubing components were determined to be insignificant. All of these components are typical fugitive components (as described in the EPA Fugitive Emissions Protocol) with the exception of site blowdown (B/D) open-ended lines (OELs). Site B/D OELs are the large diameter emergency station blowdown valves that are designed to depressure the entire site to the atmosphere when the valve is opened. Emission factors for storage station components were based on the GRI/Indaco program at 6 transmission compressor station sites.

b) The contribution from storage injection/withdrawal wells was determined in the same manner as storage compressor stations (see below). Emission factors for storage injection/withdrawal wells were based on the updated API/GRI/Star 20-site study (4 gas production sites). Physical and operational characteristics of injection/withdrawal wells were compared to gas production wells, and were found to be similar but typically larger (more components). This was taken into account in the component count data.

The number of components was subdivided into types, such as valves, connections/flanges, open-ended lines, and other components (such as pressure relief valves). The average facility/equipment emissions are calculated as follows:

$$EF = [(N_{vlv} \times EF_{vlv}) + (N_{cn} \times EF_{cn}) + (N_{oel} \times EF_{oel}) + (N_{oth} \times EF_{oth}) + (N_{prv} \times EF_{prv}) + (N_{site\ B/D} \times EF_{site\ B/D})]$$

where:

N_x = average count of components of type x per plant, and
EF_x = average methane emission rate per component of type x.

c) The contribution from compressor-related components was obtained by multiplying the average number of fugitive components per compressor engine by the component emission factors. The component emission factors were based on the GRI/Indaco measurement program conducted at 15 compressor stations. Some compressor components are unique, while others have higher leak rates than identical components elsewhere in the plant due to vibration. Compressors have the following types of components:

1) Comp. B/D OEL	A blowdown (B/D) valve to the atmosphere that can depressure the compressor when idle. The B/D valve or the large unit block valves (depending on the operating status of the compressor) can act as an open-ended line that leaks at an extraordinarily high rate through the valve seat. The leak rate is dependent upon whether the compressor is pressurized (in operation or idle, pressurized) or depressurized (idle, depressurized).
2) Comp. PRV	The pressure relief valve (PRV) is usually installed on a compressor discharge line and leaks at a higher than average rate due to vibration.
3) Comp. Starter OEL	Most compressors have a gas starter motor that turns the compressor shaft to start the engine. Some use natural gas as the motive force to spin the starter's turbine blades and vent the discharge gas to the atmosphere. The inlet valve to the starter can leak and is therefore an OEL unique to compressors.
4) Comp. Seal	All compressors have a mechanical or fluid seal to minimize the flow of pressurized natural gas that leaks from the location where the shaft penetrates the compression chamber. These seals are vented to the atmosphere. Reciprocating compressors have sliding shaft seals while centrifugal compressors have rotating shaft seals.
5) Miscellaneous	There are many components on each compressor, such as valve covers on reciprocating compressor cylinders and fuel valves.

Each compressor has one B/D OEL, one PRV, and one starter OEL. Reciprocating compressors have one compressor seal per compression cylinder (which averaged 4.5 per engine), while centrifugal compressors have 1.5 seals per gas turbine. For the miscellaneous component category, there are many components per compressor engine, but the emission rates were minor and so were added into one lump emission factor per compressor for miscellaneous components.

All of the compressor emission factors take several correction factors into account. First, the various phases of compressor operations (such as the amount of time that compressors are a) idle and depressured, b) idle and pressured up, or c) running). This is actually a complex adjustment that takes into account valve position practices. [See *Methane Emissions from Natural Gas Industry, Volume 8: Equipment Leaks* (1) for more details.] Correction factors were also added for fraction of starter gas turbines using air instead of gas (40% for recip, 50% for turbines in storage).

EF DATA SOURCES:

1. Emission Factors for storage compressor stations are based upon GRI/Indaco transmission compressor station fugitive leak measurement surveys at 6 compressor stations. Compressor operating hours (% running) based on data from 5 national gas storage companies.
2. Component counts for storage compressor stations and injection/withdrawal wellheads are based on Radian site visits to 5 storage facilities.
3. Component emission factors for compressor-related components based on GRI/Indaco transmission compressor station fugitive leak measurement program at 15 compressor stations.
4. Wellhead emission factors based on simple average of GRI/Star data for gas production wellheads (Atlantic/Eastern region and Rest of U.S.).
5. Fraction of methane (93.4 mol%) based on data from GRI TRANSDAT database.

Average Facility Emissions for Gas Storage

Equipment Type	Component Type	Component Emission Factor, Mscf/component-yr	Average Component Count	Average Equipment Emissions,[a] MMscf/yr
Storage Facility (non-compressor related components)	Valve	0.867	1,868	7.85 (100%)
	Connection	0.147	5,571	
	OEL	11.2	353	
	PRV	6.2	66	
	Site B/D OEL	264	4	
Injection/Withdrawal Wellhead	Valve	0.918	39	0.042 (76%)
	Connection	0.125	89	
	OEL	0.237	7	
	PRV	1.464	1	
Reciprocating Compressors	Compressor B/D OEL	5,024[b]	1	7.71 (48%)
	PRV	317[b]	1	
	Miscellaneous	153[b]	1	
	Compressor Starter OEL	1,440	0.6[c]	
	Compressor Seal	300[b]	4.5	
Centrifugal Compressors	Compressor B/D OEL	10,233[b]	1	11.16 (34%)
	Miscellaneous	17[b]	1	
	Compressor Starter OEL	1,440	0.5[c]	
	Compressor Seal	126[b]	1.5	

[a] Values in parentheses represent 90% confidence interval.
[b] Adjusted for the fraction of time the compressor is pressurized (67.5% and 22.4% for reciprocating and centrifugal compressors, respectively).
[c] Adjusted for the fraction of compressor starters using natural gas (60% and 50% for reciprocating and centrifugal compressors, respectively).

EF ACCURACY:

a. Station = ± 100%
b. Wellhead = ± 76%
b. Recip. Compressor = ± 48%
c. Turbine Compressor = ± 34%

Basis:
Rigorously propagation of error from the spread of thousands of individual measurements taken by Indaco and Star.

ACTIVITY FACTOR

a. Station Activity Factor = 475 stations
b. Wellhead Activity Factor = 17999 wellheads
b. Compressor Activity Factor = 1396 recip compressors, 136 turbines

The activity factors for the segment were compiled from published statistics in *Gas Facts* (2). The total count for Underground storage stations was 386, and the total LNG storage count was 89.

AF DATA SOURCES:

1. The number of underground storage facilities was taken directly from A.G.A. *Gas Facts*, (2), Table 4-5: Number of Pools, Wells, Compressor Stations, and Horsepower in Underground Storage Fields. Data from base year 1992 were used.
2. The number of Liquefied Natural Gas Storage Facilities was summed from A.G.A. *Gas Facts* (2), Table 4-3, "Liquefied Natural Gas Storage Operations in the U.S. as of December 31, 1987." The table lists 54 complete plants, 32 satellite plants, and 3 import terminals for a total of 89 facilities.
3. Compressor engine count based on GRI TRANSDAT "industry database" with adjustments for total industry horsepower. Storage site visits to 8 storage sites provided number of reciprocating engines and turbines per site [see Activity Factor Report (3)]. Also, the number of reciprocating compressors in storage was increased by 31% to account for electric motor drivers.

AF ACCURACY:

a. Station Activity Factor: ± 5%
b. Wellhead Activity Factor: ± 5%
b. Compressor Activity Factor: Recip engines = ± 58 %; Turbines = ± 119 %

Basis:

1. A.G.A. *Gas Facts* (2) has a high percentage of all storage facilities represented in Tables 4-5 and 4-3. Therefore a national extrapolation should not add much error. This 5% figure was assigned based on engineering judgement.
2. The compressor count accuracy was assigned based upon the propagation from: a. Rigorous error propagation for the 8 storage station "compressor/station" averages; and b. Engineering judgement assignment of ± 10% error to the large GRI TRANSDAT database.

p

ANNUAL EMISSIONS: (16.76 Bscf/yr ± 9.6 Bscf/yr)

The annual emissions were determined by multiplying an emission factor for an average equipment type by the population of equipment in the segment.

Category	Emission Factor	Activity Factor	Emission Rate	Uncertainty
Station	7.85 MMscf/yr CH4	475 stations	3.73 Bscf/yr CH4	100%
Inj/With Wellheads	41.8 Mscf/yr CH4	17999 wellheads	0.752 Bscf/yr CH4	76%
Recip Comp	7.71 MMscf/yr CH4	1396 recip	10.76 Bscf/yr CH4	80%
Turbine Comp	11.16 MMscf/yr CH4	136 turbine	1.52 Bscf/yr CH4	129%
TOTAL			16.76 Bscf/yr CH4	57%

REFERENCES

1. Hummel, K.E., L.M. Campbell, and M.R. Harrison. *Methane Emissions from the Natural Gas Industry, Volume 8: Equipment Leaks*, Final Report, GRI-94/0257.25 and EPA-600/R-96-080h, Gas Research Institute and U.S. Environmental Protection Agency, June 1996.

2. American Gas Association. *Gas Facts*, Arlington, VA. 1992.

3. Stapper, B.E. *Methane Emissions from the Natural Gas Industry, Volume 5: Activity Factors*, Final Report, GRI-94/0257.22 and EPA-600/R-96-080e, Gas Research Institute and U.S. Environmental Protection Agency, June 1996.

p

D-5
DISTRIBUTION SEGMENT SOURCE SHEET

SOURCES: Customer Meters
OPERATING MODE: Normal Operations
EMISSION TYPE: Steady, Fugitive
ANNUAL EMISSIONS: 5.8 ± 1.1 bscfy

BACKGROUND:
Losses from customer meters are caused by fugitive leakage from the connections and other fittings surrounding the meter set.

EMISSION FACTOR: (outdoor residential meters: 138.5 ± 23.1 scf/meter-yr
commercial/industrial meters: 47.9 ± 16.7 scf/meter-yr)
The estimate of leakage from customer meters is based on screening and bagging studies conducted at ten sites throughout the United States. The initial study was conducted by Indaco to measure customer meters in the west coast [Indaco Air Quality Services, Inc., *Methane Emissions from Natural Gas Customer Meters: Screening and Enclosure Studies*, draft report, August 15, 1992 (1)]. Data were also collected at nine additional sites across the United States, including three east coast sites, a mid-western site, a rocky mountain site, and five western U.S. sites. A summary of the average emissions from residential customer meters from each of the ten sites is shown in the following table:

Site	Number of Meters Screened	Number of Meters Leaking	Average Leak Rate [a] (lb methane/day)	Standard Deviation[a] (lb methane/day)
Site 1 -- West Coast	134	37	0.0098	0.0239
Site 2 -- East Coast	40	29	0.0002	0.0004
Site 3 -- East Coast	158	37	0.0789	0.1753
Site 4 -- Mid-West	156	8	0.0057	0.0061
Site 5 -- Rocky Mountain	188	28	0.0035	0.0082
Site 6 -- West Coast	194	5	0.0002	0.0001
Site 7 -- South East	201	56	0.0146	0.0328
Site 8 -- North West	101	31	0.0101	0.0199
Site 9 -- South West	150	50	0.0222	0.0404
Site 10 -- North West	150	40	0.0125	0.0230

[a]Average value for all meters (i.e., leaking and non-leaking) screened at the site.

The average emission factor for residential customer meters was derived by averaging the emission rates for the ten sites. The emission factor was converted to units of scf/meter-yr by assuming that the losses from the leaking meters were continuous throughout the year.

The precision represents the 90 % confidence interval and was calculated by averaging the standard deviations for the ten sites.

The emission factor for commercial/industrial customer meters was derived from screening data collected at a total of four sites. A summary of the average emissions from each of the four sites is shown in the following table:

Site	Number of Meters Screened	Number of Leaking Meters	Average Leak Rate[a] (lb methane/day)	Standard Deviation[a] (lb methane/day)
Site 3 -- East Coast	45	12	0.0112	0.0251
Site 4 -- Mid-West	61	0	--	--
Site 5 -- Rocky Mountain	21	6	0.0088	0.0076
Site 6 -- West Coast	22	1	0.0018	--

[a]Average value for all meters (i.e., leaking and non-leaking) screened at the site.

The average emission factor for commercial/industrial customer meters was derived by averaging the emission rates for the four sites. The emission factor was converted to units of scf/meter-yr by assuming that the losses from the leaking meters was continuous throughout the year.

ACTIVITY FACTOR: (outdoor residential meters: 40,049,306 ± 4,200,135
commercial/industrial meters: 4,608,000 ± 230,400)

The total number of customer meters in the U.S. gas industry, 56,132,300, and the number of residential customer meters, 51,524,600, were based on *Gas Facts*, American Gas Association, 1992 (2). The number of residential customer meters located indoors versus outdoors was estimated based on a regional breakdown of total customers presented in *Gas Facts* (2) combined with data obtained from 22 individual gas companies within different regions of the country. (Note: The number of customers in each region was used to estimate the number of indoor meters because data on number of customer meters segregated by region were not available.)
Following is the average percentage of customer meters located indoors in each region:

Region	Total Residential Customers	Average Percent Indoor Meters	Sample Size	Estimated Indoor Meters	Precision
New England	1,886,500	52	1	980,980	471,625[a]
Middle Atlantic	8,403,400	61	7	5,126,074	1,905,371
East North Central	11,633,500	17	7	1,977,695	1,461,663
West North Central	4,684,100	40	1	1,873,640	1,873,640[a]
South Atlantic	4,987,700	21	4	1,030,680[b]	1,030,680[a]
East South Central	2,465,200	0	--	0	123,260[c]
West South Central	5,666,600	0	--	0	283,330[c]
Mountain	3,318,700	0	--	0	331,870[c]
Pacific	9,724,500	5	2	486,225	486,225[a]
TOTAL	52,770,200		22	11,475,294	3,317,254

[a]Estimated based on engineering judgement.
[b]Estimated for each state separately in region.
[c]Estimated based on industry comments suggesting that customer meters in southern regions are essentially all located outdoors.

The estimated number of indoor meters, 11,475,294, was subtracted from the total number of reported meters, 51,524,600, to derive an estimated 40,049,306 outdoor residential customer meters in the United States. The precision was estimated from the data provided by the companies, engineering judgement for some regions, and an estimated 5% error in the nationally reported number of residential customer meters.

The leakage rates from customer meters located indoors was assumed to be negligible based on the increased probability that leaks on indoor meter sets are detected and repaired promptly. This assumption of negligible leakage from indoor meters is consistent with the findings from pressure regulating stations located in vaults.

The precision of the total estimated commercial/industrial customer meters is assumed to be ± 5% of the estimated 4,608,000 meters.

ANNUAL EMISSIONS: **(5.8 ± 1.1 Bscf/yr)**

REFERENCES

1. Indaco Air Quality Services, Inc. *Methane Emissions from Natural Gas Customer Meters: Screening and Enclosure Studies*. Draft Report, August 15, 1992.
2. American Gas Association. *Gas Facts*. Arlington, VA. 1992.

APPENDIX C

Conversion Table

Unit Conversion Table

English to Metric Conversions

1 scf methane	=	19.23 g methane
1 Bscf methane	=	0.01923 Tg methane
1 Bscf methane	=	19,230 metric tonnes methane
1 Bscf	=	28.32 million standard cubic meters
1 short ton (ton)	=	907.2 kg
1 lb	=	0.4536 kg
1 ft^3	=	0.02832 m^3
1 ft^3	=	28.32 liters
1 gallon	=	3.785 liters
1 barrel (bbl)	=	158.97 liters
1 inch	=	2.540 cm
1 ft	=	0.3048 m
1 mile	=	1.609 km
1 hp	=	0.7457 kW
1 hp-hr	=	0.7457 kW-hr
1 Btu	=	1055 joules
1 MMBtu	=	293 kW-hr
1 lb/MMBtu	=	430 g/GJ
T (°F)	=	1.8 T (°C) + 32
1 psi	=	51.71 mm Hg

Global Warming Conversions

Calculating carbon equivalents of any gas:

$$\text{MMTCE} = (\text{MMT of gas}) \times \left(\frac{\text{MW, carbon}}{\text{MW, gas}}\right) \times (\text{GWP})$$

Calculating CO_2 equivalents for methane:

$$\text{MMT of } CO_2 \text{ equiv.} = (\text{MMT } CH_4) \times \left(\frac{\text{MW, } CO_2}{\text{MW, } CH_4} \right) \times (\text{GWP})$$

where MW (molecular weight) of CO_2 = 44, MW carbon = 12, and MW CH_4 = 16.

Notes

scf	=	Standard cubic feet. Standard conditions are at 14.73 psia and 60°F.
Bscf	=	Billion standard cubic feet (10^9 scf).
MMscf	=	Million standard cubic feet.
Mscf	=	Thousand standard cubic feet.
Tg	=	Teragram (10^{12} g).
Giga (G)	=	Same as billion (10^9).
Metric tonnes	=	1000 kg.
psig	=	Gauge pressure.
psia	=	Absolute pressure (note psia = psig + atmospheric pressure).
GWP	=	Global Warming Potential of a particular greenhouse gas for a given time period.
MMT	=	Million metric tonnes of a gas.
MMTCE	=	Million metric tonnes, carbon equivalent.
MMT of CO_2 eq.	=	Million metric tonnes, carbon dioxide equivalent.

NTIS does not permit return of items for credit or refund. A replacement will be provided if an error is made in filling your order, if the item was received in damaged condition, or if the item is defective.

Reproduced by NTIS

National Technical Information Service
Springfield, VA 22161

This report was printed specifically for your order from nearly 3 million titles available in our collection.

For economy and efficiency, NTIS does not maintain stock of its vast collection of technical reports. Rather, most documents are printed for each order. Documents that are not in electronic format are reproduced from master archival copies and are the best possible reproductions available. If you have any questions concerning this document or any order you have placed with NTIS, please call our Customer Service Department at (703) 487-4660.

About NTIS

NTIS collects scientific, technical, engineering, and business related information — then organizes, maintains, and disseminates that information in a variety of formats — from microfiche to online services. The NTIS collection of nearly 3 million titles includes reports describing research conducted or sponsored by federal agencies and their contractors; statistical and business information; U.S. military publications; audiovisual products; computer software and electronic databases developed by federal agencies; training tools; and technical reports prepared by research organizations worldwide. Approximately 100,000 *new* titles are added and indexed into the NTIS collection annually.

For more information about NTIS products and services, call NTIS at (703) 487-4650 and request the free *NTIS Catalog of Products and Services*, PR-827LPG, or visit the NTIS Web site **http://www.ntis.gov**.

NTIS
Your indispensable resource for government-sponsored information—U.S. and worldwide