United States
Environmental Protection
Agency

Office of Air Quality
Planning and Standards
Research Triangle Park, NC 27711

EPA-453/R-99-011
October 1999
www.epa.gov/ttn/uatw/

EPA

Plain Language Guide to the Primary Aluminum NESHAP -- 40 CFR Part 63, Subpart LL

Plain Language Guide to the Primary Aluminum NESHAP 40 CFR Part 63, Subpart LL

Prepared for:

Emission Standards Division (ESD)
Policy, Planning, and Standards Group (PPSG)
and
Information Transfer and Program Integration Division (ITPID)
Program Review Group (PRG)
Office of Air Quality Planning and Standards
U. S. Environmental Protection Agency
Research Triangle Park, NC 27711

October 1999

What is the legal status of this guide?

The Office of Air Quality Planning and Standards (OAQPS) of the U. S. Environmental Protection Agency (EPA) has reviewed this document and approved it for publication.

When using this document, remember that it isn't legally binding and doesn't replace the final rule - "National Emission Standard for Hazardous Air Pollutants for Primary Aluminum Reduction Plants" (published in the *Federal Register,* **10/7/97, 62 FR 52407**) or any State, local or tribal rules that may apply to your facility.

This document isn't intended, nor can you rely on it, to create any rights enforceable by any party in litigation with the United States. The EPA may change this document at any time without public notice.

This document includes only requirements from the final rule published in the *Federal Register* 10/7/97, 63 FR 52407.

Thank You

This document was prepared by a joint partnership among the Environmental Protection Agency (EPA, or we), State and local agencies for air pollution control, trade associations, and organizations who produce primary aluminum. At the time of publication, the development team (including reviewers) had the following members:

Marsha Branscome, Research Triangle Institute
Laura Coleman, Reynolds Metals
Steve Fruh, EPA, OAQPS, ESD
Mike Palazzolo, ALCOA
Robert Strieter, The Aluminum Association
Ingrid Ward, EPA, OAQPS, ITPID
Member Companies of The Aluminum Association

We thank those people for their participation. Their technical insights, experiences, and suggestions were essential to this guide's development.

TABLE OF CONTENTS

CHAPTER 1 - Introduction

Why should I use this document? 1

Is there anything I should know before using this document? 1

How do I get copies of this document? 1

We want your feedback 2

CHAPTER 2 - What this rule covers - An Overview

Why was this rule written? 4

How do I know if I'm subject to this rule? 4

Are any processes exempt? 4

How do I know if I have an affected source? 4

What are my requirements for affected sources? 5

When do I need to comply? 5

What pollutants am I emitting? 5

CHAPTER 3 - Complying with requirements for potlines

What do the potline sections of the rule cover? 9

What is exempt under these sections of the rule? 9

Do I have any compliance options? 9

What emission limits must I meet? 10

What monitoring must I do? 12

What records must I keep? 12

What plans and reports must I prepare? 13

How do I show compliance? 13

TABLE OF CONTENTS

CHAPTER 4 - Complying with requirements for anode bake furnaces

What is covered under these sections of the rule? 25

What is exempt under these sections of the rule? 25

Do I have any compliance options? 25

What emission limits must I meet? 25

What monitoring must I do? 26

What records must I keep? 27

What plans and reports must I prepare? 27

How do I show compliance? 27

CHAPTER 5 - Complying with requirements for paste production plants

What is covered under this section? 33

What is exempt under this section? 33

What are the requirements for paste production plants? 33

Do I have any compliance options? 34

What monitoring must I do? 34

What records must I keep? 35

What plans and reports must I prepare? 35

How do I show compliance? 35

CHAPTER 6 - Complying with requirements for new pitch storage tanks

What is covered under this section? 39

What is exempt under this section? 39

What are the requirements? 39

Do I have any compliance options? 39

TABLE OF CONTENTS

What monitoring must I do? 40

What records must I keep? 40

What plans and reports must I prepare? 40

How do I show compliance? 41

CHAPTER 7 - Calculations, test methods, and procedures

What test methods do I use for TF and POM? 45

How do I get approval to use an alternative test method? 46

What are my requirements for conducting a performance test? 46

How do I sample if I have many stacks for a single control device or several control devices for a single process? 46

What alternatives are there for performance testing? 46

How do I calculate my emissions when I am using emission averaging? 47

How do I calculate my emission limits if I incorporate the NSPS into my subpart LL requirements? 47

How do I calculate my TF emissions if I incorporate the NSPS into my subpart LL requirements? 48

What procedures do I use for new pitch storage tanks? 49

CHAPTER 8 - Plans, notifications, reports, and requests for alternatives

What is a site-specific test plan? 57

What is a continuous parameter monitoring plan? 60

What is an implementation plan for emissions averaging? 60

What is an engineering plan? 61

What is a startup, shutdown and malfunction plan? 61

What do I have to report and when? 62

TABLE OF CONTENTS

What alternatives are available and how do I request one? 62

Can I change the date my reports are due? 63

Where do I send my reports? 64

Is there a time limit for the regulatory authority to approve or deny my requests? 64

Are example reporting forms available? 65

CHAPTER 9 - Other requirements and information

Who administers this regulation? 88

Are plants in Indian Country regulated by the State? 88

Do I need a title V permit? 88

How do I change my permit to include this rule? 89

What portions of the General Provisions apply? 89

CHAPTER 10- Getting additional help

Whom can I ask for help? 90

Can I get more information on the Web? 91

CHAPTER 11- Supplemental information for State or local agencies and Tribes

How many plants may need to meet the emission limits? 93

How much HAP emissions will the rule reduce? 93

TABLE OF CONTENTS

LIST OF FIGURES

Figure 2.1 Subpart LL, Does it Apply to Me? 6

Figure 2.2 Compliance Timeline 8

Figure 8.1 Potline Roof Monitor Sampling Options 59

Figure 11.1 There are 23 Primary Aluminum Plants in 14 States 95

Figure B.1 Process Flow Diagram for a Soderberg Plant 103

Figure B.2 Process Flow Diagram for a Prebake Plant 104

Figure B.3 Schematic of a Soderberg Paste Plant 105

Figure B.4 Schematic of Prebake Anode Preparation 105

Figure B.5 Ring Furnace Layout 107

Figure B.6 Schematic of Types of Reduction Cells 109

LIST OF TABLES

Table 2.1 Quick Reference Compliance Guide 7

Table 3.1 What Emission Limits Must Existing Prebake Potlines Meet? 14

Table 3.2 What Emission Limits Must Existing Soderberg Potlines Meet? 15

Table 3.3 Monitoring Requirements for Potlines 16

Table 3.4 Recordkeeping Requirements for Potlines 21

Table 3.5 Notifications and Reports for Potlines 24

Table 4.1 What Emission Limits Must Existing Anode Bake Furnaces Meet? 28

Table 4.2 Monitoring Requirements for Anode Bake Furnaces 29

Table 4.3 Recordkeeping Requirements for Anode Bake Furnaces 31

Table 4.4 Notifications and Reports for Anode Bake Furnaces 32

Table 5.1 Monitoring Requirements for Paste Production Plants 36

TABLE OF CONTENTS

Table 5.2 Recordkeeping Requirements for Paste Production Plants 37

Table 5.3 Notifications and Reports for Paste Production Plants 38

Table 6.1 Monitoring Requirements for New Pitch Storage Tanks 42

Table 6.2 Recordkeeping Requirements for New Pitch Storage Tanks 43

Table 6.3 Notifications and Reports for New Pitch Storage Tanks 44

Table 7.1 Methods for Sampling for TF and POM 45

Table 7.2 Performance Test Requirements for Potlines 50

Table 7.3 Performance Test Requirements for Anode Bake Furnaces 53

Table 7.4 How Do I Qualify for a Monitoring Alternative? 54

Table 8.1 Due Dates for Notifications and Reports 66

Table 8.2 Reporting Requirements 69

Table 10.1 EPA Regional Air Division Offices 92

Table 11.1 Primary Aluminum Reduction Plants in the U.S. 94

Appendices

A - Subpart LL, Final Rule. 96

(Includes an index for the rule cross referenced to the *Federal Register* notice by page and column number as well as rule section numbering)

B- Description of the Process and Emission Points. 101

C- Site-Specific Test Plan Outline. 111

List of Acronyms and Abbreviations

ACGIH	American Conference of Governmental Industrial Hygienists
ALAPCO	Association of Local Air Pollution Control Officials
CAA	Clean Air Act (of 1990)
CFR	Code of Federal Regulations
CEM	Continuous Emission Monitor
CWPB	Center Worked Prebake
EPA	Environmental Protection Agency
ESD	Emission Standards Division (of OAQPS)
FR	Federal Register
HAP	Hazardous Air Pollutant
HF	Hydrogen Fluoride or Hydrofluoric Acid
HSS	Horizontal Stud Soderberg
ITPID	Information Transfer & Program Integration Division (of OAQPS)
kg	kilograms
lb	pounds
MACT	Maximum Achievable Control Technology
NESHAP	National Emission Standards for Hazardous Air Pollutants
NTIS	National Technical Information Services
OAQPS	Office of Air Quality Planning and Standards
OECA	Office of Enforcement and Compliance Assurance
OSHA	Occupational Safety and Health Administration
POM	Polycyclic Organic Matter
PTE	Potential to Emit
SSMP	Startup, Shutdown and Malfunction Plan
STAPPA	State and Territorial Air Pollution Program Administrators
SWPB	Side Worked Prebake
TF	Total Fluoride
TTN	Technology Transfer Network
UATW	Unified Air Toxics Website
VSS	Vertical Stud Soderberg
WWW	World Wide Web

Chapter 1 - Introduction

Why should I use this document?

This document can help you understand the requirements for the ***Primary Aluminum NESHAP*** (also known as subpart LL) by helping you determine:

- if the subpart applies to your facility and process;
- what compliance options are available;
- what recordkeeping, reporting and monitoring requirements you must follow; and
- the date you must come into compliance with the subpart and other important deadlines.

Is there anything I should know before using this document?

When using this document, remember that it **doesn't** replace the final rule and covers only requirements published on or before **10/7/97**. You should keep up with new requirements printed after this date by periodically checking the *Federal Register* and the Code of Federal Regulations (CFR). You can download Federal Register notices by going to the Government Printing Office (GPO) website at *www.access.gpo.gov/su_docs/aces/aces140.html*.

Keep informed of rule changes by checking the Federal Register

We've included a copy of the final rule in **Appendix A** (as published in the *Federal Register*, **10/7/97, 62 FR 52384**), so you can reference the rule while you're using this document.

How do I get copies of this document?

You can get copies of this document in **four** ways:

- EPA's Unified Air Toxics Website (*www.epa.gov/ttn/uatw*). Look under Rules and Implementation, Primary Aluminum
- Library Services Office, (MD-35), U.S. EPA, Research Triangle Park, NC 27711, or *www.epa.gov/natlibra/ols.html* (limited supply)
- National Technical Information Services (NTIS), 5285 Port Royal Road, Springfield, VA 22161, or 1-(800)- 553-6847, or *www.fedworld.gov/ntis/ntishome.html* (NTIS will charge you a fee for this document)
- National Center for Environmental Publications and Information, 1-(800)-490-9198 or *www.epa.gov/ncepihom/index.html*

We want your feedback

To serve you better, we've included a survey on the usefulness of this document. If you'd like to participate, please fill out the survey on page 3 and return it to the address indicated. We'll keep your responses confidential if you desire, but use them to help us improve future documents.

Help us publish better documents by filling out our survey

Survey on the Plain Language Guide to the Primary Aluminum NESHAP

Please help us gauge the usefulness of this document by completing this short form. Your response will be kept confidential. Your judgment of the document's utility will help EPA to decide how to improve it.

1. What type of business do you work for? (check one of the following)

   Manufacturing ☐ Contractor ☐ Tribe ☐

   Government (specify Federal, State, local) _____ Other _____

2. What are your job responsibilities? (check any of the following that apply)

   Plant Operator ☐ Maintenance ☐ Plant Manager ☐

   Environmental Staff ☐ Other: _____

3. How did you hear about this guidance? (check one of the following)

   Co-worker ☐ EPA TTN via dial up modem ☐ EPA TTN via the Web ☐

   Other _____

Please indicate your agreement with the following statements from 1= Strongly Agree to 5 = Strongly Disagree

Statement	1	2	3	4	5	N/A
The guidance was timely.						
The document provides a good overview of the rule.						
This document provides the type information that my organization needs to comply.						
The guidance helped us achieve compliance more quickly than if we had developed our own.						
Portions of this document have been incorporated into internal policy documents.						
The format of this document was well organized and easy to understand.						

4. What did you **like** about this document or what helped you the most? (be as specific as you can) _____

_____

_____

5. What did you **not like** about this document or what helped you the least? (be as specific as you can) _____

_____

_____

6. What would you **change** about this document (e.g. formats, excluding information or including things that you did not find in the document)? _____

_____

_____

7. Did you find the overall usage of this document to be:

extremely useful ☐ very useful ☐ so-so useful ☐ not useful at all ☐

8. Other comments: _____

Provide additional comments on the back of this form or on a separate paper.

Return survey to : ATTN: Primary Aluminum Implementation Contact, U.S. Environmental Protection Agency (EPA), Research Triangle Park (RTP) MD-12, Research Triangle Park, NC 27711, **or** fax (919) 541-2664

Why was this rule written?

We wrote this rule to reduce hazardous air pollutants and achieve the environmental benefits intended by the Clean Air Act (CAA) of 1990.

Our research has shown that emissions from a typical production plant may include a number of HAPs. The most significant HAPs from primary aluminum processes are hydrogen fluoride (HF) and polycyclic organic matter (POM).

How do I know if I'm subject to this rule?

You are subject to subpart LL if you:

- **!** Are a major source of HAPs as defined in 40 CFR 63.2; and
- **!** Produce primary aluminum by the electrolytic reduction process.

You can use **Figure 2.1** to help determine if you are subject to this subpart.

Are any processes exempt?

Subpart LL covers all major source plants that manufacture aluminum by electrolytic reduction. No primary aluminum processes are exempt. The rule does not cover reduction cells used solely for research and development purposes or secondary aluminum manufacturing processes. **Appendix B** describes the primary aluminum manufacturing process.

How do I know if I have an affected source?

The rule applies to the following affected sources located at a primary aluminum reduction plant that is a major source: each **new pitch storage tank** and each **new or existing potline, paste production plant, or anode bake furnace**. It does **not** apply to one bake furnace in Louisiana that does not have a primary aluminum production plant (i.e., a potline) onsite. This bake furnace is subject to the State's MACT determination.

Subpart LL also applies to each **new pitch storage tank** (for which construction commenced on or after September 26, 1996). Subpart LL does **not** apply to existing pitch storage tanks, which are those for which construction commenced before September 26, 1996.

See **Appendix B** for a detailed description of each type of affected source.

What are my requirements for affected sources?

All types of potlines must meet an emission limit for total fluoride (TF). Soderberg potlines must meet an emission limit for polycyclic organic matter (POM). Each anode bake furnace must meet limits for both TF and POM. Provisions also are included for emission averaging by existing potlines and anode bake furnaces. New pitch storage tanks must reduce POM emissions by 95 percent, and all paste production plants must be controlled by a dry coke scrubber or approved alternative control device. The rule also contains requirements for certain types of potlines associated with a new, modified, or reconstructed potroom group.

The rule also includes requirements for an initial performance test, periodic source testing, monitoring of emission control device operating parameters, recording of process malfunctions and corrective actions, and regular reporting of compliance status. **Table 2.1** gives a quick reference compliance guide for the major requirements. Details on the specific requirements for each type of affected source are given in sections 3, 4, 5 and 6.

When do I need to comply?

If you are an existing source, you must comply with this subpart by **October 7, 1999,** unless you receive an extension of the compliance date from the regulatory authority. If you have an existing affected source or facility or part of a facility that was shutdown at the time compliance would have otherwise been required, you must provide written notification to your regulatory authority before you begin startup and demonstrate compliance within 180 days. If you demonstrate to the satisfaction of the regulatory authority that you need additional time to install or modify emission control equipment, subpart LL allows you to delay compliance until **October 9, 2000**. In addition, § 63.6(i)(4) of the NESHAP General Provisions in 40 CFR part 63, subpart A allows the regulatory authority to grant an additional year if it is needed to install controls, which would extend the compliance date to **October 8, 2001**. In general, the phrase "for installation of controls" includes add-on control devices such as scrubbers or incinerators (as well as other means of reducing air toxics such as pollution prevention, work practices, or operational standards that are defined as control requirements by the rule) or the installation of technology hardware or software systems that are ancillary equipment required to properly operate and monitor required pollution control equipment. If you are a new source, you must comply upon startup. **Figure 2.2** outlines important compliance and reporting dates.

What pollutants am I emitting?

Research by the EPA has shown that HAP emissions from primary aluminum production facilities include (but are not limited to) **hydrogen fluoride (HF) and polycyclic organic matter (POM)**. Short-term inhalation exposure to gaseous HF and related fluoride compounds can cause severe respiratory damage in humans. Long-term inhalation exposure to low levels of HF by humans has been reported to result in irritation and congestion of the nose, throat, and bronchi while damage to liver, kidney, and lungs has been observed in animals. POM includes a combination of polycyclic aromatic hydrocarbons (PAHs) such as anthracene, benzo(a)pyrene, and naphthalene, among others. Several of the PAH compounds, including benzo(a)anthracene, benzo(a)pyrene, benzo(b)fluoranthene, benzo(k)fluoranthene, chrysene, dibenzo(a,h)anthracene, and indeno(1,2,3-cd)pyrene, are probable human carcinogens, and cancer is the major concern from exposure to these PAHs.

Figure 2.1 Subpart LL: Does It Apply to Me?

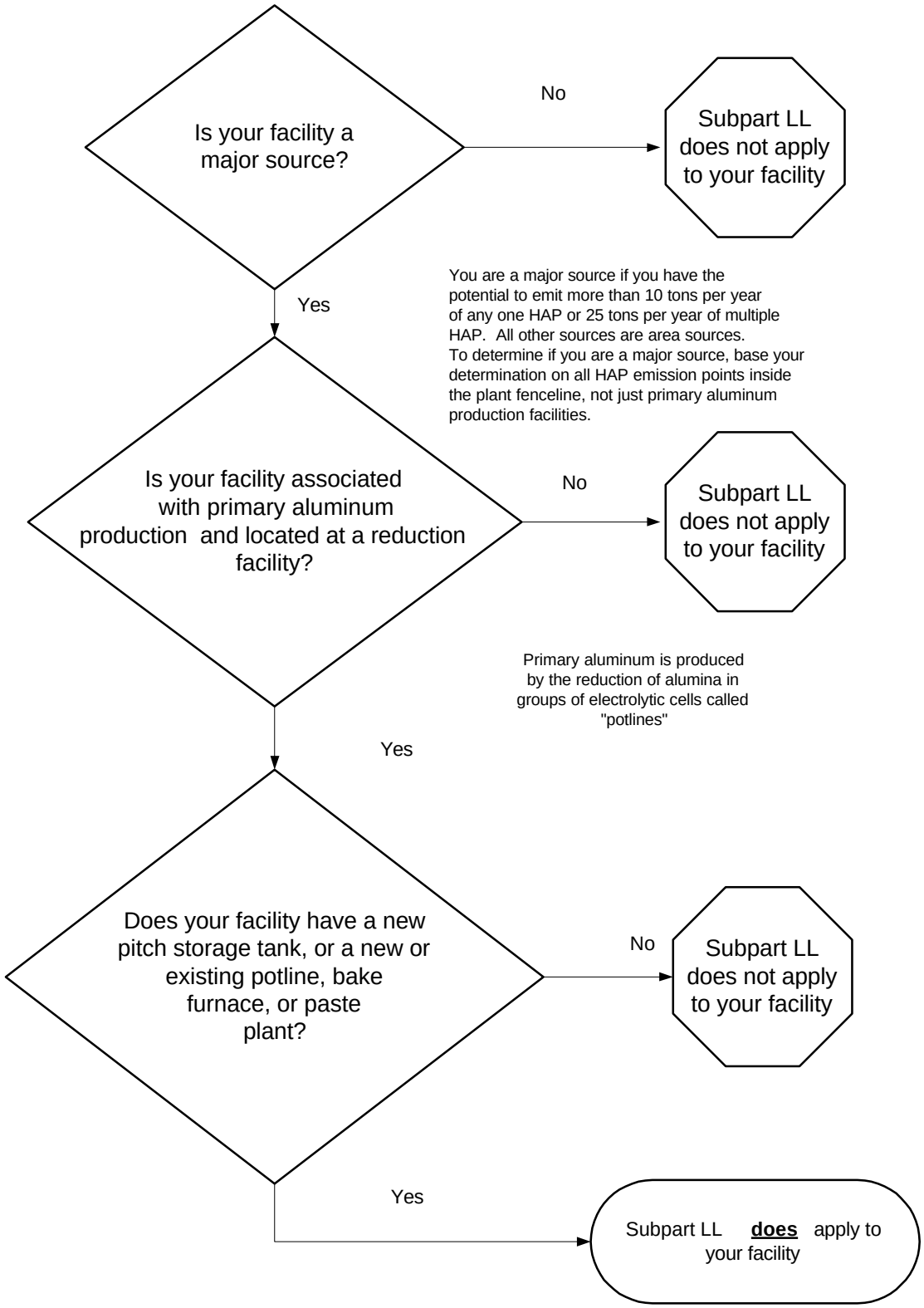

Table 2.1 Quick Reference Compliance Guide

Source	Pollutant	Standard	Compliance/Testing	Method Preferred / Alternate
Paste production plant Mixing through pressing, hot green scrap, excluding pitch tank	POM	Equipment	Parametric monitoring Daily visual opacity inspections	Coke scrubber: coke and air flow measurement
Anode bake furnace Control device only	POM TF	0.18 lb POM/ton green carbon 0.20 lb TF/ton green carbon	Annual Annual Parametric monitoring Daily visual opacity inspections	EPA Method 315 EPA Method 13A or 13B Alumina scrubber: alumina and air flow measurements
Potrooms	TF and POM	TF limits for prebake (see Table 3-1) and TF/POM limits for Soderbergs (see Table 3-2)	*Roof Monitor* TF: 3 runs/month minimum - first potline type. Similar potline options POM: 3 runs/quarter minimum *Primary Control System (TF and POM)* (1) test/year/potline control device Parametric monitoring Daily visual opacity inspections	TF: EPA Method 14 or 14A (Alcan cassette); POM: EPA Method 315 TF:EPA Method 13A or B POM: EPA Method 315 Alumina scrubber: alumina and air flow Wet scrubber: water and air flow ESPs: voltage and secondary current
Reports			Notification of applicability Annual compliance certification Semi-annual if excess emissions	

/

Figure 2.2 Compliance Timeline (for new sources and plants that must comply in 2 years)

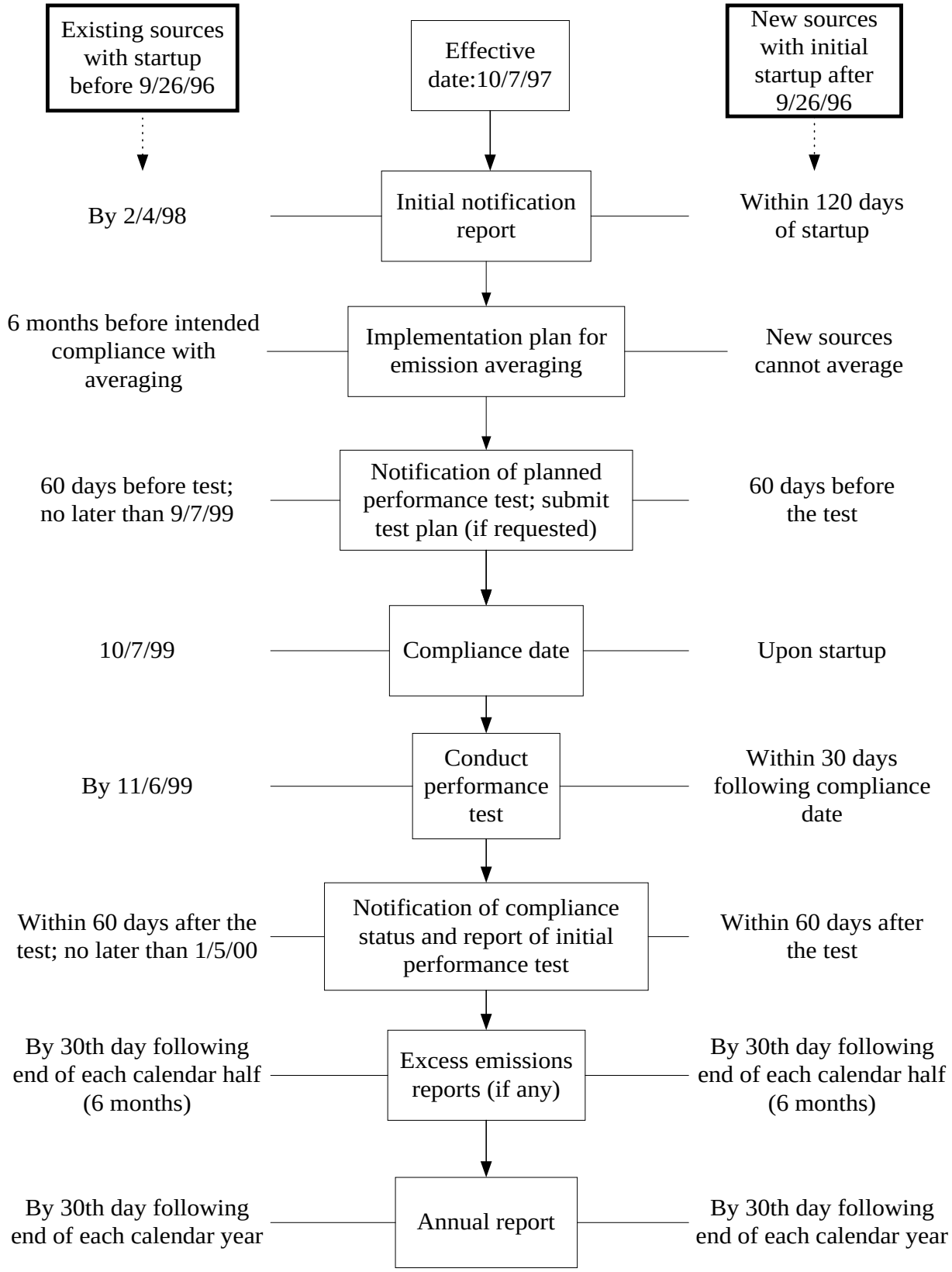

What do the potline sections of the rule cover?

Different emission limits may apply to your potline according to the type of aluminum production process. The different types of processes are described in **Appendix B**. The potline sections of the rule cover existing potlines, new or reconstructed potlines, and new, modified, or reconstructed potroom groups.

If you are interested in this requirement	See this section of rule for more information...
TF and POM emission limits for an existing potline	§ 63.843(a)
TF and POM emission averaging limits and requirements for multiple existing potlines	§ 63.846, Tables 1 and 2
TF and POM emission limits for a new or reconstructed potline	§ 63.844(a)
Incorporation of NSPS for potroom groups	§ 63.845
Performance test requirements	§ 63.847
Emission monitoring when incorporating the NSPS	§ 63.848
Emission monitoring for a potline	§ 63.848
Notifications, records, and reports	§ 63.850

What is exempt under these sections of the rule?

No potlines are exempt under the rule.

Do I have any compliance options?

If you have an existing potline, you have **two** main regulatory options:

- **Option 1:** Meet the emission limits for each individual potline. [§ 63.843(a)]
- **Option 2:** Average emissions from multiple existing potlines and meet limits based on the number of potlines in a group. [§ 63.846(b)]

What emission limits must I meet?

Table 3.1 shows TF emission limits (lb/ton of aluminum produced) for all **existing** prebake and Soderberg potlines **Table 3.2** shows POM emission limits for existing Soderberg potlines. These tables give the emission limits for individual potlines and for emission averaging.
The emission averaging limits are based on the number of potlines in the group. If you choose to use emission averaging:

- **!** Averaging is restricted to like sources (TF emissions from a potline can be averaged only with TF emissions from a potline at the same site)
- **!** Averaging of TF and POM emissions is not allowed
- **!** Only existing potlines can use emission averaging
- **!** Emission averaging is not allowed in any State that excludes this option from its approved operating permit program.
- **!** Your regulatory authority must approve an implementation plan before you begin emission averaging.

Tables 3.1 and 3.2 also show the plants assigned to each category or subcategory. If you change a potline (except for a reconstructed potline) such that the applicable subcategory also changes, you must meet the emission limit for the original subcategory or the new subcategory, whichever is more stringent.

A **new or reconstructed** potline must meet a TF limit of 1.2 lb/ton of aluminum produced and a POM limit of 0.63 lb/ton of aluminum produced. The TF limit applies to all types of potlines while the POM limit applies to all Soderberg potlines.

What are the key definitions?

New potline	A potline for which you commence construction on or after September 26, 1996
Reconstructed potline	An existing potline where the capital cost of the new components is over 50 percent of the capital cost required to construct a comparable new potline or potline group and it is technologically and economically feasible to meet the applicable emission limits for new sources

Different emission limits apply if you incorporate the the NSPS requirements. If you have an existing Soderberg, CWPB2, or CWPB3 potline and you add a new potline group or your existing potline is associated with a potroom group that meets the definition of **modified potroom group** or **reconstructed potroom group**, you can not exceed a lower or upper TF emission limit that you calculate using the

procedures in the rule. **Chapter 7** shows how to calculate these limits. A 10-percent opacity limit also applies unless your regulatory authority approves an **alternative opacity limit**.

- **!** If you exceed the upper limit for TF, you will be considered in compliance if you demonstrate that exemplary operation and maintenance were used with respect to the emission control system and that proper control equipment was operating at the potline at the time.

- **!** You must recalculate the TF emission limits each time a new potroom group is added to the potline and each time an additional potroom group meets the definition of "modified potroom group" or "reconstructed potroom group".

What are the key definitions?

Potroom group	Uncontrolled potroom, potroom that is controlled individually, or a group of potrooms or potroom segments ducted to a common control system
Modified potroom group	Existing potroom group to which any physical change in, or change in the method of operation of, results in an increase in the amount of TF emitted into the atmosphere by that potroom group. See § 63.845(a)(1) for activities and operations that are not, by themselves, considered to result in a potroom group modification.
Reconstructed potroom group	Existing potroom group for which the components are replaced to such an extent the fixed capital cost exceeds 50 percent of the fixed capital cost that would be required to construct a comparable entirely new potroom group and for which it is technologically and economically feasible to meet the applicable TF emission limit

What monitoring must I do?

Your major monitoring requirements include:

- **!** **Monthly** measurements of TF secondary emissions (unless you get a monitoring alternative) with **annual** measurements of primary emissions [63.848(a)]

- **Quarterly** measurements of POM secondary emissions from each Soderberg potline with **annual** measurements of primary emissions [63.848(b)]

- **Continuous parameter monitoring system** for each emission control device [63.848(f)]

- Monitoring device(s) to determine the **daily weight of aluminum produced** [63.848(j)]

- **Daily visual inspection** of the exhaust stack(s) of each control device for evidence of any visible emissions indicating abnormal operation [63.848(g)]

- Daily inspection of **wet roof scrubbers for secondary emission control** [63.848(f)(5)]

- Initiate **corrective action** within 1 hour if a monitoring device for a primary control device measures an operating parameter outside the limit(s) established, if visible emissions indicating abnormal operation are observed during daily inspection, or if a problem is detected during the daily inspection of a wet roof scrubber for secondary emission control [§ 63.848(h)]

- **Do not allow the control device operating limit to be exceeded more than six times in a semi-annual reporting period. Only one violation will be attributed to a given 24-hour period**. **An exceedance during a startup, shutdown, or malfunction is not counted provided you demonstrate that you operated and maintained the affected process and control equipment according to the procedures in your startup, shutdown, and malfunction plan.** [§ 63.848(i)]

Table 3.3 gives you details about your monitoring requirements. See **Chapter 7** for more information on test methods, procedures, and how to make the calculations.

What records must I keep?

You must keep records documenting information needed to assess whether you have complied with the limits and requirements for potlines. **Table 3.4** gives a detailed list of record requirements for potlines. You can keep records on microfilm, on a computer, on computer disks, on magnetic tape or microfiche.

You must keep each record for at least 5 years after the date it was made. You can keep the most recent 2 years of records at your facility, but you can store the other records offsite.

What plans and reports must I prepare?

You may be required to prepare up to **five** types of plans:

- **Site-specific test plan**. You must prepare a plan but you don't have to submit it for approval unless requested by your regulatory authority. [§§ 63.7 and 63.847(b)]

- **Startup, shutdown, and malfunction plan.** You must prepare and implement a plan but you don't have to submit it for review unless requested by your regulatory authority.

While you don't have to include the plan in your permit application or operating permit you must incorporate it by reference in your permit. [§§ 63.6(e)(3) and 63.850(c)]

- **Continuous Parameter Monitoring Plan.** You must submit this plan to your regulatory authority for approval as part of the notification of compliance status. [§ 63.848(f)]

- **Monitoring device accuracy and calibration.** You must submit recommended accuracy requirements to your regulatory authority for approval as part of the notification of compliance status. You also must certify that all devices meet the accuracy requirements. You must calibrate each monitoring device according to the manufacturer's instructions. [§ 63.848(k)]

- **Implementation Plan for Emissions Averaging**. This plan is required only if you elect to meet the emission limits for averaging emissions from multiple existing potlines. [§ 63.846(d)]

- **Engineering Plan**. This plan may be required as part of your notification of compliance approach. You must submit the plan if requested by your regulatory authority. [§ 63.850(a)(8)]

You also must provide certain written notifications and make one-time or periodic reports. The notifications and reports that may apply to potlines are listed in **Table 3-5**. **Chapter 8** describes each type of plan or report that you must prepare.

How do I show compliance?

First, you must prepare a **site-specific test plan**. See **Chapter 8** for detailed information on the requirements for your site-specific test plan.

Then, do an **initial performance test** to show that you meet the limits. The rule requires that you begin the performance tests starting the first month after your compliance date. Follow the procedures in your site-specific test plan as well as the procedures in 40 CFR 63.7 and the rule. **Chapter 7** explains how to do the performance test and gives additional information on test methods and calculation procedures.

Table 3.1 What Emission Limits Must *EXISTING PREBAKE POTLINES* Meet?

CWPB1		CWPB2		CWPB3		SWPB	
Alcan, Henderson, SC Alcoa, Alcoa, TN Alcoa, Badin, NC Alcoa, Wenatchee, WA Alumax, Mt. Holly, SC Noranda, New Madrid, MO		Alcoa, Rockdale, TX Kaiser, Mead, WA Ormet, Hannibal, OH Century, Ravenswood, WV Reynolds, Troutdale, OR Vanalco, Vancouver, WA		NSA, Hawesville, KY		Eastalco, Frederick, MD Intalco, Ferndale, WA	
↓		↓		↓		↓	
Meet limit for each line:		*Meet limit for each line:*		*Meet limit for each line:*		*Meet limit for each line:*	
↓		↓		↓		↓	
1.9 lb/ton TF		**3.0 lb/ton TF**		**2.5 lb/ton TF**		**1.6 lb/ton TF**	
***Or** use emission averaging:*		***Or** use emission averaging:*		***Or** use emission averaging:*		***Or** use emission averaging:*	
↓		↓		↓		↓	
No. of potlines	lb/ton TF	No. of potlines	lb/ton TF	No. of potlines	lb/ton TF	No. of potlines	lb/ton TF
2	1.7	2	2.9	2	2.3	2	1.4
3	1.6	3	2.8	3	2.2	3	1.3
4	1.5	4	2.7	4	2.2	4	1.3
5	1.5	5	2.7	5	2.1	5	1.2
6, 7, 8	1.4	6, 7, 8	2.6	6, 7, 8	2.1	6, 7, 8	1.2

Table 3.2 What Emission Limits Must *EXISTING SODERBERG POTLINES* Meet?

HSS			VSS1			VSS2		
Kaiser, Tacoma, WA Reynolds, Longview, WA Reynolds, Massena, NY			Goldendale, Goldendale, WA Northwest, The Dalles, OR			Columbia Falls, Columbia Falls, MT		
↓			↓			↓		
Meet limit for each line:			*Meet limit for each line:*			*Meet limit for each line:*		
↓			↓			↓		
2.7 lb/ton TF			**2.2 lb/ton TF**			**2.7 lb/ton TF**		
4.7 lb/ton POM			**2.4 lb/ton POM**			**3.6 lb/ton POM**		
***Or** use emission averaging:*			***Or** use emission averaging:*			***Or** use emission averaging:*		
↓			↓			↓		
No. of potlines	lb/ton TF	lb/ton POM	No. of potlines	lb/ton TF	lb/ton POM	No. of potlines	lb/ton TF	lb/ton POM
2	2.5	4.1	2	2.0	2.1	2	2.6	3.2
3	2.4	3.8	3	1.9	2.0	3	2.5	3.0
4	2.4	3.7	4	1.8	1.9	4	2.5	2.9
5	2.3	3.5	5	1.7	1.9	5	2.4	2.9
6	2.3	3.5	6	1.7	1.8	6	2.4	2.8
7	2.3	3.4	7	1.7	1.8	7	2.4	2.8
8	2.3	3.3	8	1.7	1.8	8	2.4	2.7

Table 3.3 Monitoring Requirements for Potlines

If your emission point is	And you have chosen, as your overall compliance strategy, the . . .	And you are using this type of control device . . .	Then you must monitor as described below . . .	According to these sections of the rule ...
Existing prebake or Soderberg potline	TF limit for individual potline (Option 1) **OR** TF emission averaging limit for multiple potlines (Option 2)	Any	Do **monthly** performance tests to determine compliance with TF limits. Follow the procedures in you site-specific test plan and in §§ 63.847 and 63.849 of the rule. **!** Compute and record the monthly average from at least **three runs for secondary emissions and the previous 12-month average (minimum of three runs per year) for the primary control system.** Iinclude all valid runs done in the monthly average. For secondary emissions, the duration of each run must represent a complete operating cycle **OR** **!** Instead of measuring TF secondary emissions from each potline, measure emissions from one potline and monitor other **similar potlines** by alternative procedures, such as an hydrogen fluoride (HF) continuous emission monitoring system **!** If you qualify for **reduced sampling frequency**, you can measure secondary TF emissions quarterly instead of monthly	§ 63.848(a) § 63.848(d) § 63.848(e)
Existing Soderberg potline	POM limit for individual potline (Option 1) OR POM emission averaging limit for multiple potlines (Option 2)	Any	Do **quarterly** performance tests to determine compliance with POM limits. Follow the procedures in your site-specific test plan and in §§ 63.847 and 63.849 of the rule. **!** Compute and record the the quarterly average from at least **one run per month for secondary emissions and the previous 12 month average of all runs for the primary control system (3 runs minimum per year).** Include all valid runs in the quarterly average. For secondary emissions, the duration of each run must represent a complete operating cycle. Sample the primary control system over an 8-hr period unless your regulatory authority approves an alterative sampling time	§ 63.848(b)

Table 3.3 Monitoring Requirements for Potlines (cont'd)

If your emission point is	And you have chosen, as your overall compliance strategy, the . . .	And you are using this type of control device . . .	Then you must monitor as described below . . .	According to these sections of the rule ...
New or reconstructed potline	TF limit for individual potline or POM limit for individual potline	Any	Same as above	
Existing Soderberg, CWPB2, or CWPB3 potline that adds a new potroom group or associated with a modified or reconstructed potroom group	Lower and upper TF limit	Any	Conduct **monthly** performance tests to determine compliance with TF limits. Follow the procedures in your site-specific test plan and in §§ 63.845, 63.847 and 63.849 of the rule.	
			! Determine the TF emission rate for secondary emissions and the primary control device for each new, modified, or reconstructed potroom group	§ 63.845(g)(1)
			! Determine the TF emission rate for secondary emissions and the primary control device for each potroom group or section of a potroom group within the potline that is not a new, modified, or reconstructed potroom group. You can do this either or two ways	§ 63.845(g)(2)
			(1) Determine the mass emission rate from at least one potroom group within the potline that is not a new, modified, or reconstructed potroom group using the methods, procedures, and equations in §§ 63.847, 63.848, and 63.849	§ 63.845(g)(2)(i)
			(2) Use the sampling results for the new, modified, or reconstructed potroom group to represent the entire potline provided the results are representative of the entire potline. To be representative, all the potroom groups associated with the potline must be substantially equivalent in structure, operability, and type, volume, and concentration of emissions.	§ 63.845(g)(2)(ii)
			OR	
			Instead of sampling each new, modified, or reconstructed potroom group and each potroom group or section of the potroom group that is not a new, modified, or recontructed potroom group, you can do **representative sampling** of the entire potline if your regulatory authority approves your request	§ 63.845(g)(4)

Table 3.3 Monitoring Requirements for Potlines (cont'd)

If your emission point is	And you have chosen, as your overall compliance strategy, the . . .	And you are using this type of control device . . .	Then you must monitor as described below . . .		According to these sections of the rule ...
Any potline	All	Any	!	Install, operate, and maintain a monitoring device to determine the daily weight of aluminum produced	§ 63.848(j)
Any potline	All	Dry alumina scrubber	!	Install, calibrate, operate, and maintain **continuous parameter monitoring systems** to measure and record dry alumina flow and air flow. or Alternative operating parameters approved by your regulatory authority	§ 63.848(f)(1) § 63.848(l)
			!	Calibrate it according to the manufacturer's instructions	§ 63.848(k)
			!	Visually inspect the control device exhaust stack each day for evidence of any visible emissions indicating abnormal operation. Record the results of each inspection	§ 63.848(g)
			!	Initiate corrective action procedures within 1 hour if the monitoring device measures an operating parameter outside the established limit(s) or you observe visible emissions indicating abnormal operation from the exhaust stack during a daily inspection	§ 63.848(h)
		Wet scrubber for primary emission control	!	Install, calibrate, operate, and maintain **continuous parameter monitoring systems** to measure and record water flow and air flow or Alternative operating parameters approved by your regulatory authority	§ 63.848(f)(3) § 63.848(l)
			!	Calibrate it according to the manufacturer's instructions	§ 63.848(k)
			!	Visually inspect the control device exhaust stack each day for evidence of any visible emissions indicating abnormal operation. Record the results of each inspection	§ 63.848(g)
			!	Initiate corrective action within 1 hour if the monitoring device measures an operating parameter outside the established limit(s) or you observe visible emissions indicating abnormal operation from the exhaust stack during a daily inspection	§ 63.848(h)

Table 3.3 Monitoring Requirements for Potlines (cont'd)

If your emission point is	And you have chosen, as your overall compliance strategy, the . . .	And you are using this type of control device . . .	Then you must monitor as described below . . .		According to these sections of the rule ...
		Electrostatic precipitator	!	Install, calibrate, operate, and maintain **continuous parameter monitoring system** to measure and record voltage and secondary current or Alternative operating parameters approved by your regulatory authority	§ 63.848(f)(4) § 63.848(l)
			!	Calibrate it according to the manufacturer's instructions	§ 63.848(k)
			!	Visually inspect the control device exhaust stack each day for evidence of any visible emissions indicating abnormal operation. Record the results of each inspection	§ 63.848(g)
			!	Initiate corrective action procedures within 1 hour if the monitoring device measures an operating parameter outside the established limit(s) or you observe visible emissions from the exhaust stack during a daily inspection indicating abnormal operation	§ 63.848(h)

Table 3.3 Monitoring Requirements for Potlines (cont'd)

If your emission point is	And you have chosen, as your overall compliance strategy, the . . .	And you are using this type of control device . . .	Then you must monitor as described below . . .		According to these sections of the rule ...
		Wet roof scrubber for secondary emission control	!	Install, calibrate, operate, and maintain **continuous parameter monitoring system** to measure and record total water flow or Alternative operating parameters approved by your regulatory authority	§ 63.848(f))(5)(i) § 63.848(l)
			!	Calibrate it according to the manufacturer's instructions	§ 63.848(k)
			!	Inspect each control device at least once during the operating day to ensure proper operation and record the results of each inspection	§ 63.848(f)(5)(ii)
			!	Visually inspect the control device exhaust stack(s) each day for evidence of any visible emissions indicating abnormal operation. Record the results of each inspection	§ 63.848(g)
			!	Initiate corrective action within 1 hour if the monitoring device measures an operating parameter outside the established limit(s) or you observe visible emissions from the exhaust stack indicating abnormal operation during a daily inspection or you detect a problem indicating improper operation during the daily inspection	§ 63.848(h)
		One not listed above		Request that regulatory authority include recommended operating parameters to be monitored in your operating permit	§ 63.848(m)

Table 3.4 Recordkeeping Requirements for Potlines

If your emission point is	Then you must keep records as described below . . .	According to these sections of the rule ...
Any potline	Records required by § 63.10(b)	§ 63.850(e)(4)
	! The occurrence and duration of each startup, shutdown, or malfunction of process equipment	
	! The occurrence and duration of each malfunction of the air pollution control equipment	
	! All maintenance performed on the air pollution control equipment	
	! Actions taken during a startup, shutdown, or malfunction (including corrective action) when actions are different from the procedures in the startup, shutdown, and malfunction plan	
	! All information needed to demonstrate conformance with the startup, shutdown, and malfunction plan (including corrective action) when all your actions are consistent with the procedures in the plan	§ 63.848(d)
	! Each period a continuous monitoring system is malfunctioning or inoperative	
	! All required measurements needed to demonstrate compliance with the standard that support data you are required to report (inlcuding but not limited to, data from a continuous monitoring system and raw data from performance tests and performance evaluations)	§ 63.848(e)
	! All results of performance test and performance evaluations (including measurements needed to determine the conditions of the test and performance evaluation	
	! All calibration checks, adjustments, and maintenance performed on a continuous monitoring system	
	! Any information demonstrating whether an affected source is meeting the requirements for a waiver from recordkeeping or reporting requirements (if applicable)	
	! All emission levels relative to the criterion for obtaining permission to use an alternative to the relative accuracy test (if applicable)	
	Daily production rate of aluminum	§ 63.850(e)(4)(i)
	Copy of startup, shutdown, and malfunction plan	§ 63.850(e)(4)(iii)
	Records supporting monitoring of similar potlines demonstrating that the performance of similar potlines is the same as or better than that of potlines sampled by manual methods	§ 63.850(e)(4)(vi)

Table 3.4 Recordkeeping Requirements for Potlines (cont'd)

If your emission point is	Then you must keep records as described below . . .	According to these sections of the rule ...
	Records supporting a request for reduced sampling frequency	§ 63.850(e)(4)(vii)
	Records supporting the correlation of emissions measured by a continuous emission monitoring system to emissions measured by manual methods and the derivation of the alternative emission limit derived from the measurements	§ 63.850(e)(4)(viii)
	Current implementation plan for emission averaging and any subsequent amendments	§ 63.850(e)(4)(ix)
	Records of the daily visual inspection of each control device for proper operation	§ 63.850(e)(4)(x)
	Records of the daily inspection of each exhaust stack for evidence of visible emissions indicating abnormal operation	§ 63.850(e)(4)(xi)
	Records documenting the corrective actions taken when the control device operating parameter limits were exceeded, when visible emissions indicating abnormal operation were observed during a daily inspection, or when a problem was detected during the daily inspection of a wet roof scrubber for secondary control	§ 63.850(e)(4)(xiii)
	Records documenting any POM data that are invalidated due to the installation and startup of a cathode	§ 63.850(e)(4)(xiv)
	Records documenting the portion of TF that is measured as particulate matter and the portion that is measured as gaseous when the particulate and gaseous fractions are quantified separately using an approved test method	§ 63.850(e)(4)(xv)

Table 3.4 Recordkeeping Requirements for Potlines (cont'd)

If your emission point is	Then you must keep records as described below . . .	According to these sections of the rule ...
Any potline with an HF continuous emission monitoring system	Records required by § 63.10(c): ! All required continuous monitoring system measurements ! The date and time identifying each period the continuous monitoring system was inoperative except for zero (low-level) and high-level checks or out of control ! The nature of repairs or adjustments to the continuous monitoring system that was inoperative or out of control. You may use the startup, shutdown and malfunction plan or records to satisfy this requirement provided it adequately addresses the requirement ! The specific identification (i.e., date and time) of each period of excess emissions and parameter monitoring exceedances that occurs during a startup, shutdown, or malfunction or during a period other than a startup, shutdown, or malfunction. ! The nature and cause of any malfunction (if known) and the corrective action taken or preventive measure adopted. You may use the startup, shutdown, and malfunction plan or records to satisfy this requirement provided if adequately addresses the requirement ! Total process operating time during the reporting period ! Procedures that are a part of a quality control program	§ 63.850(e)(4)(xii)

Table 3.5 Notifications and Reports for Potlines

Notifications		Reports	
!	Notification of applicability if you are an area source and subsequently increase your emissions such that you are a major source subject to the rule	!	Annual report summarizing all performance tests done after the initial performance test
!	Notification of applicability for an affected source if the startup date is before the effective date (10/7/97)	!	Startup, shutdown, and malfunction reports
!	Notification of applicability for an affected source if the affected source is new or reconstructed, the startup date is after the effective date (10/7/97), and an application for construction or reconstruction is not required	!	Semi-annual excess emissions report
!	If you construct or reconstruct after the effective date (10/7/97) and an application for approval of construction or reconstruction is required: Intention to construct or reconstruct Date construction or reconstruction began Anticipated date of startup Actual date of startup Application for approval or construction or reconstruction	!	If you choose to comply with the NSPS provisions in the rule: Report within 30 days of any performance test that shows emissions that fall between the lower and upper limit
!	Notification of initial performance test	!	Annual compliance certification
!	Notification of compliance status (include results of initial performance test)		
!	Notification of compliance approach (if requested)		
!	If you choose to comply with the NSPS provisions in the rule: Notification that the capital cost of the proposed new potroom components exceeds 50 percent of the fixed capital cost that would be required to construct a comparable entirely new potroom group		

CHAPTER 4 - Complying with requirements for anode bake furnaces

What is covered under these sections of the rule?

Different emission limits apply to your existing anode bake furnace and your new or reconstructed furnace. The anode bake furnace sections of the rule cover the emission limits for individual furnaces and groups of furnaces in an emissions averaging plan.

If you are interested in this requirement	See this section of rule for more information...
TF and POM emission limits for an existing anode bake furnace	§ 63.843(c)(1)-(2)
TF and POM emission limits for a new or reconstructed anode bake furnace device	§ 63.844(c)
TF and POM emission averaging limits and requirements	§ 63.846, Table 3
Performance test requirements	§ 63.847(c)(4), (h)
Emission monitoring	§ 63.848(c), (f)-(l)
Notifications, reports, and records	§ 63.850

What is exempt under these sections of the rule?

The rule **doesn't** apply to any existing anode bake furnace that is not located on the same site as a primary aluminum reduction plant. In this case, you must comply with the State MACT determination from your regulatory authority [§ 63.840(b)].

Do I have any compliance options?

If you have an existing furnace, you have **two** major regulatory options:

- **Option 1:** Meet the emission limits for each individual furnace. An individual furnace includes multiple bake furnaces controlled by a common control device. [§ 63.843(c)]

- **Option 2:** Average emissions from multiple existing furnaces and meet limits based on the number of furnaces in a group. [§ 63.846(c)]

What emission limits must I meet?

TF and POM emission limits (lb/ton of green anode) for all **existing** anode bake plants are shown in **Table 4.1.** This table also gives the emission limits for emission averaging.

If you choose to use the limits for **emission averaging**:

- **!** Averaging is restricted to like sources (TF emissions from an anode bake furnace can be averaged only with TF emissions from an anode bake furnace at the same site)

- **!** Averaging of TF and POM emissions is not allowed

- **!** Only existing anode bake furnaces can use emission averaging

- **!** Emission averaging is not allowed in any State that excludes this option from its approved operating permit program.

- **!** Your regulatory authority must approve an implementation plan before you begin emission averaging.

Emissions of TF from a **new or reconstructed** anode bake furnace can't be over 0.02 lb/ton of green anode. Emissions of POM can't exceed 0.05 lb/ton of green anode.

What monitoring must I do?

Your major monitoring requirements include:

- **!** **Annual** performance tests for TF and POM emissions [§ 63.848(c)]

- **!** **Continuous parameter monitoring system** for each emission control device [63.848(f)]

- **!** Monitoring device(s) to determine the **daily weight of green anode** placed in the furnace [63.848(j)]

- **!** **Daily visual inspection** of the exhaust stack(s) of each control device for evidence of any visible emissions indicating abnormal operation [63.848(g)]

- **!** Initiate **corrective action** within 1 hour if a monitoring device for a primary control device measures an operating parameter outside the limit(s) established or if visible emissions indicating abnormal operation are observed during daily inspection [§ 63.848(h)]

- **!** **Do not allow the control device operating limit to be exceeded more than six times in a semi-annual reporting period. Only one violation will be attributed to a given 24-hour period. An exceedance during a startup, shutdown, or malfunction is not counted provided you demonstrate that you operated and maintained the affected process and control equipment according to the procedures in your startup, shutdown, and malfunction plan.** [§ 63.848(i)]

Table 4.2 gives you details about your monitoring requirements. See **Chapter 7** for more information on test methods, procedures, and how to make the calculations.

What records must I keep?

Table 4.3 gives a detailed list of records you must maintain for anode bake furnaces. You can keep records on microfilm, on a computer, on a computer disk, on magnetic tape, or on microfiche.

Keep each record at each 5 years after the date it was made. You must keep the most recent 2 years of records onsite but you can store the others offsite.

What plans and reports must I prepare?

You may need to prepare up to **four** types of plans:

- **Site-specific test plan**. You must prepare a plan but you don't have to submit it for approval unless requested by your regulatory authority. [§§ 63.7 and 63.847(b)]

- **Startup, shutdown, and malfunction plan.** You must prepare and implement a plan but you don't have to submit it for review unless requested by your regulatory authority. While you don't have to include the plan in your permit application or operating permit you must incorporate it by reference in your permit. [§§ 63.6(e)(3) and 63.850(c)]

- **Continuous Parameter Monitoring Plan.** You must submit this plan to your regulatory authority for approval as part of the notification of compliance status. [§ 63.848(f)]

- **Monitoring device accuracy and calibration.** You must submit recommended accuracy requirements to your regulatory authority for approval as part of the notification of compliance status. You also must certify that all devices meet the accuracy requirements. You must calibrate each monitoring device according to the manufacturer's instructions. [§ 63.848(k)]

- **Implementation Plan for Emissions Averaging**. This plan is required only if you elect to meet the emission limits for averaging emissions from multiple existing potlines. [§ 63.846(d)].

You also must provide certain notifications and make one-time or periodic reports. The notifications and reports that may apply to bake furnaces are listed in **Table 4.4**. **Chapter 8** describes each type of plan or report that you must prepare.

How do I show compliance?

First, you must prepare a **site-specific test plan**. See **Chapter 8** for detailed information on the requirements for your site-specific test plan.

Then, do a **performance test** for each anode bake furnace to show that you meet the limits. The rule requires that you begin the performance test starting the first month after your compliance date. Follow the procedures in your plan as well as the procedures in 40 CFR 63.7 and the rule. **Chapter 7** explains how to do the performance test and gives additional information on test methods and calculation procedures.

Table 4.1 What Emission Limits Must Existing Anode Bake Furnaces Meet?

TF emissions		POM emissions	
Meet limit for each furnace:		*Meet limit for each furnace:*	
↓		↓	
0.20 lb/ton of green anode		**0.18 lb/ton of green anode**	
***Or** use emission averaging:*		***Or** use emission averaging:*	
↓		↓	
No. of furnaces	lb/ton of green anode	No. of furnaces	lb/ton of green anode
2	0.11	2	0.17
3	0.090	3	0.17
4	0.077	4	0.17
5	0.070	5	0.17

Table 4.2 Monitoring Requirements for Anode Bake Furnaces

If your emission point is	And you have chosen, as your overall compliance strategy, the . . .	And you are using this type of control device . . .	Then you must monitor as described below . . .	According to these sections of the rule ...
Existing furnace	TF and POM limit for individual furnace (Option 1) **OR** TF or POM emission averaging limit for multiple furnaces (Option 2)	Any	Do **annual** performance tests to determine compliance with TF and POM limits. Follow the procedures in you site-specific test plan and in §§ 63.847 and 63.849 of the rule. ! Compute and record the annual average (minimum of three runs per year) for the primary control device. You must include all valid runs done in the annual average.	§ 63.848(c) § 63.848(d)
New or reconstructed furnace	TF and POM limits for individual furnace	Any	Same as above	
All furnaces		Any	! Install, operate, and maintain a monitoring device to determine the daily weight of green anode material placed in the furnace	§ 63.848(j)

Table 4.2 Monitoring Requirements for Anode Bake Furnaces (cont'd)

If your emission point is	And you have chosen, as your overall compliance strategy, the . . .	And you are using this type of control device . . .	Then you must monitor as described below . . .		According to these sections of the rule ...
Any furnace		Dry alumina scrubber	!	Install, calibrate, operate, and maintain **continuous parameter monitoring systems** to measure dry alumina flow and air flow	§ 63.848(f)(1)
				or	
				Alternative operating parameters approved by your regulatory authority	§ 63.848(l)
			!	Calibrate it according to the manufacturer's instructions	§ 63.848(k)
			!	Visually inspect the control device exhaust stack each day for evidence of any visible emissions indicating abnormal operation. Record the results of each inspection	§ 63.848(g)
			!	Initiate corrective action within 1 hour if the monitoring device measures an operating parameter outside the established limit(s) or you observe visible emissions indicating abnormal operation from the exhaust stack during a daily inspection	§ 63.848(h)
		Electrostatic precipitator	!	Install, calibrate, operate, and maintain **continuous parameter monitoring system** to measure and record voltage and secondary current	§ 63.848(f)(4)
				or	
				Alternative operating parameters approved by your regulatory authority	§ 63.848(l)
			!	Calibrate it according to the manufacturer's instructions	§ 63.848(k)
			!	Visually inspect the control device exhaust stack each day for evidence of any visible emissions indicating abnormal operation. Record the results of each inspection	§ 63.848(g)
			!	Initiate corrective action within 1 hour if the monitoring device measures an operating parameter outside the established limit(s) or you observe visible emissions from the exhaust stack during a daily inspection indicating abnormal operation	§ 63.848(h)
		Not listed above		Request that regulatory authority include recommended operating parameters to be monitored in your operating permit	§ 63.848(m)

Table 4.3 Recordkeeping Requirements for Anode Bake Furnaces

You must keep these records for each furnace . . .	According to these sections of the rule ...
Records required by § 63.10(b)	§ 63.850(e)(4)
! The occurrence and duration of each startup, shutdown, or malfunction of process equipment and each malfunction of air pollution control equipment ! All maintenance performed on the air pollution control equipment ! Actions taken during a startup, shutdown, or malfunction (including corrective action) when actions are different from the procedures in the startup, shutdown, and malfunction plan ! All information needed to demonstrate conformance with the startup, shutdown, and malfunction plan (including corrective action) when all your actions are consistent with the procedures in the plan ! Each period a continuous monitoring system is malfunctioning or inoperative ! All required measurements needed to demonstrate compliance with the standard that support data you are required to report (including but not limited to, data from a continuous monitoring system , raw data from performance tests and performance evaluations, and all results of performance test and performance evaluations) ! All calibration checks, adjustments, and maintenance performed on a continuous monitoring system ! Any information demonstrating whether an affected source is meeting the requirements for a waiver from recordkeeping or reporting requirements (if applicable) ! All emission levels relative to the criterion for obtaining permission to use an alternative to the relative accuracy test (if applicable)	
Daily production rate of green anode material added to the furnace	§ 63.850(e)(4)(i)
Copy of startup, shutdown, and malfunction plan	§ 63.850(e)(4)(iii)
Current implementation plan for emission averaging and any subsequent amendments	§ 63.850(e)(4)(ix)
Records of the daily visual inspection of each control device for proper operation	§ 63.850(e)(4)(x)
Records documenting the corrective actions taken when the control device operating parameter limits were exceeded or when visible emissions indicating abnormal operation were observed during a daily inspection	§ 63.850(e)(4)(xiii)

Table 4-4 Notifications and Reports for Anode Bake Plants

Notifications		Reports	
!	Notification of applicability if you are an area source and subsequently increase your emissions such that you are a major source subject to the rule	!	Annual report summarizing all performance tests done after the initial performance test
!	Notification of applicability for an affected source if the startup date is before the effective date (10/7/97)	!	Startup, shutdown, and malfunction reports
!	Notification of applicability for an affected source if the affected source is new or reconstructed, the startup date is after the effective date (10/7/97), and an application for construction or reconstruction is not required	!	Semi-annual excess emissions report
!	If you construct or reconstruct after the effective date (10/7/97) and an application for approval of construction or reconstruction is required: Intention to construct or reconstruct Date construction or reconstruction began Anticipated date of startup Actual date of startup Application for approval or construction or reconstruction	!	Annual compliance certification
!	Notification of initial performance test		
!	Notification of compliance status (include results of initial performance test)		

Chapter 5 - Complying with requirements for paste production plants

What is covered under this section?

The paste plant sections of the rule cover the equipment standard for existing, new, and reconstructed plants and provisions for use of an alternative control device.

If you are interested in this requirement	See this section of rule for more information...
Equipment standard for existing paste production plants	§ 63.843(b)(1)-(2)
Request for alternative control device	§ 63.843(b)(3)
Equipment standard for new or reconstructed paste production plant	§ 63.844(b)
Performance test requirements	§ 63.847(f), (h)(2)
Emission monitoring	§ 63.848 (f)-(i), (k)
Notifications, plans, reports, and records	§ 63.850

What is exempt under this section?

No paste production plants are exempt from the rule.

What are the requirements for paste production plants?

- Install, operate, and maintain equipment to capture and control POM emissions.
- Capture equipment must meet certain requirements, and you must use a closed vent system to transport captured emissions to a dry coke scrubber.
- **Note:** the paste production plant includes ***all operations from initial mixing to final forming (i.e., briquettes, paste, green anodes) within the paste plant, including conveyors and units managing heated liquid pitch.*** Existing liquid pitch storage tanks are not regulated by this section.

What are the requirements for a capture system?

- **!** Install and operate to meet minimum exhaust rates in chapters 3 and 5 of *Industrial Ventilation: Handbook of Recommended Practice* (American Conference of Governmental Industrial Hygienists, 22 ed., 1995)

- **!** Any revisions made to chapters 3 and 5 apply only after amendment of the rule to require the new information [§ 63.841(a)]

- **!** Chapters 3 and 5 of this handbook are available for **inspection** in the docket (A-92-60, Docket Item II-I-42) . You may **purchase** the handbook from: Customer Service Department, ACGIH, 1330 Kemper Meadow Drive, Cincinnati, Ohio 45240 (513) 742-2020

Do I have any compliance options?

You can:

- **!** Route emissions to a dry coke scrubber (described above); or

- **!** Request use of an **alternative control device**. If so, you must provide information and data showing that the alternative control device achieves less than:

  -- 0.011 lb of POM per ton of paste if your have continuous mixers in your paste plant

  -- 0.024 lb of POM per ton of paste if you have batch mixers in your paste plant

Chapter 8 gives more information on requesting an alternative control device.

What monitoring must I do?

Table 5.1 describes your monitoring requirements. Your major monitoring requirements are:

- **!** **Continuous parameter monitoring system** for each emission control device [63.848(f)]

- **!** **Daily visual inspection** of the exhaust stack(s) of each control device for evidence of any visible emissions indicating abnormal operation [63.848(g)]

- **!** Initiate **corrective action** within 1 hour if a monitoring device for a primary control device measures an operating parameter outside the limit(s) established or if visible emissions indicating abnormal operation are observed during daily inspection [§ 63.848(h)]

- **Do not allow the control device operating limit to be exceeded more than six times in a semi-annual reporting period. Only one violation will be attributed to a given 24-hour period. An exceedance during a startup, shutdown, or malfunction is not counted provided you demonstrate that you operated and maintained the affected process and control equipment according to the procedures in your startup, shutdown, and malfunction plan.** [§ 63.848(i)]

What records must I keep?

Table 5.2 gives a detailed list of records you must maintain for paste plants. You can keep records on microfilm, on a computer, on a computer disk, on magnetic tape, or on microfiche.

Keep each record at each 5 years after the date it was made. You must keep the most recent 2 years of records onsite but you can store the others offsite.

What plans and reports must I prepare?

You need to prepare **three** types of plans:

- **Startup, shutdown, and malfunction plan.** You must prepare and implement a plan but you don't have to submit it for review unless requested by your regulatory authority. While you don't have to include the plan in your permit application or operating permit you must incorporate it by reference in your permit. [§§ 63.6(e)(3) and 63.850(c)]

- **Continuous parameter monitoring plan.** You must submit this plan to your regulatory authority for approval as part of the notification of compliance status. [§ 63.848(f)]

- **Monitoring device accuracy and calibration.** You must submit recommended accuracy requirements to your regulatory authority for approval as part of the notification of compliance status. You also must certify that all devices meet the accuracy requirements. You must calibrate each monitoring device according to the manufacturer's instructions. [§ 63.848(k)]

You also must provide certain written notifications and make one-time or periodic reports. These are listed in **Table 5.3**. **Chapter 8** gives additional information on each type of plan, notification, or report.

How do I show compliance?

Install the capture and control equipment for the paste plant by your compliance date. Your regulatory authority will inspect your paste plant and review your records to ensure that you have installed the equipment and it meets the requirements in the rule.

Table 5.1 Monitoring Requirements for Paste Production Plants

If your emission point is	And you have chosen, as your overall compliance strategy, the . . .	And you are using the following control option . . .	Then you must monitor as described below . . .		According to these sections of the rule ...
Existing, new, or reconstructed paste production plant	Equipment standard	Dry coke scrubber	!	Install, operate, calibrate, and maintain a continuous parameter monitoring system for the measurement of coke flow and air flow from each dry coke scrubber	§ 63.848(f)(2)
				or	
			!	Alternative control device operating parameters approved by your regulatory authority	§ 63.848(l)
			!	Calibrate according to manufacturer's instructions	§ 63.848(k)
			!	Visually inspect the exhaust stack of each control device on a daily basis for evidence of any visible emissions indicating abnormal operation. Record the results of each inspection	§ 63.848(g)
			!	If the monitoring device measures an operating parameter outside the established limit(s) or you observe visible emissions indicating abnormal operation from the exhaust stack during a daily inspection, initiate corrective action procedures in the startup, shutdown, and malfunction plan within 1 hour and take the necessary corrective actions to remedy the problem	§ 63.848(j)
		Not listed	Request that regulatory authority include recommended operating parameters to be monitored in your operating permit		§ 63.848(m)

Table 5.2 Recordkeeping Requirements for Paste Production Plants

You must keep records as described below . . .	According to these sections of the rule ...
Records required by § 63.10(b)	§ 63.850(e)(4)
! The occurrence and duration of each startup, shutdown, or malfunction of process equipment	
! The occurrence and duration of each malfunction of the air pollution control equipment	
! All maintenance performed on the air pollution control equipment	
! Actions taken during a startup, shutdown, or malfunction (including corrective action) when actions are different from the procedures in the startup, shutdown, and malfunction plan	
! All information needed to demonstrate conformance with the startup, shutdown, and malfunction plan (including corrective action) when all your actions are consistent with the procedures in the plan	
! Each period a continuous monitoring system is malfunctioning or inoperative	
! All required measurements needed to demonstrate compliance with the standard that support data you are required to report (including but not limited to, data from a continuous monitoring system)	
! All calibration checks, adjustments, and maintenance performed on a continuous monitoring system	
! Any information demonstrating whether an affected source is meeting the requirements for a waiver from recordkeeping or reporting requirements (if applicable)	
! All emission levels relative to the criterion for obtaining permission to use an alternative to the relative accuracy test (if applicable)	
Records of design information for capture system	§ 63.850(e)(4)(iv)
Records of design information for an alternative emission control device	§ 63.850(e)(4)(v)
Copy of startup, shutdown, and malfunction plan	§ 63.850(e)(4)(iii)
Records of the daily visual inspection of each control device for proper operation	§ 63.850(e)(4)(x)
Records documenting the corrective actions taken when the control device operating parameter limits were exceeded, when visible emissions indicating abnormal operation were observed during a daily inspection	§ 63.850(e)(4)(xiii)

Table 5.3 Notifications and Reports for Paste Production Plants

Notifications		Reports	
!	Notification of applicability if your facility is an an area source and subsequently increase your emissions such that you are a major source subject to the rule	!	Startup, shutdown, and malfunction reports
!	Notification of applicability for an affected source if the startup date is before the effective date (10/7/97)	!	Semi-annual excess emissions report
!	Notification of applicability for an affected source if the affected source is new or reconstructed, the startup date is after the effective date (10/7/97), and an application for construction or reconstruction is not required	!	Annual compliance certification
!	If you construct or reconstruct after the effective date (10/7/97) and an application for approval of construction or reconstruction is required: Intention to construct or reconstruct Date construction or reconstruction began Anticipated date of startup Actual date of startup Application for approval or construction or reconstruction		
!	Notification of compliance status		

Chapter 6 - Complying with requirements for new pitch storage tanks

What is covered under this section?

The pitch storage tank sections of the rule cover the performance standards for new or reconstructed tanks.

If you are interested in this requirement	See this section of rule for more information...
Performance standard for a new or reconstructed pitch storage tank	§ 63.844(d)
Performance test requirements	§ 63.847(g)
Emission monitoring	§ 63.848(f),(g)(1), (h), (i), (k), (l), (m)
Notifications, plans, reports, and records	§ 63.850

What is exempt under this section?

The rule applies to each new or reconstructed pitch storage tank. It does not apply to an **existing** pitch storage tank (in place on or before September 26, 1996).

What are the requirements?

You must equip each tank with an emission control system designed and operated to reduce emissions of POM by 95 percent or more.

Do I have any compliance options?

The **performance standard** allows you to use any device, system, or method that reduces POM emissions by at least 95 percent. For example, you can:

- **!** Use an **add-on control device**, such as an incinerator, carbon adsorber, or condenser
- **!** Vent emissions to **another control device**, such as the the dry coke scrubber or alternative for the paste production plant
- **!** Use a **pollution prevention** approach that eliminates the formation and release of POM emissions.

What monitoring must I do?

Table 6-1 describes your monitoring requirements. Your major monitoring requirements are:

- **Continuous parameter monitoring system** for each emission control device or system. [§ 63.848(f)]. Your Continuous Parameter Monitoring Plan has to include a description of the parameters to be monitored, an explanation of the criteria used for selection of the parameter(s), and the frequency with which monitoring will be performed [§ 63.847(g)(1)].

- **Daily visual inspection** of the exhaust stack(s) of each control device for evidence of any visible emissions indicating abnormal operation [§ 63.848(g)]

- Initiate **corrective action** within 1 hour if a monitoring device measures an operating parameter outside the limit(s) established or if visible emissions indicating abnormal operation are observed during a daily inspection [§ 63.848(h)]

- **Do not allow the control device (or system) operating limit to be exceeded more than six times in a semi-annual reporting period. Only one violation will be attributed to a given 24-hour period. An exceedance during a startup, shutdown, or malfunction is not counted provided you demonstrate that you operated and maintained the affected process and control equipment according to the procedures in your startup, shutdown, and malfunction plan.** [§ 63.848(i)]

What records must I keep?

Table 6.2 gives a detailed list of records you must maintain for new pitch storage tanks. You can keep records on microfilm, on a computer, on a computer disk, on magnetic tape, or on microfiche.

Keep each record at each 5 years after the date it was made. You must keep the most recent 2 years of records onsite but you can store the others offsite.

What plans and reports must I prepare?

You need to prepare **three** types of plans:

- **Startup, shutdown, and malfunction plan.** You must prepare and implement a plan but you don't have to submit it for review unless requested by your regulatory authority. While you don't have to include the plan in your permit application or operating permit you must incorporate it by reference in your permit. [§§ 63.6(e)(3) and 63.850(c)]

- **Continuous parameter monitoring plan.** You must submit this plan to your regulatory authority for approval as part of the notification of compliance status. [§ 63.848(f)]

- **Monitoring device accuracy and calibration.** You must submit recommended accuracy requirements to your regulatory authority for approval as part of the notification of compliance status. You also must certify that all devices meet the accuracy requirements. You must calibrate each monitoring device according to the manufacturer's instructions. [§ 63.848(k)]

You also must provide certain written notifications and make one-time or periodic reports. These are listed in **Table 6-3. Chapter 8** gives additional information on each type of plan, notification, or report

How do I show compliance?

You can:

- Do a **design evaluation** according to the criteria in the rule [§ 63.847(g)(2)].

- Do a **performance test** according to the criteria in the rule [§ 63.847(g)(3)].

Chapter 7 describes the procedures you must follow for a design evaluation or a test.

Table 6.1 Monitoring Requirements for New Pitch Storage Tanks

If your emission point is	And you have chosen, as your overall compliance strategy, the . . .	And you are using the following control option . . .	Then you must monitor as described below . . .		According to these sections of the rule ...
New pitch storage tank	Performance standard	All	!	Install, operate, calibrate, and maintain a **continuous parameter monitoring system** to measure and record the parameter(s) to be monitored	§ 63.848(f)(2)
			!	Monitor parameters approved by your regulatory authority	§ 63.848(g)(1)
			!	Calibrate it according to manufacturer's instructions	§ 63.848(k)
			!	Visually inspect the exhaust stack of each control device on a daily basis for evidence of any visible emissions indicating abnormal operation. Record the results of each inspection	§ 63.848(g)
			!	If the monitoring device measures an operating parameter outside the established limit(s) or you observe visible emissions indicating abnormal operation,, initiate corrective action procedures in the startup, shutdown, and malfunction plan within 1 hour and take the necessary corrective actions to remedy the problem	§ 63.848(j)

:

Table 6.2 Recordkeeping Requirements for New Pitch Storage Tanks

You must keep these records for each new pitch storage tank . . .	According to these sections of the rule ...
Records required by § 63.10(b)	§ 63.850(e)(4)
! The occurrence and duration of each startup, shutdown, or malfunction of process equipment	
! The occurrence and duration of each malfunction of the air pollution control equipment	
! All maintenance performed on the air pollution control equipment	
! Actions taken during a startup, shutdown, or malfunction (including corrective action) when actions are different from the procedures in the startup, shutdown, and malfunction plan	
! All information needed to demonstrate conformance with the startup, shutdown, and malfunction plan (including corrective action) when all your actions are consistent with the procedures in the plan	
! Each period a continuous monitoring system is malfunctioning or inoperative	
! All required measurements needed to demonstrate compliance with the standard that support data you are required to report (including but not limited to, data from a continuous monitoring system)	
! All calibration checks, adjustments, and maintenance performed on a continuous monitoring system	
! Any information demonstrating whether an affected source is meeting the requirements for a waiver from recordkeeping or reporting requirements (if applicable)	
! All emission levels relative to the criterion for obtaining permission to use an alternative to the relative accuracy test (if applicable)	
Copy of startup, shutdown, and malfunction plan	§ 63.850(e)(4)(iii)
Records of the daily visual inspection of each control device for proper operation	§ 63.850(e)(4)(x)
Records documenting the corrective actions taken when the control device operating parameter limits were outside the limits	§ 63.850(e)(4)(xiii)

Table 6.3 Notifications and Reports for New Pitch Storage Tanks

Notifications		Reports	
!	Notification of applicability if your facility is an an area source and subsequently increase your emissions such that you are a major source subject to the rule	!	Startup, shutdown, and malfunction reports
!	Notification of applicability for an affected source if the startup date is before the effective date (10/7/97)	!	Semi-annual excess emissions report
!	Notification of applicability for an affected source if the affected source is new or reconstructed, the startup date is after the effective date (10/7/97), and an application for construction or reconstruction is not required	!	Annual compliance certification
!	If you construct or reconstruct after the effective date (10/7/97) and an application for approval of construction or reconstruction is required: Intention to construct or reconstruct Date construction or reconstruction began Anticipated date of startup Actual date of startup Application for approval or construction or reconstruction		
!	Notification of compliance status		

What test methods do I use for TF and POM?

You must sample for TF and POM emissions using EPA reference methods, an alternative method previously approved for your specific plant by EPA or your State agency, or an alternative method that you get approved by the regulatory agency based on showing it is equivalent to the reference method.

Table 7.1 Methods for Sampling for TF and POM

If the emission point is....	You may use one of these methods....
Stack for the anode bake furnace or potline primary control system	EPA Method 13A or 13B for TF and EPA Method 315 for POM, or An alternative method that EPA or the State had previously approved for your facility, or An alternative method you demonstrate (to the satisfaction of the applicable regulatory authority) is equivalent to the reference method
Potline roof monitor (with no wet roof scrubbers)	EPA Method 14 or 14A for TF and Method 315/Method 14 for POM, or An alternative method that EPA or the State had previously approved for your facility (an HF continuous emission monitoring system is an approved alternative for similar potlines), or An alternative method you demonstrate (to the satisfaction of the applicable regulatory authority) is equivalent to the reference method
Potline roof monitor (with wet roof scrubbers)	Sample using a method approved by the State agency that meets the intent of Method 14, **and** Analyze for TF using EPA Method 13A or 13B for TF and EPA Method 315 for POM, or An alternative method that EPA or the State had previously approved for your facility (an HF continuous emission monitoring system is an approved alternative for similar potlines), or An alternative method you demonstrate (to the satisfaction of the applicable regulatory authority) is equivalent to the reference method

How do I get approval to use an alternative test method?

There are two ways that you can use an alternative method rather than an EPA reference method:

- You have already demonstrated the equivalency of the alternative method and have received previous approval from EPA or the applicable regulatory authority to use it, or

- You perform simultaneous sampling with the reference method and the alternative method and show, to the satisfaction of the regulatory authority, that the two methods are equivalent.

What are my requirements for conducting a performance test?

You must follow the procedures you have outlined in your site-specific test plan. More information is given on the contents of this plan in **Chapter 8**, and an example outline of a plan is given in **Appendix C** .**Table 7.2** summarizes the rule's requirements for conducting a performance test for potlines, and **Table 7.3** presents the requirements for anode bake furnaces.

How do I sample if I have many stacks for a single control device or several control devices for a single process?

When a single control device, such as a dry alumina scrubber, has many stacks, you may develop procedures to ensure that at least three runs are performed annually by a **representative** sample of the stacks. The procedures must be approved by your State agency. Such procedures may include (but are not limited to) rotating the sampling among the stacks over some period of time, or sampling stacks representative of all of the stacks and measuring the volumetric flow rate in all of the stacks.

If you have multiple control devices on a single process, such as a potline or bake furnace, you must conduct at least **one run per control device** and at least three runs per year for the process. For example, if you have two control devices, you must conduct at least one run on one device and two runs on the other one. If you have four control devices, you must conduct one run per device for a total of four runs per year to meet the requirement of one test of the primary control system each year.

What alternatives are there for performance testing?

The alternatives you have for performance test monitoring are:

- reduced testing for similar potlines,

- reduced monitoring frequency, and

- representative sampling of the entire potline when you have a new, modified, or reconstructed potroom group.

These alternatives and criteria for approval are described in **Table 7.4**.

The provisions for **similar potlines** allow you to use EPA reference methods for one potline and to monitor the other similar potlines using alternative methods, such as an HF CEM. **Table 7.4** explains the criteria, which essentially require establishing a correlation between the alternative monitoring procedure and the reference method. If you choose to use an HF CEM for secondary emissions and manual sampling for the primary control system, you must develop a procedure or correlation that will ensure the contribution of both primary and secondary emissions are included in the total. If you use an HF CEM, remember that the emissions are reported on a monthly basis, so you must develop a monthly average for each month.

You can qualify for **reducing the sampling** of secondary (roof monitor) emissions of TF from monthly to quarterly by showing you are consistently below the applicable limit and have low variability in emissions. You must provide 24 consecutive months of sampling data that show the average TF emissions are less than 60 percent of the applicable limit and that no single monthly test exceeds 75 percent of the limit. Alternatively, you may perform a detailed statistical analysis to show low variability. The statistical procedure is described in ***Primary Aluminum: Statistical Analysis of Potline Fluoride Emissions and Alternative Sampling Frequency*** (EPA-450-86-012, October 1986). This document is available in the docket for this rule (Docket A-92-60, Docket Item II-A-10). You also can obtain the document by purchasing it from the National Technical Information Service, 5285 Port Royal Road, Springfield, VA 22161. If you exceed the TF limit after qualifying for reduced sampling frequency, you must return to monthly sampling for at least one year. Then you may again apply for reduced sampling based on the criteria described above.

If you have a new, modified, or reconstructed potroom group that would have been subject to the NSPS, you can perform **representative sampling of the entire potline** containing that group rather than sampling both the new potroom group and other potroom groups. Representativeness is based on showing that all of the potroom groups are essentially equivalent in terms of structure, operability, type of emissions, volume of emissions, and concentration of emissions.

How do I calculate my emissions when I am using emission averaging?

If you use emission averaging, emissions are calculated from the sum of emissions from all emission points to be averaged divided by the process production rate for all processes involved in averaging. For example, suppose you plan to use emission averaging for Potlines 1, 2, and 3. You measure TF emissions from the primary control system and roof monitor as 384, 192, and 360 lb/day for the three potlines. The aluminum production rate is 120, 149, and 192 tons/day for Potlines 1, 2, and 3, respectively. TF emissions for emission averaging are calculated in lb/ton:

$$\text{TF (lb/ton)} = (384 + 192 + 360)/(120 + 149 + 192) = 2.0 \text{ lb/ton.}$$

A similar procedure is used for emission averaging for bake furnaces except that the production (in the denominator) is based on green anode production.

How do I calculate my emission limits if I incorporate the NSPS into my subpart LL requirements?

You must calculate a lower and an upper emission limit. If you exceed the lower limit, you would not be in violation if you met the upper limit **and** you show that exemplary operation and maintenance procedures

were used with respect to the emission control equipment and that proper control equipment was operating during the performance test.

The lower limit is calculated from:

$$L_1 = f_1 \times L_{PG1} + (1-f_1) \times L_{PL}$$

where
L_1 = the lower TF emission limit (lb/ton);

f_1 = the fraction of the potline's total aluminum production capacity that is contained within all new, modified, and reconstructed potroom groups;

L_{PG1} = 1.9 lb/ton for prebake potlines and 2.0 lb/ton for Soderberg potlines; and

L_{PL} = the TF emission limit that would normally apply to the potline if subject only to subpart LL.

The upper limit is calculated from:

$$L_2 = f_1 \times L_{PG2} + (1-f_1) \times L_{PL}$$

where
L_2 = the upper TF emission limit (lb/ton); and

L_{PG1} = 2.5 lb/ton for prebake potlines and 2.6 lb/ton for Soderberg potlines.

How do I calculate my TF emissions if I incorporate the NSPS into my subpart LL requirements?

You have two choices:

- You may sample one section of the potline and use that result (in lb/ton) to determine compliance if you can show it is representative of the entire potline. Representativeness is based on showing that all of the potroom groups are essentially equivalent in terms of structure, operability, type of emissions, volume of emissions, and concentration of emissions.

- The second choice is to sample two sections of the potline, one section that represents the new, modified, or reconstructed potroom group and one section that represents the rest of the potline. The emissions rates are combined based on the relative amount of aluminum produced in each section:

$$E = f_1 \times E_{PG2} + (1-f_1) \times E_{PL}$$

where
E = the TF emission rate for the potline in lb/ton;

f_1 = the fraction of the potline's total aluminum production capacity that is contained within all new, modified, and reconstructed potroom groups;

E_{PG1} = the TF emission rate in lb/ton for all new, modified, and reconstructed potroom groups in the potline; and

E_{PL} = the TF emission rate in lb/ton for the balance of the potline.

What procedures do I use for new pitch storage tanks?

There are three options for demonstrating compliance for pitch storage tanks:

- Perform sampling for POM at the inlet and outlet of the control device using EPA Method 315 and show that the control efficiency is at least 95 percent, or

- Vent the pitch tank to the control device used for the paste production plant (if you are complying with the paste production plant requirements, then you are considered to be in compliance for the pitch storage tank), or

- Perform a design evaluation.

For a **design evaluation**, you must document that the control device achieves at least 95 percent control during the maximum filling rate, including the vapor flow rate and POM concentration under varying liquid level conditions. If vapors (other than fuels) from sources other than the pitch storage tank are received by the control device, the efficiency consideration must also include these other vapors. Other requirements depend on the type of control device:

- For **enclosed combustion devices** -- a minimum residence time of 0.5 seconds and a minimum temperature of 760 C. If a thermal incinerator that does not meet these conditions is used, you must specify the autoignition temperature of the HAP, vapor flow rate, combustion temperature, and residence time.

- For **carbon adsorbers**, include the affinity of the organic vapors for carbon, the amount of carbon in each bed, the number of beds, and the temperature, humidity and flow rate of the vapor. If the adsorber is regenerable, specify the desorption schedule, regeneration steam pressure or temperature, and flow rate of the regeneration stream. Include the pressure drop for vacuum desorption.

- For **condensers**, include the final vapor temperature, type of condenser, and design flow rate of the vapor.

Table 7.2 Performance Test Requirements for Potlines

If your emission point is	And you have chosen, as your overall compliance strategy, the . . .	Then you must follow these steps for each performance test . . .	According to these sections of the rule
Prebake or Soderberg potline	TF limit for individual potline (Option 1) **OR** TF emission averaging limit for multiple potlines (Option 2)	Follow the procedures in your site-specific test plan to measure and record the emission rate of secondary TF emissions for each potline	§ 63.847(d)(1)
		! Use Method 13A or 13B and Method 14 or 14A or an approved alternative method to measure the concentration of TF exiting the roof monitor. If your plant has wet roof scrubbers, use Method 13A or 13B or an approved alternative method to measure the concentration of TF from the stack or duct. See Chapter 7 for additional test method requirements if you have a VSS potline or a SWPB potline using wet roof scrubbers for secondary emission control.	§ 63.849(a)(4) § 63.849(a)(5) § 63.849(b)
		! You must do at least at least three runs during a one-month period	§ 63.847(d)(1)
		Follow the procedures in your site-specific test plan to measure and record the emission rate of TF exiting the outlet of the primary control system for each potline	§ 63.847(d)(1)
		! Use Method 13A or 13B or an approved alternative method to measure the concentration of TF from the stack or duct	§ 63.849(a)(5)
		! You must have at least three runs for the year for the primary control system.	§ 63.847(d)(1)
		! If you have done a performance test on the primary control system for a potline within one year (12 consecutive months) of your compliance date, you can use the results from that test instead of doing another test	§ 63.847(c)
		! If you have done more than one test of the primary control device for a potline during the previous 12 consecutive months, you must use the average of all runs performed during that period to determine the contribution from the primary control system	§ 63.847(d)(3)

Table 7.2 Performance Test Requirements for Potlines (cont'd)

If your emission point is	And you have chosen, as your overall compliance strategy, the . . .	Then you must follow these steps for each performance test . . .	According to these sections of the rule
Soderberg potline	POM limit for individual potline (Option 1) OR POM emission averaging limit for multiple potlines (Option 2)	Follow the procedures in your site-specific test plan to measure and record the emission rate of secondary POM emissions for each potline	§ 63.847(d)(2)
		! Use Method 315 and Method 14 or an approved alternative method to measure the concentration of POM exiting the roof monitor. If your plant has wet roof scrubbers, use Method 315 or an approved alternative method to measure the concentration of TF from the stack or duct. See Chapter 7 for additional test method requirements if you have a VSS potline or a SWPB potline using wet roof scrubbers for secondary emission control.	§ 63.849(a)(7) § 63.849(a)(6) § 63.849(b)
		! You must do at least at least three runs during a quarterly period (one run per month)	§ 63.847(d)(2)
		Follow the procedures in your site-specific test plan to measure and record the emission rate of POM exiting the outlet of the primary control system for each Soderberg potline	§ 63.847(d)(2)
		! Use Method 315 or an approved alternative method to measure the concentration of POM from the stack or duct	§ 63.849(a)(7)
		! You must have at least three runs for the year for the primary control system.	§ 63.847(d)(2)
		! If you have done a performance test on the primary control system for a potline within one year (12 consecutive months) of your compliance date, you can use the results from that test instead of doing another test	§ 63.847(c)
		! If you have done more than one test of the primary control device for a potline during the previous 12 consecutive months, you must use the average of all runs performed during that period to determine the contribution from the primary control system	§ 63.847(d)(3)

Table 7.2 Performance Test Requirements for Potlines (cont'd)

If your emission point is	And you have chosen, as your overall compliance strategy, the . . .	Then you must follow these steps for each performance test . . .	According to these sections of the rule
Existing Soderberg, CWPB2, or CWPB3 potline that adds a new potroom group or associated with a modified or reconstructed potroom group	Lower and upper TF limit	Follow the procedures in your site-specific test plan to measure and record the emission rate of TF secondary TF emissions and the emission rate of TF exiting the outlet of the primary control system for each new, modified, or reconstructed potroom group. Use the procedures, methods and equations in §§ 63.847, 63.848, and 63.849 (see instructions above for determining TF emissions for an individual potline)	§ 63.845(g)(1)
		Determine the TF emission rate for secondary emissions and the primary control device for each potroom group or section of a potroom group within the potline that is not a new, modified, or reconstructed potroom group. You can do this either or two ways:	§ 63.845(g)(2)
		! Determine the mass emission rate from at least one potroom group within the potline that is not a new, modified, or reconstructed potroom group using the methods, procedures, and equations in §§ 63.847, 63.848, and 63.849	§ 63.845(g)(2)(i)
		! Use the sampling results for the new, modified, or reconstructed potroom group to represent the entire potline provided the results are representative of the entire potline. To be representative, all the potroom groups associated with the potline must be substantially equivalent in structure, operability, and type, volume, and concentration of emissions.	§ 63.845(g)(2)(ii)
		OR	
		Instead of sampling each new, modified, or reconstructed potroom group and each potroom group or section of the potroom group that is not a new, modified, or recontructed potroom group, you can do representative sampling of the entire potline if your regulaltory authority approves your request	§ 63.845(g)(4)

Table 7.3 Performance Test Requirements for Anode Bake Furnaces

If your emission point is	And you have chosen, as your overall compliance strategy, the . . .	Then you must follow these steps for each performance test . . .	According to these sections of the rule ...
Existing anode bake furnace	TF limit for individual furnace (Option 1)	Follow the procedures in your site-specific test plan to measure and record the emission rate of TF emissions exiting the exhaust stack(s) of the primary control system for each furnace	§ 63.847(d)(4)
	OR	! Use Method 13A or 13B or an approved alternative method to measure the concentration of TF from the stack or duct	§ 63.849(a)(4) § 63.849(a)(5)
	TF emission averaging limit for multiple furnaces (Option 2)	! You must do at least at least three runs during a one calendar year period	§ 63.847(d)(4)
		! If you have done a performance test on the primary control system for a furnace within one year (12 consecutive months) of your compliance date, you can use the results from that test instead of doing another test	§ 63.849(c)
		! If you have done more than one test of the primary control device for a furnace during the previous 12 consecutive months, you must use the average of all runs performed during that period to determine the contribution from the primary control system	§ 63.847(d)(3)
Existing anode bake furnace	POM limit for individual potline (Option 1)	Follow the procedures in your site-specific test plan to measure and record the emission rate of POM emissions exiting the exhaust stack of the primary control system for each furnace	§ 63.847(d)(4)
	OR	! Use Method 315 or an approved alternative method to measure the concentration of POM from the stack or duct	§ 63.849(a)(7)
	POM emission averaging limit for multiple potlines (Option 2)	! You must have at least three runs for the year for the primary control system.	§ 63.847(d)(4)
		! If you have done a performance test on the primary control system for a furnace within one year (12 consecutive months) of your compliance date, you can use the results from that test instead of doing another test	§ 63.847(c)
		! If you have done more than one test of the primary control device for a furnace during the previous 12 consecutive months, you must use the average of all runs performed during that period to determine the contribution from the primary control system	§ 63.849(d)(3)
New or reconstructed furnace		Same as above	§ 63.847(d)(4)

Table 7.4 How Do I Qualify for a Monitoring Alternative?

If your emission point is	And you are required to monitor . . .	And you wish to request this type of monitoring alternative...	Then you must follow these steps to get an approved monitoring alternative . . .		According to these sections of the rule ...
Existing, new, or reconstructed potline	Monthly TF secondary emissions limit for individual potline (Option 1)	Similar potlines	**Criteria for approval:** the alternative monitoring method and alternative emission limit must achieve a level of emission control that is the same as or better than the level that would have otherwise been achieved by the applicable emission limit and monitoring method.		§ 63.848(d)
	Quarterly POM secondary emissions an individual potline **OR** Monthly TF secondary emissions for multiple existing potlines under an emissions averaging implementation plan Quarterly POM secondary emissions from multiple existing potlines under an emissions averaging implementation plan (Option 2)		(1)	Do a performance test using the HF continuous emission monitoring system or other alternative monitoring method for each similar potline simultaneously with the emission test done with the methods and procedures §§ 63.849(a) or 63.849(b) of the rule	§ 63.848(d)(1)
			!	TF emission estimates must account for or include gaseous emissions and can't be based on measurements of particulate matter or particulate fluoride alone	§ 63.848(d)(1)(i)
			!	If you are measuring TF and POM secondary emissions, the alternative monitoring method must meet or exceed Method 14 criteria.	§ 63.848(d)(1)(ii)
			!	An HF continuous emission monitoring system is an approved monitoring alternative for TF emissions	§ 63.848(d)(2)
			!	Do at least 9 simultaneous runs. Each run must represent a full operating cycle.	§ 63.848(d)(3)
			(2)	Calculate an alternative limit for the HF continuous emission monitoring system or alternative monitoring system:	§ 63.848(d)(4)
			!	Use the **highest value** for a run by the alternative monitoring system that does not exceed the applicable emission limit	§ 63.848(d)(4)(i)
				OR	
			!	**Correlate the results** of the two methods (the results using the test methods and procedures in the rule and the alternative monitoring system results) and calculate a limit for the alternative monitoring system that corresponds to the applicable emission limit	§ 63.848(d)(4)(ii)

Table 7.4 How Do I Qualify for a Monitoring Alternative? (cont'd)

If your emission point is	And you are required to monitor . . .	And you wish to request this type of monitoring alternative...	Then you must follow these steps to get an approved monitoring alternative . . .	According to these sections of the rule ...
Existing, new, or reconstructed potline	Monthly TF secondary emissions limit for individual potline (Option 1) **OR** Monthly TF secondary emissions for multiple existing potlines under an emissions averaging implementation plan	Reduced monitoring frequency	**Criteria for approval**: secondary emissions of TF have low variability during normal operations	§ 63.848(e)(1)
			! Provide 24 consecutive months of sampling to show the average TF secondary emissions are less than 60 percent of the applicable limit and that no monthly performance test in the 24 months of sampling exceeds 75 percent of the applicable limit.	§ 63.848(e)(1)(i)
			! If you have excess emissions:	§ 63.848(e)(4)
			(1) Return to monthly sampling for at least one year	§ 63.848(e)(4)(i)
			(2) To obtain approval for reduced sampling again, you must provide data showing the average of all tests done over the most recent 24-month period does not exceed 60 percent of the applicable limit and that no more than one monthly performance test in the most recent 24-month period is over 75 percent of the applicable limit	§ 63.848(e)(4)(ii)
			OR	
			! Provide data and a statistical analysis based on the approach used in ***Primary Aluminum: Statistical Analysis of Potline Fluoride Emissions and Alternative Sampling Frequency*** (EPA-450-86-012, October 1986). This document is available in the docket for this rule (Docket A-92-60, Docket Item II-A-10). You also can obtain the document by purchasing it from the National Technical Information Service, 5285 Port Royal Road, Springfield, VA 22161	§ 63.848(e)(1)(ii)
			! If you have excess emissions, immediately return to monthly sampling until your regulatory authority approves another request	§ 63.848(e)(5)

Table 7.4 How Do I Qualify for a Monitoring Alternative? (cont'd)

If your emission point is	And you are required to monitor . . .	And you wish to request this type of monitoring alternative...	Then you must follow these steps to get an approved monitoring alternative . . .	According to these sections of the rule ...
Existing Soderberg, CWPB2, or CWPB3 potline that adds a new potroom group or associated with a modified or reconstructed potroom group	Lower and upper TF limit	Representative sampling of entire potline	**Criteria for approval:** sampling equipment covers both the new, modified, or reconstructed potroom group and the balance of the potline	§ 63.845(g)(4)
			! Coverage for new, modified, or reconstructed potroom group must meet criteria specified in reference methods (see § 63.849)	§ 63.845(g)(4)
			! Determine emissions for the potline using procedures, equations, and test methods in rule (see §§ 63.847, 63.848, and 63.849)	§ 63.845(g)(4)

What is a site-specific test plan?

A site-specific test plan lays out the procedures you will use for conducting the intitial performance test and subsequent performance tests for potlines or anode bake furnaces. Make sure you read the requirements for site-specific test plans in 40 CFR 63.7 of the NESHAP General Provisions.

The NESHAP General Provisions require that you submit your notification of performance test at least **60 calendar days before the performance test** is scheduled to begin to allow your regulatory authority (upon request) to review and approve the plan and to have an observer present during the test. You must prepare a plan but you don't have to submit it for approval unless requested by your regulatory authority.

Key elements in the plan include:

- **!** A test plan summary (include test methods and test schedule)
- **!** Data quality objectives (pretest expectations of precision, accuracy, and completeness)
- **!** Internal QA program consisting, at a minimum, of activities to assess data precision (replicate sample analysis)
- **!** External QA program based on blind audit samples and potential one-site system audits.

The rule also requires the plan to include:

- **!** Procedures to ensure that at least **three runs are done annually for the primary control system** for each potline and/or furnace.
- **!** Procedures to ensure that at least **three runs are done annually for a representative number of stacks** satisfactory to your regulatory authority if your potline has a single control device exhausted through multiple stacks
- **!** Procedures to ensure that at least **one run is done annually for each control device by a representative sample of the stacks** satisfactory to your regulatory authority if your potline has multiple control devices
- **!** Procedures for establishing the **frequency of testing secondary emissions** to ensure that you do at least one run before the 15th of the month, at least one run after the 15th, and that you have at least 6 days between two of the runs. **Figure 8.1** illustrates some of the options for meeting this requirement.
- **!** Procedures for **rotating sampling** among the scrubbers or other procedures to obtain representative sampling satisfactory to your regulatory authority if your plant has roof scrubbers.

- **!** Procedures to ensure that **one fan or one scrubber per potline** is sampled for each run if you have a VSS1 potline

- **!** Procedures to ensure that the **average of the sampling results** for two fans (or two scrubbers) per potline is used for each run if your have a SWPB potline

- **!** Procedures for sampling **single stacks** associated with multiple anode bake furnaces.

We've included an example outline of a site-specific test plan in **Appendix C**.

Figure 8.1 Potline Roof Monitor Sampling Options

One run before the 15th, one run after the 15th, six days between <u>two of the runs.</u>

Date:	Maximum samples, least risk	Minimum time between runs	Maximum time between runs	Mininmum samples, greatest risk
1				
2				
3				
4				
5				
6				
7				
8				
9				
10				
11				
12				
13				
14				
15				
16				
17				
18				
19				
20				
21				
22				
23				
24				
25				
26				
27				
28				
29				
30				

What is a continuous parameter monitoring plan?

As part of your notification of compliance status report, you must submit a written plan to your regulatory authority for approval that contains:

- A description of parameters to be monitored for each control device
- The proposed upper and/or lower operating limits for each parameter and the criteria used to select the limit. For a potline or anode bake furnace, the limits can be based on the values recorded during each run of the initial performance test and from historical data from previous tests (if the tests were done by the methods required in the rule)
- Monitoring frequency
- Recommended accuracy requirement for measuring each proposed parameter. You also must certify that each monitoring device meets the accuracy requirements. You can include the accuracy recommendations required by § 63.848(k) separately or as part of this plan.
- For a new pitch storage tank (where you must select the parameters to be monitored), the parameters to be monitored, an explanation of the criteria used to select that parameter(s) how the proposed parameter ensures proper operation and maintenance (i.e., relationship to , emission control system performance and emissions), and the frequency of monitoring
- For a paste production plant, the basis or rationale for selecting parameters to be monitored and the associated operating limits for the emission control device.

What is an implementation plan for emission averaging?

If you plan to comply by emission averaging, you must do an Implementation Plan and submit it to the regulatory authority for approval. The plan is required at least 6 months before emission averaging will be used. Section 63.846 of the rule details the requirements for the content of the plan and the procedures for review and approval of the plan. The required components are:

- Identify all sources in the average
- Identify the TF or POM limit in the average
- Identify the specific control technology or pollution prevention measure to be used for each affected source and the date of installation or application
- Site-specific test plan
- Control device or system operating parameters to be monitored and description of how the operating limits will be determined (Continuous Parameter Monitoring Plan)
- Demonstrate that compliance will be achieved under representative operating conditions

If you want to monitor alternative operating parameters, include:

- The parameters to be monitored and the criteria to select the parameters
- The methods and procedures that demonstrate that the proposed parameter indicates proper control device operation and the frequency is sufficient to represent proper control device operating condition, and the frequency and content of monitoring, reporting, and recordkeeping

What is an engineering plan?

This plan may be required by your regulatory authority as part of a **notification of compliance approach**. The plan describes the techniques you will use to address the capture efficiency of the reduction cells for gaseous HAPs in compliance with the emission limits in §§ 63.843, 63.844, and 63.846 of the rule.

What is a startup, shutdown, and malfunction plan?

You must develop and implement a written plan that describes the procedures to be followed and the corrective actions to be taken when a potline (or potroom), baking furnace, paste production plant, new pitch storage tank, or associated emission control equipment experience a startup, shutdown, or malfunction. The purpose of this plan is to ensure that you correct a malfunction as soon as practicable whenever it occurs.

What is a *Malfunction?*

...any sudden, infrequent, and not reasonably preventable failure of air pollution control equipment, process equipment, or a process to operate in a normal or usual manner. Failures that are caused in part by poor maintenance or careless operation are not malfunctions. [§ 63.2]

You **don't** have to submit the plan with the permit application or include it in your operating permit . Your permitting authority may review the plan on request. You must keep the current version available for review and inspection by your regulatory authority. (Previous versions of revised plants must be retained for 5 years and kept available for inspection). The plan is to be revised within 45 days if an event occurs that the current plan fails to address or expeditiously correct the situation. The revision is to include provisions for addressing this type of situation in the event of future occurrences.

The plan may be a stand-alone document or take the form of a standard operating procedures manual provided it covers startup, shutdown, and malfunction events and corrective action procedures. The plan must contain:

- Detailed procedures for operating and maintaining the affected source during periods of startup, shutdown, and malfunction

- Program of corrective action for malfunctioning process and control systems used to comply with the rule

- Procedures, including corrective actions, to be taken if a monitoring device measures an operating parameter value outside the limits, if visible emissions from an exhaust stack are indicating abnormal operation of a control device are observed during an inspection, or if a problem is detected during a daily inspection of a wet roof scrubber for potline secondary emission control. In these cases, you must initiate corrective action within 1 hour.

- Procedures for documenting each event and confirming whether your actions conform with the plan.

During a startup, shutdown, or malfunction (or the specific situations listed in the rule) you must keep records of each event to document that your actions were consistent with the plan requirements.

What do I have to report and when?

Up to **six** types of notifications and **three** types of reports may be required. **Table 8.1** lists types of notifications and reports that may be required, the due date, and where you can get additional information. **Table 8.2** describes the information you must include in each type of notification and report.

What alternatives are available and how to I request one?

Two monitoring alternatives are available for potlines. These are:

- Monitoring TF or POM secondary emissions from a potline using the test methods and procedures in the rule and emissions from **similar potlines** using an alternative method, such as an HF continuous emission monitoring system. *Potlines are similar if their structure, operability, type of emissions, volume of emissions, and concentration of emissions are substantially equivalent.* You must demonstrate that the level of emission control performance for the similar potline is the same or better than would have otherwise been achieved using the applicable emission limit and test methods in the rule. Using test results, you then establish an alternative emission limit for the HF continuous emission monitoring system (an approved alternative) or other alternative monitoring system [§ 63.848(d)]

- **Reduced sampling frequency** for TF secondary emissions from a potline from monthly to quarterly. For this alternative, you must demonstrate that *secondary emissions of TF have low variability* during normal operations. If you must meet the new source performance standards and already have an approved alternative for reduced sampling frequency under § 60.194, you do not need to request another. You are deemed to have approval under this rule. [§ 63.848(e)]

Two alternatives are available if you have a Soderberg, CWPB2, or CWPB3 potline that must meet the new source performance standard for potroom groups. You can:

- Instead of sampling each new, modified, or reconstructed potroom group and each potroom group or section of the potroom group that is not a new, modified, or recontructed potroom

group, you can do **representative sampling** of TF emissions of the entire potline The sampling equipment must cover both the new, modified, or reconstructed potroom group and the balance of the potline. The coverage for the new, modified, or reconstructed potroom group must meet the criteria specified for the reference methods in § 63.849 of the rule. [§ 63.845(g)(4)]

- **!** If your potline passes the TF performance test but fails to meet the 10-percent opacity limit, you can request an **alternative opacity limit**. If you meet the requirements in the rule, the regulatory authority will establish an opacity standard for the potroom group that can be met by the potroom group at all times during which the potline is meeting the TF limit. The alternative limit can't be more than 20 percent opacity. [§ 63.845(i)]

If you have a paste production plant, you can request an **alternative control device** if you do not want to use a dry coke scrubber. In your request, you must show that the alternative control device meets the specified emission levels by sampling POM using Method 315. If you use an alternative control device, you will need to request your regulatory authority to include the recommended parameters to be monitored in your operating permit and provide a Continuous Parameter Monitoring Plan to establish operating limits. [§ 63.843(b)(3)]

The rule also includes provisions for all affected sources that allow you to:

- **!** Monitor **alternative control device operating parameters.** Include the information required for the *Continuous Parameter Monitoring Plan* in your request [§ 63.848(l)].

- **!** Use an **alternative test method** to measure TF or POM emissions. You can do this if you have already demonstrated that the method is equivalent for your plan and received approval or if you use the procedures in the rule to demonstrate the alternative meets certain criteria [§ 63.849(e)]

- **!** Request to change **parametric monitoring limits**. The revised upper and/or lower limit must be based on historical data or other information. [§ 63.847(h)(2)]

Your regulatory authority must approve your written request before you can use it. **Chapter 7** contains additional information on the technical procedures to use in making a request for monitoring similar potlines or seeking a reduced sampling frequency.

Can I change the date my reports are due?

Under the NESHAP General Provisions [see 40 CFR 63.10(a)(5)], you may request a change in the date you submit your reports. You and your EPA Regional Office or State, local, or Tribal agency for air pollution control (from now on referred to as "State") must mutually agree to the change and the change can't affect the f**requency** that you report. For example, you can request that semi-annual reports that might be due in June and December be changed to another time frame, such as May and November or one that coincides with your title V operating permit notifications. This doesn't change your reporting frequency since you're still submitting your semi-annual reports twice per year.

Changes to reporting dates can begin 1 year after the compliance date. Reports due before that time can't be changed and must be reported by the date shown in Table **8.1**. Contact your State for more information.

Where do I send my reports?

The NESHAP General Provisions [40 CFR 63.9(a) and 40 CFR 63.10(a)] require you to submit plans, notifications, reports, and requests to your State **or** your EPA Regional Office **or** both (dual reporting). Whom you send your information to depends on whether your State has been granted authority to implement the Primary Aluminum NESHAP.

You'll need to submit reports in **one** of the following ways:

- **!** to your EPA Regional Office **if** your State **has not** been delegated the authority to implement and enforce the rule

- **!** to your State with a copy to your EPA Regional Office, **if** your State **has** been granted delegation **and** we haven't waived the dual reporting requirement

- **!** to your State **if** it's been granted delegation **and** we've waived the dual reporting requirement.

Not all State agencies have been granted delegation. Also, as of this publication, our Region I, III, VIII, and X offices haven't waived the dual reporting requirement under 40 CFR 63.9 and 40 CFR 63.10. This means that if your plant is in one of these regions, you'll need to submit your reports to your State, local or tribal agency **and** the EPA Regional Office. You'll find a list of our Regional Offices and their addresses in **Chapter 10**. Check with your EPA Regional Office or State for the latest information on submitting reports.

We delegated authority for all aspects of the rule to your State agency. This means that you'll submit your requests for alternatives to your State. You can do this by using your notification of compliance status, your application for construction or reconstruction, or at any other time as long as the request includes all the information required by the rule. Your request must be approved as described in 40 CFR 63.6(g) before your can use the alternative limit, method, or monitoring program.

Is there a time limit for the regulatory authority to approve or deny my request?

Section 63.851 contains time limits that the regulatory authority must meet when you submit certain types of plans or requests. These are:

- **!** The site-specific test plan [63.847(b)]

- **!** Request to change control device operating parameter limits [§ 63.848(h)(2)

- **!** Request for reduced sampling frequency [§ 63.848(e)]

- **!** Request for representative sampling [§ 63.845(g)(4)]

- Request for alternative test method [§ 63.849(e)(2)]

Your regulatory authority must notify you in writing whether your submission is **complete or incomplete.** This must be done within **30** days of receiving your orginal submission or within 30 days of receiving any additional material you submit. If it is not complete, the regulatory authority must specify the information needed and give you 30 additional days to provide the information. The regulatory authority also must notify you in writing of approval or intent to deny approval, or if additional time is needed to review the submission within **60** days of receiving a complete submission.

Are example reporting forms available?

We've included example forms for the most common reports the rule requires. You'll find the following example reports in this chapter:

- Notification of applicability
- Application for approval of construction or reconstruction
- Notification of compliance status
- Annual compliance certification

You may use these forms for reporting, but you **don't** have to use them. You may want to check with your State agency to make sure they don't have their own forms, **or** if you do use these forms, check first to see they meet your State requirements.

Table 8.1 Due Dates for Notifications and Reports

You must submit this type of notification or report. . .	If you have . . .	Then submit the report before . . .	See the NESHAP General Provisions and the rule for more information . . . . .
Initial notification of applicability	An *area source* not currently subject to the rule that subsequently increases its emissions so that it becomes a major source that is subject to the rule	120 days after you become subject to the standard	§ 63.9(b)(1)(ii) and § 63.850(a)(1)
	An *existing affected source* (i.e., the startup date was before 10/7/97) . .	120 days after the effective date	§ 63.9(b)(2) and § 63.850(a)(2)
	A *new or reconstructed affected source* where the startup date is after 10/7/97 and an application for approval of construction or reconstruction is **not** required [§ 63.9(b)(3)]	120 days after initial startup	§ 63.9(b)(3) and § 63.850(a)(3)
Notifications of construction or reconstruction	A new or reconstructed major affected source where the startup date is after 10/7/97 and an application for approval of construction or reconstruction **is** required		
	Intent to construct or reconstruct	Before construction or reconstruction (submit with application for approval of constuction or reconstruction)	§ 63.9(b)(4)(i) and § 63.850(a)(4)
	Date construction or reconstruction commenced	If construction or reconstruction commenced before **10/7/97** *(effective date)*, submit with application for approval of construction or reconstruction	§ 63.9(b)(4)(ii) and § 63.850(a)(4)
		If construction or reconstruction commenced after **10/7/97** *(effective date)*, **30** days after date construction or reconstruction commenced	§ 63.9(b)(4)(iii) and § 63.850(a)(4)
	Anticipated date of startup	**30 to 60** days before the anticipated date	§ 63.9(b)(4)(iv) and § 63.850(a)(4)
	Actual date of startup	15 days after startup	§ 63.9(b)(4)(v) and § 63.850(a)(4)

Table 8.1 Due Dates for Notifications and Reports (cont'd)

You must submit this type of notification or report. . .	If you have . . .	Then submit the report before . . .	See the NESHAP General Provisions and the rule for more information . . . . .
	Application for approval of construction or reconstruction, if you construct or reconstruct after **10/7/97** *(effective date)*	As soon as practicable before reconstruction is planned to start but no sooner than **10/7/97** *(effective date)*	§63.5(d)
	Application for approval of construction or reconstruction, if construction or reconstruction started before **10/7/97** *(effective date)*, but, your initial startup was after **10/7/97** *(effective date)* . . .	As soon as practicable before reconstruction is planned to start but no later than *60 days after the effective date*	§63.5(d)
Notification of potroom group component replacement	An existing potroom group	As soon as practicable before before construction but no later than *60 days before construction begins*	§ 63.845(a)(2)(ii)
Notification of initial performance test	An existing, new, or reconstructed affected source	At least 60 days before the test is scheduled	§ 63.9(e) and § 63.850(a)(5)
Notification of compliance status	An existing, new, or reconstructed affected source	*60 days after the performance test*	§ 63.9(h) and § 63.850(a)(6)
Notification of intent to use HF continuous emission monitoring system	An existing, new, or reconstructed affected source	Submit with notification of compliance status (180 days after the effective date)	§ 63.850(a)(7)
Notification of compliance approach	If requested by your regulatory authority for an existing, new, or reconstructed potline	Submit Engineering Plan with notitication of compliance status (180 days after the effective date)	83.850(a)(8)

Table 8.1 Due Dates for Notifications and Reports (cont'd)

You must submit this type of notification or report. . .	If you have . . .	Then submit the report before . . .	See the NESHAP General Provisions and the rule for more information . . . . .
Annual compliance certification	An existing, new, or reconstructed affected source	Annually - can submit with semi-annual excess emissions report	Title V of the Act
Excess emissions report	*Compliance period is for 180 days unless quarterly reports are required as a result of excess emissions*	30 days after each 180-day period	§ 63.10(e)(3) and § 63.850(d)
Potroom group excess emissions report	A new, modified, or reconstructed potroom group	30 days after any performance test over limits	§ 63.845(f)
Annual performance test report	An existing, new, or reconstructed potline or anode bake furnace	Annually - can submit with semi-annual excess emissions report	§ 63.850(c)
Startup, shutdown, and malfunction report	An existing, new, or reconstructed affected source or associated emission control system if an action taken during a startup, shutdown, or malfunction is not consistent with the startup, shutdown, and malfunction plan	Telephone call or fax within 2 working days after you begin the actions that were inconsistent with the plan and follow with a report within 7 working days after the end of the event	§ 63.6(e)(3)(iv) and § 63.850(c)(2)
	An existing, new, or reconstructed affected source or associated emission control system if an action taken during a startup, shutdown, or malfunction is consistent with the startup, shutdown, and malfunction plan	30 days after the end of each 180-day period (can be submitted with semi-annual excess emissions report)	§ 63.10(d)(5)(i) and § 63.850(c)(2)

Table 8.2 Reporting Requirements

If you are submitting this type of notification or report. . .	Then include the following information . . .	according to this section of the NESHAP general provisions or the rule
Initial notification of applicability	Name and address of owner or operator. Address (physical location) of the facility. Identify the standard you're subject to. Compliance date. Brief description of nature, size, design, and method of operation. Identify each point of emission for each hazardous air pollutant. Statement of whether you're a major or area source.	§ 63.850(a)(1)-(3) and § 63.9(b)
Application for Approval of Construction or Reconstruction	Applicant's name and address. Notification of intent to construct or reconstruct. Address (physical location) of the facility. Identify the standard you're subject to. Date that you expect to start construction or reconstruction. Date that you expect to finish construction or reconstruction. Date you expect to start operating (initial startup). Type and amount of HAP you're emitting or expect to emit. For construction, description of proposed nature, size, design, method of operation and emission controls and other information under *§63.5(d)(2).* For reconstruction, brief description of the facility, parts to be replaced and emission controls and other information under *§63.5(d)(3).*	§ 63.850(a)(4) and § 63.5(d)
Notification of potroom group component replacement	Name and address of owner or operator Location of the existing potroom group Brief description of the existing potroom group and the components that are to be replaced Description of the existing air pollution control equipment and the proposed air pollution control equipment An estimate of the fixed capital cost of the replacements and of constructing a comparable entirely new potroom group The estimated life of the existing potroom group after the replacements Discussion of any economic or technical limitations the potroom group may have in complying with the applicable standards of performance after the proposed replacement	§ 63.845(a)(2)(ii)

Table 8.2 Reporting Requirements (cont'd)

If you are submitting this type of notification or report. . .	Then include the following information . . .	according to this section of the NESHAP general provisions or the rule
Notification of initial performance test	Name and address of owner or operator Address (physical location) of the facility. Identify the standard you're subject to Identify affected source to be tested Anticipated date of test for each affected source Test methods to be used for pollutants to be tested Have you prepared a site-specific test plan? (Yes or no)	§ 63.850(a)(5) and § 63.9(e)
Notification of Compliance Status	Name and address of owner or operator Address (physical location) of the facility. Identify the standard you're subject to. List each affected source and control device or system Methods used to determine compliance Results of each initial performance test for potlines and anode bake furnaces Design evaluation or performance test results for new pitch storage tank Methods to be used to ensure continuing compliance, including a description of monitoring, reporting, and test methods Type and quantity of hazardous air pollutants emitted by the affected source Statement that you are a major or area source Continuous Parameter Monitoring Plan Engineering Plan (if requested) Certification of compliance	§ 63.850(a)(6) and § 63.9(h)
Notification of intent to use an HF continuous emission monitoring system	Name and address of owner or operator. Address (physical location) of the facility. Identify the standard you're subject to Identify the specific potline or potline group that will use the HF continuous emission monitoring system	§ 63.850(a)(7)

Table 8.2 Reporting Requirements (cont'd)

If you are submitting this type of notification or report. . .	Then include the following information . . .	according to this section of the NESHAP general provisions or the rule
Notification of compliance approach	Name and address of owner or operator. Address (physical location) of the facility. Identify the standard you're subject to Engineering Plan	§ 63.850(a)(8)
Performance test reports	Name and address of owner or operator. Address (physical location) of the facility. Identify the standard you're subject to Results of all performance tests conducted during the year for each affected source	§ 63.850(b)
Startup, shutdown, and malfunction report (required if actions during a startup, shutdown, or malfunction are not consistent with startup, shutdown, and malfunction plan)	**By telephone or fax within two working days:** Identity of the affected source Each of the actions (including corrective actions) that were taken during the startup, shutdown, or malfunction **Written followup within seven working days:** Name, title, and signature of owner or operator or other responsible official who is certifying accuracy of report Explanation of circumstances of event Reasons for not following startup, shutdown, and malfunction plan Whether any excess emissions or parameter monitoring exceedances are believed to have occurred	§ 63.850(c)(2) and § 63.6(e)(3)(iv) and § 63.10(d)(5)(ii)
Startup, shutdown, and malfunction report (semi-annual)	Name, title, and signature of the owner or operator or other responsible official who is certifying accuracy of the report The affected source or emission control system that experienced the startup, shutdown, or mafunction The date and time of the startup, shutdown, or malfunction Statement that actions taken during the startup, shutdown, or malfunction were consistent with the procedures in the startup, shutdown, and malfunction plan (may be submitted as part of the excess emissions report)	§ 63.850(c)(2) and § 63.10(d)(5)(i)

Table 8.2 Reporting Requirements (cont'd)

If you are submitting this type of notification or report. . .	Then include the following information . . .	according to this section of the NESHAP general provisions or the rule
Excess emissions summary report	If the total duration of excess emissions or parameter exceedances for the reporting period is less than 1 percent of the total operating time for the reporting period and the continuous monitoring system (continuous parameter monitoring system or a continuous emission monitoring system) downtime for the reporting period is less than 5 percent of the total operating time for the reporting period, submit one summary report for each HAP monitored that includes: Company name and address of the affected source Identification of each HAP monitored at the affected source Beginning and end dates of the reporting period Brief description of the process units Emission and control device/process operating parameter limits Monitoring equipment manufacture(r) and model numbers(s) Date of the latest continuous monitoring system certification or audit (if applicable) Total operating time of the affected source during the reporting period Emission data summary (or similar summary if you monitor process or control system parameters). Include the total duration of excess emissions during the reporting period (in hours for gases), the total duration of excess emissions expressed as a percentage of the total source operating time during the reporting period, and a breakdown of the total duration of excess emissions during the reporting period into those that are due to startup, shutdown, control equipment problems, process problems, other known causes, and other unknown causes Continuous monitoring system performance summary (or similar summary if you monitor process or control system parameters). Include total continous momitoring system downtime during the reporting period (recorded in hours for gases), the total duration of CMS downtime expressed as a percent of the total source operating time during that reporting period, and a breakdown of the total CMS downtime during the reporting period into periods that are due to monitoring equipment malfunctions, nonmonitoring equipment malfunctions, quality asssurance/quality control calibrations, other known causes, and other unknown causes A description of any changes in CMS, processes, or controls since the last reporting period Name, title, and signature of the responsible official who is certifying the accuracy of the report	§ 63.850(d) and § 63.10(e)(3)(vi)

If you are submitting this type of notification or report. . .	Then include the following information . . .	according to this section of the NESHAP general provisions or the rule
Excess emissions full report	If the total duration of excess emissions or parameter exceedances for the reporting period is 1 percent or more of the total operating time for the reporting period and the continuous monitoring system (continuous parameter monitoring system ora continuous emission monitoring system) downtime for the reporting period is 5 percent or more of the total operating time for the reporting period, submit one summary report for each HAP monitored that includes:	§ 63.850(d) and § 63.10(e)(3)(v)
	Name, title, and signature of the responsible official who is certifying the accuracy of the report	
	The date and time identifying each period during which the continuous monitoring system was inoperative except for zero (low level) and high-level checks	§ 63.10(c)(5)-(13)
	The date and time identifying each period during which the continuous monitoring system was out of control [see § 63.8(c)(7)]	
	The date and time of each period of excess emissions or parameter monitoring exceedance (include the time it began and ended) that occurs during a period of startup, shutdown or malfunction of an affected source	
	The date and time of each period of excess emissions or parameter monitoring exceedance (include the time it began and ended) that ocurred during a period other than a startup, shutdown, or malfunction of an affected source	
	The nature and cause of any malfunction (if known)	
	The corrective action take or preventative measured adopted	
	The nature or the repairs or adjustments to the continuous monitoring system that was inoperative or out of control	
	The total process operating time during the reporting period	
	All information concerning an out of control period for a continuous monitoring system, including start and end dates and hours and a description of the corrective actions taken	§ 63.8(c)(7)-(8)
Potroom group excess emissions report	Name of owner or operator Identification of potline associated with the new, modified, or reconstructed potroom group Performance test results that fall between the lower and upper limit for TF emissions Identification of the control devices online and their operating condition during the test Operation and maintenance procedures followed during the test Explanation for the excess emissions	§ 63.845(f)
Annual Compliance Certification	Statement that your facility complies with each applicable requirement of the rule.	40 CFR Parts 70 and 71

Example
Initial Notification Report

This is a sample notification form that you can use to comply with 40 CFR 63.850(a).

Applicable Rule: 40 CFR Part 63, Subpart LL - National Emission Standards for Hazardous Air Emissions for Primary Aluminum Reduction Plants. Initial notification is being made in accordance with §63.850(a).

1. Print or type the following information for each plant in which you produce primary aluminum [§63.9(b)(2)(i)-(ii)] :

   Owner/Operator/Title_____

   Street Address_____

   City _____ State _____ Zip Code_____

   Plant Name_____

   Plant Contact/Title_____

   Plant Contact Phone Number *(optional)*_____

   Plant Address (if different than owner/operator's)_____

   Street Address_____

   City _____ State _____ Zip Code: _____

2. Show your anticipated compliance date [§63.9(b)(2)(iii)]:

   _____ (Insert compliance date)
   Upon startup Anticipated startup date _____

3. Check which affected source(s) (as defined by 40 CFR 63.842) exist at your plant *(optional):*

   Potline
   Anode bake furnace
   Paste production plant
   New pitch storage tank

4. Briefly describe your sources nature, size, design, and method of operation, including its designed operating capacity. [§63.9(b)(2)(iv)]:

   _____

   _____

   _____

   _____

   _____

_____

Example Initial Notification Report (Cont'd)

5. Identify each point of emission for each Hazardous Air Pollutant (HAP). If you can't do this definitively yet, do a preliminary identification. If you need more lines, copy this page [§63.9(b)(2)(iv)].

   Please indicate if the information below is: Definitive Preliminary

Source ID	Source Location	Source Description	Operation Performed

6. My plant is a major source of Hazardous Air Pollutants (HAPs) Yes No

   NOTE: Only major sources of HAPs are regulated under this rule [§63.9(b)(2)(v)]. If you are not a major source, you are not subject to the rule and don't need to submit this initial notification. You should, however, keep documentation on how you determined you were an area source and maintain those records on file at your plant.

   A major source is a facility that may emit more than 10 tons per year of any one hazardous air pollutant (HAP) or 25 tons per year of multiple HAPs. All other sources are area sources. Whether a source is a major or area source depends on all HAP emission-points inside the plant's fenceline, not just the primary aluminum production facility.

End of Initial Notification Form

Example
Application for Approval of Construction or Reconstruction

This is a sample notification form that you can use to comply with 40 CFR 63.5(d).

Applicable Rule: 40 CFR Part 63, Subpart LL - National Emission Standards for Hazardous Air Emissions for Primary Aluminum Reduction Plants. Notification is being made in accordance with §63.5(d) [§64.5(d)(1)(ii)(D)]

Description: Your Application for Approval of Construction or Reconstruction falls under the General Provisions, §63.5(d). This section requires anyone constructing or reconstructing a major source after the effective date of a standard (in this case **10/7/97**) to obtain written approval to construct or reconstruct the source.

By this we mean, approval is required if you do **any** one of the following:

- construct a new major affected source
- reconstruct a major affected source
- reconstruct a source that becomes a major affected source

This means that if you construct a new source **or** reconstruct an existing source that is subject to the rule **and** that source a major source of HAPs, you will need to submit an Application for Approval of Construction or Reconstruction. You can find a definition of construction and reconstruction in the General Provisions, §63.2.

Use a separate form for each construction or reconstruction you are planning.

1. Print or type the following information for each affected source you're constructing or reconstructing [§64.5(d)(1)(ii)(A), (C)]:

Owner/Operator/Title _____

Street Address_____

City _____ State _____ Zip Code:_____

Plant Name *(optional)*_____

Plant Contact/Title *(optional)*_____

Plant Contact Phone Number *(optional)* _____

Plant Address (if different than owner/operator's) _____

Street Address _____

City _____ State _____ Zip Code:_____

Example
Application for Approval of Construction or Reconstruction (cont'd)

2. I intend to *(check only **one**, use a separate sheet of paper for each separate construction or reconstruction)* [§64.5(d)(1)(ii)(B)]:

   construct a new major affected source
   reconstruct a major affected source
   reconstruct a source that has become a major affected source

3. Describe the type of source you are constructing or reconstructing (optional):

   _____
   _____
   _____
   _____

4. I expect to begin construction or reconstruction on _____ (mm/dd/yy) [§64.5(d)(1)(ii)(E)]
   I expect to finish construction or reconstruction on _____ (mm/dd/yy) [§64.5(d)(1)(ii)(F)]
   I expect to startup on _____ (mm/dd/yy) [§64.5(d)(1)(ii)(G)]

5. Complete this section **only** if you plan on **constructing** a new major affected source. All others go to 6 [§64.5(d)(2)].

   (a) Describe the size and design capacity of the source you're constructing and at what capacity you intend to operate:

   _____
   _____
   _____
   _____

   (b) Identify the type and quantity of Hazardous Air Pollutants (HAPs) emitting after the construction, the pollution control equipment you intend on using, if any, and it's control efficiency. If you can't do this definitively, do a preliminary identification.

   Please indicate if the information below is: Definitive Preliminary

Example
Application for Approval of Construction or Reconstruction (cont'd)

Note: If you do a preliminary identification, you must submit actual data as soon as practical after it becomes available, but, no later than your notification of compliance status.

Source ID: _____

Emission Point ID (if applicable)	**HAP(s) emitted**	**Emissions (____units[1])**	**Air Pollution Control Device** (if applicable)	**Control Efficiency of Control Device (% efficiency)**

[1] use the same units, lb/ton or percent reductions that are required in the subpart

(c) Include with your submittal any technical information such as calculations you made to determine your estimated emissions.

6. Complete this section **only** if you plan on **reconstructing** an existing major affected source or reconstructing a source that becomes a major affected source after reconstruction. All others go to 7 [§64.5(d)(3)].

(a) Describe they type of components that you're replacing:

_____

_____

_____

(b) Identify the type and quantity of HAPs emitting after the reconstruction, the pollution control equipment you currently use and intend on using, if any, and it's control efficiency. If you can't do this definitively, do a preliminary identification.

Please indicate if the information below is: Definitive Preliminary

Example
Application for Approval of Construction or Reconstruction (cont'd)

Note: If you do a preliminary identification, you must submit actual data as soon as practical after it becomes available, but, no later than your notification of compliance status.

Source ID: _____

Emission Point ID (if applicable)	**HAP(s) emitted**	**Emissions (____units[1])**	**Air Pollution Control Device Currently Used** (if applicable)	**Planned Air Pollution Control Device** (if applicable)	**Control Efficiency of Control Device (% efficiency)**

[1] use the same units, lb/ton or percent reductions that are required in the subpart

(c) Include with your submittal any technical information such as calculations you made to determine your estimated emissions.

(d) A discussion of any economic or technical limits you'll have in complying with this subpart after reconstruction. If you **don't** plan on having any economic or technical limits after reconstruction, go to 7.

(i) Discuss what your economic or technical limits will be, how they effect your compliance under this subpart, what subparts will be effected, and what alternate methods of compliance you plan on using:

_____

_____

_____

(ii) My estimated fixed capital cost to reconstruct the affected source is : $ _____.00

Example

Application for Approval of Construction or Reconstruction (cont'd)

(iii) The estimated life of my affected source after reconstruction is: _____ years

(iv) If I were to forgo reconstruction and construct a entirely new affected source, comparable with the one I am reconstructing, my fixed capital costs would be: $ _____.00

End of Application for Approval of Construction or Reconstruction

Example
Notification of Compliance Status

This is a sample notification form which you can use to comply with 40 CFR 63.850(a)(6)

Applicable Rule: 40 CFR Part 63, Subpart LL - National Emission Standards for Hazardous Air Emissions for Primary Aluminum Reduction Plants. Notification of compliance status is being made in accordance with §63.850(a)(6).

1. Print or type the following information for each **primary aluminum reduction plant**:

Owner/Operator/Title _____

Street Address_____

City _____ State _____ Zip Code: _____

Plant Name _____

Plant Contact/Title _____

Plant Contact Phone Number *(optional)* _____

Plant Address (if different than owner/operator's) _____

Street Address _____

City _____ State _____ Zip Code: _____

My facility is a major source area source

2. Fill out only if you have a **paste production plant.** Otherwise, go to 3.

(a) List your paste production plants and the type of control you use:

Paste production plant	***Type of control***

(b) My paste plant is subject to the requirements in:

§ 63.843(b)(1) and (2) -- dry coke scrubber equipment standard

§ 63.844(b)(1) and (3) -- emission limits for alternative control devices

(c) If your paste plant is subject to emission limits for alternative control devices in § 63.844(b)(3), please provide the following information.

Example Notification of Compliance Status (cont'd)

(1) Applicable emission limit:

0.011 lb POM/ton of paste for continuous mixers

0.024 lb POM/ton of paste for batch mixers

(2) Average of POM test results: _____ lb/ton of paste

(3) POM test method

EPA Method 315

Other (describe) _____

(d) Provide information on parametric monitoring of the control device or attach a copy of the Continuous Parameter Monitoring Plan [§ 63.848(f)]:

(1) What is monitored? _____

(2) How frequently is it monitored? _____

(3) What are the acceptable operating limits? _____

(4) Provide the basis or brief rationale for selecting the parameters and operating limits:

_____

_____

_____

_____

(e) My paste production operations are complying with the requirements in § 63.843(b):

Yes

No

3. Fill out only if you have an **anode bake furnace.** Otherwise, go to 4:

Example Notification of Compliance Status (cont'd)

(a) List your anode bake furnaces, the type of control you use, the emission limit, and the average of performance test results:

Anode bake furnaces	*Type of control*	*POM emissions (lb/ton anode)*		*TF emissions (lb/ton anode)*	
		Limit	*Test results*	*Limit*	*Test results*

(b) My anode bake furnaces are subject to the requirements in:

§ 63.843(c) -- single bake furnace limits

§ 63.846(c) -- emission averaging limits

(c) POM test method

EPA Method 315

Other (describe) _____

(d) TF test method

EPA Method 13A

EPA Method 13B

Other (describe) _____

(e) Provide information on parametric monitoring of the control device or attach a copy of the Continuous Parameter Monitoring Plan [§ 63.848(f)]:

(1) What is monitored? _____

(2) How frequently is it monitored? _____

(3) What are the acceptable operating limits? _____

(4) Provide the basis or brief rationale for selecting the parameters and operating limits:

_____

_____

_____

Example Notification of Compliance Status (cont'd)

(f) My anode bake furnaces are complying with the requirements in § 63.843(c) or § 63.846(c):

Yes

No

4. Fill out only if you have **primary aluminum reduction potlines.** Otherwise, go to 5.

(a) List your potlines, the type of primary control you use, the emission limit, and the average of performance test results:

Potline	***Type of control***	***Soderberg only: POM emissions (lb/ton alumnium)***		***TF emissions (lb/ton aluminum)***	
		Limit	***Test results***	***Limit***	***Test results***

(b) My potlines are subject to the requirements in:

§ 63.843(a) -- single potline limits for existing sources

§ 63.844(a) -- single potline limits for new or reconstructed sources

§ 63.845 -- single potline limits for existing potline and NSPS potroom group

§ 63.846(b) -- emission averaging limits

(c) POM test method

EPA Method 315

Other (describe) _____

(d) TF test method - primary control system

EPA Method 13A

EPA Method 13B

Other (describe) _____

Example Notification of Compliance Status (cont'd)

(d) TF test method - secondary emissions

EPA Method 14

EPA Method 14A

State-approved method for wet roof scrubbers

Other (describe) _____

(e) Provide information on parametric monitoring of the control device or attach a copy of the Continuous Parameter Monitoring Plan [§ 63.848(f)]:

(1) What is monitored? _____

(2) How frequently is it monitored? _____

(3) What are the acceptable operating limits? _____

(4) Provide the basis or brief rationale for selecting the parameters and operating limits:

_____

_____

_____

_____

_____

(f) My potlines are complying with the applicable requirements listed above:

Yes

No

5. Fill out only if you have a **new pitch storage tank (startup after 9/26/96).**

(a) List your pitch storage tanks and the type of control system you use:

Pitch storage tank	***Type of control***

Example Notification of Compliance Status (cont'd)

(b) I have demonstrated compliance for my new pitch storage tank(s) by:

a performance test for POM control efficiency using Method 315 (attach results)

a design evaluation (attached)

(c) Provide information on parametric monitoring of the control device or attach a copy of the Continuous Parameter Monitoring Plan [§ 63.848(f)]:

(1) What is monitored? _____

(2) How frequently is it monitored? _____

(3) What are the acceptable operating limits? _____

(4) Provide the basis or brief rationale for selecting the parameters and operating limits:

_____

_____

_____

_____

_____

(d) My pitch storage tanks are complying with the requirements in § 63.844(d):

Yes

No

End of Notification of Compliance Status

Example
Annual Compliance Certification

This is a sample notification form that you can use to comply with 40 CFR 63.1306(g).

Applicable Rule: 40 CFR Part 63, Subpart LL - National Emission Standards for Hazardous Air Emissions for Primary Aluminum Reduction Plants. Notification of compliance status is being made in accordance with §63.850(a)(6).

You may use compliance certifications required in your State or local operating permit program to satisfy this reporting requirement as long as the compliance certification is consistent with §63.850(a)(6).

1. Print or type the following information for each **primary aluminum potline, anode bake furnace, paste production plant, or new pitch storage tank**:

   Owner/Operator/Title_____

   Street Address_____

   City _____ State _____ Zip Code:_____

   Plant Name _____

   Plant Contact/Title _____

   Plant Contact Phone Number *(optional)*_____

   Plant Address (if different than owner/operator's) _____

   Street Address_____

   City _____ State _____ Zip Code:_____

I certify that my potline □ anode bake furnace □ paste production plant □ pitch storage tank □ is in compliance with each applicable requirement in § 63.840 through § 63.8530, the Primary Aluminum Reduction Plant NESHAP (40 CFR 63, Subpart LL). For operations that are not in compliance, provide a description of your noncompliant operations.

Signature of Responsible Official: _____ [§63.1306(g)(3)]

Title of Responsible Official: _____

Who administers this regulation?

Your State or local agency for air pollution control, **or** your EPA Regional Office, will regulate you. If your plant is in Indian Country, your eligible Tribe **or** your EPA Regional Office will regulate you. You may be regulated by one or more agencies depending on whether they've been granted delegation of this rule.

> **Definition.** An *eligible Tribe* means "a Tribe that has been determined by the EPA to meet criteria for being treated in the same manner as a State, pursuant to the regulations implementing section 301(d)(2) of the Act."

Not all States have been granted delegation, or, if they have been granted delegation, they may not have been delegated all portions of the rule. Our EPA Regional Offices may also have retained certain rights even after delegation. You should check with your EPA Regional Office or State for the latest information.

Are plants in Indian country regulated by the State?

Generally, State rules aren't enforceable in Indian country. When we delegate authority to States under section 112(d), the authority to regulate doesn't extend to Indian country unless the delegation agreement says so.

We encourage tribes to develop the capacity to administer section 112(d) programs and to request delegation. If we don't delegate the authority to carry out section 112(d) rules to an eligible Tribe, the EPA Regional Office will be the regulatory authority.

Do I need a title V permit?

You'll need a title V permit if you're subject to the Primary Aluminum NESHAP since, under title V, you must get a permit if your facility is a *major source*. The Primary Aluminum NESHAP applies to major sources. All existing primary aluminum reduction plants are believed to be major sources subject to the rule.

If you question whether your facility is a major source, you'll need to calculate your HAP emissions from your entire facility, not just your primary aluminum operations. If you don't have federally enforceable limits in a State permit, you must calculate your emissions by determining your potential emissions. If you need help determining if your facility is a major source or what your potential emissions are, see the definitions in the Operating Permits Rule §70.2, **or** visit our title V policy and guidance page at *www.epa.gov/ttn/oarpg/t5main.html*.

How do I change my permit to include this rule?

If you've already been issued a final title V permit and you have three or more years left on your permit, your permitting authority will reopen your permit within 18 months of the publication date of the final rule or final amendments. If you have less than three years left on your permit, update your permit during your renewal period. If you have not been issued a final permit, you will need to update your application to reflect that the primary aluminum MACT rule is an applicable requirement if it was not previously identified as such.

To summarize, your options are as follows:

If a new rule is effective[1,2] and you have . . .	**Then . . .**
not been issued a final title V permit	update your permit application or draft permit
less than three years left on your permit	update your title V permit during renewal
three or more years left on your permit	your permitting authority will reopen your permit within 18 months after the publication date of the final rule or final amendments

[1] The rule's effective date is the date the final rule is published in the *Federal Register* (which is **10/7/97** for this rule).

[2] This also applies if existing rules are modified and final amendments are published in the *Federal Register.*

Title V permitting rules may change after the publication of this document. Keep abreast of any changes by checking the *Federal Register* **or** visit our title V websites at *www.epa.gov/ttn/oarpg/t5main.html* and *www.epa.gov/oar/oaqps/permits/*.

What portions of the General Provisions apply?

The General Provisions were published in the *Federal Register* on March 16, 1994 (Volume 59, page 12408) and apply to all NESHAPs, including the primary aluminum rule.

This means that when you became subject to this rule, you also became subject to the General Provisions. Some sections in this rule over-ride the General Provisions. You'll find that Appendix A of the final rule shows you which sections of the General Provisions **don't** apply to this rule. General Provision requirements, except for notification and reporting, are not addressed in this document.

Whom can I ask for help?

You can go to a lot of places for help, including all of the following:

- your State, local or Tribal agency for air pollution control
- your State's Small Business Assistance Program (SBAP)
- local, regional, or national trade associations
- your EPA Regional Office

State and local contacts can change frequently. To get the most current contact information, go to the STAPPA/ALAPCO website *(www.4cleanair.org)* and then the membership directory. The directory will give you the latest contact points for major air programs (that is, emission standards for toxic air pollutants, ozone, etc.) at the State and local level.

> *If you have questions about this rule, you should contact your State, local or Tribal agency before calling the EPA. Their rules may be more stringent than Federal requirements.*

The ***Trade Association*** representing the primary aluminum industry is listed below. Trade associations sometimes have rule information for their members.

Trade Association	Telephone #	Address
The Aluminum Association	(202) 862-5100	900 19th Street, NW Washington, D.C. 20006

Many States have a ***Small Business Assistance Program.*** If you're a small business and don't know who your SBAP is, you can call EPA's Control Technology Center Hotline at (919) 541-0800 or visit EPA's SBAP at *www.epa.gov/oar/oaqps/sbap* for help.

Contact numbers for ***EPA's Regional Air Division Offices*** may also change frequently. To obtain the most up-to-date information, you may want to visit your Regional Office's website. **Table 10.1** lists each of our Regional Offices, the Air Toxics Division Phone and Address, and the Regions internet home page. Make all written inquiries to the attention of "Primary Aluminum NESHAP Contact."

Can I get more information on the Web?

You can get a wealth of information on the World Wide Web (WWW). Some of the more popular ways to get information on this rule include:

- EPA's **Unified Air Toxics Website** (***www.epa.gov/ttn/uatw)***

  You can download copies of preambles, regulations, background information documents, policy memos, and other guidance materials here. All rule pages can be found under the Rules and Implementation page.

- EPA's **Applicability Determination Index** (ADI) ***(http://es.epa.gov/oeca/eptdd/adi.html)***

  EPA's Office of Enforcement and Compliance Assurance (OECA) posts memos dealing with applicability and compliance at this site.

- **STAPPA/ALAPCO** home page ***(http://www.4cleanair.org)***

  STAPPA/ALAPCO is the State and Territorial Air Pollution Program Administrators (STAPPA) and Local Air pollution Control Officials (ALAPCO) organization. STAPPA/ALAPCO has members representing each State and local agency for air pollution control.

  You can get air pollution information at this site, including a document entitled *"Communicating Air Quality: A Compendium of Resources."* It lists educational materials on air pollution that State and local agencies have created.

Table 10.1 EPA Regional Air Division Offices

EPA Region	States Covered	Division Phone and Address	Phone and Home Page
Region I	CT, ME, MA, NH, RI & VT	Office of Environmental Stewardship (OES) 1 Congress Street, Suite 1100 Boston, MA 02114-2023	(617) 918-1510 *www.epa.gov/region1*
Region II	NJ, NY, Puerto Rico & Virgin Islands	Division of Environmental Planning and Protection 290 Broadway, 21st Floor New York, NY 10007-1866	(212) 637-3735 *www.epa.gov/region2*
Region III	DE, MD, PA, VA, WV & DC	Air Protection Division, 3AP12 1650 Arch Street Philadelphia, PA 19103-2029	(215) 814-2056 *www.epa.gov/region3*
Region IV	AL, FL, GA, KY, MS, NC, SC & TN	Air, Pesticides and Toxics Management Division Atlanta Federal Center 61 Forsyth Street Atlanta, GA 30303-3104	(404) 562-9077 *www.epa.gov/region4*
Region V	IL, IN, MI, WI, MN & OH	Air and Radiation Division 77 West Jackson Blvd. Chicago, IL 60604-3507	(312) 353-2212 *www.epa.gov/region5*
Region VI	AR, LA, NM, OK & TX	Multimedia Planning and Permitting Division 1445 Ross Avenue Dallas, TX 75202-2733	(214) 665-7200 *www.epa.gov/region6*
Region VII	IA, KS, MO & NE	Air, RCRA and Toxics Division 901 North 5th Street Kansas City, KS 66101	(913) 551-7020 *www.epa.gov/region7*
Region VIII	CO, MT, ND, SD, UT & WY	Office of Enforcement, Compliance and Environmental Justice (ECEJ) 999 18th Street, 1 Denver Place, Suite 500 Denver, CO 80202-2405	(303) 312-6051 *www.epa.gov/region8*
Region IX	AZ, CA, HI, NV, American Samoa, & Guam	Air Division 75 Hawthorne Street San Francisco, CA 94105	(415) 744-1219 *www.epa.gov/region9*
Region X	AK, ID, WA & OR	Office of Air Quality 1200 Sixth Avenue Seattle, WA 98101	(206) 553-1505 *www.epa.gov/region10*

Chapter 11 - Supplemental information for State or local agencies and Tribes

How many plants may need to meet emission limits?

According to information we collected up to 1997, we estimated that approximately 23 existing primary aluminum plants in 14 States might be affected by this rule. You can find a list of plants that may be affected by the rule in **Table 11.1**. We've included the list as a reference for you, **not** as an official or complete list of regulated plants. You can see how many plants are in your state by going to **Figure 11.1**.

EPA's "*Enabling Document: Source Identification Procedures for Sources Subject to Regulations Under Section 112(d) of the Clean Air Act as Amended in 1990"*, September 20, 1996 (otherwise known as the ***"Cookbook"***), can help you identify the steps you can take to locate more sources.

You can download the cookbook by going to *www.epa.gov/ttn/uatw/eparules.html*, scroll down until you see "MACT Implementation Strategy".

How much HAP emissions will the rule reduce?

Nationwide emissions from primary aluminum potlines are estimated at 6,400 tpy of TF. We estimate that full implementation of the rule will reduce these emissions by almost 50 percent. POM emissions will be reduced by about 45 percent from their current level of about 3,200 tpy. TF and POM emissions from bake furnaces are estimated at 700 and 555 tpy, respectively. After control of all bake furnaces, we estimate a 97-percent reduction in TF emissions and an 84-percent reduction in POM. POM emisisons from paste production plants will be reduced by about 130 tpy, to about 16 tpy - an 89 percent reduction from the current level.

Emissions of other HAPs included in TF and POM emissions also will be reduced as will non-HAP pollutants such as particulate matter (PM). For example, PM emissions will be reduced by 16,000 tpy.

TABLE 11.1. PRIMARY ALUMINUM PRODUCTION PLANTS IN THE U.S.

State	Plant name and location	Type of plant
Indiana	Alcoa, Newburgh (Warrick)	Center-worked prebake
Kentucky	NSA, Hawesville	Center-worked prebake
	Alcan, Henderson	Center-worked prebake
Maryland	Eastalco, Frederick (Alumax)	Side-worked prebake
Missouri	Noranda, New Madrid	Center-worked prebake
Montana	Columbia Falls, Columbia Falls	Vertical stud Soderberg
New York	Alcoa, Massena	Center-worked prebake
	Reynolds, Massena	Horizontal stud Soderberg
North Carolina	Alcoa, Badin	Center-worked prebake
Ohio	Ormet, Hannibal	Center-worked prebake
Oregon	Reynolds, Troutdale	Center-worked prebake
	Northwest, The Dalles	Vertical stud Soderberg
South Carolina	Alumax, Goose Creek (Mount Holly)	Center-worked prebake
Tennessee	Alcoa, Alcoa	Center-worked prebake
Texas	Alcoa, Rockdale	Center-worked prebake
Washington	Intalco, Ferndale (Alumax)	Side-worked prebake
	Kaiser, Mead	Center-worked prebake
	Kaiser, Tacoma	Horizontal stud Soderberg
	Alcoa, Wenatchee	Center-worked prebake
	Reynolds, Longview	Horizontal stud Soderberg
	Goldendale, Goldendale	Vertical stud Soderberg
	Vanalco, Vancouver	Center-worked prebake
West Virginia	Century, Ravenswood	Center-worked prebake

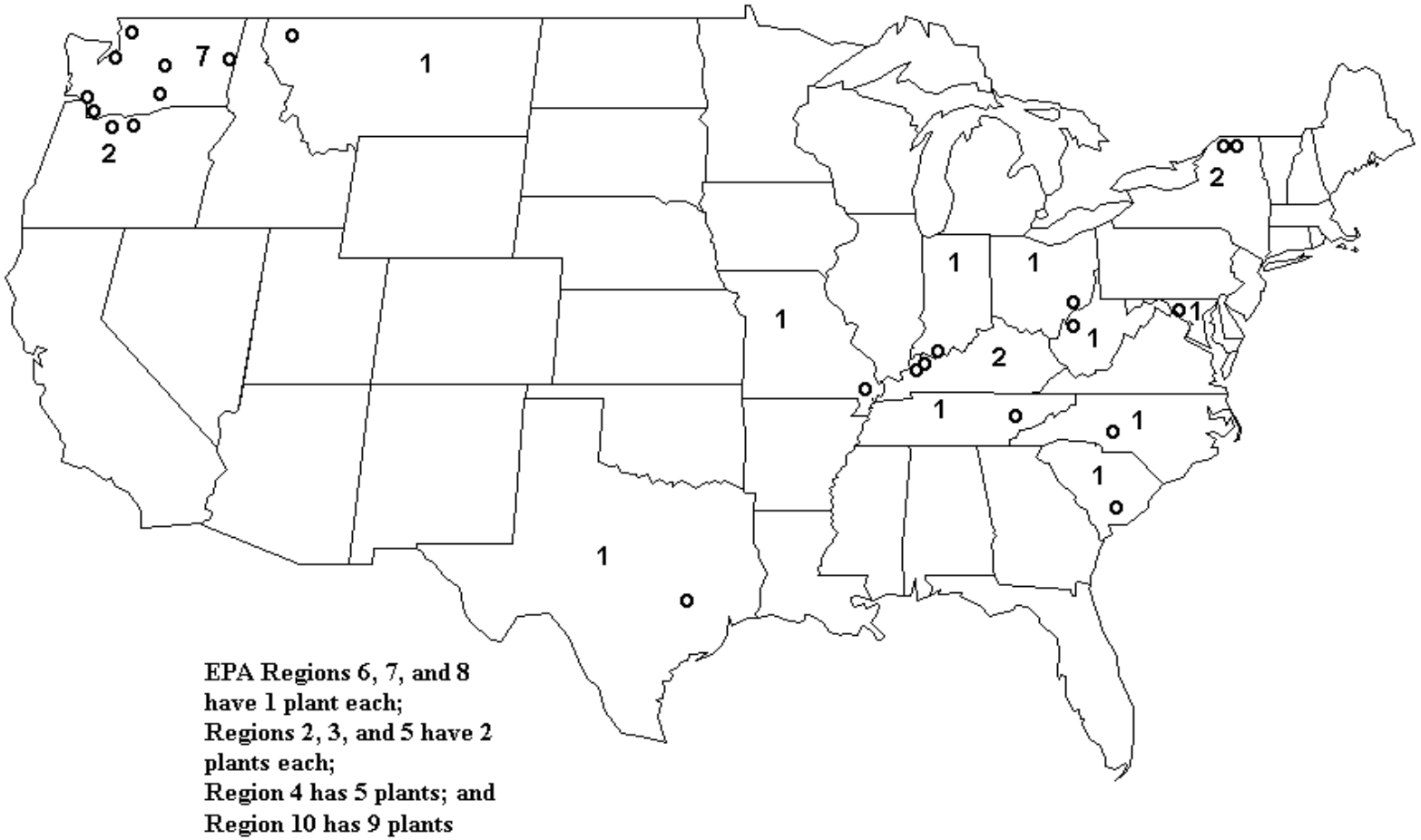

Figure 11-1. There Are 23 Primary Aluminum Plants in 14 States

APPENDIX A

WHERE TO FIND IT IN THE RULE

AND A COPY OF THE RULE

WHERE TO FIND IT IN THE RULE

Note: Page and column numbers are keyed to the *Federal Register* promulgation notice of 10/7/97 in this Appendix.

	Provision	Page	Col.
63.840	**Applicability**	52407	1
a	All potlines, bake furnaces, and paste plants at major sources, except for b	52407	1
b	Excludes one offsite bake furnace	52407	1
c	NSPS -- can comply with 63.845 or NSPS (subpart S in part 60)	52407	1
63.841	**Incorporation by reference**	52407	2
a	Vent manual and ASTM method	52407	2
b	Where to get copies	52407	2
63.842	**Definitions**	52407	2
63.843	**Emission limits for existing sources**	52408	2
a	Potlines (TF, POM; if subcategory changes)	52408	2
b	Paste plants	52408	3
c	Bake furnaces	52408	3
63.844	**Emission limits for new or reconstructed sources**	52409	1
a	Potlines	52409	1
b	Paste plants	52409	1
c	Bake furnaces	52409	1
d	Pitch storage tanks	52409	1
63.845	**Incorporation of NSPS for potroom groups**	52409	1
a	Applies to new, modified, reconstructed potroom groups	52409	1
b	Calculate lower TF limit	52409	3
c	Calculate upper TF limit	52409	3
d	Recalculate each time another potroom group is modified, reconstructed, or new	52409	3
e	Emission limit	52409	3
f	Report when between lower and upper limits	52410	1
g	Procedures to determine TF emissions	52410	1
h	10 percent opacity limit for potroom groups	52410	2
i	How to get an alternative opacity limit	52410	2

	Provision	Page	Col.
63.846	**Emission averaging**	52410	3
a	May average if State does not exclude it	52410	3
b	Procedures for potlines	52410	3
c	Procedures for bake furnaces	52411	1
d	Implementation plan	52411	1
1	Deadlines	52411	2
2	Contents	52411	2
3	Approval criteria	52411	2
4	Prohibitions	52411	3
5	Term (allows plan to be revised; also can request averaging after the compliance date)	52411	3
6	Operation	52411	3
63.847	**Performance tests**	52411	3
a	Compliance dates (2 years for all, 3 if you can show it is needed to install controls)	52411	3
b	Test plan - includes test requirements, site-specific factors (multiple control devices or stacks), frequency (separate by 6 days), and other testing details	52412	1
c	Initial performance test (can use prior test of control devices)	52412	2
d	Performance test requirements	52412	2
e	Equations to calculate emissions and determine compliance	52412	3
f	Paste plants - compliance demonstrated through site inspection and records	52413	1
g	Pitch storage tanks	52413	2
1	Parameters to be monitored	52413	2
2	Documentation for design evaluation	52413	2
3	Performance test requirements	52413	3
h	Establish limit(s) for parameter monitoring of control devices	52413	3
1	Establish limits for potlines and bake furnaces from historical data and performance tests	52413	3
2	Specify parameters for paste plant	52413	3
3	How to redetermine operating limits and ask regulatory authority for a change	52413	3

	Provision	Page	Col.
63.848	**Monitoring requirements**	52414	1
a	TF from potlines - monthly test	52414	1
b	POM from Soderbergs - quarterly test	52414	1
c	TF and POM from bake furnaces - annual test	52414	1
d	Similar potlines - alternatives to monthly manual sampling described for POM and TF	52414	1
e	How to get reduced sampling frequency	52414	3
f	Monitoring devices - for wet and dry scrubbers, ESPs, and roof scrubbers	52415	1
g	Inspect stacks each day for sign of visible emissions indicating abnormal operation	52415	1
h	Initiate corrective actions if monitoring parameter exceeded or inspection finds a problem	52415	2
i	Violation if parameter exceeded in more than 6 days in any semiannual reporting period	52415	2
j	Monitor weight of aluminum and anodes	52415	2
k	Monitoring devices must meet accuracy requirements	52415	2
l	Alternative parameters to those specified may be approved by regulatory authority	52415	2
m	Work with regulatory authority to establish parameters and limits for control devices not specifically covered in (f)	52415	2
63.849	**Test methods**	52415	3
a	For TF and POM	52415	3
1	Method 1 - velocity	52415	3
2	Method 2 - volumetric flow	52415	3
3	Method 3 - gas analysis	52415	3
4	Method 13 A or B for TF from stacks	52415	3
5	Method 13 A/B and Method 14 for TF from roof monitors (not roof scrubbers)	52415	3
6	Method 315 for POM from stacks	52415	3
7	Method 315 and Method 14 for POM from roof monitors (not roof scrubbers)	52415	3
b	For roof scrubbers, sample using existing State methods, analyze by Method 13 (TF) and Method 315 (POM)	52415	3
c	In Method 14, "potroom group" means "potline" for this subpart	52415	3
d	One Method 14 manifold per potline	52415	3
e	Describes procedures to get an alternative method approved	52416	1

	Provision	Page	Col.
63.850	**Notification, reporting, and recordkeeping**	52416	1
a	Notifications	52416	1
b	Performance test report	52416	2
c	Startup. shutdown, and malfunction plan (includes procedures for corrective actions if monitoring parameter exceeded or inspection finds a problem)	52416	2
d	Excess emissions report	52416	2
e	Recordkeeping [includes records of parametric monitoring]	52416	3
63.851	**Regulatory authority review procedures**	52417	2
a	Regulatory authority must approve/disapprove submissions within 60 days	52417	2
b	Regulatory authority must notify if complete/incomplete within 30 days	52417	2
63.852	**Applicability of General Provisions (Appendix A on p. 52418)**	52417	3
63.853	**Delegation of authority -- all delegated to the State**	52417	3

Federal Register

Tuesday
October 7, 1997

Part II

Environmental Protection Agency

40 CFR Parts 9, 60, and 63
National Emission Standards for Hazardous Air Pollutants for Source Categories; National Emission Standards for Hazardous Air Pollutants for Primary Aluminum Reduction Plants; Final Rule

* * * * *

PART 63—NATIONAL EMISSION STANDARDS FOR HAZARDOUS AIR POLLUTANTS FOR SOURCE CATEGORIES

7. The authority citation for part 63 continues to read as follows:

Authority: 42 U.S.C. 7401 *et seq.*

8. Part 63 is amended by adding subpart LL to read as follows:

Subpart LL—National Emission Standards for Hazardous Air Pollutants for Primary Aluminum Reduction Plants

Sec.

63.840 Applicability.
63.841 Incorporation by reference.
63.842 Definitions.
63.843 Emission limits for existing sources.
63.844 Emission limits for new or reconstructed sources.
63.845 Incorporation of new source performance standards for potroom groups.
63.846 Emission averaging.
63.847 Compliance provisions.
63.848 Emission monitoring requirements.
63.849 Test methods and procedures.
63.850 Notification, reporting, and recordkeeping requirements.
63.851 Regulatory authority review procedures.
63.852 Applicability of general provisions.
63.853 Delegation of authority.
63.854–63.859 [Reserved]
Table 1 to Subpart LL—Potline TF Limits for Emission Averaging
Table 2 to Subpart LL—Potline POM Limits for Emission Averaging
Table 3 to Subpart LL—Anode Bake Furnace Limits for Emission Averaging

Appendix A to Subpart LL—Applicability of General Provisions (40 CFR Part 63, Subpart A) to Subpart LL

Subpart LL—National Emission Standards for Hazardous Air Pollutants for Primary Aluminum Reduction Plants

§ 63.840 Applicability.

(a) Except as provided in paragraph (b) of this section, the requirements of this subpart apply to the owner or operator of each new pitch storage tank and new or existing potline, paste production plant, or anode bake furnace associated with primary aluminum production and located at a major source as defined in § 63.2.

(b) The requirements of this subpart do not apply to any existing anode bake furnace that is not located on the same site as a primary aluminum reduction plant. The owner or operator shall comply with the State MACT determination established by the applicable regulatory authority.

(c) An owner or operator of an affected facility (potroom group or anode bake furnace) under § 60.190 of this chapter may elect to comply with either the requirements of § 63.845 of this subpart or the requirements of subpart S of part 60 of this chapter.

§ 63.841 Incorporation by reference.

(a) The following material is incorporated by reference in the corresponding sections noted. This incorporation by reference was approved by the Director of the Federal Register on October 7, 1997, in accordance with 5 U.S.C. 552(a) and 1 CFR part 51. These materials are incorporated as they exist on the date of approval, and notice of any change in the materials will be published in the **Federal Register**. Revisions to ''Industrial Ventilation: A Manual of Recommended Practice'' (22nd ed.) are applicable only after publication of a document in the **Federal Register** to amend subpart LL to require use of the new information.

(1) Chapter 3, ''Local Exhaust Hoods'' and Chapter 5, ''Exhaust System Design Procedure'' of ''Industrial Ventilation: A Manual of Recommended Practice,'' American Conference of Governmental Industrial Hygienists, 22nd edition, 1995, IBR approved for §§ 63.843(b) and 63.844(b); and

(2) ASTM D 2986–95A, Standard Practice for Evaluation of Air Assay Media by the Monodisperse DOP (Dioctyl Phthalate) Smoke Test, IBR approved for section 7.1.1 of Method 315 in appendix A to this part.

(b) The materials incorporated by reference are available for inspection at the Office of the Federal Register, 800 North Capitol Street NW., Suite 700, 7th Floor, Washington, DC, and at the Air and Radiation Docket Center, U.S. EPA, 401 M Street, SW., Washington, DC. The materials also are available for purchase from one of the following addresses:

(1) Customer Service Department, American Conference of Governmental Industrial Hygienists (ACGIH), 1330 Kemper Meadow Drive, Cincinnati, Ohio 45240, telephone number (513) 742–2020; or

(2) American Society for Testing and Materials, 100 Bar Harbour Drive, West Conshohocken, Pennsylvania 19428, telephone number (610) 832–9500.

§ 63.842 Definitions.

Terms used in this subpart are defined in the Clean Air Act as amended (the Act), in § 63.2, or in this section as follows:

Anode bake furnace means an oven in which the formed green anodes are baked for use in a prebake process. This definition includes multiple anode bake furnaces controlled by a common control device (bake furnaces controlled by a common control device are considered to be one source).

Center-worked prebake (CWPB) process means a method of primary aluminum reduction using the prebake process in which the alumina feed is added down the center of the reduction cell.

Center-worked prebake one (CWPB1) means all existing center-worked prebake potlines not defined as center-worked prebake two (CWPB2) or center-worked prebake three (CWPB3) potlines.

Center-worked prebake two (CWPB2) means all existing center-worked prebake potlines located at Alcoa in Rockdale, Texas; Kaiser Aluminum in Mead, Washington; Ormet Corporation in Hannibal, Ohio; Ravenswood Aluminum in Ravenswood, West Virginia; Reynolds Metals in Troutdale, Oregon; and Vanalco Aluminum in Vancouver, Washington.

Center-worked prebake three (CWPB3) means all existing center-worked prebake potlines that produce very high purity aluminum, have a wet scrubber for the primary control system, and are located at the NSA primary aluminum plant in Hawesville, Kentucky.

Continuous parameter monitoring system means the total equipment that may be required to meet the data acquisition and availability requirements of this subpart, used to sample, condition (if applicable), analyze, and provide a record of process or control system parameters.

Horizontal stud Soderberg (HSS) process means a method of primary aluminum reduction using the Soderberg process in which the electrical current is introduced to the anode by steel rods (studs) inserted into the side of a monolithic anode.

Modified potroom group means an existing potroom group to which any physical change in, or change in the method of operation of, results in an increase in the amount of total fluoride emitted into the atmosphere by that potroom group.

Paste production plant means the processes whereby calcined petroleum coke, coal tar pitch (hard or liquid), and/or other materials are mixed, transferred, and formed into briquettes or paste for vertical stud Soderberg (VSS) and HSS processes or into green anodes for a prebake process. This definition includes all operations from initial mixing to final forming (i.e., briquettes, paste, green anodes) within the paste plant, including conveyors and units managing heated liquid pitch.

Pitch storage tank means any fixed roof tank that is used to store liquid

pitch that is not part of the paste production plant.

Polycyclic organic matter (POM) means organic matter extractable by methylene chloride as determined by Method 315 in appendix A to this part or by an approved alternative method.

Potline means a single, discrete group of electrolytic reduction cells electrically connected in series, in which alumina is reduced to form aluminum.

Potroom means a building unit that houses a group of electrolytic cells in which aluminum is produced.

Potroom group means an uncontrolled potroom, a potroom that is controlled individually, or a group of potrooms or potroom segments ducted to a common control system.

Prebake process means a method of primary aluminum reduction that uses an anode that was baked in an anode bake furnace, which is introduced into the top of the reduction cell and consumed as part of the reduction process.

Primary aluminum reduction plant means any facility manufacturing aluminum by electrolytic reduction.

Primary control system means the equipment used to capture the gases and particulate matter evacuated directly from the reduction cell and the emission control device(s) used to remove pollutants prior to discharge of the cleaned gas to the atmosphere. A roof scrubber is not part of the primary control system.

Primary emissions means the emissions discharged from the primary control system.

Reconstructed potroom group means an existing potroom group for which the components are replaced to such an extent that the fixed capital cost of the new components exceeds 50 percent of the fixed capital cost that would be required to construct a comparable entirely new potroom group, and for which it is technologically and economically feasible to meet the applicable emission limits for total fluoride set forth in this subpart.

Reconstruction means the replacement of components of a source to such an extent that:

(1) All of the major components of the source are replaced (for example, the major components of a potline include the raw material handling system, reduction cells, superstructure, hooding, ductwork, etc.); and

(2) It is technologically and economically feasible for the reconstructed source to meet the standards for new sources established in this subpart.

Roof monitor means that portion of the roof of a potroom building where gases not captured at the cell exit from the potroom.

Secondary emissions means the fugitive emissions that are not captured and controlled by the primary control system and that escape through the roof monitor or through roof scrubbers.

Side-worked prebake (SWPB) process means a method of primary aluminum reduction using the prebake process, in which the alumina is added along the sides of the reduction cell.

Soderberg process means a method of primary aluminum reduction in which the anode paste mixture is baked in the reduction pot by the heat resulting from the electrolytic process.

Total fluorides (TF) means elemental fluorine and all fluoride compounds as measured by Methods 13A or 13B in appendix A to part 60 of this chapter or by an approved alternative method.

Vertical stud Soderberg (VSS) process means a method of primary aluminum reduction using the Soderberg process, in which the electrical current is introduced to the anode by steel rods (studs) inserted into the top of a monolithic anode.

Vertical stud Soderberg one (VSS1) means all existing vertical stud Soderberg potlines located either at Northwest Aluminum in The Dalles, Oregon, or at Goldendale Aluminum in Goldendale, Washington.

Vertical stud Soderberg two (VSS2) means all existing vertical stud Soderberg potlines located at Columbia Falls Aluminum in Columbia Falls, Montana.

§ 63.843 Emission limits for existing sources.

(a) *Potlines.* The owner or operator shall not discharge or cause to be discharged into the atmosphere any emissions of TF or POM in excess of the applicable limits in paragraphs (a)(1) and (a)(2) of this section.

(1) *TF limits.* Emissions of TF shall not exceed:

(i) 0.95 kg/Mg (1.9 lb/ton) of aluminum produced for each CWPB1 potline;

(ii) 1.5 kg/Mg (3.0 lb/ton) of aluminum produced for each CWPB2 potline;

(iii) 1.25 kg/Mg (2.5 lb/ton) of aluminum produced for each CWPB3 potline;

(iv) 0.8 kg/Mg (1.6 lb/ton) of aluminum produced for each SWPB potline;

(v) 1.1 kg/Mg (2.2 lb/ton) of aluminum produced for each VSS1 potline;

(vi) 1.35 kg/Mg (2.7 lb/ton) of aluminum produced for each VSS2 potline; and

(vii) 1.35 kg/Mg (2.7 lb/ton) of aluminum produced for each HSS potline.

(2) *POM limits.* Emissions of POM shall not exceed:

(i) 2.35 kg/Mg (4.7 lb/ton) of aluminum produced for each HSS potline;

(ii) 1.2 kg/Mg (2.4 lb/ton) of aluminum produced for each VSS1 potline; and

(iii) 1.8 kg/Mg (3.6 lb/ton) of aluminum produced for each VSS2 potline.

(3) *Change in subcategory.* Any potline, other than a reconstructed potline, that is changed such that its applicable subcategory also changes shall meet the applicable emission limit in this subpart for the original subcategory or the new subcategory, whichever is more stringent.

(b) *Paste production plants.* The owner or operator shall install, operate, and maintain equipment to capture and control POM emissions from each paste production plant.

(1) The emission capture system shall be installed and operated to meet the generally accepted engineering standards for minimum exhaust rates as published by the American Conference of Governmental Industrial Hygienists in Chapters 3 and 5 of ''Industrial Ventilation: A Handbook of Recommended Practice'' (incorporated by reference in § 63.841 of this part); and

(2) Captured emissions shall be routed through a closed system to a dry coke scrubber; or

(3) The owner or operator may submit a written request for use of an alternative control device to the applicable regulatory authority for review and approval. The request shall contain information and data demonstrating that the alternative control device achieves POM emissions less than 0.011 lb/ton of paste for plants with continuous mixers or POM emissions less than 0.024 lb/ton of paste for plants with batch mixers. The POM emission rate shall be determined by sampling using Method 315 in appendix A to this part.

(c) *Anode bake furnaces.* The owner or operator shall not discharge or cause to be discharged into the atmosphere any emissions of TF or POM in excess of the limits in paragraphs (c)(1) and (c)(2) of this section.

(1) *TF limit.* Emissions of TF shall not exceed 0.10 kg/Mg (0.20 lb/ton) of green anode; and

(2) *POM limit.* Emissions of POM shall not exceed 0.09 kg/Mg (0.18 lb/ton) of green anode.

§ 63.844 Emission limits for new or reconstructed sources.

(a) *Potlines.* The owner or operator shall not discharge or cause to be discharged into the atmosphere any emissions of TF or POM in excess of the limits in paragraphs (a)(1) and (a)(2) of this section.

(1) *TF limit.* Emissions of TF shall not exceed 0.6 kg/Mg (1.2 lb/ton) of aluminum produced; and

(2) *POM limit.* Emissions of POM from Soderberg potlines shall not exceed 0.32 kg/Mg (0.63 lb/ton) of aluminum produced.

(b) *Paste production plants.* The owner or operator shall meet the requirements in § 63.843(b) for existing paste production plants.

(c) *Anode bake furnaces.* The owner or operator shall not discharge or cause to be discharged into the atmosphere any emissions of TF or POM in excess of the limits in paragraphs (c)(1) and (c)(2) of this section.

(1) *TF limit.* Emissions of TF shall not exceed 0.01 kg/Mg (0.02 lb/ton) of green anode; and

(2) *POM limit.* Emissions of POM shall not exceed 0.025 kg/Mg (0.05 lb/ton) of green anode.

(d) *Pitch storage tanks.* Each pitch storage tank shall be equipped with an emission control system designed and operated to reduce inlet emissions of POM by 95 percent or greater.

§ 63.845 Incorporation of new source performance standards for potroom groups.

(a) *Applicability.* The provisions in paragraphs (a) through (i) of this section shall apply to any Soderberg, CWPB2, and CWPB3 potline that adds a new potroom group to an existing potline or that is associated with a potroom group that meets the definition of ''modified potroom group'' or ''reconstructed potroom group.''

(1) The following shall not, by themselves, be considered to result in a potroom group modification:

(i) Maintenance, repair, and replacement that the applicable regulatory authority determines to be routine for the potroom group;

(ii) An increase in production rate of an existing potroom group, if that increase can be accomplished without a capital expenditure on that potroom group;

(iii) An increase in the hours of operation;

(iv) Use of an alternative fuel or raw material if, prior to the effective date of this subpart, the existing potroom group was designed to accommodate that alternative use;

(v) The addition or use of any system or device whose primary function is the reduction of air pollutants, except when an emission control system is removed or is replaced by a system that the applicable regulatory authority determines to be less environmentally beneficial; and

(vi) The relocation or change in ownership of an existing potroom group.

(2) The provisions in paragraphs (a)(2)(i) through (a)(2)(iv) of this section apply when the applicable regulatory authority must determine if a potroom group meets the definition of reconstructed potroom group.

(i) ''Fixed capital cost'' means the capital needed to provide all the depreciable components.

(ii) If an owner or operator of an existing potroom group proposes to replace components, and the fixed capital cost of the new components exceeds 50 percent of the fixed capital cost that would be required to construct a comparable entirely new potroom group, he/she shall notify the applicable regulatory authority of the proposed replacements. The notice must be postmarked 60 days (or as soon as practicable) before construction of the replacements is commenced and must include the following information:

(A) Name and address of the owner or operator;

(B) The location of the existing potroom group;

(C) A brief description of the existing potroom group and the components that are to be replaced;

(D) A description of the existing air pollution control equipment and the proposed air pollution control equipment;

(E) An estimate of the fixed capital cost of the replacements and of constructing a comparable entirely new potroom group;

(F) The estimated life of the existing potroom group after the replacements; and

(G) A discussion of any economic or technical limitations the potroom group may have in complying with the applicable standards of performance after the proposed replacements.

(iii) The applicable regulatory authority will determine, within 30 days of the receipt of the notice required by paragraph (a)(2)(ii) of this section and any additional information he/she may reasonably require, whether the proposed replacement constitutes a reconstructed potroom group.

(iv) The applicable regulatory authority's determination under paragraph (a)(2)(iii) of this section shall be based on:

(A) The fixed capital cost of the replacements in comparison to the fixed capital cost that would be required to construct a comparable entirely new potroom group;

(B) The estimated life of the potroom group after the replacements compared to the life of a comparable entirely new potroom group;

(C) The extent to which the components being replaced cause or contribute to the emissions from the potroom group; and

(D) Any economic or technical limitations on compliance with applicable standards of performance that are inherent in the proposed replacements.

(b) *Lower TF emission limit.* The owner or operator shall calculate a lower TF emission limit for any potline associated with the modified potroom group, reconstructed potroom group, or new potroom group using the following equation:

$$L_1 = f_1 \times L_{PG1} + (1 - f_1) \times L_{PL}$$

Where

L_1=the lower TF emission limit in kg/Mg (lb/ton);

f_1=the fraction of the potline's total aluminum production capacity that is contained within all modified potroom groups, reconstructed potroom groups, and new potroom groups;

L_{PG1}=0.95 kg/Mg (1.9 lb/ton) for prebake potlines and 1.0 kg/Mg (2.0 lb/ton) for Soderberg potlines; and

L_{PL}=the TF emission limit from § 63.843(a)(1) for the appropriate potline subcategory that would have otherwise applied to the potline.

(c) *Upper TF emission limit.* The owner or operator shall calculate an upper TF emission limit for any potline associated with the modified potroom group, reconstructed potroom group, or new potroom group using the following equation:

$$L_2 = f_1 \times L_{PG2} + (1 - f_1) \times L_{PL}$$

Where

L_2=the upper TF emission limit in kg/Mg (lb/ton); and

L_{PG2}=1.25 kg/Mg (2.5 lb/ton) for prebake potlines and 1.3 kg/Mg (2.6 lb/ton) for Soderberg potlines.

(d) *Recalculation.* The TF emission limits in paragraphs (b) and (c) of this section shall be recalculated each time a new potroom group is added to the potline and each time an additional potroom group meets the definition of ''modified potroom group'' or ''reconstructed potroom group.''

(e) *Emission limitation.* The owner or operator shall not discharge or cause to be discharged into the atmosphere emissions of TF from any potline

associated with the modified potroom group, reconstructed potroom group, or new potroom group that exceed the lower emission limit calculated in paragraph (b) of this section, except that emissions less than the upper limit calculated in paragraph (c) of this section will be considered in compliance if the owner or operator demonstrates that exemplary operation and maintenance procedures were used with respect to the emission control system and that proper control equipment was operating at the potline during the performance test.

(f) *Report.* Within 30 days of any performance test that reveals emissions that fall between the lower limit calculated in paragraph (b) of this section and the upper limit calculated in paragraph (c) of this section, the owner or operator shall submit to the applicable regulatory authority a report indicating whether all necessary control devices were online and operating properly during the performance test, describing the operating and maintenance procedures followed, and setting forth any explanation for the excess emissions.

(g) *Procedures to determine TF emissions.* The owner or operator shall determine TF emissions for the potline using the following procedures:

(1) Determine the emission rate of TF in kg/Mg (lb/ton) from sampling secondary emissions and the primary control system for all new potroom groups, modified potroom groups, and reconstructed potroom groups using the procedures, equations, and test methods in §§ 63.847, 63.848, and 63.849.

(2) Determine the emission rate of TF in kg/Mg (lb/ton) from sampling secondary emissions and the primary control system for potroom groups or sections of potroom groups within the potline that are not new potroom groups, modified potroom groups, or reconstructed potroom groups according to paragraphs (g)(2)(i) or (g)(2)(ii) of this section.

(i) Determine the mass emission rate of TF in kg/Mg (lb/ton) from at least one potroom group within the potline that is not a new potroom group, modified potroom group, or reconstructed potroom group using the procedures, equations, and test methods in §§ 63.847, 63.848, and 63.849, or

(ii) Use the results of the testing required by paragraph (g)(1) of this section to represent the entire potline based on a demonstration that the results are representative of the entire potline. Representativeness shall be based on showing that all of the potroom groups associated with the potline are substantially equivalent in terms of their structure, operability, type of emissions, volume of emissions, and concentration of emissions.

(3) Calculate the TF emissions for the potline in kg/Mg (lb/ton) based on the production-weighted average of the TF emission rates from paragraphs (g)(1) and (g)(2) of this section using the following equation:

$$E = f_1 \times E_{PG1} + (1\text{-}f_1) \times E_{PL}$$

where

E=the TF emission rate for the entire potline, kg/Mg (lb/ton);

f_1=the fraction of the potline's total aluminum production rate that is contained within all modified potroom groups, reconstructed potroom groups, and new potroom groups;

E_{PG1}=the TF emission rate from paragraph (g)(1) of this section for all modified potroom groups, reconstructed potroom groups, and new potroom groups, kg/Mg (lb/ton); and

E_{PL}=the TF emission rate for the balance of the potline from paragraph (g)(2) of this section, kg/Mg (lb/ton).

Compliance is demonstrated when TF emissions for the potline meet the requirements in paragraph (e) of this section.

(4) As an alternative to sampling as required in paragraphs (g)(1) and (g)(2) of this section, the owner or operator may perform representative sampling of the entire potline subject to the approval of the applicable regulatory authority. Such sampling shall provide coverage by the sampling equipment of both the new, modified, or reconstructed potroom group and the balance of the potline. The coverage for the new, modified, or reconstructed potroom group must meet the criteria specified in the reference methods in § 63.849. TF emissions shall be determined for the potline using the procedures, equations, and test methods in §§ 63.847, 63.848, and 63.849. Compliance is demonstrated when TF emissions for the potline meet the requirements in paragraph (e) of this section.

(h) *Opacity.* Except as provided in paragraph (i) of this section, the owner or operator shall not discharge or cause to be discharged into the atmosphere from the modified potroom group, reconstructed potroom group, or new potroom group any emissions of gases that exhibit 10 percent opacity or greater.

(i) *Alternative opacity limit.* An alternative opacity limit may be established in place of the opacity limit in paragraph (h) of this section using the following procedures:

(1) If the regulatory authority finds that a potline is in compliance with the applicable TF standard for which performance tests are conducted in accordance with the methods and procedures in § 63.849 but during the time such performance tests are being conducted fails to meet any applicable opacity standard, the regulatory authority shall notify and advise the owner or operator that he/she may petition the regulatory authority within 10 days of receipt of notification to make appropriate adjustment to the opacity standard.

(2) The regulatory authority will grant such a petition upon a demonstration by the owner or operator that the potroom group and associated air pollution control equipment were operated and maintained in a manner to minimize the opacity of emissions during the performance tests; that the performance tests were performed under the conditions established by the regulatory authority; and that the potroom group and associated air pollution control equipment were incapable of being adjusted or operated to meet the applicable opacity standard.

(3) As indicated by the performance and opacity tests, the regulatory authority will establish an opacity standard for any potroom group meeting the requirements in paragraphs (i)(1) and (i)(2) of this section such that the opacity standard could be met by the potroom group at all times during which the potline is meeting the TF emission limit.

(4) The alternative opacity limit established in paragraph (i)(3) of this section shall not be greater than 20 percent opacity.

§ 63.846 Emission averaging.

(a) *General.* The owner or operator of an existing potline or anode bake furnace in a State that does not choose to exclude emission averaging in the approved operating permit program may demonstrate compliance by emission averaging according to the procedures in this section.

(b) *Potlines.* The owner or operator may average TF emissions from potlines and demonstrate compliance with the limits in Table 1 of this subpart using the procedures in paragraphs (b)(1) and (b)(2) of this section. The owner or operator also may average POM emissions from potlines and demonstrate compliance with the limits in Table 2 of this subpart using the procedures in paragraphs (b)(1) and (b)(3) of this section.

(1) Monthly average emissions of TF and/or quarterly average emissions of POM shall not exceed the applicable

emission limit in Table 1 of this subpart (for TF emissions) and/or Table 2 of this subpart (for POM emissions). The emission rate shall be calculated based on the total emissions from all potlines over the period divided by the quantity of aluminum produced during the period, from all potlines comprising the averaging group.

(2) To determine compliance with the applicable emission limit in Table 1 of this subpart for TF emissions, the owner or operator shall determine the monthly average emissions (in lb/ton) from each potline from at least three runs per potline each month for TF secondary emissions using the procedures and methods in §§ 63.847 and 63.849. The owner or operator shall combine the results of secondary TF monthly average emissions with the TF results for the primary control system and divide total emissions by total aluminum production.

(3) To determine compliance with the applicable emission limit in Table 2 of this subpart for POM emissions, the owner or operator shall determine the quarterly average emissions (in lb/ton) from each potline from at least one run each month for POM emissions using the procedures and methods in §§ 63.847 and 63.849. The owner or operator shall combine the results of secondary POM quarterly average emissions with the POM results for the primary control system and divide total emissions by total aluminum production.

(c) *Anode bake furnaces.* The owner or operator may average TF emissions from anode bake furnaces and demonstrate compliance with the limits in Table 3 of this subpart using the procedures in paragraphs (c)(1) and (c)(2) of this section. The owner or operator also may average POM emissions from anode bake furnaces and demonstrate compliance with the limits in Table 3 of this subpart using the procedures in paragraphs (c)(1) and (c)(2) of this section.

(1) Annual emissions of TF and/or POM from a given number of anode bake furnaces making up each averaging group shall not exceed the applicable emission limit in Table 3 of this subpart in any one year; and

(2) To determine compliance with the applicable emission limit in Table 3 of this subpart for anode bake furnaces, the owner or operator shall determine TF and/or POM emissions from the control device for each furnace at least once a year using the procedures and methods in §§ 63.847 and 63.849.

(d) *Implementation plan.* The owner or operator shall develop and submit an implementation plan for emission averaging to the applicable regulatory authority for review and approval according to the following procedures and requirements:

(1) *Deadlines.* The owner or operator must submit the implementation plan no later than 6 months before the date that the facility intends to comply with the emission averaging limits.

(2) *Contents.* The owner or operator shall include the following information in the implementation plan or in the application for an operating permit for all emission sources to be included in an emissions average:

(i) The identification of all emission sources (potlines or anode bake furnaces) in the average;

(ii) The assigned TF or POM emission limit for each averaging group of potlines or anode bake furnaces;

(iii) The specific control technology or pollution prevention measure to be used for each emission source in the averaging group and the date of its installation or application. If the pollution prevention measure reduces or eliminates emissions from multiple sources, the owner or operator must identify each source;

(iv) The test plan for the measurement of TF or POM emissions in accordance with the requirements in § 63.847(b);

(v) The operating parameters to be monitored for each control system or device and a description of how the operating limits will be determined;

(vi) If the owner or operator requests to monitor an alternative operating parameter pursuant to § 63.848(l):

(A) A description of the parameter(s) to be monitored and an explanation of the criteria used to select the parameter(s); and

(B) A description of the methods and procedures that will be used to demonstrate that the parameter indicates proper operation of the control device; the frequency and content of monitoring, reporting, and recordkeeping requirements; and a demonstration, to the satisfaction of the applicable regulatory authority, that the proposed monitoring frequency is sufficient to represent control device operating conditions; and

(vii) A demonstration that compliance with each of the applicable emission limit(s) will be achieved under representative operating conditions.

(3) *Approval criteria.* Upon receipt, the regulatory authority shall review and approve or disapprove the plan or permit application according to the following criteria:

(i) Whether the content of the plan includes all of the information specified in paragraph (d)(2) of this section; and

(ii) Whether the plan or permit application presents sufficient information to determine that compliance will be achieved and maintained.

(4) *Prohibitions.* The applicable regulatory authority shall not approve an implementation plan or permit application containing any of the following provisions:

(i) Any averaging between emissions of differing pollutants or between differing sources. Emission averaging shall not be allowed between TF and POM, and emission averaging shall not be allowed between potlines and bake furnaces;

(ii) The inclusion of any emission source other than an existing potline or existing anode bake furnace or the inclusion of any potline or anode bake plant not subject to the same operating permit;

(iii) The inclusion of any potline or anode bake furnace while it is shut down; or

(iv) The inclusion of any periods of startup, shutdown, or malfunction, as described in the startup, shutdown, and malfunction plan required by § 63.850(c), in the emission calculations.

(5) *Term.* Following review, the applicable regulatory authority shall approve the plan or permit application, request changes, or request additional information. Once the applicable regulatory authority receives any additional information requested, the applicable regulatory authority shall approve or disapprove the plan or permit application within 120 days.

(i) The applicable regulatory authority shall approve the plan for the term of the operating permit;

(ii) To revise the plan prior to the end of the permit term, the owner or operator shall submit a request to the applicable regulatory authority; and

(iii) The owner or operator may submit a request to the applicable regulatory authority to implement emission averaging after the applicable compliance date.

(6) *Operation.* While operating under an approved implementation plan, the owner or operator shall monitor the operating parameters of each control system, keep records, and submit periodic reports as required for each source subject to this subpart.

§ 63.847 Compliance provisions.

(a) *Compliance dates.* The owner or operator of a primary aluminum plant shall demonstrate initial compliance with the requirements of this subpart by:

(1) October 7, 1999, for an owner or operator of an existing plant or source;

(2) October 9, 2000, for an existing source, provided the owner or operator demonstrates to the satisfaction of the applicable regulatory authority that additional time is needed to install or modify the emission control equipment;

(3) October 8, 2001, for an existing source that is granted an extension by the regulatory authority under section 112(i)(3)(B) of the Act; or

(4) Upon startup, for an owner or operator of a new or reconstructed source.

(b) *Test plan*. The owner or operator shall prepare a site-specific test plan prior to the initial performance test according to the requirements of § 63.7(c) of this part. The test plan must include procedures for conducting the initial performance test and for subsequent performance tests required in § 63.848 for emission monitoring. In addition to the information required by § 63.7, the test plan shall include:

(1) Procedures to ensure a minimum of three runs are performed annually for the primary control system for each source;

(2) For a source with a single control device exhausted through multiple stacks, procedures to ensure that at least three runs are performed annually by a representative sample of the stacks satisfactory to the applicable regulatory authority;

(3) For multiple control devices on a single source, procedures to ensure that at least one run is performed annually for each control device by a representative sample of the stacks satisfactory to the applicable regulatory authority;

(4) Procedures for sampling single stacks associated with multiple anode bake furnaces;

(5) For plants with roof scrubbers, procedures for rotating sampling among the scrubbers or other procedures to obtain representative samples as approved by the applicable regulatory authority;

(6) For a VSS1 potline, procedures to ensure that one fan (or one scrubber) per potline is sampled for each run;

(7) For a SWPB potline, procedures to ensure that the average of the sampling results for two fans (or two scrubbers) per potline is used for each run; and

(8) Procedures for establishing the frequency of testing to ensure that at least one run is performed before the 15th of the month, at least one run is performed after the 15th of the month, and that there are at least 6 days between two of the runs during the month, or that secondary emissions are measured according to an alternate schedule satisfactory to the applicable regulatory authority.

(c) *Initial performance test*. Following approval of the site-specific test plan, the owner or operator shall conduct an initial performance test during the first month following the compliance date in accordance with the procedures in paragraph (d) of this section. If a performance test has been conducted on the primary control system for potlines or for the anode bake furnace within the 12 months prior to the compliance date, the results of that performance test may be used to determine initial compliance.

(d) *Performance test requirements*. The initial performance test and all subsequent performance tests shall be conducted in accordance with the requirements of the general provisions in subpart A of this part, the approved test plan, and the procedures in this section.

(1) *TF emissions from potlines*. For each potline, the owner or operator shall measure and record the emission rate of TF exiting the outlet of the primary control system for each potline and the rate of secondary emissions exiting through each roof monitor, or for a plant with roof scrubbers, exiting through the scrubbers. Using the equation in paragraph (e)(1) of this section, the owner or operator shall compute and record the average of at least three runs each month for secondary emissions and at least three runs each year for the primary control system to determine compliance with the applicable emission limit. Compliance is demonstrated when the emission rate of TF is equal to or less than the applicable emission limit in §§ 63.843, 63.844, or 63.846.

(2) *POM emissions from Soderberg potlines*. For each Soderberg (HSS, VSS1, and VSS2) potline, the owner or operator shall measure and record the emission rate of POM exiting the primary emission control system and the rate of secondary emissions exiting through each roof monitor, or for a plant with roof scrubbers, exiting through the scrubbers. Using the equation in paragraph (e)(2) of this section, the owner or operator shall compute and record the average of at least three runs each quarter (one run per month) for secondary emissions and at least three runs each year for the primary control system to determine compliance with the applicable emission limit. Compliance is demonstrated when the emission rate of POM is equal to or less than the applicable emission limit in §§ 63.843, 63.844, or 63.846.

(3) *Previous control device tests*. If the owner or operator has performed more than one test of primary emission control device(s) for a potline or for a bake furnace during the previous consecutive 12 months, the average of all runs performed in the previous 12-month period shall be used to determine the contribution from the primary emission control system.

(4) *TF and POM emissions from anode bake furnaces*. For each anode bake furnace, the owner or operator shall measure and record the emission rate of TF and POM exiting the exhaust stacks(s) of the primary emission control system for each anode bake furnace. Using the equations in paragraphs (e)(3) and (e)(4) of this section, the owner or operator shall compute and record the average of at least three runs each year to determine compliance with the applicable emission limits for TF and POM. Compliance is demonstrated when the emission rates of TF and POM are equal to or less than the applicable TF and POM emission limits in §§ 63.843, 63.844, or 63.846.

(e) *Equations*. The owner or operator shall determine compliance with the applicable TF and POM emission limits using the following equations and procedures:

(1) Compute the emission rate (E_p) of TF from each potline using Equation 1:

$$E_p = \frac{\left[\left(C_{s1} \times Q_{sd}\right)_1 + \left(C_{s2} \times Q_{sd}\right)_2\right]}{(P \times K)} \qquad \text{(Equation 1)}$$

Where

E_p=emission rate of TF from a potline, kg/Mg (lb/ton);

C_{s1}=concentration of TF from the primary control system, mg/dscm (mg/dscf);

Q_{sd}=volumetric flow rate of effluent gas corresponding to the appropriate subscript location, dscm/hr (dscf/hr);

C_{s2}=concentration of TF as measured for roof monitor emissions, mg/dscm (mg/dscf);

P=aluminum production rate, Mg/hr (ton/hr);
K=conversion factor, 10^6 mg/kg (453,600 mg/lb);
$_1$ = subscript for primary control system effluent gas; and
$_2$ = subscript for secondary control system or roof monitor effluent gas.

(2) Compute the emission rate of POM from each potline using Equation 1,

Where:

E_p = emission rate of POM from the potline, kg/mg (lb/ton); and
C_s = concentration of POM, mg/dscm (mg/dscf). POM emission data collected during the installation and startup of a cathode shall not be included in C_s.

(3) Compute the emission rate (E_b) of TF from each anode bake furnace using Equation 2,

$$E_b = \frac{(C_s \times Q_{sd})}{(P_b \times K)} \qquad \text{(Equation 2)}$$

Where:

E_b = emission rate of TF, kg/mg (lb/ton) of green anodes produced;
C_s = concentration of TF, mg/dscm (mg/dscf);
Q_{sd} = volumetric flow rate of effluent gas, dscm/hr (dscf/hr);
P_b = quantity of green anode material placed in the furnace, mg/hr (ton/hr); and
K = conversion factor, 10^6 mg/kg (453,600 mg/lb).

(4) Compute the emission rate of POM from each anode bake furnace using Equation 2,

Where:

C_s = concentration of POM, mg/dscm (mg/dscf).

(5) Determine the weight of the aluminum tapped from the potline and the weight of the green anode material placed in the anode bake furnace using the monitoring devices required in § 63.848(j).

(6) Determine the aluminum production rate (P) by dividing the number of hours in the calendar month into the weight of aluminum tapped from the potline during the calendar month that includes the three runs of a performance test.

(7) Determine the rate of green anode material introduced into the furnace by dividing the number of operating hours in the calendar month into the weight of green anode material used during the calendar month in which the performance test was conducted.

(f) *Paste production plants.* Initial compliance with the standards for existing and new paste production plants in §§ 63.843(b) and 63.844(b) will be demonstrated through site inspection(s) and review of site records by the applicable regulatory authority.

(g) *Pitch storage tanks.* The owner or operator shall demonstrate initial compliance with the standard for pitch storage tanks in § 63.844(d) by preparing a design evaluation or by conducting a performance test. The owner or operator shall submit for approval by the regulatory authority the information specified in paragraph (g)(1) of this section, along with the information specified in paragraph (g)(2) of this section where a design evaluation is performed or the information specified in paragraph (g)(3) of this section where a performance test is conducted.

(1) A description of the parameters to be monitored to ensure that the control device is being properly operated and maintained, an explanation of the criteria used for selection of that parameter (or parameters), and the frequency with which monitoring will be performed; and

(2) Where a design evaluation is performed, documentation demonstrating that the control device used achieves the required control efficiency during reasonably expected maximum filling rate. The documentation shall include a description of the gas stream that enters the control device, including flow and POM content under varying liquid level conditions, and the information specified in paragraphs (g)(2)(i) through (g)(2)(vi) of this section, as applicable.

(i) If the control device receives vapors, gases, or liquids, other than fuels, from emission points other than pitch storage tanks, the efficiency demonstration is to include consideration of all vapors, gases, and liquids, other than fuels, received by the control device;

(ii) If an enclosed combustion device with a minimum residence time of 0.5 seconds and a minimum temperature of 760°C (1,400°F) is used to meet the emission reduction requirement specified in § 83.844(d), documentation that those conditions exist is sufficient to meet the requirements of § 83.844(d);

(iii) Except as provided in paragraph (g)(2)(ii) of this section, for thermal incinerators, the design evaluation shall include the autoignition temperature of the organic HAP, the flow rate of the organic HAP emission stream, the combustion temperature, and the residence time at the combustion temperature;

(iv) If the pitch storage tank is vented to the emission control system installed for control of emissions from the paste production plant pursuant to § 63.843(b), documentation of compliance with the requirements of § 63.843(b) is sufficient to meet the requirements of § 63.844(d);

(v) For carbon adsorbers, the design evaluation shall include the affinity of the organic vapors for carbon, the amount of carbon in each bed, the number of beds, the humidity of the feed gases, the temperature of the feed gases, the flow rate of the organic HAP emission stream, and if applicable, the desorption schedule, the regeneration stream pressure or temperature, and the flow rate of the regeneration stream. For vacuum desorption, the pressure drop shall be included; and

(vi) For condensers, the design evaluation shall include the final temperature of the organic HAP vapors, the type of condenser, and the design flow rate of the organic HAP emission stream.

(3) If a performance test is conducted, the owner or operator shall determine the control efficiency for POM during tank loading using Method 315 in appendix A to this part. The owner or operator shall include the following information:

(i) Identification of the pitch storage tank and control device for which the performance test will be submitted; and

(ii) Identification of the emission point(s) that share the control device with the pitch storage tank and for which the performance test will be conducted.

(h) *Selection of monitoring parameters.* The owner or operator shall determine the operating limits and monitoring frequency for each control device that is to be monitored as required in § 63.848(f).

(1) For potlines and anode bake furnaces, the owner or operator shall determine upper and/or lower operating limits, as appropriate, for each monitoring device for the emission control system from the values recorded during each of the runs performed during the initial performance test and from historical data from previous performance tests conducted by the methods specified in this subpart.

(2) For a paste production plant, the owner or operator shall specify and provide the basis or rationale for selecting parameters to be monitored and the associated operating limits for the emission control device.

(3) The owner or operator may redetermine the upper and/or lower operating limits, as appropriate, based on historical data or other information and submit an application to the applicable regulatory authority to change the applicable limit(s). The redetermined limits shall become

effective upon approval by the applicable regulatory authority.

§ 63.848 Emission monitoring requirements.

(a) *TF emissions from potlines.* Using the procedures in § 63.847 and in the approved test plan, the owner or operator shall monitor emissions of TF from each potline by conducting monthly performance tests. The owner or operator shall compute and record the monthly average from at least three runs for secondary emissions and the previous 12-month average of all runs for the primary control system to determine compliance with the applicable emission limit. The owner or operator must include all valid runs in the monthly average. The duration of each run for secondary emissions must represent a complete operating cycle.

(b) *POM emissions from Soderberg potlines.* Using the procedures in § 63.847 and in the approved test plan, the owner or operator shall monitor emissions of POM from each Soderberg (HSS, VSS1, and VSS2) potline every three months. The owner or operator shall compute and record the quarterly (3-month) average from at least one run per month for secondary emissions and the previous 12-month average of all runs for the primary control systems to determine compliance with the applicable emission limit. The owner or operator must include all valid runs in the quarterly (3-month) average. The duration of each run for secondary emissions must represent a complete operating cycle. The primary control system must be sampled over an 8-hour period, unless site-specific factors dictate an alternative sampling time subject to the approval of the regulatory authority.

(c) *TF and POM emissions from anode bake furnaces.* Using the procedures in § 63.847 and in the approved test plan, the owner or operator shall monitor TF and POM emissions from each anode bake furnace on an annual basis. The owner or operator shall compute and record the annual average of TF and POM emissions from at least three runs to determine compliance with the applicable emission limits. The owner or operator must include all valid runs in the annual average.

(d) *Similar potlines.* As an alternative to monthly monitoring of TF or POM secondary emissions from each potline using the test methods in § 63.849, the owner or operator may perform monthly monitoring of TF or POM secondary emissions from one potline using the test methods in §§ 63.849 (a) or (b) to represent the performance of similar potline(s). The similar potline(s) shall be monitored using an alternative method that meets the requirements of paragraphs (d)(1) through (d)(7) of this section. Two or more potlines are similar if the owner or operator demonstrates that their structure, operability, type of emissions, volume of emissions, and concentration of emissions are substantially equivalent.

(1) To demonstrate (to the satisfaction of the regulatory authority) that the level of emission control performance is the same or better, the owner or operator shall perform an emission test using an alternative monitoring procedure for the similar potline simultaneously with an emission test using the applicable test methods. The results of the emission test using the applicable test methods must be in compliance with the applicable emission limit for existing or new potlines in §§ 63.843 or 63.844. An alternative method:

(i) For TF emissions, must account for or include gaseous fluoride and cannot be based on measurement of particulate matter or particulate fluoride alone; and

(ii) For TF and POM emissions, must meet or exceed Method 14 criteria.

(2) An HF continuous emission monitoring system is an approved alternative for the monitoring of TF secondary emissions.

(3) An owner or operator electing to use an alternative monitoring procedure shall establish an alternative emission limit based on at least nine simultaneous runs using the applicable test methods and the alternative monitoring method. All runs must represent a full process cycle.

(4) The owner or operator shall derive an alternative emission limit for the HF continuous emission monitor or an alternative method using either of the following procedures:

(i) Use the highest value from the alternative method associated with a simultaneous run by the applicable test method that does not exceed the applicable emission limit; or

(ii) Correlate the results of the two methods (the applicable test method results and the alternative monitoring method results) and establish an emission limit for the alternative monitoring system that corresponds to the applicable emission limit.

(5) The owner or operator shall submit the results required in paragraph (d)(4) of this section and all supporting documentation to the applicable regulatory authority for review and approval.

(6) The regulatory authority shall review and approve or disapprove the request for an alternative method and alternative emission limit. The criterion for approval shall be a demonstration (to the satisfaction of the regulatory authority) that the alternative method and alternative emission limit achieve a level of emission control that is the same as or better than the level that would have otherwise been achieved by the applicable method and emission limit.

(7) If the alternative method is approved by the applicable regulatory authority, the owner or operator shall perform monthly emission monitoring using the approved alternative monitoring procedure to demonstrate compliance with the alternative emission limit for each similar potline.

(e) *Reduced sampling frequency.* The owner or operator may submit a written request to the applicable regulatory authority to establish an alternative testing requirement to reduce the sampling of secondary TF emissions from potlines from monthly to quarterly.

(1) In the request, the owner or operator shall provide information and data demonstrating, to the satisfaction of the applicable regulatory authority, that secondary emissions of TF from potlines have low variability during normal operations using the procedures in paragraphs (e)(1)(i) or (e)(1)(ii) of this section.

(i) Submit data from 24 consecutive months of sampling that show the average TF emissions are less than 60 percent of the applicable limit and that no monthly performance test in the 24 months of sampling exceeds 75 percent of the applicable limit; or

(ii) Submit data and a statistical analysis that the regulatory authority may evaluate based on the approach used in ''Primary Aluminum: Statistical Analysis of Potline Fluoride Emissions and Alternative Sampling Frequency'' (EPA–450–86–012, October 1986), which is available from the National Technical Information Service (NTIS), 5285 Port Royal Road, Springfield, VA 22161.

(2) An approved alternative requirement must include a test schedule and the method to be used to measure emissions for performance tests.

(3) The owner or operator of a plant that has received approval of an alternative sampling frequency under § 60.194 of this chapter is deemed to have approval of the alternative sampling frequency under this subpart.

(4) If emissions in excess of the applicable TF limit occur while performing quarterly sampling approved under paragraph (e)(1)(i) of this section, the owner or operator shall return to monthly sampling for at least 12 months and may reduce to quarterly sampling when:

(i) The average of all tests performed over the most recent 24-month period does not exceed 60 percent of the applicable limit, and

(ii) No more than one monthly performance test in the most recent 24-month period exceeds 75 percent of the applicable limit.

(5) If emissions in excess of the applicable TF limit occur while performing quarterly sampling approved under paragraph (e)(1)(ii) of this section, the owner or operator shall immediately return to the monthly sampling schedule required by paragraph (a) of this section until another request for an alternative sampling frequency is approved by the applicable regulatory authority.

(f) *Monitoring parameters for emission control devices.* The owner or operator shall install, operate, calibrate, and maintain a continuous parameter monitoring system for each emission control device. The owner or operator shall submit for approval by the regulatory authority a description of the parameter(s) to be monitored, the operating limits, and the monitoring frequency to ensure that the control device is being properly operated and maintained. An explanation of the criteria used for selection of the parameter(s), the operating limits, and the monitoring frequency, including how these relate to emission control also shall be submitted to the regulatory authority. Except as provided in paragraph (l) of this section, the following monitoring devices shall be installed:

(1) For dry alumina scrubbers, devices for the measurement of alumina flow and air flow;

(2) For dry coke scrubbers, devices for the measurement of coke flow and air flow;

(3) For wet scrubbers as the primary control system, devices for the measurement of water flow and air flow;

(4) For electrostatic precipitators, devices for the measurement of voltage and secondary current; and

(5) For wet roof scrubbers for secondary emission control:

(i) A device for the measurement of total water flow; and

(ii) The owner or operator shall inspect each control device at least once each operating day to ensure the control device is operating properly and record the results of each inspection.

(g) *Visible emissions.* The owner or operator shall visually inspect the exhaust stack(s) of each control device on a daily basis for evidence of any visible emissions indicating abnormal operation.

(h) *Corrective action.* If a monitoring device for a primary control device measures an operating parameter outside the limit(s) established pursuant to § 63.847(h), if visible emissions indicating abnormal operation are observed from the exhaust stack of a control device during a daily inspection, or if a problem is detected during the daily inspection of a wet roof scrubber for potline secondary emission control, the owner or operator shall initiate the corrective action procedures identified in the startup, shutdown, and malfunction plan within 1 hour. Failure to initiate the corrective action procedures within 1 hour or to take the necessary corrective actions to remedy the problem is a violation.

(i) *Exceedances.* If the limit for a given operating parameter associated with monitoring a specific control device is exceeded six times in any semiannual reporting period, then any subsequent exceedance in that reporting period is a violation. For the purpose of determining the number of exceedances, no more than one exceedance shall be attributed in any given 24-hour period.

(j) *Weight of aluminum and green anodes.* The owner or operator of a new or existing potline or anode bake furnace shall install, operate, and maintain a monitoring device to determine the daily weight of aluminum produced and the weight of green anode material placed in the anode bake furnace. The weight of green anode material may be determined by monitoring the weight of all anodes or by monitoring the number of anodes placed in the furnace and determining an average weight from measurements of a representative sample of anodes.

(k) *Accuracy and calibration.* The owner or operator shall submit recommended accuracy requirements to the regulatory authority for review and approval. All monitoring devices required by this section must be certified by the owner or operator to meet the accuracy requirements and must be calibrated in accordance with the manufacturer's instructions.

(l) *Alternative operating parameters.* The owner or operator may monitor alternative control device operating parameters subject to prior written approval by the applicable regulatory authority.

(m) *Other control systems.* An owner or operator using a control system not identified in this section shall request that the applicable regulatory authority include the recommended parameters for monitoring in the facility's part 70 permit.

§ 63.849 Test methods and procedures.

(a) The owner or operator shall use the following reference methods to determine compliance with the applicable emission limits for TF and POM emissions:

(1) Method 1 in appendix A to part 60 of this chapter for sample and velocity traverses;

(2) Method 2 in appendix A to part 60 of this chapter for velocity and volumetric flow rate;

(3) Method 3 in appendix A to part 60 of this chapter for gas analysis;

(4) Method 13A or Method 13B in appendix A to part 60 of this chapter, or an approved alternative, for the concentration of TF where stack or duct emissions are sampled;

(5) Method 13A or Method 13B and Method 14 or Method 14A in appendix A to part 60 of this chapter or an approved alternative method for the concentration of TF where emissions are sampled from roof monitors not employing wet roof scrubbers;

(6) Method 315 in appendix A to this part or an approved alternative method for the concentration of POM where stack or duct emissions are sampled; and

(7) Method 315 in appendix A to this part and Method 14 in appendix A to part 60 of this chapter or an approved alternative method for the concentration of POM where emissions are sampled from roof monitors not employing wet roof scrubbers.

(b) The owner or operator of a VSS potline or a SWPB potline equipped with wet roof scrubbers for the control of secondary emissions shall use methods that meet the intent of the sampling requirements of Method 14 in appendix A to part 60 of this chapter and that are approved by the State. Sample analysis shall be performed using Method 13A or Method 13B in appendix A to part 60 of this chapter for TF, Method 315 in appendix A to this part for POM, or an approved alternative method.

(c) Except as provided in § 63.845(g)(1), references to ''potroom'' or ''potroom group'' in Method 14 in appendix A to part 60 of this chapter shall be interpreted as ''potline'' for the purposes of this subpart.

(d) For sampling using Method 14 in appendix A to part 60 of this chapter, the owner or operator shall install one Method 14 manifold per potline in a potroom that is representative of the entire potline, and this manifold shall meet the installation requirements specified in section 2.2.1 of Method 14 in appendix A to part 60 of this chapter.

(e) The owner or operator may use an alternative test method for TF or POM emissions providing:

(1) The owner or operator has already demonstrated the equivalency of the alternative method for a specific plant and has received previous approval from the Administrator or the applicable regulatory authority for TF or POM measurements using the alternative method; or

(2) The owner or operator demonstrates to the satisfaction of the applicable regulatory authority that the results from the alternative method meet the criteria specified in §§ 63.848(d)(1) and (d)(3) through (d)(6). The results from the alternative method shall be based on simultaneous sampling using the alternative method and the following reference methods:

(i) For TF, Methods 13 and 14 or Method 14A in appendix A to part 60 of this chapter; or

(ii) For POM, Method 315 in appendix A to this part and Method 14 in appendix A to part 60 of this chapter.

§ 63.850 Notification, reporting, and recordkeeping requirements.

(a) *Notifications.* The owner or operator shall submit the following written notifications:

(1) Notification for an area source that subsequently increases its emissions such that the source is a major source subject to the standard;

(2) Notification that a source is subject to the standard, where the initial startup is before the effective date of the standard;

(3) Notification that a source is subject to the standard, where the source is new or has been reconstructed, the initial startup is after the effective date of the standard, and for which an application for approval of construction or reconstruction is not required;

(4) Notification of intention to construct a new major source or reconstruct a major source; of the date construction or reconstruction commenced; of the anticipated date of startup; of the actual date of startup, where the initial startup of a new or reconstructed source occurs after the effective date of the standard, and for which an application for approval of construction or reconstruction is required [see §§ 63.9(b)(4) and (b)(5)];

(5) Notification of initial performance test;

(6) Notification of initial compliance status;

(7) One-time notification for each affected source of the intent to use an HF continuous emission monitor; and

(8) Notification of compliance approach. The owner or operator shall develop and submit to the applicable regulatory authority, if requested, an engineering plan that describes the techniques that will be used to address the capture efficiency of the reduction cells for gaseous hazardous air pollutants in compliance with the emission limits in §§ 63.843, 63.844, and 63.846.

(b) *Performance test reports.* The owner or operator shall report the results of the initial performance test as part of the notification of compliance status required in paragraph (a)(6) of this section. Except as provided in paragraph (d) of this section, the owner or operator shall submit a summary of all subsequent performance tests to the applicable regulatory authority on an annual basis.

(c) *Startup, shutdown, and malfunction plan and reports.* The owner or operator shall develop and implement a written plan as described in § 63.6(e)(3) that contains specific procedures to be followed for operating the source and maintaining the source during periods of startup, shutdown, and malfunction and a program of corrective action for malfunctioning process and control systems used to comply with the standard. The plan does not have to be submitted with the permit appplication or included in the operating permit. The permitting authority may review the plan upon request. In addition to the information required in § 63.6(e)(3), the plan shall include:

(1) Procedures, including corrective actions, to be followed if a monitoring device measures an operating parameter outside the limit(s) established under § 63.847(h), if visible emissions from an exhaust stack indicating abnormal operation of a control device are observed by the owner or operator during the daily inspection required in § 63.848(g), or if a problem is detected during the daily inspection of a wet roof scrubber for potline secondary emission control required in § 63.848(f)(5)(ii); and

(2) The owner or operator shall also keep records of each event as required by § 63.10(b) and record and report if an action taken during a startup, shutdown, or malfunction is not consistent with the procedures in the plan as described in § 63.6(e)(3)(iv).

(d) *Excess emissions report.* As required by § 63.10(e)(3), the owner or operator shall submit a report (or a summary report) if measured emissions are in excess of the applicable standard. The report shall contain the information specified in § 63.10(e)(3)(v) and be submitted semiannually unless quarterly reports are required as a result of excess emissions.

(e) *Recordkeeping.* The owner or operator shall maintain files of all information (including all reports and notifications) required by § 63.10(b) and by this subpart.

(1) The owner or operator must retain each record for at least 5 years following the date of each occurrence, measurement, maintenance, corrective action, report, or record. The most recent 2 years of records must be retained at the facility. The remaining 3 years of records may be retained offsite;

(2) The owner or operator may retain records on microfilm, on a computer, on computer disks, on magnetic tape, or on microfiche;

(3) The owner or operator may report required information on paper or on a labeled computer disc using commonly available and compatible computer software; and

(4) In addition to the general records required by § 63.10(b), the owner or operator shall maintain records of the following information:

(i) Daily production rate of aluminum;

(ii) Daily production rate of green anode material placed in the anode bake furnace;

(iii) A copy of the startup, shutdown, and malfunction plan;

(iv) Records of design information for paste production plant capture systems;

(v) Records of design information for an alternative emission control device for a paste production plant;

(vi) Records supporting the monitoring of similar potlines demonstrating that the performance of similar potlines is the same as or better than that of potlines sampled by manual methods;

(vii) Records supporting a request for reduced sampling of potlines;

(viii) Records supporting the correlation of emissions measured by a continuous emission monitoring system to emissions measured by manual methods and the derivation of the alternative emission limit derived from the measurements;

(ix) The current implementation plan for emission averaging and any subsequent amendments;

(x) Records, such as a checklist or the equivalent, demonstrating that the daily inspection of a potline with wet roof scrubbers for secondary emission control has been performed as required in § 63.848(f)(5)(ii), including the results of each inspection;

(xi) Records, such as a checklist or the equivalent, demonstrating that the daily visual inspection of the exhaust stack for each control device has been performed as required in § 63.848(g), including the results of each inspection;

(xii) For a potline equipped with an HF continuous emission monitor,

records of information and data required by § 63.10(c);

(xiii) Records documenting the corrective actions taken when the limit(s) for an operating parameter established under § 63.847(h) were exceeded, when visible emissions indicating abnormal operation were observed from a control device stack during a daily inspection required under § 63.848(g), or when a problem was detected during the daily inspection of a wet roof scrubber for potline secondary control required in § 63.848(f)(5)(ii);

(xiv) Records documenting any POM data that are invalidated due to the installation and startup of a cathode; and

(xv) Records documenting the portion of TF that is measured as particulate matter and the portion that is measured as gaseous when the particulate and gaseous fractions are quantified separately using an approved test method.

§ 63.851 Regulatory authority review procedures.

(a) The applicable regulatory authority shall notify the owner or operator in writing of the need for additional time to review the submissions in paragraphs (a)(1) through (a)(5) of this section or of approval or intent to deny approval of the submissions in paragraphs (a)(1) through (a)(5) of this section within 60 calendar days after receipt of sufficient information to evaluate the submission. The 60-day period begins after the owner or operator has been notified that the submission is complete.

(1) The test plan in § 63.847(b);

(2) Request to change limits for operating parameters in § 63.847(h)(3);

(3) Request for similar potline monitoring in § 63.848(d)(5);

(4) Request for reduced sampling frequency in § 63.848(e); and

(5) Request for an alternative method in § 63.849(e)(2).

(b) The applicable regulatory authority shall notify the owner or operator in writing whether the submission is complete within 30 calendar days of receipt of the original submission or within 30 days of receipt of any supplementary information that is submitted. When a submission is incomplete, the applicable regulatory authority shall specify the information needed to complete the submission and shall give the owner or operator 30 calendar days after receipt of the notification to provide the information.

§ 63.852 Applicability of general provisions.

The requirements of the general provisions in subpart A of this part that are not applicable to the owner or operator subject to the requirements of this subpart are shown in appendix A of this subpart.

§ 63.853 Delegation of authority.

In delegating implementation and enforcement authority to a State under section 112(d) of the Act, all authorities are transferred to the State.

§§ 63.854–63.859 [Reserved]

TABLE 1 TO SUBPART LL—POTLINE TF LIMITS FOR EMISSION AVERAGING

Type	Monthly TF limit (1b/ton) [for given number of potlines]						
	2 lines	3 lines	4 lines	5 lines	6 lines	7 lines	8 lines
CWPB1	1.7	1.6	1.5	1.5	1.4	1.4	1.4
CWPB2	2.9	2.8	2.7	2.7	2.6	2.6	2.6
CWPB3	2.3	2.2	2.2	2.1	2.1	2.1	2.1
VSS1	2	1.9	1.8	1.7	1.7	1.7	1.7
VSS2	2.6	2.5	2.5	2.4	2.4	2.4	2.4
HSS	2.5	2.4	2.4	2.3	2.3	2.3	2.3
SWPB	1.4	1.3	1.3	1.2	1.2	1.2	1.2

TABLE 2 TO SUBPART LL—POTLINE POM LIMITS FOR EMISSION AVERAGING

Type	Quarterly POM limit (lb/ton) [for given number of potlines]						
	2 lines	3 lines	4 lines	5 lines	6 lines	7 lines	8 lines
HSS	4.1	3.8	3.7	3.5	3.5	3.4	3.3
VSS1	2.1	2.0	1.9	1.9	1.8	1.8	1.8
VSS2	3.2	3.0	2.9	2.9	2.8	2.8	2.7

TABLE 3 TO SUBPART LL—ANODE BAKE FURNACE LIMITS FOR EMISSION AVERAGING

Number of furnaces	Emission limit (lb/ton of anode)	
	TF	POM
2	0.11	0.17
3	0.090	0.17
4	0.077	0.17
5	0.070	0.17

APPENDIX A TO SUBPART LL—APPLICABILITY OF GENERAL PROVISIONS

[40 CFR part 63, subpart A to Subpart LL]

General provisions citation	Requirement	Applies to subpart LL	Comment
63.1(c)(2)		No	All are major sources.
63.2 Definition of ''reconstruction''		No	Subpart LL defines ''reconstruction.''
63.6(c)(1)	Compliance date for existing sources.	No	Subpart LL specifies compliance date for existing sources.
63.6(h)	Opacity/VE standards	Only in § 63.845	Opacity standards applicable only when incorporating the NSPS requirements under § 63.845.
63.8(c)(4)–(c)(8)	CMS operation and maintenance	No	Subpart LL does not require COMS/CMS or CMS performance specifications.
63.8(d)	Quality control	No	Subpart LL does not require CMS or CMS performance evaluation.
63.8(e)	Performance evaluation for CMS	No	
63.9(e)	Notification of performance test	No	Subpart LL specifies notification of performance tests.
63.9(f)	Notification of VE or opacity test	Only in § 63.845	Notification is required only when incorporating the NSPS requirements under § 63.845.
63.9(g)	Additional CMS notification	No	
63.10(d)(2)	Performance test reports	No	Subpart LL specifies performance test reporting.
63.10(d)(3)	Reporting VE/opacity observations	Only in § 63.845	Reporting is required only when incorporating the NSPS requirements under § 63.845.
63.10(e)(2)	Reporting performance evaluations	No	Subpart LL does not require performance evaluation for CMS.
63.11(a)–(b)	Control device requirements	No	Flares not applicable.

9. Appendix A to part 63 is amended by adding, in numerical order, Method 315 to read as follows:

Appendix A to Part 63—Test Methods

* * * * *

Method 315—Determination of Particulate and Methylene Chloride Extractable Matter (MCEM) From Selected Sources at Primary Aluminum Production Facilities

Note: This method does not include all of the specifications (e.g., equipment and supplies) and procedures (e.g., sampling and analytical) essential to its performance. Some material is incorporated by reference from other methods in this part. Therefore, to obtain reliable results, persons using this method should have a thorough knowledge of at least the following additional test methods: Method 1, Method 2, Method 3, and Method 5 of 40 CFR part 60, appendix A.

1.0 Scope and Application.

1.1 Analytes. Particulate matter (PM). No CAS number assigned. Methylene chloride extractable matter (MCEM). No CAS number assigned.

1.2 Applicability. This method is applicable for the simultaneous determination of PM and MCEM when specified in an applicable regulation. This method was developed by consensus with the Aluminum Association and the U.S. Environmental Protection Agency (EPA) and has limited precision estimates for MCEM; it should have similar precision to Method 5 for PM in 40 CFR part 60, appendix A since the procedures are similar for PM.

1.3 Data quality objectives. Adherence to the requirements of this method will enhance the quality of the data obtained from air pollutant sampling methods.

2.0 Summary of Method.

Particulate matter and MCEM are withdrawn isokinetically from the source. PM is collected on a glass fiber filter maintained at a temperature in the range of l20 ± 14 °C (248 ± 25 °F) or such other temperature as specified by an applicable subpart of the standards or approved by the Administrator for a particular application. The PM mass, which includes any material that condenses on the probe and is subsequently removed in an acetone rinse or on the filter at or above the filtration temperature, is determined gravimetrically after removal of uncombined water. MCEM is then determined by adding a methylene chloride rinse of the probe and filter holder, extracting the condensable hydrocarbons collected in the impinger water, adding an acetone rinse followed by a methylene chloride rinse of the sampling train components after the filter and before the silica gel impinger, and determining residue gravimetrically after evaporating the solvents.

3.0 Definitions. [Reserved]

4.0 Interferences. [Reserved]

5.0 Safety.

This method may involve hazardous materials, operations, and equipment. This method does not purport to address all of the safety problems associated with its use. It is the responsibility of the user of this method to establish appropriate safety and health practices and determine the applicability of regulatory limitations prior to performing this test method.

6.0 Equipment and Supplies.

Note: Mention of trade names or specific products does not constitute endorsement by the EPA.

6.1 Sample collection. The following items are required for sample collection:

6.1.1 Sampling train. A schematic of the sampling train used in this method is shown in Figure 5–1, Method 5, 40 CFR part 60, appendix A. Complete construction details are given in APTD–0581 (Reference 2 in section 17.0 of this method); commercial models of this train are also available. For changes from APTD–0581 and for allowable modifications of the train shown in Figure 5–1, Method 5, 40 CFR part 60, appendix A, see the following subsections.

Note: The operating and maintenance procedures for the sampling train are described in APTD–0576 (Reference 3 in section 17.0 of this method). Since correct usage is important in obtaining valid results, all users should read APTD–0576 and adopt the operating and maintenance procedures outlined in it, unless otherwise specified herein. The use of grease for sealing sampling train components is not recommended because many greases are soluble in methylene chloride. The sampling train consists of the following components:

6.1.1.1 Probe nozzle. Glass or glass lined with sharp, tapered leading edge. The angle of taper shall be ≤30°, and the taper shall be on the outside to preserve a constant internal diameter. The probe nozzle shall be of the button-hook or elbow design, unless otherwise specified by the Administrator. Other materials of construction may be used, subject to the approval of the Administrator. A range of nozzle sizes suitable for isokinetic sampling should be available. Typical nozzle

APPENDIX B

DESCRIPTION OF THE PROCESS AND EMISSION POINTS

APPENDIX B. DESCRIPTION OF THE PROCESS AND EMISSION POINTS

This appendix provides an overview of the processes found at primary aluminum plants and concludes with a description of the pollutants and emission points affected by this rule.

B.1 WHAT IS IN A PRIMARY ALUMINUM PLANT?

The major components of a primary aluminum plant are:

- shipping and receiving areas for raw materials and finished product;
- one or more potlines where alumina (Al_2O_3) is reduced into aluminum in a cryolite (Na_3AlF_6) electrolytic bath;
- a cast house where the aluminum is reheated and purified, its characteristics are modified to meet various specifications, and it is cast into solid forms including ingots and billets, or transported in a molten state;
- a rectifier for converting alternating current (AC) voltage into the direct current (DC) voltage used in the reduction process;
- maintenance and repair facilities;
- an anode paste plant, where coke and pitch are mixed to form anode paste, briquettes, or green anodes; and
- an anode bake plant (located only at facilities using the prebake process).

A simplified diagram of a typical Soderberg plant showing material flow patterns is provided in Figure B-1. Similarly, Figure B-2 shows a simplified schematic of the process operations performed in a typical prebake plant. **The processes labeled "secondary operations" in the figure are not covered by subpart LL**; these sources will be addressed in a separate MACT rulemaking.

The sequence of process operations is paste production, anode baking (for prebake processes only because the anode is baked in place in the Soderberg process), and primary aluminum prodcution in groups of reduction cells called potlines.

B.2 WHAT HAPPENS IN PASTE PRODUCTION?

The anode paste plant is termed the "green mill" by the industry and may produce anode paste for Soderberg cells, cathode paste, or green pressed anodes to be baked for prebake cells. Carbon paste production consists of the following processes:

- crushing;
- grinding;
- screening and classifying;
- combining of carefully sized fractions with a pitch binder; and
- mixing and forming.

Figure B-3 shows a typical flowsheet for a Soderberg paste production plant and Figure B-4 shows a typical flowsheet for the prebake paste and green anode production.

Solid raw materials (calcined petroleum coke, anthracite coal, and solid pitch, as required for various kinds of paste mixes) are received in bulk and transported to carbon plant storage. Material is reclaimed from storage by front-end loaders with enclosed cabs, airslide, or conveyors and fed to combinations of crushing equipment in closed circuit with vibrating screens followed by grinding units. Sized fractions of crushed and ground material are separated and stored in mix bins for make-up of paste composition. Cleaned reclaimed spent anodes and anode scrap from prebake plant operations are similarly crushed and sized for recycle to prebake anode preparation.

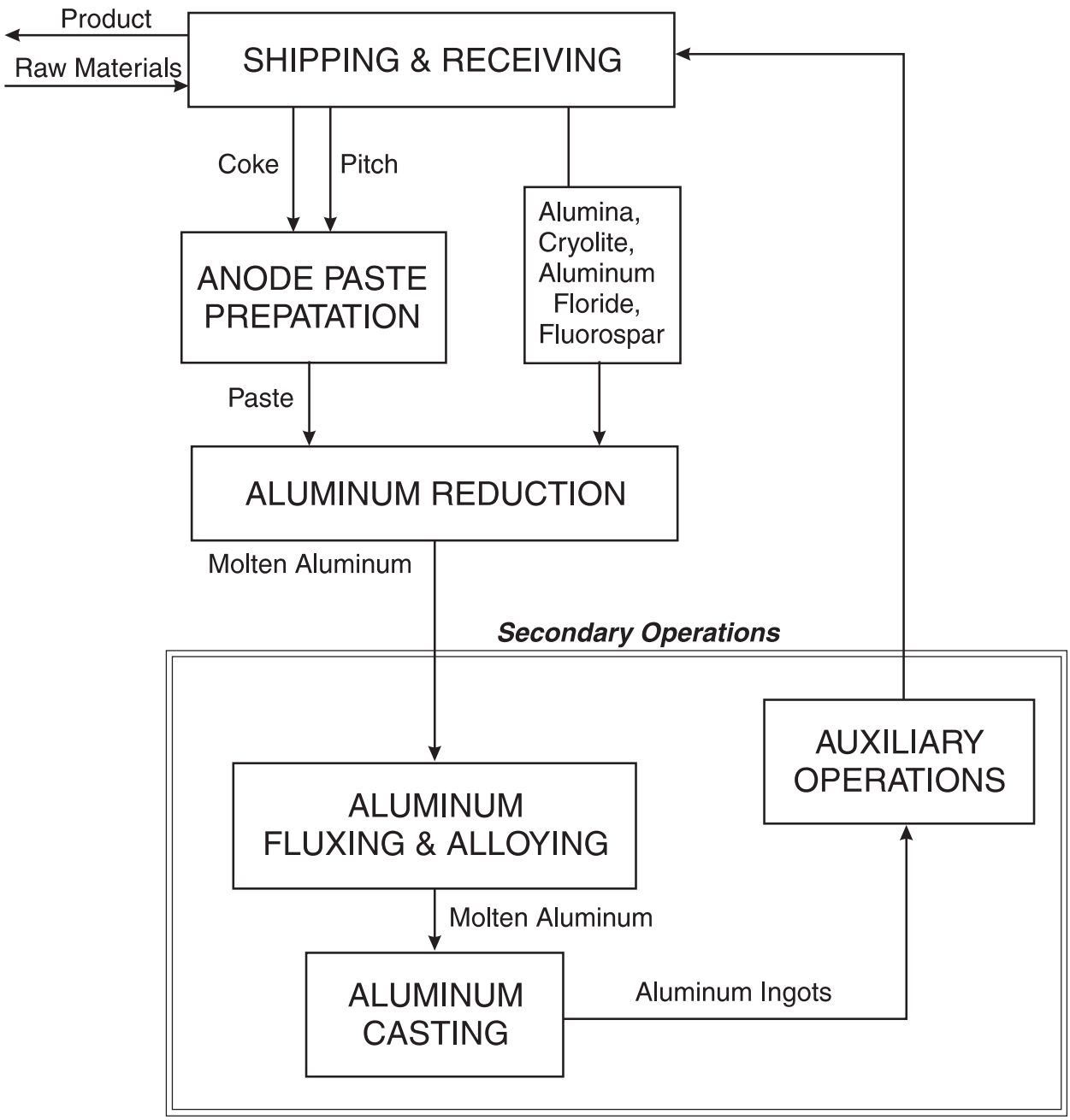

FIGURE B-1. PROCESS FLOW DIAGRAM FOR A SODERBERG PLANT

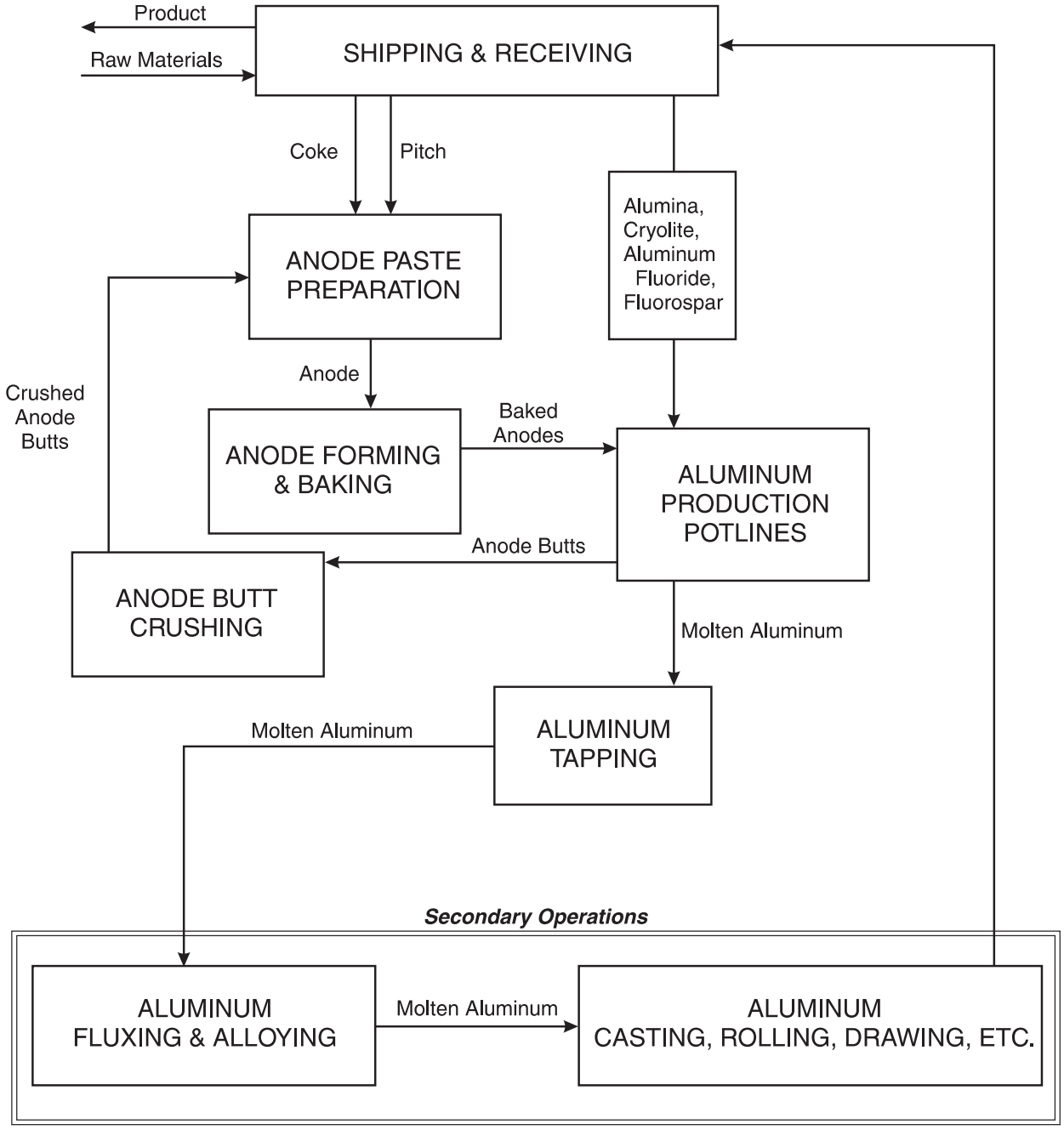

FIGURE B-2. PROCESS FLOW DIAGRAM FOR A PREBAKE PLANT

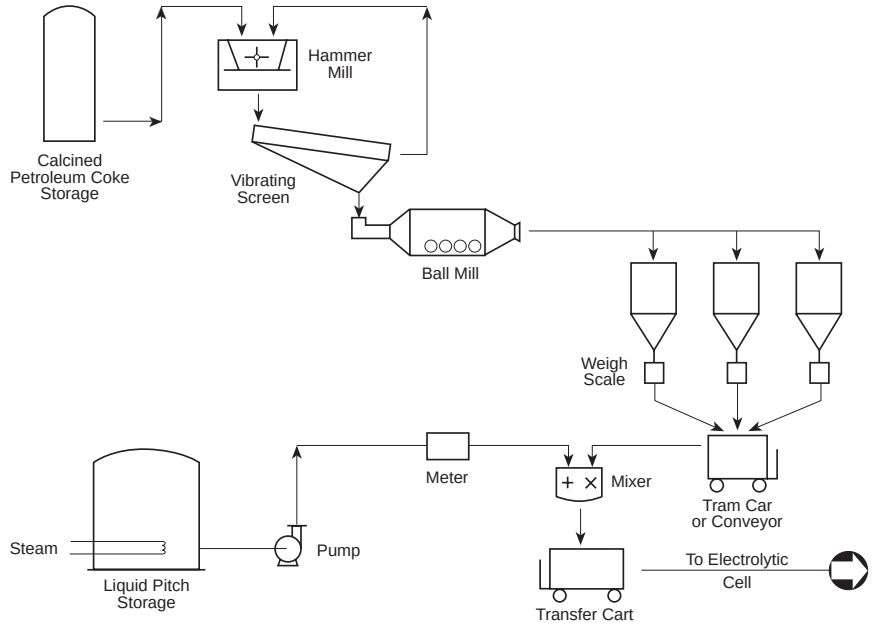

FIGURE B-3. SCHEMATIC OF SODERBERG PASTE PLANT

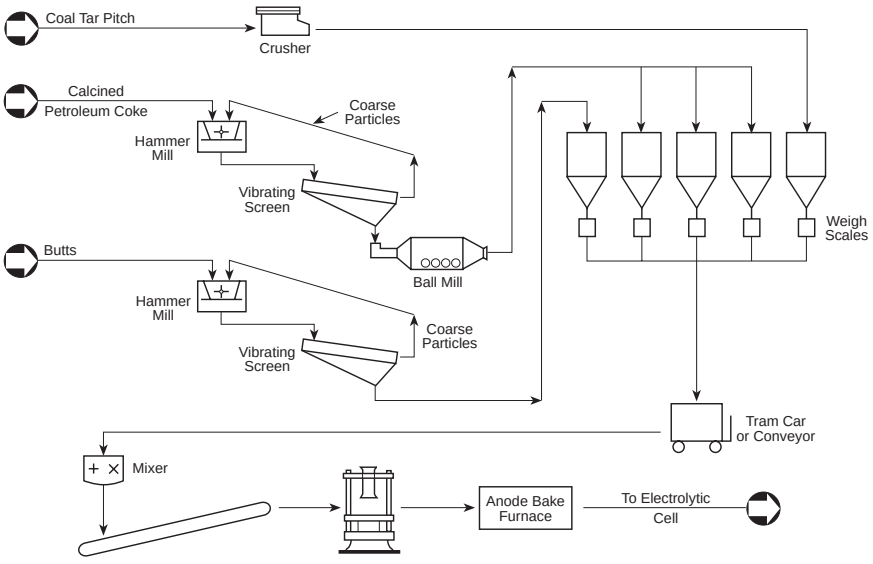

FIGURE B-4. SCHEMATIC OF PREBAKE ANODE PREPARATION

Dry solids are drawn from the sized mix bins in controlled proportions either in weighed batches for batch mixers or continuously for continuous mixers. Mixers are jacketed and heated with either steam or hot oil. For baked anode pastes the mixer feed contains either solid crushed coal tar pitch, which is softened and blended in the mixers or hot liquid pitch to provide the paste binder.

For Soderberg paste, a liquid pitch is used and is metered to the mixers. The hot Soderberg paste is discharged directly from the batch mixers to transfer cars that convey it to the cell rooms for anode replenishment, or may be cooled and formed into briquettes. Briquettes are conveyed by conveyor belts, trucks, or front-end loaders. The prebake paste, less fluid than the Soderberg material, is transferred from the mixers to anode molds, in which the self-supporting green anode is formed by hydraulic or vibratory compaction.

B.3 WHAT IS ANODE BAKING?

Anode bake furnaces (used only at prebake plants) vary greatly in size and production rate, but all have the same basic layout and operating parameters. Figure B-5 shows a typical ring furnace used for anode baking. Each furnace consists of a large number of indirectly fired sunken ovens or pits arranged in rows. The pits are open-topped and made of brick. Some of the spaces between the bricks are mortared, while others are intentionally left open. The pits sit in a flue which surrounds them. The flue is split down the middle by a wall. The wall is slightly shorter than the flue to permit the flue gases to pass from one side to the other at each end. A large pipe or duct circles the furnace and leads to an exhaust fan. Double-sealed manholes are spaced along the top of this duct, with at least one manhole per furnace section. Each one-half row of pits, from the center wall out, is called a section.

An operating furnace will have one or more "fires" operating continuously. A fire has three phases: preheat, bake, and cool-down. Each fire gradually traverses the length of the furnace on one side in a series of steps, one section per step. It then returns on the other side. Ahead of the fire(s), pits are filled with green anodes to within about 3 feet of the surface. Petroleum coke is then dumped into the pits from an overhead hopper and packed around the anodes. The anodes are then covered with petroleum coke or some other insulating material to cover the tops of the pits. After the fire has passed by and the baked anodes have cooled, the packing coke is removed from the pits by vacuuming or other means, and reused. The baked anodes are then removed and necessary pit repairs are performed while the pits are empty.

B.4 HOW IS ALUMINUM MADE?

Primary aluminum is produced by the reduction of alumina by electrolysis in a molten bath of natural or synthetic cryolite (Na_3AlF_6), which serves as an electrolyte and as a solvent for the alumina. The reduction cells or pots containing the bath are about 10 to 15 feet wide, 20 to 40 feet long, and about 3 to 4 feet deep, lined with carbon, and connected in electrical series of 100 to 240 cells to form a **potline**. From 800 to 3,000 pounds of aluminum metal are produced per day in each pot. The carbon lining is in contact with the molten aluminum metal and serves as the cathode.

An aluminum reduction potline is typically housed in one or two long, narrow buildings called potrooms. A potline is made up of a series of electrically connected cells called aluminum reduction pots. The pots are shallow, rectangular vessels that may be lined up side-by-side or end-to-end in one or more rows down the center of the potroom. The pots are large heat sources; consequently, the potrooms are ventilated to maintain reasonable working conditions and to help with proper pot operation. Usually this ventilation air enters at the sides of a potroom and exits through roof

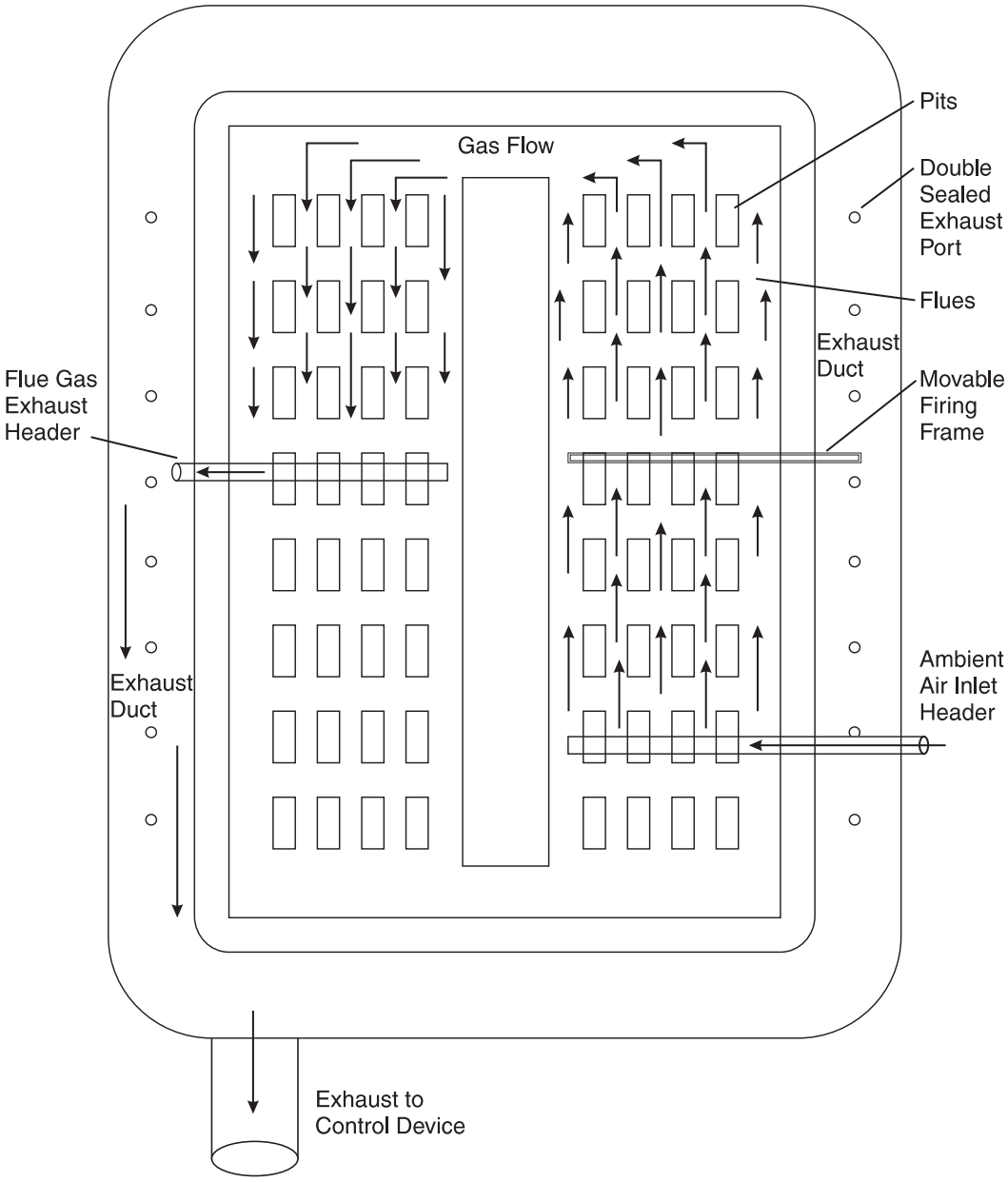

FIGURE B-5. RING FURNACE LAYOUT

vents (roof monitors). This ventilation is the major source of potroom fugitive emissions.

Primary aluminum operations are differentiated by the type of anode used, the method by which the pot is worked, and the method by which the anode is introduced into the cell. There are two major types of processes: prebake and Soderberg. A majority of the primary aluminum plants in the U.S. currently use prebake technology (17 of 23 plants).

The pots in prebake plants use multiple anodes that are formed and baked prior to consumption in the pots, while the Soderberg pots use a single, continuous anode that is shaped and baked in place directly in the pot. Each of these pot types has two variations. The pots in prebake plants are classified as center-worked prebake (CWPB) or side-worked prebake (SWPB), depending on where the pot working (crust breaking and alumina addition) takes place. Soderberg pots, on the other hand, are differentiated by the positioning of the current-carrying studs in the anodes, which may be inserted vertically or horizontally. The four basic types of primary aluminum reduction technology are illustrated in Figure B-6 and include:

1. Center-work prebake (CWPB)
2. Side-work prebake (SWPB)
3. Vertical stud Soderberg (VSS)
4. Horizontal stud Soderberg (HSS)

In the Soderberg method, a reinforced rectangular steel shell, approximately 3 to 5 feet high and open at the top and bottom, is suspended above the pot. The carbon mass (coke and pitch) of paste or briquettes within the shell forms the anode and is added periodically as the anode is consumed. Current enters the anode through rows of pins inserted into the carbon mass either vertically or horizontally. The heat of the bath and the heat resulting from the electrical resistance of the carbon bake the anode paste so that it becomes a hard monolithic mass from the surface of the electrolyte to a point approximately 20 inches above the bath. As the carbon anode is consumed and additional carbon descends through the rectangular steel shell and is consumed, the lowest pins are withdrawn and replaced at higher levels in the carbon mass.

In the prebaked anode system, sets of 16 to 24 prebaked carbon blocks are used for the anode. The size of the blocks varies from plant to plant; typical blocks are about 20 inches wide, about 30 inches long, and 12 to 18 inches high. They weigh 400 to 600 pounds. Steel studs or rods, which suspend the block in the bath and conduct the current to the carbon, are sealed in the anode block by pouring molten iron around the rod and allowing it to solidify. The anode blocks are raised or lowered to maintain proper position with respect to the metal levels in the cell. When consumed, anode blocks are replaced.

Periodically, the aluminum is removed from the pots by a process called "tapping" and transferred, still molten, to the cast house in crucibles. There it is placed in a holding furnace, alloyed with other materials (iron, silicon, magnesium, and manganese), and fluxed (generally with chlorine or argon) to remove impurities. The purified alloyed aluminum, still molten, is then direct chilled cast into ingots, billets, or slabs. Unalloyed molten aluminum is poured into "sow" molds to cool. After cooling, the aluminum products are transferred to storage or prepared for shipment.

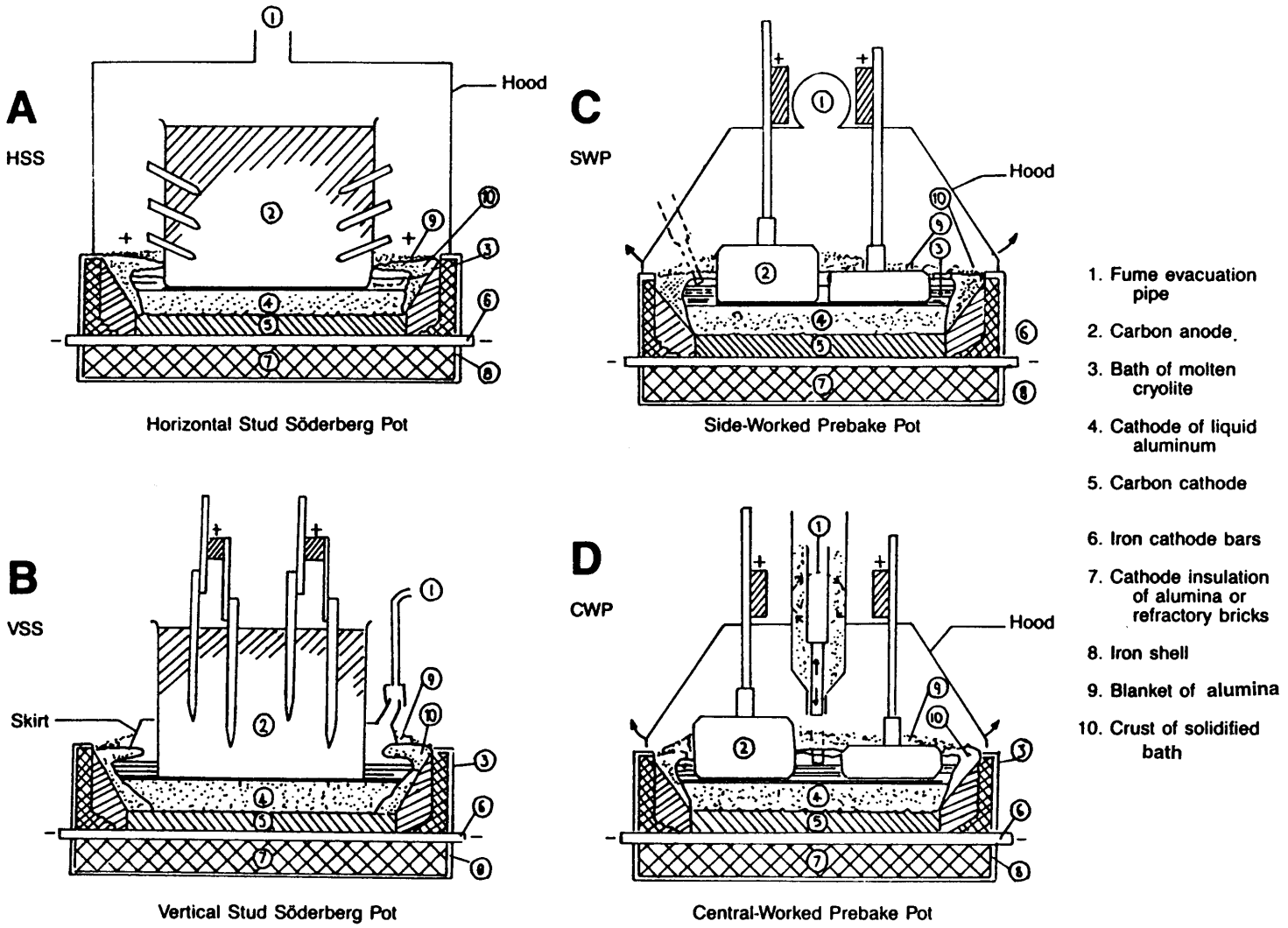

FIGURE B-6. SCHEMATICS OF TYPES OF REDUCTION CELLS ("POTS")

B.5 WHAT ARE THE HAPs AND EMISSION POINTS?

One of the major HAP of concern is a family of compounds collectively called POM. These compounds enter the process with the pitch, which is derived from the tar produced as a by-product at plants that distill coal to produce coke. The pitch enters the process as either a solid or as a heated viscous liquid. POM emissions occur from **pitch storage tanks** when the liquid is pumped into the tank and when it is heated to keep it fluid.

POM emissions also occur from the paste production plant as the heated pitch is transferred and combined with petroleum coke to make green anodes or paste. The emissions occur wherever heated pitch is handled, including **day tanks for pitch storage, mixers, formers, and transfer systems**. The rule requires that these emission points be enclosed and evacuated to a dry coke scrubber or alternative control device to control POM emissions.

P**OM emissions occur from the anode bake furnace** when the green anodes are exposed to high temperatures. In addition, **HF emissions** occur because fluoride is introduced into the bake furnace from fluoride compounds that adhere to "anode butts", which are the remnants of anodes that are recycled after they have been replaced in the reduction cell. The fluoride that leaves the bake furnace is primarily in the form of HF. The emissions of POM and HF at most bake furnaces are controlled by the use of dry alumina scrubbers.

Fluoride emissions (both in gaseous and particulate form) occur from the reduction cells and are termed "secondary emissions" (fugitive) and "primary emissions " (from the control device). The vast majority of the fluoride that evolves from the cell or pot is captured and recovered for recycle by the emission control system, usually a dry alumina scrubber. The fugitive or secondary emissions that escape from the cell are usually emitted through the roof. A few plants use wet roof scrubbers to control these secondary emissions.

In addition to fluoride, **POM is emitted from Soderberg potlines**. The source of the POM is the anode paste that is baked in place in the reduction cell. In contrast, POM emissions from prebake potlines are minimal because the anodes have been "prebaked" in the anode bake furnace.

APPENDIX C

SITE-SPECIFIC TEST PLAN OUTLINE

DRAFT OUTLINE FOR SITE-SPECIFIC TEST PLAN

Introduction

This section simply includes a description of what the plan is for and the specific tests to be conducted at the facility. The scope of the plan should include both initial compliance tests and ongoing compliance testing. The intent to use any previous emissions data collected at the facility could also be noted in the introduction.

Test Description and Schedule

This section should give a brief description of overall plant operations and then describe and the specific sources to be sampled under the performance test plan. Also include a description of the control equipment used at each source to comply with the rule.

Provide a table or "test matrix" showing each source to be tested , the "initial" tests to be performed, the on-going tests to be performed, the frequency of testing, the duration of each test and the sampling and analytical methods to be used at each specific source.

Describe the approach that will be used to ensure that one test run on the roof monitor is performed before15th of each month, one test run is performed after the 15th of each month and that there are no less than 6 days between any 2 test runs conducted in the same month.

Describe rationale for the number of stacks. The rule requires testing of a "representative number of the stacks" satisfactory to the regulatory authority.

Summarize any past compliance test data we intend to use in demonstrating initial compliance. Any data collected with EPA approved alternate or reference methods up to 12 months before the compliance date may be used.

Sampling Locations

[Note: Information on sampling locations is not specifically required by the rule or General Provisions; however, it is useful information that is often included in test plans.]

Provide detailed descriptions of each location to be used for emissions testing. The following information should be provided for each location as appropriate:

- sampling port size and location;
- stack shape (circular or rectangular) and dimensions;
- distances to upstream and downstream flow disturbances;
- number and location of traverse points required at each sampling location per EPA Methods 1 and 2; and
- sampling location access and safety considerations.

Sampling location descriptions should be provided for the following sources as applicable:

Method 14 manifold, dry alumina scrubbers, pitch storage tanks, wet scrubbers, electrostatic precipitators.

Sampling/Analytical Procedures

Provide a brief summary of the test methods to be used for compliance testing. Attach a copy of the reference or approved alternate methods to the test plan as an appendix:

Method 14
Method 13A and 13B
Method 14A (Alcan Cassette Method)
Method 315
HF CEM

Data Quality Objectives

Provide table summary of data quality objectives for each test method. The table needs to include the basis on which the data quality objective will be evaluated. For example, accuracy and precision of fluoride analyses may be evaluated based on matrix spike and matrix spike duplicate analyses.

Sample Custody Procedures

Describe procedures to be used for the proper labeling of samples and for transportation of samples to the laboratory.

Internal Quality Control and Quality Assurance Checks

Describe procedures to be used for calibration of field sampling and laboratory analytical equipment. This would include calibration of dry gas meters, thermocouples, probe nozzles, etc. for stack sampling, as well as calibration of analytical balances and ion selective electrodes use in the laboratory. The internal QA/QC program also needs to describe procedures to be used for determining measurement accuracy and precision, such as regular analysis of a fluoride QC sample, analysis of matrix spike and matrix spike duplicates, and duplicate analysis of selected stack samples.

External Quality Assurance

This section should describe our intent to request Method 13 total fluoride and Method 315 total POM performance audit ("blind") samples from EPA at least 45 days prior to the test date and analyze these samples with stack samples collected during the initial performance test. Results from the performance audit samples will be used by EPA to independently assess test data accuracy and precision.

TECHNICAL REPORT DATA

1. REPORT NO.	2.	3. RECIPIENT'S ACCESSION NO.
EPA-453/R-99-011		

4. TITLE AND SUBTITLE	5. REPORT DATE
Plain Language Guide to the Primary Aluminum NESHAP -- 40 CFR Part 63, Subpart LL	October 1999 6. PERFORMING ORGANIZATION CODE
7. AUTHOR(S) Steve Fruh, EPA/OAQPS/ESD/PPSG Marsha Branscome, Research Triangle Institute	8. PERFORMING ORGANIZATION REPORT NO.
9. PERFORMING ORGANIZATION NAME AND ADDRESS Research Triangle Institute 3040 Cornwallis Road P.O. Box 12194	10. PROGRAM ELEMENT NO. 11. CONTRACT/GRANT NO. 68D60014
12. SPONSORING AGENCY NAME AND ADDRESS Office of Air Quality Planning and Standards Office of Air and Radiation U.S. Environmental Protection Agency	13. TYPE OF REPORT AND PERIOD COVERED Final 14. SPONSORING AGENCY CODE EPA/200/04

15. SUPPLEMENTARY NOTES

Project Officer is Carolyn Wigington, Mail Drop 13 (919-541-5374)
Task Order Project Officer is Steve Fruh, Mail Drop 13 (919-541-2837)

16. ABSTRACT

National emissions standards to control emissions of HAP from major sources at primary aluminum reduction plants were published in *Federal Register* 10/7/97, 63 FR 52407. This document contains information to help State and local agencies for air pollution control, as well as the regulated community, carry out these standards. The document summarizes the NESHAP requirements and provides example calculations, inspection checklists, and example notification and reporting forms. The document also provides information on where to submit reports, go to for additional help, and applicability of requirements in the NESHAP General Provisions and Title V of the Clean Air Act. A copy of the rule is provided in hard copy format. An electronic version of this document can be downloaded at *www.epa.gov/ttn/uatw* under Rules and Implementation, Primary Aluminum..

17. KEY WORDS AND DOCUMENT ANALYSIS

a. DESCRIPTORS		b. IDENTIFIERS/OPEN ENDED TERMS	c. COSATI
Air pollution	Title III	Air pollution control	
Air pollution control	NESHAP	Aluminum	
National emissions standards	Compliance	Anode bake furnace	
Hazardous air pollutants	40 CFR Part 63	Paste production plant	
Primary aluminum	Subpart LL	Potline	

18. DISTRIBUTION STATEMENT	19. SECURITY CLASS *(Report)*	21. NO. OF PAGES
Unlimited	Unclassified	138 (hard copy) 125 (UATW)
	20. SECURITY CLASS *(Page)*	22. PRICE
	Unclassified	no cost