AP-42
Fourth Edition
September 1985

COMPILATION OF AIR POLLUTANT EMISSION FACTORS

Volume I: Stationary Point And Area Sources

U.S. ENVIRONMENTAL PROTECTION AGENCY
Office Of Air And Radiation
Office Of Air Quality Planning And Standards
Research Triangle Park, North Carolina 27711

September 1985

For sale by the Superintendent of Documents, U.S. Government Printing Office
Washington, DC 20402

This report has been reviewed by The Office of Air Quality Planning And Standards, U. S. Environmental Protection Agency, and has been approved for publication. Mention of trade names or commercial products is not intended to constitute endorsement or recommendation for use.

Volume I

PUBLICATIONS IN SERIES

Issue	Date
COMPILATION OF AIR POLLUTANT EMISSION FACTORS (Fourth Edition)	9/85

PREFACE TO THE FOURTH EDITION

VOLUME I: STATIONARY POINT AND AREA SOURCES

Compilation of Air Pollutant Emission Factors, AP-42, reports data on emissions of atmospheric pollutants for which sufficient information exists to establish realistic emission factors. The information herein is based on Public Health Service Publication 999-AP-42, Compilation Of Air Pollutant Emission Factors, by R. L. Duprey, and on three ensuing revised and expanded editions of Compilation Of Air Pollutant Emission Factors as published by the U. S. Environmental Protection Agency in February 1972, April 1973 and February 1976.

The present document comprises the Third Edition and all Supplements issued since it appeared in February 1976. Also included here are seven newly revised Sections of AP-42, with information recently developed for AP-42 users. These new data will be found in the following:

Section 4.3	Storage Of Organic Liquids
Section 4.4	Transportation And Marketing Of Petroleum Liquids
Section 8.11	Glass Fiber Manufacturing
Section 8.19	Construction Aggregate Processing
Section 11.2.1	Unpaved Roads
Section 11.2.5	Paved Urban Roads
Section 11.2.6	Industrial Paved Roads

Chapters and Sections of this document are arranged in a format that permits easy and convenient replacement of material, whenever information reflecting more accurate and refined emission factors should be published and distributed. For easy addition of any future materials, the loose leaf format continues to be used. This approach permits the document to be placed in a ring binder or to be secured by rings, rivets or other fasteners. A bottom corner of each page bears the date the information was issued.

For the Fourth Edition, stationary point and area sources have been collected as Volume I. Mobile sources, formerly in Chapter 3.0, are now separated into Volume II. Also, commensurate with the designation of lead as a criteria pollutant, lead emission factors formerly in Appendix E have been incorporated into the appropriate Sections. For persons unfamiliar with the contents of AP-42, an alphabetic cross reference index has been added following the Contents.

Comments and suggestions regarding this document are appreciated and should be sent to the Director, Monitoring And Data Analysis Division, MD-14, U. S. Environmental Protection Agency, Research Triangle Park, NC 27711.

CONTENTS

Page

Page

KEY WORD INDEX

COMPILATION OF AIR POLLUTANT EMISSION FACTORS

VOLUME I:
STATIONARY POINT AND AREA SOURCES

Introduction

What is an emission factor?

An emission factor is an average value which relates the quantity of a pollutant released to the atmosphere with the activity associated with the release of that pollutant. It is usually expressed as the weight of pollutant divided by a unit weight, volume, distance or duration of the activity that emits the pollutant (e. g., kilograms of particulate emitted per megagrams of coal combusted). Using such factors permits the estimation of emissions from various sources of air pollution. In most cases, these factors are simply averages of all available data of acceptable quality, generally without consideration for the influence of various process parameters such as temperature, reactant concentrations, etc. For a few cases, however, such as in the estimation of volatile organic emissions from petroleum storage tanks, this document contains empirical formulae which can relate emissions to such variables as tank diameter, liquid temperature and wind velocity. Emission factors correlated with such variables tend to yield more precise estimates than would factors derived from broader statistical averages.

Recommended uses of emission factors

Emission factors are very useful tools for estimating air pollutants from sources. However, because such factors are averages obtained from data of wide range and varying degrees of accuracy, emissions calculated this way for a given facility are likely to be different from that facility's actual emissions. Because they are averages, the emission factor will be higher than actual emissions for some sources and lower than for others. Only an onsite source test can determine the actual pollutant contribution from a source, under the conditions existing at the time of the test. For the most accurate emissions estimation, it is recommended that source specific data be obtained whenever possible. Factors are more appropriately used to estimate the collective emissions of a number of sources, such as is done in emissions inventory efforts.

If factors are used to predict emissions from new or proposed sources, the user should review the latest literature and technology to determine if such sources are likely to exhibit emission characteristics different from those of typical existing sources.

In a few AP-42 Sections, emission factors are presented for facilities having air pollution control equipment in place. These factors generally are not intended to represent best available or state of the art control technology, rather they relate to the level of control commonly found on existing facilities. The usefulness of this information should be considered carefully, in light of changes in air pollution control technology. The user should consider the age, level of maintenance and other aspects which may influence equipment efficacy.

Examples of various factor applications

Calculating carbon monoxide (CO) emissions from distillate oil combustion serves as an example of the simplest use of emission factors. Consider an industrial boiler which burns 90,000 liters of distillate oil per day. In Section 1.3 of AP-42, the CO emission factor for industrial boilers burning distillate oil is 0.6 kg CO per 10^3 liters of oil burned.

Then CO emissions

= CO emission factor x distillate oil burned/day

= 0.6 x 90

= 54 kg/day

In a somewhat more complex case, suppose a sulfuric acid (H_2SO_4) plant produces 200 Mg of 100% H_2SO_4 per day by converting sulfur dioxide (SO_2) into sulfur trioxide (SO_3) at 97.5% efficiency. In Section 5.17, the SO_2 emission factors are listed according to SO_2 to SO_3 conversion efficiencies, in whole numbers. The reader is directed to Footnote b, an interpolation formula which may be used to obtain the emission factor for 97.5% SO_2 to SO_3 conversion.

Emission factor for kg SO_2/Mg 100% H_2SO_4

= 682 - [(6.82)(% SO_2 to SO_3 conversion)]

= 682 - [(6.82)(97.5)]

= 682 - 665

= 17

For production of 200 Mg of 100% H_2SO_4 per day, SO_2 emissions are calculated as

SO_2 emissions

= 17 kg SO_2 emissions/Mg 100% H_2SO_4 x 200 Mg 100% H_2SO_4/day

= 3400 kg/day

Emission Factor Ratings

To help users understand the reliability and accuracy of AP-42 emission factors, each Table (and sometimes individual factors within a Table) is given a rating (A through E, with A being the best) which reflects the quality and the amount of data on which the factors are based. In general, factors based on many observations or on more widely accepted test procedures are assigned higher rankings. For instance, an emission factor based on ten or more source tests on different plants would likely get an A rating, if all tests were conducted using a single valid reference measurement method or equivalent techniques. Conversely, a factor based on a single observation of questionable quality, or one extrapolated from another factor for a similar process, would probably be labeled D or E. Several subjective schemes have been used in the past to assign these ratings, depending upon data availability, source characteristics, etc. Because these ratings are subjective and take no account of the inherent scatter among the data used to calculate factors, they should be used only as approximations, to infer error bounds or confidence intervals about each emission factor. At most, a rating should be considered an indicator of the accuracy and precision of a given factor used to estimate emissions from a large number of sources. This indicator will largely reflect the professional judgement of the authors and reviewers of AP-42 Sections concerning the reliability of any estimates derived with these factors.

1. EXTERNAL COMBUSTION SOURCES

External combustion sources include steam/electric generating plants, industrial boilers, and commercial and domestic combustion units. Coal, fuel oil and natural gas are the major fossil fuels used by these sources. Other fuels, used in relatively small quantities, are liquefied petroleum gas, wood, coke, refinery gas, blast furnace gas and other waste or byproduct fuels. Coal, oil and natural gas currently supply about 95 percent of the total thermal energy consumed in the United States. 1980 saw nationwide consumption[1] of over 530 x 10^6 megagrams (585 million tons) of bituminous coal, nearly 3.6 x 10^6 megagrams (4 million tons) of anthracite coal, 91 x 10^9 liters (24 billion gallons) of distillate oil, 114 x 10^9 liters (37 billion gallons) of residual oil, and 57 x 10^{12} cubic meters (20 trillion cubic feet) of natural gas.

Power generation, process heating and space heating are some of the largest fuel combustion sources of sulfur oxides, nitrogen oxides and particulate emissions. The following Sections present emission factor data on the major fossil fuels - coal, fuel oil and natural gas - and for other fuels as well.

[1] 1980 National Emissions Data System (NEDS) Fuel Use Report, EPA-450/4-82-011, U. S. Environmental Protection Agency, Research Triangle Park, NC, August 1982.

1.1. BITUMINOUS AND SUBBITUMINOUS COAL COMBUSTION

1.1.1 General[1]

Coal is a complex combination of organic matter and inorganic ash formed over eons from successive layers of fallen vegetation. Coal types are broadly classified as anthracite, bituminous, subbituminous or lignite, and classification is made by heating values and amounts of fixed carbon, volatile matter, ash, sulfur and moisture. Formulas for differentiating coals based on these properties are given in Reference 1. See Sections 1.2 and 1.7 for discussions of anthracite and lignite, respectively.

There are two major coal combustion techniques, suspension firing and grate firing. Suspension firing is the primary combustion mechanism in pulverized coal and cyclone systems. Grate firing is the primary mechanism in underfeed and overfeed stokers. Both mechanisms are employed in spreader stokers.

Pulverized coal furnaces are used primarily in utility and large industrial boilers. In these systems, the coal is pulverized in a mill to the consistency of talcum powder (i.e., at least 70 percent of the particles will pass through a 200 mesh sieve). The pulverized coal is generally entrained in primary air before being fed through the burners to the combustion chamber, where it is fired in suspension. Pulverized coal furnaces are classified as either dry or wet bottom, depending on the ash removal technique. Dry bottom furnaces fire coals with high ash fusion temperatures, and dry ash removal techniques are used. In wet bottom (slag tap) furnaces, coals with low ash fusion temperatures are used, and molten ash is drained from the bottom of the furnace. Pulverized coal furnaces are further classified by the firing position of the burners, i.e., single (front or rear) wall, horizontally opposed, vertical, tangential (corner fired), turbo or arch fired.

Cyclone furnaces burn low ash fusion temperature coal crushed to a 4 mesh size. The coal is fed tangentially, with primary air, to a horizontal cylindrical combustion chamber. In this chamber, small coal particles are burned in suspension, while the larger particles are forced against the outer wall. Because of the high temperatures developed in the relatively small furnace volume, and because of the low fusion temperature of the coal ash, much of the ash forms a liquid slag which is drained from the bottom of the furnace through a slag tap opening. Cyclone furnaces are used mostly in utility and large industrial applications.

In spreader stokers, a flipping mechanism throws the coal into the furnace and onto a moving fuel bed. Combustion occurs partly in suspension and partly on the grate. Because of significant carbon in the particulate,

flyash reinjection from mechanical collectors is commonly employed to improve boiler efficiency. Ash residue in the fuel bed is deposited in a receiving pit at the end of the grate.

In overfeed stokers, coal is fed onto a traveling or vibrating grate, and it burns on the fuel bed as it progresses through the furnace. Ash particles fall into an ash pit at the rear of the stoker. The term "overfeed" applies because the coal is fed onto the moving grate under an adjustable gate. Conversely, in "underfeed" stokers, coal is fed into the firing zone from underneath by mechanical rams or screw conveyers. The coal moves in a channel, known as a retort, from which it is forced upward, spilling over the top of each side to form and to feed the fuel bed. Combustion is completed by the time the bed reaches the side dump grates from which the ash is discharged to shallow pits. Underfeed stokers include single retort units and multiple retort units, the latter having several retorts side by side.

1.1.2 Emissions and Controls

The major pollutants of concern from external coal combustion are particulate, sulfur oxides and nitrogen oxides. Some unburnt combustibles, including numerous organic compounds and carbon monoxide, are generally emitted even under proper boiler operating conditions.

Particulate[2-4] - Particulate composition and emission levels are a complex function of firing configuration, boiler operation and coal properties. In pulverized coal systems, combustion is almost complete, and thus particulate is largely comprised of inorganic ash residue. In wet bottom pulverized coal units and cyclones, the quantity of ash leaving the boiler is less than in dry bottom units, since some of the ash liquifies, collects on the furnace walls, and drains from the furnace bottom as molten slag. In an effort to increase the fraction of ash drawn off as wet slag and thus to reduce the flyash disposal problem, flyash is sometimes reinjected from collection equipment into slag tap systems. Ash from dry bottom units may also be reinjected into wet bottom boilers for this same purpose.

Because a mixture of fine and coarse coal particles is fired in spreader stokers, significant unburnt carbon can be present in the particulate. To improve boiler efficiency, flyash from collection devices (typically multiple cyclones) is sometimes reinjected into spreader stoker furnaces. This practice can dramatically increase the particulate loading at the boiler outlet and, to a lesser extent, at the mechanical collector outlet. Flyash can also be reinjected from the boiler, air heater and economizer dust hoppers. Flyash reinjection from these hoppers does not increase particulate loadings nearly so much as from multiple cyclones.[5]

Particulate emissions from uncontrolled overfeed and underfeed stokers are considerably lower than from pulverized coal units and spreader stokers, since combustion takes place in a relatively quiescent fuel bed. Flyash reinjection is not practiced in these kinds of stokers.

Other variables than firing configuration and flyash reinjection can affect emissions from stokers. Particulate loadings will often increase as

load increases (especially as full load is approached) and with sudden load changes. Similarly, particulate can increase as the ash and fines contents increase. ("Fines" are defined in this context as coal particles smaller than one sixteenth inch, or about 1.6 millimeters, in diameter.) Conversely, particulate can be reduced significantly when overfire air pressures are increased.[5]

The primary kinds of particulate control devices used for coal combustion include multiple cyclones, electrostatic precipitators, fabric filters (baghouses) and scrubbers. Some measure of control will even result due to ash settling in boiler/air heater/economizer dust hoppers, large breeches and chimney bases. To the extent possible from the existing data base, the effects of such settling are reflected in the emission factors in Table 1.1-1.

Electrostatic precipitators (ESP) are the most common high efficiency control device used on pulverized coal and cyclone units, and they are being used increasingly on stokers. Generally, ESP collection efficiencies are a function of collection plate area per volumetric flow rate of flue gas through the device. Particulate control efficiencies of 99.9 weight percent are obtainable with ESPs. Fabric filters have recently seen increased use in both utility and industrial applications, generally effecting about 99.8 percent efficiency. An advantage of fabric filters is that they are unaffected by high flyash resistivities associated with low sulfur coals. ESPs located after air preheaters (i.e., cold side precipitators) may operate at significantly reduced efficiencies when low sulfur coal is fired. Scrubbers are also used to control particulate, although their primary use is to control sulfur oxides. One drawback of scrubbers is the high energy requirement to achieve control efficiencies comparable to those of ESPs and baghouses.[2]

Mechanical collectors, generally multiple cyclones, are the primary means of control on many stokers and are sometimes installed upstream of high efficiency control devices in order to reduce the ash collection burden. Depending on application and design, multiple cyclone efficiencies can vary tremendously. Where cyclone design flow rates are not attained (which is common with underfeed and overfeed stokers), these devices may be only marginally effective and may prove little better in reducing particulate than large breeching. Conversely, well designed multiple cyclones, operating at the required flow rates, can achieve collection efficiencies on spreader stokers and overfeed stokers of 90 to 95 percent. Even higher collection efficiencies are obtainable on spreader stokers with reinjected flyash because of the larger particle sizes and increased particulate loadings reaching the controls.[5-6]

Sulfur Oxides[7-9] - Gaseous sulfur oxides from external coal combustion are largely sulfur dioxide (SO_2) and much lesser quantities of sulfur trioxide (SO_3) and gaseous sulfates. These compounds form as the organic and pyritic sulfur in the coal is oxidized during the combustion process. On average, 98 percent of the sulfur present in bituminous coal will be emitted as gaseous sulfur oxides, whereas somewhat less will be emitted when subbituminous coal is fired. The more alkaline nature of the ash in some subbituminous coals causes some of the sulfur to react to form various sulfate

TABLE 1.1-1. EMISSION FACTORS FOR EXTERNAL BITUMINOUS AND SUBBITUMINOUS COAL COMBUSTION[a]

Firing Configuration	Particulate[b]		Sulfur Oxides[c]		Nitrogen Oxides[d]		Carbon Monoxide[e]		Nonmethane VOC[e,f]		Methane[e]	
	kg/Mg	lb/ton	kg/Mg	lb/ton	kg/Mg	lb/ton	kg/Mg	lb/ton	kg/Mg	lb/ton	kg/Mg	lb/ton
Pulverized coal fired												
Dry bottom	5A	10A	19.5S(17.5S)	39S(35S)	10.5(7.5)[g]	21(15)[g]	0.3	0.6	0.04	0.07	0.015	0.03
Wet bottom	3.5A[h]	7A[h]	19.5S(17.5S)	39S(35S)	17	34	0.3	0.6	0.04	0.07	0.015	0.03
Cyclone furnace	1A[h]	2A[h]	19.5S(17.5S)	39S(35S)	18.5	37	0.3	0.6	0.04	0.07	0.015	0.03
Spreader stoker												
Uncontrolled	30[j]	60[j]	19.5S(17.5S)	39S(35S)	7	14	2.5	5	0.04	0.07	0.015	0.03
After multiple cyclone												
With fly ash reinjection from multiple cyclone	8.5	17	19.5S(17.5S)	39S(35S)	7	14	2.5	5	0.04	0.07	0.015	0.03
No fly ash reinjection from multiple cyclone	6	12	19.5S(17.5S)	39S(35S)	7	14	2.5	5	0.04	0.07	0.015	0.03
Overfeed stoker[k]												
Uncontrolled	8[m]	16[m]	19.5S(17.5S)	39S(35S)	3.25	7.5	3	6	0.04	0.07	0.015	0.03
After multiple cyclone	4.5[n]	9[n]	19.5S(17.5S)	39S(35S)	3.25	7.5	3	6	0.04	0.07	0.015	0.03
Underfeed stoker												
Uncontrolled	7.5[p]	15[p]	15.5S	31S	4.75	9.5	5.5	11	0.65	1.3	0.4	0.8
After multiple cyclone	5.5[n]	11[n]	15.5S	31S	4.75	9.5	5.5	11	0.65	1.3	0.4	0.8
Handfired units	7.5	15	15.5S	31S	1.5	3	45	90	5	10	4	8

[a]Factors represent uncontrolled emissions unless otherwise specified and should be applied to coal consumption as fired.
[b]Based on EPA Method 5 (front half catch) as described in Reference 12. Where particulate is expressed in terms of coal ash content, A, factor is determined by multiplying weight % ash content of coal (as fired) by the numerical value preceding the "A". For example, if coal having 8% ash is fired in a dry bottom unit, the particulate emission factor would be 5 x 8, or 40 kg/Mg (80 lb/ton). The "condensible" matter collected in back half catch of EPA Method 5 averages <5% of front half, or "filterable", catch for pulverized coal and cyclone furnaces; 10% for spreader stokers; 15% for other stokers; and 50% for handfired units (References 6, 19, 49).
[c]Expressed as SO_2, including SO_2, SO_3 and gaseous sulfates. Factors in parentheses should be used to estimate gaseous SO_x emissions for subbituminous coal. In all cases, "S" is weight % sulfur content of coal as fired. See Footnote b for example calculation. On average for bituminous coal, 97% of fuel sulfur is emitted as SO_2, and only about 0.7% of fuel sulfur is emitted as SO_3 and gaseous sulfate. An equally small percent of fuel sulfur is emitted as particulate sulfate (References 9, 13). Small quantities of sulfur are also retained in bottom ash. With subbituminous coal generally about 10% more fuel sulfur is retained in the bottom ash and particulate because of the more alkaline nature of the coal ash. Conversion to gaseous sulfate appears about the same as for bituminous coal.
[d]Expressed as NO_2. Generally, 95 - 99 volume % of nitrogen oxides present in combustion exhaust will be in the form of NO, the rest NO_2 (Reference 11). To express factors as NO, multiply by factor of 0.66. All factors represent emission at baseline operation (i.e., 60 - 110% load and no NO_x control measures, as discussed in text).
[e]Nominal values achieveable under normal operating conditions. Values one or two orders of magnitude higher can occur when combustion is not complete.
[f]Nonmethane volatile organic compounds (VOC), expressed as C_2 to C_{16} n-alkane equivalents (Reference 58). Because of limited data on NMVOC available to distinguish the effects of firing configuration, all data were averaged collectively to develop a single average for pulverized coal units, cyclones, spreaders and overfeed stokers.
[g]Parenthetic value is for tangentially fired boilers.
[h]Uncontrolled particulate emissions, when no fly ash reinjection is employed. When control device is installed, and collected fly ash is reinjected to boiler, particulate from boiler reaching control equipment can increase by up to a factor of two.
[j]Accounts for fly ash settling in an economizer, air heater or breeching upstream of control device or stack. (Particulate directly at boiler outlet typically will be twice this level.) Factor should be applied even when fly ash is reinjected to boiler from boiler, air heater or economizer dust hoppers.
[k]Includes traveling grate, vibrating grate and chain grate stokers.
[m]Accounts for fly ash settling in breeching or stack base. Particulate loadings directly at boiler outlet typically can be 50% higher.
[n]See text for discussion of apparently low multiple cyclone control efficiencies, regarding uncontrolled emissions.
[p]Accounts for fly ash settling in breeching downstream of boiler outlet.

TABLE 1.1-2. EMISSION FACTOR RATINGS* AND REFERENCES FOR BITUMINOUS AND SUBBITUMINOUS COAL COMBUSTION

Firing Configuration	Particulate		Sulfur Oxides		Nitrogen Oxides		Carbon Monoxide		Nonmethane VOC		Methane	
	Rating	Ref.	Rating	Ref.	Rating	Ref.	Rating	Ref.	Rating	Ref.	Rating	Ref.
Pulverized coal fired												
Dry bottom	A	14-25	A	9,16-19,21, 31-37,39, 41-46,51-55	A	11,14,16-17, 21,46,56	A	16,18-19,21 47,57	A	55,58	A	58
Wet bottom	D	14,16,26	A	"	C	14,16	A	"	A	58	A	"
Cyclone furnace	D	14,19,22, 27-29	A	"	B	11	A	"	A	"	A	"
Spreader stoker												
Uncontrolled	B	17,30-35	A	"	A	11,17,31-37 39-40,46	A	17,19,31-34, 36,47,51	A	"	A	"
After multiple cyclone												
With flyash reinjection from cyclone	B	14,32,36-38	A	"	A	"	A	"	A	"	A	"
No flyash reinjection from cyclone	A	17,31-35, 39,40,59	A	"	A	"	A	"	A	"	A	"
Overfeed stoker												
Uncontrolled	B	6,17,41-43, 45-47	A	"	A	11,17,19, 41-45	B	17,41-42,45, 47,51	A	"	A	"
After multiple cyclone	B	6,41,44-45	A	"	A	"	B	"	A	"	A	"
Underfeed stoker												
Uncontrolled	B	6,19,47-48	B	19,48	B	19,47-48	B	19,47-48	A	47,58	A	47,58
After multiple cyclone	C	6	B	"	B	"	B	"	A	"	A	"
Handfired units	D	49-50	D	"	D	50	D	50	D	50,58	D	50,58

*These ratings, in the context of this Section, refer to the number of test data on which each emission factor is based. An "A" rating means the factor is based on tests at ten or more boilers, a "B" rating on six to nine test data, and a "C" rating on test data for two to five boilers. A "D" rating indicates the factor is based on only a single datum or extrapolated from a secondary reference. These ratings are not a measure of the scatter in the underlying test data. However, a higher rating will generally increase confidence that a given factor will better approximate the average emissions for a particular boiler category.

salts that are retained in the boiler or in the flyash. Generally, boiler size, firing configuration and boiler operation have little impact on the percent conversion of fuel sulfur to sulfur oxides.

Several techniques are used to reduce sulfur oxides from coal combustion. One way is to switch to lower sulfur coals, since sulfur oxide emissions are proportional to the sulfur content of the coal. This alternative may not be possible where lower sulfur coal is not readily available or where a different grade of coal cannot be satisfactorily fired. In some cases, various cleaning processes may be employed to reduce the fuel sulfur content. Physical coal cleaning removes mineral sulfur such as pyrite but is not effective in removing organic sulfur. Chemical cleaning and solvent refining processes are being developed to remove organic sulfur.

Many flue gas desulfurization techniques can remove sulfur oxides formed during combustion. Flue gases can be treated through wet, semidry or dry desulfurization processes of either the throwaway type, in which all waste streams are discarded, or the recovery (regenerable) type, in which the SO_x absorbent is regenerated and reused. To date, wet systems are the most commonly applied. Wet systems generally use alkali slurries as the SO_x absorbent medium and can be designed to remove well in excess of 90 percent of the incoming SO_x.[7] Particulate reduction of up to 99 percent is also possible with wet scrubbers, but flyash is often collected by upstream ESPs or baghouses to avoid erosion of the desulfurization equipment and possible interference with the process reactions.[7] Also, the volume of scrubber sludge is reduced with separate flyash removal, and contamination of the reagents and byproducts is prevented. References 7 and 8 give more details on scrubbing and other SO_x removal techniques.

Nitrogen Oxides [10-11] - Nitrogen oxides (NO_x) emissions from coal combustion are primarily nitrogen oxide (NO). Only a few volume percent are comprised of nitrogen dioxide (NO_2). NO results from thermal fixation of atmospheric nitrogen in the combustion flame and from oxidation of the nitrogen bound in the coal. Typically, only 20 to 60 percent of the fuel nitrogen is converted to nitrogen oxides. Bituminous and subbituminous coals usually contain from 0.5 to 2 weight percent nitrogen, present mainly in aromatic ring structures. Fuel nitrogen can account for up to 80 percent of total NO_x from coal combustion.

A number of combustion modifications can be made to reduce NO_x emissions from boilers. Low excess air (LEA) firing is the most widespread control modification, because it can be practiced in both old and new units and in all sizes of boilers. LEA firing is easy to implement and has the added advantage of increasing fuel use efficiency. LEA firing is generally only effective above 20 percent excess air for pulverized coal units and above 30 percent excess air for stokers. Below these levels the NO_x reduction due to decreased O_2 availability is offset by increased NO_x due to increased flame temperature. Another NO_x reduction technique is simply to switch to a coal having a lower nitrogen content, although many boilers may not properly fire coals of different properties.

Off-stoichiometric (staged) combustion is also an effective means of controlling NO_x from coal fired equipment. This can be achieved by using

overfire air or low NO_x burners designed to stage combustion in the flame zone. Other NO_x reduction techniques include flue gas recirculation, load reduction, and steam or water injection. However, these techniques are not very effective for use on coal fired equipment because of the fuel nitrogen effect. Ammonia injection is another technique which can be used, but it is costly. The net reduction of NO_x from any of these techniques or combinations thereof varies considerably with boiler type, coal properties and existing operating practices. Typical reductions will range from 10 to 60 percent. References 10 and 60 should be consulted for a detailed discussion of each of these NO_x reduction techniques. To date, flue gas treatment is not used to reduce nitrogen oxide emissions due to its higher cost.

Volatile Organic Compounds and Carbon Monoxide - Volatile organic compounds (VOC) and carbon monoxide (CO) are unburnt gaseous combustibles which are generally emitted in quite small amounts. However, during startups, temporary upsets or other conditions preventing complete combustion, unburnt combustible emissions may increase dramatically. VOC and CO emissions per unit of fuel fired are normally lower from pulverized coal or cyclone furnaces than from smaller stokers and handfired units where operating conditions are not as well controlled. Measures used for NO_x control can increase CO emissions, so to minimize the risk of explosion, such measures are applied only to the point at which CO in the flue gas reaches a maximum of about 200 parts per million. Control measures, other than maintaining proper combustion conditions, are not applied to control VOC and CO.

Emission Factors and References - Average emission factors for bituminous and subbituminous coal combustion in boilers are presented in Table 1.1-1. The factors for underfeed stokers and handfired units also may be applied to hot air furnaces. In addition to factors for uncontrolled emissions, factors are also presented for emissions after multiple cyclones. Emission factor ratings and references are presented in Table 1.1-2. Further general information on coal, combustion practices, emissions and controls is available in the references cited above.

References for Section 1.1

1. Steam, 38th Edition, Babcock and Wilcox, New York, 1975.

2. Control Techniques for Particulate Emissions from Stationary Sources, Volume I, EPA-450/3-81-005a, U.S. Environmental Protection Agency, Research Triangle Park, NC, April 1981.

3. ibidem, Volume II, EPA-450/3-81-005b.

4. Electric Utility Steam Generating Units: Background Information for Proposed Particulate Matter Emission Standards, EPA-450/2-78-006a, U.S. Environmental Protection Agency, Research Triangle Park, NC, July 1978.

5. William Axtman and Mark A. Eleniewski, "Field Test Results of Eighteen Industrial Coal Stoker Fired Boilers for Emission Control and Improved Efficiency", Presented at the 74th Annual Meeting of the Air Pollution Control Association, Philadelphia, PA, June 1981.

6. Field Tests of Industrial Stoker Coal Fired Boilers for Emission Control and Efficiency Improvement - Sites L1-L7, EPA-600/7-81-020a, U.S. Environmental Protection Agency, Washington, DC, February 1981.

7. Control Techniques for Sulfur Dioxide Emissions from Stationary Sources, 2nd Edition, EPA-450/3-81-004, U.S. Environmental Protection Agency, Research Triangle Park, NC, April 1981.

8. Electric Utility Steam Generating Units: Background Information for Proposed SO_2 Emission Standards, EPA-450/2-78-007a, U.S. Environmental Protection Agency, Research Triangle Park, NC, July 1978.

9. Carlo Castaldini and Meredith Angwin, Boiler Design and Operating Variables Affecting Uncontrolled Sulfur Emissions from Pulverized Coal Fired Steam Generators, EPA-450/3-77-047, U.S. Environmental Protection Agency, Research Triangle Park, NC, December 1977.

10. Control Techniques for Nitrogen Oxides Emissions from Stationary Sources, 2nd Edition, EPA-450/1-78-001, U.S. Environmental Protection Agency, Research Triangle Park, NC, January 1978.

11. Review of NO_x Emission Factors for Stationary Fossil Fuel Combustion Sources, EPA-450/4-79-021, U.S. Environmental Protection Agency, Research Triangle Park, NC, September 1979.

12. Standards of Performance for New Stationary Sources, 36 FR 24876, December 23, 1971.

13. Lou Scinto, Primary Sulfate Emissions from Coal and Oil Combustion, EPA Contract Number 68-02-3138, TRW Inc., Redondo Beach, CA, February 1980.

14. Stanley T. Cuffe and Richard W. Gerstle, Emissions from Coal Fired Power Plants: A Comprehensive Summary, 999-AP-35, U.S. Department of Health, Education and Welfare, Durham, NC, 1967.

15. Field Testing: Application of Combustion Modifications To Control NO_x Emissions from Utility Boilers, EPA-650/2-74-066, U.S. Environmental Protection Agency, Washington, DC, June 1974.

16. Control of Utility Boiler and Gas Turbine Pollutant Emissions by Combustion Modification - Phase I, EPA-600/7-78-036a, U.S. Environmental Protection Agency, Washington, DC, March 1978.

17. Low-sulfur Western Coal Use in Existing Small and Intermediate Size Boilers, EPA-600/7-78-153a, U.S. Environmental Protection Agency, Washington, DC, July 1978.

18. Hazardous Emission Characterization of Utility Boilers, EPA-650/2-75-066, U.S. Environmental Protection Agency, Washington, DC, July 1975.

19. Application of Combustion Modifications To Control Pollutant Emissions from Industrial Boilers - Phase I, EPA-650/2-74-078a, U.S. Environmental Protection Agency, Washington, DC, October 1974.

20. Field Study To Obtain Trace Element Mass Balances at a Coal Fired Utility Boiler, EPA-600/7-80-171, U.S. Environmental Protection Agency, Washington, DC, October 1980.

21. Environmental Assessment of Coal- and Oil-firing in a Controlled Industrial Boiler, Volume II, EPA-600/7-78-164b, U.S. Environmental Protection Agency, Washington, DC, August 1978.

22. Coal Fired Power Plant Trace Element Study, U.S. Environmental Protection Agency, Denver, CO, September 1975.

23. Source Testing of Duke Power Company, Plezer, SC, EMB-71-CI-01, U.S. Environmental Protection Agency, Research Triangle Park, NC, February, 1971.

24. John W. Kaakinen, et al., "Trace Element Behavior in Coal-fired Power Plants", Environmental Science and Technology, 9(9): 862-869, September 1975.

25. Five Field Performance Tests on Koppers Company Precipitator, Docket Number OAQPS-78-1, Office of Air Quality Planning and Standards, U.S. Environmental Protection Agency, Research Triangle Park, NC, February-March 1974.

26. H. M. Rayner and L. P. Copian, Slag Tap Boiler Performance Associated with Power Plant Flyash Disposal, Western Electric Company, Hawthorne Works, Chicago, IL, undated.

27. A. B. Walker, "Emission Characteristics for Industrial Boilers", Air Engineering, 9(8):17-19, August 1967.

28. Environmental Assessment of Coal-fired Controlled Utility Boiler, EPA-600/7-80-086, U.S. Environmental Protection Agency, Washington, DC, April 1980.

29. Steam, 37th Edition, Babcock and Wilcox, New York, 1963.

30. Industrial Boiler: Emission Test Report, Formica Corporation, Cincinnati, Ohio, EMB-80-IBR-7, U.S. Environmental Protection Agency, Research Triangle Park, NC, October 1980.

31. Field Tests of Industrial Stoker Coal-fired Boilers for Emissions Control and Efficiency Improvement - Site A, EPA-600/7-78-136a, U.S. Environmental Protection Agency, Washington, DC, July 1978.

32. ibidem-Site C, EPA-600/7-79-130a, May 1979.

33. ibidem-Site E, EPA-600/7-80-064a, March 1980.

34. ibidem-Site F, EPA-600/7-80-065a, March 1980.

35. ibidem-Site G, EPA-600/7-80-082a, April 1980.

36. ibidem-Site B, EPA-600/7-79-041a, February 1979.

37. Industrial Boilers: Emission Test Report, General Motors Corporation, Parma, Ohio, Volume I, EMB-80-IBR-4, U.S. Environmental Protection Agency, Research Triangle Park, NC, March 1980.

38. A Field Test Using Coal: dRDF Blends in Spreader Stoker-fired Boilers, EPA-600/2-80-095, U.S. Environmental Protection Agency, Cincinnati, OH, August 1980.

39. Industrial Boilers: Emission Test Report, Rickenbacker Air Force Base, Columbus, Ohio, EMB-80-IBR-6, U.S. Environmental Protection Agency, Research Triangle Park, NC, March 1980.

40. Thirty-day Field Tests of Industrial Boilers: Site 1, EPA-600/7-80-085a, U.S. Environmental Protection Agency, Washington, DC, April 1980.

41. Field Tests of Industrial Stoker Coal-fired Boilers for Emissions Control and Efficiency Improvement - Site D, EPA-600/7-79-237a, U.S. Environmental Protection Agency, Washington, DC, November 1979.

42. ibidem-Site H, EPA-600/7-80-112a, May 1980.

43. ibidem-Site I, EPA-600/7-80-136a, May 1980.

44. ibidem-Site J, EPA-600/7-80-137a, May 1980.

45. ibidem-Site K, EPA-600/7-80-138a, May 1980.

46. Regional Air Pollution Study: Point Source Emission Inventory, EPA-600/4-77-014, U.S. Environmental Protection Agency, Research Triangle Park, NC, March 1977.

47. R. P. Hangebrauck, et al., "Emissions of Polynuclear Hydrocarbons and Other Pollutants from Heat Generation and Incineration Process", Journal of the Air Pollution Control Association, 14(7):267-278, July 1964.

48. Source Assessment: Coal-fired Industrial Combustion Equipment Field Tests, EPA-600/2-78-004o, U.S. Environmental Protection Agency, Washington, DC, June 1978.

49. Source Sampling Residential Fireplaces for Emission Factor Development, EPA-450/3-76-010, U.S. Environmental Protection Agency, Research Triangle Park, NC, November 1975.

50. Atmospheric Emissions from Coal Combustion: An Inventory Guide, 999-AP-24, U.S. Department of Health, Education and Welfare, Cincinnati, OH, April 1966.

51. Application of Combustion Modification To Control Pollutant Emissions from Industrial Boilers - Phase II, EPA-600/2-76-086a, U.S. Environmental Protection Agency, Washington, DC, April 1976.

52. Continuous Emission Monitoring for Industrial Boiler, General Motors Corporation, St. Louis, Missouri, Volume 1, EPA Contract Number 68-02-2687, GCA Corporation, Bedford, MA, June 1980.

53. Survey of Flue Gas Desulfurization Systems: Cholla Station, Arizona Public Service Company, EPA-600/7-78-048a, U.S. Environmental Protection Agency, Washington, DC, March 1978.

54. ibidem: La Cygne Station, Kansas City Power and Light, EPA-600/7-78-048d, March 1978.

55. Source Assessment: Dry Bottom Utility Boilers Firing Pulverized Bituminous Coal, EPA-600/2-79-019, U.S. Environmental Protection Agency, Washington, DC, August 1980.

56. Thirty-day Field Tests of Industrial Boilers: Site 3 - Pulverized-coal-fired Boiler, EPA-600/7-80-085c, U.S. Environmental Protection Agency, Washington, DC, April 1980.

57. Systematic Field Study of Nitrogen Oxide Emission Control Methods for Utility Boilers, APTD-1163, U.S. Environmental Protection Agency, Research Triangle Park, NC, December 1971.

58. Emissions of Reactive Volatile Organic Compounds from Utility Boilers, EPA-600/7-80-111, U.S. Environmental Protection Agency, Washington, DC, May 1980.

59. Industrial Boilers: Emission Test Report, DuPont Corporation, Parkersburg, West Virginia, EMB-80-IBR-12, U.S. Environmental Protection Agency, Research Triangle Park, NC, February 1982.

60. Technology Assessment Report for Industrial Boiler Applications: NO_x Combustion Modification, EPA-600/7-79-178f, U.S. Environmental Protection Agency, Research Triangle Park, NC, December 1979.

1.2 ANTHRACITE COAL COMBUSTION

1.2.1 General[1-2]

Anthracite coal is a high rank coal with a high fixed carbon content and low volatile matter content, relative to bituminous coal and lignite, and it has higher ignition and ash fusion temperatures. Because of its low volatile matter content and slight clinkering, anthracite is most commonly fired in medium sized traveling grate stokers and small hand fired units. Some anthracite (occasionally along with petroleum coke) is used in pulverized coal fired boilers. It is also blended with bituminous coal. None is fired in spreader stokers. Because of its low sulfur content (typically less than 0.8 weight percent) and minimal smoking tendencies, anthracite is considered a desirable fuel where readily available.

In the United States, all anthracite is mined in Northeastern Pennsylvania and is consumed mostly in Pennsylvania and several surrounding states. The largest use of anthracite is for space heating. Lesser amounts are employed for steam/electric production; coke manufacturing, sintering and pelletizing; and other industrial uses. Anthracite combustion currently is only a small fraction of the total quantity of coal combusted in the United States.

1.2.2 Emissions and Controls[2-14]

Particulate emissions from anthracite combustion are a function of furnace firing configuration, firing practices (boiler load, quantity and location of underfire air, sootblowing, flyash reinjection, etc.), and the ash content of the coal. Pulverized coal fired boilers emit the highest quantity of particulate per unit of fuel because they fire the anthracite in suspension, which results in a high percentage of ash carryover into the exhaust gases. Pulverized anthracite fired boilers operate in the dry tap or dry bottom mode because of anthracite's characteristically high ash fusion temperature. Traveling grate stokers and hand fired units produce much less particulate per unit of fuel fired, because combustion takes place in a quiescent fuel bed without significant ash carryover into the exhaust gases. In general, particulate emissions from traveling grate stokers will increase during sootblowing and flyash reinjection and with higher fuel bed underfeed air from forced draft fans. Smoking is rarely a problem because of anthracite's low volatile matter content.

Limited data are available on the emission of gaseous pollutants from anthracite combustion. It is assumed from bituminous coal combustion data that a large fraction of the fuel sulfur is emitted as sulfur oxides. Also, because combustion equipment, excess air rates, combustion temperatures, etc., are similar between anthracite and bituminous coal combustion, nitrogen oxide and carbon monoxide emissions are assumed to be similar, too. Volatile organic compound (VOC) emissions, however, are expected to be considerably lower because the volatile matter content of anthracite is significantly less than that of bituminous coal.

TABLE 1.2-1. UNCONTROLLED EMISSION FACTORS FOR ANTHRACITE COMBUSTION[a]

Boiler Type	Particulates[b]		Sulfur Oxides[c]		Nitrogen Oxides[d]		Carbon Monoxide[e]		VOC	
									Nonmethane	Methane
	kg/Mg	lb/ton	kg/Mg	lb/ton	kg/Mg	lb/ton	kg/Mg	lb/ton		
Pulverized coal fired	f	f	19.5S	39S	9	18	f	f	f	f
Traveling grate stoker	4.6[g]	9.1[g]	19.5S	39S	5	10	0.3	0.6	f	f
Hand fed units	5[h]	10[h]	19.5S	39S	1.5	3	f	f	f	f

[a]Factors are for uncontrolled emissions and should be applied to coal consumption as fired.
[b]Based on EPA Method 5 (front half catch).
[c]Based on the assumption that, as with bituminous coal combustion, most of the fuel sulfur is emitted as sulfur oxides. Limited data in Reference 5 verify this assumption for pulverized anthracite fired boilers. Most of these emissions are SO_2, with 1 - 3% SO_3. S indicates that the weight percent of sulfur in the oil should be multiplied by the value given.
[d]For pulverized anthracite fired boilers and hand fed units, assumed to be similar to bituminous coal combustion. For traveling grate stokers, see References 8 and 11.
[e]May increase by several orders of magnitude if a boiler is not properly operated or maintained. Factors for traveling grate stokers are based on limited information in Reference 8. Factors for pulverized coal fired boilers substantiated by additional data in Reference 14.
[f]Emission factor reported in Table 1.1-1 may be used, based on the similarity of anthracite and bituminous coal.
[g]References 12-13, 15-18. Accounts for limited fallout that may occur in fallout chambers and stack breeching. Emission factors for individual boilers may range from 2.5 - 25 kg/Mg (5 - 50 lb/ton) and as high as 25 kg/Mg (50 lb/ton) during sootblowing.
[h]Reference 2.

Control of emissions from anthracite combustion has mainly been limited to particulate matter. The most efficient particulate controls - fabric filters, scrubbers and electrostatic precipitators - have been installed on large pulverized anthracite fired boilers. Fabric filters and venturi scrubbers can effect collection efficiencies exceeding 99 percent. Electrostatic precipitators, on the other hand, are typically only 90 to 97 percent efficient, because of the characteristic high resistivity of low sulfur anthracite flyash. It is reported that higher efficiencies can be achieved using larger precipitators and flue gas conditioning. Mechanical collectors are frequently employed upstream from these devices for large particle removal.

Traveling grate stokers are often uncontrolled. Indeed, particulate control has often been considered unnecessary because of anthracite's low smoking tendencies and of the fact that a significant fraction of large size flyash from stokers is readily collected in flyash hoppers as well as in the breeching and base of the stack. Cyclone collectors have been employed on traveling grate stokers, and limited information suggests these devices may be up to 75 percent efficient on particulate. Flyash reinjection, frequently used in traveling grate stokers to enhance fuel use efficiency, tends to increase particulate emissions per unit of fuel combusted.

Emission factors for anthracite combustion are presented in Table 1.2.1, and emission factor ratings in Table 1.2-2.

TABLE 1.2-2. ANTHRACITE COAL EMISSION FACTOR RATING[a]

Furnace Type	Particulates	Sulfur Oxides	Nitrogen Oxides	Carbon Monoxide	VOC Nonmethane	VOC Methane
Pulverized coal	B	B	B	B	C	C
Traveling grate	B	B	B	B	C	C
Hand fed units	B	B	B	B	D	D

[a]The emission factor rating is explained in the Introduction to this volume.

References for Section 1.2

1. Minerals Yearbook, 1978-79, Bureau of Mines, U. S. Department of the Interior, Washington, DC, 1981.

2. Air Pollutant Emission Factors, HEW Contract No. CPA-22-69-119, TRW Inc., Reston, VA, April 1970.

3. Steam, 38th Edition, Babcock and Wilcox, New York, NY, 1975.

4. Fossil Fuel Fired Industrial Boilers - Background Information for Proposed Standards, Draft, Office of Air Quality Planning and Standards, U. S. Environmental Protection Agency, Research Triangle Park, NC, June 1980.

5. R. W. Cass and R. M. Bradway, Fractional Efficiency of a Utility Boiler Baghouse: Sunbury Steam Electric Station, EPA-600/2-76-077a, U. S. Environmental Protection Agency, Research Triangle Park, NC, March 1976.

6. R. P. Janaso, "Baghouse Dust Collectors on a Low Sulfur Coal Fired Utility Boiler", Presented at the 67th Annual Meeting of the Air Pollution Control Association, Denver, CO, June 1974.

7. J. H. Phelan, et al., Design and Operation Experience with Baghouse Dust Collectors for Pulverized Coal Fired Utility Boilers - Sunbury Station, Holtwood Station, Proceedings of the American Power Conference, Denver, CO, 1976.

8. Source Test Data on Anthracite Fired Traveling Grate Stokers, Office of Air Quality Planning and Standards, U. S. Environmental Protection Agency, Research Triangle Park, NC, 1975.

9. Source and Emissions Information on Anthracite Fired Boilers, Pennsylvania Department of Environmental Resources, Harrisburg, PA, September 27, 1974.

10. R. J. Milligan, et al., Review of NO_x Emission Factors for Stationary Fossil Fuel Combustion Sources, EPA-450/4-79-021, U. S. Environmental Protection Agency, Research Triangle Park, NC, September 1979.

11. N. F. Suprenant, et al., Emissions Assessment of Conventional Stationary Combustion Systems, Volume IV: Commercial/ Institutional Combustion Sources, EPA Contract No. 68-02-2197, GCA Corporation, Bedford, MA, October 1980.

12. Source Sampling of Anthracite Coal Fired Boilers, RCA-Electronic Components, Lancaster, Pennsylvania, Final Report, Scott Environmental Technology, Inc., Plumsteadville, PA, April 1975.

13. Source Sampling of Anthracite Coal Fired Boilers, Shippensburg State College, Shippensburg, Pennsylvania, Final Report, Scott Environmental Technology, Inc., Plumsteadville, PA, May 1975.

14. W. Bartok, et al., Systematic Field Study of NO_x Emission Control Methods for Utility Boilers, APTD-1163, U. S. Environmental Protection Agency, Research Triangle Park, NC, December 1971.

15. Source Sampling of Anthracite Coal Fired Boilers, Ashland State General Hospital, Ashland, Pennsylvania, Final Report, Pennsylvania Department of Environmental Resources, Harrisburg, PA, March 16, 1977.

16. Source Sampling of Anthracite Coal Fired Boilers, Norristown State Hospital, Norristown, Pennsylvania, Final Report, Pennsylvania Department of Environmental Resources, Harrisburg, PA, January 29, 1980.

17. Source Sampling of Anthracite Coal Fired Boilers, Pennhurst Center, Spring City, Pennsylvania, Final Report, TRC Environmental Consultants, Inc., Wethersfield, CT, January 23, 1980.

18. Source Sampling of Anthracite Coal Fired Boilers, West Chester State, West Chester, Pennsylvania, Final Report, Roy Weston, Inc., West Chester, PA, April 4, 1977.

1.3 FUEL OIL COMBUSTION

1.3.1 General[1,2,22]

Fuel oils are broadly classified into two major types, distillate and residual. Distillate oils (fuel oil grade Nos. 1 and 2) are used mainly in domestic and small commercial applications in which easy fuel burning is required. Distillates are more volatile and less viscous than residual oils, having negligible ash and nitrogen contents and usually containing less than 0.3 weight percent sulfur. Residual oils (grade Nos. 4, 5 and 6), on the other hand, are used mainly in utility, industrial and large commercial applications with sophisticated combustion equipment. No. 4 oil is sometimes classified as a distillate, and No. 6 is sometimes referred to as Bunker C. Being more viscous and less volatile than distillate oils, the heavier residual oils (Nos. 5 and 6) must be heated to facilitate handling and proper atomization. Because residual oils are produced from the residue left after lighter fractions (gasoline, kerosene and distillate oils) have been removed from the crude oil, they contain significant quantities of ash, nitrogen and sulfur. Properties of typical fuel oils are given in Appendix A.

1.3.2 Emissions

Emissions from fuel oil combustion are dependent on the grade and composition of the fuel, the type and size of the boiler, the firing and loading practices used, and the level of equipment maintenance. Table 1.3-1 presents emission factors for fuel oil combustion in units without control equipment. The emission factors for industrial and commercial boilers are divided into distillate and residual oil categories because the combustion of each produces significantly different emissions of particulates, SO and NO . The reader is urged to consult the references for a detailed discussion of the parameters that affect emissions from oil combustion.

Particulate Matter[3-7,12-13,24,26-27] - Particulate emissions are most dependent on the grade of fuel fired. The lighter distillate oils result in significantly lower particulate formation than do the heavier residual oils. Among residual oils, Nos. 4 and 5 usually result in less particulate than does the heavier No. 6.

In boilers firing No. 6, particulate emissions can be described, on the average, as a function of the sulfur content of the oil. As shown in Table 1.3-1 (Footnote g), particulate emissions can be reduced considerably when low-sulfur grade 6 oil is fired. This is because low sulfur No. 6, whether refined from naturally occurring low sulfur crude oil or desulfurized by one of several current processes, exhibits substantially lower viscosity and reduced asphaltene, ash and sulfur - all of which results in better atomization and cleaner combustion.

TABLE 1.3-1. UNCONTROLLED EMISSION FACTORS FOR FUEL OIL COMBUSTION

EMISSION FACTOR RATING: A

Boiler Type[a]	Particulate Matter[b]		Sulfur Dioxide[c]		Sulfur Trioxide		Carbon Monoxide[d]		Nitrogen Oxide[e]		Volatile Organics[f] Nonmethane		Volatile Organics[f] Methane	
	$kg/10^3 l$	$lb/10^3 gal$	$kg/10^3 l$	$lb/10^3 gal$	$kg/10^3 l$	$lb/10^3 gal$	$kg/10^3 l$	$lb/10^3 gal$	$kg/10^3 l$	$lb/10^3 gal$	$kg/10^3 l$	$lb/10^3 gal$	$kg/10^3 l$	$lb/10^3 gal$
Utility Boilers														
Residual Oil	g	g	19S	157S	0.34S[h]	2.9S[h]	0.6	5	8.0 (12.6)(5)[i]	67 (105)(42)[i]	0.09	0.76	0.03	0.28
Industrial Boilers														
Residual Oil	g	g	19S	157S	0.24S	2S	0.6	5	6.6[j]	55[j]	0.034	0.28	0.12	1.0
Distillate Oil	0.24	2	17S	142S	0.24S	2S	0.6	5	2.4	20	0.024	0.2	0.006	0.052
Commercial Boilers														
Residual Oil	g	g	19S	157S	0.24S	2S	0.6	5	6.6	55	0.14	1.13	0.057	0.475
Distillate Oil	0.24	2	17S	142S	0.24S	2S	0.6	5	2.4	20	0.04	0.34	0.026	0.216
Residential Furnaces														
Distillate Oil	0.3	2.5	17S	142S	0.24S	2S	0.6	5	2.2	18	0.085	0.713	0.214	1.78

[a]Boilers can be approximately classified according to their gross (higher) heat rate as shown below:
Utility (power plant) boilers: $>106 \times 10^9$ J/hr ($>100 \times 10^6$ Btu/hr)
Industrial boilers: 10.6×10^9 to 106×10^9 J/hr (10×10^6 to 100×10^6 Btu/hr)
Commercial boilers: 0.5×10^9 to 10.6×10^9 J/hr (0.5×10^6 to 10×10^6 Btu/hr)
Residential furnaces: $<0.5 \times 10^9$ J/hr ($<0.5 \times 10^6$ Btu/hr)

[b]References 3-7 and 24-25. Particulate matter is defined in this section as that material collected by EPA Method 5 (front half catch).

[c]References 1-5. S indicates that the weight % of sulfur in the oil should be multiplied by the value given.

[d]References 3-5 and 8-10. Carbon monoxide emissions may increase by factors of 10 to 100 if the unit is improperly operated or not well maintained.

[e]Expressed as NO_2. References 1-5, 8-11, 17 and 26. Test results indicate that at least 95% by weight of NO_x is NO for all boiler types except residential furnaces, where about 75% is NO.

[f]References 18-21. Volatile organic compound emissions are generally negligible unless boiler is improperly operated or not well maintained, in which case emissions may increase by several orders of magnitude.

[g]Particulate emission factors for residual oil combustion are, on average, a function of fuel oil grade and sulfur content:
Grade 6 oil: $1.25(S) + 0.38$ $kg/10^3$ liter [$10(S) + 3$ $lb/10^3$ gal] where S is the weight % of sulfur in the oil. This relationship is based on 81 individual tests and has a correlation coefficient of 0.65.
Grade 5 oil: 1.25 $kg/10^3$ liter (10 $lb/10^3$ gal)
Grade 4 oil: 0.88 $kg/10^3$ liter (7 $lb/10^3$ gal)

[h]Reference 25.

[i]Use 5 $kg/10^3$ liters (42 $lb/10^3$ gal) for tangentially fired boilers, 12.6 $kg/10^3$ liters (105 $lb/10^3$gal) for vertical fired boilers, and 8.0 $kg/10^3$ liters (67 $lb/10^3$ gal) for all others, at full load and normal (>15%) excess air. Several combustion modifications can be employed for NO_x reduction: (1) limited excess air can reduce NO_x emissions 5-20%, (2) staged combustion 20-40%, (3) using low NO_x burners 20-50%, and (4) ammonia injection can reduce NO_x emissions 40-70% but may increase emissions of ammonia. Combinations of these modifications have been employed for further reductions in certain boilers. See Reference 23 for a discussion of these and other NO_x reducing techniques and their operational and environmental impacts.

[j]Nitrogen oxides emissions from residual oil combustion in industrial and commercial boilers are strongly related to fuel nitrogen content, estimated more accurately by the empirical relationship:
kg $NO_2/10^3$ liters $= 2.75 + 50(N)^2$ [lb $NO_2/10^3$gal $= 22 + 400(N)^2$] where N is the weight % of nitrogen in the oil. For residual oils having high (>0.5 weight %) nitrogen content, use 15 kg $NO_2/10^3$ liter (120 lb $NO_2/10^3$gal) as an emission factor.

Boiler load can also affect particulate emissions in units firing No. 6 oil. At low load conditions, particulate emissions may be lowered by 30 to 40 percent from utility boilers and by as much as 60 percent from small industrial and commercial units. No significant particulate reductions have been noted at low loads from boilers firing any of the lighter grades, however. At too low a load condition, proper combustion conditions cannot be maintained, and particulate emissions may increase drastically. It should be noted, in this regard, that any condition that prevents proper boiler operation can result in excessive particulate formation.

Sulfur Oxides (SO_x)[1-5,25,27] - Total sulfur oxide emissions are almost entirely dependent on the sulfur content of the fuel and are not affected by boiler size burner design, or grade of fuel being fired. On the average, more than 95 percent of the fuel sulfur is emitted as SO_2, about 1 to 5 percent as SO_3 and about 1 to 3 percent as particulate sulfates. Sulfur trioxide readily reacts with water vapor (both in air and in flue gases) to form a sulfuric acid mist.

Nitrogen Oxides (NO_x)[1-11,14,17,23,27] - Two mechanisms form nitrogen oxides, oxidation of fuelbound nitrogen and thermal fixation of the nitrogen in combustion air. Fuel NO_x are primarily a function of the nitrogen content of the fuel and the available oxygen (on the average, about 45 percent of the fuel nitrogen is converted to NO_x, but this may vary from 20 to 70 percent). Thermal NO_x, on the other hand, are largely a function of peak flame temperature and available oxygen - factors which depend on boiler size, firing configuration and operating practices.

Fuel nitrogen conversion is the more important NO_x forming mechanism in residual oil boilers. Except in certain large units having unusually high peak flame temperatures, or in units firing a low nitrogen residual oil, fuel NO_x will generally account for over 50 percent of the total NO_x generated. Thermal fixation, on the other hand, is the dominant NO_x forming mechanism in units firing distillate oils, primarily because of the negligible nitrogen content in these lighter oils. Because distillate oil fired boilers usually have low heat release rates, however, the quantity of thermal NO_x formed in them is less than that of larger units.

A number of variables influence how much NO_x is formed by these two mechanisms. One important variable is firing configuration. Nitrogen oxide emissions from tangentially (corner) fired boilers are, on the average, less than those of horizontally opposed units. Also important are the firing practices employed during boiler operation. Limited excess air firing, flue gas recirculation, staged combustion, or some combination thereof may result in NO_x reductions from 5 to 60 percent. See Section 1.4 for a discussion of these techniques. Load reduction can likewise decrease NO_x production. Nitrogen oxides emissions may be reduced from 0.5 to 1 percent for each percentage reduction in load from full load operation. It should be noted that most of these variables, with the exception

of excess air, influence the NO_x emissions only of large oil fired boilers. Limited excess air firing is possible in many small boilers, but the resulting NO_x reductions are not nearly as significant.

Other Pollutants[18-21] - As a rule, only minor amounts of volatile organic compounds (VOC) and carbon monoxide will be emitted from the combustion of fuel oil. The rate at which VOCs are emitted depends on combustion efficiency. Emissions of trace elements from oil fired boilers are relative to the trace element concentrations of the oil.

Organic compounds present in the flue gas streams of boilers include aliphatic and aromatic hydrocarbons, esters, ethers, alcohols, carbonyls, carboxylic acids and polycylic organic matter. The last includes all organic matter having two or more benzene rings.

Trace elements are also emitted from the combustion of fuel oil. The quantity of trace elements emitted depends on combustion temperature, fuel feed mechanism and the composition of the fuel. The temperature determines the degree of volatilization of specific compounds contained in the fuel. The fuel feed mechanism affects the separation of emissions into bottom ash and fly ash.

If a boiler unit is operated improperly or is poorly maintained, the concentrations of carbon monoxide and VOCs may increase by several orders of magnitude.

1.3.3 Controls

The various control devices and/or techniques employed on oil fired boilers depend on the type of boiler and the pollutant being controlled. All such controls may be classified into three categories, boiler modification, fuel substitution and flue gas cleaning.

Boiler Modification[1-4,8-9,13-14,23] - Boiler modification includes any physical change in the boiler apparatus itself or in its operation. Maintenance of the burner system, for example, is important to assure proper atomization and subsequent minimization of any unburned combustibles. Periodic tuning is important in small units for maximum operating efficiency and emission control, particularly of smoke and CO. Combustion modifications, such as limited excess air firing, flue gas recirculation, staged combustion and reduced load operation, result in lowered NO_x emissions in large facilities. See Table 1.3-1 for specific reductions possible through these combustion modifications.

Fuel Substitution[3,5,12,28] - Fuel substitution, the firing of "cleaner" fuel oils, can substantially reduce emissions of a number of pollutants. Lower sulfur oils, for instance, will reduce SO_x emissions in all boilers, regardless of size or type of unit or

grade of oil fired. Particulates generally will be reduced when a lighter grade of oil is fired. Nitrogen oxide emissions will be reduced by switching to either a distillate oil or a residual oil with less nitrogen. The practice of fuel substitution, however, may be limited by the ability of a given operation to fire a better grade of oil and by the cost and availability thereof.

Flue Gas Cleaning[15-16,28] - Flue gas cleaning equipment generally is employed only on large oil fired boilers. Mechanical collectors, a prevalent type of control device, are primarily useful in controlling particulates generated during soot blowing, during upset conditions, or when a very dirty, heavy oil is fired. During these situations, high efficiency cyclonic collectors can effect up to 85 percent control of particulate. Under normal firing conditions or when a clean oil is combusted, cyclonic collectors will not be nearly as effective due to a high percentage of small particles (less than 3 microns diameter) being emitted.

Electrostatic precipitators are commonly used in oil fired power plants. Older precipitators which are also small precipitators generally remove 40 to 60 percent of the particulate matter emissions. Due to the low ash content of the oil, greater collection efficiency may not be required. Today, new or rebuilt electrostatic precipitators have collection efficiencies of up to 90 percent.

Scrubbing systems have been installed on oil-fired boilers, especially of late, to control both sulfur oxides and particulate. These systems can achieve SO_2 removal efficiencies of up to 90 to 95 percent and provide particulate control efficiencies on the order of 50 to 60 percent.

1. W. S. Smith, Atmospheric Emissions from Fuel Oil Combustion: An Inventory Guide, 999-AP-2, U.S. Department of Health, Education and Welfare, Cincinnati, OH, November 1962.

2. J. A. Danielson (ed.), Air Pollution Engineering Manual, Second Edition, AP-40, U.S. Environmental Protection Agency, Research Triangle Park, NC, 1973. Out of Print.

3. A. Levy, et al., A Field Investigation of Emissions from Fuel Oil Combustion for Space Heating, API Bulletin 4099, Battelle Columbus Laboratories, Columbia, OH, November 1971.

4. R. E. Barrett, et al., Field Investigation of Emissions from Combustion Equipment for Space Heating, EPA-R2-73-084a, U.S. Environmental Protection Agency, Research Triangle Park, NC, June 1973.

5. G. A. Cato, et al., Field Testing: Application of Combustion Modifications To Control Pollutant Emissions from Industrial Boilers - Phase I, EPA-650/2-74-078a, U.S. Environmental Protection Agency, Research Triangle Park, NC, October 1974.

6. G. A. Cato, et al., Field Testing: Application of Combustion Modifications To Control Pollutant Emissions from Industrial Boilers - Phase II, EPA-600/2-76-086a, U.S. Environmental Protection Agency, Research Triangle Park, NC, April 1976.

7. Particulate Emission Control Systems for Oil-Fired Boilers, EPA-450/3-74-063, U.S. Environmental Protection Agency, Research Triangle Park, NC, December 1974.

8. W. Bartok, et al., Systematic Field Study of NO_X Emission Control Methods for Utility Boilers, APTD-1163, U.S. Environmental Protection Agency, Research Triangle Park, NC, December 1971.

9. A. R. Crawford, et al., Field Testing: Application of Combustion Modifications To Control NO_X Emissions from Utility Boilers, EPA-650/2-74-066, U.S. Environmental Protection Agency, Research Triangle Park, NC, June 1974.

10. J. F. Deffner, et al., Evaluation of Gulf Econojet Equipment with Respect to Air Conservation, Report No. 731RC044, Gulf Research and Development Company, Pittsburgh, PA, December 18, 1972.

11. C. E. Blakeslee and H. E. Burbach, "Controlling NO_X Emissions from Steam Generators", Journal of the Air Pollution Control Association, 23:37-42, January 1973.

12. C. W. Siegmund, "Will Desulfurized Fuel Oils Help?", American Society of Heating, Refrigerating and Air Conditioning Engineers Journal, 11:29-33, April 1969.

13. F. A. Govan, et al., "Relationships of Particulate Emissions Versus Partial to Full Load Operations for Utility-sized Boilers", Proceedings of Third Annual Industrial Air Pollution Control Conference, Knoxville, TN, March 29-30, 1973.

14. R. E. Hall, et al., A Study of Air Pollutant Emissions from Residential Heating Systems, EPA-650/2-74-003, U.S. Environmental Protection Agency, Research Triangle Park, NC, January 1974.

15. Flue Gas Desulfurization: Installations and Operations, U.S. Environmental Protection Agency, Washington, DC, September 1974.

16. Proceedings: Flue Gas Desulfurization Symposium - 1973, EPA-650/2-73-038, U.S. Environmental Protection Agency, Research Triangle Park, NC, December 1973.

17. R. J. Milligan, et al., Review of NO_X Emission Factors for Stationary Fossil Fuel Combustion Sources, EPA-450/4-79-021, U.S. Environmental Protection Agency, Research Triangle Park, NC, September 1979.

18. N. F. Suprenant, et al., Emissions Assessment of Conventional Stationary Combustion Systems: Volume I. Gas and Oil-Fired Residential Heating Sources, EPA-600/7-79-029b, U.S. Environmental Protection Agency, Research Triangle Park, NC, May 1979.

19. C. C. Shih, et al., Emissions Assessment of Conventional Stationary Combustion Systems: Volume III. External Combustion Sources for Electricity Generation. EPA Contract No. 68-02-2197, TRW Inc., Redondo Beach, CA, November 1980.

20. N. F. Suprenant, et al., Emissions Assessment of Conventional Stationary Combustion Systems: Volume IV. Commercial Institutional Combustion Sources, EPA Contract No. 68-02-2197, GCA Corporation, Bedford, MA, October 1980.

21. N. F. Suprenant, et al., Emissions Assessment of Conventional Stationary Combustion Systems: Volume V. Industrial Combustion Sources, EPA Contract No. 68-02-2197, GCA Corporation, Bedford, MA, October 1980.

22. Fossil Fuel Fired Industrial Boilers - Background Information for Proposed Standards (Draft EIS), Office of Air Quality Planning and Standards, U.S. Environmental Protection Agency, Research Triangle Park, NC, June 1980.

23. K. J. Lim, et al., Technology Assessment Report for Industrial Boiler Applications: NO_x Combustion Modification, EPA-600/7-79-178f, U.S. Environmental Protection Agency, Research Triangle Park, NC, December 1979.

24. Emission Test Reports, Docket No. OAQPS-78-1, Category II-I-257 through 265, U.S. Environmental Protection Agency, Research Triangle Park, NC, 1972 through 1974.

25. Primary Sulfate Emissions from Coal and Oil Combustion, Industrial Environmental Research Laboratory, U.S. Environmental Protection Agency, Research Triangle Park, NC, February 1980.

26. C. Leavitt, et al., Environmental Assessment of an Oil-Fired Controlled Utility Boiler, EPA-600/7-80-087, U.S. Environmental Protection Agency, Research Triangle Park, NC, April 1980.

27. W. A. Carter and R. J. Tidona, Thirty-day Field Tests of Industrial Boilers: Site 2 - Residual-oil-fired Boiler, EPA-600/7-80-085b, U.S. Environmental Protection Agency, Research Triangle Park, NC, April 1980.

28. G. R. Offen, et al., Control of Particulate Matter from Oil Burners and Boilers, EPA-450/3-76-005, U.S. Environmental Protection Agency, Research Triangle Park, NC, April 1976.

1.4 NATURAL GAS COMBUSTION

1.4.1 General[1,2]

Natural gas is one of the major fuels used throughout the country. It is used mainly for power generation, for industrial process steam and heat production, and for domestic and commercial space heating. The primary component of natural gas is methane, although varying amounts of ethane and smaller amounts of nitrogen, helium and carbon dioxide are also present. Gas processing plants are required for recovery of liquefiable constituents and removal of hydrogen sulfide (H_2S) before the gas is used (see Natural Gas Processing, Section 9.2). The average gross heating value of natural gas is approximately 9350 kilocalories per standard cubic meter (1050 British thermal units/standard cubic foot), usually varying from 8900 to 9800 kcal/scm (1000 to 1100 Btu/scf).

Because natural gas in its original state is a gaseous, homogenous fluid, its combustion is simple and can be precisely controlled. Common excess air rates range from 10 to 15 percent, but some large units operate at lower excess air rates to increase efficiency and reduce nitrogen oxide (NO_x) emissions.

1.4.2 Emissions and Controls[3-26]

Even though natural gas is considered to be a relatively clean fuel, some emissions can occur from the combustion reaction. For example, improper operating conditions, including poor mixing, insufficient air, etc., may cause large amounts of smoke, carbon monoxide and hydrocarbons to be produced. Moreover, because a sulfur containing mercaptan is added to natural gas for detection purposes, small amounts of sulfur oxides will also be produced in the combustion process.

Nitrogen oxides are the major pollutants of concern when burning natural gas. Nitrogen oxide emissions are functions of combustion chamber temperature and combustion product cooling rate. Emission levels vary considerably with the type and size of unit and with operating conditions.

In some large boilers, several operating modifications may be employed for NO control. Staged combustion for example, including off-stoichiometric firing and/or two stage combustion, can reduce NO emissions by 5 to 50 percent.[26] In off-stoichiometric firing, also called "biased firing", some burners are operated fuel rich, some fuel lean, and others may supply air only. In two stage combustion, the burners are operated fuel rich (by introducing only 70 to 90 percent stoichiometric air), with combustion being completed by air injected above the flame zone through second stage "NO-ports". In staged combustion, NO_x emissions are reduced because the bulk of combustion occurs under fuel rich conditions.

Other NO_x reducing modifications include low excess air firing and flue gas recirculation. In low excess air firing, excess air levels are kept as low as possible without producing unacceptable levels of unburned combustibles (carbon monoxide, volatile organic compounds and smoke) and/or other operational problems. This technique can reduce NO_x emissions by 5 to 35 percent, primarily because of lack of oxygen during combustion. Flue gas recirculation into the primary combustion zone, because the flue gas is relatively cool and oxygen deficient, can also lower NO_x emissions by 4 to 85 percent, depending on the amount of gas recirculated. Flue gas recirculation is best suited for new boilers. Retrofit application would require extensive burner modifications. Initial studies indicate that low NO_x burners (20 to 50 percent reduction) and ammonia injection (40 to 70 percent reduction) also offer NO_x emission reductions.

Combinations of the above combustion modifications may also be employed to reduce NO_x emissions further. In some boilers, for instance, NO_x reductions as high as 70 to 90 percent have been produced by employing several of these techniques simultaneously. In general, however, because the net effect of any of these combinations varies greatly, it is difficult to predict what the reductions will be in any given unit.

Emission factors for natural gas combustion are presented in Table 1.4-1, and factor ratings in Table 1.4-2.

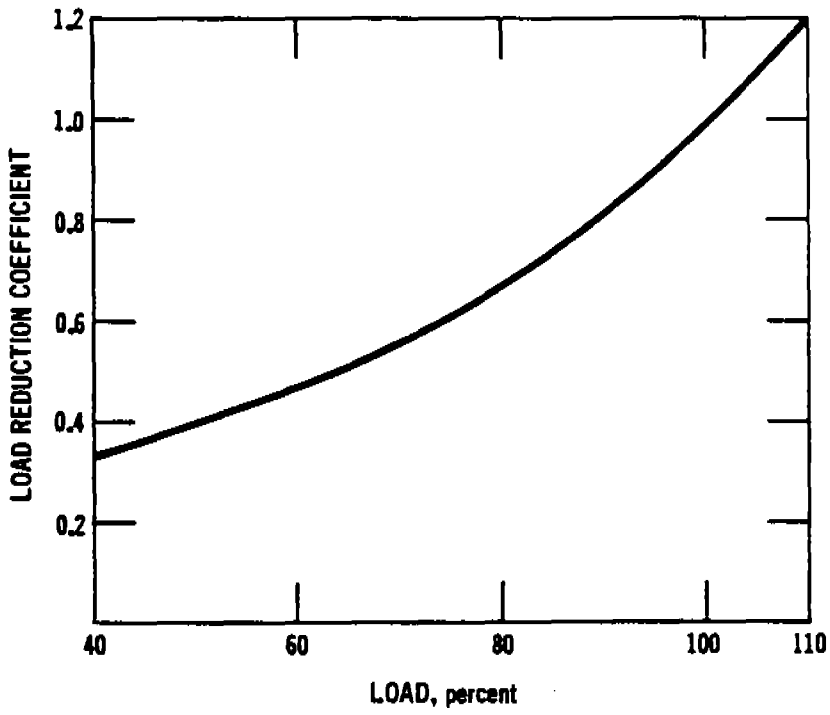

Figure 1.4-1. Load reduction coefficient as function of boiler load. (Used to determine NO_x reductions at reduced loads in large boilers.)

TABLE 1.4-1. UNCONTROLLED EMISSION FACTORS FOR NATURAL GAS COMBUSTION[a]

Furnace Size & Type (10^6 Btu/hr heat input)	Particulates[b]		Sulfur Dioxide[c]		Nitrogen Oxide[d,e]		Carbon Monoxide[f,g]		Volatile Organics Nonmethane		Volatile Organics Methane	
	$kg/10^6m^3$	$lb/10^6ft^3$	$kg/10^6m^3$	$lb/10^6ft^3$	$kg/10^6m^3$	$lb/10^6ft^3$	$kg/10^6m^3$	$lb/10^6ft^3$	$kg/10^6m^3$	$lb/10^6ft^3$	$kg/10^6m^3$	$lb/10^6ft^3$
Utility boilers (>100)	16-80	1-5	9.6	0.6	8800[h]	550[h]	640	40	23	1.4	4.8	0.3
Industrial boilers (10 - 100)	16-80	1-5	9.6	0.6	2240	140	560	35	44	2.8	48	3
Domestic and commercial boilers (<10)	16-80	1-5	9.6	0.6	1600	100	320	20	84	5.3	43	2.7

[a]All emission factors are expressed as weight per volume fuel fired.
[b]References 15-18.
[c]Reference 4 (based on an average sulfur content of natural gas of 4600 $g/10^6$ Nm^3 (2000 $gr/10^6$ scf).
[d]References 4-5,7-8,11,14,18-19,21.
[e]Expressed as NO_2. Test results indicate that about 95 weight % of NO_x is NO.
[f]References 4,7-8,16,18,22-25.
[g]References 16 and 18. May increase 10 to 100 times with improper operation or maintenance.
[h]Use 4400 $kg/10^6$ m^3 (275 $lb/10^6ft^3$) for tangentially fired units. At reduced loads, multiply this factor by the load reduction coefficient given in Figure 1.4-1. See text for potential NO_x reductions by combustion modifications. Note that the NO_x reduction from these modifications will also occur at reduced load conditions.

TABLE 1.4-2. FACTOR RATINGS FOR NATURAL GAS COMBUSTION

Furnace Type	Particulates	Sulfur Oxides	Nitrogen Oxides	Carbon Monoxides	VOC Nonmethane	VOC Methane
Utility boiler	B	A	A	A	C	C
Industrial boiler	B	A	A	A	C	C
Commercial boiler	B	A	A	A	D	D
Residential furnace	B	A	A	A	D	D

References for Section 1.4

1. D. M. Hugh, et al., Exhaust Gases from Combustion and Industrial Processes, EPA Contract No. EHSD 71-36, Engineering Science, Inc., Washington, DC, October 2, 1971.

2. J. H. Perry (ed.), Chemical Engineer's Handbook, 4th Edition, McGraw-Hill, New York, NY, 1963.

3. H. H. Hovey, et al., The Development of Air Contaminant Emission Tables for Non-process Emissions, New York State Department of Health, Albany, NY, 1965.

4. W. Bartok, et al., Systematic Field Study of NO_x Emission Control Methods for Utility Boilers, APTD-1163, U.S. Environmental Protection Agency, Research Triangle Park, NC, December 1971.

5. F. A. Bagwell, et al., "Oxides of Nitrogen Emission Reduction Program for Oil and Gas Fired Utility Boilers", Proceedings of the American Power Conference, 14:683-693, April 1970.

6. R. L. Chass and R. E. George, "Contaminant Emissions from the Combustion of Fuels", Journal of the Air Pollution Control Association 10:34-42, February 1980.

7. H. E. Dietzmann, A Study of Power Plant Boiler Emissions, Final Report No. AR-837, Southwest Research Institute, San Antonio, TX, August 1972.

8. R. E. Barrett, et al., Field Investigation of Emissions from Combustion Equipment for Space Heating, EPA-R2-73-084, U.S. Environmental Protection Agency, Research Triangle Park, NC, June 1973.

9. Private communication with the American Gas Association Laboratories, Cleveland, OH, May 1970.

10. Unpublished data on domestic gas fired units, National Air Pollution Control Administration, U.S. Department of Health, Education and Welfare, Cincinnati, OH, 1970.

11. C. E. Blakeslee and H. E. Burbock, "Controlling NO_x Emissions from Steam Generators", Journal of the Air Pollution Control Association, 23:37-42, January 1979.

12. L. K. Jain, et al., "State of the Art" for Controlling NO_x Emissions: Part 1, Utility Boilers, EPA Contract No. 68-02-0241, Catalytic, Inc., Charlotte, NC, September 1972.

13. J. W. Bradstreet and R. J. Fortman, "Status of Control Techniques for Achieving Compliance with Air Pollution Regulations by the Electric Utility Industry", Presented at the 3rd Annual Industrial Air Pollution Control Conference, Knoxville, TN, March 1973.

14. Study of Emissions of NO_x from Natural Gas-Fired Steam Electric Power Plants in Texas, Phase II, Vol. 2, Radian Corporation, Austin, TX, May 8, 1972.

15. N. F. Suprenant, et al., Emissions Assessment of Conventional Stationary Combustion Systems: Volume I. Gas and Oil-Fired Residential Heating Sources, EPA-600/7-79-029b, U.S. Environmental Protection Agency, Research Triangle Park, NC, May 1979.

16. C. C. Shih, et al., Emissions Assessment of Conventional Stationary Combustion Systems: Volume III. External Combustion Sources for Electricity Generation, EPA Contract No. 68-02-2197, TRW, Inc., Redondo Beach, CA, November 1980.

17. N. F. Suprenant, et al., Emissions Assessment of Conventional Stationary Combustion Systems: Volume IV. Commercial Institutional Combustion Sources, EPA Contract No. 68-02-2197, GCA Corporation, Bedford, MA, October 1980.

18. N. F. Suprenant, et al., Emissions Assessment of Conventional Stationary Combustion Systems: Volume V. Industrial Combustion Sources, EPA Contract No. 68-02-2197, GCA Corporation, Bedford, MA, October 1980.

19. R. J. Milligan, et al., Review of NO_x Emission Factors for Stationary Fossil Fuel Combustion Sources, EPA-450/4-79-021, U.S. Environmental Protection Agency, Research Triangle Park, NC, September 1979.

20. W. H. Thrasher and D. W. Dewerth, Evaluation of the Pollutant Emissions from Gas-Fired Water Heaters, Research Report No. 1507, American Gas Association, Cleveland, OH, April 1977.

21. W. H. Thrasher and D. W. Dewerth, Evaluation of the Pollutant Emissions from Gas-Fired Forced Air Furnaces, Research Report No. 1503, American Gas Association, Cleveland, OH, May 1975.

22. G. A. Cato, et al., Field Testing: Application of Combustion Modification To Control Pollutant Emissions from Industrial Boilers, Phase I, EPA-650/2-74-078a, U.S. Environmental Protection Agency, Washington, DC, October 1974.

23. G. A. Cato, et al., Field Testing: Application of Combustion Modification To Control Pollutant Emissions from Industrial Boilers, Phase II, EPA-600/2-76-086a, U.S. Environmental Protection Agency, Washington, DC, April 1976.

24. W. A. Carter and H. J. Buening, Thirty-day Field Tests of Industrial Boilers - Site 5, EPA Contract No. 68-02-2645, KVB Engineering, Inc., Irvine, CA, May 1981.

25. W. A. Carter and H. J. Buening, Thirty-day Field Tests of Industrial Boilers - Site 6, EPA Contract No. 68-02-2645, KVB Engineering, Inc., Irvine, CA, May 1981.

26. K. J. Lim, et al., Technology Assessment Report for Industrial Boiler Applications: NO_x Combustion Modification, EPA Contract No. 68-02-3101, Acurex Corporation, Mountain View, CA, December 1979.

1.5 LIQUEFIED PETROLEUM GAS COMBUSTION

1.5.1 General[1]

Liquefied petroleum gas (LPG) consists of butane, propane, or a mixture of the two, and of trace amounts of propylene and butylene. This gas, obtained from oil or gas wells as a gasoline refining byproduct, is sold as a liquid in metal cylinders under pressure and, therefore, is often called bottled gas. LPG is graded according to maximum vapor pressure, with Grade A being mostly butane, Grade F mostly propane, and Grades B through E being varying mixtures of butane and propane. The heating value of LPG ranges from 6,480 kcal/liter (97,400 Btu/gallon) for Grade A to 6,030 kcal/liter (90,500 Btu/gallon) for Grade F. The largest market for LPG is the domestic/commercial market, followed by the chemical industry and the internal combustion engine.

1.5.2 Emissions[1]

LPG is considered a "clean" fuel because it does not produce visible emissions. However, gaseous pollutants such as carbon monoxide, volatile organic compounds (VOC's) and nitrogen oxides do occur. The most significant factors affecting these emissions are burner design, adjustment and venting. Improper design, blocking and clogging of the flue vent, and lack of combustion air result in improper combustion and the emission of aldehydes, carbon monoxide, hydrocarbons and other organics. Nitrogen oxide emissions are a function of a number of variables including temperature, excess air and residence time in the combustion zone. The amount of sulfur dioxide emitted is directly proportional to the amount of sulfur in the fuel. Emission factors for LPG combustion are presented in Table 1.5-1.

TABLE 1.5-1. EMISSION FACTORS FOR LPG COMBUSTION[a]
EMISSION FACTOR RATING: C

Furnace Type and Fuel	Particulates		Sulfur Oxides[b]		Nitrogen Oxides[c]		Carbon Monoxide		Volatile Organics Nonmethane		Volatile Organics Methane	
	kg/10^3l	lb/10^3gal	kg/10^3l	lb/10^3gal	kg/10^3l	lb/10^3gal	kg/10^3l	lb/10^3gal	kg/10^3l	lb/10^3gal	kg/10^3l	lb/10^3gal
Industrial												
Butane	0.01-0.06	0.10-0.47	0.01S	0.09S	1.58	13.2	0.4	3.3	0.03	0.26	0.03	0.28
Propane	0.01-0.05	0.09-0.44	0.01S	0.09S	1.49	12.4	0.37	3.1	0.03	0.25	0.03	0.27
Domestic/ commercial												
Butane	0.01-0.06	0.10-0.47	0.01S	0.09S	1.13	9.4	0.23	1.9	0.06	0.5	0.03	0.25
Propane	0.01-0.05	0.09-0.44	0.01S	0.09S	1.05	8.8	0.22	1.8	0.06	0.47	0.03	0.24

[a]Assumes emissions (except sulfur oxides) are the same, on a heat input basis, as for natural gas combustion.
[b]Expressed as SO_2. S equals the sulfur content expressed in g/100 m^3 gas vapor. For example, if sulfur content is 0.366 g/100m^3 (0.16 gr/100ft^3) vapor, the SO_2 emission factor would be 0.01 x 0.366 or 0.0037 kg SO_2/10^3 liters (0.09 x 0.16 or 0.014 lb of SO_2/1000 gal) butane burned.
[c]Expressed as NO_2.

References for Section 1.5

1. Air Pollutant Emission Factors, Final Report, Contract No. CPA-22-69-119, Resources Research, Inc., Reston, VA, Durham, NC, April 1970.

2. E. A. Clifford, A Practical Guide to Liquified Petroleum Gas Utilization, New York, Moore Publishing Co., 1962.

1.6 WOOD WASTE COMBUSTION IN BOILERS

1.6.1 General[1-3]

The burning of wood waste in boilers is mostly confined to those industries where it is available as a byproduct. It is burned both to obtain heat energy and to alleviate possible solid waste disposal problems. Wood waste may include large pieces like slabs, logs and bark strips as well as cuttings, shavings, pellets and sawdust, and heating values for this waste range from about 4,400 to 5,000 kilocalories per kilogram of fuel dry weight (7,940 to 9,131 Btu/lb). However, because of typical moisture contents of 40 to 75 percent, the heating values for many wood waste materials as fired range as low as 2,200 to 3,300 kilocalories per kilogram of fuel. Generally, bark is the major type of waste burned in pulp mills, and a varying mixture of wood and bark waste, or wood waste alone, are most frequently burned in the lumber, furniture and plywood industries.

1.6.2 Firing Practices[1-3]

A variety of boiler firing configurations is used for burning wood waste. One common type in smaller operations is the dutch oven, or extension type of furnace with a flat grate. This unit is widely used because it can burn fuels with a very high moisture content. Fuel is fed into the oven through apertures at the top of a firebox and is fired in a cone shaped pile on a flat grate. The burning is done in two stages, drying and gasification, and combustion of gaseous products. The first stage takes place in a cell separated from the boiler section by a bridge wall. The combustion stage takes place in the main boiler section. The dutch oven is not responsive to changes in steam load, and it provides poor combustion control.

In a fuel cell oven, the fuel is dropped onto suspended fixed grates and is fired in a pile. Unlike the dutch oven, the fuel cell also uses combustion air preheating and repositioning of the secondary and tertiary air injection ports to improve boiler efficiency.

In many large operations, more conventional boilers have been modified to burn wood waste. These units may include spreader stokers with traveling grates, vibrating grate stokers, etc., as well as tangentially fired or cyclone fired boilers. The most widely used of these configurations is the spreader stoker. Fuel is dropped in front of an air jet which casts the fuel out over a moving grate, spreading it in an even thin blanket. The burning is done in three stages in a single chamber, (1) drying, (2) distillation and burning of volatile matter and (3) burning of carbon. This type of operation has a fast response to load changes, has improved combustion control and can be operated with multiple fuels. Natural gas or oil are often fired in spreader stoker boilers as auxiliary fuel. This is done to maintain constant steam when the wood waste

supply fluctuates and/or to provide more steam than is possible from the waste supply alone.

Sander dust is often burned in various boiler types at plywood, particle board and furniture plants. Sander dust contains fine wood particles with low moisture content (less than 20 weight percent). It is fired in a flaming horizontal torch, usually with natural gas as an ignition aid or supplementary fuel.

1.6.3 Emissions and Controls[4-28]

The major pollutant of concern from wood boilers is particulate matter, although other pollutants, particularly carbon monoxide, may be emitted in significant amounts under poor operating conditions. These emissions depend on a number of variables, including (1) the composition of the waste fuel burned, (2) the degree of flyash reinjection employed and (3) furnace design and operating conditions.

The composition of wood waste depends largely on the industry whence it originates. Pulping operations, for example, produce great quantities of bark that may contain more than 70 weight percent moisture and sand and other noncombustibles. Because of this, bark boilers in pulp mills may emit considerable amounts of particulate matter to the atmosphere unless they are well controlled. On the other hand, some operations such as furniture manufacture produce a clean dry (5 to 50 weight percent moisture) wood waste that results in relatively few particulate emissions when properly burned. Still other operations, such as sawmills, burn a variable mixture of bark and wood waste that results in particulate emissions somewhere between these two extremes.

Furnace design and operating conditions are particularly important when firing wood waste. For example, because of the high moisture content that can be present in this waste, a larger than usual area of refractory surface is often necessary to dry the fuel before combustion. In addition, sufficient secondary air must be supplied over the fuel bed to burn the volatiles that account for most of the combustible material in the waste. When proper drying conditions do not exist, or when secondary combustion is incomplete, the combustion temperature is lowered, and increased particulate, carbon monoxide and hydrocarbon emissions may result. Lowering of combustion temperature generally results in decreased nitrogen oxide emissions. Also, emissions can fluctuate in the short term due to significant variations in fuel moisture content over short periods of time.

Flyash reinjection, which is common in many larger boilers to improve fuel efficiency, has a considerable effect on particulate emissions. Because a fraction of the collected flyash is reinjected into the boiler, the dust loading from the furnace, and consequently from the collection device, increases significantly per unit of wood waste burned. It is reported that full reinjection can cause

TABLE 1.6-1. EMISSION FACTORS FOR WOOD AND BARK COMBUSTION IN BOILERS

Pollutant/Fuel Type/Control	kg/Mg	lb/ton	Emission Factor Rating
Particulate[a,b]			
Bark[c]			
Multiclone, with fly ash reinjection[d]	7	14	B
Multiclone, without fly ash reinjection[d]	4.5	9	B
Uncontrolled	24	47	B
Wood/bark mixture[e]			
Multiclone, with fly ash reinjection[f]	3	6	C
Multiclone, without fly ash reinjection[f]	2.7	5.3	C
Uncontrolled[g]	3.6	7.2	C
Wood[h]			
Uncontrolled	4.4	8.8	C
Sulfur Dioxide[j]	0.075 (0.01 - 0.2)	0.15 (0.02 - 0.4)	B
Nitrogen Oxides (as NO_2)[k]			
50,000 - 400,000 lb steam/hr	1.4	2.8	B
<50,000 lb steam/hr	0.34	0.68	B
Carbon Monoxide[m]	2 - 24	4 - 47	C
VOC			
Nonmethane[n]	0.7	1.4	D
Methane[p]	0.15	0.3	E

[a]References 2, 4, 9, 17-18. For boilers burning gas or oil as an auxiliary fuel, all particulates are assumed to result from only wood waste fuel.

[b]May include condensible hydrocarbons consisting of pitches and tars, mostly from back half catch of EPA Method 5. Tests reported in Reference 20 indicate that condensible hydrocarbons account for 4% of total particulate weight.

[c]Based on fuel moisture content of about 50%.

[d]After control equipment, assuming an average collection efficiency of 80%. Data from References 4, 7-8 indicate that 50% fly ash reinjection increases the dust load at the cyclone inlet 1.2 to 1.5 times, while 100% fly ash reinjection increases the load 1.5 to 2 times without reinjection.

[e]Based on fuel moisture content of 33%.

[f]Based on large dutch ovens and spreader stokers (averaging 23,430 kg steam/hr) with steam pressures from 20 - 75 kpa (140 - 530 psi).

[g]Based on small dutch ovens and spreader stokers (usually operating <9075 kg steam/hr), with pressures from 5 - 30 kpa (35 - 230 psi). Careful air adjustments and improved fuel separation and firing were used on some units, but the effects cannot be isolated.

[h]References 12-13, 19, 27. Wood waste includes cuttings, shavings, sawdust and chips, but not bark. Moisture content ranges from 3 - 50 weight %. Based on small units (<3000 kg steam/hr) in New York and North Carolina.

[j]Reference 23. Based on tests of fuel sulfur content and sulfur dioxide emissions at four mills burning bark. The lower limit of the range (in parentheses) should be used for wood, and higher values for bark. A heating value of 5000 kcal/kg (9000 BTU/lb) is assumed. The factors are based on the dry weight of fuel.

[k]References 7, 24-26. Several factors can influence emission rates, including combustion zone temperatures, excess air, boiler operating conditions, fuel moisture and fuel nitrogen content. Factors on a dry weight basis.

[m]Reference 30. Factors on a dry weight basis.

[n]References 20, 30. Nonmethane VOC reportedly consists of compounds with a high vapor pressure such as alpha pinene.

[p]Reference 30. Based on an approximation of methane/nonmethane ratio, which is very variable. Methane, expressed as a % of total volatile organic compounds, varied from 0 - 74 weight %.

a tenfold increase in the dust loadings of some systems, although increases of 1.2 to 2 times are more typical for boilers using 50 to 100 percent reinjection. A major factor affecting this dust loading increase is the extent to which the sand and other noncombustibles can successfully be separated from the flyash before reinjection to the furnace.

Although reinjection increases boiler efficiency from 1 to 4 percent and minimizes the emissions of uncombusted carbon, it also increases boiler maintenance requirements, decreases average flyash particle size and makes collection more difficult. Properly designed reinjection systems should separate sand and char from the exhaust gases, to reinject the larger carbon particles to the furnace and to divert the fine sand particles to the ash disposal system.

Several factors can influence emissions, such as boiler size and type, design features, age, load factors, wood species and operating procedures. In addition, wood is often cofired with other fuels. The effect of these factors on emissions is difficult to quantify. It is best to refer to the references for further information.

The use of multitube cyclone mechanical collectors provides the particulate control for many hogged boilers. Usually, two multicyclones are used in series, allowing the first collector to remove the bulk of the dust and the second collector to remove smaller particles. The collection efficiency for this arrangement is from 65 to 95 percent. Low pressure drop scrubbers and fabric filters have been used extensively for many years. On the West Coast, pulse jets have been used.

Emission factors for wood waste boilers are presented in Table 1.6-1.

References for Section 1.6

1. Steam, 38th Edition, Babcock and Wilcox, New York, NY, 1972.

2. Atmospheric Emissions from the Pulp and Paper Manufacturing Industry, EPA-450/1-73-002, U.S. Environmental Protection Agency, Research Triangle Park, NC, September 1973.

3. C-E Bark Burning Boilers, C-E Industrial Boiler Operations, Combustion Engineering, Inc., Windsor, CT, 1973.

4. A. Barron, Jr., "Studies on the Collection of Bark Char throughout the Industry", Journal of the Technical Association of the Pulp and Paper Industry, 53(8):1441-1448, August 1970.

5. H. Kreisinger, "Combustion of Wood [illegible] ", Mechanical Engineering, 61:115-120, February 1[illegible]

6. Air Pollution Handbook, P.L. Magill (ed.), McGraw-Hill Book Co., New York, NY, 1956.

7. Air Pollutant Emission Factors, HEW Contract No. CPA-22-69-119, Resources Research, Inc., Reston, VA, April 1970.

8. J.F. Mullen, A Method for Determining Combustible Loss, Dust Emissions, and Recirculated Refuse for a Solid Fuel Burning System, Combustion Engineering, Inc., Windsor, CT, 1966.

9. Source test data, Alan Lindsey, U.S. Environmental Protection Agency, Atlanta, GA, May 1973.

10. H.K. Effenberger, et al., "Control of Hogged Fuel Boiler Emissions: A Case History", Journal of the Technical Association of the Pulp and Paper Industry, 56(2):111-115, February 1973.

11. Source test data, Oregon Department of Environmental Quality, Portland, OR, May 1973.

12. Source test data, Illinois Environmental Protection Agency, Springfield, IL, June 1973.

13. J.A. Danielson (ed.), Air Pollution Engineering Manual (2nd Ed.), AP-40, U.S. Environmental Protection Agency, Research Triangle Park, NC, 1973. Out of Print.

14. H. Droege and G. Lee, "The Use of Gas Sampling and Analysis for the Evaluation of Teepee Burners", presented at the Seventh Conference on the Methods in Air Pollution Studies, Los Angeles, CA, January 1967.

15. D.C. Junge and K. Kwan, "An Investigation of the Chemically Reactive Constituents of Atmospheric Emissions from Hog-Fuel Boilers in Oregon", Paper No. 73-AP-21, presented at the Annual Meeting of the Pacific Northwest International Section of the Air Pollution Control Association, November 1973.

16. S.F. Galeano and K.M. Leopold, "A Survey of Emissions of Nitrogen Oxides in the Pulp Mill", Journal of the Technical Association of the Pulp and Paper Industry, 56(3):74-76, March 1973.

17. P.B. Bosserman, "Wood Waste Boiler Emissions in Oregon State", Paper No. 76-AP-23, presented at the Annual Meeting of the Pacific Northwest International Section of the Air Pollution Control Association, September 1976.

18. Source test data, Oregon Department of Environmental Quality, Portland, OR, September 1975.

19. Source test data, New York State Department of Environmental Conservation, Albany, NY, May 1974.

20. P.B. Bosserman, "Hydrocarbon Emissions from Wood Fired Boilers", Paper No. 77-AP-22, presented at the Annual Meeting of the Pacific Northwest International Section of the Air Pollution Control Association, November 1977.

21. Control of Particulate Emissions from Wood Fired Boilers, EPA-340/1-77-026, U.S. Environmental Protection Agency, Washington, DC, 1978.

22. Wood Residue Fired Steam Generator Particulate Matter Control Technology Assessment, EPA-450/2-78-044, U.S. Environmental Protection Agency, Research Triangle Park, NC, October 1978.

23. H.S. Oglesby and R.O. Blosser, "Information on the Sulfur Content of Bark and Its Contribution to SO_2 Emissions When Burned as a Fuel", Journal of the Air Pollution Control Association, 30(7):769-772, July 1980.

24. A Study of Nitrogen Oxides Emissions from Wood Residue Boilers, Technical Bulletin No. 102, National Council of the Paper Industry for Air and Stream Improvement, New York, NY, November 1979.

25. R.A. Kester, Nitrogen Oxide Emissions from a Pilot Plant Spreader Stoker Bark Fired Boiler, Department of Civil Engineering, University of Washington, Seattle, WA, December 1979.

26. A. Nunn, NO_x Emission Factors for Wood Fired Boilers, EPA-600/7-79-219, U.S. Environmental Protection Agency, Research Triangle Park, NC, September 1979.

27. C.R. Sanborn, Evaluation of Wood Fired Boilers and Wide Bodied Cyclones in the State of Vermont, U.S. Environmental Protection Agency, Boston, MA, March 1979.

28. Source test data, North Carolina Department of Natural Resources and Community Development, Raleigh, NC, June 1981.

29. Nonfossil Fueled Boilers - Emission Test Report: Weyerhaeuser Company, Longview, Washington, EPA-80-WFB-10, U.S. Environmental Protection Agency, Office of Air Quality Planning and Standards, Research Triangle Park, NC, March 1981.

30. A Study of Wood-Residue Fired Power Boiler Total Gaseous Nonmethane Organic Emissions in the Pacific Northwest, Technical Bulletin No. 109, National Council of the Paper Industry for Air and Stream Improvement, New York, NY, September 1980.

1.7 LIGNITE COMBUSTION

1.7.1 General[1-4]

Lignite is a relatively young coal with properties intermediate to those of bituminous coal and peat. It has a high moisture content (35 to 40 weight percent) and a low wet basis heating value (1500 to 1900 kilocalories) and generally is burned only close to where it is mined, in some midwestern States and in Texas. Although a small amount is used in industrial and domestic situations, lignite is mainly used for steam/electric production in power plants. In the past, lignite was burned mainly in small stokers, but today the trend is toward use in much larger pulverized coal fired or cyclone fired boilers.

The major advantages of firing lignite are that, in certain geographical areas, it is plentiful, relatively low in cost and low in sulfur content (0.4 to 1 wet basis weight percent). Disadvantages are that more fuel and larger facilities are necessary to generate a unit of power than is the case with bituminous coal. There are several reasons for this. First, the higher moisture content means that more energy is lost in the gaseous products of combustion, which reduces boiler efficiency. Second, more energy is required to grind lignite to the combustion specified size, especially in pulverized coal fired units. Third, greater tube spacing and additional soot blowing are required because of the higher ash fouling tendencies. Fourth, because of its lower heating value, more fuel must be handled to produce a given amount of power, since lignite usually is not cleaned or dried before combustion (except for some drying that may occur in the crusher or pulverizer and during transfer to the burner). Generally, no major problems exist with the handling or combustion of lignite when its unique characteristics are taken into account.

1.7.2 Emissions and Controls[2-11]

The major pollutants of concern when firing lignite, as with any coal, are particulates, sulfur oxides, and nitrogen oxides. Volatile organic compound (VOC) and carbon monoxide emissions are quite low under normal operating conditions.

Particulate emission levels appear most dependent on the firing configuration in the boiler. Pulverized coal fired units and spreader stokers, which fire all or much of the lignite in suspension, emit the greatest quantity of flyash per unit of fuel burned. Cyclones, which collect much of the ash as molten slag in the furnace itself, and stokers (other than spreader), which retain a large fraction of the ash in the fuel bed, both emit less particulate matter. In general, the relatively high sodium content of lignite lowers particulate emissions by causing more of the resulting flyash to deposit on the boiler tubes. This is especially so in pulverized coal fired units wherein a high fraction of the ash is

TABLE 1.7-1. EMISSION FACTORS FOR EXTERNAL COMBUSTION OF LIGNITE COAL[a]

Firing Configuration	Particulates[b]		Sulfur dioxide[c]		Nitrogen oxides		Carbon Monoxide	VOC Nonmethane	VOC Methane
	kg/Mg	lb/ton	kg/Mg	lb/ton	kg/Mg	lb/ton			
Pulverized Coal Fired Dry Bottom	3.1A	6.3A	15S	30S	6[e,f]	12[e,f]	g	g	g
Cyclone Furnace	3.3A	6.7A	15S	30S	8.5	17	g	g	g
Spreader Stoker	3.4A	6.8A	15S	30S	3	6	g	g	g
Other Stokers	1.5A	2.9A	15S	30S	3	6	g	g	g

[a]For uncontrolled emissions, and should be applied to lignite consumption as fired.
[b]References 5-6,9,12. A is the wet basis percent ash content of the lignite.
[c]References 2,5-6. S is the wet basis percent sulfur content of the lignite by weight. For a high sodium/ash lignite ($Na_2O \geq 8\%$), use 8.5S kg/Mg (17S lb/ton); for a low sodium/ash lignite ($Na_2O \leq 2\%$), use 17.5S kg/Mg (35S lb/ton). When the sodium/ash content is unknown, use 15S kg/Mg (30S lb/ton). The conversion of sulfur to sulfur dioxide is shown as a function of alkali ash constituents in References 10-11.
[d]References 2,5,7-8. Expressed as NO_2.
[e]Use 7 kg/Mg (14 lb/ton) for front wall fired and horizontally opposed wall fired units, and 4 kg/Mg (8 lb/ton) for tangentially fired units.
[f]May be reduced 20 - 40% with low excess air firing and/or staged combustion in front fired and opposed wall fired units and cyclones.
[g]Factors reported in Table 1.1-1 may be used, based on the similarity of lignite combustion and bituminous coal combustion.

suspended in the combustion gases and can readily come into contact with the boiler surfaces.

Nitrogen oxide emissions are mainly a function of the boiler firing configuration and excess air. Stokers produce the lowest NO levels, mainly because most existing units are much smaller than the other firing type and have lower peak flame temperatures. In most boilers, regardless of firing configuration, lower excess air during combustion results in lower NO emissions.

Sulfur oxide emissions are a function of the alkali (especially sodium) content of the lignite ash. Unlike most fossil fuel combustion, in which over 90 percent of the fuel sulfur is emitted as SO_2, a significant fraction of the sulfur in lignite reacts with the ash components during combustion and is retained in the boiler ash deposits and flyash. Tests have shown that less than 50 percent of the available sulfur may be emitted as SO_2 when a high sodium lignite is burned, whereas more than 90 percent may be emitted from low sodium lignite. As a rough average, about 75 percent of the fuel sulfur will be emitted as SO_2, the remainder being converted to various sulfate salts.

Newer lignite fired utility boilers are equipped with large electrostatic precipitators that may achieve as high as 99.5 percent particulate control. Older and smaller electrostatic precipitators operate at about 95 percent efficiency. Older industrial and commercial units use cyclone collectors that normally achieve 60 to 80 percent collection efficiency on lignite flyash. Flue gas desulfurization systems currently are in operation on several lignite fired utility boilers. These systems are identical to those used on bituminous coal fired boilers (see Section 1.1).

Nitrogen oxide reductions of up to 40 percent can be achieved by changing the burner geometry, controlling excess air and making other changes in operating procedures. The techniques are identical for bituminous and lignite coal.

TABLE 1.7-2. RATINGS OF EMISSION FACTORS FOR LIGNITE COMBUSTION

Firing Configuration	Particulates	Sulfur Dioxide	Nitrogen Dioxide
Pulverized Coal Fired Dry Bottom	A	A	A
Cyclone Furnace	C	A	A
Spreader Stoker	B	B	C
Other Stokers	B	C	D

Emission factors for particulates, sulfur dioxide and nitrogen oxides are presented in Table 1.7-1. Based on the similarity of lignite combustion and bituminous coal combustion, emission factors for carbon monoxide and volatile organic compounds reported in Table 1.1-1 may be used.

References for Section 1.7

1. Kirk-Othmer Encyclopedia of Chemical Technology, Volume 12, Second Edition, John Wiley and Sons, New York, NY, 1967.

2. G.H. Gronhovd, et al., "Some Studies on Stack Emissions from Lignite Fired Powerplants", Presented at the 1973 Lignite Symposium, Grand Forks, ND, May 1973.

3. Standards Support and Environmental Impact Statement: Promulgated Standards of Performance for Lignite Fired Steam Generators: Volumes I and II, EPA-450/2-76-030a,b, U.S. Environmental Protection Agency, Research Triangle Park, NC, December 1976.

4. 1965 Keystone Coal Buyers Manual, McGraw-Hill, Inc., New York, NY, 1965.

5. Source test data on lignite fired power plants, North Dakota State Department of Health, Bismarck, ND, December 1973.

6. G.H. Gronhovd, et al., "Comparison of Ash Fouling Tendencies of High and Low Sodium Lignite from a North Dakota Mine", Proceedings of the American Power Conference, Volume XXVIII, 1966.

7. A.R. Crawford, et al., Field Testing: Application of Combustion Modification To Control NO Emissions from Utility Boilers, EPA-650/2-74-066, U.S. Environmental Protection Agency, Research Triangle Park, NC, June 1974.

8. "Nitrogen Oxides Emission Measurements for Lignite Fired Power Plants", EPA Project Report No. 75-LSG-3, Office of Air Quality Planning and Standards, U.S. Environmental Protection Agency, Research Triangle Park, NC, 1974.

9. Coal Fired Power Plant Trace Element Study, A Three Station Comparison, U.S. Environmental Protection Agency, Denver, CO, September 1975.

10. C. Castaldini and M. Angwin, Boiler Design and Operating Variables Affecting Uncontrolled Sulfur Emissions from Pulverized Coal Fired Steam Generators, EPA-450/3-77-047, U.S. Environmental Protection Agency, Research Triangle Park, NC, December 1977.

11. C.C. Shih, et al., Emissions Assessment of Conventional Stationary Combustion Systems, Volume III: External Combustion Sources for Electricity Generation, EPA Contract No. 68-02-2197, TRW Inc., Redondo Beach, CA, November 1980.

12. Source test data on lignite fired cyclone boilers, North Dakota State Department of Health, Bismarck, ND, March 1982.

1.8 BAGASSE COMBUSTION IN SUGAR MILLS

1.8.1 General[1]

Bagasse is the fibrous residue from sugar cane that has been processed in a sugar mill. (See Section 6.12 for a brief general description of sugar cane processing.) It is fired in boilers to eliminate a large solid waste disposal problem and to produce steam and electricity to meet the mill's power requirements. Bagasse represents about 30 percent of the weight of the raw sugar cane. Because of the high moisture content (usually at least 50 percent, by weight) a typical heating value of wet bagasse will range from 3000 to 4000 Btu/lb (1660 to 2220 kcal/kg). Fuel oil may be fired with bagasse when the mill's power requirements cannot be met by burning only bagasse or when bagasse is too wet to support combustion.

The United States sugar industry is located in Florida, Louisiana, Hawaii, Texas, and Puerto Rico. Except in Hawaii, where raw sugar production takes place year round, sugar mills operate seasonally, from 2 to 5 months per year.

Bagasse is commonly fired in boilers employing either a solid hearth or traveling grate. In the former, bagasse is gravity fed through chutes and forms a pile of burning fibers. The burning occurs on the surface of the pile with combustion air supplied through primary and secondary ports located in the furnace walls. This kind of boiler is common in older mills in the sugar cane industry. Newer boilers, on the other hand, may employ traveling-grate stokers. Underfire air is used to suspend the bagasse, and overfired air is supplied to complete combustion. This kind of boiler requires bagasse with a higher percentage of fines, a moisture content not over 50 percent, and more experienced operating personnel.

1.8.2 Emissions and Controls[1]

Particulate is the major pollutant of concern from bagasse boilers. Unless an auxiliary fuel is fired, few sulfur oxides will be emitted because of the low sulfur content (<0.1 percent, by weight) of bagasse. Some nitrogen oxides are emitted, although the quantities appear to be somewhat lower (on an equivalent heat input basis) than are emitted from conventional fossil fuel boilers.

Particulate emissions are reduced by the use of multi-cyclones and wet scrubbers. Multi-cyclones are reportedly 20 to 60 percent efficient on particulate from bagasse boilers, whereas scrubbers (either venturi or the spray impingement type) are usually 90 percent or more efficient. Other types of control equipment have been investigated but have not been found to be practical.

Emission factors for bagasse fired boilers are shown in Table 1.8-1.

Table 1.8-1. EMISSION FACTORS FOR UNCONTROLLED BAGASSE BOILERS
EMISSION FACTOR RATING: C

	Emission factors			
	lb/10^3 lb steam[a]	g/kg steam[a]	lb/ton bagasse[b]	kg/MT bagasse[b]
Particulate[c]	4	4	16	8
Sulfur oxides	d	d	d	d
Nitrogen oxides[e]	0.3	0.3	1.2	0.6

[a] Emission factors are expressed in terms of the amount of steam produced, as most mills do not monitor the amount of bagasse fired. These factors should be applied only to that fraction of steam resulting from bagasse combustion. If a significant amount (>25% of total Btu input) of fuel oil is fired with the bagasse, the appropriate emission factors from Table 1.3-1 should be used to estimate the emission contributions from the fuel oil.

[b] Emissions are expressed in terms of wet bagasse, containing approximately 50 percent moisture, by weight. As a rule of thumb, about 2 pounds (2 kg) of steam are produced from 1 pound (1kg) of wet bagasse.

[c] Multi-cyclones are reportedly 20 to 60 percent efficient on particulate from bagasse boilers. Wet scrubbers are capable of effecting 90 or more percent particulate control. Based on Reference 1.

[d] Sulfur oxide emissions from the firing of bagasse alone would be expected to be negligible as bagasse typically contains less than 0.1 percent sulfur, by weight. If fuel oil is fired with bagasse, the appropriate factors from Table 1.3-1 should be used to estimate sulfur oxide emissions.

[e] Based on Reference 1.

Reference for Section 1.8

1. Background Document: Bagasse Combustion in Sugar Mills. Prepared by Environmental Science and Engineering, Inc., Gainesville, Fla., for Environmental Protection Agency under Contract No. 68-02-1402, Task Order No. 13. Document No. EPA-450/3-77-007. Research Triangle Park, N.C. October 1976.

1.9 RESIDENTIAL FIREPLACES

1.9.1 General[1-2]

Fireplaces are used mainly in homes, lodges, etc., for supplemental heating and for aesthetic effects. Wood is the most common fuel for fireplaces, but, coal, compacted wood waste "logs", paper and rubbish may also be burned. Fuel is intermittently added to the fire by hand.

Fireplaces can be divided into two broad categories, 1) masonry, generally brick fireplaces, assembled on site integral to a structure and 2) prefabricated, usually metal, fireplaces installed on site as a package with appropriate ductwork.

Masonry fireplaces typically have large fixed openings to the firebed and dampers above the combustion area in the chimney to limit room air and heat losses when the fireplace is not being used. Some masonry fireplaces are designed or retrofitted with doors and louvers to reduce the intake of combustion air during use.

Many varieties of prefabricated fireplaces are now available on the market. One general class is the freestanding fireplace. The most common freestanding fireplace models consist of an inverted sheet metal funnel and stovepipe directly above the fire bed. Another class is the "zero clearance" fireplace, an iron or heavy gauge steel firebox lined with firebrick on the inside and surrounded by multiple steel walls spaced for air circulation. Zero clearance fireplaces can be inserted into existing masonry fireplace openings, thus they are sometimes called "inserts". Some of these units are equipped with close fitting doors and have operating and combustion characteristics similar to wood stoves (see Section 1.10, Residential Wood Stoves). Prefabricated fireplaces are commonly equipped with louvers and glass doors to reduce the intake of combustion air, and some are surrounded by ducts through which floor level air is drawn by natural convection and is heated and returned to the room.

Masonry fireplaces usually heat a room by radiation, with a significant fraction of the combustion heat lost in the exhaust gases or through the fireplace walls. Moreover, some of the radiant heat entering the room must go toward warming the air that is pulled into the residence to make up for the air drawn up the chimney. The net effect is that masonry fireplaces are usually inefficient heating devices. Indeed, in cases where combustion is poor, where the outside air is cold, or where the fire is allowed to smolder (thus drawing air into a residence without producing appreciable radiant heat energy), a net heat loss may occur in a residence from use of a fireplace. Fireplace heating efficiency may be improved by a number of measures that either reduce the excess air rate or transfer some of the heat back into the residence that would normally be lost in the exhaust gases or through the fireplace walls. As noted above, such measures are commonly incorporated into prefabricated units. As a result, the energy efficiencies of prefabricated fireplaces are slightly higher than those of masonry fireplaces.

1.9.2 Emissions[3-10]

The major pollutants of concern from fireplaces are unburnt combustibles, including carbon monoxide, gaseous organics and particulate matter (i.e., smoke). Significant quantities of unburnt combustibles are produced because fireplaces are inefficient combustion devices, because of high uncontrolled excess air rates and the absence of any sort of secondary combustion. The latter is especially important in wood burning because of its high volatile matter content, typically 80 percent on a dry weight basis. In additon to unburnt combustibles, lesser amounts of nitrogen oxides and sulfur oxides are emitted.

Polycyclic organic material (POM), a minor but potentially important component of wood smoke, is a group of organic compounds which includes potential carcinogens such as benzo(a)pyrene (BaP). POM results from the combination of free radical species formed in the flame zone, primarily as a consequence of incomplete combustion. Under reducing conditions, radical chain propagation is enhanced, allowing the buildup of complex organic material such as POM. POM is generally found in or on smoke particles, although some sublimation into the vapor phase is probable.

Another important constituent of wood smoke is creosote. This tar-like substance will burn if the fire is sufficiently hot, but at lower temperatures, it may deposit on cool surfaces in the exhaust system. Creosote deposits are a fire hazard in the flue, but they can be reduced if the exhaust ductwork is insulated to prevent creosote condensation or the exhaust system is cleaned regularly to remove any buildup.

Fireplace emissions are highly variable and are a function of many wood characteristics and operating practices. In general, conditions which promote a fast burn rate and a higher flame intensity will enhance secondary combustion and thereby lower emissions. Conversely, higher emissions will result from a slow burn rate and a lower flame intensity. Such generalizations apply particularly to the earlier stages of the burning cycle, when significant quantities of combustible volatile matter are being driven out of the wood. Later in the burning cycle, when all of the volatile matter has been driven out of the wood, the charcoal that remains burns with relatively few emissions.

Emission factors and corresponding factor ratings for wood combustion in residential fireplaces are given in Table 1.9-1.

TABLE 1.9-1. EMISSION FACTORS FOR RESIDENTIAL FIREPLACES

Pollutant	Wood[a]		Emission Factor Ratings
	g/kg	lb/ton	
Particulate[b]	14	28	C
Sulfur oxides[c]	0.2	0.4	A
Nitrogen oxides[d]	1.7	3.4	C
Carbon monoxide[e]	85	170	C
VOC[f]			
Methane	-	-	
Nonmethane	13	26	D

[a]Based on tests burning primarily oak, fir or pine, with moisture content ranging from 15 - 35%.
[b]References 1, 3-4, 8-10. Includes condensible organics (back half catch of EPA Method 5 or similar test method), which alone accounts for 54 - 76% of the total mass collected by both the front and back half catches (Reference 4). POM is carried by suspended particulate matter and has been found to range from 0.017 - 0.044 g/kg (References 1, 4) which may include BaP of up to 1.7 mg/kg (Reference 1).
[c]References 2, 4.
[d]Expressed as NO_2. References 3-4, 8, 10.
[e]References 1, 3-4, 6, 8-10.
[f]References 1, 3-4, 6, 10. Dash = no data available.

References for Section 1.9

1. W. D. Snowden, et al., Source Sampling of Residential Fireplaces for Emission Factor Development, EPA-450/3-76-010, U. S. Environmental Protection Agency, Research Triangle Park, NC, November 1975.

2. D. G. DeAngelis, et al., Source Assessment: Residential Combustion of Wood, EPA-600/2-80-042b, U. S. Environmental Protection Agency, Washington, DC, March 1980.

3. P. Kosel, et al., "Emissions from Residential Fireplaces", CARB Report C-80-027, California Air Resources Board, Sacramento, CA, April 1980.

4. D. G. DeAngelis, et al., Preliminary Characterization of Emissions from Wood Fired Residential Combustion Equipment, EPA-600/7-80-040, U. S. Environmental Protection Agency, Washington, DC, March 1980.

5. H. I. Lips and K. J. Lim, Assessment of Emissions from Residential and Industrial Wood Combustion, EPA Contract No. 68-02-3188, Acurex Corporation, Mountain View, CA, April 1981.

6. A. C. S. Hayden and R. W. Braaten, "Performance of Domestic Wood Fired Appliances", Presented at the 73rd Annual Meeting of the Air Pollution Control Association, Montreal, Canada, June 1980.

7. J. A. Peters, POM Emissions from Residential Woodburning: An Environmental Assessment, Monsanto Research Corporation, Dayton, OH, May 1981.

8. L. Clayton, et al., "Emissions from Residential Type Fireplaces", Source Tests 24C67, 26C, 29C67, 40C67, 41C67, 65C67 and 66C67, Bay Area Air Pollution Control District, San Francisco, CA, January 31, 1968.

9. Source Testing for Fireplaces, Stoves, and Restaurant Grills in Vail, Colorado (Draft), EPA Contract No. 68-01-1999, Pedco Environmental, Inc., December 1977.

10. J. L. Muhlbaier, "Gaseous and Particulate Emissions from Residential Fireplaces," Publication GMR-3588, General Motors Research Laboratories, Warren, MI, March 1981.

1.10 RESIDENTIAL WOOD STOVES

1.10.1 General[1-2]

Wood stoves are used primarily as domestic space heaters to supplement conventional heating systems. The two basic designs for wood stoves are radiating and circulating. Common construction materials include cast iron, heavy gauge sheet metal and stainless steel. Radiating type stoves transfer heat to the room by radiation from the hot stove walls. Circulating type stoves have double wall construction with louvers on the exterior wall to permit the conversion of radiant energy to warm convection air. Properly designed, these stoves range in heating efficiency from 50 to 70 percent. Radiant stoves have proven to be somewhat more efficient than the circulating type.

The thoroughness of combustion and the amount of heat transferred from a stove, regardless of whether it is a radiating or circulatory model, depend heavily on firebox temperature, residence time and turbulence (mixing). The "three Ts" (temperature, time and turbulence) are affected by air flow patterns through the stove and by the mode of stove operation. Many stove designs have internal baffles that increase the residence time of flue gases, thus promoting heat transfer. The use of baffles and secondary combustion air may also help to reduce emissions by promoting mixing and more thorough combustion. Unless the secondary air is adequately preheated, it may serve to quench the flue gas, thus retarding, rather than enhancing, secondary combustion. Secondary combustion air systems should be designed to deliver the proper amount of secondary air at the right location with adequate turbulence and sufficient temperature to promote true secondary combustion.

Stoves are further categorized by the air flow pattern through the burning wood within the stoves. Example generic designs - updraft, downdraft, crossdraft and "S-flow" - are shown schematically in Figure 1.10-1.

In the updraft air flow type of stove, air enters at the base of the stove and passes through the wood to the stovepipe at the top. Secondary air enters above the wood to assist in igniting unburned volatiles in the combustion gases. Updraft stoves provide very little gas phase residence time, which is needed for efficient transfer of heat from the gases to the walls of the stove and/or stovepipe.

The downdraft air flow type of stove initially behaves like an updraft. A vertical damper is opened at the top rear to promote rapid combustion. When a hot bed of coals is developed, the damper is closed, and the flue gases are then forced back down through the bed of coals before going out the flue exit.

The side or cross draft is equipped with a vertical baffle (open at the bottom) and an adjustable damper at the top, similar to the downdraft. The damper is open when combustion is initiated, to generate hot coals and adequate draft. The damper is then closed. The gases must then move down

under the vertical baffle, the flame is developed horizontally to the fuel bed, and ideally the gases and flame come in contact at the baffle point before passing out the flue exit.

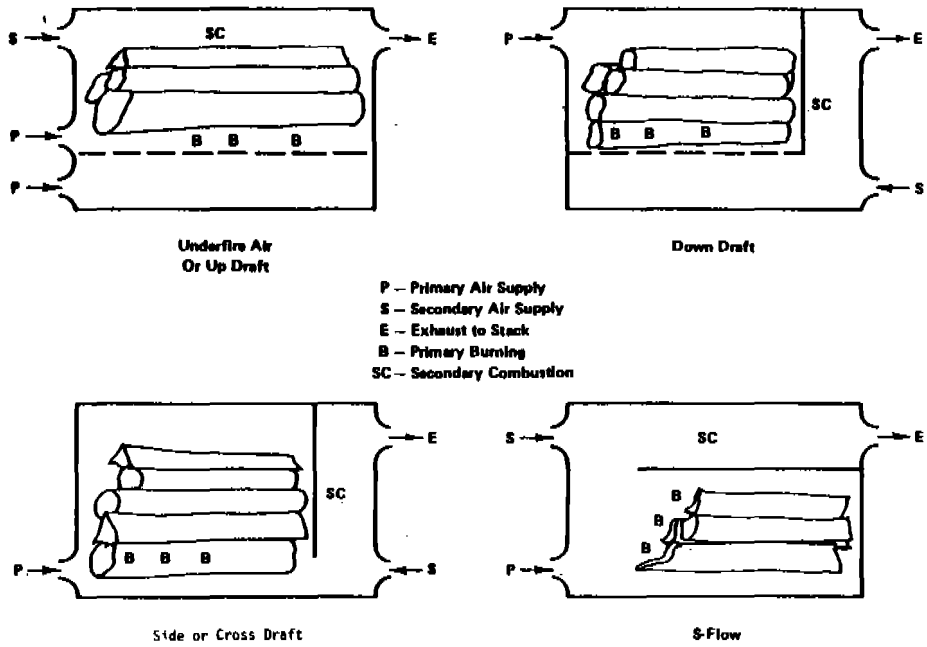

Figure 1.10-1. Generic designs of wood stoves based on flow paths

The S-flow, or horizontal baffle, stove is equipped with both a primary and a secondary air inlet, like the updraft stove. Retention time within the stove is a function of both the rate of burn and the length of the smoke path. To lengthen the retention time, gases are kept from exiting directly up the flue by a metal baffle plate located several inches above the burning wood. The baffle plate absorbs a considerable amount of heat and reflects and radiates much of it back to the firebox. The longer gas phase residence time results in improved combustion when the proper amounts of air are provided, and it enhances heat transfer from the gas phase.

Softwoods and hardwoods are the most common fuels for residential stoves. Coal and waste fuels, which burn at significantly higher temperature than cordwood, are not included in computing emission factors because of the relative scarcity of test data available. The performance of various heaters within a given type will vary, depending on how a particular design uses its potential performance advantages. Much of the available emissions data came from studies conducted on stoves designed for woodburning.

1.10.2 Emissions and Controls[3-25]

Residential combustion of wood produces atmospheric emissions of particulates, sulfur oxides, nitrogen oxides, carbon monoxide, organic materials including polycyclic organic matter (POM), and mineral constituents. Organic species, carbon monoxide and, to a large extent, the particulate

matter emissions result from incomplete combustion of the fuel. Efficient combustion tends to limit emissions of carbon monoxide and volatile organic compounds by oxidizing these compounds to carbon dioxide and water. Sulfur oxides arise from oxidation of fuel sulfur, while nitrogen oxides are formed both from fuel nitrogen and by the combination of atmospheric nitrogen with oxygen in the combustion zone. Mineral constituents in the particulate emissions result from minerals released from the wood matrix during combustion and entrained in the combustion gases.

Wood smoke is composed of unburned fuel - combustible gases, droplets and solid particulates. Part of the organic compounds in smoke often condenses in the chimney or flue pipe. This tar-like substance is called creosote. If the combustion zone temperature is sufficiently high, creosote burns with the other organic compounds in the wood. However, creosote burns at a higher temperature than other chemicals in the wood, so there are times when it is not burned with the other products. Creosote deposits are a fire hazard, but they can be reduced if the exhaust ductwork is insulated to prevent creosote condensation, or the exhaust system is cleaned regularly to remove any buildup.

Polycyclic organic material (POM), a minor but potentially important component of wood smoke, is a group of organic compounds which includes potential carcinogens such as benzo(a)pyrene (BaP). POM results from the combination of free radical species formed in the flame zone, primarily as a consequence of incomplete combustion. Under reducing conditions, radical chain propagation is enhanced, allowing the buildup of complex organic material such as POM. POM is generally found in or on smoke particles, although some sublimation into the vapor phase is probable.

Emissions from any one stove are highly variable, and they correspond directly to different stages in the burning cycle. A new charge of wood produces a quick drop in firebox temperature and a dramatic increase in emissions, primarily organic matter. When all of the volatiles have been driven off, the charcoal stage of the burn is characterized by relatively clean emissions.

Emissions of particulate, carbon monoxide and volatile organic compounds were found to depend on burn rate. Emissions increase as burn rates decrease, for the great majority of the closed combustion devices currently on the market. A burn rate of approximately three kilograms per hour has been determined representative of actual woodstove operation.

Wood is a complex fuel, and the combined processes of combustion and pyrolysis which occur in a wood heater are affected by changes in the composition of the fuel, moisture content and the effective burning surface area. The moisture content of wood depends on the type of wood and the amount of time it has been dried (seasoned). The water in the wood increases the amount of heat required to raise the wood to its combustion point, thus reducing the rate of pyrolysis until moisture is released. Wood moisture has been found to have little affect on emissions. Dry wood (less than 15 percent moisture content) may produce slightly higher emissions than the commonly occurring 30 to 40 percent moisture wood. However, firing very wet wood may produce higher emissions due to smoldering and reduced burn rate. The size of the wood also has a large effect on the rate of pyrolysis. For

smaller pieces of wood, there is a shorter distance for the pyrolysis products to diffuse, a larger surface area-to-mass ratio, and a reduction in the time required to heat the entire piece of wood. One effect of log size is to change the distribution of organics among the different effluents (creosote, particulate matter and condensible organics) for a given burn rate. These results also indicate that the distribution of the total organic effluent among creosote, particulate matter and condensibles is a function of firebox and sample probe temperatures.

Results of ultimate analysis (for carbon, hydrogen and oxygen) of dry wood types are within one to two percent for the majority of all species. The inherent difference between softwood and hardwood is the greater amount of resins in softwoods, which increases their heating value by weight.

Several combustion modification techniques are available to reduce emissions from wood stoves, with varying degrees of effectiveness. Some techniques relate to modified stove design and others to operator practices. Proper modifications of stove design (1) will reduce pollutant formation in the fuel magazine or in the primary combustion zone or (2) will cause previously formed emissions to be destroyed in the primary or secondary combustion zones.

A recent wood stove emission control development is the catalytic converter, a transfer technology from the automobile. The catalytic converter is a noble metal catalyst, such as palladium, coated on ceramic honeycomb substrates and placed directly in the exhaust gas flow, where it reduces the ignition temperature (flash point) of the unburnt hydrocarbons and carbon monoxide. Retrofit catalysts tend to be installed in the flue pipe farther downstream of the woodstove firebox than built-in catalysts. Thus, adequate catalyst operating temperatures may not be achieved with the add on type, resulting in potential flue gas blockage and fire hazards. Limited testing of built-in designs indicates that carbon monoxide and total hydrocarbon emissions are reduced considerably, and efficiency is improved, by the catalyst effect. Some initial findings also indicate that emissions of nitrogen oxides may be increased by as much as a factor of three. Additionally, there is concern that combustion temperatures achieved in stoves operating at representative burn rates (approximately 3 kilograms per hour or less) are not adequate to "light off" the catalyst. Thus, the catalytic unit might reduce emissions but not under all burning conditions.

Emission factors and corresponding emission factor ratings for wood combustion in residential wood stoves are presented in Table 1.10-1.

TABLE 1.10-1. EMISSION FACTORS FOR RESIDENTIAL WOOD STOVES

Pollutant	Wood[a]		Emission Factor Ratings
	g/kg	lb/ton	
Particulate[b,c]	21	42	C
Sulfur oxides[d]	0.2	0.4	A
Nitrogen oxides[e]	1.4	2.8	C
Carbon monoxide[f,c]	130	260	C
VOC[g,c]			
Methane	0.5	1.0	D
Nonmethane	51	100	D

[a]Based on tests burning primarily oak, fir or pine, with moisture content ranging from 15 - 35%.
[b]References 3-6, 8-10, 13-14, 17, 22, 24-25. Includes condensible organics (back half catch of EPA Method 5 or similar test method), which alone account for 54 - 76% of the total mass collected by both front and back half catches (Reference 4). POM is carried by suspended particulate matter and has been found to range from 0.19 - 0.37 g/kg (References 4, 14-15, 22-23) which may include BaP of up to 1.4 mg/kg (Reference 15).
[c]Emissions were determined at burn rates of 3 kg/hr or less. If >3 kg/hr, emissions may decrease by as much as 55 - 60% for particulates and VOC, and 25% for carbon monoxide.
[d]References 2, 4.
[e]Expressed as NO_2. References 3-4, 15, 17, 22-23.
[f]References 3-4, 10-11, 13, 15, 17, 22-23.
[g]References 3-4, 11, 15, 17, 22-23.

References for Section 1.10

1. H. I. Lips and K. J. Lim, Assessment of Emissions from Residential and Industrial Wood Combustion, EPA Contract No. 68-02-3188, Acurex Corporation, Mountain View, CA, April 1981.

2. D. G. DeAngelis, et al., Source Assessment: Residential Combustion of Wood, EPA-600/2-80-042b, U. S. Environmental Protection Agency, Washington, DC, March 1980.

3. J. A. Cooper, "Environmental Impact of Residential Wood Combustion Emissions and Its Implications", Journal of the Air Pollution Control Association, 30(8):855-861, August 1980.

4. D. G. DeAngelis, et al., Preliminary Characterization of Emissions from Wood-fired Residential Combustion Equipment, EPA-600/7-80-040, U. S. Environmental Protection Agency, Washington, DC, March 1980.

5. S. S. Butcher and D. I. Buckley, "A Preliminary Study of Particulate Emissions from Small Wood Stoves", Journal of the Air Pollution Control Association, 27(4):346-348, April 1977.

6. S. S. Butcher and E. M. Sorenson, "A Study of Wood Stove Particulate Emissions", Journal of the Air Pollution Control Association, 24(9):724-728, July 1979.

7. J. W. Shelton, et al., "Wood Stove Testing Methods and Some Preliminary Experimental Results", Presented at the American Society of Heating, Refrigeration and Air Conditioning Engineers (ASHRAE) Symposium, Atlanta, GA, January 1978.

8. D. Rossman, et al., "Evaluation of Wood Stove Emissions", Oregon Department of Environmental Quality, Portland, OR, December 1980.

9. P. Tiegs, et al., "Emission Test Report on Four Selected Wood Burning Home Heating Devices", Oregon Department of Energy, Portland, OR, January 1981.

10. J. A. Peters and D. G. DeAngelis, High Altitude Testing of Residential Wood-fired Combustion Equipment, EPA-600/2-81-127, U. S. Environmental Protection Agency, Washington, DC, September 1981.

11. A. C. S. Hayden and R. W. Braaten, "Performance of Domestic Wood-fired Appliances", Presented at 73rd Annual Meeting of the Air Pollution Control Association, Montreal, Canada, June 1980.

12. R. J. Brandon, "An Assessment of the Efficiency and Emissions of Ten Wood-fired Furnaces", Presented at the Conference on Wood Combustion Environmental Assessment, New Orleans, LA, February 1981.

13. B. R. Hubble and J. B. L. Harkness, "Results of Laboratory Tests on Wood-stove Emissions and Efficiencies", Presented at the Conference on Wood Combustion Environmental Assessment, New Orleans, LA, February 1981.

14. B. R. Hubble, et al., "Experimental Measurements of Emissions from Residential Wood-burning Stoves", Presented at the International Conference on Residential Solid Fuels, Portland, OR, June 1981.

15. J. M. Allen and W. M. Cooke, "Control of Emissions from Residential Wood Burning by Combustion Modification", EPA Contract No. 68-02-2686, Battelle Laboratories, Columbus, OH, November 1980.

16. J. R. Duncan, et al., "Air Quality Impact Potential from Residential Wood-burning Stoves", TVA Report 80-7.2, Tennessee Valley Authority, Muscle Shoals, AL, March 1980.

17. P. Kosel, et al., "Emissions from Residential Fireplaces", CARB Report C-80-027, California Air Resources Board, Sacramento, CA, April 1980.

18. S. G. Barnett and D. Shea, "Effects of Wood Burning Stove Design on Particulate Pollution", Oregon Department of Environmental Quality, Portland, OR, July 1980.

19. J. A. Peters, POM Emissions from Residential Wood-burning: An Environmental Assessment, Monsanto Research Corporation, Dayton, OH, May 1981.

20. Source Testing for Fireplaces, Stoves, and Restaurant Grills in Vail, Colorado (Draft), EPA Contract No. 68-01-1999, Pedco Environmental, Inc., December 1977.

21. A. C. S. Hayden and R. W. Braaten, "Effects of Firing Rate and Design on Domestic Wood Stove Performance", Presented at the Residential Wood and Coal Combustion Specialty Conference, Louisville, KY, March 1982.

22. C. V. Knight and M. S. Graham, "Emissions and Thermal Performance Mapping for an Unbaffled, Airtight Wood Appliance and a Box Type Catalytic Applicance", Proceedings of 1981 International Conference on Residential Solid Fuels, Oregon Graduate Center, Portland, OR, June 1981.

23. C. V. Knight et al., "Tennessee Valley Authority Residential Wood Heater Test Report: Phase I Testing", Tennessee Valley Authority, Chattanooga, TN, November 1982.

24. Richard L. Poirot and Cedric R. Sanborn, "Improved Combustion Efficiency of Residential Wood Stoves", U. S. Department of Energy, Washington, DC, September 1981.

25. Cedric R. Sanborn, et al., "Waterbury, Vermont: A Case Study of Residential Woodburning", Vermont Agency of Environmental Conservation, Montpelier, VT, August 1981.

1.11 WASTE OIL COMBUSTION

1.11.1 General

The largest source of waste oil is used automotive crankcase oil, originating mostly from automobile service stations, and usually being found with small amounts of other automotive fluids. Other sources of waste oil include metal working lubricants, heavy hydrocarbon fuels, animal and vegetable oils and fats, and industrial oil materials.

In 1975, 57 percent of waste crankcase oil was consumed as alternative fuel in conventional boiler equipment (Section 1.3). The remainder was refined (15 percent), blended into road oil or asphalt (15 percent), or used for other nonfuel purposes (13 percent).[1]

1.11.2 Emissions and Controls

Lead emissions from burning waste oil depend on the lead content of the oil and on operating conditions. Lead content may vary from 800 to 11,200 ppm.[2] Average concentrations have been suggested as 6,000[1] and as 10,000 ppm[3]. During normal operation, about 50 percent of the lead is emitted as particulate with flue gas.[2,4] Combustion of fuel containing 10 percent waste oil gives particulate ranging from 14 to 19 percent lead. Ash content from combustion of fuels containing waste oil is higher than that for distillate or residual fuel oil, ranging from 0.03 to 3.78 weight percent, and lead accounts for about 35 percent of the ash produced in such combustion.[2]

Currently, controls are not usually applied to oil fired combustion sources. An exception is utility boilers, especially in the northeastern United States. Pretreatment by vacuum distillation, solvent extraction, settling and/or centrifuging minimizes lead emissions but may make waste oil use uneconomical.[2] High efficiency particulate control by means of properly operated and maintained fabric filters is 99 percent effective for 0.5-1 μm diameter lead and other submicron-sized particulate, but such a degree of control is infrequently used.[2]

Table 1.11-1. WASTE OIL COMBUSTION EMISSION FACTORS
EMISSION FACTOR RATING: B

Pollutant	Emission factor		References
	(kg/m^3)	($lb/10^3$ gal)	
Particulate[a]	9.0 (A)	75 (A)	5
Lead[b]	9.0 (P)	75 (P)	1,2,3

[a]The letter A is for weight % of ash in the waste oil. To calculate the particulate emission factor, multiply the ash in the oil by 9.0 to get kilograms of particulate emitted per m^3 waste oil burned. Example: ash of waste oil is 0.5% the emission factor is 0.5 x 9.0 = 4.5 kg particulate per m^3 waste oil burned.

[b]The letter P indicates that the percent lead in the waste oil being processed should be multiplied by the value given in the table in order to obtain the emission factor. Average P= 1.0% (10,000 ppm). Refer to Reference 5.

References for Section 1.11

1. S. Wyatt, *et al.*, *Preferred Standards Path Analysis on Lead Emissions from Stationary Sources*, Office of Air Quality Planning and Standards, U.S. Environmental Protection Agency, Research Triangle Park, NC, September 1974.

2. S. Chansky, *et al.*, *Waste Automotive Lubricating Oil Reuse as a Fuel*, EPA-600/5-74-032, U.S. Environmental Protection Agency, Washington, DC, September 1974.

3. *Final Report of the API Task Force on Oil Disposal*, American Petroleum Institute, New York, NY, May 1970.

4. *Background Information in Support of the Development of Performance Standards for the Lead Additive Industry*, EPA Contract No. 68-02-2085, PEDCo-Environmental Specialists, Inc., Cincinnati, OH, January 1976

5. *Control Techniques for Lead Air Emissions*, EPA-450/2-77-012, U.S. Environmental Protection Agency, Research Triangle Park, NC, December 1977.

2. SOLID WASTE DISPOSAL

As defined in the Solid Waste Disposal Act of 1965, the term "solid waste" means garbage, refuse, and other discarded solid materials, including solid-waste materials resulting from industrial, commercial, and agricultural operations, and from community activities. It includes both combustibles and noncombustibles.

Solid wastes may be classified into four general categories: urban, industrial, mineral, and agricultural. Although urban wastes represent only a relatively small part of the total solid wastes produced, this category has a large potential for air pollution since in heavily populated areas solid waste is often burned to reduce the bulk of material requiring final disposal [1] The following discussion will be limited to the urban and industrial waste categories.

An average of 5.5 pounds (2.5 kilograms) of urban refuse and garbage is collected per capita per day in the United States.[2] This figure does not include uncollected urban and industrial wastes that are disposed of by other means. Together, uncollected urban and industrial wastes contribute at least 4.5 pounds (2.0 kilograms) per capita per day. The total gives a conservative per capita generation rate of 10 pounds (4.5 kilograms) per day of urban and industrial wastes. Approximately 50 percent of all the urban and industrial waste generated in the United States is burned, using a wide variety of combustion methods with both enclosed and open burning[3]. Atmospheric emissions, both gaseous and particulate, result from refuse disposal operations that use combustion to reduce the quantity of refuse. Emissions from these combustion processes cover a wide range because of their dependence upon the refuse burned, the method of combustion or incineration, and other factors. Because of the large number of variables involved, it is not possible, in general, to delineate when a higher or lower emission factor, or an intermediate value should be used. For this reason, an average emission factor has been presented.

References

1. Solid Waste - It Will Not Go Away. League of Women Voters of the United States. Publication Number 675. April 1971.

2. Black, R.J., H.L. Hickman, Jr., A.J. Klee, A.J. Muchick, and R.D. Vaughan. The National Solid Waste Survey: An Interim Report. Public Health Service, Environmental Control Administration. Rockville, Md. 1968.

3. Nationwide Inventory of Air Pollutant Emissions, 1968. U.S. DHEW, PHS, EHS, National Air Pollution Control Administration. Raleigh, N.C. Publication Number AP-73. August 1970.

2.1 REFUSE INCINERATION

2.1.1 Process Description[1-4]

The most common types of incinerators consist of a refractory-lined chamber with a grate upon which refuse is burned. In some newer incinerators water-walled furnaces are used. Combustion products are formed by heating and burning of refuse on the grate. In most cases, since insufficient underfire (undergrate) air is provided to enable complete combustion, additional over-fire air is admitted above the burning waste to promote complete gas-phase combustion. In multiple-chamber incinerators, gases from the primary chamber flow to a small secondary mixing chamber where more air is admitted, and more complete oxidation occurs. As much as 300 percent excess air may be supplied in order to promote oxidation of combustibles. Auxiliary burners are sometimes installed in the mixing chamber to increase the combustion temperature. Many small-size incinerators are single-chamber units in which gases are vented from the primary combustion chamber directly into the exhaust stack. Single-chamber incinerators of this type do not meet modern air pollution codes.

2.1.2 Definitions of Incinerator Categories[1]

No exact definitions of incinerator size categories exist, but for this report the following general categories and descriptions have been selected:

1. *Municipal incinerators* — Multiple-chamber units often have capacities greater than 50 tons (45.3 MT) per day and are usually equipped with automatic charging mechanisms, temperature controls, and movable grate systems. Municipal incinerators are also usually equipped with some type of particulate control device, such as a spray chamber or electrostatic precipitator.

2. *Industrial/commercial incinerators* — The capacities of these units cover a wide range, generally between 50 and 4,000 pounds (22.7 and 1,800 kilograms) per hour. Of either single- or multiple-chamber design, these units are often manually charged and intermittently operated. Some industrial incinerators are similar to municipal incinerators in size and design. Better designed emission control systems include gas-fired afterburners or scrubbing, or both.

3. *Trench incinerators* — A trench incinerator is designed for the combustion of wastes having relatively high heat content and low ash content. The design of the unit is simple: a U-shaped combustion chamber is formed by the sides and bottom of the pit and air is supplied from nozzles along the top of the pit. The nozzles are directed at an angle below the horizontal to provide a curtain of air across the top of the pit and to provide air for combustion in the pit. The trench incinerator is not as efficient for burning wastes as the municipal multiple-chamber unit, except where careful precautions are taken to use it for disposal of low-ash, high-heat-content refuse, and where special attention is paid to proper operation. Low construction and operating costs have resulted in the use of this incinerator to dispose of materials other than those for which it was originally designed. Emission factors for trench incinerators used to burn three such materials[7] are included in Table 2.1-1.

4. *Domestic incinerators* — This category includes incinerators marketed for residential use. Fairly simple in design, they may have single or multiple chambers and usually are equipped with an auxiliary burner to aid combustion.

5. *Flue-fed incinerators* — These units, commonly found in large apartment houses, are characterized by the charging method of dropping refuse down the incinerator flue and into the combustion chamber. Modified flue-fed incinerators utilize afterburners and draft controls to improve combustion efficiency and reduce emissions.

TABLE 2.1-1. EMISSION FACTORS FOR REFUSE INCINERATORS WITHOUT CONTROLS[a]

EMISSION FACTOR RATING: A

Incinerator type	Particulates		Sulfur Oxides[c]		Carbon monoxide		Organics[d]		Nitrogen oxides[e]		Lead[f]	
	kg/Mg	lb/ton	kg/Mg	lb/ton	kg/Mg	lb/ton	kg/Mg	lb/ton	kg/Mg	lb/ton	kg/Mg	lb/ton
Municipal[g]												
Multiple chamber, uncontrolled	15	30	1.25	2.5	17.5	35	0.75	1.5	1.5	3	0.2	0.4
With settling chamber and water spray system[h]	7	14	1.25	2.5	17.5	35	0.75	1.5	1.5	3	-	-
Industrial/commercial												
Multiple chamber[i]	3.5	7	1.25[j]	2.5[j]	5	10	1.5	3	1.5	3	-	-
Single chamber[k]	7.5	15	1.25[j]	2.5[j]	10	20	7.5	15	1	2	-	-
Trench[l]												
Wood	6.5	13	0.05	0.1[m]	-	-	-	-	2	4	-	-
Rubber tires	69	138	-	-	-	-	-	-	-	-	-	-
Municipal refuse	18.5	37	1.25[j]	2.5[j]	-	-	-	-	-	-	-	-
Controlled air[n]	0.7	1.4	0.75	1.5	Neg	Neg	Neg	Neg	5	10	-	-
Flue-fed single chamber[o]	15	30	0.25	0.5	10	20	7.5	15	1.5	3	-	-
Flue-fed (modified)[p,q]	3	6	0.25	0.5	5	10	1.5	3	5	10	-	-
Domestic single chamber												
Without primary burner[r]	17.5	35	0.25	0.5	150	300	50	100	0.5	1	-	-
With primary burner[s]	3.5	7	0.25	0.5	Neg	Neg	1	2	1	2	-	-
Pathological[t]	4	8	Neg	Neg	Neg	Neg	Neg	Neg	1.5	3	-	-

[a]Emission factors are based on weight per unit weight of refuse charged. Dash indicates no available data.
[b]Average factors given based on EPA procedures for incinerator stack testing.
[c]Expressed as sulfur dioxide.
[d]Expressed as methane.
[e]Expressed as nitrogen dioxide.
[f]References 5, 8-14, 24-28.
[g]References 5, 8-14.
[h]Most municipal incinerators are equipped with at least this much control; see Table 2.1-2 for appropriate efficiencies for other controls.
[i]References 3, 5, 10, 13, 15.
[j]Based on municipal incinerator data.
[k]References 3, 5, 10, 15.
[l]Reference 7.
[m]Based on data for wood combustion in conical burners.
[n]Reference 9.
[o]References 3, 10, 11, 13, 15, 16.
[p]With afterburners and draft controls.
[q]References 3, 11, 15.
[r]References 5, 10.
[s]Reference 5.
[t]Reference 3, 9.

6. *Pathological incinerators* — These are incinerators used to dispose of animal remains and other organic material of high moisture content. Generally, these units are in a size range of 50 to 100 pounds (22.7 to 45.4 kilograms) per hour. Wastes are burned on the hearth in the combustion chamber. The units are equipped with combustion controls and afterburners to ensure good combustion and minimal emissions.

7. *Controlled air incinerators* — These units operate on a controlled combustion principle in which the waste is burned in the absence of sufficient oxygen for complete combustion in the main chamber. This process generates a highly combustible gas mixture that is then burned with excess air in a secondary chamber, resulting in efficient combustion. These units are usually equipped with automatic charging mechanisms and are characterized by the high effluent temperatures reached at the exit of the incinerators.

2.1.3 Emissions and Controls[1]

Operating conditions, refuse composition, and basic incinerator design have a pronounced effect on emissions. The manner in which air is supplied to the combustion chamber or chambers has, among all the parameters, the greatest effect on the quantity of particulate emissions. Air may be introduced from beneath the chamber, from the side, or from the top of the combustion area. As underfire air is increased, and increase in fly-ash emissions occurs. Erratic refuse charging causes a disruption of the combustion bed and a subsequent release of large quantities of particulates. Large quantities of uncombusted particulate matter and carbon monoxide are also emitted for an extended period after charging of batch-fed units because of interruptions in the combustion process. In continuously fed units, furnace particulate emissions are strongly dependent upon grate type. The use of rotary kiln and reciprocating grates results in higher particulate emissions than the use of rocking or traveling grates.[14] Emissions of oxides of sulfur are dependent on the sulfur content of the refuse. Carbon monoxide and unburned hydrocarbon emissions may be significant and are caused by poor combustion resulting from improper incinerator design or operating conditions. Nitrogen oxide emissions increase with an increase in the temperature of the combustion zone, an increase in the residence time in the combustion zone before quenching, and an increase in the excess air rates to the point where dilution cooling overcomes the effect of increased oxygen concentration.[14]

Hydrochloric acid emissions were found to approximate 1.0 lb/ton of feed in early work[14] and 1.8 lb/ton in more recent work.[23] The level can be sharply increased in areas where large quantities of plastics are consumed. Methane levels found in recent work[22] range from 0.04 to 0.4 lb/ton of feed.

Table 2.1-2 lists the relative collection efficiencies of particulate control equipment used for municipal incinerators. This control equipment has little effect on gaseous emissions. Table 2.1-1 summarizes the uncontrolled emission factors for the various types of incinerators previously discussed.

Table 2.1-2. COLLECTION EFFICIENCIES FOR VARIOUS TYPES OF MUNICIPAL INCINERATION PARTICULATE CONTROL SYSTEMS[a]

Type of system	Efficiency, %
Settling chamber	0 to 30
Settling chamber and water spray	30 to 60
Wetted baffles	60
Mechanical collector	30 to 80
Scrubber	80 to 95
Electrostatic precipitator	90 to 96
Fabric filter	97 to 99

[a]References 3, 5, 6, and 17 through 21.

References for Section 2.1

1. Air Pollutant Emission Factors, Final Report, Resources Research, Incorporated, Reston, VA, prepared for National Air Pollution Control Administration, Durham, NC, under Contract Number CPA-2269-119, April 1970.

2. Control Techniques for Carbon Monoxide Emissions from Stationary Sources, U.S. DHEW, PHS, EHS, National Air Pollution Control Administration, Washington, DC, Publication Number AP-65, March 1970.

3. Air Pollution Engineering Manual, U.S. DHEW, PHS, National Center for Air Pollution Control, Cincinnati, OH, Publication Number 999-AP-40, 1967, p. 413-503.

4. J. DeMarco. et al., Incinerator Guidelines 1969, U.S. DHEW, Public Health Service, Cincinnati, OH, SW. 13TS, 1969, p. 176.

5. C. V. Kanter, R. G. Lunche, and A. P. Fururich, Techniques for Testing Air Contaminants from Combustion Sources, J. Air Pol. Control Assoc., 6(4): 191-199, February 1957.

6. W. Jens, and F. R. Rehm, Municipal Incineration and Air Pollution Control, 1966 National Incinerator Conference, American Society of Mechanical Engineers, New York, NY, May 1966.

7. J. O. Burkle, J. A. Dorsey, and B. T. Riley, The Effects of Operating Variables and Refuse Types on Emissions from a Pilot-Scale Trench Incinerator, Proceedings of the 1968 Incinerator Conference, American Society of Mechanical Engineers, New York, NY, May 1968, p. 34-41.

8. J. H. Fernandes, Incinerator Air Pollution Control, Proceedings of 1968 National Incinerator Conference, American Society of Mechanical Engineers, New York, NY, May 1968, p. 111.

9. Unpublished data on incinerator testing. U.S. DHEW, PHS, EHS, National Air Pollution Control Administration, Durham, NC, 1970.

10. J. L. Stear, Municipal Incineration: A Review of Literature, U.S. Environmental Protection Agency, Office of Air Programs, Research Triangle Park, NC, OAP Publication Number AP-79, June 1971.

11. E. R. Kaiser, et al., Modifications to Reduce Emissions from a Flue-fed Incinerator, New York University, College of Engineering, Report Number 552.2, June 1959, p. 40 and 49.

12. Unpublished data on incinerator emissions. U.S. DHEW, PHS, Bureau of Solid Waste Management, Cincinnati, OH, 1969.

13. E. R. Kaiser, Refuse Reduction Processes in Proceedings of Surgeon General's Conference on Solid Waste Management, Public Health Service, Washington, DC, PHS Report Number 1729, July 10-20, 1967.

14. Walter R. Nissen, Systems Study of Air Pollution from Municipal Incineration, Arthur D. Little, Inc. Cambridge, MA, prepared for National Air Pollution Control Administration, Durham, NC, under Contract Number CPA-22-69-23, March 1970.

15. Unpublished source test data on incinerators, Resources Research, Incorporated, Reston, VA, 1966-1969.

16. Communication between Resources Research, Incorporated, Reston, VA, and Maryland State Department of Health, Division of Air Quality Control, Baltimore, MD, 1969.

17. F. R. Rehm, Incinerator Testing and Test Results, J. Air Pol. Control Assoc. 6:199-204, February 1957.

18. R. L. Stenburg, et al., Field Evaluation of Combustion Air Effects on Atmospheric Emissions from Municipal Incinerations, J. Air Pol. Control Assoc. 12:83-89, February 1962.

19. E. E. Smauder, Problems of Municipal Incineration, Proceedings of Air Pollution Control Association, West Coast Section, Los Angeles, CA, March 1957.

20. R. W. Gerstle, Unpublished data: revision of emission factors based on recent stack tests, U.S. DHEW, PHS, National Center for Air Pollution Control, Cincinnati, OH, 1967.

21. A Field Study of Performance of Three Municipal Incinerators, University of California, Berkeley, Technical Bulletin 6:41, November 1957.

22. J. Driscol, et al., Evaluation of Monitoring Methods and Instrumentation for Hydrocarbons and Carbon Monoxide in Stationary Source Emissions, Publication No. EPA-R2-72-106, November 1977.

23. J. A. Jahnke, J. L. Chaney, R. Rollins, and C. R. Fortune, A Research Study of Gaseous Emissions from a Municipal Incinerator, J. Air Pollut. Control Assoc. 27:747-753, August 1977.

24. Control Techniques for Lead Air Emissions, EPA-450/2-77-012, U.S. Environmental Protection Agency, Research Triangle Park, NC, December 1977.

25. W. E. Davis, Emissions Study of Industrial Source of Lead Air Pollutants, 1970, EPA APTD-1543, W. E. Davis and Associates, Leawood, KS, April 1973.

26. Emission Tests Nos. 71-CI-05 and 71-CI-11, Office of Air Quality Planning and Standards, U.S. Environmental Protection Agency, Research Triangle Park, NC, September 1971.

27. K. J. Yost, The Environmental Flow of Cadmium and Other Trace Metals: Progress Report for July 1, 1973 to June 30, 1974, Purdue University, West Lafayette, IN.

28. F. L. Closs, et al., "Metal and Particulate Emissions from Incinerators Burning Sewage Sludge", Proceedings of the 1970 National Incinerator Conference of ASME, 1970.

2.2 AUTOMOBILE BODY INCINERATION

2.2.1 Process Description

Auto incinerators consist of a single primary combustion chamber in which one or several partially stripped cars are burned. (Tires are removed.) Approximately 30 to 40 minutes is required to burn two bodies simultaneously.[2] As many as 50 cars per day can be burned in this batch-type operation, depending on the capacity of the incinerator. Continuous operations in which cars are placed on a conveyor belt and passed through a tunnel-type incinerator have capacities of more than 50 cars per 8-hour day.

2.2.2 Emissions and Controls

Both the degree of combustion as determined by the incinerator design and the amount of combustible material left on the car greatly affect emissions. Temperatures on the order of 1200°F (650°C) are reached during auto body incineration.[2] This relatively low combustion temperature is a result of the large incinerator volume needed to contain the bodies as compared with the small quantity of combustible material. The use of overfire air jets in the primary combustion chamber increases combustion efficiency by providing air and increased turbulence.

In an attempt to reduce the various air pollutants produced by this method of burning, some auto incinerators are equipped with emission control devices. Afterburners and low-voltage electrostatic precipitators have been used to reduce particulate emissions; the former also reduces some of the gaseous emissions.[3,4] When afterburners are used to control emissions, the temperature in the secondary combustion chamber should be at least 1500°F (815°C). Lower temperatures result in higher emissions. Emission factors for auto body incinerators are presented in Table 2.2-1.

Table 2.2-1. EMISSION FACTORS FOR AUTO BODY INCINERATION[a]
EMISSION FACTOR RATING: B

Pollutants	Uncontrolled		With afterburner	
	lb/car	kg/car	lb/car	kg/car
Particulates[b]	2	0.9	1.5	0.68
Carbon monoxide[c]	2.5	1.1	Neg	Neg
Hydrocarbons (CH_4)[c]	0.5	0.23	Neg	Neg
Nitrogen oxides (NO_2)[d]	0.1	0.05	0.02	0.01
Aldehydes (HCOH)[d]	0.2	0.09	0.06	0.03
Organic acids (acetic)[d]	0.21	0.10	0.07	0.03

[a]Based on 250 lb (113 kg) of combustible material on stripped car body.
[b]References 2 and 4.
[c]Based on data for open burning and References 2 and 5.
[d]Reference 3.

References for Section 2.2

1. Air Pollutant Emission Factors. Final Report. Resources Research Inc. Reston, Va. Prepared for National Air Pollution Control Administration, Durham, N.C., under Contract Number CPA-22-69-119. April 1970.

2. Kaiser, E.R. and J. Tolcias. Smokeless Burning of Automobile Bodies. J. Air Pol. Control Assoc. *12*:64-73, February 1962.

3. Alpiser, F.M. Air Pollution from Disposal of Junked Autos. Air Engineering. *10*:18-22, November 1968.

4. Private communication with D.F. Walters, U.S. DHEW, PHS, Division of Air Pollution. Cincinnati, Ohio. July 19, 1963.

5. Gerstle, R.W. and D.A. Kemnitz. Atmospheric Emissions from Open Burning. J. Air Pol. Control Assoc. *17*:324-327. May 1967.

2.3 CONICAL BURNERS

2.3.1 Process Description[1]

Conical burners are generally a truncated metal cone with a screened top vent. The charge is placed on a raised grate by either conveyor or bulldozer; however, the use of a conveyor results in more efficient burning. No supplemental fuel is used, but combustion air is often supplemented by underfire air blown into the chamber below the grate and by overfire air introduced through peripheral openings in the shell.

2.3.2 Emissions and Controls

The quantities and types of pollutants released from conical burners are dependent on the composition and moisture content of the charged material, control of combustion air, type of charging system used, and the condition in which the incinerator is maintained. The most critical of these factors seems to be the level of maintenance on the incinerators. It is not uncommon for conical burners to have missing doors and numerous holes in the shell, resulting in excessive combustion air, low temperatures, and, therefore, high emission rates of combustible pollutants.[2]

Particulate control systems have been adapted to conical burners with some success. These control systems include water curtains (wet caps) and water scrubbers. Emission factors for conical burners are shown in Table 2.3-1.

Table 2.3-1. EMISSION FACTORS FOR WASTE INCINERATION IN CONICAL BURNERS WITHOUT CONTROLS[a]
EMISSION FACTOR RATING: B

Type of waste	Particulates		Sulfur oxides		Carbon monoxide		Hydrocarbons		Nitrogen oxides	
	lb/ton	kg/MT	lb/ton	kg/MT	lb/ton	kg/MT	lb/ton	kg/MT	lb/ton	kg/MT
Municipal refuse[b]	20(10 to 60)[c,d]	10	2	1	60	30	20	10	5	2.5
Wood refuse[e]	1[f]	0.5	0.1	0.05	130	65	11	5.5	1	0.5
	7[g]	3.5								
	20[h]	10								

[a]Moisture content as fired is approximately 50 percent for wood waste.
[b]Except for particulates, factors are based on comparison with other waste disposal practices.
[c]Use high side of range for intermittent operations charged with a bulldozer.
[d]Based on Reference 3.
[e]References 4 through 9.
[f]Satisfactory operation: properly maintained burner with adjustable underfire air supply and adjustable, tangential overfire air inlets, approximately 500 percent excess air and 700°F (370°C) exit gas temperature.
[g]Unsatisfactory operation: properly maintained burner with radial overfire air supply near bottom of shell, approximately 1200 percent excess air and 400°F (204°C) exit gas temperature.
[h]Very unsatisfactory operation: improperly maintained burner with radial overfire air supply near bottom of shell and many gaping holes in shell, approximately 1500 percent excess air and 400°F (204°C) exit gas temperature.

References for Section 2.3

1. Air Pollutant Emission Factors. Final Report. Resources Research Inc. Reston, Va. Prepared for National Air Pollution Control Administration, Durham, N.C., under Contract Number CPA-22-69-119. April 1970.

2. Kreichelt, T.E. Air Pollution Aspects of Teepee Burners. U.S. DHEW, PHS, Division of Air Pollution. Cincinnati, Ohio. PHS Publication Number 999-AP-28. September 1966.

3. Magill, P.L. and R.W. Benoliel. Air Pollution in Los Angeles County: Contribution of Industrial Products. Ind. Eng. Chem. *44*:1347-1352, June 1952.

4. Private communication with Public Health Service, Bureau of Solid Waste Management, Cincinnati, Ohio. October 31, 1969.

5. Anderson, D.M., J. Lieben, and V.H. Sussman. Pure Air for Pennsylvania. Pennsylvania State Department of Health, Harrisburg. November 1961. p.98.

6. Boubel, R.W. et al. Wood Waste Disposal and Utilization. Engineering Experiment Station, Oregon State University, Corvallis. Bulletin Number 39. June 1958. p.57.

7. Netzley, A.B. and J.E. Williamson. Multiple Chamber Incinerators for Burning Wood Waste. In: Air Pollution Engineering Manual, Danielson, J.A. (ed.). U.S. DHEW, PHS, National Center for Air Pollution Control. Cincinnati, Ohio. PHS Publication Number 999-AP-40. 1967. p.436-445.

8. Droege, H. and G. Lee. The Use of Gas Sampling and Analysis for the Evaluation of Teepee Burners. Bureau of Air Sanitation, California Department of Public Health. (Presented at the 7th Conference on Methods in Air Pollution Studies, Los Angeles. January 1965.)

9. Boubel R.W. Particulate Emissions from Sawmill Waste Burners. Engineering Experiment Station, Oregon State University, Corvallis. Bulletin Number 42. August 1968. p.7,8.

2.4 OPEN BURNING

2.4.1 General[1]

Open burning can be done in open drums or baskets, in fields and yards, and in large open dumps or pits. Materials commonly disposed of in this manner are municipal waste, auto body components, landscape refuse, agricultural field refuse, wood refuse, bulky industrial refuse, and leaves.

2.4.2 Emissions[1-19]

Ground-level open burning is affected by many variables including wind, ambient temperature, composition and moisture content of the debris burned, and compactness of the pile. In general, the relatively low temperatures associated with open burning increase the emission of particulates, carbon monoxide, and hydrocarbons and suppress the emission of nitrogen oxides. Sulfur oxide emissions are a direct function of the sulfur content of the refuse. Emission factors are presented in Table 2.4-1 for the open burning of municipal refuse and automobile components.

Table 2.4-1. EMISSION FACTORS FOR OPEN BURNING OF NONAGRICULTURAL MATERIAL
EMISSION FACTOR RATING: B

Source	Particulate	Sulfur oxides	Carbon monoxide	VOC[a] methane	VOC[a] nonmethane	Nitrogen oxides
Municipal refuse[b]						
kg/Mg	8	0.5	42	6.5	15	3
lb/ton	16	1	85	13	30	6
Automobile components[c]						
kg/Mg	50	Neg.	62	5	16	2
lb/ton	100	Neg.	125	10	32	4

[a]Data indicate that VOC emissions are approximately 25% methane, 8% other saturates, 18% olefins, 42% others (oxygenates, acetylene, aromatics, trace formaldehyde).
[b]References 2, 7.
[c]References 2. Upholstery, belts, hoses and tires burned together.

Emissions from agricultural refuse burning are dependent mainly on the moisture content of the refuse and, in the case of the field crops, on whether the refuse is burned in a headfire or a backfire. (Headfires are started at the upwind side of a field and allowed to progress in the direction of the wind, whereas backfires are started at the downwind edge and forced to progress in a direction opposing the wind.) Other variables such as fuel loading (how much refuse material is burned per unit of land area) and how the refuse is arranged (that is, in piles, rows, or spread out) are also important in certain instances. Emission factors for open agricultural burning are presented in Table 2.4-2 as a function of refuse type and also, in certain instances, as a function of burning techniques and/or moisture content when these variables are known to significantly affect emissions. Table 2.4-2 also presents typical fuel loading values associated with each type of refuse. These values can be used, along with the corresponding emission factors, to estimate emissions from certain categories of agricultural burning when the specific fuel loadings for a given area are not known.

Emissions from leaf burning are dependent upon the moisture content, density, and ignition location of the leaf piles. Increasing the moisture content of the leaves generally increases the amount of carbon monoxide,

Table 2.4-2. EMISSION FACTORS AND FUEL LOADING FACTORS FOR OPEN BURNING OF AGRICULTURAL MATERIALS[a]
EMISSION FACTOR RATING: B

Refuse Category	Particulate[b]		Carbon Monoxide		VOC[c] Methane		VOC[c] Nonmethane		Fuel Loading Factors (waste production)	
	kg/Mg	lb/ton	kg/Mg	lb/ton	kg/Mg	lb/ton	kg/Mg	lb/ton	Mg/hectare	ton/acre
Field Crops[d]										
Unspecified	11	21	58	117	2.7	5.4	9	18	4.5	2
Burning techniques not significant[e]										
Asparagus[f]	20	40	75	150	10	20	33	66	3.4	1.5
Barley	11	22	78	157	2.2	4.5	7.5	15	3.8	1.7
Corn	7	14	54	108	2	4	6	12	9.4	4.2
Cotton	4	8	88	176	0.7	1.4	2.5	5	3.8	1.7
Grasses	8	16	50	101	2.2	4.5	7.5	15		
Pineapple[g]	4	8	56	112	1	2	3	6		
Rice[h]	4	9	41	83	1.2	2.4	4	8	6.7	3.0
Safflower	9	18	72	144	3	6	10	20	2.9	1.3
Sorghum	9	18	38	77	1	2	3.5	7	6.5	2.9
Sugar cane[i]	2.5-3.5	6-8.4	30-41	60-81	0.6-2	1.2-3.8	2-6	4-12	8-46	3-17
Headfire burning[j]										
Alfalfa	23	45	53	106	4.2	8.5	14	28	1.8	0.8
Bean (red)	22	43	93	186	5.5	11	18	36	5.6	2.5
Hay (wild)	16	32	70	139	2.5	5	8.5	17	2.2	1.0
Oats	22	44	68	137	4	7.8	13	26	3.6	1.6
Pea	16	31	74	147	4.5	9	15	29	5.6	2.5
Wheat	11	22	64	128	2	4	6.5	13	4.3	1.9
Backfire burning[k]										
Alfalfa	14	29	60	119	4.5	9	14	29	1.8	0.8
Bean (red), pea	7	14	72	148	3	6	10	19	5.6	2.5
Hay (wild)	8	17	75	150	2	4	6.5	13	2.2	1.0
Oats	11	21	68	136	2	4	7	14	3.6	1.6
Wheat	6	13	54	108	1.3	2.6	4.5	9	4.3	1.9
Vine Crops	3	5	26	51	0.8	1.7	3	5	5.6	2.5
Weeds										
Unspecified	8	15	42	85	1.5	3	4.5	9	7.2	3.2
Russian thistle (tumbleweed)	11	22	154	309	0.2	0.5	0.8	1.5	0.2	0.1
Tules (wild reeds)	3	5	17	34	3.2	6.5	10	21		

Orchard Crops[d,l,m]										
Unspecified	3	6	26	52	1.2	2.5	4	8	3.6	1.6
Almond	3	6	23	46	1	2	3	6	3.6	1.6
Apple	2	4	21	42	0.5	1	1.5	3	5.2	2.3
Apricot	3	6	24	49	1	2	3	6	4	1.8
Avocado	10	21	58	116	3.8	7.5	12	25	3.4	1.5
Cherry	4	8	22	44	1.2	2.5	4	8	2.2	1.0
Citrus (orange, lemon)	3	6	40	81	1.5	3	5	9	2.2	1.0
Date palm	5	10	28	56	0.8	1.7	3	5	2.2	1.0
Fig	4	7	28	57	1.2	2.5	4	8	4.9	2.2
Nectarine	2	4	16	33	0.5	1	1.5	3	4.5	2.0
Olive	6	12	57	114	2	4	7	14	2.7	1.2
Peach	3	6	21	42	0.6	1.2	2	4	5.6	2.5
Pear	4	9	28	57	1	2	3.5	7	5.8	2.6
Prune	2	3	21	42	0.4	0.7	1	2	2.7	1.2
Walnut	3	6	24	47	1	2	3	6	2.7	1.2
Forest Residues[n]										
Unspecified	8	17	70	140	2.8	5.7	9	19	157	70
Hemlock, Douglas fir, cedar[p]	2	4	45	90	0.6	1.2	2	4		
Ponderosa pine[q]	6	12	98	195	1.7	3.3	5.5	11		

[a]Expressed as weight of pollutant emitted/weight of refuse material burned.
[b]Reference 12. Particulate matter from most agricultural refuse burning has been found to be in the submicrometer size range.
[c]Data indicate that VOC emissions average 22% methane, 7.5% other saturates, 17% olefins, 15% acetylene, 38.5% unidentified. Unidentified VOC are expected to include aldehydes, ketones, aromatics, cycloparaffins.
[d]References 12-13 for emission factors, Reference 14 for fuel loading factors.
[e]For these refuse materials, no significant difference exists between emissions from headfiring or backfiring.
[f]Factors represent emissions under typical high moisture conditions. If ferns are dried to <15% moisture, particulate emissions will be reduced by 30%, CO emissions 23%, VOC 74%.
[g]Reference 11. When pineapple is allowed to dry to <20% moisture, as it usually is, firing technique is not important. When headfired at 20% moisture, particulate emissions will increase to 11.5 kg/Mg (23 lb/ton) and VOC will increase to 6.5 kg/Mg (13 lb/ton).
[h]Factors are for dry (15% moisture) rice straw. If rice straw is burned at higher moisture levels, particulate emissions will increase to 14.5 kg/Mg (29 lb/ton), CO emissions to 80.5 kg/Mg (181 lb/ton), and VOC emissions to 11.5 kg/Mg (23 lb/ton).
[i]Reference 20. See Section 8.12 for discussion of sugar cane burning. The following fuel loading factors are to be used in the corresponding states: Louisiana, 8 - 13.6 Mg/hectare (3 - 5 ton/acre); Florida, 11 - 19 Mg/hectare (4 - 7 ton/acre); Hawaii, 30 - 48 Mg/hectare (11 - 17 ton/acre). For other areas, values generally increase with length of growing season. Use the larger end of the emission factor range for lower loading factors.
[j]See text for definition of headfiring.
[k]See text for definition of backfiring. This category, for emission estimation purposes, includes another technique used occasionally to limit emissions, called into-the-wind striplighting, which is lighting fields in strips into the wind at 100 - 200 m (300 - 600 ft) intervals.
[l]Orchard prunings are usually burned in piles. There are no significant differences in emissions between burning a "cold pile" and using a roll-on technique, where prunings are bulldozed onto the embers of a preceding fire.
[m]If orchard removal is the purpose of a burn, 66 Mg/hectare (30 ton/acre) of waste will be produced.
[n]Reference 10. NO_x emissions estimated at 2 kg/Mg (4 lb/ton).
[p]Reference 15.
[q]Reference 16.

hydrocarbon, and particulate emissions. Increasing the density of the piles increases the amount of hydrocarbon and particulate emissions, but has a variable effect on carbon monoxide emissions. Arranging the leaves in conical piles and igniting around the periphery of the bottom proves to the least desirable method of burning. Igniting a single spot on the top of the pile decreases the hydrocarbon and particulate emissions. Carbon monoxide emissions with top ignition decreases if moisture content is high but increases if moisture content is low. Particulate, hydrocarbon, and carbon monoxide emissions from windrow ignition (piling the leaves into a long row and igniting one end, allowing it to burn toward the other end) are intermediate between top and bottom ignition. Emission factors for leaf burning are presented in Table 2.4-3.

For more detailed information on this subject, the reader should consult the references cited at the end of this section.

Table 2.4-3. EMISSION FACTORS FOR LEAF BURNING[18,19]
EMISSION FACTOR RATING: B

	Particulate[b]		Carbon monoxide		VOC[c]			
					Methane		Nonmethane	
Leaf Species	kg/Mg	lb/ton	kg/Mg	lb/ton	kg/Mg	lb/ton	kg/Mg	lb/ton
Black Ash	18	36	63.5	127	5.5	11	13.5	27
Modesto Ash	16	32	81.5	163	5	10	12	24
White Ash	21.5	43	57	113	6.5	13	16	32
Catalpa	8.5	17	44.5	89	2.5	5	6.5	13
Horse Chestnut	27	54	73.5	147	8	17	20	40
Cottonwood	19	38	45	90	6	12	14	28
American Elm	13	26	59.5	119	4	8	9.5	19
Eucalyptus	18	36	45	90	5.5	11	13.5	27
Sweet Gum	16.5	33	70	140	5	10	12.5	25
Black Locust	35	70	65	130	11	22	26	52
Magnolia	6.5	13	27.5	55	2	4	5	10
Silver Maple	33	66	51	102	10	20	24.5	49
American Sycamore	7.5	15	57.5	115	2.5	5	5.5	11
California Sycamore	5	10	52	104	1.5	3	3.5	7
Tulip	10	20	38.5	77	3	6	7.5	15
Red Oak	46	92	68.5	137	14	28	34	69
Sugar Maple	26.5	53	54	108	8	16	20	40
Unspecified	19	38	56	112	6	12	14	28

[a]References 18-19. Factors are an arithmetic average of results obtained by burning high and low moisture content conical piles, ignited either at the top or around the periphery of the bottom. The windrow arrangement was only tested on Modesto Ash, Catalpa, American Elm, Sweet Gum, Silver Maple and Tulip, and results are included in the averages for these species.
[b]The majority of particulate is submicron in size.
[c]Tests indicate that VOC emissions average 29% methane, 11% other saturates, 33% olefins, 27% other (aromatics, acetylene, oxygenates).

References for Section 2.4

1. Air Pollutant Emission Factors. Final Report. Resources Research, Inc., Reston, Va. Prepared for National Air Pollution Control Administration, Durham, N.C. under Contract Number CPA-22-69-119. April 1970.

2. Gerstle, R. W. and D. A. Kemnitz. Atmospheric Emissions from Open Burning. J. Air Pol. Control Assoc. *12*:324-327. May 1967.

3. Burkle, J. O., J.A. Dorsey, and B. T. Riley. The Effects of Operating Variables and Refuse Types on Emissions from a Pilot-Scale Trench Incinerator. In: Proceedings of 1968 Incinerator Conference, American Society of Mechanical Engineers. New York. May 1968. p. 34-41.

4. Weisburd, M. I. and S. S. Griswold (eds.). Air Pollution Control Field Operations Guide: A Guide for Inspection and Control. U.S. DHEW, PHS, Division of Air Pollution, Washington, D.C.,PHS Publication No. 937. 1962.

5. Unpublished data on estimated major air contaminant emissions. State of New York Department of Health. Albany. April 1, 1968.

6. Darley, E. F. et al. Contribution of Burning of Agricultural Wastes to Photochemical Air Pollution J. Air Pol. Control Assoc. *16*:685-690, December 1966.

7. Feldstein, M. et al. The Contribution of the Open Burning of Land Clearing Debris to Air Pollution. J. Air Pol. Control Assoc. *13*:542-545, November 1963.

8. Boubel, R. W., E. F. Darley, and E. A. Schuck. Emissions from Burning Grass Stubble and Straw. J. Air Pol. Control Assoc. *19*:497-500, July 1969.

9. Waste Problems of Agriculture and Forestry. Environ. Sci. and Tech. *2*:498, July 1968.

10. Yamate, G. et al. An Inventory of Emissions from Forest Wildfires, Forest Managed Burns, and Agricultural Burns and Development of Emission Factors for Estimating Atmospheric Emissions from Forest Fires. (Presented at 68th Annual Meeting Air Pollution Control Association. Boston. June 1975.)

11. Darley, E. F. Air Pollution Emissions from Burning Sugar Cane and Pineapple from Hawaii. University of California, Riverside, Calif. Prepared for Environmental Protection Agency, Research Triangle Park, N. C. as amendment to Research Grant No. R800711. August 1974.

12. Darley, E. F. et al. Air Pollution from Forest and Agricultural Burning. California Air Resources Board Project 2-017-1, University of California. Davis, Calif. California Air Resources Board Project No. 2-017-1. April 1974.

13. Darley, E. F. Progress Report on Emissions from Agricultural Burning. California Air Resources Board Project 4-011. University of California, Riverside, Calif. Private communication with permission of Air Resources Board, June 1975.

14. Private communication on estimated waste production from agricultural burning activities. California Air Resources Board, Sacramento, Calif. September 1975.

15. Fritschen, L. et al. Flash Fire Atmospheric Pollution. U.S. Department of Agriculture, Washington, D.C. Service Research Paper PNW-97. 1970.

16. Sandberg, D. V., S. G. Pickford, and E. F. Darley. Emissions from Slash Burning and the Influence of Flame Retardant Chemicals. J. Air Pol. Control Assoc. *25*:278, 1975.

17. Wayne, L. G. and M. L. McQueary. Calculation of Emission Factors for Agricultural Burning Activities. Pacific Environmental Services, Inc., Santa Monica, Calif. Prepared for Environmental Protection Agency, Research Triangle Park, N. C., und. Contract No. 68-02-1004, Task Order No. 4. Publication No. EPA-450/3-75-087. November 1975.

18. Darley, E.F. Emission Factor Development for Leaf Burning. University of California, Riverside, Calif. Prepared for Environmental Protection Agency, Research Triangle Park, N.C., under Purchase Order No. 5-02-6876-1. September 1976.

19. Darley, E.F. Evaluation of the Impact of Leaf Burning - Phase I: Emission Factors for Illinois Leaves. University of California, Riverside, Calif. Prepared for State of Illinois, Institute for Environmental Quality. August 1975.

20. Southerland, J.H. and A. McBath. Emission Factors and Field Loading for Sugar Cane Burning. MDAD, OAQPS, U.S. Environmental Protection Agency, Research Triangle Park, N.C. January 1978.

2.5 SEWAGE SLUDGE INCINERATION

2.5.1 Process Description [1-3]

Incineration is becoming an important means of disposal for the increasing amounts of sludge being produced in sewage treatment plants. Incineration has the advantages of both destroying the organic matter present in sludge, leaving only an odorless, sterile ash, as well as reducing the solid mass by about 90 percent. Disadvantages include the remaining, but reduced, waste disposal problem and the potential for air pollution. Sludge incineration systems usually include a sludge pretreatment stage to thicken and dewater the incoming sludge, an incinerator, and some type of air pollution control equipment (commonly wet scrubbers).

The most prevalent types of incinerators are multiple hearth and fluidized bed units. In multiple hearth units the sludge enters the top of the furnace where it is first dried by contact with the hot, rising, combustion gases, and then burned as it moves slowly down through the lower hearths. At the bottom hearth any residual ash is then removed. In fluidized bed reactors, the combustion takes place in a hot, suspended bed of sand with much of the ash residue being swept out with the flue gas. Temperatures in a multiple hearth furnace are 600°F (320°C) in the lower, ash cooling hearth; 1400 to 2000°F (760 to 1100°C) in the central combustion hearths, and 1000 to 1200°F (540 to 650°C) in the upper, drying hearths. Temperatures in a fluidized bed reactor are fairly uniform, from 1250 to 1500°F (680 to 820°C). In both types of furnace an auxiliary fuel may be required either during startup or when the moisture content of the sludge is too high to support combustion.

2.5.2 Emissions and Controls [1,2,4-7]

Because of the violent upwards movement of combustion gases with respect to the burning sludge, particulates are the major emissions problem in both multiple hearth and fluidized bed incinerators. Wet scrubbers are commonly employed for particulate control and can achieve efficiencies ranging from 95 to 99+ percent.

Although dry sludge may contain from 1 to 2 percent sulfur by weight, sulfur oxides are not emitted in significant amounts when sludge burning is compared with many other combustion processes. Similarly, nitrogen oxides, because temperatures during incineration do not exceed 1500°F (820°C) in fluidized bed reactors or 1600 to 2000°F (870 to 1100°C) in multiple hearth units, are not formed in great amounts.

Odors can be a problem in multiple hearth systems as unburned volatiles are given off in the upper, drying hearths, but are readily removed when afterburners are employed. Odors are not generally a problem in fluidized bed units as temperatures are uniformly high enough to provide complete oxidation of the volatile compounds. Odors can also emanate from the pretreatment stages unless the operations are properly enclosed.

Emission factors for sludge incinerators are shown in Table 2.5-1. It should be noted that most sludge incinerators operating today employ some type of scrubber.

TABLE 2.5-1. EMISSION FACTORS FOR SEWAGE SLUDGE INCINERATORS[a]

EMISSION FACTOR RATING: B

Pollutant	Uncontrolled[b]		After scrubber			
			Multiple hearth		Fluidized bed	
	kg/Mg	lb/ton	kg/Mg	lb/ton	kg/Mg	lb/ton
Particulate[c]	50	100	1.5	3	1.5	3
Sulfur dioxide[d]	0.5	1	0.4	0.8	0.4	0.8
Carbon monoxide[e]	Neg	Neg	Neg	Neg	Neg	Neg
Nitrogen oxides[d] (as NO_2)	3	6	2.5	5	2.5	5
Hydrocarbons[d]	0.75	1.5	0.5	1	0.5	1
Hydrogen chloride gas	0.75	1.5	0.15	0.3	0.15	0.3
Lead[f]	-	-	0.015 (0.01-0.2)	0.025 (0.02-0.03)	0.001 (0.005-0.002)	0.002 (0.001-0.003)

[a]Emission factors expressed as weight per unit weight of dried sludge. Dash indicates no data available.
[b]Estimated from emission factors after scrubbers.
[c]References 6-9.
[d]Reference 8.
[e]References 6, 8.
[f]References 10-11.

References for Section 2.5

1. R. R. Calaceto, Advances in Fly Ash Removal with Gas-Scrubbing Devices, Filtration Engineering, 1(7):12-15, March 1970.

2. S. Balakrishnam, et al., State of the Art Review on Sludge Incineration Practices, U.S. Department of the Interior, Federal Water Quality Administration, Washington, DC, FWQA-WPC Research Series.

3. Canada's Largest Sludge Incinerators Fired Up and Running, Water and Pollution Control, 107(1):20-21, 24, January 1969.

4. R. R. Calaceto, Sludge Incinerator Fly Ash Controlled by Cyclonic Scrubber, Public Works, 94(2):113-114, February 1963.

5. I. M. Schuraytz, et al., Stainless Steel Use in Sludge Incinerator Gas Scrubbers, Public Works 103(2):55-57, February 1972.

6. P. Liao, Design Method for Fluidized Bed Sewage Sludge Incinerators, PhD. Thesis, University of Washington, Seattle, WA, 1972.

7. Source test data supplied by the Detroit Metropolitan Water Department, Detroit, MI, 1973.

8. Source test data from Office of Air Quality Planning and Standards, U.S. Environmental Protection Agency, Research Triangle Park, NC, 1972.

9. Source test data from Dorr-Oliver, Inc., Stamford, CT, 1973.

10. W. E. Davis, Emissions Study of Industrial Sources of Lead Air Pollutants, 1970, EPA APTD-1543, W. E. Davis and Associates, Leawood, KS, April 1973. 1973.

11. Sewage Sludge Incineration, EPA-R2-72-040, U.S. Environmental Protection Agency, Research Triangle Park, NC, August 1972.

3.0 STATIONARY INTERNAL COMBUSTION SOURCES

Internal combustion engines included in this category generally are used in applications similar to those associated with external combustion sources. The major engines within this category are gas turbines and large heavy duty general utility reciprocating engines. Most stationary internal combustion engines are used to generate electric power, to pump gas or other fluids, or to compress air for pneumatic machinery.

3.1 Stationary Gas Turbines for Electric Utility Power Plants

3.1.1 General – Stationary gas turbines find application in electric power generators, in gas pipeline pump and compressor drives, and in various process industries. The majority of these engines are used in electrical generation for continuous, peaking, or standby power.[1] The primary fuels used are natural gas and No. 2 (distillate) fuel oil, although residual oil is used in a few applications.

3.1.2 Emissions – Data on gas turbines were gathered and summarized under an EPA contract.[2] The contractor found that several investigators had reported data on emissions from gas turbines used in electrical generation but that little agreement existed among the investigators regarding the terms in which the emissions were expressed. The efforts represented by this section include acquisition of the data and their conversion to uniform terms. Because many sets of measurements reported by the contractor were not complete, this conversion often involved assumptions on engine air flow or fuel flow rates (based on manufacturers' data). Another shortcoming of the available information was that relatively few data were obtained at loads below maximum rated (or base) load.

Available data on the population and usage of gas turbines in electric utility power plants are fairly extensive, and information from the various sources appears to be in substantial agreement. The source providing the most complete information is the Federal Power Commission, which requires major utilities (electric revenues of $1 million or more) to submit operating and financial data on an annual basis. Sawyer and Farmer[3] employed these data to develop statistics on the use of gas turbines for electric generation in 1971. Although their report involved only the major, publicly owned utilities (not the private or investor-owned companies), the statistics do appear to include about 87 percent of the gas turbine power used for electric generation in 1971.

Of the 253 generating stations listed by Sawyer and Farmer, 137 have more than one turbine-generator unit. From the available data, it is not possible to know how many hours *each* turbine was operated during 1971 for these multiple-turbine plants. The remaining 116 (single-turbine) units, however, were operated an average of 1196 hours during 1971 (or 13.7 percent of the time), and their average load factor (percent of rated load) during operation was 86.8 percent. This information alone is not adequate for determining a representative operating pattern for electric utility turbines, but it should help prevent serious errors.

Using 1196 hours of operation per year and 250 starts per year as normal, the resulting average operating day is about 4.8 hours long. One hour of no-load time per day would represent about 21 percent of operating time, which is considered somewhat excessive. For economy considerations, turbines are not run at off-design conditions any longer than necessary, so time spent at intermediate power points is probably minimal. The bulk of turbine operation must be at base or peak load to achieve the high load factor already mentioned.

If it is assumed that time spent at off-design conditions includes 15 percent at zero load and 2 percent each at 25 percent, 50 percent, and 75 percent load, then the percentages of operating time at rated load (100 percent) and peak load (assumed to be 125 percent of rated) can be calculated to produce an 86.8 percent load factor. These percentages turn out to be 19 percent at peak load and 60 percent at rated load; the postulated cycle based on this line of reasoning is summarized in Table 3.1-1.

Table 3.1-1. TYPICAL OPERATING CYCLE FOR ELECTRIC UTILITY TURBINES

Condition, % of rated power	Percent operating time spent at condition	Time at condition based on 4.8-hr day		Contribution to load factor at condition
		hours	minutes	
0	15	0.72	43	0.00 x 0.15 = 0.0
25	2	0.10	6	0.25 x 0.02 = 0.005
50	2	0.10	6	0.50 x 0.02 = 0.010
75	2	0.10	6	0.75 x 0.02 = 0.015
100 (base)	60	2.88	173	1.0 x 0.60 = 0.60
125 (peak)	19	0.91	55	1.25 x 0.19 = 0.238
		4.81	289	Load factor = 0.868

The operating cycle in Table 3.1-1 is used to compute emission factors, although it is only an estimate of actual operating patterns.

Table 3.1-2. COMPOSITE EMISSION FACTORS FOR 1971 POPULATION OF ELECTRIC UTILITY TURBINES
EMISSION FACTOR RATING: B

Time basis	Nitrogen oxides	Hydro-carbons	Carbon Monoxide	Partic-ulate	Sulfur oxides
Entire population					
lb/hr rated load[a]	8.84	0.79	2.18	0.52	0.33
kg/hr rated load	4.01	0.36	0.99	0.24	0.15
Gas-fired only					
lb/hr rated load	7.81	0.79	2.18	0.27	0.098
kg/hr rated load	3.54	0.36	0.99	0.12	0.044
Oil-fired only					
lb/hr rated load	9.60	0.79	2.18	0.71	0.50
kg/hr rated load	4.35	0.36	0.99	0.32	0.23
Fuel basis					
Gas-fired only					
lb/10^6 ft^3 gas	413.	42.	115.	14.	940S[b]
kg/10^6 m^3 gas	6615.	673.	1842.	224.	15,000S
Oil-fired only					
lb/10^3 gal oil	67.8	5.57	15.4	5.0	140S
kg/10^3 liter oil	8.13	0.668	1.85	0.60	16.8S

[a]Rated load expressed in megawatts.

[b]S is the percentage sulfur. Example: If the factor is 940 and the sulfur content is 0.01 percent, the sulfur oxides emitted would be 940 times 0.01, or 9.4 lb/10^6 ft^3 gas.

Table 3.1-2 is the resultant composite emission factors based on the operating cycle of Table 3.1-1 and the 1971 population of electric utility turbines.

Different values for time at base and peak loads are obtained by changing the total time at lower loads (0 through 75 percent) or by changing the distribution of time spent at lower loads. The cycle given in Table 3.1-1 seems reasonable, however, considering the fixed load factor and the economies of turbine operation. Note that the cycle determines *only* the importance of each load condition in computing composite emission factors for each type of turbine, *not* overall operating hours.

The top portion of Table 3.1-2 gives separate factors for gas-fired and oil-fired units, and the bottom portion gives fuel-based factors that can be used to estimate emission rates when overall fuel consumption data are available. Fuel-based emission factors on a mode basis would also be useful but present fuel consumption data are not adequate for this purpose.

References for Section 3.1

1. O'Keefe, W. and R. G. Schwieger. Prime Movers. Power. *115*(11): 522-531. November 1971.

2. Hare, C. T. and K. J. Springer. Exhaust Emissions from Uncontrolled Vehicles and Related Equipment Using Internal Combustion Engines. Final Report. Part 6: Gas Turbine Electric Utility Power Plants. Southwest Research Institute, San Antonio, Tex. Prepared for Environmental Protection Agency, Research Triangle Park, N.C., under Contract No. EHS 70-108, February 1974.

3. Sawyer, V. W. and R. C. Farmer. Gas Turbines in U.S. Electric Utilities. Gas Turbine International. January – April 1973.

3.2 Heavy Duty Natural Gas Fired Pipeline Compressor Engines

3.2.1 General[1] – Engines in the natural gas industry are used primarily to power compressors used for pipeline transportation, field gathering (collecting gas from wells), underground storage, and gas processing plant applications. Pipeline engines are concentrated in the major gas producing states (such as those along the Gulf Coast) and along the major gas pipelines. Both reciprocating engines and gas turbines are utilized, but the trend has been toward use of large gas turbines. Gas turbines emit considerably fewer pollutants than do reciprocating engines; however, reciprocating engines are generally more efficient in their use of fuel.

3.2.2 Emissions and Controls[1,2] – The primary pollutant of concern is NO_x, which readily forms in the high temperature, pressure, and excess air environment found in natural gas fired compressor engines. Lesser amounts of carbon monoxide and hydrocarbons are emitted, although for each unit of natural gas burned, compressor engines (particularly reciprocating engines) emit significantly more of these pollutants than do external combustion boilers. Sulfur oxides emissions are proportional to the sulfur content of the fuel and will usually be quite low because of the negligible sulfur content of most pipeline gas.

The major variables affecting NO_x emissions from compressor engines include the air fuel ratio, engine load (defined as the ratio of the operating horsepower divided by the rated horsepower), intake (manifold) air temperature, and absolute humidity. In general, NO_x emissions increase with increasing load and intake air temperature and decrease with increasing absolute humidity and air fuel ratio. (The latter already being, in most compressor engines, on the "lean" side of that air fuel ratio at which maximum NO_x formation occurs.) Quantitative estimates of the effects of these variables are presented in Reference 2.

Because NO_x is the primary pollutant of significance emitted from pipeline compressor engines, control measures to date have been directed mainly at limiting NO_x emissions. For gas turbines, the most effective method of controlling NO_x emissions is the injection of water into the combustion chamber. Nitrogen oxides reductions as high as 80 percent can be achieved by this method. Moreover, water injection results in only nominal reductions in overall turbine efficiency. Steam injection can also be employed, but the resulting NO_x reductions may not be as great as with water injection, and it has the added disadvantage that a supply of steam must be readily available. Exhaust gas recirculation, wherein a portion of the exhaust gases is recirculated back into the intake manifold, may result in NO_x reductions of up to 50 percent. This technique, however, may not be practical in many cases because the recirculated gases must be cooled to prevent engine malfunction. Other combustion modifications, designed to reduce the temperature and/or residence time of the combustion gases, can also be effective in reducing NO_x emissions by 10 to 40 percent in specific gas turbine units.

For reciprocating gas-fired engines, the most effective NO_x control measures are those that change the air-fuel ratio. Thus, changes in engine torque, speed, intake air temperature, etc., that in turn increase the air-fuel ratio, may all result in lower NO_x emissions. Exhaust gas recirculation may also be effective in lowering NO_x emissions although, as with turbines, there are practical limits because of the large quantities of exhaust gas that must be cooled. Available data suggest that other NO_x control measures, including water and steam injection, have only limited application to reciprocating gas fired engines.

Emission factors for natural gas fired pipeline compressor engines are presented in Table 3.2-1.

Table 3.2-1. **EMISSION FACTORS FOR HEAVY DUTY NATURAL GAS FIRED PIPELINE COMPRESSOR ENGINES[a]**

EMISSION FACTOR RATING: A

	Nitrogen oxides (as NO_2)[b]	Carbon monoxide	Hydrocarbons (as C)[c]	Sulfur dioxide[d]	Particulate[e]
Reciprocating engines					
lb/10^3 hp-hr	24	3.1	9.7	0.004	NA
g/hp-hr	11	1.4	4.4	0.002	NA
g/kW-hr	15	1.9	5.9	0.003	NA
lb/10^6 scf[f]	3,400	430	1,400	0.6	NA
kg/10^6 $\underline{N}m^3$[f]	55,400	7,020	21,800	9.2	NA
Gas turbines					
lb/10^3 hp-hr	2.9	1.1	0.2	0.004	NA
g/hp-hr	1.3	0.5	0.1	0.002	NA
g/kW-hr	1.7	0.7	0.1	0.003	NA
lb/10^6 scf[g]	300	120	23	0.6	NA
kg/10^6 $\underline{N}m^3$[g]	4,700	1,940	280	9.2	NA

[a]All factors based on References 2 and 3.

[b]These factors are for compressor engines operated at rated load. In general, NO_x emissions will increase with increasing load and intake (manifold) air temperature and decrease with increasing air-fuel ratios (excess air rates) and absolute humidity. Quantitative estimates of the effects of these variables are presented in Reference 2.

[c]These factors represent total hydrocarbons. Nonmethane hydrocarbons are estimated to make up to 5 to 10 percent of these totals, on the average.

[d]Based on an assumed sulfur content of pipeline gas of 2000 gr/10^6 scf (4600 g/$\underline{N}m^3$). If pipeline quality natural gas is not fired, a material balance should be performed to determine SO_2 emissions based on the actual sulfur content.

[e]Not available from existing data.

[f]These factors are calculated from the above factors for reciprocating engines assuming a heating value of 1050 Btu/scf (9350 kcal/$\underline{N}m^3$) for natural gas and an average fuel consumption of 7500 Btu/hp-hr (2530 kcal/kW-hr).

[g]These factors are calculated from the above factors for gas turbines assuming a heating value of 1,050 Btu/scf (9,350 kcal/$\underline{N}m^3$) of natural gas and an average fuel consumption of 10,000 Btu/hp-hr (3,380 kcal/kW-hr).

References for Section 3.2

1. Standard Support Document and Environmental Impact Statement - Stationary Reciprocating Internal Combustion Engines. Aerotherm/Acurex Corp., Mountain View, Calif. Prepared for Environmental Protection Agency, Research Triangle Park, N.C. under Contract No. 68-02-1318, Task Order No. 7, November 1974.

2. Urban, C.M. and K.J. Springer. Study of Exhaust Emissions from Natural Gas Pipeline Compressor Engines. Southwest Research Institute, San Antonio, Texas. Prepared for American Gas Association, Arlington, Va. February 1975.

3. Dietzmann, H.E. and K.J. Springer. Exhaust Emissions from Piston and Gas Turbine Engines Used in Natural Gas Transmission. Southwest Research Institute, San Antonio, Texas. Prepared for American Gas Association, Arlington, Va. January 1974.

3.3 Gasoline and Diesel Industrial Engines

3.3.1 General – This engine category covers a wide variety of industrial applications of both gasoline and diesel internal combustion power plants, such as fork lift trucks, mobile refrigeration units, generators, pumps, and portable well-drilling equipment. The rated power of these engines covers a rather substantial range—from less than 15 kW to 186 kW (20 to 250 hp) for gasoline engines and from 34 kW to 447 kW (45 to 600 hp) for diesel engines. Understandably, substantial differences in both annual usage (hours per year) and engine duty cycles also exist. It was necessary, therefore, to make reasonable assumptions concerning usage in order to formulate emission factors.[1]

3.3.2 Emissions – Once reasonable usage and duty cycles for this category were ascertained, emission values from each of the test engines [1] were aggregated (on the basis of nationwide engine population statistics) to arrive at the factors presented in Table 3.3-1. Because of their aggregate nature, data contained in this table must be applied to a population of industrial engines rather than to an individual power plant.

The best method for calculating emissions is on the basis of "brake specific" emission factors (g/kWh or lb/hphr). Emissions are calculated by taking the product of the brake specific emission factor, the usage in hours (that is, hours per year or hours per day), the power available (rated power), and the load factor (the power actually used divided by the power available).

Table 3.3-1. **EMISSION FACTORS FOR GASOLINE AND DIESEL POWERED INDUSTRIAL EQUIPMENT**
EMISSION FACTOR RATING: C

Pollutant[a]	Engine category[b]	
	Gasoline	Diesel
Carbon monoxide		
g/hr	5700.	197.
lb/hr	12.6	0.434
g/kWh	267.	4.06
g/hphr	199.	3.03
kg/10^3 liter	472.	12.2
lb/10^3 gal	3940.	102.
Exhaust hydrocarbons		
g/hr	191.	72.8
lb/hr	0.421	0.160
g/kWh	8.95	1.50
g/hphr	6.68	1.12
kg/10^3 liter	15.8	4.49
lb/10^3 gal	132.	37.5
Evaporative hydrocarbons		
g/hr	62.0	–
lb/hr	0.137	–
Crankcase hydrocarbons		
g/hr	38.3	–
lb/hr	0.084	–

Table 3.3-1 (continued). EMISSION FACTORS FOR GASOLINE AND DIESEL POWERED INDUSTRIAL EQUIPMENT
EMISSION FACTOR RATING: C

Pollutant[a]	Engine category[b]	
	Gasoline	Diesel
Nitrogen oxides		
g/hr	148.	910.
lb/hr	0.326	2.01
g/kWh	6.92	18.8
g/hphr	5.16	14.0
kg/10^3 liter	12.2	56.2
lb/10^3 gal	102.	469.
Aldehydes		
g/hr	6.33	13.7
lb/hr	0.014	0.030
g/kWh	0.30	0.28
g/hphr	0.22	0.21
kg/10^3 liter	0.522	0.84
lb/10^3 gal	4.36	7.04
Sulfur oxides		
g/hr	7.67	60.5
lb/hr	0.017	0.133
g/kWh	0.359	1.25
g/hphr	0.268	0.931
kg/10^3 liter	0.636	3.74
lb/10^3 gal	5.31	31.2
Particulate		
g/hr	9.33	65.0
lb/hr	0.021	0.143
g/kWh	0.439	1.34
g/hphr	0.327	1.00
kg/10^3 liter	0.775	4.01
lb/10^3 gal	6.47	33.5

[a]References 1 and 2.

[b]As discussed in the text, the engines used to determine the results in this table cover a wide range of uses and power. The listed values do not, however, necessarily apply to some very large stationary diesel engines.

References for Section 3.3

1. Hare, C. T. and K. J. Springer. Exhaust Emissions from Uncontrolled Vehicles and Related Equipment Using Internal Combustion Engines. Final Report. Part 5: Heavy-Duty Farm, Construction, and Industrial Engines. Southwest Research Institute. San Antonio, Texas. Prepared for Environmental Protection Agency, Research Triangle Park, N.C., under Contract No. EHS 70-108. October 1973. 105 p.

2. Hare, C. T. Letter to C. C. Masser of the Environmental Protection Agency concerning fuel-based emission rates for farm, construction, and industrial engines. San Antonio, Tex. January 14, 1974.

3.4 STATIONARY LARGE BORE DIESEL AND DUAL FUEL ENGINES

3.4.1 General

The primary domestic use of large bore diesel engines, i.e., those greater than 560 cubic inch displacement per cylinder (CID/CYL), is in oil and gas exploration and production. These engines, in groups of three to five, supply mechanical power to operate drilling (rotary table), mud pumping and hoisting equipment, and may also operate pumps or auxiliary power generators. Another frequent application of large bore diesels is electricity generation for both base and standby service. Smaller uses include irrigation, hoisting and nuclear power plant emergency cooling water pump operation.

Dual fuel engines were developed to obtain compression ignition performance and the economy of natural gas, using a minimum of 5 to 6 percent diesel fuel to ignite the natural gas. Dual fuel large bore engines (greater than 560 CID/CYL) have been used almost exclusively for prime electric power generation.

3.4.2 Emissions and Controls

The primary pollutant of concern from large bore diesel and dual fuel engines is NO_x, which readily forms in the high temperature, pressure and excess air environment found in these engines. Lesser amounts of carbon monoxide and hydrocarbons are also emitted. Sulfur dioxide emissions will usually be quite low because of the negligible sulfur content of diesel fuels and natural gas.

The major variables affecting NO_x emissions from diesel engines are injection timing, manifold air temperature, engine speed, engine load and ambient humidity. In general, NO_x emissions decrease with increasing humidity.

Because NO_x is the primary pollutant from diesel and dual fuel engines, control measures to date have been directed mainly at limiting NO_x emissions. The most effective NO_x control technique for diesel engines is fuel injection retard, achieving reductions (at eight degrees of retard) of up to 40 percent. Additional NO_x reductions are possible with combined retard and air/fuel ratio change. Both retarded fuel injection (8°) and air/fuel ratio change of five percent are also effective in reducing NO_x emissions from dual fuel engines, achieving nominal NO_x reductions of about 40 percent and maximum NO_x reductions of up to 70 percent.

Other NO_x control techniques exist but are not considered feasible because of excessive fuel penalties, capital cost, or maintenance or operational problems. These techniques include exhaust gas recirculation (EGR), combustion chamber modification, water injection and catalytic reduction.

TABLE 3.4-1. EMISSION FACTORS FOR STATIONARY LARGE BORE DIESEL AND DUAL FUEL ENGINES[a]

EMISSION FACTOR RATING: C

Engine type	Particulate[b]	Nitrogen oxides[c]	Carbon monoxide	VOC[d]		Sulfur dioxide[e]
				Methane	Nonmethane	
Diesel						
$lb/10^3$ hph	2.4	24	6.4	0.07	0.63	2.8
g/hph	1.1	11	2.9	0.03	0.29	1.3
g/kWh	1.5	15	3.9	0.04	0.4	1.7
$lb/10^3$ gal[f]	50	500	130	1	13	60
g/l	6	60	16	0.2	1.6	7.2
Dual fuel						
$lb/10^3$ hph	NA	18	5.9	4.7	1.5	0.70
g/hph	NA	8	2.7	2.1	0.7	0.32
g/kWh	NA	11	3.6	2.9	0.9	0.43

[a]Representative uncontrolled levels for each fuel, determined by weighting data from several manufacturers. Weighting based on % of total horsepower sold by each manufacturer during a five year period. NA = not available.

[b]Emission Factor Rating: E. Approximation based on test of a medium bore diesel. Emissions are minimum expected for engine operating at 50 - 100% full rated load. At 0% load, emissions would increase to 30 g/l. Reference 2.

[c]Measured as NO_2. Factors are for engines operated at rated load and speed.

[d]Nonmethane VOC is 90% of total VOC from diesel engines but only 25% of total VOC emissions from dual fuel engines. Individual chemical species within the nonmethane fraction are not identified. Molecular weight of nonmethane gas stream is assumed to be that of methane.

[e]Based on assumed sulfur content of 0.4 weight % for diesel fuel and 0.46 g/scm (0.20 gr/scf) for pipeline quality natural gas. Dual fuel SO_2 emissions based on 5% oil/95% gas mix. Emissions should be adjusted for other fuel ratios.

[f]These factors calculated from the above factors, assuming heating values of 40 MJ/l (145,000 Btu/gal) for oil and 41 MJ/scm (1100 Btu/scf) for natural gas, and an average fuel consumption of 9.9 MJ/kWh (7000 Btu/hph).

References for Section 3.4

1. Standards Support And Environmental Impact Statement, Volume I: Stationary Internal Combustion Engines, EPA-450/2-78-125a, U. S. Environmental Protection Agency, Research Triangle Park, NC, July 1979.

2. Telephone communication between William H. Lamason, Office Of Air Quality Planning And Standards, U. S. Environmental Protection Agency, Research Triangle Park, NC, and John H. Wasser, Office Of Research And Development, U. S. Environmental Protection Agency, Research Triangle Park, NC, July 15, 1983.

4. EVAPORATION LOSS SOURCES

Evaporation losses include the organic solvents emitted from dry cleaning plants and surface coating operations, and the volatile matter in petroleum products. This chapter presents the volatile organic emissions from these sources, including liquid petroleum storage and marketing. Where possible, the effect is shown of controls to reduce the emissions of organic compounds.

4.1 DRY CLEANING

4.1.1 General[1,2]

Dry cleaning involves the cleaning of fabrics with nonaqueous organic solvents. The dry cleaning process requires three steps: (1) washing the fabric in solvent, (2) spinning to extract excess solvent and (3) drying by tumbling in a hot air stream.

Two general types of cleaning fluids are used in the industry, petroleum solvents and synthetic solvents. Petroleum solvents, such as Stoddard or 140-F, are inexpensive combustible hydrocarbon mixtures similar to kerosene. Operations using petroleum solvents are known as petroleum plants. Synthetic solvents are nonflammable but more expensive halogenated hydrocarbons. Perchloroethylene and trichlorotrifluoroethane are the two synthetic dry cleaning solvents presently in use. Operations using these synthetic solvents are respectively called "perc" plants and fluorocarbon plants.

There are two basic types of dry cleaning machines, transfer and dry-to-dry. Transfer machines accomplish washing and drying in separate machines. Usually, the washer extracts excess solvent from the clothes before they are transferred to the dryer, but some older petroleum plants have separate extractors for this purpose. Dry-to-dry machines are single units that perform all of the washing, extraction and drying operations. All petroleum solvent machines are the transfer type, but synthetic solvent plants can be either type.

The dry cleaning industry can be divided into three sectors, coin operated facilities, commercial operations and industrial cleaners. Coin operated facilities are usually part of a laundry supplying "self-service" dry cleaning for consumers. Only synthetic solvents are used in coin operated dry cleaning machines. Such machines are small, with a capacity of 3.6 to 11.5 kg (8 to 25 lb) of clothing.

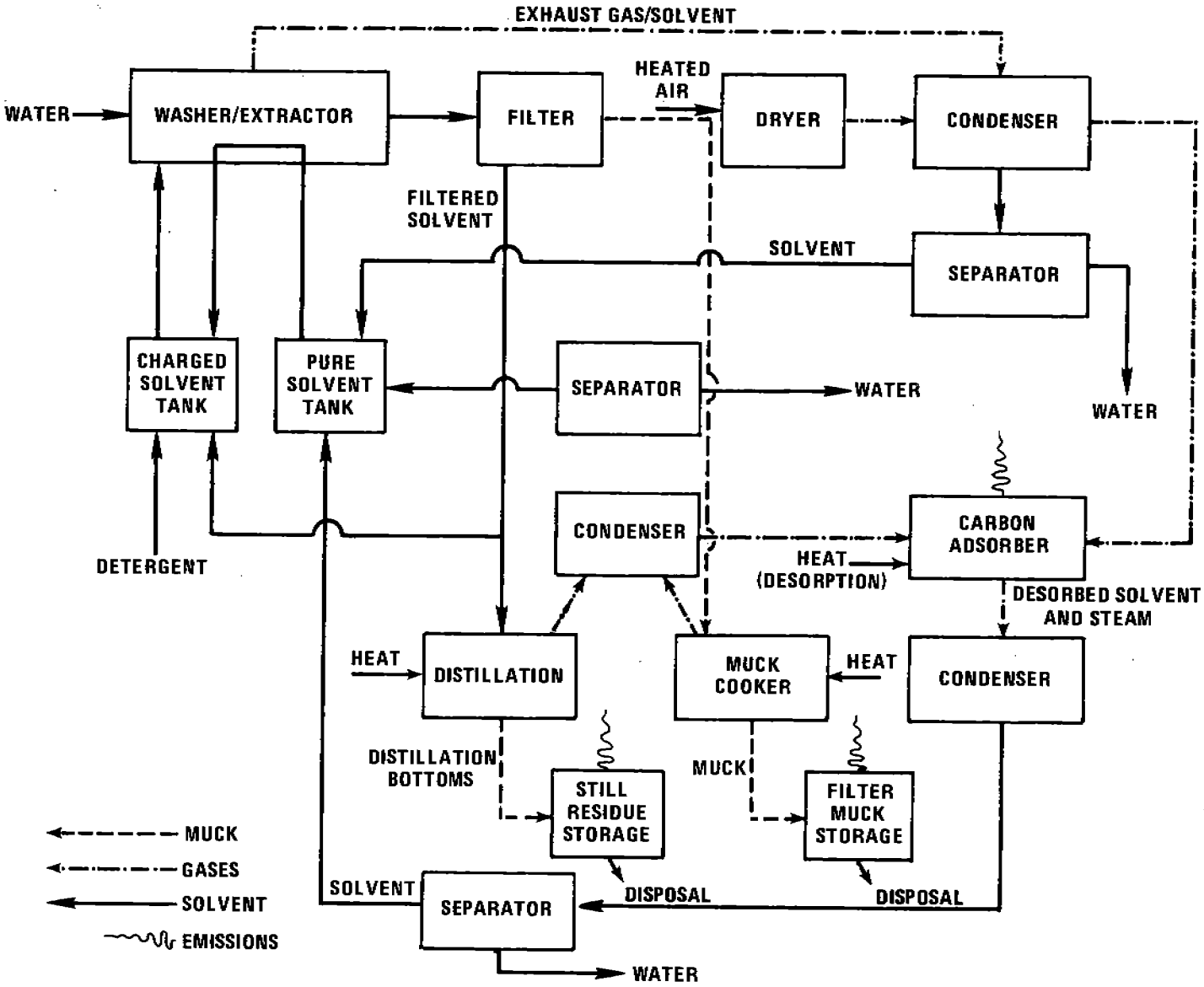

Figure 4.1-1. Perchloroethylene dry cleaning plant flow diagram.

Commercial operations, such as small neighborhood or franchise dry cleaning shops, clean soiled apparel for the consumer. Generally, perchloroethylene and petroleum solvents are used in commercial operations. A typical "perc" plant operates a 14 to 27 kg (30 to 60 lb) capacity washer/extractor and an equivalent size reclaiming dryer.

Industrial cleaners are larger dry cleaning plants which supply rental service of uniforms, mats, mops, etc., to businesses or industries. Perchloroethylene is used by approximately 50 percent of the industrial dry cleaning establishments. A typical large industrial cleaner has a 230 kg (500 lb) capacity washer/extractor and three to six 38 kg (100 lb) capacity dryers.

A typical perc plant is shown in Figure 4.1-1. Although one solvent tank may be used, the typical perc plant uses two tanks for washing. One tank contains pure solvent, and the other contains "charged" solvent (used solvent to which small amounts of detergent have been added to aid in cleaning). Generally, clothes are cleaned in charged solvent and rinsed in pure solvent. A water bath may also be used.

After the clothes have been washed, the used solvent is filtered, and part of the filtered solvent is returned to the charged solvent tank for washing the next load. The remaining solvent is then distilled to remove oils, fats, greases, etc., and is returned to the pure solvent tank. The resulting distillation bottoms are typically stored on the premises until disposed of. The filter cake and collected solids (muck) are usually removed from the filter once a day. Before disposal, the muck may be "cooked" to recover additional solvent. Still and muck cooker vapors are vented to a condenser and separator, where more solvent is reclaimed. In many perc plants, the condenser offgases are vented to a carbon adsorption unit for additional solvent recovery.

After washing, the clothes are transferred to the dryer to be tumbled in a heated air stream. Exhaust gases from the dryer, along with a small amount of exhaust gases from the washer/extractor, are vented to a water cooled condenser and water separator. Recovered solvent is returned to the pure solvent storage tank. In 30 to 50 percent of the perc plants, the condenser offgases are vented to a carbon adsorption unit for additional solvent recovery. To reclaim this solvent, the unit must be periodically desorbed with steam, usually at the end of each day. Desorbed solvent and water are condensed and separated, and recovered solvent is returned to the pure solvent tank.

A petroleum plant would differ from Figure 4.1-1 chiefly in that there would be no recovery of solvent from the washer and dryer and no muck cooker. A fluorocarbon plant would differ in that an unvented refrigeration system would be used in place of a carbon adsorption unit. Another difference is that a typical

fluorocarbon plant could use a cartridge filter which is drained and disposed of after several hundred cycles.

Emissions and Controls[1-3]

The solvent itself is the primary emission from dry cleaning operations. Solvent is given off by washer, dryer, solvent still, muck cooker, still residue and filter muck storage areas, as well as by leaky pipes, flanges and pumps.

Petroleum plants have not generally employed solvent recovery, because of the low cost of petroleum solvents and the fire hazards associated with collecting vapors. Some emission control, however, can be obtained by maintaining all equipment (e.g., preventing lint accumulation, solvent leakage, etc.) and by using good operating practices (e.g., not overloading machinery). Both carbon adsorption and incineration appear to be technically feasible controls for petroleum plants, but costs are high.

Solvent recovery is necessary in perc plants due to the higher cost of perchloroethylene. As shown in Figure 4.1-1, recovery is effected on the washer, dryer, still and muck cooker through the use of condensers, water/solvent separators and carbon adsorption units. Typically once a day, solvent in the carbon adsorption unit is desorbed with steam, condensed, separated from the condensed water and returned to the pure solvent storage tank. Residual solvent emitted from treated distillation bottoms and muck is not recovered. As in petroleum plants, good emission control can be obtained by good housekeeping (maintaining all equipment and using good operating practices).

All fluorocarbon machines are of the dry-to-dry variety to conserve solvent vapor, and all are closed systems with built in solvent recovery. High emissions can occur, however, as a result of poor maintenance and operation of equipment. Refrigeration systems are installed on newer machines to recover solvent from the washer/dryer exhaust gases.

Emission factors for dry cleaning operations are presented in Table 4.1-1.

Typical coin operated and commercial plants emit less than 10^6 grams (one ton) per year. Some applications of emission estimates are too broad to identify every small facility. For estimates over large areas, the factors in Table 4.1-2 may be applied for coin operated and commercial dry cleaning emissions.

TABLE 4.1-1. SOLVENT LOSS EMISSION FACTORS FOR DRY CLEANING OPERATIONS

EMISSION FACTOR RATING: B

Solvent Type (Process used)	Source	Emission Rate[a] Typical system kg/100 kg (lb/100 lb)	Emission Rate[a] Well controlled system kg/100 kg (lb/100 lb)
Petroleum (transfer process)	washer/dryer[b]	18	2[c]
	filter disposal		
	uncooked (drained)	8	
	centrifuged		0.5 - 1
	still residue disposal	1	0.5 - 1
	miscellaneous[d]	1	1
Perchloroethylene (transfer process)	washer/dryer/still/muck cooker	8[e]	0.3[c]
	filter disposal		
	uncooked muck	14	
	cooked muck	1.3	0.5 - 1.3
	cartridge filter	1.1	0.5 - 1.1
	still residue disposal	1.6	0.5 - 1.6
	miscellaneous[d]	1.5	1
Trichlorotrifluoroethane (dry-to-dry process)	washer/dryer/still[f]	0	0
	cartridge filter disposal	1	1
	still residue disposal	0.5	0.5
	miscellaneous[d]	1 - 3	1 - 3

[a] References 1-4. Units are in terms of weight solvent per weight of clothes cleaned (capacity x loads). Emissions also may be estimated by determining the amount of solvent consumed. Assuming that all solvent input is eventually evaporated to the atmosphere, an emission factor of 2000 lb/ton (1000 kg/Mg) of solvent consumed can be applied.

[b] Different material in wash retains a different amount of solvent (synthetics, 10 kg/100 kg; cotton, 20 kg/100 kg; leather, 40 kg/100 kg).

[c] Emissions from washer, dryer, still and muck cooker are passed collectively through a carbon adsorber.

[d] Miscellaneous sources include fugitives from flanges, pumps, pipes and storage tanks, and fixed losses such as opening and closing dryers, etc.

[e] Uncontrolled emissions from washer, dryer, still and muck cooker average about 8 kg/100 kg (8 lb/100 lb).

[f] About 15% of solvent emitted is from washer, 75% dryer, 5% each from still and muck cooker.

[g] Based on the typical refrigeration system installed in fluorocarbon plants.

TABLE 4.1-2. PER CAPITA SOLVENT LOSS EMISSION FACTORS FOR DRY CLEANING PLANTS[a]

EMISSION FACTOR RATING: B

Operation	Emission Factors kg/yr/capita (lb/year/cap)	g/day/capita[b] (lb/day/cap)
Commercial	0.6 (1.3)	1.9 (0.004)
Coin operated	0.2 (0.4)	0.6 (0.001)

[a]References 2-4. All nonmethane VOC.
[b]Assumes a 6 day operating week (313 days/yr).

References for Section 4.1

1. Study To Support New Source Performance Standards for the Dry Cleaning Industry, EPA Contract No. 68-02-1412, TRW, Inc., Vienna, VA, May 1976.

2. Perchloroethylene Dry Cleaners - Background Information for Proposed Standards, EPA-450/3-79-029a, U.S. Environmental Protection Agency, Research Triangle Park, NC, August 1980.

3. Control of Volatile Organic Emissions from Perchloroethylene Dry Cleaning Systems, EPA-450/2-78-050, U.S. Environmental Protection Agency, Research Triangle Park, NC, December 1978.

4. Control of Volatile Organic Emissions from Petroleum Dry Cleaners (Draft), Office of Air Quality Planning and Standards, U.S. Environmental Protection Agency, Research Triangle Park, NC, February 1981.

4.2 SURFACE COATING

Surface coating operations involve the application of paint, varnish, lacquer or paint primer, for decorative or protective purposes. This is accomplished by brushing, rollings, spraying, flow coating and dipping operations. Some industrial surface coating operations include automobile assembly, job enameling, and manufacturing of aircraft, containers, furniture, appliances and plastic products. Nonindustrial applications of surface coatings include automobile refinishing and architectural coating of domestic, industrial, government and institutional structures, including building interiors and exteriors and exteriors and signs and highway markings. Nonindustrial Surface Coating is discussed below in Section 4.2.1, and Industrial Surface Coating in Section 4.2.2.

Emissions of volatile organic compounds (VOC) occur in surface coating operations because of evaporation of the paint vehicle, thinner or solvent used to facilitate the application of coatings. The major factor affecting these emissions is the amount of volatile matter contained in the coating. The volatile portion of most common surface coatings averages about 50 percent, and most, if not all, of this is emitted during the application of coatings. The major factor affecting these emissions is the amount of volatile matter contained in the coating. The volatile portion of most common surface coatings averages about 50 percent, and most, if not all, of this is emitted during the application and drying of the coating. The compounds released include aliphatic and aromatic hydrocarbons, alcohols, ketones, esters, alkyl and aryl hydrocarbon solvents, and mineral spirits. Table 4.2-1 presents emission factors for general surface coating operations.

TABLE 4.2-1. EMISSION FACTORS FOR GENERAL SURFACE COATING APPLICATIONS[a]

EMISSION FACTOR RATING: B

Coating Type	Emissions[b]	
	kg/Mg	lb/ton
Paint	560	1120
Varnish and Shellac	500	1000
Lacquer	770	1540
Enamel	420	840
Primer (zinc chromate)	660	1320

[a]Reference 1.
[b]Reference 2. Nonmethane VOC.

References for Section 4.2

1. Products Finishing, 41(6A):4-54, March 1977.

2. Air Pollution Engineering Manual, Second Edition, AP-40, U. S. Environmental Protection Agency, Research Triangle Park, NC, May 1973. Out of Print.

4.2.1 NONINDUSTRIAL SURFACE COATING[1,3,5]

Nonindustrial surface coating operations are nonmanufacturing applications of surface coating. Two major categories are architectural surface coating and automobile refinishing. Architectural uses are considered to include both industrial and nonindustrial structures. Automobile refinishing pertains to the painting of damaged or worn highway vehicle finishes and not the painting of vehicles during manufacture.

Emissions from a single architectural structure or automobile refinishing are calculated by using total volume and content and weight of volatile constituents for the coating employed in the specific application. Estimating emissions for a large area which includes many major and minor applications of nonindustrial surface coatings requires that area source estimates be developed. Architectural surface coating and auto refinishing emissions data are often difficult to compile for a large geographical area. In cases where a large inventory is being developed and/or resources are unavailable for detailed accounting of actual volume of coatings for these applications, emissions may be assumed proportional to population or number of employees. Table 4.2.1-1 presents factors from national emission data and emissions per population or employee for architectural surface coating and automobile refinishing.

TABLE 4.2.1-1. NATIONAL EMISSIONS AND EMISSION FACTORS FOR VOC FROM ARCHITECTURAL SURFACE COATING AND AUTOMOBILE REFINISHING[a]

EMISSION FACTOR RATING: C

Emissions	Architectural Surface Coating	Automobile Refinishing
National		
Mg/yr	446,000	181,000
ton/yr	491,000	199,000
Per capita		
kg/yr (lb/yr)	21.4 (4.6)	0.84 (1.9)
g/day (lb/day)	5.8 (0.013)[b]	2.7 (0.006)[c]
Per employee		
Mg/yr (ton/yr)	-	2.3 (2.6)
kg/day (lb/day)	-	7.4 (16.3)[c]

[a]References 3 and 5 - 8. All nonmethane organics.
[b]Reference 8. Calculated by dividing kg/yr (lb/yr) by 365 days and converting to appropriate units. Assumes that 75% of annual emissions occurs over a 9 month ozone season. For shorter ozone seasons, adjust accordingly.
[c]Assumes a 6 day operating week (313 days/yr).

The use of waterborne architectural coatings reduces volatile organic compound emissions. Current consumption trends indicate increasing substitution of waterborne architectural coatings for those using solvent. Automobile refinishing often is done in areas only slightly enclosed, which makes control of emissions difficult. Where automobile refinishing takes place in an enclosed area, control of the gaseous emissions can be accomplished by the use of adsorbers (activated carbon) or afterburners. The collection efficiency of activated carbon has been reported at 90 percent or greater. Water curtains or filler pads have little or no effect on escaping solvent vapors, but they are widely used to stop paint particulate emissions.

References for Section 4.2.1

1. Air Pollution Engineering Manual, Second Edition, AP-40, U.S. Environmental Protection Agency, Research Triangle Park, NC, May 1973. Out of Print.

2. Control Techniques for Hydrocarbon and Organic Gases from Stationary Sources, AP-68, U.S. Environmental Protection Agency, Research Triangle Park, NC, October 1969.

3. Control Techniques Guideline for Architectural Surface Coatings (Draft), Office of Air Quality Planning and Standards, U.S. Environmental Protection Agency, Research Triangle Park, NC, February 1979.

4. Air Pollutant Emission Factors, HEW Contract No. CPA-22-69-119, Resources Research Inc., Reston, VA, April 1970.

5. Procedures for the Preparation of Emission Inventories for Volatile Organic Compounds, Volume I, Second Edition, EPA-450/2-77-028, U.S. Environmental Protection Agency, Research Triangle Park, NC, September 1980.

6. W.H. Lamason, "Technical Discussion of Per Capita Emission Factors for Several Area Sources of Volatile Organic Compounds", Monitoring and Data Analysis Division, U.S. Environmental Protection Agency, Research Triangle Park, NC, March 15, 1981. Unpublished.

7. End Use of Solvents Containing Volatile Organic Compounds, EPA-450/3-79-032, U.S. Environmental Protection Agency, Research Triangle Park, NC, May 1979.

8. Written communications between Bill Lamason and Chuck Mann, Monitoring and Data Analysis Division, U.S. Environmental Protection Agency, Research Triangle Park, NC, October 1980 and March 1981.

9. Final Emission Inventory Requirements for 1982 Ozone State Implementation Plans, EPA-450/4-80-016, U.S. Environmental Protection Agency, Research Triangle Park, NC, December 1980.

4.2.2 INDUSTRIAL SURFACE COATING

4.2.2.1 GENERAL INDUSTRIAL SURFACE COATING[1-4]

Process Description - Surface coating is the application of decorative or protective materials in liquid or powder form to substrates. These coatings normally include general solvent type paints, varnishes, lacquers and water thinned paints. After application of coating by one of a variety of methods such as brushing, rolling, spraying, dipping and flow coating, the surface is air and/or heat dried to remove the volatile solvents from the coated surface. Powder type coatings can be applied to a hot surface or can be melted after application and caused to flow together. Other coatings can be polymerized after application by thermal curing with infrared or electron beam systems.

Coating Operations - There are both "toll" ("independent") and "captive" surface coating operations. Toll operations fill orders to various manufacturer specifications, and thus change coating and solvent conditions more frequently than do captive companies, which fabricate and coat products within a single facility and which may operate continuously with the same solvents. Toll and captive operations differ in emission control systems applicable to coating lines, because not all controls are technically feasible in toll situations.

Coating Formulations - Conventional coatings contain at least 30 volume percent solvents to permit easy handling and application. They typically contain 70 to 85 percent solvents by volume. These solvents may be of one component or of a mixture of volatile ethers, acetates, aromatics, cellosolves, aliphatic hydrocarbons and/or water. Coatings with 30 volume percent of solvent or less are called low solvent or "high solids" coatings.

Waterborne coatings, which have recently gained substantial use, are of several types: water emulsion, water soluble and colloidal dispersion, and electrocoat. Common ratios of water to solvent organics in emulsion and dispersion coatings are 80/20 and 70/30.

Two part catalyzed coatings to be dried, powder coatings, hot melts, and radiation cured (ultraviolet and electron beam) coatings contain essentially no volatile organic compounds (VOC), although some monomers and other lower molecular weight organics may volatilize.

Depending on the product requirements and the material being coated, a surface may have one or more layers of coating applied. The first coat may be applied to cover surface imperfections or to assure adhesion of the coating. The intermediate coats usually provide the required color, texture or print, and a clear protective topcoat is often added. General coating types do not differ from those described, although the intended use and the material to be coated determine the composition and resins used in the coatings.

Coating Application Procedures - Conventional spray, which is air atomized and usually hand operated, is one of the most versatile coating methods. Colors can be changed easily, and a variety of sizes and shapes can be painted under

many operating conditions. Conventional, catalyzed or waterborne coatings can be applied with little modification. The disadvantages are low efficiency from overspray and high energy requirements for the air compressor.

In hot airless spray, the paint is forced through an atomizing nozzle. Since volumetric flow is less, overspray is reduced. Less solvent is also required, thus reducing VOC emissions. Care must be taken for proper flow of the coating, to avoid plugging and abrading of the nozzle orifice. Electrostatic spray is most efficient for low visocity paints. Charged paint particles are attracted to an oppositely charged surface. Spray guns, spinning discs or bell shaped atomizers can be used to atomize the paint. Application efficiencies of 90 to 95 percent are possible, with good "wraparound" and edge coating. Interiors and recessed surfaces are difficult to coat, however.

Roller coating is used to apply coatings and inks to flat surfaces. If the cylindrical rollers move in the same direction as the surface to be coated, the system is called a direct roll coater. If they rotate in the opposite direction, the system is a reverse roll coater. Coatings can be applied to any flat surface efficiently and uniformly and at high speeds. Printing and decorative graining are applied with direct rollers. Reverse rollers are used to apply fillers to porous or imperfect substrates, including papers and fabrics, to give a smooth uniform surface.

Knife coating is relatively inexpensive, but it is not appropriate for coating unstable materials, such as some knit goods, or when a high degree of accuracy in the coating thickness is required.

Rotogravure printing is widely used in coating vinyl imitation leathers and wallpaper, and in the application of a transparent protective layer over the printed pattern. In rotogravure printing, the image area is recessed, or "intaglio", relative to the copper plated cylinder on which the image is engraved. The ink is picked up on the engraved area, and excess ink is scraped off the nonimage area with a "doctor blade". The image is transferred directly to the paper or other substrate, which is web fed, and the product is then dried.

Dip coating requires that the surface of the subject be immersed in a bath of paint. Dipping is effective for coating irregularly shaped or bulky items and for priming. All surfaces are covered, but coating thickness varies, edge blistering can occur, and a good appearance is not always achieved.

In flow coating, materials to be coated are conveyed through a flow of paint. Paint flow is directed, without atomization, toward the surface through multiple nozzles, then is caught in a trough and recycled. For flat surfaces, close control of film thickness can be maintained by passing the surface through a constantly flowing curtain of paint at a controlled rate.

Emissions and Controls - Essentially all of the VOC emitted from the surface coating industry is from the solvents which are used in the paint formulations, used to thin paints at the coating facility or used for cleanup. All unrecovered solvent can be considered potential emissions. Monomers and low molecular weight organics can be emitted from those coatings that do not include solvents, but such emissions are essentially negligible.

Emissions from surface coating for an uncontrolled facility can be estimated by assuming that all VOC in the coatings is emitted. Usually, coating consumption volume will be known, and some information about the types of coatings and solvents will be available. The choice of a particular emission factor will depend on the coating data available. If no specific information is given for the coating, it may be estimated from the data in Table 4.2.2.1-2.

TABLE 4.2.2.1-1. VOC EMISSION FACTORS FOR UNCONTROLLED SURFACE COATING[a]

EMISSION FACTOR RATING: B

Available information on coating	Emissions of VOC[b]	
	kg/liter of coating	lb/gal of coating
Conventional or waterborne paints		
VOC, wt % (d)	$\frac{d \cdot \text{coating density}^c}{100}$	$\frac{d \cdot \text{coating density}^c}{100}$
VOC, vol % (V)	$\frac{V \cdot 0.88^d}{100}$	$\frac{V \cdot 7.36^d}{100}$
Waterborne paint		
VOC as weight % of total volatiles - including water (X); total volatiles as weight % of coating (d)	$\frac{d \cdot X \cdot \text{coating density}^c}{100}$	$\frac{d \cdot X \cdot \text{coating density}^c}{100}$
VOC as volume % of total volatiles - including water (Y); total volatiles as volume % of coating (V)	$\frac{V \cdot Y \cdot 0.88^d}{100}$	$\frac{V \cdot Y \cdot 7.36^d}{100}$

[a]Material balance, when coatings volume use is known.

[b]For special purposes, factors expressed kg/l of coating less water may be desired. These may be computed as follows:

$$\underline{\text{Factor as kg/l of coating}} = \text{Factor as kg/l of coating less water}_1 - \frac{\text{volume \% water}}{100}$$

[c]If coating density is not known, it can be estimated from the information in Table 4.2.2.1-2.

[d]The values 0.88 (kg/l) and 7.36 (lb/gal) use the average density of solvent in coatings. Use the densities of the solvents in the coatings actually used by the source, if known.

TABLE 4.2.2.1-2. TYPICAL DENSITIES AND SOLIDS CONTENTS OF COATINGS

Type of coating	Density		Solids
	kg/liter	lb/gal	(volume %)
Enamel, air dry	0.91	7.6	39.6
Enamel, baking	1.09	9.1	42.8
Acrylic enamel	1.07	8.9	30.3
Alkyd enamel	0.96	8.0	47.2
Primer surfacer	1.13	9.4	49.0
Primer, epoxy	1.26	10.5	57.2
Varnish, baking	0.79	6.6	35.3
Lacquer, spraying	0.95	7.9	26.1
Vinyl, roller coat	0.92	7.7	12.0
Polyurethane	1.10	9.2	31.7
Stain	0.88	7.3	21.6
Sealer	0.84	7.0	11.7
Magnet wire enamel	0.94	7.8	25.0
Paper coating	0.92	7.7	22.0
Fabric coating	0.92	7.7	22.0

[a]Reference 1.

All solvents separately purchased as solvent that are used in surface coating operations and are not recovered subsequently can be considered potential emissions. Such VOC emissions at a facility can result from onsite dilution of coatings with solvent, from "makeup solvents" required in flow coating and, in some instances, dip coating, and from the solvents used for cleanup. Makeup solvents are added to coatings to compensate for standing losses, concentration or amount, and thus to bring the coating back to working specifications. Solvent emissions should be added to VOC emissions from coatings to get total emissions from a coating facility.

Typical ranges of control efficiencies are given in Table 4.2.2.1-3. Emission controls normally fall under one of three categories - modification in paint formula, process changes, or addon controls. These are discussed further in the specific subsections which follow.

TABLE 4.2.2.1-3. CONTROL EFFICIENCIES FOR SURFACE COATING OPERATIONS[a]

Control option	Reduction[b] (%)
Substitute waterborne coatings	60-95
Substitute low solvent coatings	40-80
Substitute powder coatings	92-98
Add afterburners/incinerators	95

[a]References 2-4.
[b]Expressed as % of total uncontrolled emission load.

References for Section 4.2.2.1

1. Controlling Pollution from the Manufacturing and Coating of Metal Products: Metal Coating Air Pollution Control, EPA-625/3-77-009, U. S. Environmental Protection Agency, Cincinnati, OH, May 1977.

2. H. R. Powers, "Economic and Energy Savings through Coating Selection", The Sherwin-Williams Company, Chicago, IL, February 8, 1978.

3. Air Pollution Engineering Manual, Second Edition, AP-40, U. S. Environmental Protection Agency, Research Triangle Park, NC, May 1973. Out of Print.

4. Products Finishing, 41(6A):4-54, March 1977.

4.2.2.2 CAN COATING[1-4]

Process Description - Cans may be made from a rectangular sheet (body blank) and two circular ends (three piece cans), or they can be drawn and wall ironed from a shallow cup to which an end is attached after the can is filled (two piece cans). There are major differences in coating practices, depending on the type of can and the product packaged in it. Figure 4.2.2.2-1 depicts a three piece can sheet printing operation.

There are both "toll" and "captive" can coating operations. The former fill orders to customer specifications, and the latter coat the metal for products fabricated within one facility. Some can coating operations do both toll and captive work, and some plants fabricate just can ends.

Three piece can manufacturing involves sheet coating and can fabricating. Sheet coating includes base coating and printing or lithographing, followed by curing at temperatures of up to 220°C (425°F). When the sheets have been formed into cylinders, the seam is sprayed, usually with a lacquer, to protect the exposed metal. If they are to contain an edible product, the interiors are spray coated, and the cans baked up to 220°C (425°F).

Two piece cans are used largely by beer and other beverage industries. The exteriors may be reverse roll coated in white and cured at 170 to 200°C (325 to 400°F). Several colors of ink are then transferred (sometimes by lithographic printing) to the cans as they rotate on a mandrel. A protective varnish may be roll coated over the inks. The coating is then cured in a single or multipass oven at temperatures of 180 to 200°C (350 to 400°F). The cans are spray coated on the interior and spray and/or roll coated on the exterior of the bottom end. A final baking at 110 to 200°C (225 to 400°F) completes the process.

Emissions and Controls - Emissions from can coating operations depend on composition of the coating, coated area, thickness of coat and efficiency of application. Post-application chemical changes, and nonsolvent contaminants like oven fuel combustion products, may also affect the composition of emissions. All solvent used and not recovered can be considered potential emissions.

Sources of can coating VOC emissions include the coating area and the oven area of the sheet base and lithographic coating lines, the three piece can side seam and interior spray coating processes, and the two piece can coating and end sealing compound lines. Emission rates vary with line speed, can or sheet size, and coating type. On sheet coating lines, where the coating is applied by rollers, most solvent evaporates in the oven. For other coating processes, the coating operation itself is the major source. Emissions can be estimated from the amount of coating applied by using the factors in Table 4.2.2.1-1 or, if the number and general nature of the coating lines are known, from Table 4.2.2.2-1.

Incineration and the use of waterborne and low solvent coatings both reduce organic vapor emissions. Other technically feasible control options, such as electrostatically sprayed powder coatings, are not presently applicable to the whole industry. Catalytic and thermal incinerators both can be used,

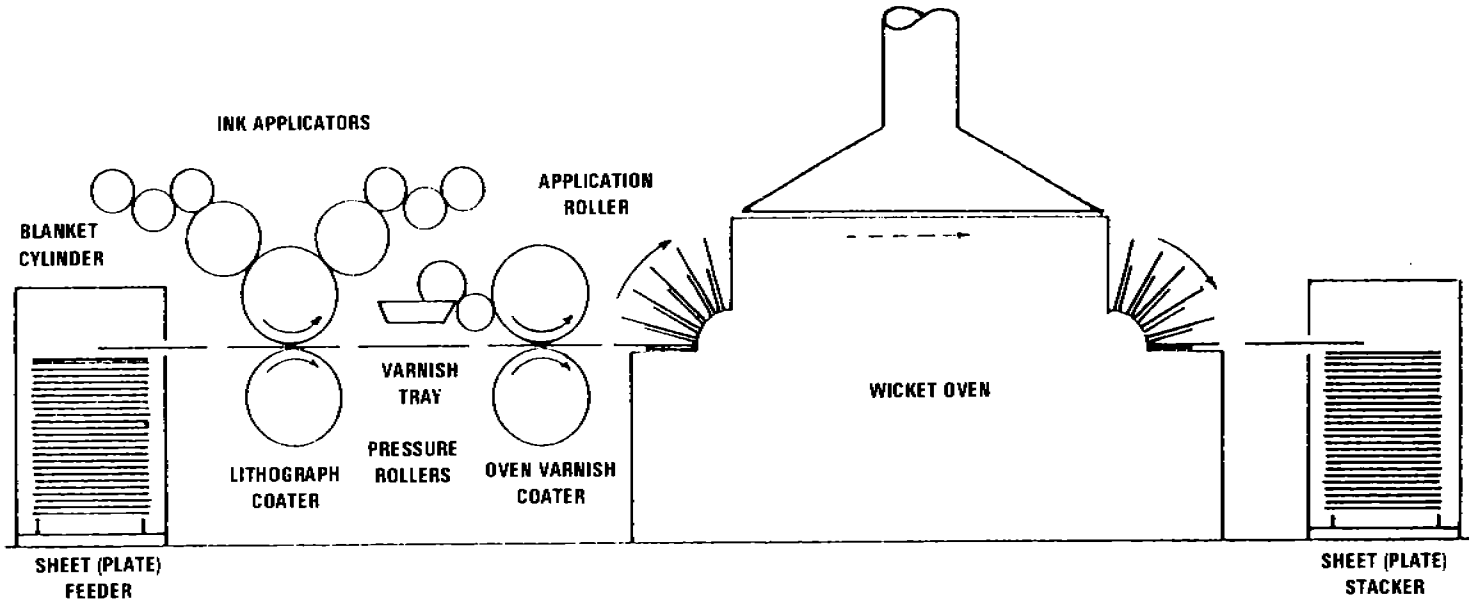

Figure 4.2.2.2-1. Three piece can sheet printing operation.[7]

TABLE 4.2.2.2-1. VOC EMISSION FACTORS FOR CAN COATING PROCESSES[a]

EMISSION FACTOR RATING: B

Process	Typical emissions from coating line[b]		Estimated fraction from coater area (%)	Estimated fraction from oven (%)	Typical organic emissions[c]	
	lb/hr	kg/hr			Mg/yr	ton/yr
Three piece can sheet base coating line	112	51	9-12	88-91	160	176
Three piece can sheet lithographic coating line	65	30	8-11	89-92	50	55
Three piece beer and beverage can - side seam spray coating process	12	5	100	air dried	18	20
Three piece beer and beverage can - interior body spray coating process	54	25	75-85	15-25	80	88
Two piece can coating line	86	39	NA	NA	260	287
Two piece can end sealing compound line	8	4	100	air dried	14	15

[a]Reference 3. NA = not available.
[b]Organic solvent emissions will vary according to line speed, size of can or sheet being coated, and type of coating used.
[c]Based upon normal operating conditions.

TABLE 4.2.2.2-2. CONTROL EFFICIENCIES FOR CAN COATING LINES[a]

Affected facility[b]	Control option	Reduction[c] (%)
Two Piece Can Lines		
Exterior coating	Thermal and catalytic incineration	90
	Waterborne and high solids coating	60-90
	Ultraviolet curing	≤100
Interior spray coating	Thermal and catalytic incineration	90
	Waterborne and high solids coating	60-90
	Powder coating	100
	Carbon adsorption	90
Three Piece Can Lines		
Sheet coating lines		
Exterior coating	Thermal and catalytic incineration	90
	Waterborne and high solids coating	60-90
	Ultraviolet curing	≤100
Interior spray coating	Thermal and catalytic incineration	90
	Waterborne and high solids coating	60-90
Can fabricating lines		
Side seam spray coating	Waterborne and high solids coating	60-90
	Powder (only for uncemented seams)	100
Interior spray coating	Thermal and catalytic incineration	90
	Waterborne and high solids coating	60-90
	Powder (only for uncemented seams)	100
	Carbon adsorption	90
End Coating Lines		
Sealing compound	Waterborne and high solids coating	70-95
Sheet coating	Carbon adsorption	90
	Thermal and catalytic incineration	90
	Waterborne and high solids coating	60-90

[a]Reference 3.
[b]Coil coating lines consist of coaters, ovens and quench areas. Sheet, can and end wire coating lines consist of coaters and ovens.
[c]Compared to conventional solvent base coatings used without any added

primers, backers (coatings on the reverse or backside of the coil), and some waterborne low to medium gloss topcoats have been developed that equal the performance of organic solventborne coatings for aluminum but have not yet been applied at full line speed in all cases. Waterborne coatings for other metals are being developed.

Available control technology includes the use of addon devices like incinerators and carbon adsorbers and a conversion to low solvent and ultraviolet curable coatings. Thermal and catalytic incinerators both may be used to control emissions from three piece can sheet base coating lines, sheet lithographic coating lines, and interior spray coating. Incineration is applicable to two piece can coating lines. Carbon adsorption is most acceptable to low temperature processes which use a limited number of solvents. Such processes include two and three piece can interior spray coating, two piece can end sealing compound lines, and three piece can side seam spray coating.

Low solvent coatings are not yet available to replace all the organic solventborne formulations presently used in the can industry. Waterborne basecoats have been successfully applied to two piece cans. Powder coating technology is used for side seam coating of noncemented three piece cans.

Ultraviolet curing technology is available for rapid drying of the first two colors of ink on three piece can sheet lithographic coating lines.

References for Section 4.2.2.2

1. T. W. Hughes, et al., Source Assessment: Prioritization of Air Pollution from Industrial Surface Coating Operations, EPA-650/2-75-019a, U. S. Environmental Protection Agency, Research Triangle Park, NC, November 1975.

2. Control of Volatile Organic Emissions from Existing Stationary Sources, Volume I: Control Methods for Surface Coating Operations, EPA-450/2-76-028, U. S. Environmental Protection Agency, Research Triangle Park, NC, May 1977.

3. Control of Volatile Organic Emissions from Existing Stationary Sources, Volume II: Surface Coating of Cans, Coils, Paper Fabrics, Automobiles, and Light Duty Trucks, EPA-450/2-77-008, U. S. Environmental Protection Agency, Research Triangle Park, NC, May 1977.

4. Air Pollution Control Technology Applicable to 26 Source of Volatile Organic Compounds, Office of Air Quality Planning and Standards, U. S. Environmental Protection Agency, Research Triangle Park, NC, May 27, 1977. Unpublished.

4.2.2.3 MAGNET WIRE COATING[1]

Process Description - Magnet wire coating is applying a coat of electrically insulating varnish or enamel to aluminum or copper wire used in electrical machinery. The wire is usually coated in large plants that both draw and insulate it and then sell it to electrical equipment manufacturers. The wire coating must meet rigid electrical, thermal and abrasion specifications.

Figure 4.2.2.3-1 shows a typical wire coating operation. The wire is unwound from spools and passed through an annealing furnace. Annealing softens the wire and cleans it by burning off oil and dirt. Usually, the wire then passes through a bath in the coating applicator and is drawn through an orifice or coating die to scrape off the excess. It is then dried and cured in a two zone oven first at 200°, then 430°C (400 and 806°F). Wire may pass through the coating applicator and the oven as many as twelve times to acquire the necessary thickness of coating.

Emissions and Controls - Emissions from wire coating operations depend on composition of the coating, thickness of coat and efficiency of application. Postapplication chemical changes, and nonsolvent contaminants such as oven fuel combustion products, may also affect the composition of emissions. All solvent used and not recovered can be considered potential emissions.

The exhaust from the oven is the most important source of solvent emissions in the wire coating plant. Emissions from the applicator are comparatively low, because a dip coating technique is used. See Figure 4.2.2.3-1.

Volatile organic compound (VOC) emissions may be estimated from the factors in Table 4.2.2.1-1, if the coating usage is known and if the coater has no controls. Most wire coaters built since 1960 do have controls, so the information in the following paragraph may be applicable. Table 4.2.2.3-1 gives estimated emissions for a typical wire coating line.

TABLE 4.2.2.3-1 ORGANIC SOLVENT EMISSIONS FROM A TYPICAL WIRE COATING LINE[a]

Coating Line[b]		Annual Totals[c]	
kg/hr	lb/hr	Mg/yr	ton/yr
12	26	84	93

[a]Reference 1.
[b]Organic solvent emissions vary from line to line by size and speed of wire, number of wires per oven, and number of passes through oven. A typical line may coat 544 kg (1,200 lb) wire/day. A plant may have many lines.
[c]Based upon normal operating conditions of 7,000 hr/yr for one line without incinerator.

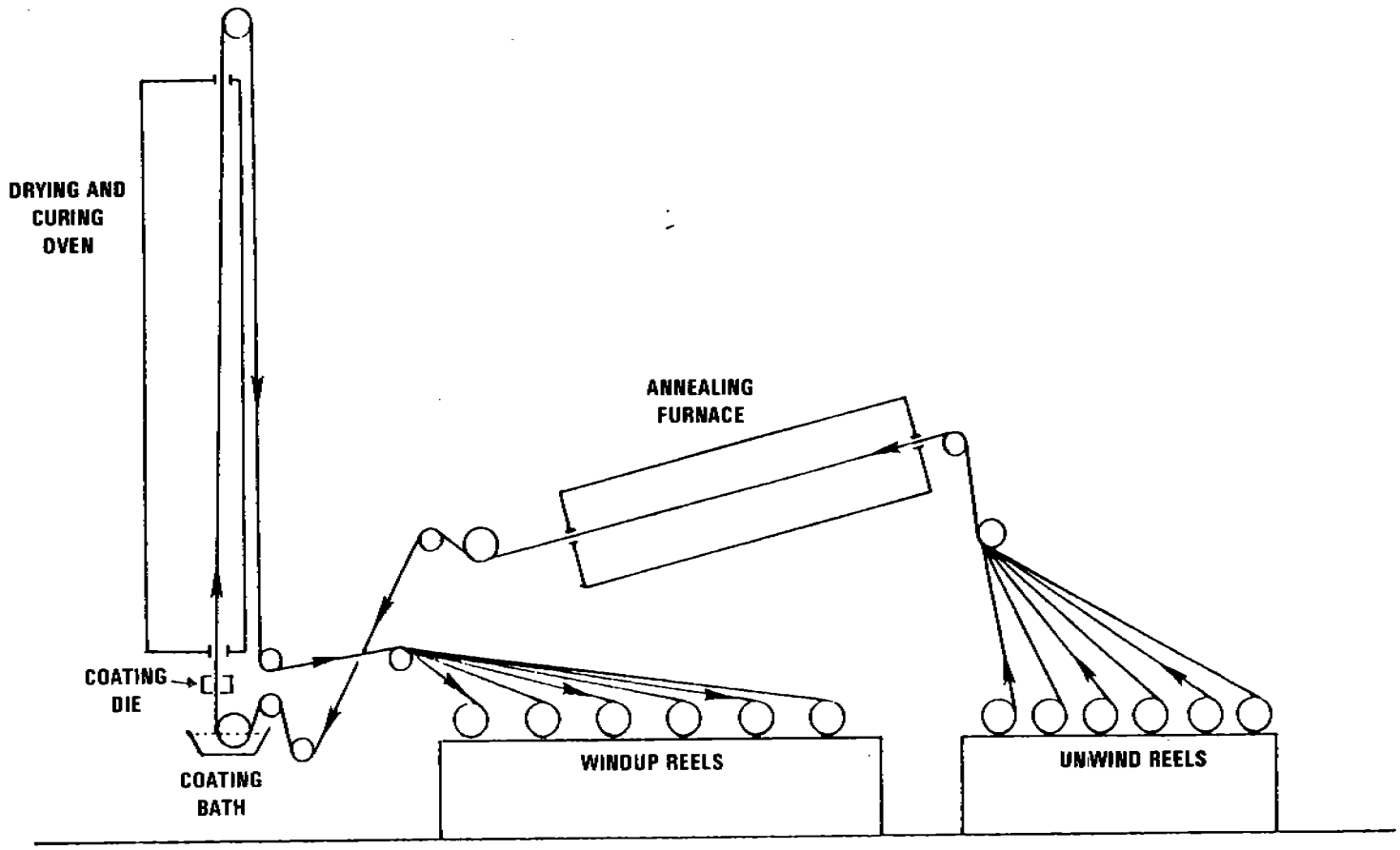

Figure 4.2.2.3-1. Wire coating line emission points.[9]

Incineration is the only commonly used technique to control emissions from wire coating operations. Since about 1960, all major wire coating designers have incorporated catalytic incinerators into their oven designs, because of the economic benefits. The internal catalytic incinerator burns solvent fumes and circulates heat back into the wire drying zone. Fuel otherwise needed to operate the oven is eliminated or greatly reduced, as are costs. Essentially all solvent emissions from the oven can be directed to an incinerator with a combustion efficiency of a least 90 percent.

Ultraviolet cured coatings are available for special systems. Carbon adsorption is not practical. Use of low solvent coatings is only a potential control, because they have not yet been developed with properties that meet industry's requirements.

References for Section 4.2.2.3

1. Control of Volatile Organic Emissions from Existing Stationary Sources, Volume IV: Surface Coating for Insulation of Magnet Wire, EPA-450/2-77-033, U. S. Environmental Protection Agency, Research Triangle Park, NC, December 1977.

2. Controlled and Uncontrolled Emission Rates and Applicable Limitations for Eighty Processes, EPA Contract Number 68-02-1382, TRC of New England, Wethersfield, CT, September 1976.

4.2.2.4 OTHER METAL COATING[1-3]

Process Description - Large appliance, metal furniture and miscellaneous metal part and product coating lines have many common operations, similar emissions and emission points, and available control technology. Figure 4.2.2.4-1 shows a typical metal furniture coating line.

Large appliances include doors, cases, lids, panels and interior support parts of washers, dryers, ranges, refrigerators, freezers, water heaters, air conditioners, and associated products. Metal furniture includes both outdoor and indoor pieces manufactured for household, business or institutional use. "Miscellaneous parts and products" herein denotes large and small farm machinery, small appliances, commercial and industrial machinery, fabricated metal products and other industries that coat metal under Standard Industrial Classification (SIC) codes 33 through 39.

Large Appliances - The coatings applied to large appliances are usually epoxy, epoxy/acrylic or polyester enamels for the primer or single coat, and acrylic enamels for the topcoat. Coatings containing alkyd resins are also used. Prime and interior single coats are applied at 25 to 36 volume percent solids. Topcoats and exterior single coats are applied at 30 to 40 volume percent. Lacquers may be used to touch up any scratches that occur during assembly. Coatings contain 2 to 15 solvents, typical of which are esters, ketones, apliphatics, alcohols, aromatics, ethers and terpenes.

Small parts are generally dip coated, and flow or spray coating is used for larger parts. Dip and flow coating are performed in an enclosed room vented either by a roof fan or by an exhaust system adjoining the drain board or tunnel. Down or side draft booths remove overspray and organic vapors from prime coat spraying. Spray booths are also equipped with dry filters or a water wash to trap overspray.

Parts may be touched up manually with conventional or airless spray equipment. Then they are sent to a flashoff area (either open or tunneled) for about 7 minutes and are baked in a multipass oven for about 20 minutes at 180 to 230°C (350 to 450°F). At that point, large appliance exterior parts go on to the topcoat application area, and single coated interior parts are moved to the assembly area of the plant.

The topcoat, and sometimes primers, are applied by automated electrostatic disc, bell or other types of spray equipment. Topcoats often are more than one color, changed by automatically flushing out the system with solvent. Both the topcoat and touchup spray areas are designed with side or down draft exhaust control. The parts go through about a 10 minute flashoff period, followed by baking in a multipass oven for 20 to 30 minutes at 140 to 180°C (270 to 350°F).

Metal Furniture - Most metal furniture coatings are enamels, although some lacquers are used. The most common coatings are alkyds, epoxies and acrylics, which contain the same solvents used in large appliance coatings, applied at about 25 to 35 percent solids.

On a typical metal furniture coating line (see Figure 4.2.2.4-1), the prime coat can be applied with the same methods used for large appliances, but it may be cured at slightly lower temperatures, 150 to 200°C (300 to 400°F).

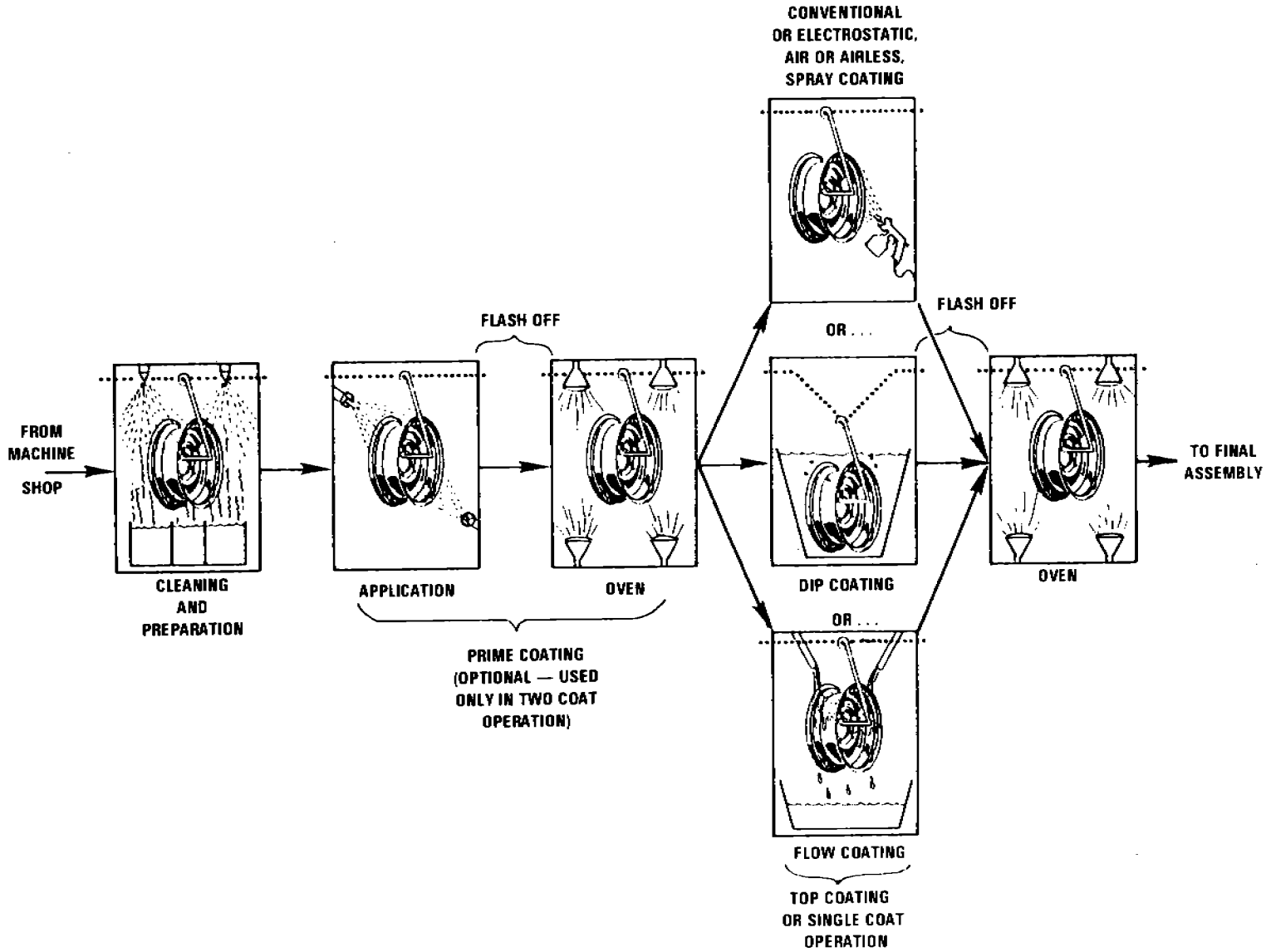

Figure 4.2.2.4-1 Metal product coating line emission points.[11]

The topcoat, usually the only coat, is applied with electrostatic spray or with conventional airless or air spray. Most spray coating is manual, in contrast to large appliance operations. Flow coating or dip coating is done, if the plant generally uses only one or two colors on a line.

The coated furniture is usually baked, but in some cases it is air dried. If it is to be baked, it passes through a flashoff area into a multizone oven at temperatures ranging from 150 to 230°C (300 to 450°F).

Miscellaneous Metal Parts and Products - Both enamels (30 to 40 volume percent solids) and lacquers (10 to 20 volume percent solids) are used to coat miscellaneous metal parts and products, although enamels are more common. Coatings often are purchased at higher volume percent solids but are thinned before application (frequently with aromatic solvent blends). Alkyds are popular with industrial and farm machinery manufacturers. Most of the coatings contain several (up to 10) different solvents, including ketones, esters, alcohols, aliphatics, ethers, aromatics and terpenes.

Single or double coatings are applied in conveyored or batch operations. Spraying is usually employed for single coats. Flow and dip coating may be used when only one or two colors are applied. For two coat operations, primers are usually applied by flow or dip coating, and topcoats are almost always applied by spraying. Electrostatic spraying is common. Spray booths and areas are kept at a slight negative pressure to capture overspray.

A manual two coat operation may be used for large items like industrial and farm machinery. The coatings on large products are often air dried rather than oven baked, because the machinery, when completely assembled, includes heat sensitive materials and may be too large to be cured in an oven. Miscellaneous parts and products can be baked in single or multipass ovens at 150 to 230°C (300 to 450°F).

Emissions and Controls - Volatile organic compounds (VOC) are emitted from application and flashoff areas and the ovens of metal coating lines. See Figure 4.2.2.4-1. The composition of emissions varies among coating lines according to physical construction, coating method and type of coating applied, but distribution of emissions among individual operations has been assumed to be fairly constant, regardless of the type of coating line or the specific product coated, as Table 4.2.2.4-2 indicates. All solvent used can be considered potential emissions. Emissions can be calculated from the factors in Table 4.2.2.1-1 if coatings use is known, or from the factors in Table 4.2.2.4-2 if only a general description of the plant is available. For emissions from the cleansing and pretreatment area, see Section 4.6, Solvent Degreasing.

When powder coatings, which contain almost no VOC, are applied to some metal products as a coating modification, emissions are greatly reduced. Powder coatings are applied as single coats on some large appliance interior parts and as topcoat for kitchen ranges. They are also used on metal bed and chair frames, shelving and stadium seating, and they have been applied as single coats on small appliances, small farm machinery, fabricated metal product parts and industrial machinery components. The usual application methods are manual or automatic electrostatic spray.

TABLE 4.2.2.4-1. ESTIMATED CONTROL TECHNOLOGY EFFICIENCIES FOR METAL COATING LINES[a]

Control Technology	Application			Organic Emissions Reduction (%)		
	Large appliances	Metal furniture	Miscellaneous	Large appliances	Metal furniture	Miscellaneous
Powder	Top, exterior or interior single coat	Top or single coat	Oven baked single coat or topcoat	95-99[b]	95-99[b]	95-98[c]
Waterborne (spray, dip, flowcoat)	All applications	Prime, top or single coat	Oven baked single coat, primer and topcoat; air dried primer and topcoat	70-90[b]	60-90[b]	60-90[c]
Waterborne (electrodeposition)	Prime or interior single coat	Prime or single coat	Oven baked single coat and primer	90-95[b]	90-95[b]	90-95[c]
Higher solids (spray)	Top or exterior single coat and sound deadener	Top or single coat	Oven baked single coat and topcoat; air dried primer and topcoat	60-80[b]	50-80[b]	50-80[c]
Carbon absorption	Prime, single or topcoat application and flashoff areas	Prime, top or single coat application and flashoff areas	Oven baked single coat, primer and topcoat application and flash-off areas; air dried primer and topcoat application and drying areas	90[d]	90[d]	90[d]
Incineration	Prime, top or or single coat ovens	Ovens	Ovens	90[d]	90[d]	90+[d]

[a]References 1-3.

[b]the base case against which these % reductions were calculated is a high organic solvent coating which contains 25 volume % solids and 75 volume % organic solvents. Transfer efficiencies for liquid coatings are assumed to be about 80% for spray and 90% for dip or flowcoat, for powders about 93%, and for electrodeposition, 99%.

[c]Figures reflect the range of reduction possible. Actual reduction achieved depends on compositions of the conventional coating originally used and replacement low organic solvent coating, on transfer efficiency, and on relative film thicknesses of the two coatings.

[d]Reduction is only across the control device and does not account for capture efficiency.

TABLE 4.2.2.4-2. EMISSION FACTORS FOR TYPICAL METAL COATING PLANTS[a]

EMISSION FACTOR RATING: B

Type of Plant	Production Rate	Emissions		Estimated Emissions (%)	
		Mg/yr	ton/yr	Application and Flashoff	Ovens
Large appliances					
Prime and topcoat spray	768,000 units/yr	315	347	80	20
Metal furniture[b]					
Single spray[c]	48×10^6 ft^2/yr	500	550	65 - 80	20 - 35
Single dip[d]	23×10^6 ft^2/yr	160	176	50 - 60	40 - 50
Miscellaneous metal[b]					
Conveyor single flow[d]	16×10^6 ft^2/yr	111	122	50 - 60	40 - 50
Conveyor dip	16×10^6 ft^2/yr	111	122	40 - 50	50 - 60
Conveyor single spray[e]	16×10^6 ft^2/yr	200	220	70 - 80	20 - 30
Conveyor two coat, flow and spray	16×10^6 ft^2/yr	311	342	60 - 70	30 - 40
Conveyor two coat, dip and spray	16×10^6 ft^2/yr	311	342	60 - 70	30 - 40
Conveyor two coat, spray	16×10^6 ft^2/yr	400	440	70 - 80	30 - 30
Manual two coat, spray and air dry	8.5×10^6 ft^2/yr	212	233	100	0

[a]References 1-4.

[b]Estimated from area coated, assumed dry coating thickness of 1 mil, coating of 75% solvent by volume and 25% solids by volume, appropriate transfer efficiency (TE), and solvent density of 0.88 kg/liter (7.36 lb/gal). The equation to be used is:

$$E\ (\text{tons/yr}) = 2.29 \times 10^{-6}\ \text{area coated}\ (ft^2)\ \frac{V}{100 - V}\ \frac{1}{TE}$$

or

$$E\ (\text{Mg/yr}) = 2.09 \times 10^{-6}\ \text{area coated}\ (ft^2)\ \frac{V}{100 - V}\ \frac{1}{TE}$$

where V = VOC as volume %.

[c]Transfer efficiency assumed to be 60%, presuming the coater uses manual electrostatic equipment.

[d]Flow and dip coat transfer efficiencies assumed to be 90%.

[e]Transfer efficiency assumed to be 50%, presuming the coater uses electrostatic equipment but coats a wide range of product sizes and configurations.

Improving transfer efficiency is a method of reducing emissions. One such technique is the electrostatic application of the coating, and another is dip coating with waterborne paint. For example, many makers of large appliances are now using electrodeposition to apply prime coats to exterior parts and single coats to interiors, because this technique increases corrosion protection and resistance to detergents. Electrodeposition of these waterborne coatings is also being used at several metal furniture coating plants and at some farm, commercial machinery and fabricated metal products facilities.

Automated electrostatic spraying is most efficient, but manual and conventional methods can be used, also. Roll coating is another option on some miscellaneous parts. Use of higher solids coatings is a practiced technique for reduction of VOC emissions.

Carbon adsorption is technically feasible for collecting emissions from prime, top and single coat applications and flashoff areas. However, the entrained sticky paint particles are a filtration problem, and adsorbers are not commonly used.

Incineration is used to reduce organic vapor emissions from baking ovens for large appliances, metal furniture and miscellaneous products, and it is an option for control of emissions from application and flashoff areas.

Table 4.2.2.4-1 gives estimated control efficiencies for large appliance, metal furniture and miscellaneous metal part and product coating lines, and Table 4.2.2.4-2 gives their emission factors.

References for Section 4.2.2.4

1. Control of Volatile Organic Emissions from Existing Stationary Sources, Volume III: Surface Coating of Metal Furniture, EPA-450/2-77-032, U. S. Environmental Protection Agency, Research Triangle Park, NC, December 1977.

2. Control of Volatile Organic Emissions from Existing Stationary Sources, Volume V: Surface Coating of Large Appliances, EPA-450/2-77-034, U. S. Environmental Protection Agency, Research Triangle Park, NC, December 1977.

3. Control of Volatile Organic Emissions from Existing Stationary Sources, Volume V: Surface Coating of Miscellaneous Metal Parts and Products, EPA-450/2-78-015, U. S. Environmental Protection Agency, Research Triangle Park, NC, June 1978.

4. G. T. Helms, "Appropriate Transfer Efficiencies for Metal Furniture and Large Appliance Coating", Memorandum, Office of Air Quality Planning and Standards, U. S. Environmental Protection Agency, Research Triangle Park, NC, November 28, 1980.

4.2.2.5 FLAT WOOD INTERIOR PANEL COATING

Process Description[1] - Finished flat wood construction products are interior panels made of hardwood plywoods (natural and lauan), particle board, and hardboard.

Fewer than 25 percent of the manufacturers of such flat wood products coat the products in their plants, and in some of the plants that do coat, only a small percentage of total production is coated. At present, most coating is done by toll coaters who receive panels from manufacturers and undercoat or finish them according to customer specifications and product requirements.

Some of the layers and coatings that can be factory applied to flat woods are filler, sealer, groove coat, primer, stain, basecoat, ink, and topcoat. Solvents used in organic base flat wood coatings are usually component mixtures, including methyl ethyl ketone, methyl isobutyl ketone, toluene, xylene, butyl acetates, propanol, ethanol, butanol, naphtha, methanol, amyl acetate, mineral spirits, SoCal I and II, glycols, and glycol ethers. Those most often used in waterborne coatings are glycol, glycol ethers, propanol and butanol.

Various forms of roll coating are the preferred techniques for applying coatings to flat woods. Coatings used for surface cover can be applied with a direct roller coater, and reverse roll coaters are generally used to apply fillers, forcing the filler into panel cracks and voids. Precision coating and printing (usually with offset gravure grain printers) are also forms of roll coating, and several types of curtain coating may be employed, also (usually for topcoat application). Various spray techniques and brush coating may be used, too.

Printed interior panelings are produced from plywoods with hardwood surfaces (primarily lauan) and from various wood composition panels, including hardboard and particle board. Finishing techniques are used to cover the original surface and to produce various decorative effects. Figure 4.2.2.5-1 is a flow diagram showing some, but not all, typical production line variations for printed interior paneling.

Groove coatings, applied in different ways and at different points in the coating procedure, are usually pigmented low resin solids reduced with water before use, therefore yielding few, if any, emissions. Fillers, usually applied by reverse roll coating, may be of various formulations: (1) polyester (which is ultraviolet cured), (2) water base, (3) lacquer base, (4) polyurethane and (5) alkyd urea base. Water base fillers are in common use on printed paneling lines.

Sealers may be of water or solvent base, usually applied by airless spray or direct roll coating, respectively. Basecoats, which are usually direct roll coated, generally are of lacquer, synthetic, vinyl, modified alkyd urea, catalyzed vinyl, or water base.

Inks are applied by an offset gravure printing operation similar to direct roll coating. Most lauan printing inks are pigments dispersed in alkyd resin, with some nitrocellulose added for better wipe and printability. Water base

inks have a good future for clarity, cost and environmental reasons. After printing, a board goes through one or two direct or precision roll coaters for application of the clear protective topcoat. Some topcoats are synthetic, prepared from solvent soluble alkyd or polyester resins, urea formaldehyde cross linkings, resins, and solvents.

Natural hardwood plywood panels are coated with transparent or clear finishes to enhance and protect their face ply of hardwood veneer. Typical production lines are similar to those for printed interior paneling, except that a primer sealer is applied to the filled panel, usually by direct roll coating. The panel is then embossed and "valley printed" to give a "distressed" or antique appearance. No basecoat is required. A sealer is also applied after printing but before application of the topcoat, which may be curtain coated, although direct roll coating remains the usual technique.

Emissions and Controls[1-2] - Emissions of volatile organic compounds (VOC) at flat wood coating plants occur primarily from reverse roll coating of filler, direct roll coating of sealer and basecoat, printing of wood grain patterns, direct roll or curtain coating of topcoat(s), and oven drying after one or more of those operations (see Figure 4.2.2.5-1). All solvent used and not recovered can be considered potential emissions. Emissions can be calculated from the factors in Table 4.2.2.1-1, if the coating use is known. Emissions for interior printed panels can be estimated from the factors in Table 4.2.2.5-1, if the area of coated panels is known.

Waterborne coatings are increasingly used to reduce emissions. They can be applied to almost all flat wood except redwood and, possibly, cedar. The major use of waterborne flat wood coatings is in the filler and basecoat applied to printed interior paneling. Limited use has been made of waterborne materials for inks, groove coats, and topcoats with printed paneling, and for inks and groove coats with natural hardwood panels.

Ultraviolet curing systems are applicable to clear or semitransparent fillers, topcoats on particle board coating lines, and specialty coating operations. Polyester, acrylic, urethane and alkyd coatings can be cured by this method.

Afterburners can be used to control VOC emissions from baking ovens, and there would seem to be ample recovered heat to use. Extremely few flat wood coating operations have afterburners as addon controls, though, despite the fact that they are a viable control option for reducing emissions where product requirements restrict the use of other control techniques.

Carbon adsorption is technically feasible, especially for specific applications (e. g., redwood surface treatment), but the use of multicomponent solvents and different coating formulations in several steps along the coating line has thus far precluded its use to control flat wood coating emissions and to reclaim solvents. The use of low solvent coatings to fill pores and to seal wood has been demonstrated.

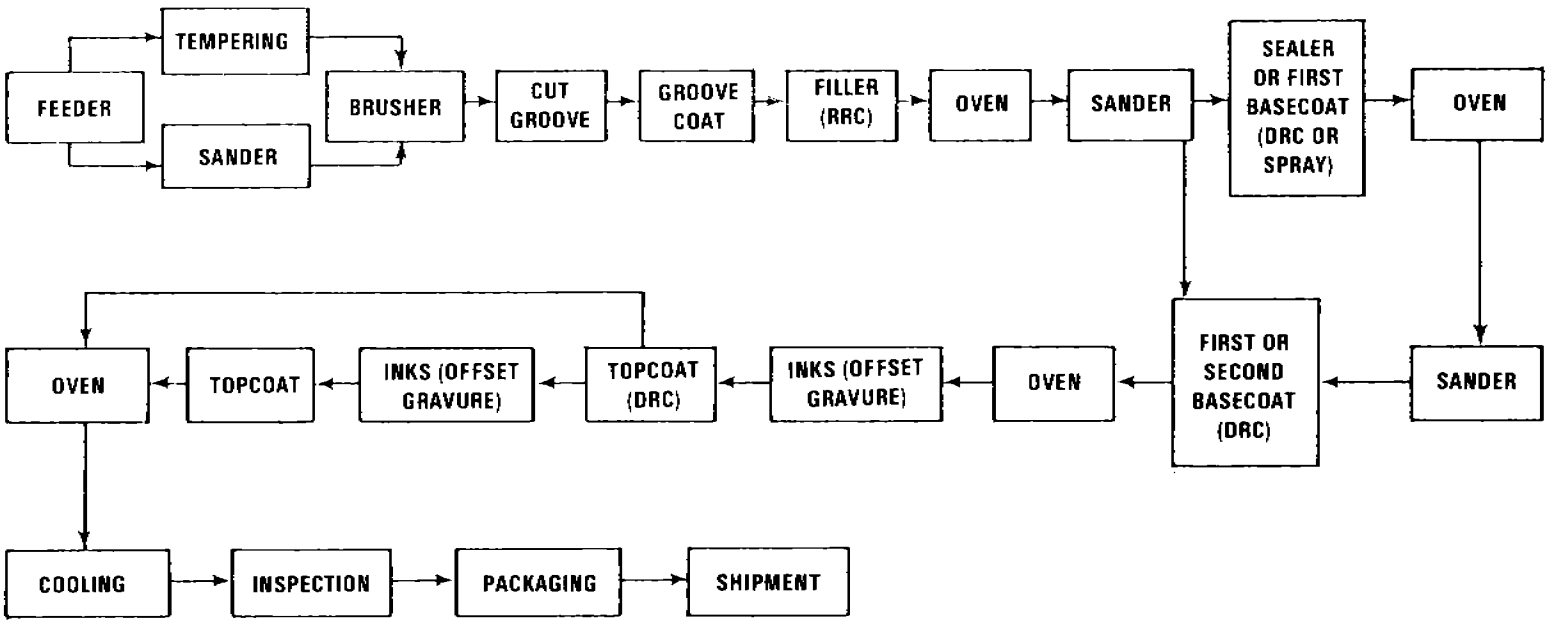

Figure 4.2.2.5-1. Flat Wood interior panel coating line emission points.[14]

RRC - REVERSE ROLL COATING
DRC - DIRECT ROLL COATING

TABLE 4.2.2.5-1. VOC EMISSION FACTORS FOR INTERIOR PRINTED PANELS[a]

EMISSION FACTOR RATING: B

Paint Category	Coverage[b]				Uncontrolled VOC Emissions					
	liter/100m^2		gal/1,000 ft^2		kg/100m^2 coated			lb/1,000 ft^2 coated		
	Water borne	Conventional	Water borne	Conventional	Water borne	Conventional	Ultraviolet[c]	Water borne	Conventional	Ultraviolet[c]
Filler	6.5	6.9	1.6	1.7	0.3	3.0	Neg	0.6	6.1	Neg
Sealer	1.4	1.2	0.35	0.3	0.2	0.5	0	0.4	1.1	0
Basecoat	2.6	3.2	3.2	0.65	0.8	0.2	0.24	0.5	5.0	0.5
Ink	0.4	0.4	0.1	0.1	0.1	0.3	0.10	0.2	0.6	0.2
Topcoat	2.6	2.8	0.65	0.7	0.4	1.8	Neg	0.8	3.7	Neg
TOTAL	13.5	14.5	3.4	3.6	1.2	8.0	0.4	2.5	16.5	0.8

[a]Reference 1. Organics are all nonmethane. Neg = negligible.
[b]Reference 3. From Abitibi Corp., Cucamonga, CA. Adjustments between water and conventional paints made using typical nonvolatiles content.
[c]UV line uses no sealer, uses waterborne basecoat and ink. Total adjusted to cover potential emissions from UV coatings.

References for Section 4.2.2.5

1. Control of Volatile Organic Emissions from Existing Stationary Sources, Volume VII: Factory Surface Coating of Flat Wood Interior Paneling, EPA-450/2-78-032, U. S. Environmental Protection Agency, Research Triangle Park, NC, June 1978.

2. Air Pollution Control Technology Applicable to 26 Sources of Volatile Organic Compounds, Office of Air Quality Planning and Standards, U. S. Environmental Protection Agency, Research Triangle Park, NC, May 27, 1977. Unpublished.

3. Products Finishing, 41(6A):4-54, March 1977.

4.2.2.6 PAPER COATING

Process Description[1-2] - Paper is coated for various decorative and functional purposes with waterborne, organic solventborne, or solvent free extruded materials. Paper coating is not to be confused with printing operations, which use contrast coatings that must show a difference in brightness from the paper to be visible. Coating operations are the application of a uniform layer or coating across a substrate. Printing results in an image or design on the substrate.

Waterborne coatings improve printability and gloss but cannot compete with organic solventborne coatings in resistance to weather, scuff and chemicals. Solventborne coatings, as an added advantage, permit a wide range of surface textures. Most solventborne coating is done by paper converting companies that buy paper from mills and apply coatings to produce a final product. Among the many products that are coated with solventborne materials are adhesive tapes and labels, decorated paper, book covers, zinc oxide coated office copier paper, carbon paper, typewriter ribbons, and photographic film.

Organic solvent formulations generally used are made up of film forming materials, plasticizers, pigments and solvents. The main classes of film formers used in paper coating are cellulose derivatives (usually nitrocellulose) and vinyl resins (usually the copolymer of vinyl chloride and vinyl acetate). Three common plasticizers are dioctyl phthalate, tricresyl phosphate and castor oil. The major solvents used are toluene, xylene, methyl ethyl ketone, isopropyl alcohol, methanol, acetone, and ethanol. Although a single solvent is frequently used, a mixture is often necessary to obtain the optimum drying rate, flexibility, toughness and abrasion resistance.

A variety of low solvent coatings, with negligible emissions, has been developed for some uses to form organic resin films equal to those of conventional solventborne coatings. They can be applied up to 1/8 inch thick (usually by reverse roller coating) to products like artificial leather goods, book covers and carbon paper. Smooth hot melt finishes can be applied over rough textured paper by heated gravure or roll coaters at temperatures from 65 to 230°C (150 to 450°F).

Plastic extrusion coating is a type of hot melt coating in which a molten thermoplastic sheet (usually low or medium density polyethylene) is extruded from a slotted die at temperatures of up to 315°C (600°F). The substrate and the molten plastic coat are united by pressure between a rubber roll and a chill roll which solidifies the plastic. Many products, such as the polyethylene coated milk carton, are coated with solvent free extrusion coatings.

Figure 4.2.2.6-1 shows a typical paper coating line that uses organic solventborne formulations. The application device is usually a reverse roller, a knife or a rotogravure printer. Knife coaters can apply solutions of much higher viscosity than roll coaters can, thus emitting less solvent per pound of solids applied. The gravure printer can print patterns or can coat a solid sheet of color on a paper web.

Ovens may be divided into from two to five temperature zones. The first zone is usally at about 43°C (110°F), and other zones have progressively higher temperatures to cure the coating after most solvent has evaporated. The typical curing temperature is 120°C (250°F), and ovens are generally limited to 200°C (400°F) to avoid damage to the paper. Natural gas is the fuel most often used in direct fired ovens, but fuel oil is sometimes used. Some of the heavier grades of fuel oil can create problems, because SO and particulate may contaminate the paper coating. Distillate fuel oil usually can be used satisfactorily. Steam produced from burning solvent retrieved from an adsorber or vented to an incinerator may also be used to heat curing ovens.

Emissions and Controls[2] - The main emission points from paper coating lines are the coating applicator and the oven (see Figure 4.2.2.6-1). In a typical paper coating plant, about 70 percent of all solvents used are emitted from the coating lines, with most coming from the first zone of the oven. The other 30 percent are emitted from solvent transfer, storage and mixing operations and can be reduced through good housekeeping practices. All solvent used and not recovered or destroyed can be considered potential emissions.

TABLE 4.2.2.6-1. CONTROL EFFICIENCIES FOR PAPER COATING LINES[a]

Affected facility	Control method	Efficiency (%)
Coating line	Incineration	95
	Carbon adsorption	90+
	Low solvent coating	80 - 99[b]

[a]Reference 2.
[b]Based on comparison with a conventional coating containing 35% solids and 65% organic solvent, by volume.

Volatile organic compounds (VOC) emissions from individual paper coating plants vary with size and number of coating lines, line construction, coating formulation, and substrate composition, so each must be evaluated individually. VOC emissions can be estimated from the factors in Table 4.2.2.1-1, if coating use is known and sufficient information on coating composition is available. Since many paper coating formulas are proprietary, it may be necessary to have information on the total solvent used and to assume that, unless a control device is used, essentially all solvent is emitted. Rarely would as much as 5 percent be retained in the product.

Almost all solvent emissions from the coating lines can be collected and sent to a control device. Thermal incinerators have been retrofitted to a large number of oven exhausts, with primary and even secondary heat recovery systems heating the ovens. Carbon adsorption is most easily adaptable to lines which use single solvent coating. If solvent mixtures are collected by adsorbers, they usually must be distilled for reuse.

Although available for some products, low solvent coatings are not yet available for all paper coating operations. The nature of the products, such

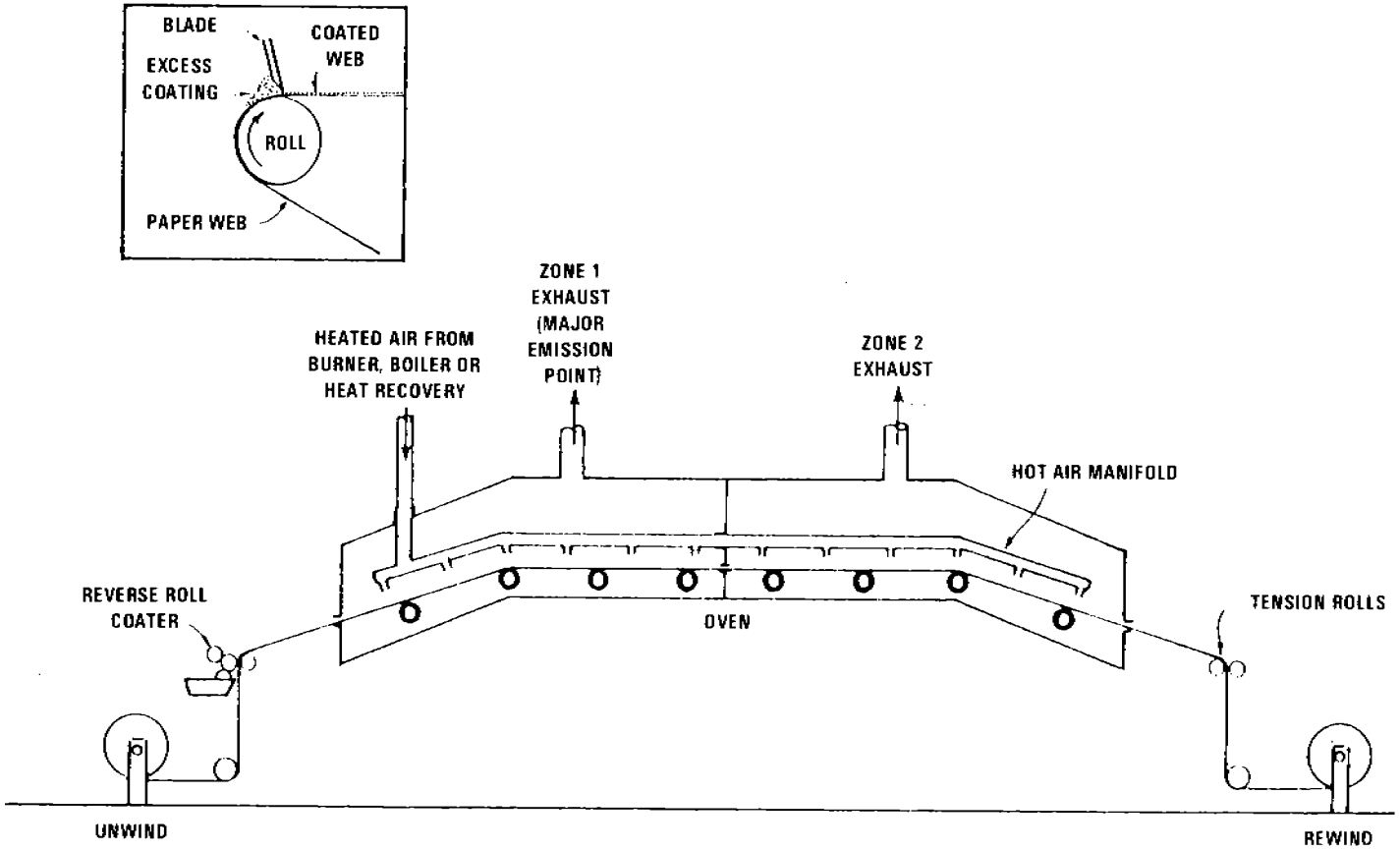

Figure 4.2.2.6.-1. Paper coating line emission points. [7]

as some types of photographic film, may preclude development of a low solvent option. Furthermore, the more complex the mixture of organic solvents in the coating, the more difficult and expensive to reclaim them for reuse with a carbon adsorption system.

References for Section 4.2.2.6

1. T. W. Hughes, et al., Source Assessment: Prioritization of Air Pollution from Industrial Surface Coating Operations, EPA-650/2-75-019a, U. S. Environmental Protection Agency, Research Triangle Park, NC, February 1975.

2. Control of Volatile Organic Emissions from Existing Stationary Sources, Volume II: Surface Coating of Cans, Coils, Paper Fabrics, Automobiles, and Light Duty Trucks, EPA-450/2-77-008, U. S. Environmental Protection Agency, Research Triangle Park, NC, May 1977.

4.2.2.7 FABRIC COATING[1-3]

Process Description - Fabric coating imparts to a fabric substrate properties such as strength, stability, water or acid repellence, or appearance. Fabric coating is the uniform application of an elastomeric or thermoplastic polymer solution, or a vinyl plastisol or organosol, across all of at least one side of a supporting fabric surface or substrate. Coatings are applied by blade, roll coater, reverse roll coater, and in some instances, by rotogravure coater. Fabric coating should not be confused with vinyl printing and top coating, which occur almost exclusively on rotogravure equipment. Textile printing also should not be considered a fabric coating process.

Products usually fabric coated are rainwear, tents, tarpaulins, substrates for industrial and electrical tape, tire cord, seals, and gaskets. The industry is mostly small to medium size plants, many of which are toll coaters, rather than specialists in their own product lines.

Figure 4.2.2.7-1 is of a typical fabric coating operation. If the fabric is to be coated with rubber, the rubber is milled with pigments, curing agents and fillers before being dissolved (mixed) in a suitable solvent. When other than rubber coatings are used, milling is rarely necessary.

Emissions and Controls[1] - The volatile organic compounds (VOC) emissions in a fabric coating plant originate at the mixer, the coating applicator and the oven (see Figure 4.2.2.7-1). Emissions from these three areas are from 10 to 25 percent, 20 to 30 percent and 40 to 65 percent, respectively. Fugitive losses, amounting to a few percent, escape during solvent transfer, storage tank breathing, agitation of mixing tanks, waste solvent disposal, various stages of cleanup, and evaporation from the coated fabric after it leaves the line.

The most accurate method of estimating VOC emissions from a fabric coating plant is to obtain purchase or use records of all solvents in a specified time period, add to that the amount of solvent contained in purchased coating solutions, and subtract any stockpiled solvent, such as cleanup solvent, that is recovered and disposed of in a nonpolluting manner. Emissions from the actual coating line, without any solvent recovery, can be estimated from the factors in Section 4.2.2.1, General Industrial Surface Coating, if coating use is known and sufficient information on coating composition is available. Because many fabric coatings are proprietary, it may be necessary for the user to supply information on the total solvent used and to assume that, unless a control device is used, all solvent is emitted. To calculate total plant emissions, the coatings mixing losses must be accounted. These losses can be estimated from the printline losses by using the relative split of plant emissions between the mixing area and the printline. For example,

$$\text{Emissions}_{\text{mixing}} = \text{Emissions}_{\text{printline}} \left(\frac{\text{10\% loss from mixing}}{\text{85\% loss from printline}}\right)$$

Incineration is probably the best way to control coating application and curing emissions on coating lines using a variety of coating formulations. Primary and secondary heat recovery are likely to be used to help reduce the fuel requirements of the coating process and, therefore, to increase the economy

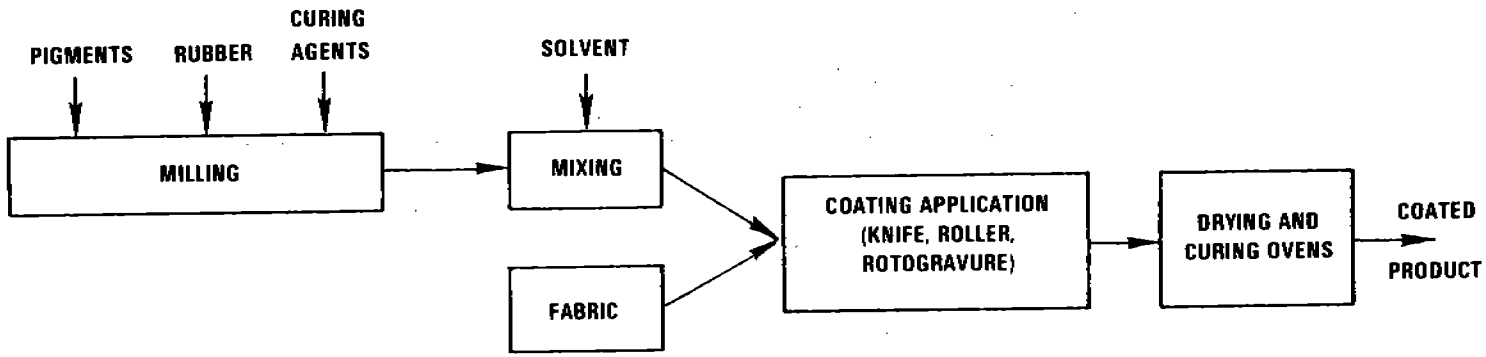

Figure 4.2.2.7-1. Fabric coating plant emission points.[7]

of incineration. As with other surface coating operations, carbon adsorption is most easily accomplished by sources using a single solvent that can be recovered for reuse. Mixed solvent recovery is, however, in use in other web coating processes. Fugitive emissions controls include tight covers for open tanks, collection hoods for cleanup areas, and closed containers for storage of solvent wiping cloths. Where high solids or waterborne coatings have been developed to replace conventional coatings, their use may preclude the need for a control device.

References for Section 4.2.2.7

1. Control of Volatile Organic Emissions from Existing Stationary Sources, Volume II: Surface Coating of Cans, Coils, Paper Fabrics, Automobiles, and Light Duty Trucks, EPA-450/2-77-008, U. S. Environmental Protection Agency, Research Triangle Park, NC, May 1977.

2. B. H. Carpenter and G. K. Hilliard, Environmental Aspects of Chemical Use in Printing Operations, EPA-560/1-75-005, U. S. Environmental Protection Agency, Washington, DC, January 1976.

3. J. C. Berry, "Fabric Printing Definition", Memorandum, Office of Air Quality Planning and Standards, U. S. Environmental Protection Agency, Research Triangle Park, NC, August 25, 1980.

4.2.2.8 AUTOMOBILE AND LIGHT DUTY TRUCK SURFACE COATING OPERATIONS[1-4]

General - Surface coating of an automobile body is a multistep operation carried out on an assembly line conveyor system. Such a line operates at a speed of 3 to 8 meters (9 to 25 feet) per minute and usually produces 30 to 70 units per hour. An assembly plant may operate up to two 8 hour production shifts per day, with a third shift used for cleanup and maintanance. Plants may stop production for a vacation of one and a half weeks at Christmas through New Year's Day and may stop for several weeks in Summer for model changeover.

Although finishing processes vary from plant to plant, they have some common characteristics. Major steps of such processes are:

- Solvent* wipe
- Phosphating treatment
- Application of prime coat
- Curing of prime coat
- Application of guide coat
- Curing of guide coat
- Application of topcoat(s)
- Curing of topcoat(s)
- Final repair operations

A general diagram of these consecutive steps is presented in Figure 4.2.2.8-1. Application of a coating takes place in a dip tank or spray booth, and curing occurs in the flashoff area and bake oven. The typical structures for application and curing are contiguous, to prevent exposure of the wet body to the ambient environment before the coating is cured.

The automobile body is assembled from a number of welded metal sections. The body and the parts to be coated all pass through the same metal preparation process.

First, surfaces are wiped with solvent to eliminate traces of oil and grease. Second, a phosphating process prepares surfaces for the primer application. Since iron and steel rust readily, phosphate treatment is necessary to retard such. Phosphating also improves the adhesion of the primer and the metal. The phosphating process occurs in a multistage washer, with detergent cleaning, rinsing, and coating of the metal surface with zinc phosphate. The parts and bodies pass through a water spray cooling process. If solventborne primer is to be applied, they are then oven dried.

A primer is applied to protect the metal surface from corrosion and to assure good adhesion of subsequent coatings. Approximately half of all assembly plants use solventborne primers with a combination of manual and automatic spray application. The rest use waterborne primers. As new plants are constructed and exiting plants modernized, the use of waterborne primers is expected to increase.

---

*The term "solvent" here means organic solvent.

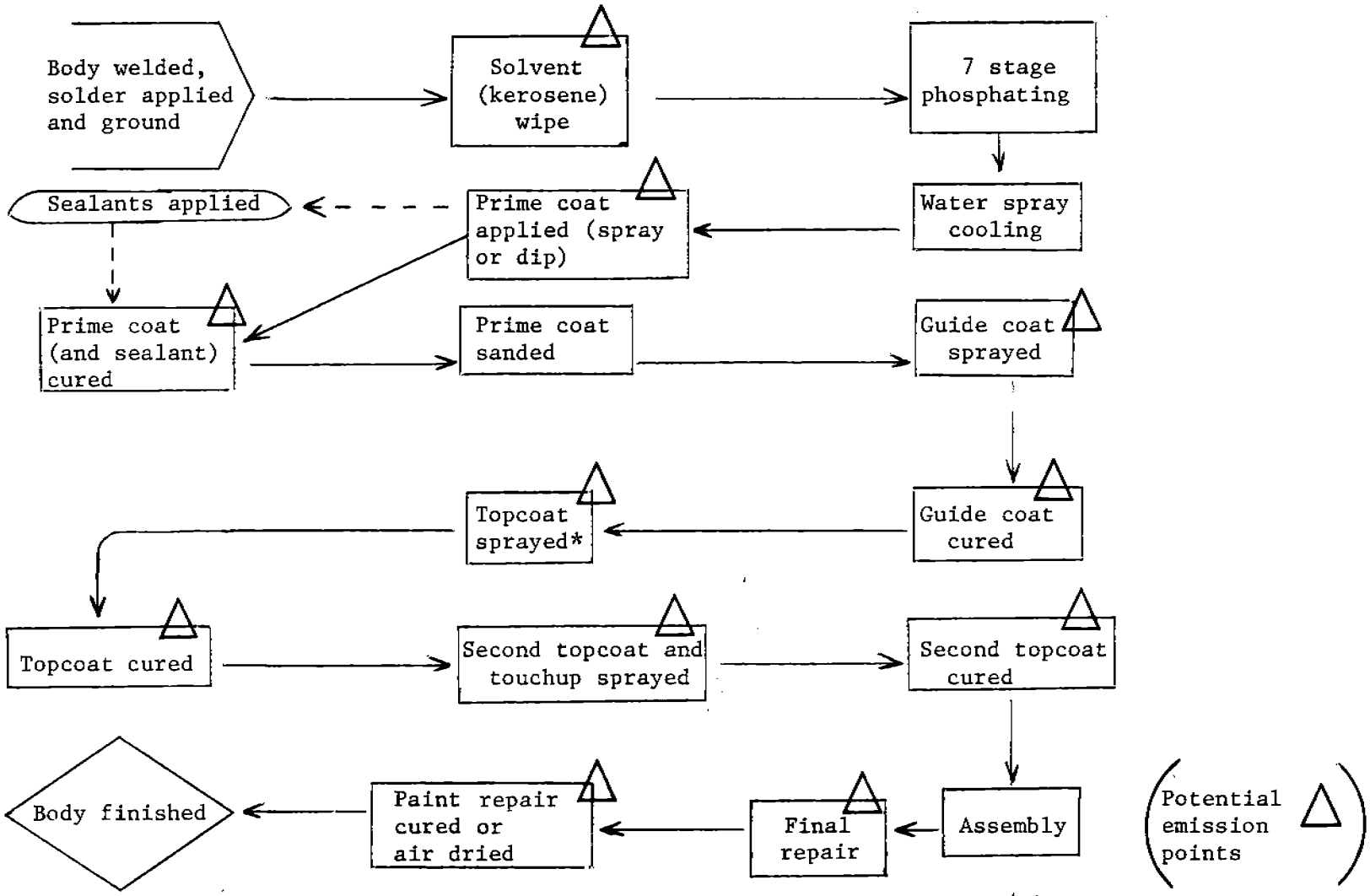

*To get sufficient film build, for two colors or a base coat/clear coat, there may be multiple topcoats.

Figure 4.2.2.8-1. Typical automobile and light duty truck surface coating line.

Waterborne primer is most often applied in an electrodeposition (EDP) bath. The composition of the bath is about 5 to 15 volume percent solids, 2 to 10 percent solvent and the rest water. The solvents used are typically organic compounds of higher molecular weight and low volatility, like ethylene glycol monobutyl ether.

When EDP is used, a guide coat (also called a primer surfacer) is applied between the primer and the topcoat to build film thickness, to fill in surface imperfections and to permit sanding between the primer and topcoat. Guide coats are applied by a combination of manual and automatic spraying and can be solventborne or waterborne. Powder guide coat is used at one light duty truck plant.

The topcoat provides the variety of colors and surface appearance to meet customer demand. Topcoats are applied in one to three steps to assure sufficient coating thickness. An oven bake may follow each topcoat application, or the coating may be applied wet on wet. At a minimum, the final topcoat is baked in a high temperature oven.

Topcoats in the automobile industry traditionally have been solventborne lacquers and enamels. Recent trends have been to higher solids content. Powder topcoats have been tested at several plants.

The current trend in the industry is toward base coat/clear coat (BC/CC) topcoating systems, consisting of a relatively thin application of highly pigmented metallic base coat followed by a thicker clear coat. These BC/CC topcoats have more appealing appearance than do single coat metallic topcoats, and competitive pressures are expected to increase their use by U. S. manufacturers.

The VOC content of most BC/CC coatings in use today is higher than that of conventional enamel topcoats. Development and testing of lower VOC content (higher solids) BC/CC coatings are being done, however, by automobile manufacturers and coating suppliers.

Following the application of the topcoat, the body goes to the trim operation area, where vehicle assembly is completed. The final step of the surface coating operation is generally the final repair process, in which damaged coating is repaired in a spray booth and is air dried or baked in a low temperature oven to prevent damage of heat sensitive plastic parts added in the trim operation area.

Emissions and Controls - Volatile organic compounds (VOC) are the major pollutants from surface coating operations. Potential VOC emitting operations are shown in Figure 4.2.2.8-1. The application and curing of the prime coat, guide coat and topcoat account for 50 to 80 percent of the VOC emitted from assembly plants. Final topcoat repair, cleanup, and miscellaneous sources such as the coating of small component parts and application of sealants, account for the remaining 20 percent. Approximately 75 to 90 percent of the VOC emitted during the application and curing process is emitted from the spray booth and flashoff area, and 10 to 25 percent from the bake oven. This emissions split is heavily dependent on the types of

TABLE 4.2.2.8-1. EMISSION FACTORS FOR AUTOMOBILE AND LIGHT DUTY TRUCK SURFACE COATING OPERATIONS[a]

EMISSION FACTOR RATING: C

Coating	Automobile kg(lb) of VOC per vehicle	Automobile kg(lb) of VOC per hour[b]	Light Duty Truck kg(lb) of VOC per vehicle	Light Duty Truck kg(lb) of VOC per hour[c]
Prime Coat				
Solventborne spray	6.61 (14.54)	363 (799)	19.27 (42.39)	732 (1611)
Cathodic electrodeposition	.21 (.45)	12 (25)	.27 (.58)	10 (22)
Guide Coat				
Solventborne spray	1.89 (4.16)	104 229	6.38 (14.04)	243 (534)
Waterborne spray	.68 (1.50)	38 (83)	2.3 (5.06)	87 (192)
Topcoat				
Lacquer	21.96 (48.31)	1208 (2657)	NA	NA
Dispersion lacquer	14.50 (31.90)	798 (1755)	NA	NA
Enamel	7.08 (15.58)	390 (857)	17.71 (38.96)	673 (1480)
Basecoat/clear coat	6.05 (13.32)	333 (732)	18.91 (41.59)	719 (1581)
Waterborne	2.25 (4.95)	124 (273)	7.03 (15.47)	267 (588)

[a]All nonmethane VOC. Factors are calculated using the following equation and the typical values of parameters presented in Tables 4.2.2.8-2 and 4.2.2.8-3. NA = Not applicable.

$$E_v = \frac{A_v \, c_1 \, T_f \, V_c \, c_2}{S_c e_T}$$

Where: E_v = emission factor for VOC, mass per vehicle (lb/vehicle) (exclusive of any addon control devices)

A_v = area coated per vehicle (ft^2/vehicle)

c_1 = conversion factor: 1 ft/12,000 mil

T_f = thickness of the dry coating film (mil)

V_c = VOC (organic solvent) content of coating as applied, less water (lb VOC/gal coating, less water)

c_2 = conversion factor: 7.48 gallons/ft^3

S_c = solids in coating as applied, volume fraction (gal solids/gal coating)

e_T = transfer efficiency fraction (fraction of total coating solids used which remains on coated parts)

Example: The VOC emissions per automobile from a cathodic electrodeposited prime coat.

$$E_v \text{ mass of VOC} = \frac{(850\ ft^2)(1/12000)(0.6\ mil)(1.2\ lb/gal\text{-}H_2O)}{(.84\ gal/gal)(1.00)}$$

$$= .45 \text{ lb VOC/vehicle } (.21 \text{ kg VOC/vehicle})$$

[b]Base on an average line speed of 55 automobiles/hr.
[c]Based on an average line speed of 38 light duty trucks/hr.

solvents used and on transfer efficiency. With improved transfer efficiencies and the newer coatings, it is expected that the percent of VOC emitted from the spray booth and the flashoff area will decrease, and the percent of VOC emitted from the bake oven will remain fairly constant. Higher solids coatings, with their slower solvents, will tend to have a greater fraction of emissions from the bake oven.

Several factors affect the mass of VOC emitted per vehicle from surface coating operations in the automotive industry. Among these are:

VOC content of coatings (pounds of coating, less water)
Volume solids content of coating
Area coated per vehicle
Film thickness
Transfer efficiency

The greater the quantity of VOC in the coating composition, the greater will be the emissions. Lacquers having 12 to 18 volume percent solids are higher in VOC than enamels having 24 to 33 volume percent solids. Emissions are also influenced by the area of the parts being coated, the coating thickness, the configuration of the part and the application technique.

The transfer efficiency (fraction of the solids in the total consumed coating which remains on the part) varies with the type of application technique. Transfer efficiency for typical air atomized spraying ranges from 30 to 50 percent. The range for electrostatic spraying, an application method that uses an electrical potential to increase transfer efficiency of the coating solids, is from 60 to 95 percent. Both air atomized and electrostatic spray equipment may be used in the same spray booth.

Several types of control techniques are available to reduce VOC emissions from automobile and light duty truck surface coating operations. These methods can be broadly categorized as either control devices or new coating and application systems. Control devices reduce emissions by either recovering or destroying VOC before it is discharged into the ambient air. Such techniques include thermal and catalytic incinerators on bake ovens, and carbon adsorbers on spray booths. New coatings with relatively low VOC levels can be used in place of high VOC content coatings. Such coating systems include electrodeposition of waterborne prime coatings, and for top coats, air spray of waterborne enamels and air or electrostatic spray of high solids, solventborne enamels and powder coatings. Improvements in the transfer efficiency decrease the amount of coating which must be used to achieve a given film thickness, thereby reducing emissions of VOC to the ambient air.

Calculation of VOC emissions for representative conditions provides the emission factors in Table 4.2.2.8-1. The factors were calculated with the typical value of parameters presented in Tables 4.2.2.8-2 and 4.2.2.8-3. The values for the various parameters for automobiles and light duty trucks represent average conditions existing in the automobile and light duty truck industry in 1980. A more accurate estimate of VOC emissions can be calculated with the equation in Table 4.2.2.8-1 and with site-specific values for the various parameters.

TABLE 4.2.2.8-2. PARAMETERS FOR THE AUTOMOBILE SURFACE COATING INDUSTRY[a]

Application	Area Coated per vehicle, ft^2	Film Thickness, mil	VOC Content, lb/gal-H_2O	Volume Fraction Solids, gal/gal-H_2O	Transfer Efficiency, %
Prime Coat					
Solventborne spray	450	0.8	5.7	0.22	40
	(220-570)	(0.3-2.5)	(4.2-6.0)	(.20-.35)	(35-50)
Cathodic electrodeposition	850	0.6	1.2	0.84	100
	(660-1060)	(0.5-0.8)	(1.2-1.5)	(.84-.87)	(85-100)
Guide Coat					
Solventborne spray	200	0.8	5.0	0.30	40
	(170-280)	(0.5-1.5)	(3.0-5.6)	(.25-.55)	(35-65)
Waterborne spray	200	0.8	2.8	0.62	30
	(170-280)	(0.5-2.0)	(2.6-3.0)	(.60-.65)	(25-40)
Topcoat					
Solventborne spray					
Lacquer	240	2.5	6.2	0.12	40
	(170-280)	(1.0-3.0)	(5.8-6.6)	(.10-.13)	(30-65)
Dispersion lacquer	240	2.5	5.8	0.17	40
	(170-280)	(1.0-3.0)	(4.9-5.8)	(.17-.27)	(30-65)
Enamel	240	2.5	5.0	0.30	40
	(170-280)	(1.0-3.0)	(3.0-5.6)	(.25-.55)	(30-65)
Base coat/clear coat[b]	240	2.5	4.7	0.33	40
Base coat	240	1.0	5.6	0.20	40
	(170-280)	(0.8-1.0)	(3.4-6.4)	(.13-.48)	(30-50)
Clear coat	240	1.5	4.0	0.42	40
	(170-280)	(1.2-1.5)	(3.0-5.1)	(.30-.54)	(30-65)
Waterborne spray	240	2.2	2.8	0.62	30
	(170-280)	(1.0-2.5)	(2.6-3.0)	(.60-.65)	(25-40)

[a]All values for coatings as applied, except for VOC content and volume fraction solids which are for coatings as applied minus water. Ranges in parentheses. Low VOC content (high solids) base coat/clear coats are still undergoing testing and development.
[b]Composite of base coat and clear coat.

TABLE 4.2.2.8-3. PARAMETERS FOR THE LIGHT DUTY TRUCK SURFACE COATING INDUSTRY[a]

Application	Area Coated per vehicle, ft^2	Film Thickness, mil	VOC Content, lb/gal-H_2O	Volume Fraction Solids, gal/gal-H_2O	Transfer Efficiency, %
Prime Coat					
Solventborne spray	875	1.2	5.7	0.22	40
	(300-1000)	(0.7-1.7)	(4.2-6.0)	(0.20-.35)	(35-50)
Cathodic electrodeposition	1100	0.6	1.2	0.84	100
	(850-1250)	(0.5-0.8)	(1.2-1.5)	(.84-.87)	(85-100)
Guide Coat					
Solventborne spray	675	0.8	5.0	0.30	40
	(180-740)	(0.7-1.7)	(3.0-5.6)	(.25-.55)	(35-65)
Waterborne spray	675	0.8	2.8	0.62	30
	(180-740)	(0.5-2.0)	(2.6-3.0)	(.60-.65)	(25-40)
Topcoat					
Solventborne spray					
Enamel	750	2.0	5.0	0.30	40
	(300-900)	(1.0-2.5)	(3.0-5.6)	(.25-.55)	(30-65)
Base coat/clear coat[b]	750	2.5	4.7	0.33	40
Base coat	750	1.0	5.6	0.20	40
	(300-900)	(0.8-1.0)	(3.4-6.4)	(.13-.48)	(30-50)
Clear coat	750	1.5	4.0	0.42	40
	(300-900)	(1.2-1.5)	(3.0-5.1)	(.30-.54)	(30-65)
Waterborne spray	750	2.2	2.8	0.62	30
	(300-900)	(1.0-2.5)	(2.6-3.0)	(.60-.65)	(25-40)

[a]All values are for coatings as applied, except for VOC content and volume fraction solids which are for coatings as applied minus water. Ranges in parenthesis. Low VOC content (high solids) base coat/clear coats are still undergoing testing and development.
[b]Composite of typical base coat and clear coat.

Emission factors are not available for final topcoat repair, cleanup, coating of small parts and application of sealants.

References for Section 4.2.2.8

1. Control of Volatile Organic Emissions from Existing Stationary Sources - Volume II: Surface Coating of Cans, Coils, Paper Fabrics, Automobiles, and Light Duty Trucks, EPA-450/2-77-008, U.S. Environmental Protection Agency, Research Triangle Park, NC, May 1977.

2. Study To Determine Capabilities To Meet Federal EPA Guidelines for Volatile Organic Compound Emissions, General Motors Corporation, Detroit, MI, November 1978.

3. Automobile and Light Duty Truck Surface Coating Operations - Background Information for Proposed Standards, EPA-450/3-79-030, U.S. Environmental Protection Agency, Research Triangle Park, NC, September 1979.

4. Written communication from D. A. Frank, General Motors Corporation, Warren, MI, to H. J. Modetz, Acurex Corporation, Morrisville, NC, April 14, 1981.

4.2.2.9 PRESSURE SENSITIVE TAPES AND LABELS

General[1-5] - The coating of pressure sensitive tapes and labels (PSTL) is an operation in which some backing material (paper, cloth or film) is coated to create a tape or label product that sticks on contact. The term "pressure sensitive" indicates that the adhesive bond is formed on contact, without wetting, heating or adding a curing agent.

The products manufactured by the PSTL surface coating industry may have several different types of coatings applied to them. The two primary types of coatings are adhesives and releases. Adhesive coating is a necessary step in the manufacture of almost all PSTL products. It is generally the heaviest coating (typically 0.051 kg/m^2, or 0.011 lb/ft^2) and therefore has the highest level of solvent emissions (generally 85 to 95 percent of total line emissions).

Release coatings are applied to the backside of tape or to the mounting paper of labels. The function of release coating is to allow smooth and easy unrolling of a tape or removal of a label from mounting paper. Release coatings are applied in a very thin coat (typically 0.00081 kg/m^2, or 0.00017 lb/ft^2). This thin coating produces less emissions than does a comparable size adhesive coating line.

Five basic coating processes can be used to apply both adhesive and release coatings:

- solvent base coating
- waterborne (emulsion) coating
- 100 percent solids (hot melt) coating
- calender coating
- prepolymer coating

A solvent base coating process is used to produce 80 to 85 percent of all products in the PSTL industry, and essentially all of the solvent emissions from the industry result from solvent base coating. Because of its broad application and significant emissions, solvent base coating of PSTL products is discussed in greater detail.

Process Description[1-2,5] - Solvent base surface coating is conceptually a simple process. A continuous roll of backing material (called the web) is unrolled, coated, dried and rolled again. A typical solvent base coating line is shown in Figure 4.2.2.9-1. Large lines in this industry have typical web widths of 152 centimeters (60 in), while small lines are generally 48 centimeters (24 in). Line speeds vary substantially, from three to 305 meters per

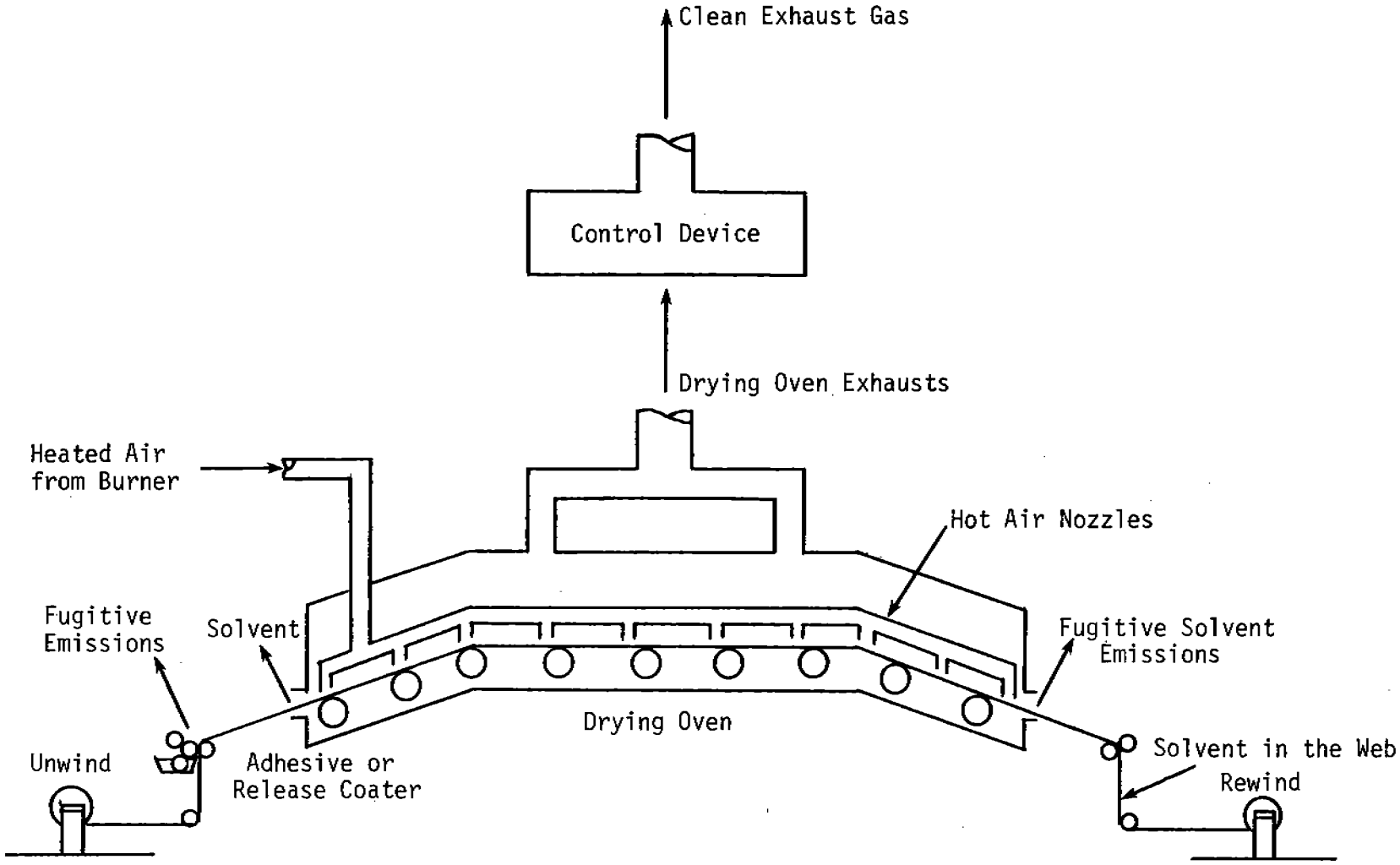

Figure 4.2.2.9-1. Diagram of a Pressure Sensitive Tape and Label Coating Line

minute (10 - 1000 ft/min). To initiate the coating process the continuous web material is unwound from its roll. It travels to a coating head, where the solvent base coating formulation is applied. These formulations have specified levels of solvent and coating solids by weight. Solvent base adhesive formulations contain approximately 67 weight percent solvent and 33 weight percent coating solids. Solvent base releases average about 95 weight percent solvent and 5 weight percent coating solids. Solvents used include toluene, xylene, heptane, hexane and methyl ethyl ketone. The coating solids portion of the formulations consists of elastomers (natural rubber, styrene-butadiene rubber, polyacrylates), tackifying resins (polyterpenes, rosins, petroleum hydrocarbon resins, asphalts), plasticizers (phthalate esters, polybutenes, mineral oil), and fillers (zinc oxide, silica, clay).

The order of application is generally release coat, primer coat (if any) and adhesive coat. A web must always have a release coat before the adhesive can be applied. Primer coats are not required on all products, generally being applied to improve the performance of the adhesive.

Three basic categories of coating heads are used in the PSTL industry. The type of coating head used has a great effect on the quality of the coated product, but only a minor effect on overall emissions. The first type operates by applying coating to the web and scraping excess off to a desired thickness. Examples of this type of coater are the knife coater, blade coater and metering rod coater. The second category of coating head meters on a specific amount of coating. Gravure and reverse roll coaters are the most common examples. The third category of coating head does not actually apply a surface coating, but rather it saturates the web backing. The most common example in this category is the dip and squeeze coater.

After solvent base coatings have been applied, the web moves into the drying oven where the solvents are evaporated from the web. The important characteristics of the drying oven operation are:

- source of heat
- temperature profile
- residence time
- allowable hydrocarbon concentration in the dryer
- oven air circulation

Two basic types of heating are used in conventional drying ovens, direct and indirect. Direct heating routes the hot combustion gases (blended with ambient air to the proper temperature) directly

into the drying zone. With indirect heating, the incoming oven air stream is heated in a heat exchanger with steam or hot combustion gases but does not physically mix with them. Direct fired ovens are more common in the PSTL industry because of their higher thermal efficiency. Indirect heated ovens are less energy efficient in both the production of steam and the heat transfer in the exchanger.

Drying oven temperature control is an important consideration in PSTL production. The oven temperature must be above the boiling point of the applied solvent. However, the temperature profile must be controlled by using multizoned ovens. Coating flaws known as "craters" or "fish eyes" will develop if the initial drying proceeds too quickly. These ovens are physically divided into several sections, each with its own hot air supply and exhaust. By keeping the temperature of the first zone low, and then gradually increasing it in subsequent zones, uniform drying can be accomplished without flaws. After exiting the drying oven, the continuous web is wound on a roll, and the coating process is complete.

Emissions[1,6-10] - The only pollutants emitted in significant quantities from solvent base coating of pressure sensitive tapes and labels are volatile organic compounds (VOC) from solvent evaporation. In an uncontrolled facility, essentially all of the solvent used in the coating formulation is emitted to the atmosphere. Of these uncontrolled emissions, 80 to 95 percent are emitted with the drying oven exhaust. Some solvent (from zero to five percent) can remain in the final coated product, although this solvent will eventually evaporate into the atmosphere. The remainder of applied solvent is lost from a number of small sources as fugitive emissions. The major VOC emission points in a PSTL surface coating operation are indicated in Figure 4.2.2.9-1.

There are also VOC losses from solvent storage and handling, equipment cleaning, miscellaneous spills, and coating formulation mixing tanks. These emissions are not addressed here, as these sources have a comparatively small quantity of emissions.

Fugitive solvent emissions during the coating process come from the evaporative loss of solvent around the coating head and from the exposed wet web prior to its entering the drying oven. The magnitude of these losses is determined by the width of the web, the line speed, the volatility and temperature of the solvent, and the air turbulence in the coating area.

Two factors which directly determine total line emissions are the weight (thickness) of the applied coating on the web and the solvent/solids ratio of the coating formulations. For coating

formulations with a constant solvent/solids ratio during coating, any increases in coating weight would produce higher levels of VOC emissions. The solvent/solids ratio in coating formulations is not constant industrywide. This ratio varies widely among products. If a coating weight is constant, greater emissions will be produced by increasing the weight percent solvent of a particular formulation.

These two operating parameters, combined with line speed, line width and solvent volatility, produce a number of potentional mass emission situations. Table 4.2.2.9-1 presents emission factors for controlled and uncontrolled PSTL surface coating operations. The potential amount of VOC emissions from the coating process is equal to the total amount of solvent applied at the coating head.

Controls[1,6-18] - The complete air pollution control system for a modern pressure sensitive tape or label surface coating facility consists of two sections, the solvent vapor capture system and the emission control device. The capture system collects VOC vapors from the coating head, the wet web and the drying oven. The captured vapors are directed to a control device to be either recovered (as liquid solvent) or destroyed. As an alternate emission control technique, the PSTL industry is also using low-VOC content coatings to reduce their VOC emissions. Waterborne and hot melt coatings and radiation cured prepolymers are examples of these low-VOC content coatings. Emissions of VOC from such coatings are negligible or zero. Low-VOC content coatings are not universally applicable to the PSTL industry, but about 25 percent of the production in this industry is presently using these innovative coatings.

Capture Systems - In a typical PSTL surface coating facility, 80 to 95 percent of VOC emissions from the coating process is captured in the coating line drying ovens. Fans are used to direct drying oven emissions to a control device. In some facilities a portion of the drying oven exhaust is recirculated into the oven instead of to a control device. Recirculation is used to increase the VOC concentration of the drying oven exhaust gases going to the control device.

Another important aspect of capture in a PSTL facility involves fugitive VOC emissions. Three techniques can be used to collect fugitive VOC emissions from PSTL coating lines. The first involves the use of floor sweeps and/or hooding systems around the coating head and exposed coated web. Fugitive emissions collected in the hoods can be directed into the drying oven and on to a control device, or they can be sent directly to the control device. The second capture technique involves enclosing the entire coating line or the coating application and flashoff areas. By maintaining

TABLE 4.2.2.9-1. EMISSION FACTORS FOR PRESSURE SENSITIVE TAPE AND LABEL SURFACE COATING OPERATIONS

EMISSION FACTOR RATING: C

	Nonmethane VOC[a]		
	Uncontrolled	85% Control	90% Control
Emission Points	kg/kg (lb/lb)	kg/kg (lb/lb)	kg/kg (lb/lb)
Drying Oven Exhaust[b]	0.80-0.95	———	———
Fugitives[c]	0.01-0.15	0.01-0.095	0.0025-0.0425
Product Retention[d]	0.01-0.05	0.01-0.05	0.01-0.05
Control Device[e]	———	0.045	0.0475
Total Emissions[f]	1.0	0.15	0.10

[a]Expressed as the mass of volatile organic compounds (VOC) emitted per mass of total solvent used. Solvent is assumed to consist entirely of VOC.

[b]References 1, 6-7, 9. Dryer exhaust emissions depend on coating line operating speed, frequency of line downtime, coating composition and oven design.

[c]Determined by difference between total emissions and other point sources. Magnitude is determined by size of the line equipment, line speed, volatility and temperature of the solvents, and air turbulence in the coating area.

[d]References 6-8. Solvent in the product eventually evaporates into the atmosphere.

[e]References 1, 10, 17-18. Emissions are residual content in captured solvent laden air vented after treatment. Controlled coating line emissions are based on an overall reduction efficiency which is equal to capture efficiency times control device efficiency. For 85% control, capture efficiency is 90% with a 95% efficient control device. For 90% control, capture efficiency is 95% with a 95% efficient control device.

[f]Values assume that uncontrolled coating lines eventually emit 100% of all solvents used.

a slight negative pressure within the enclosure, a capture efficiency of 100 percent is theoretically possible. The captured emissions are directed by fans into the oven or to a control device. The third capture technique is an expanded form of total enclosure. The entire building or structure which houses the coating line acts as an enclosure. The entire room air is vented to a control device. The maintenance of a slight negative pressure ensures that very few emissions escape the room.

The efficiency of any vapor capture system is highly dependent on its design and its degree of integration with the coating line equipment configuration. The design of any system must allow safe and adequate access to the coating line equipment for maintenance. The system must also be designed to protect workers from exposure to unhealthy concentrations of the organic solvents used in the surface coating processes. The efficiency of a well designed combined dryer exhaust and fugitive capture system is 95 percent.

Control Devices - The control devices and/or techniques that may be used to control captured VOC emissions can be classified into two categories, solvent recovery and solvent destruction. Fixed bed carbon adsorption is the primary solvent recovery technique used in this industry. In fixed bed adsorption, the solvent vapors are adsorbed onto the surface of activated carbon, and the solvent is regenerated by steam. Solvent recovered in this manner may be reused in the coating process or sold to a reclaimer. The efficiency of carbon adsorption systems can reach 98 percent, but a 95 percent efficiency is more characteristic of continuous long term operation.

The primary solvent destruction technique used in the PSTL industry is thermal incineration, which can be as high as 99 percent efficient. However, operating experience with incineration devices has shown that 95 percent efficiency is more characteristic. Catalytic incineration could be used to control VOC emissions with the same success as thermal incineration, but no catalytic devices have been found in the industry.

The efficiencies of carbon adsorption and thermal incineration control techniques on PSTL coating VOC emissions have been determined to be equal. Control device emission factors presented in Table 4.2.2.9-1 represent the residual VOC content in the exhaust air after treatment.

The overall emission reduction efficiency for VOC emission control systems is equal to the capture efficiency times the control device efficiency. Emission factors for two control levels are presented in Table 4.2.2.9-1. The 85 percent control

level represents 90 percent capture with a 95 percent efficient control device. The 90 percent control level represents 95 percent capture with a 95 percent efficient control device.

References for Section 4.2.2.9

1. The Pressure Sensitive Tape and Label Surface Coating Industry - Background Information Document, EPA-450/3-80-003a, U. S. Environmental Protection Agency, Research Triangle Park, NC, September 1980.

2. State of California Tape and Label Coaters Survey, California Air Resources Board, Sacramento, CA, April 1978. Confidential.

3. M. R. Rifi, "Water Based Pressure Sensitive Adhesives, Structure vs. Performance", presented at Technical Meeting on Water Based Systems, Chicago, IL, June 21-22, 1978.

4. Pressure Sensitive Products and Adhesives Market, Frost and Sullivan Inc., Publication No. 614, New York, NY, November 1978.

5. Silicone Release Questionnaire, Radian Corporation, Durham, NC, May 4, 1979. Confidential.

6. Written communication from Frank Phillips, 3M Company, to G. E. Harris, Radian Corporation, Durham, NC, October 5, 1978. Confidential.

7. Written communication from R. F. Baxter, Avery International, to G. E. Harris, Radian Corporation, Durham, NC, October 16, 1978. Confidential.

8. G. E. Harris, "Plant Trip Report, Shuford Mills, Hickory, NC", Radian Corporation, Durham, NC, July 28, 1978.

9. T. P. Nelson, "Plant Trip Report, Avery International, Painesville, OH", Radian Corporation, Durham, NC, July 26, 1979.

10. Control of Volatile Organic Emissions from Existing Stationary Sources - Volume II: Surface Coating of Cans, Coils, Paper, Fabrics, Automobiles, and Light Duty Trucks, EPA-450/2-77-008, U. S. Environmental Protection Agency, Research Triangle Park, NC, May 1977.

11. Ben Milazzo, "Pressure Sensitive Tapes", Adhesives Age, 22:27-28, March 1979.

12. T. P. Nelson, "Trip Report for Pressure Sensitive Adhesives - Adhesives Research, Glen Rock, PA", Radian Corporation, Durham, NC February 16, 1979.

13. T. P. Nelson, "Trip Report for Pressure Sensitive Adhesives - Precoat Metals, St. Louis, MO", Radian Corporation, Durham, NC August 28, 1979.

14. G. W. Brooks, "Trip Report for Pressure Sensitive Adhesives - E. J. Gaisser, Incorporated, Stamford, CT", Radian Corporation, Durham, NC, September 12, 1979.

15. Written communication from D. C. Mascone to J. R. Farmer, Office of Air Quality Planning and Standards, U. S. Environmental Protection Agency, Research Triangle Park, NC, June 11, 1980.

16. Written communication from R. E. Miller, Adhesives Research, Incorporated, to T. P. Nelson, Radian Corporation, Durham, NC, June 18, 1979.

17. A. F. Sidlow, Source Test Report Conducted at Fasson Products, Division of Avery Corporation, Cucamonga, CA, San Bernardino County Air Pollution Control District, San Bernardino, CA, January 26, 1972.

18. R. Milner, et al., Source Test Report Conducted at Avery Label Company, Monrovia, CA, Los Angeles Air Pollution Control District, Los Angeles, CA, March 18, 1975.

4.2.2.10 METAL COIL SURFACE COATING

General[1-2] - Metal coil surface coating (coil coating) is the linear process by which protective or decorative organic coatings are applied to flat metal sheet or strip packaged in rolls or coils. Although the physical configurations of coil coating lines differ from one installation to another, the operations generally follow a set pattern. Metal strip is uncoiled at the entry to a coating line and is passed through a wet section, where the metal is thoroughly cleaned and is given a chemical treatment to inhibit rust and to promote coatings adhesion to the metal surface. In some installations, the wet section contains an electrogalvanizing operation. Then the metal strip is dried and sent through a coating application station, where rollers coat one or both sides of the metal strip. The strip then passes through an oven where the coatings are dried and cured. As the strip exits the oven, it is cooled by a water spray and again dried. If the line is a tandem line, there is first the application of a prime coat, followed by another of top or finish coat. The second coat is also dried and cured in an oven, and the strip is again cooled and dried before being rewound into a coil and packaged for shipment or further processing. Most coil coating lines have accumulators at the entry and exit that permit continuous metal strip movement through the coating process while a new coil is mounted at the entry or a full coil removed at the exit. Figure 4.2.2.10-1 is a flow diagram of a coil coating line.

Coil coating lines process metal in widths ranging from a few centimeters to 183 centimeters (72 inches), and in thicknesses of from 0.018 to 0.229 centimeters (0.007 to 0.090 inches). The speed of the metal strip through the line is as high as 3.6 meters per second (700 feet per minute) on some of the newer lines.

A wide variety of coating formulations is used by the coil coating industry. The more prevalent coating types include polyesters, acrylics, polyfluorocarbons, alkyds, vinyls and plastisols. About 85 percent of the coatings used are organic solvent base and have solvent contents ranging from near 0 to 80 volume percent, with the prevalent range being 40 to 60 volume percent. Most of the remaining 15 percent of coatings are waterborne, but they contain organic solvent in the range of 2 to 15 volume percent. High solids coatings, in the form of plastisols, organosols and powders, are also used to some extent by the industry, but the hardware is different for powder applications.

The solvents most often used in the coil coating industry include xylene, toluene, methyl ethyl ketone, Cellosolve Acetate (TM), butanol, diacetone alcohol, Cellosolve (TM), Butyl Cellosolve (TM), Solvesso 100 and 150 (TM), isophorone, butyl carbinol, mineral spirits, ethanol, nitropropane, tetrahydrofuran, Panasolve (TM), methyl isobutyl ketone, Hisol 100 (TM), Tenneco T-125 (TM), isopropanol, and diisoamyl ketone.

Coil coating operations can be classified in one of two operating categories, toll coaters and captive coaters. The toll coater is a service coater who works for many customers according to the needs and specifications

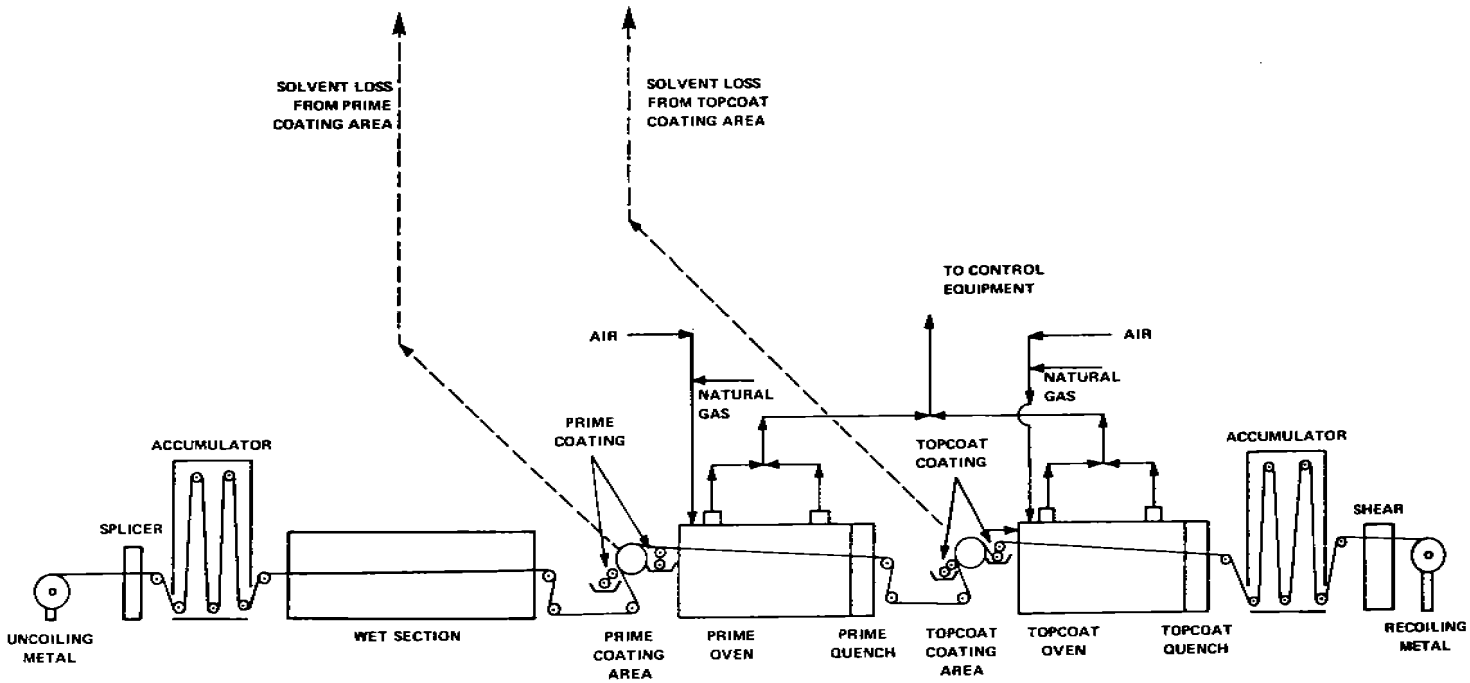

Figure 4.2.2.10-1. Flow Diagram of model coil coating line.

of each. The coated metal is delivered to the customer, who forms the end products. Toll coaters use many different coating formulations and normally use mostly organic solvent base coatings. Major markets for toll coating operations include the transportation industry, the construction industry and appliance, furniture and container manufacturers. The captive coater is normally one operation in a manufacturing process. Many steel and aluminum companies have their own coil coating operations, where the metal they produce is coated and then formed into end products. Captive coaters are much more likely to use water base coatings because the metal coated is often used for only a few end products. Building products such as aluminum siding are one of the more important uses of waterborne metal coatings.

Emission and Controls[1-12] - Volatile organic compounds (VOC) are the major pollutants emitted from metal coil surface coating operations. Specific operations that emit VOC are the coating application station, the curing oven and the quench area. These are identified in Figure 4.2.2.10-1. VOC emissions result from the evaporation of organic solvents contained in the coating. The percentage of total VOC emissions given off at each emission point varies from one installation to another, but, on the average, about 8 percent is given off at the coating application station, 90 percent the oven and 2 percent the quench area. On most coating lines, the coating application station is enclosed or hooded to capture fugitive emissions and to direct them into the oven. The quench is an enclosed operation located immediately adjacent to the exit end of the oven so that a large fraction of the emissions given off at the quench is captured and directed into the oven by the oven ventilating air. In operations such as these, approximately 95 percent of the total emissions is exhausted by the oven, and the remaining 5 percent escapes as fugitive emissions.

The rate of VOC emissions from individual coil coating lines may vary widely from one installation to another. Factors that affect the emission rate include VOC content of coatings as applied, VOC density, area of metal coated, solids content of coatings as applied, thickness of the applied coating and number of coats applied. Because the coatings are applied by roller coating, transfer efficiency is generally considered to approach 100 percent and therefore does not affect the emission rate.

Two emission control techniques are widespread in the coil coating industry, incineration and use of low VOC content coatings. Incinerators may be either thermal or catalytic, both of which have been demonstrated to achieve consistently a VOC destruction efficiency of 95 percent or greater. When used with coating rooms or hoods to capture fugitive emissions, incineration systems can reduce overall emissions by 90 percent or more.

Waterborne coatings are the only low VOC content coating technology that is used to a significant extent in the coil coating industry. These coatings have substantially lower VOC emissions than most of the organic solventborne coatings. Waterborne coatings are used as an emission control technique most often by installations that coat metal for only a few products, such as building materials. Many such coaters are captive to the firm that produces and sells the products fabricated from the coated coil. Because waterborne

TABLE 4.2.2.10-1. VOC EMISSION FACTORS FOR COIL COATING[a]

EMISSION FACTOR RATING: C

Coatings	kg/hr (lb/hr)		kg/m^2 (lb/ft^2)	
	Average	Normal range	Average	Normal range
Solventborne				
uncontrolled	303 (669)	50 - 1,798 (110 - 3,964)	0.060 (0.012)	0.027 - 0.160 (0.006 - 0.033)
controlled[b]	30 (67)	5 - 180 (11 - 396)	0.0060 (0.0012)	0.0027 - 0.0160 (0.0006 - 0.0033)
Waterborne	50 (111)	3 - 337 (7 - 743)	0.0108 (0.0021)	0.0011 - 0.0301 (0.0003 - 0.0062)

[a]All nonmethane VOC. Factors are calculated using the following equations and the operating parameters given in Table 4.2.2.10-2.

$$(1) \qquad E = \frac{0.623\ ATVD}{S}$$

where

E = mass of VOC emissions per hour (lb/hr)
A = Area of metal coated per hour (ft^2)
= Line speed (ft/min) x strip width (ft) x 60 min/hr
V = VOC content of coatings (fraction by volume)
D = VOC Density (assumed to be 7.36 lb/gal)
S = Solids content of coatings (fraction by volume)
T = Total dry film thickness of coatings applied (in).

The constant 0.623 represents conversion factors of 7.48 gal/ft^3 divided by the conversion factor of 12 in/ft.

$$(2) \qquad M = \frac{E}{A}$$

where

M = mass of VOC emissions per unit area coated.

[b]Computed by assuming a 90 percent overall control efficiency (95 percent capture and 95 percent removal by the control device).

TABLE 4.2.2.10-2. OPERATING PARAMETERS FOR SMALL, MEDIUM AND LARGE COIL COATING LINES[a]

Line size	Line speed (ft/min)	Strip width (ft)	Total dry film thickness[b] (in)	VOC content[c] (fraction)	Solids content[c] (fraction)	VOC density[b] (lb/gal)
			Solventborne coatings			
Small	200	1.67	0.0018	0.40	0.60	7.36
Medium	300	3	0.0018	0.60	0.40	7.36
Large	500	4	0.0018	0.80	0.20	7.36
			Waterborne coatings			
Small	200	1.67	0.0018	0.02	0.50	7.36
Medium	300	3	0.0018	0.10	0.40	7.36
Large	500	4	0.0018	0.15	0.20	7.36

[a]Obtained from Reference 3.
[b]Average value assumed for emission factor calculations. Actual values should be used to estimate emissions from individual sources.
[c]All three values of VOC content and solids content were used in the calculation of emission factors for each plant size to give maximum, minimum and average emission factors.

coatings have not been developed for many coated metal coil uses, most toll coaters use organic solventborne coatings and control their emissions by incineration. Most newer incinerator installations use heat recovery to reduce the operating cost of an incineration system.

Emission factors for coil coating operations and the equations used to compute them are presented in Table 4.2.2.10-1. The values presented therein represent maximum, minimum and average emissions from small, medium and large coil coating lines. An average film thickness and an average solvent content are assumed to compute the average emission factor. Values for the VOC content near the maximum and minimum used by the industry are assumed for the calculations of maximum and minimum emission factors.

The emission factors in Table 4.2.2.10-1 are useful in estimating VOC emissions for a large sample of coil coating sources, but they may not be

applicable to individual plants. To estimate the emissions from a specific plant, operating parameters of the coil coating line should be obtained and used in the equation given in the footnote to the Table. If different coatings are used for prime and topcoats, separate calculations must be made for each coat. Operating parameters on which the emission factors are based are presented in Table 4.2.2.10-2.

References for Section 4.2.2.10

1. Metal Coil Surface Coating Industry - Background Information for Proposed Standards, EPA-450/3-80-035a, U.S. Environmental Protection Agency, Research Triangle Park, NC, October 1980.

2. Control of Volatile Organic Emissions from Existing Stationary Sources, Volume II: Surface Coating of Cans, Coils, Paper, Fabrics, Automobiles, and Light Duty Trucks, EPA-450/2-77-008, U.S. Environmental Protection Agency, Research Triangle Park, NC, May 1977.

3. Unpublished survey of the Coil Coating Industry, Office of Water and Waste Management, U.S. Environmental Protection Agency, Washington, DC, 1978.

4. Communication between Milton Wright, Research Triangle Institute, Research Triangle Park, NC, and Bob Morman, Glidden Paint Company, Strongville, OH, June 27, 1979.

5. Communication between Milton Wright, Research Triangle Institute, Research Triangle Park, NC, and Jack Bates, DeSoto, Incorporated, Des Plaines, IL, June 25, 1980.

6. Communication between Milton Wright, Research Triangle Institute, Research Triangle Park, NC, and M. W. Miller, DuPont Corporation, Wilmington, DE, June 26, 1980.

7. Communication between Milton Wright, Research Triangle Institute, Research Triangle Park, NC, and H. B. Kinzley, Cook Paint and Varnish Company, Detroit, MI, June 27, 1980.

8. Written communication from J. D. Pontius, Sherwin Williams, Chicago, IL, to J. Kearney, Research Triangle Institute, Research Triangle Park, NC, January 8, 1980.

9. Written communication from Dr. Maynard Sherwin, Union Carbide, South Charleston, WV, to Milton Wright, Research Triangle Institute, Research Triangle Park, NC, January 21, 1980.

10. Written communication from D. O. Lawson, PPG Industries, Springfield, PA, to Milton Wright, Research Triangle Institute, Research Triangle Park, NC, February 8, 1980.

11. Written communication from National Coil Coaters Association, Philadelphia, PA, to Office of Air Quality Planning and Standards, U.S. Environmental Protection Agency, Research Triangle Park, NC, May 30, 1980.

12. Written communication from Paul Timmerman, Hanna Chemical Coatings Corporation, Columbus, OH, to Milton Wright, Research Triangle Institute, Research Triangle Park, NC, July 1, 1980.

4.2.2.11 LARGE APPLIANCE SURFACE COATING

General[1] - Large appliance surface coating is the application of protective or decorative organic coatings to preformed large appliance parts. For this discussion, large appliances are defined as any metal range, oven, microwave oven, refrigerator, freezer, washing machine, dryer, dishwasher, water heater or trash compactor.

Regardless of the appliance, similar manufacturing operations are involved. Coiled or sheet metal is cut and stamped into the proper shapes, and the major parts welded together. The welded parts are cleaned with organic degreasers or a caustic detergent (or both) to remove grease and mill scale accumulated during handling, and the parts are then rinsed in one or more water rinses. This is often followed by a process to improve the grain of the metal before treatment in a phosphate bath. Iron or zinc phosphate is commonly used to deposit a microscopic matrix of crystalline phosphate on the surface of the metal. This process provides corrosion resistance and increases the surface area of the part, thereby allowing superior coating adhesion. Often the highly reactive metal is protected with a rust inhibitor to prevent rusting prior to painting.

Two separate coatings have traditionally been applied to these prepared appliance parts, a protective prime coating that also covers surface imperfections and contributes to total coating thickness, and a final, decorative top coat. Single coat systems, where only a prime coat or only a top coat is applied, are becoming more common. For parts not exposed to customer view, a prime coat alone may suffice. For exposed parts, a protective coating may be formulated and applied so as to act as the top coat. There are many different application techniques in the large appliance industry, including manual, automatic and electrostatic spray operations, and several dipping methods. Selection of a particular method depends largely upon the geometry and use of the part, the production rate, and the type of coating being used. Typical application of these coating methods is shown in Figure 4.2.2.11-1.

A wide variety of coating formulations is used by the large appliance industry. The prevalent coating types include epoxies, epoxy/acrylics, acrylics and polyester enamels. Liquid coatings may use either an organic solvent or water as the main carrier for the paint solids.

Waterborne coatings are of three major classes, water solutions, water emulsions and water dispersions. All of the waterborne coatings, however, contain a small amount (up to 20 volume percent) of organic solvent that acts as a stabilizing, dispersing or emulsifying agent. Waterborne systems offer some advantages over organic solvent systems. They do not exhibit as great an increase in viscosity with increasing molecular weight of solids, they are nonflammable, and they have limited toxicity. But because of the relatively slow evaporation rate of water, it is difficult to achieve a smooth finish with waterborne coatings. A bumpy "orange peel" surface often results. For this reason, their main use in the large appliance industry is as prime coats.

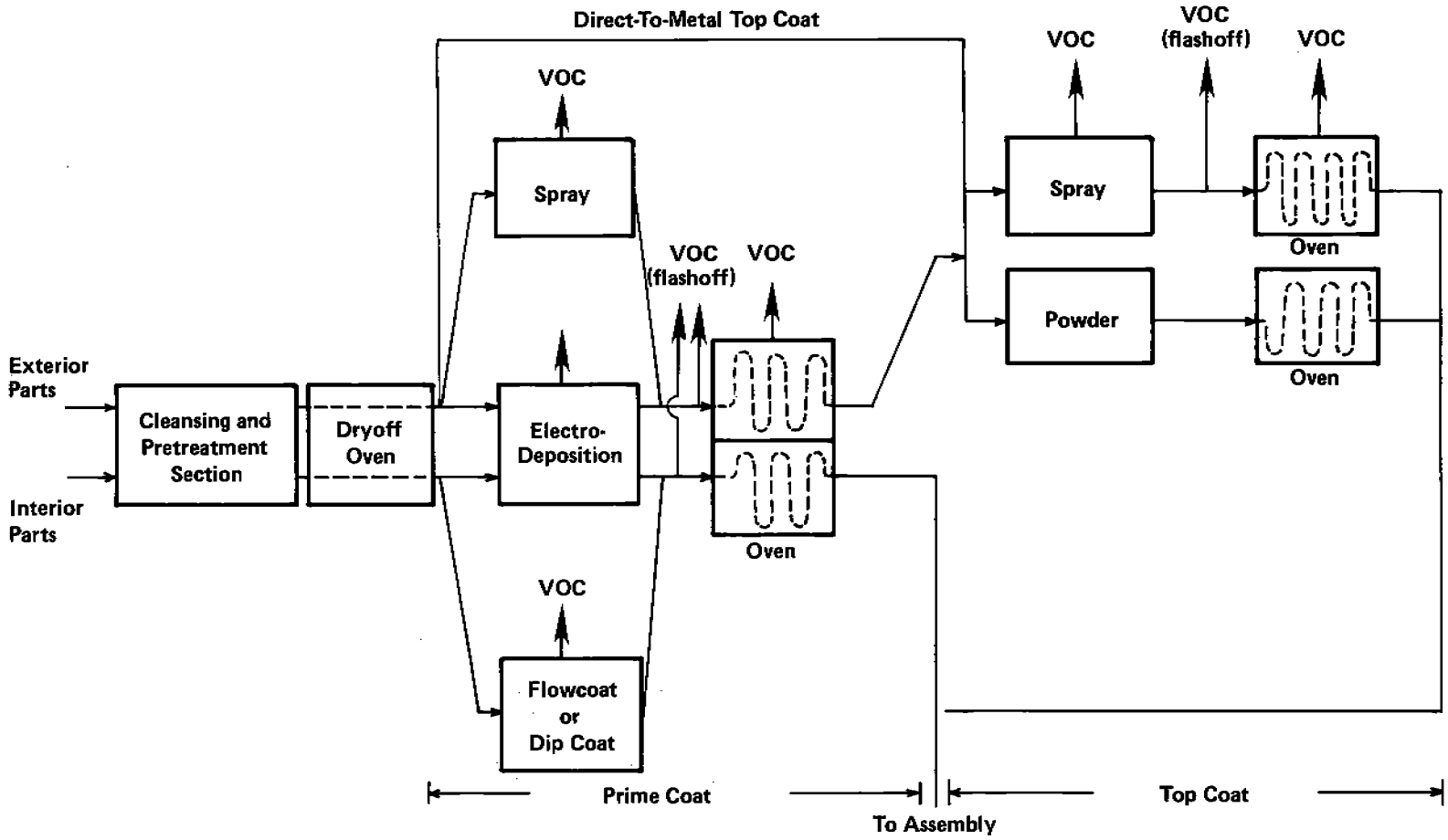

Figure 4.2.2.11-1. Typical coating application methods in the large appliance industry.

While conventional organic solventborne coatings also are used for prime coats, they predominate as top coats. This is due in large part to the controllability of the finish and the amenability of these materials to application by electrostatic spray techniques. The most common organic solvents are ketones, esters, ethers, aromatics and alcohols. To obtain or maintain certain application characteristics, solvents are often added to coatings at the plant. The use of powder coatings for top coats is gaining acceptance in the industry. These coatings, which are applied as a dry powder and then fused into a continuous coating film through the use of heat, yield negligible emissions.

Emissions and Controls[1-2] - Volatile organic compounds (VOC) are the major pollutants emitted from large appliance surface coating operations. VOC from evaporation of organic solvents contained in the coating are emitted in the application station, the flashoff area and the oven. An estimated 80 percent of total VOC emissions is given off in the application station and flashoff area. The remaining 20 percent occurs in the oven. Because the emissions are widely dispersed, the use of capture systems and control devices is not an economically attractive means of controlling emissions. While both incinerators and carbon adsorbers are technically feasible, none is known to be used in production, and none is expected. Improvements in coating formulation and application efficiency are the major means of reducing emissions.

Factors that affect the emission rate include the volume of coating used, the coating's solids content, the coating's VOC content, and the VOC density. The volume of coating used is a function of three additional variables, 1) the area coated, 2) the coating thickness and 3) the application efficiency.

While a reduction in coating VOC content will reduce emissions, the transfer efficiency with which the coating is applied (i.e., the volume required to coat a given surface area) also has a direct bearing on the emissions. A transfer efficiency of 60 percent means that 60 percent of the coating solids consumed is deposited usefully onto appliance parts. The other 40 percent is wasted overspray. With a specified VOC content, an application system with a high transfer efficiency will have lower emission levels than will a system with a low transfer efficiency, because a smaller volume of coating will coat the same surface area. Since not every application method can be used with all parts and types of coating, transfer efficiencies in this industry range from 40 to over 95 percent.

Although waterborne prime coats are becoming common, the trend for top coats appears to be toward use of "high solids" solventborne material, generally 60 volume percent or greater solids. As different types of coatings are required to meet different performance specifications, a combination of reduced coating VOC content and improved transfer efficiency is the most common means of emission reduction.

In the absence of control systems that remove or destroy a known fraction of the VOC prior to emission to the atmosphere, a material balance provides the quickest and most accurate emissions estimate. An equation to calculate

emissions is presented below. To the extent that the parameters of this equation are known or can be determined, its use is encouraged. In the event that both a prime coat and a top coat are used, the emissions from each must be calculated separately and added to estimate total emissions. Because of the diversity of product mix and plant sizes, it is difficult to provide emission factors for "typical" facilities. Approximate values for several of the variables in the equation are provided, however.

$$E = \frac{(6.234 \times 10^{-4})\ P\ A\ t\ V_o\ D_o}{V_s T} + L_d\ D_d$$

where

E = mass of VOC emissions per unit time (lb/unit time)
P = units of production per unit time
A = area coated per unit of production (ft^2)
t = dry coating thickness (mils)
V_o = proportion of VOC in the coating (volume fraction), as received*
D_o = density of VOC solvent in the coating (lb/gal), as received*
V_s = proportion of solids in the coating (volume fraction), as received*
T = transfer efficiency (fraction - the ratio of coating solids deposited onto appliance parts to the total amount of coating solids used. See Table 4.2.2.11-1).
L_d = volume of VOC solvent added to the coating per unit time (gal/unit time).
D_d = density of VOC solvent added (lb/gal).

The constant 6.234×10^{-4} is the product of two conversion factors:

$$\frac{8.333 \times 10^{-5}\ ft}{mil} \text{ and } \frac{7.481\ gal}{ft^3}.$$

If all the data are not available to complete the above equation, the following may be used as approximations:

V_o = 0.38
D_o = 7.36 lb/gal
V_s = 0.62
L_d = 0 (assumes no solvent added at the plant).

---

*If known, V_o, D_o and V_s for the coating as applied (i.e., diluted) may be used in lieu of the values for the coating as received, and the term $L_d D_d$ deleted.

TABLE 4.2.2.11-1. TRANSFER EFFICIENCIES

Application Method	Transfer Efficiency (T)
Air atomized spray	0.40
Airless spray	0.45
Manual electrostatic spray	0.60
Flow coat	0.85
Dip coat	0.85
Nonrotational automatic electrostatic spray	0.85
Rotating head automatic electrostatic spray	0.90
Electrodeposition	0.95
Powder	0.95

TABLE 4.2.2.11-2. AREAS COATED AND COATING THICKNESS

Appliance	Prime Coat		Top Coat	
	$A(ft^2)$	t(mils)	$A(ft^2)$	t(mils)
Compactor	20	0.5	20	0.8
Dishwasher	10	0.5	10	0.8
Dryer	90	0.6	30	1.2
Freezer	75	0.5	75	0.8
Microwave oven	8	0.5	8	0.8
Range	20	0.5	30	0.8
Refrigerator	75	0.5	75	0.8
Washing machine	70	0.6	25	1.2
Water heater	20	0.5	20	0.8

In the absence of all operating data, an emission estimate of 49.9 Mg (55 tons) of VOC per year may be used for the average appliance plant. Because of the large variation in emissions among plants (from less than 10 to more than 225 Mg [10 to 250 tons] per year), caution is advised when this estimate is used for anything except approximations for a large geographical area. Most of the known large appliance plants are in localities considered nonattainment areas for achieving the national ambient air quality standard (NAAQS) for ozone. The 49.9-Mg-per-year average is based on an emission limit of 2.8 lb/VOC per gallon of coating (minus water), which is the limit recommended by the Control Techniques Guideline (CTG) applicable in those areas. For a plant operating in an area where there are no emission limits, the emissions may be four times greater than from an identical plant subject to the CTG recommended limit.

References for Section 4.2.2.11

1. Industrial Surface Coating: Appliances - Background Information for Proposed Standards, EPA-450/3-80-037a, U. S. Environmental Protection Agency, Research Triangle Park, NC, November 1980.

2. Industrial Surface Coating: Large Appliances - Background Information for Promulgated Standards, EPA 450/3-80-037b, U. S. Environmental Protection Agency, Research Triangle Park, NC, 27711, October 1982.

4.2.2.12 METAL FURNITURE SURFACE COATING

4.2.2.12.1 General

The metal furniture surface coating process is a multistep operation consisting of surface cleaning and coatings application and curing. Items such as desks, chairs, tables, cabinets, bookcases and lockers are normally fabricated from raw material to finished product in the same facility. The industry uses primarily solventborne coatings, applied by spray, dip or flow coating processes. Spray coating is the most common application technique used. The components of spray coating lines vary from plant to plant but generally consist of the following:

Three to five stage washer
Dryoff oven
Spray booth
Flashoff area
Bake oven

Items to be coated are first cleaned in the washer to remove any grease, oil or dirt from the surface. The washer generally consists of an alkaline cleaning solution, a phosphate treatment to improve surface adhesion characteristics, and a hot water rinse. The items are then dried in an oven and conveyed to the spray booth, where the surface coating is applied. After this application, the items are conveyed through the flashoff area to the bake oven, where the surface coating is cured. A diagram of these consecutive steps is presented in Figure 4.2.2.12-1. Although most metal furniture products receive only one coat of paint, some facilities apply a prime coat before the top coating to improve the corrosion resistance of the product. In these cases, a separate spray booth and bake oven for application of the prime coat are added to the line, following the dryoff oven.

The coatings used in the industry are primarily solventborne resins, including acrylics, amines, vinyls and cellulosics. Some metallic coatings are also used on office furniture. The solvents used are mixtures of aliphatics, xylene, toluene and other aromatics. Typical coatings that have been used in the industry contain 65 volume percent solvent and 35 volume percent solids. Other types of coatings now being used in the industry are waterborne, powder and solventborne high solids coatings.

4.2.2.12.2 Emissions and Controls

Volatile organic compounds (VOC) from the evaporation of organic solvents in the coatings are the major pollutants from metal furniture surface coating operations. Specific operations that emit VOC are the coating application process, the flashoff area and the bake oven. The percentage of total VOC emissions given off at each emission point varies from one installation to another, but on the average spray coating line, about 40 percent is given off at the application station, 30 percent in the flashoff area, and 30 percent in the bake oven.

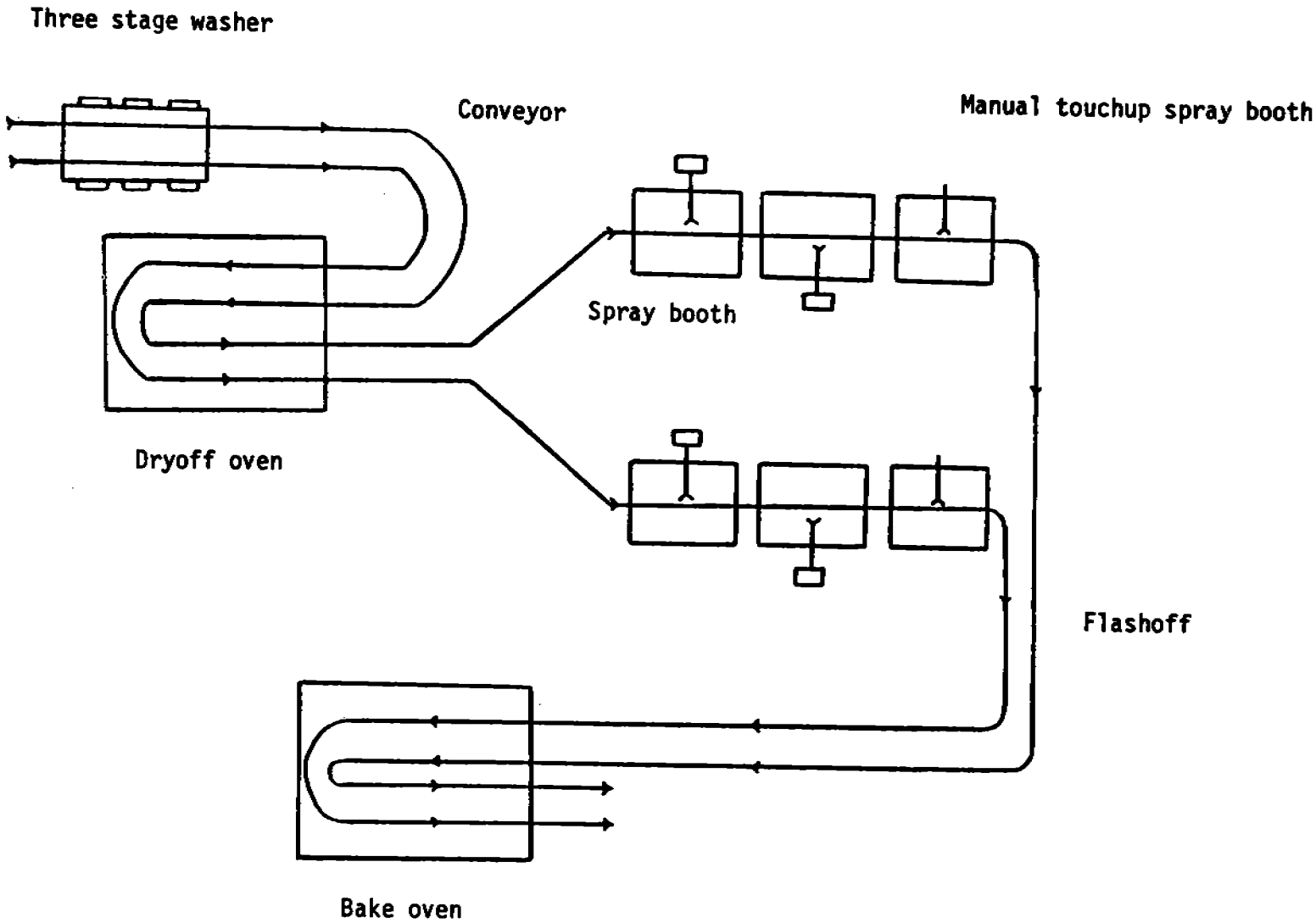

Figure 4.2.2.12-1. Example automated spray coating lines, with manual touchup.

Factors affecting the quantity of VOC emitted from metal furniture surface coating operations are the VOC content of the coatings applied, the solids content of coatings as applied and the transfer efficiency. Knowledge of both the VOC content and solids content of coatings is necessary in cases where the coating contains other components, such as water.

The transfer efficiency (volume fraction of the solids in the total consumed coating that remains on the part) varies with the application technique. Transfer efficiency for standard (or ordinary) spraying ranges from 25 to 50 percent. The range for electrostatic spraying, a method that uses an electrical potential to increase transfer efficiency of the coating solids, is from 50 to 95 percent, depending on part size and shape. Powder coating systems normally capture and recirculate overspray material and, therefore, are considered in terms of a "utilization rate" rather than a transfer efficiency. Most facilities achieve a powder utilization rate of 90 to 95 percent.

Typical values for transfer efficiency with various application devices are in Table 4.2.2.12-1.

Two types of control techniques are available to reduce VOC emissions from metal furniture surface coating operations. The first technique makes use of control devices such as carbon adsorbers and thermal or catalytic incinerators to recover or destroy VOC before it is discharged into the ambient air. These control methods are seldom used in the industry, however, because the large volume of exhaust air and low concentrations of VOC in the exhaust reduce their efficiency. The more prevalent control technique involves reducing the total amount of VOC likely to be evaporated and emitted. This is accomplished by use of low VOC content coatings and by improvements in transfer efficiency. New coatings with relatively low VOC levels can be used instead of the traditional high VOC content coatings. Examples of these new systems include waterborne coatings, powder coatings, and higher solids coatings. Improvements in coating transfer efficiency decrease the amount that must be used to achieve a given film thickness, thereby reducing emissions of VOC to the ambient air. By using a system with increased transfer efficiency (such as electrostatic spraying) and lower VOC content coatings, VOC emission reductions can approach those achieved with control devices.

The data presented in Tables 4.2.2.12-2 and 4.2.2.12-3 are representative of values which might be obtained from existing plants with similar operating characteristics. Each plant has its own combination of coating formulations, application equipment and operating parameters. It is recommended that, whenever possible, plant specific values be obtained for all variables when calculating emission estimates.

Another method that also may be used to estimate emissions for metal furniture coating operations involves a material balance approach. By assuming that all VOC in the coatings applied are evaporated at the plant site, an estimate of emissions can be calculated using only the coating formulation and data on the total quantity of coatings used in a given time period. The percentage of VOC solvent in the coating, multiplied by the quantity of coatings used yields the total emissions. This method of emissions estimation avoids the requirement to use variables such as coating thickness and transfer efficiency, which are often difficult to define precisely.

TABLE 4.2.2.12-1. COATING METHOD TRANSFER EFFICIENCIES

Application Methods	Transfer Efficiency (Te)
Air atomized spray	0.25
Airless spray	0.25
Manual electrostatic spray	0.60
Nonrotational automatic electrostatic spray	0.70
Rotating head electrostatic spray (manual and automatic)	0.80
Dip coat and flow coat	0.90
Electrodeposition	0.95

TABLE 4.2.2.12-2. OPERATING PARAMETERS FOR COATING OPERATIONS

Plant size	Operating schedule (hr/yr)	Number of lines	Line speed[a] (m/min)	Surface area coated/yr (m^2)	Liters of coating used[b]
Small	2,000	1 (1 spray booth)	2.5	45,000	5,000
Medium	2,000	2 (3 booths/line)	2.4	780,000	87,100
Large	2,000	10 (3 booths/line)	4.6	4,000,000	446,600

[a]Line speed is not used to calculate emissions, only to characterize plant operations.

[b]Using 35 volume % solids coating, applied by electrostatic spray at 65 % transfer efficiency.

TABLE 4.2.2.12-3. EMISSION FACTORS FOR VOC FROM SURFACE COATING OPERATIONS[a, b]

Plant Size and Control Techniques	VOC Emissions		
	kg/m^2 coated	kg/year	kg/hour
Small			
Uncontrolled emissions	.064	2,875	1.44
65 volume % high solids coating	.019	835	.42
Waterborne coating	.012	520	.26
Medium			
Uncontrolled emissions	.064	49,815	24.90
65 volume % high solids coating	.019	14,445	7.22
Waterborne coating	.012	8,970	4.48
Large			
Uncontrolled emissions	.064	255,450	127.74
65 volume % high solids coating	.019	74,080	37.04
Waterborne coating	.012	46,000	23.00

[a]Calculated using the parameters given in Table 4.2.2.12-2 and the following equation. Values have been rounded off.

$$E = \frac{0.0254\ A\ T\ V\ D}{S\ Te}$$

where E = Mass of VOC emitted per hour (kg)
A = Surface area coated per hour (m^2)
T = Dry film thickness of coating applied (mils)
V = VOC content of coating; including dilution solvents added at the plant (fraction by volume)
D = VOC density (assumed to be 0.88 kg/l)
S = Solids content of coating (fraction by volume)
Te = Transfer efficiency (fraction)

The constant 0.0254 converts the volume of dry film applied per m^2 to liters.

Example: The VOC emission from a medium size plant applying 35 volume % solids coatings and the parameters given in Table 4.2.2.12-3.

$$E_{\text{Kilograms of VOC/hr}} = \frac{0.0254(390m^2/hr)(1\ mil)(0.65)(0.88\ kg/l)}{(0.35)(0.65)}$$

$$= 24.9 \text{ kilograms of VOC per hour}$$

[b]Nominal values of T, V, S and Te:

T = 1 mil (for all cases)
V = 0.65 (uncontrolled), 0.35 (65 volume % solids), 0.117 (waterborne)
S = 0.35 (uncontrolled, 0.65 (65 volume % solids), 0.35 (waterborne)
Te = 0.65 (for all cases)

Reference for Section 4.2.2.12

1. Surface Coating of Metal Furniture - Background Information for Proposed Standards, EPA-450/3-80-007a, U. S. Environmental Protection Agency, Research Triangle Park, NC, September 1980.

4.3 STORAGE OF ORGANIC LIQUIDS

4.3.1 Process Description

Storage vessels containing organic liquids can be found in many industries, including (1) petroleum producing and refining, (2) petrochemical and chemical manufacturing, (3) bulk storage and transfer operations, and (4) other industries consuming or producing organic liquids. Organic liquids in the petroleum industry, usually called petroleum liquids, generally are mixtures of hydrocarbons having dissimilar true vapor pressures (for example, gasoline and crude oil). Organic liquids in the chemical industry, usually called volatile organic liquids, are composed of pure chemicals or mixtures of chemicals with similar true vapor pressures (for example, benzene or a mixture of isopropyl and butyl alcohols).

Five basic tank designs are used for organic liquid storage vessels, fixed roof, external floating roof, internal floating roof, variable vapor space, and pressure (low and high).

Fixed Roof Tanks - A typical fixed roof tank is shown in Figure 4.3-1. This type of tank consists of a cylindrical steel shell with a permanently affixed roof, which may vary in design from cone or dome shaped to flat.

Fixed roof tanks are commonly equipped with a pressure/vacuum vent that allows them to operate at a slight internal pressure or vacuum to prevent the release of vapors during very small changes in temperature, pressure or liquid level. Of current tank designs, the fixed roof tank is the least expensive to construct and is generally considered the minimum acceptable equipment for storage of organic liquids.

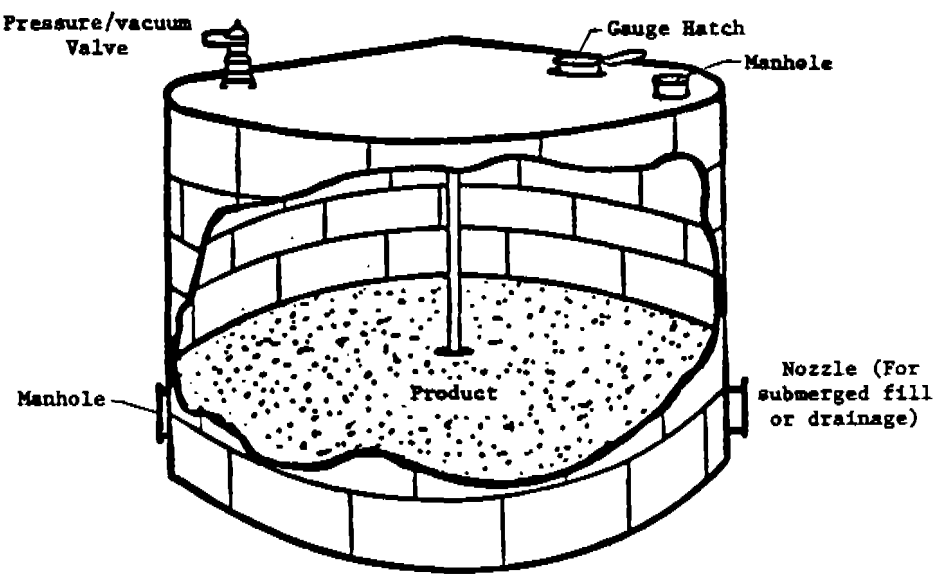

Figure 4.3-1. Typical fixed roof tank.[1]

External Floating Roof Tanks - A typical external floating roof tank is shown in Figure 4.3-2. This type of tank consists of a cylindrical steel shell equipped with a roof which floats on the surface of the stored liquid, rising and falling with the liquid level. The liquid surface is completely covered by the floating roof, except at the small annular space between the roof and the tank wall. A seal (or seal system) attached to the roof contacts the tank wall (with small gaps, in some cases) and covers the annular space. The seal slides against the tank wall as the roof is raised or lowered. The purpose of the floating roof and the seal (or seal system) is to reduce the evaporation loss of the stored liquid.

Internal Floating Roof Tanks - An internal floating roof tank has both a permanent fixed roof and a deck inside. The deck rises and falls with the liquid level and either floats directly on the liquid surface (contact deck) or rests on pontoons several inches above the liquid surface (non-contact deck). The terms "deck" and "floating roof" can be used interchangeably in reference to the structure floating on the liquid inside the tank. There are two basic types of internal floating roof tanks, tanks in which the fixed roof is supported by vertical columns within the tank, and tanks with a self-supporting fixed roof and no internal support columns. Fixed roof tanks that have been retrofitted to employ a floating deck are typically of the first type, while external floating roof tanks typically have a self-supporting roof when converted to an internal floating roof tank. Tanks initially constructed with both a fixed roof and a floating deck may be of either type.

The deck serves to restrict evaporation of the organic liquid stock. Evaporation losses from decks may come from deck fittings, nonwelded deck seams, and the annular space between the deck and tank wall. Typical contact deck and noncontact deck internal floating roof tanks are shown in

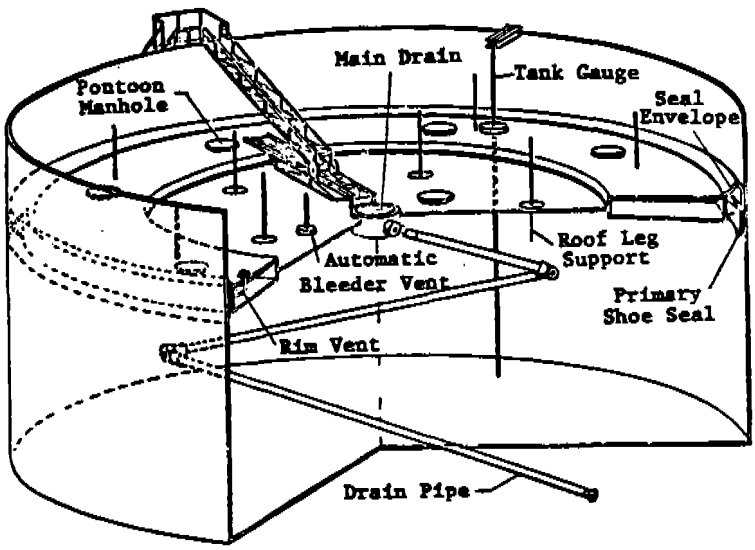

Figure 4.3-2. External floating roof tank.[1]

Figure 4.3-3. Contact decks can be aluminum sandwich panels with a honeycomb aluminum core floating in contact with the liquid, or pan steel decks floating in contact with the liquid, with or without pontoons. Typical noncontact decks have an aluminum deck or an aluminum grid framework supported above the liquid surface by tubular aluminum pontoons or other bouyant structures. Both types of deck incorporate rim seals, which slide against the tank wall as the deck moves up and down. In addition, these tanks are freely vented by circulation vents at the top of the fixed roof. The vents minimize the possibility of organic vapor accumulation in concentrations approaching the flammable range. An internal floating roof tank not freely vented is considered a pressure tank.

Pressure Tanks - There are two classes of pressure tanks in general use, low pressure (2.5 to 15 psig) and high pressure (higher than 15 psig). Pressure tanks generally are used for storage of organic liquids and gases with high vapor pressures and are found in many sizes and shapes, depending on the operating pressure of the tank. Pressure tanks are equipped with a pressure/vacuum vent that is set to prevent venting loss from boiling and breathing loss from daily temperature or barometric pressure changes. High pressure storage tanks can be operated so that virtually no evaporative or working losses occur. In low pressure tanks, working losses can occur with atmospheric venting of the tank during filling operations.

Variable Vapor Space Tanks - Variable vapor space tanks are equipped with expandable vapor reservoirs to accomodate vapor volume fluctuations attributable to temperature and barometric pressure changes. Although variable vapor space tanks are sometimes used independently, they are normally connected to the vapor spaces of one or more fixed roof tanks. The two most common types of variable vapor space tanks are lifter roof tanks and flexible diaphragm tanks.

Lifter roof tanks have a telescoping roof that fits loosely around the outside of the main tank wall. The space between the roof and the wall is closed by either a wet seal, which is a trough filled with liquid, or a dry seal, which uses a flexible coated fabric.

Flexible diaphragm tanks use flexible membranes to provide expandable volume. They may be either separate gasholder units or integral units mounted atop fixed roof tanks.

4.3.2 Emissions And Controls

Emission sources from organic liquids in storage depend upon the tank type. Fixed roof tank emission sources are breathing loss and working loss. External or internal floating roof tank emission sources are standing storage loss and withdrawal loss. Standing storage loss includes rim seal loss, deck fitting loss and deck seam loss. Pressure tanks and variable vapor space tanks are also emission sources.

Fixed Roof Tanks - Two significant types of emissions from fixed roof tanks are breathing loss and working loss. Breathing loss is the expulsion of vapor from a tank through vapor expansion and contraction, which are the results of changes in temperature and barometric pressure. This loss occurs without any liquid level change in the tank.

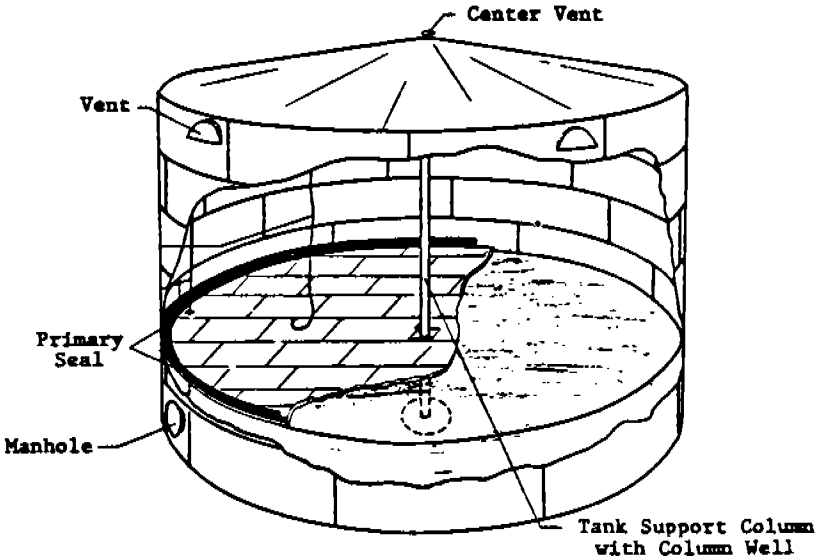

Contact Deck Type

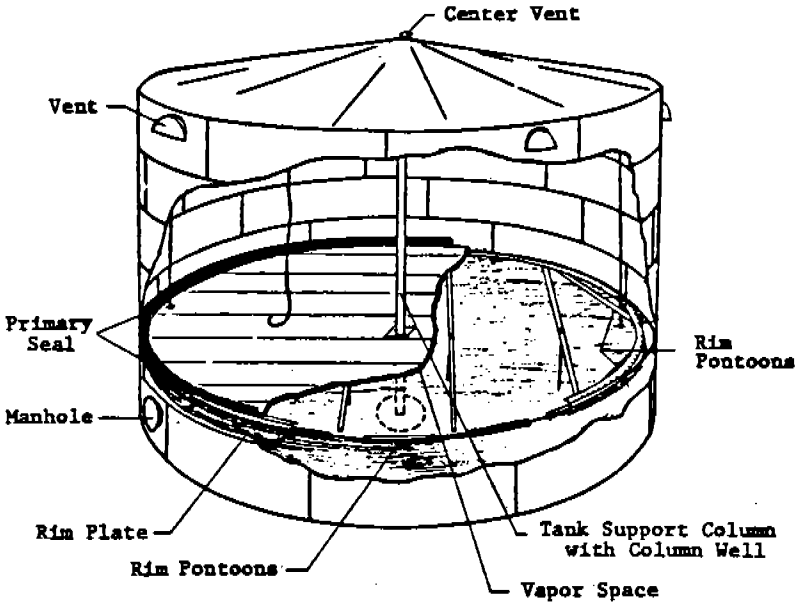

Noncontact Deck Type

Figure 4.3-3. Internal floating roof tanks.[1]

The combined loss from filling and emptying is called working loss. Filling loss comes with an increase of the liquid level in the tank, when the pressure inside the tank exceeds the relief pressure and vapors are expelled from the tank. Emptying loss occurs when air drawn into the tank during liquid removal becomes saturated with organic vapor and expands, thus exceeding the capacity of the vapor space.

The following equations, provided to estimate emissions, are applicable to tanks with vertical cylindrical shells and fixed roofs. These tanks must be substantially liquid and vapor tight and must operate approximately at atmospheric pressure. Fixed roof tank breathing losses can be estimated from[2]:

$$L_B = 2.26 \times 10^{-2} M_V \left(\frac{P}{P_A - P} \right)^{0.68} D^{1.73} H^{0.51} \Delta T^{0.50} F_P C K_C \qquad (1)$$

where:

L_B = fixed roof breathing loss (lb/yr)

M_V = molecular weight of vapor in storage tank (lb/lb mole), see Note 1

P_A = average atmospheric pressure at tank location (psia)

P = true vapor pressure at bulk liquid conditions (psia), see Note 2

D = tank diameter (ft)

H = average vapor space height, including roof volume correction (ft), see Note 3

ΔT = average ambient diurnal temperature change (°F)

F_P = paint factor (dimensionless), see Table 4.3-1

C = adjustment factor for small diameter tanks (dimensionless), see Figure 4.3-4

K_C = product factor (dimensionless), see Note 4

Notes: (1) The molecular weight of the vapor, M_V, can be determined by Table 4.3-2 for selected petroleum liquids and volatile organic liquids or by analysis of vapor samples. Where mixtures of organic liquids are stored in a tank, M_V can be estimated from the liquid composition. As an example of the latter calculation, consider a liquid known to be composed of components A and B with mole fractions in the liquid X_a and X_b, respectively. Given the vapor pressures of the pure

TABLE 4.3-1. PAINT FACTORS FOR FIXED ROOF TANKS[a]

Tank color		Paint factors (F_p)	
		Paint condition	
Roof	Shell	Good	Poor
White	White	1.00	1.15
Aluminum (specular)	White	1.04	1.18
White	Aluminum (specular)	1.16	1.24
Aluminum (specular)	Aluminum (specular)	1.20	1.29
White	Aluminum (diffuse)	1.30	1.38
Aluminum (diffuse)	Aluminum (diffuse)	1.39	1.46
White	Gray	1.30	1.38
Light gray	Light gray	1.33	1.44[b]
Medium gray	Medium gray	1.40	1.58[b]

[a]Reference 2.
[b]Estimated from the ratios of the seven preceding paint factors.

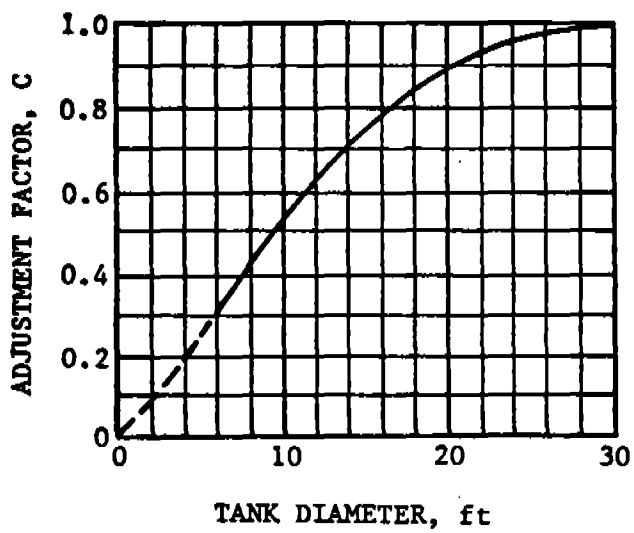

Figure 4.3-4. Adjustment factor (C) for small diameter tanks.[2]

TABLE 4.3-2. PHYSICAL PROPERTIES OF TYPICAL ORGANIC LIQUIDS[a]

Organic liquid[b]	Vapor molecular weight @ 60°F	Product density (d), lb/gal @ 60°F	Condensed vapor density (w), lb/gal @ 60°F	True vapor pressure in psia at: 40°F	50°F	60°F	70°F	80°F	90°F	100°F
Petroleum Liquids[c]										
Gasoline RVP 13	62	5.6	4.9	4.7	5.7	6.9	8.3	9.9	11.7	13.8
Gasoline RVP 10	66	5.6	5.1	3.4	4.2	5.2	6.2	7.4	8.8	10.5
Gasoline RVP 7	68	5.6	5.2	2.3	2.9	3.5	4.3	5.2	6.2	7.4
Crude oil RVP 5	50	7.1	4.5	1.8	2.3	2.8	3.4	4.0	4.8	5.7
Jet naphtha (JP-4)	80	6.4	5.4	0.8	1.0	1.3	1.6	1.9	2.4	2.7
Jet kerosene	130	7.0	6.1	0.0041	0.0060	0.0085	0.011	0.015	0.021	0.029
Distillate fuel no. 2	130	7.1	6.1	0.0031	0.0045	0.0074	0.0090	0.012	0.016	0.022
Residual oil no. 6	190	7.9	6.4	0.00002	0.00003	0.00004	0.00006	0.00009	0.00013	0.00019
Volatile Organic Liquids										
Acetone	58	6.6	6.6	1.7	2.2	2.9	3.7	4.7	5.9	7.3
Acrylonitrile	53	6.8	6.8	0.8	1.0	1.4	1.8	2.4	3.1	4.0
Benzene	78	7.4	7.4	0.6	0.9	1.2	1.5	2.0	2.6	3.3
Carbon disulfide	76	10.6	10.6	3.0	3.9	4.8	6.0	7.4	9.2	11.2
Carbon tetrachloride	154	13.4	13.4	0.8	1.1	1.4	1.8	2.3	3.0	3.8
Chloroform	119	12.5	12.5	1.5	1.9	2.5	3.2	4.1	5.2	6.3
Cyclohexane	84	6.5	6.5	0.7	0.9	1.2	1.6	2.1	2.6	3.2
1,2-Dichloroethane	99	10.5	10.5	0.6	0.8	1.0	1.4	1.7	2.2	2.8
Ethylacetate	88	7.6	7.6	0.6	0.8	1.1	1.5	1.9	2.5	3.2
Ethyl alcohol	46	6.6	6.6	0.2	0.4	0.6	0.9	1.2	1.7	2.3
Isopropyl alcohol	60	6.6	6.6	0.2	0.3	0.6	0.7	0.9	1.3	1.8
Methyl alcohol	32	6.6	6.6	0.7	1.0	1.4	2.0	2.6	3.5	4.5
Methylene chloride	85	11.1	11.1	3.1	4.3	5.4	6.8	8.7	10.3	13.3
Methylethyl ketone	72	6.7	6.7	0.7	0.9	1.2	1.5	2.1	2.7	3.3
Methylmethacrylate	100	7.9	7.9	0.1	0.2	0.3	0.6	0.8	1.1	1.4
1,1,1-Trichloroethane	133	11.2	11.2	0.9	1.2	1.6	2.0	2.6	3.3	4.2
Trichloroethylene	131	12.3	12.3	0.5	0.7	0.9	1.2	1.5	2.0	2.0
Toluene	92	7.3	7.3	0.2	0.2	0.3	0.4	0.6	0.8	1.0
Vinylacetate	86	7.8	7.8	0.7	1.0	1.3	1.7	2.3	3.1	4.0

[a]References 3-4.
[b]For a more comprehensive listing of volatile organic liquids, see Reference 3.
[c]RVP = Reid vapor pressure in psia.

components, P_a and P_b, and the molecular weights of the pure components, M_a and M_b, M_V is calculated:

$$M_V = M_a \left(\frac{P_a X_a}{P_t} \right) + M_b \left(\frac{P_b X_b}{P_t} \right)$$

where: P_t, by Raoult's law, is:

$$P_t = P_a X_a + P_b X_b$$

(2) True vapor pressures for organic liquids can be determined from Figures 4.3-5 or 4.3-6, or Table 4.3-2. In order to use Figures 4.3-5 or 4.3-6, the stored liquid temperature, T_S, must be determined in degrees Fahrenheit. T_S is determined from Table 4.3-3, given the average annual ambient temperature, T_A, in degrees Fahrenheit. True vapor pressure is the equilibrium partial pressure exerted by a volatile organic liquid, as defined by ASTM-D-2879 or as obtained from standard reference texts. Reid vapor pressure is the absolute vapor pressure of volatile crude oil and volatile nonviscous petroleum liquids, except liquified petroleum gases, as determined by ASTM-D-323.

(3) The vapor space in a cone roof is equal in volume to a cylinder, which has the same base diameter as the cone and is one third the height of the cone. If information is not available, assume H equals one half tank height.

(4) For crude oil, $K_C = 0.65$. For all other organic liquids, $K_C = 1.0$.

Fixed roof tank working losses can be estimated from[2]:

$$L_W = 2.40 \times 10^{-5} M_V P V N K_N K_C \qquad (2)$$

where:

L_W = fixed roof working loss (lb/year)

M_V = molecular weight of vapor in storage tank (lb/lb mole), see Note 1 to Equation 1

P = true vapor pressure at bulk liquid temperature (psia), see Note 2 to Equation 1

V = tank capacity (gal)

N = number of turnovers per year (dimensionless)

$$N = \frac{\text{Total throughput per year (gal)}}{\text{Tank capacity, V (gal)}}$$

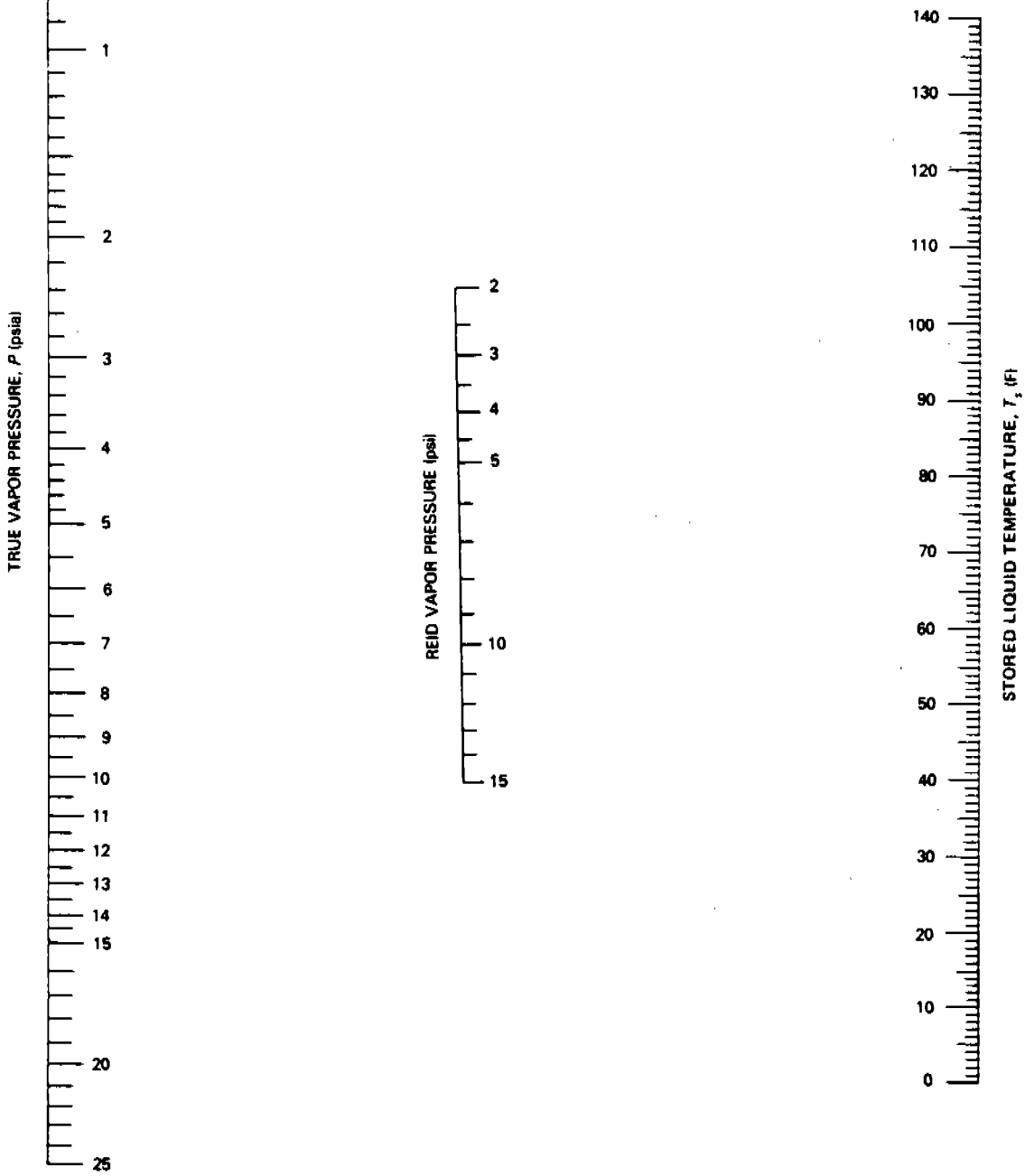

Figure 4.3-5. True vapor pressure (P) of crude oils (2-15 psi RVP).[6]

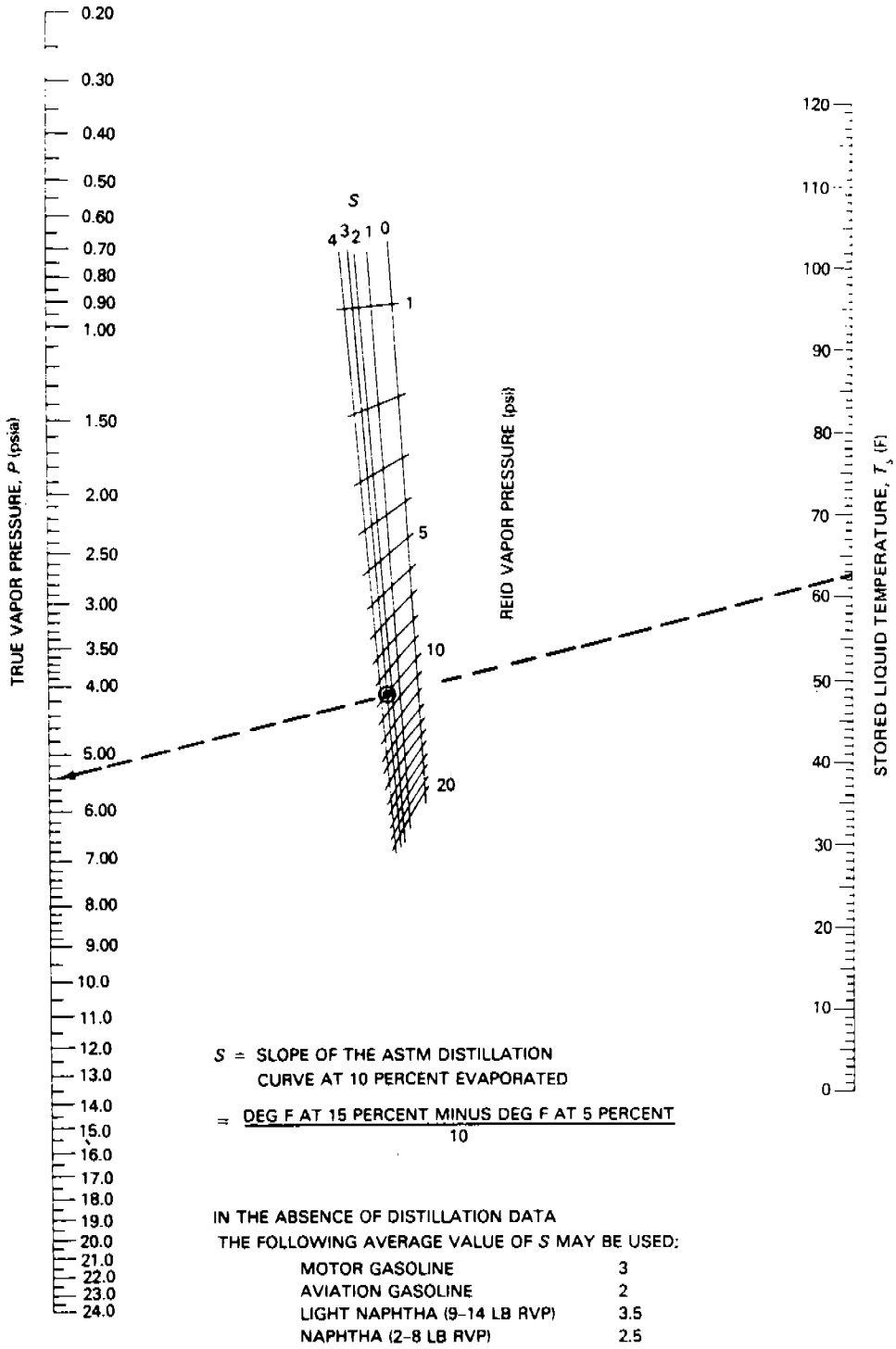

NOTE: Dashed line illustrates sample problem for RVP = 10 pounds per square inch, gasoline (S = 3), and T_s = 62.5 F.
SOURCE: Nomograph drawn from the data of the National Bureau of Standards.

Figure 4.3-6. True vapor presure (P) of refined petroleum liquids like gasoline and napththas (1-20 psi RVP).[6]

K_N = turnover factor (dimensionless), see Figure 4.3-7

K_C = product factor (dimensionless), see Note 1

Note: (1) For crude oil, K_C = 0.84. For all other organic liquids, K_C = 1.0.

TABLE 4.3-3. AVERAGE STORAGE TEMPERATURE (T_S) AS A FUNCTION OF TANK PAINT COLOR[a]

Tank color	Average storage temperature, T_S
White	T_A[b] + 0
Aluminum	T_A + 2.5
Gray	T_A + 3.5
Black	T_A + 5.0

[a]Reference 5.
[b]T_A is the average annual ambient temperature in degrees Fahrenheit.

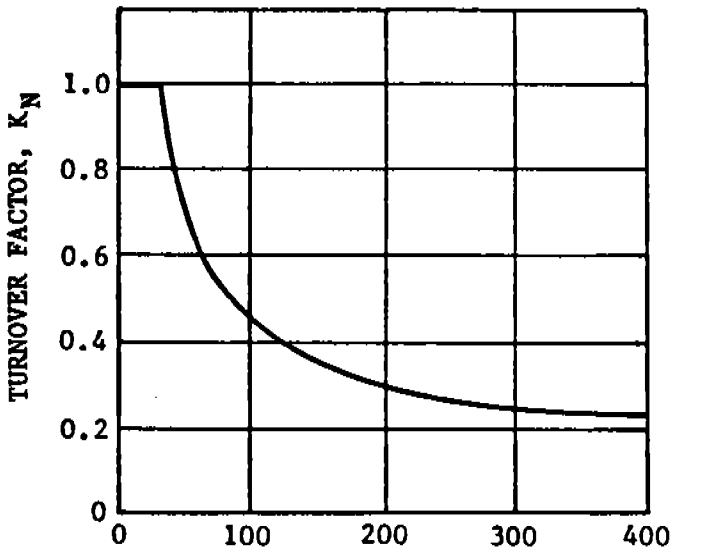

TURNOVERS PER YEAR = $\frac{\text{ANNUAL THROUGHPUT}}{\text{TANK CAPACITY}}$

Note: For 36 turnovers per year or less, K_N = 1.0

Figure 4.3-7. Turnover factor (K_N) for fixed roof tanks.

Several methods are used to control emissions from fixed roof tanks. Emissions from fixed roof tanks can be controlled by the installation of an internal floating roof and seals to minimize evaporation of the product being stored. The control efficiency of this method ranges from 60 to 99 percent, depending on the type of roof and seals installed and on the type of organic liquid stored.

The vapor recovery system collects emissions from storage vessels and converts them to liquid product. Several vapor recovery procedures may be used, including vapor/liquid absorption, vapor compression, vapor cooling, vapor/solid adsorption, or a combination of these. The overall control efficiencies of vapor recovery systems are as high as 90 to 98 percent, depending on the method used, the design of the unit, the composition of vapors recovered, and the mechanical condition of the system.

Another method of emission control on fixed roof tanks is thermal oxidation. In a typical thermal oxidation system, the air/vapor mixture is injected through a burner manifold into the combustion area of an incinerator. Control efficiencies for this system can range from 96 to 99 percent.

External And Internal Floating Roof Tanks - Total emissions from floating roof tanks are the sum of standing storage losses and withdrawal losses. Standing storage loss from internal floating roof tanks includes rim seal, deck fitting, and deck seam losses. Standing storage loss from external floating roof tanks, as discussed here, includes only rim seal loss, since deck fitting loss equations have not been developed. There is no deck seam loss, because the decks have welded sections.

Standing storage loss from external floating roof tanks, the major element of evaporative loss, results from wind induced mechanisms as air flows across the top of an external floating roof tank. These mechanisms may vary, depending upon the type of seals used to close the annular vapor space between the floating roof and the tank wall. Standing storage emissions from external floating roof tanks are controlled by one or two separate seals. The first seal is called the primary seal, and the other, mounted above the primary seal, is called the secondary seal. There are three basic types of primary seals used on external floating roofs, mechanical (metallic shoe), resilient (nonmetallic), and flexible wiper. The resilient seal can be mounted to eliminate the vapor space between the seal and liquid surface (liquid mounted), or to allow a vapor space between the seal and liquid surface (vapor mounted). A primary seal serves as a vapor conservation device by closing the annular space between the edge of the floating roof and the tank wall. Some primary seals are protected by a metallic weather shield. Additional evaporative loss may be controlled by a secondary seal. Secondary seals can be either flexible wiper seals or resilient filled seals. Two configurations of secondary seal are currently available, shoe mounted and rim mounted. Although there are other seal system designs, the systems described here compose the majority in use today. See Figure 4.3-8 for examples of primary and secondary seal configurations.

Typical internal floating roofs generally incorporate two types of primary seals, resilient foam filled seals and wipers. Similar in design

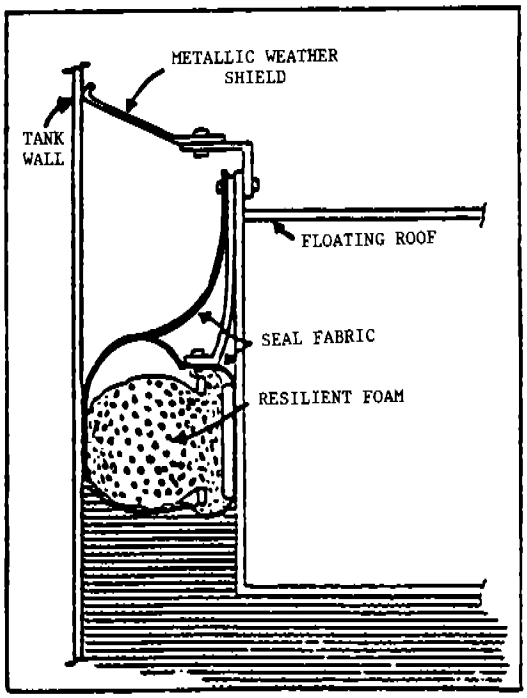

a. Liquid mounted seal with weather shield.

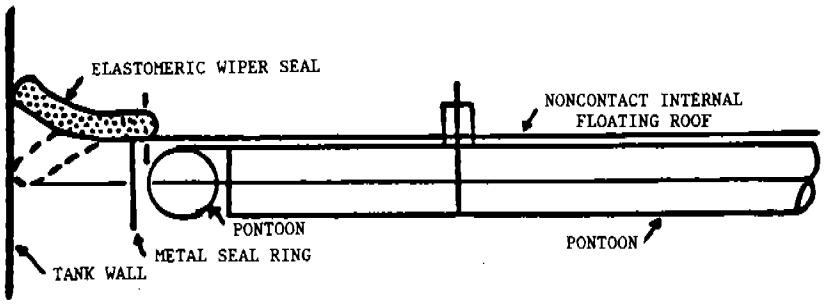

b. Elastomeric wiper seal.

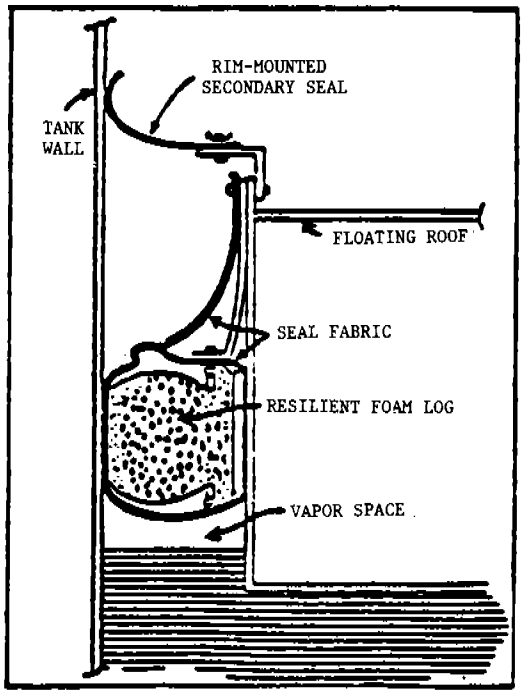

c. Vapor mounted seal with rim mounted secondary seal.

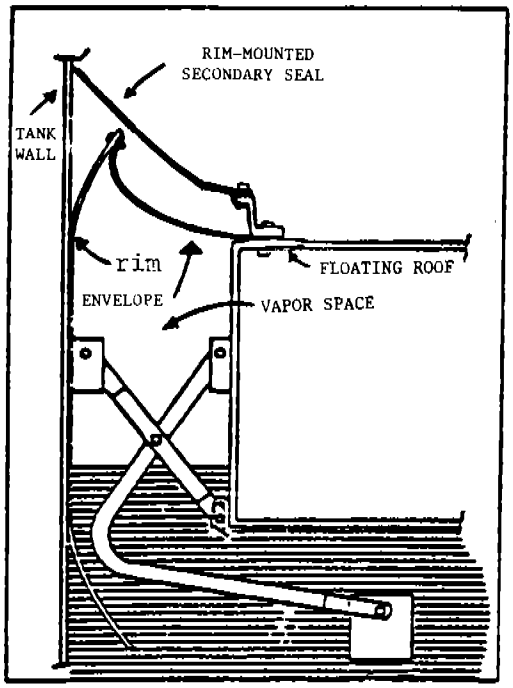

d. Metallic shoe seal with shoe mounted secondary seal.

Figure 4.3-8. Primary and secondary seal configurations.[1]

to those in external floating roof tanks, these seals close the annular vapor space between the edge of the floating roof and the tank wall. Secondary seals are not commonly used with internal floating roof tanks.

Deck fitting loss emissions from internal floating roof tanks result from penetrations in the roof by deck fittings, fixed roof column supports or other openings. There are no procedures for estimating emissions from external roof tank deck fittings. The most common fittings with relevance to controllable vapor losses are described as follows:[1]

1. Access Hatch. An access hatch is an opening in the deck with a peripheral vertical well that is large enough to provide passage of workers and materials through the deck for construction or servicing. Attached to the opening is a removable cover which may be bolted and/or gasketed to reduce evaporative loss. On noncontact decks, the well should extend down into the liquid to seal off the vapor space below the deck.

2. Automatic Gauge Float Well. A gauge float is used to indicate the level of liquid within the tank. The float rests on the liquid surface, inside a well that is closed by a cover. The cover may be bolted and/or gasketed to reduce evaporation loss. As with other similar deck penetrations, the well extends fixed into the liquid on noncontact decks.

3. Column Well. For fixed roofs that are column-supported, the columns pass through deck openings with peripheral vertical wells. On noncontact decks, the well should extend down into the liquid. The wells are equipped with closure devices to reduce evaporative loss and may be gasketed or ungasketed to further reduce the loss. Closure devices are typically sliding covers or flexible fabric sleeve seals.

4. Ladder Well. Some tanks are equipped with internal ladders that extend from a manhole in the fixed roof to the tank bottom. The deck opening through which the ladder passes has a peripheral vertical well. On noncontact decks, the well should extend down into the liquid. The wells are typically covered with a gasketed or ungasketed sliding cover.

5. Roof Leg or Hanger Well. To prevent damage to fittings underneath the deck and to allow for tank cleaning or repair, supports are provided to hold the deck a predetermined distance off the tank bottom. These supports consist of adjustable or fixed legs attached to the floating deck or hangers suspended from the fixed roof. For adjustable legs or hangers, the load-carrying element passes through a well or sleeve into the deck. With noncontact decks, the well should extend into the liquid.

6. Sample Pipe or Well. A funnel-shaped sample well may be provided to allow for sampling of the liquid with a sample thief. A closure is typically located at the lower end of the funnel and frequently consists of a horizontal piece of fabric slit radially to allow thief entry. The well should extend into the liquid on noncontact decks. Alternatively, a sample well may consist of a slottled pipe extending into the liquid, equipped with a gasketed or ungasketed sliding cover.

7. Vacuum Breaker. A vacuum breaker equalizes the pressure of the vapor space across the deck as the deck is either being landed on or floated off its legs. The vacuum breaker consists of a well with a cover. Attached to the underside of the cover is a guided leg of such length that it contacts the tank bottom as the internal floating deck approaches. When in contact with the tank bottom, the guided leg mechanically opens the breaker by lifting the cover off the well; otherwise, the cover closes the well. The closure may be gasketed or ungasketed. Because the purpose of the vacuum breaker is to allow the free exchange of air and/or vapor, the well does not extend appreciably below the deck.

The decks of internal floating roofs typically are made by joining several sections of deck material, resulting in seams in the deck. To the extent that these seams are not completely vapor tight, they become a source of emissions. It should be noted that external floating roof tanks and welded internal floating roofs do not have deck seam losses.

Withdrawal loss is another source of emissions from floating roof tanks. This loss is the vaporization of liquid that clings to the tank wall and is exposed to the atmosphere when a floating roof is lowered by withdrawal of liquid. There is also clingage of liquid to columns in internal floating roof tanks which have a column supported fixed roof.

Total Losses From Floating Roof Tanks - Total floating roof tank emissions are the sum of rim seal, withdrawal, deck fitting, and deck seam losses. It should be noted that external floating roof tanks and welded internal floating roofs do not have deck seam losses. Also, there are no procedures for estimating emissions from external floating roof tank deck fittings. The equations provided in this Section are applicable only to freely vented internal floating roof tanks or external floating roof tanks. The equations are not intended to be used in the following applications: to estimate losses from closed internal floating roof tanks (tanks vented only through a pressure-vacuum vent); to estimate losses from unstabilized or boiling stocks or from mixtures of hydrocarbons or petrochemicals for which the vapor pressure is not known or cannot be readily predicted; or to estimate losses from tanks in which the materials used in the seal system and/or deck construction are either deteriorated or significantly permeated by the stored liquid.[6] Total losses may be written as:

$$L_T = L_R + L_W + L_F + L_D \qquad (3)$$

where:

L_T = total loss (lb/yr)

L_R = rim seal loss (see Equation 4)

L_W = withdrawal loss (see Equation 5)

L_F = deck fitting loss (see Equation 6)

L_D = deck seam loss (see Equation 7)

Rim Seal Loss - Rim seal loss from floating roof tanks can be estimated by the following equation[5-6]:

$$L_R = K_S V^n P^* D M_V K_C \tag{4}$$

where:

L_R = rim seal loss (lb/yr)

K_S = seal factor (lb-mole/(ft (mi/hr)^n yr)), see Table 4.3-4

V = average wind speed at tank site (mi/hr), see Note 1

n = seal related wind speed exponent (dimensionless), see Table 4.3-4

P^* = vapor pressure function (dimensionless), see Note 2

$$P^* = \frac{\frac{P}{P_A}}{\left[1 + \left(1 - \frac{P}{P_A}\right)^{0.5}\right]^2}$$

where:

P = true vapor pressure at average actual liquid storage temperature (psia), see Note 2 to Equation 1

P_A = average atmospheric pressure at tank location (psia)

D = tank diameter (ft)

M_V = average vapor molecular weight (lb/lb-mole), see Note 1 to Equation 1

K_C = product factor (dimensionless), see Note 3

Notes:

(1) If the wind speed at the tank site is not available, wind speed data from the nearest local weather station may be used as an approximation.

(2) P^* can be calculated or read directly from Figure 4.3-9.

(3) For all organic liquids except crude oil, K_C = 1.0. For crude oil, K_C = 0.4.

Withdrawal Loss - The withdrawal loss from floating roof storage tanks can be estimated using Equation 5.[5-6]

$$L_W = \frac{(0.943)QCW_L}{D}\left[1 + \left(\frac{N_C F_C}{D}\right)\right] \tag{5}$$

TABLE 4.3-4. SEAL RELATED FACTORS FOR FLOATING ROOF TANKS[a]

Tank and seal type	Welded Tank K_S	Welded Tank n	Riveted Tank K_S	Riveted Tank n
External floating roof tanks[b]				
Metallic shoe seal				
Primary seal only	1.2	1.5	1.3	1.5
With shoe mounted secondary seal	0.8	1.2	1.4	1.2
With rim mounted secondary seal	0.2	1.0	0.2	1.6
Liquid mounted resilient seal				
Primary seal only	1.1	1.0	NA[c]	NA
With weather shield	0.8	0.9	NA	NA
With rim mounted secondary seal	0.7	0.4	NA	NA
Vapor mounted resilient seal				
Primary seal only	1.2	2.3	NA	NA
With weather shield	0.9	2.2	NA	NA
With rim mounted secondary seal	0.2	2.6	NA	NA
Internal floating roof tanks[d]				
Liquid mounted resilient seal				
Primary seal only	3.0	0	NA	NA
With rim mounted secondary seal[e]	1.6	0	NA	NA
Vapor mounted resilient seal				
Primary seal only	6.7	0	NA	NA
With rim mounted secondary seal[e]	2.5	0	NA	NA

[a]Based on emissions from tank seal systems in reasonably good working condition, no visible holes, tears, or unusually large gaps between the seals and the tank wall. The applicability of K_s decreases in cases where the actual gaps exceed the gaps assumed during development of the correlation.
[b]Reference 5.
[c]NA = Not Applicable.
[d]Reference 6.
[e]If tank specific information is not available about the secondary seal on an internal floating roof tank, then assume only a primary seal is present.

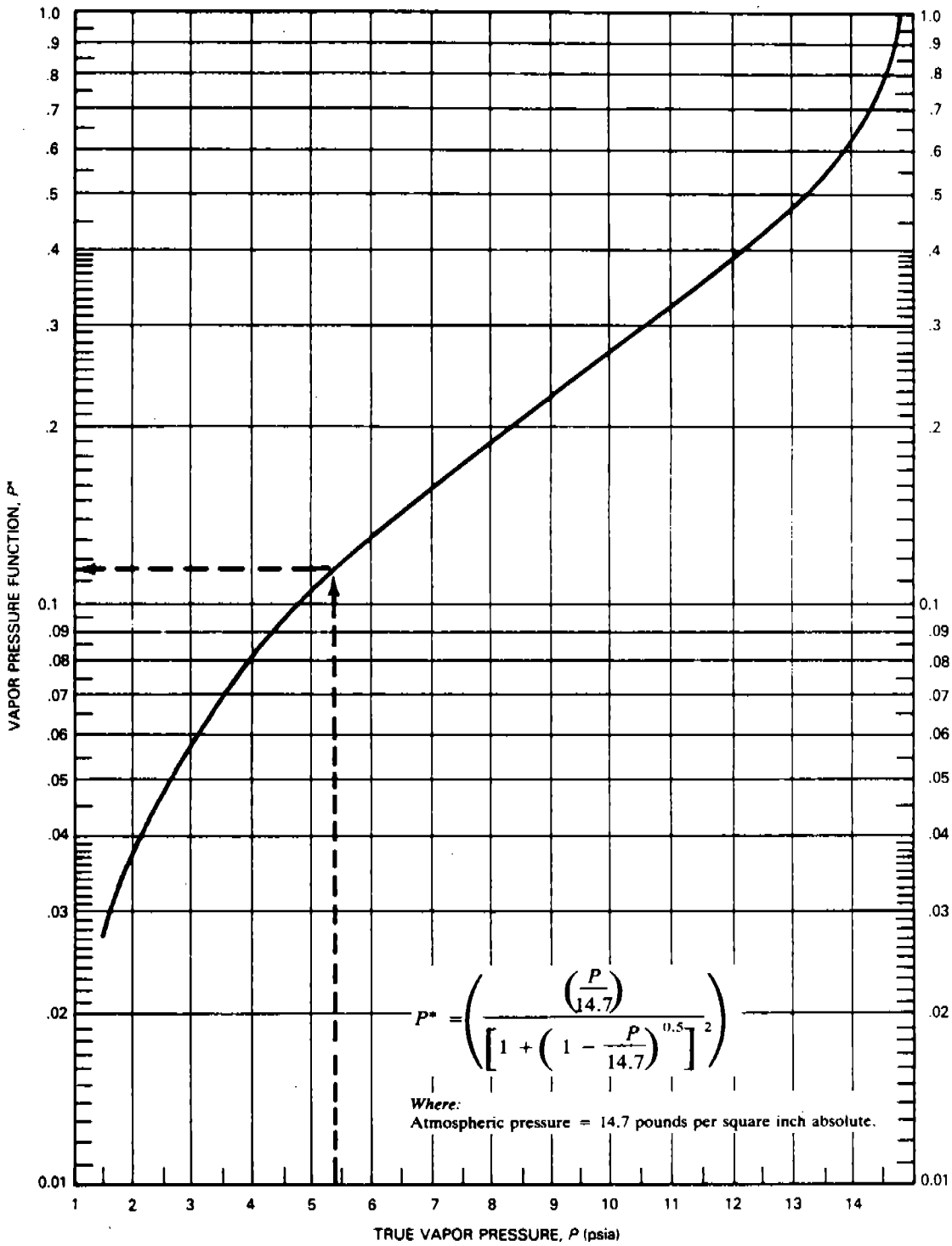

NOTE: Dashed line illustrates sample problem for P = 5.4 pounds per square inch absolute.

Figure 4.3-9. Vapor pressure function (P*).[5]

where:

L_W = withdrawal loss (lb/yr)

Q = throughput (bbl/year) (tank capacity [bbl] times annual turnover rate)

C = shell clingage factor (bbl/1,000 ft^2), see Table 4.3-5

W_L = average organic liquid density (lb/gal), see Note 1

D = tank diameter (ft)

N_C = number of columns (dimensionless), see Note 3

F_C = effective column diameter (ft) [column perimeter (ft)/π], see Note 4

Notes: (1) If W_L is not known, an average value of 5.6 lb/gallon can be assumed for gasoline. An average value cannot be assumed for crude oil, since densities are highly variable.

(2) The constant, 0.943, has dimensions of (1,000 ft^3 x gal/bbl^2).

(3) For self-supporting fixed roof or an external floating roof tank:

$$N_C = 0.$$

For column supported fixed roof:

N_C = use tank specific information, or see Table 4.3-6.

(4) Use tank specific effective column diameter; or

F_C = 1.1 for 9 inch by 7 inch builtup columns,
0.7 for 8 inch diameter pipe columns, and
1.0 if column construction details are not known.

Deck Fitting Loss - Deck fitting loss estimation procedures for external floating roof tanks are not available. Therefore, the following procedure applies only to internal floating roof tanks.

Fitting losses from internal floating roof tanks can be estimated by the following equation[6]:

$$L_F = F_F \; P^* M_V K_C \qquad (6)$$

TABLE 4.3-5. AVERAGE CLINGAGE FACTORS (C) (bbl/1,000 ft^2)[a]

Liquid	Shell condition		
	Light rust[b]	Dense rust	Gunite lined
Gasoline	0.0015	0.0075	0.15
Single component stocks	0.0015	0.0075	0.15
Crude oil	0.0060	0.030	0.60

[a]Reference 5.
[b]If no specific information is available, these values can be assumed to represent the most common condition of tanks currently in use.

TABLE 4.3-6. TYPICAL NUMBER OF COLUMNS AS A FUNCTION OF TANK DIAMETER FOR INTERNAL FLOATING ROOF TANKS WITH COLUMN SUPPORTED FIXED ROOFS[a]

Tank diameter range D (ft)	Typical number of columns, N_C
$0 < D \leq 85$	1
$85 < D \leq 100$	6
$100 < D \leq 120$	7
$120 < D \leq 135$	8
$135 < D \leq 150$	9
$150 < D \leq 170$	16
$170 < D \leq 190$	19
$190 < D \leq 220$	22
$220 < D \leq 235$	31
$235 < D \leq 270$	37
$270 < D \leq 275$	43
$275 < D \leq 290$	49
$290 < D \leq 330$	61
$330 < D \leq 360$	71
$360 < D \leq 400$	81

[a]Reference 1. This table was derived from a survey of users and manufacturers. The actual number of columns in a particular tank may vary greatly with age, fixed roof style, loading specifications, and manufacturing perogatives. Data in this table should not supersede information on actual tanks.

where:

L_F = the fitting loss in pounds per year

F_F = total deck fitting loss factor (lb-mole/yr)

$= [(N_{F_1} \quad K_{F_1}) + N_{F_2} \; K_{F_2}) + \; . \; . \; .+ (N_{F_n} \quad K_{F_n})]$

where:

N_{F_i} = number of deck fittings of a particular type (i = 0,1,2,...,n) (dimensionsless)

K_{F_i} = deck fitting loss factor for a particular type fitting (i = 0,1,2,...,n) (lb-mole/yr)

n = total number of different types of fittings (dimensionless)

P^*, M_V, K_C = as defined for Equation 4

The value of F_F may be calculated by using actual tank specific data for the number of each fitting type (N_F) and then multiplying by the fitting loss factor for each fitting (K_F).[1] Values of fitting loss factors and typical number of fittings are presented in Table 4.3-7. Where tank specific data for the number and kind of deck fittings are unavailable, then F_F can be approximated according to tank diameter. Figures 4.3-10 and 4.3-11 present F_F plotted against tank diameter for column supported fixed roofs and self-supporting fixed roofs, respectively.

Deck Seam Loss - Deck seam loss applies only to internal floating roof tanks with bolted decks. External floating roofs have welded decks and, therefore, no deck seam loss. Deck seam loss can be estimated by the following equation:[6]

$$L_D = K_D S_D D^2 P^* M_V K_C \qquad (7)$$

where

L_D = deck seam losses (lb/yr)

K_D = deck seam loss per unit seam length factor (lb-mole/ft yr)

= 0.0 for welded deck and external floating roof tanks, 0.34 for bolted deck

S_D = deck seam length factor (ft/ft^2)

$$= \frac{L_{seam}}{A_{deck}}$$

TABLE 4.3-7. SUMMARY OF INTERNAL FLOATING DECK FITTING LOSS FACTORS (K_F) AND TYPICAL NUMBER OF FITTINGS (N_F)[a]

Deck fitting type	Deck fitting loss factor, K_F (lb-mole/yr)	Typical number of fittings, N_F
Access hatch		1
Bolted cover, gasketed	1.6	
Unbolted cover, gasketed	11	
Unbolted cover, ungasketed	25[b]	
Automatic gauge float well		1
Bolted cover, gasketed	5.1	
Unbolted cover, gasketed	15	
Unbolted cover, ungasketed	28[b]	
Column well		(see Table 4.3-6)
Builtup column-sliding cover, gasketed	33	
Builtup column-sliding cover, ungasketed	47[b]	
Pipe column-flexible fabric sleeve seal	10	
Pipe column-sliding cover, gasketed	19	
Pipe column-sliding cover, ungasketed	32	
Ladder well		1
Sliding cover, gasketed	56	
Sliding cover, ungasketed	76[b]	
Roof leg or hanger well		$(5 + \frac{D}{10} + \frac{D^2}{600})$[c]
Adjustable	7.9[b]	
Fixed	0	
Sample pipe or well		1
Slotted pipe-sliding cover, gasketed	44	
Slotted pipe-sliding cover, ungasketed	57	
Sample well-slit fabric seal, 10% open area	12[b]	
Stub drain, 1 inch diameter[d]	1.2	$(\frac{D^2}{125})$[c]
Vacuum breaker		1
Weighted mechanical actuation, gasketed	0.7[b]	
Weighted mechanical actuation, ungasketed	0.9	

[a]Reference 1.
[b]If no specific information is available, this value can be assumed to represent the most common/typical deck fittings currently used.
[c]D = tank diameter (ft).
[d]Not used on welded contact internal floating decks.

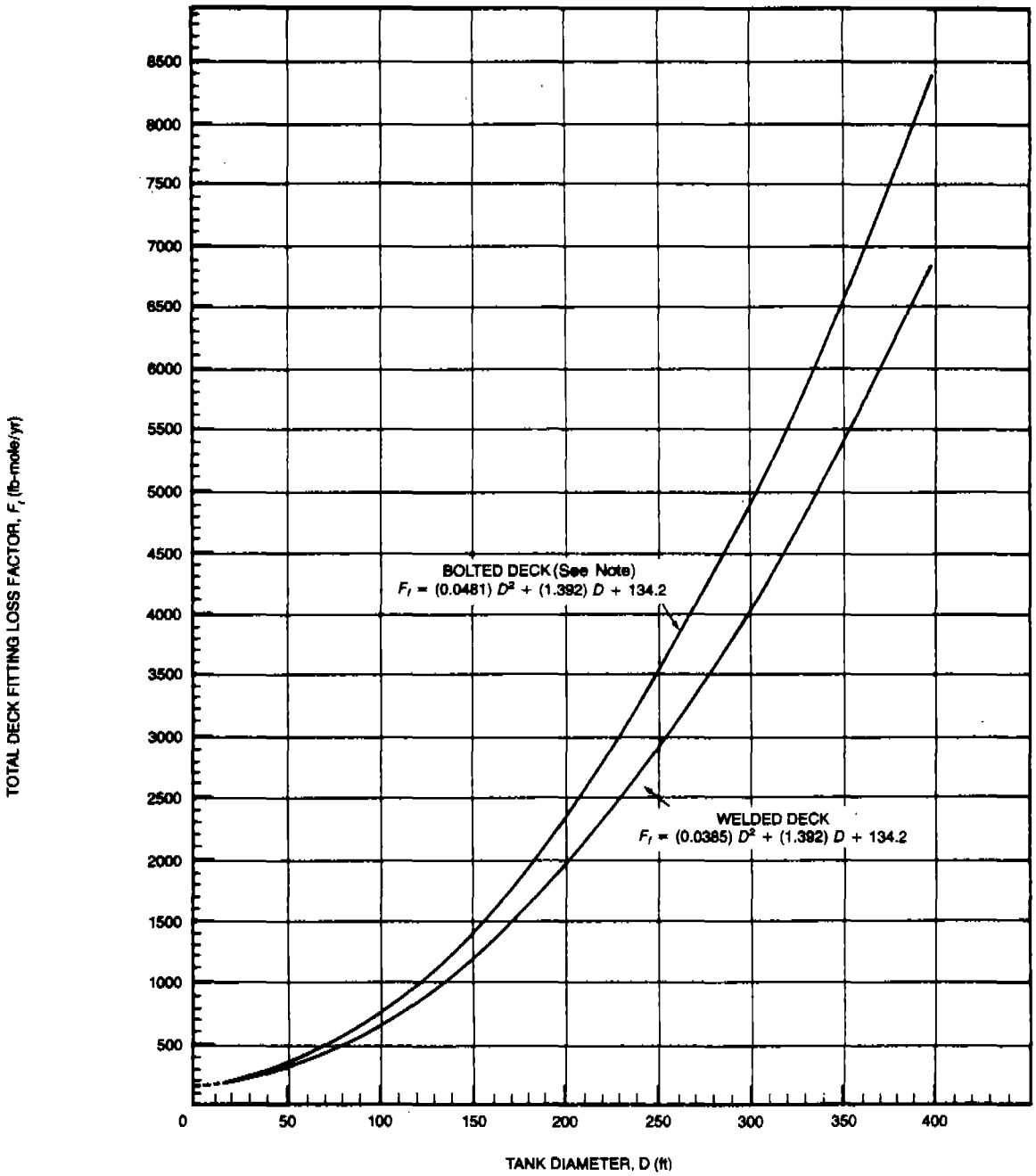

BASIS: Fittings include: (1) access hatch, with ungasketed, unbolted cover; (2) built-up column wells, with ungasketed, sliding cover; (3) adjustable deck legs; (4) gauge float well, with ungasketed, unbolted cover; (5) ladder well, with ungasketed sliding cover; (6) sample well, with slit fabric seal (10 percent open area); (7) 1-inch diameter stub drains (only on bolted deck); and (8) vacuum breaker, with gasketed weighted mechanical actuation. This basis was derived from a survey of users and manufacturers. Other fittings may be typically used within particular companies or organizations to reflect standards and/or specifications of that group. This figure should not supersede information based on actual tank data.

NOTE: If no specific information is available, assume bolted decks are the most common/typical type currently in use in tanks with column-supported fixed roofs.

Figure 4.3-10. Approximated total deck fitting loss factors (F_f) for typical fittings in tanks with column supported fixed roofs and either a bolted deck or a welded deck.[6] This figure is to be used only when tank specific data on the number and kind of deck fittings are unavailable.

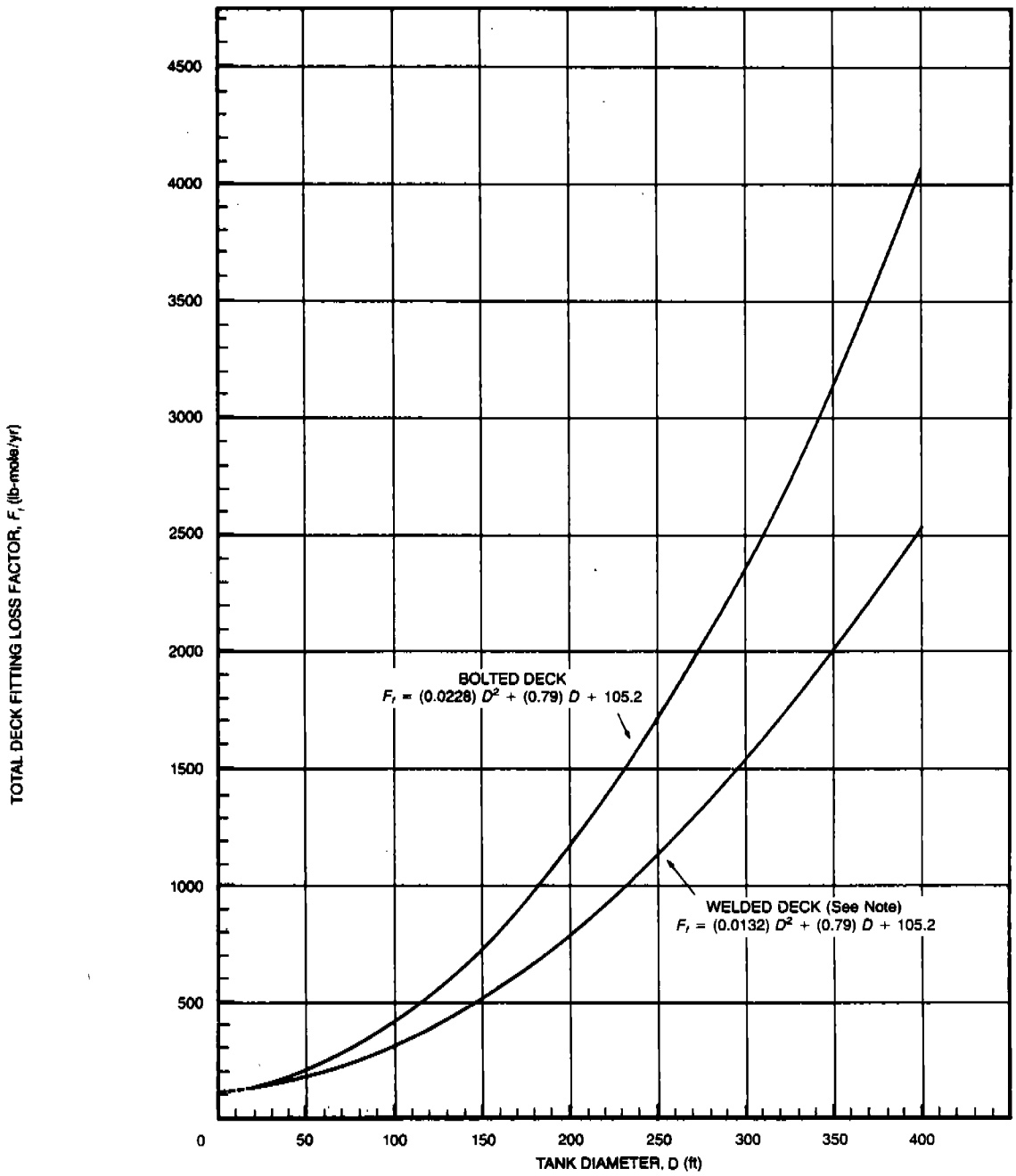

BASIS: Fittings include: (1) access hatch, with ungasketed, unbolted cover; (2) adjustable deck legs; (3) gauge float well, with ungasketed, unbolted cover; (4) sample well, with slit fabric seal (10 percent open area); (5) 1-inch diameter stub drains (only on bolted deck); and (6) vacuum breaker, with gasketed weighted mechanical actuation. This basis was derived from a survey of users and manufacturers. Other fittings may be typically used within particular companies or organizations to reflect standards and/or specifications of that group. This figure should not supersede information based on actual tank data.

NOTES: If no specific information is available, assume welded decks are the most common/typical type currently in use in tanks with self-supporting fixed roofs.

Figure 4.3-11. Approximated total deck fitting loss factors (F_f) for typical deck fittings in tanks with self-supporting fixed roofs and either a bolted deck or a welded deck.[6] This figure is to be used only when tank specific data on the number and kind of deck fittings are unavailable.

where:

L_{seam} = total length of deck seams (ft)

A_{deck} = area of deck (ft^2) = $\pi D^2/4$

D, P*, M_V, K_C = as defined for Equation 4

If the total length of the deck seam is not known, Table 4.3-8 can be used to determine S_D. Where tank specific data concerning width of deck sheets or size of deck panels are unavailable, a default value for S_D can be assigned. A value of 0.20 (ft/ft^2) can be assumed to represent the most common bolted decks currently in use.

TABLE 4.3-8. DECK SEAM LENGTH FACTORS (S_D) FOR TYPICAL DECK CONSTRUCTIONS FOR INTERNAL FLOATING ROOF TANKS[a]

Deck construction	Typical deck seam length factor, S_D (ft/ft^2)
Continuous sheet construction[b]	
5 ft wide	0.20[c]
6 ft wide	0.17
7 ft wide	0.14
Panel construction[d]	
5 x 7.5 ft rectangular	0.33
5 x 12 ft rectangular	0.28

[a]Reference 6. Deck seam loss applies to bolted decks only.

[b] $S_D = \frac{1}{W}$, where W = sheet width (ft)

[c]If no specific information is available, these factors can be assumed to represent the most common bolted decks currently in use.

[d] $S_D = \frac{(L+W)}{LW}$, where W = panel width (ft) and L = panel length (ft)

Pressure Tanks - Losses occur during withdrawal and filling operations in low pressure (2.5 to 15 psig) tanks when atmospheric venting occurs. High pressure tanks are considered closed systems, with virtually no emissions. Vapor recovery systems are often found on low pressure tanks. Fugitive losses are also associated with pressure tanks and their equipment, but

with proper system maintenance, these losses are considered insignificant. No appropriate correlations are available to estimate vapor losses from pressure tanks.

Variable Vapor Space Tanks - Variable vapor space filling losses result when vapor is displaced by liquid during filling operations. Since the variable vapor space tank has an expandable vapor storage capacity, this loss is not as large as the filling loss associated with fixed roof tanks. Loss of vapor occurs only when the tank's vapor storage capacity is exceeded.

Variable vapor space system filling losses can be estimated from:[3-7]

$$L_V = (2.40 \times 10^{-2}) \frac{M_V P}{V_1} ((V_1) - (0.25\ V_2 N_2)) \qquad (8)$$

where:

L_V = variable vapor space filling loss (lb/10^3 gal throughput)

M_V = molecular weight of vapor in storage tank (lb/lb-mole), see Note 1 to Equation 1

P = true vapor pressure at bulk liquid conditions (psia), see Note 2 to Equation 1

V_1 = volume of liquid pumped into system, throughput (bbl)

V_2 = volume expansion capacity of system (bbl), see Note 1

N_2 = number of transfers into system (dimensionless), see Note 2

Notes: (1) V_2 is the volume expansion capacity of the variable vapor space achieved by roof lifting or diaphragm flexing.

(2) N_2 is the number of transfers into the system during the time period that corresponds to a throughput of V_1.

The accuracy of Equation 8 is not documented. Special tank operating conditions may result in actual losses significantly different from the estimates provided by Equation 8. It should also be noted that, although not developed for use with heavier petroleum liquids such as kerosenes and fuel oils, the equation is recommended for use with heavier petroleum liquids in the absence of better data.

4.3.3 Sample Calculations

Three sample calculations to estimate emission losses are provided, fixed roof tank, external floating roof tank, and internal floating roof

tank. Note that the same tank size, tank painting, stored product, and ambient conditions are employed in each sample calculation. Only the type of roof varies.

Problem I - Estimate the total loss from a fixed roof tank for 3 months based on data observed during the months of March, April and May and given the following information:

Tank description:	Fixed roof tank; 100 ft diameter; 40 ft height; tank shell and roof painted specular aluminum color.
Stored product:	Motor gasoline (petroleum liquid); Reid vapor pressure (RVP), 10 psia; 6.1 lb/gal liquid density; no vapor or liquid composition given; 375,000 bbl throughput for the 3 months.
Ambient conditions:	60°F average ambient temperature for the 3 months; 10 mi/hr average wind speed at the tank site for the 3 months; assume 14.7 psia atmospheric pressure; average maximum daily temperature, 68°F; average minimum daily temperature, 47°F.
Calculation:	Total loss = breathing loss + working loss.

(a) Breathing Loss - Calculate using Equation 1.

$$L_B = 2.26 \times 10^{-2}\ M_V \left(\frac{P}{P_A - P}\right)^{0.68} D^{1.73} H^{0.51} \Delta T^{0.50} F_P C K_C \qquad (1)$$

where:

L_B = breathing loss (lb/yr)

M_V = 66 lb/lb-mole (from Table 4.3-2 and RVP 10 gasoline)

T_A = 60°F (given)

T_S = 62.5°F (from Table 4.3-3, for an aluminum color tank in good condition and T_A = 60°F)

RVP = 10 psia (given)

P_A = 14.7 psia (assumed)

P = 5.4 psia (from Figure 4.3-6, for 10 psia Reid vapor pressure gasoline and T_S = 62.5°F)

D = 100 ft (given)

H = 20 ft (assumed H = ½ tank height)

ΔT = 21°F (average daily maximum, 68°F, minus average daily minimum, 47°F)

F_P = 1.20 (from Table 4.3-1 and given specular aluminum tank color)

C = 1.0 (tank diameter is larger than 30 ft)

K_C = 1.0 (value appropriate for all organic liquids except crude oil)

L_B (lb/yr) =

$$(2.26 \times 10^{-2})(66)\left(\frac{5.4}{14.7-5.4}\right)^{0.68}(100)^{1.73}(20)^{0.51}(21)^{0.50}(1.20)(1.0)(1.0) =$$

75,323 lb/yr

For the 3 months, $L_B = \frac{75,323}{4} = 18,831$ lb

(b) Working Loss - Calculate using Equation 2.

$$L_W = 2.40 \times 10^{-5}\ M_V PVNK_N K_C \qquad (2)$$

where:

L_W = working loss (lb/yr)

M_V = 66 lb/lb-mole (from Table 4.3-1 and RVP 10 gasoline)

P = 5.4 psia (calculated for breathing loss above)

V = 2,350,000 gal

where: V (cubic feet) = $\frac{\pi D^2 h}{4}$

π = 3.141

D = 100 ft

h = 40 ft

$$V = \frac{3.141(100)^2(40)}{4}$$

$$= 314,100 \text{ cubic ft}$$

V (gal) = (7.48 gal/ft^3) V (ft^3)

V (gal) = 7.48 (314,100) = 2,349,468 gal, round to 2,350,000 gal

$$N = \frac{\text{throughput/year}}{\text{tank volume}}$$

$$= \frac{(375,000 \text{ bbl})(4)(42 \text{ gal/bbl})}{2,350,000 \text{ gal}} = 26.8$$

K_N = 1.0 (from Figure 4.3-7 and N = 26.8)

K_C = 1.0 (value appropriate for all organic liquids except crude oil)

L_W (lb/yr) =

2.40×10^{-5} (66)(5.4)(2.35×10^6)(26.8)(1.0)(1.0) = 538,705 lb/yr

For the 3 months, $L_W = \frac{538,705}{4}$ = 134,676 lb

(c) Total Loss for the 3 months -

$L_T = L_B + L_W$

= 18,831 + 134,676

= 153,507 lb

Problem II - Estimate the total loss from an external floating roof tank for 3 months, based on data observed during the months of March, April and May and given the following information:

Tank description:	External floating roof tank with a mechanical (metallic) shoe primary seal in good condition; 100 ft diameter; welded tank; shell and roof painted aluminum color.
Stored product:	Motor gasoline (petroleum liquid); Reid vapor pressure, 10 psia; 6.1 lb/gal liquid density; no vapor or liquid composition given; 375,000 bbl throughput for the 3 months.
Ambient conditions:	60°F average ambient temperature for the 3 months; 10 mi/hr average wind speed at tank site for the 3 months; assume 14.7 psia atmospheric pressure.
Calculation:	Total loss = rim seal loss + withdrawal loss + deck fitting loss + deck seam loss.

(a) Rim Seal Loss - Calculate the yearly rim seal loss from Equation 4.

$$L_R = K_S V^n P^* D M_V K_C \qquad (4)$$

where:

L_R = rim seal loss (lb/yr)

K_S = 1.2 (from Table 4.3-4, for a welded tank with a mechanical shoe primary seal; note that external floating roofs have welded decks only)

n = 1.5 (from Table 4.3-4, for a welded tank with a mechanical shoe primary seal)

V = 10 mi/hr (given)

T_A = 60°F (given)

T_S = 62.5°F (from Table 4.3-3, for an aluminum color tank in good condition and T_A = 60°F)

RVP = 10 psia (given)

P = 5.4 psia (from Figure 4.3-6, for 10 psia Reid vapor pressure gasoline and T_S = 62.5°F)

P_A = 14.7 psia (assumed)

$$P^* = \frac{\left(\frac{5.4}{14.7}\right)}{\left(1 + \left(1 - \frac{5.4}{14.7}\right)^{0.5}\right)^2} = 0.114$$

(can also be determined from Figure 4.3-9 for P = 5.4 psia)

D = 100 ft (given)

M_V = 66 lb/lb-mole (from Table 4.3-2 and RVP 10 gasoline)

K_C = 1.0 (value appropriate for all organic liquids except crude oil)

To calculate yearly rim seal loss based on the 3 month data, multiply the K_S, K_C, P^*, D, M_V, and V^n values, as in Equation 4.

$$L_R = (1.2)(10)^{1.5}(0.114)(100)(66)(1.0)$$

$$= 28{,}551 \text{ lb/yr}$$

For the 3 months, $L_R = \frac{(28{,}551)}{4} = 7{,}138$ lb

(b) <u>Withdrawal Loss</u> - Calculate the withdrawal loss from Equation 5.

$$L_W = (0.943)\frac{QCW_L}{D}\left[1 + \left(\frac{N_C F_C}{D}\right)\right] \quad (5)$$

where:

L_W = withdrawal loss (lb/yr)

$Q = 3.75 \times 10^5$ bbl for 3 months = 1.5×10^6 bbl/yr (given)

$C = 0.0015$ bbl/1,000 ft^2 (from Table 4.3-5, for gasoline in a steel tank with light rust assumed for tank in good condition as given)

$W_L = 6.1$ lb/gal (given)

$D = 100$ ft (given)

$N_C = 0$ (value for external floating roof tanks)

$F_C = 1.0$ (default value when column diameter is unknown; however, there are no columns in this tank, and an F_c value is used only for calculation purposes)

To calculate yearly withdrawal loss, use Equation 5.

$$L_W \text{ (lb/yr)} = \frac{(0.943)(1.5 \times 10^6)(0.0015)(6.1)}{100} \quad 1 + \frac{(0.0)(1.0)}{100}$$

$$= 129 \text{ lb/yr}$$

To calculate withdrawal loss for 3 months, divide by 4.

For the 3 months, $L_W = 129/4 = 32$ lb

(c) Deck Fitting Loss - As stated, deck fitting loss estimation procedures for external floating roof tanks are not available. The deck fitting loss for the 3-month period is unknown and will be assumed to 0.

(d) Deck Seam Loss - External floating roof tanks have welded decks; therefore, there are no deck seam losses.

(e) Total Loss for the 3 months - Calculate the total loss using Equation 3.

$$L_T = L_R + L_W + L_F + L_D \qquad (3)$$

where:

L_T = total loss (lb/3 mo)

L_R = 7,138 lb/3 mo

L_W = 32 lb/3 mo

L_F = 0 (assumed)

L_D = 0

$$L_T = 7{,}138 + 32 + 0 + 0$$

$$= 7{,}170 \text{ lb/3 mo}$$

Problem III - Estimate the total loss for 3 months from an internal floating roof tank based on data observed during the months of March, April and May and given the following information:

Tank description:	Freely vented internal floating roof tank; contact deck made of welded 5 ft wide continuous sheets, with vapor mounted resilient seal; the fixed roof is supported by 6 pipe columns; tank shell and roof painted aluminum; 100 ft diameter.
Stored product:	Motor gasoline (petroleum liquid); Reid vapor pressure of 10 psia; 6.1 lb/gal liquid density; no vapor or liquid composition given; 375,000 bbl throughput for the 3 months.
Ambient conditions:	60°F average ambient temperature for the 3 months; 10 mi/hr average wind speed at the tank site for the 3 months; assume 14.7 psia atmospheric pressure.
Calculation:	Total loss = rim seal loss + withdrawal loss + deck fitting loss + deck seam loss.

(a) Rim Seal Loss - Calculate yearly rim seal loss using Equation 4.

$$L_R = K_S V^n P^* D M_V K_C \qquad (4)$$

where:

L_R = rim seal loss (lb/yr)

K_S = 6.7 (from Table 4.3-4; for a welded tank with a vapor mounted resilient seal and no secondary seal)

V = 10 mi/hr (given)

n = 0 (from Table 4.3-4 for a welded tank with a vapor mounted resilient seal and no secondary seal)

P^* = 0.114 (calculated in Problem II)

D = 100 ft (given)

M_V = 66 lb/lb-mole (from Table 4.3-2 and RVP 10 gasoline)

K_C = 1.0 (value appropriate for all organic liquids except crude oil)

$$L_R = 6.7(10)^0(0.114)(100)(66)(1.0)$$

$$= 5{,}041 \text{ lb/yr}$$

For the 3 months, $L_R = \frac{5{,}041}{4} = 1{,}260$ lb

(b) Withdrawal Loss - Calculate using Equation 5.

$$L_W = (0.943)\ \frac{QCW_L}{D}\ \left[1 + \left(\frac{N_C F_C}{D}\right)\right] \qquad (5)$$

where:

L_W = withdrawal loss (lb/yr)

$Q = 1.5 \times 10^6$ bbl/yr (calculated in Problem II)

$C = 0.0015$ bbl/1,000 ft^2 (from Table 4.3-5, light rust)

$W_L = 6.1$ lb/gal (given)

$D = 100$ ft (given)

$N_C = 6$ (given)

$F_C = 1.0$ (default value since column construction details are unknown)

$$L_W = \frac{(0.943)(1.5\text{x}10^6)(0.0015)(6.1)}{100}\ \left[1 + \left(\frac{(6)(1.0)}{100}\right)\right]$$

$$= 137 \text{ lb/yr}$$

For the 3 months, $L_W = \frac{137}{4} = 34$ lb

(c) Deck Fitting Loss - Calculate using Equation 6.

$$L_F = F_F P^* M_V K_C \qquad (6)$$

where:

L_F = deck fitting loss (lb/yr)

F_F = 700 lb-mole/yr (interpreted from Figure 4.3-10, given tank diameter of 100 ft)

$P^* = 0.114$ (calculated in Problem II)

$M_V = 66$ lb/lb-mole (from Table 4.3-2 and RVP 10 gasoline)

$K_C = 1.0$ (value appropriate for all liquid organics except crude oil)

$$L_F = 700(0.114)(66)(1.0)$$

$$= 5{,}267 \text{ lb/yr}$$

For the 3 months, $L_F = \frac{5{,}267}{4} = 1{,}317$ lb

(d) Deck Seam Loss - Calculate using Equation 7.

$$L_D = K_D S_D D^2 P^* M_V K_C \quad (7)$$

where:

L_D = deck seam loss (lb/yr)

K_D = 0 for welded seam deck, therefore

L_D = 0

(e) Total Loss for 3 months - Calculate from Equation 3.

$$L_T = L_R + L_W + L_F + L_D \quad (3)$$

where:

L_T = total loss (lb/yr)

L_R = 1,260 lb/3 mo

L_W = 34 lb/3 mo

L_F = 1,317 lb/3 mo

L_D = 0

$$L_T = 1{,}260 + 34 + 1{,}317 + 0$$

For the 3 months, L_T = 2,611 lb

References for Section 4.3 –

1. VOC Emissions From Volatile Organic Liquid Storage Tanks - Background Information for Proposed Standards, EPA-450/3-81-003a, U. S. Environmental Protection Agency, Research Triangle Park, NC, July 1984.

2. Background Documentation for Storage of Organic Liquids, EPA Contract No. 68-02-3174, TRW Environmental, Inc., Research Triangle Park, NC, May 1981.

3. Petrochemical Evaporation Loss From Storage Tanks, Bulletin No. 2523, American Petroleum Institute, New York, NY, 1969.

4. Henry C. Barnett, et al., Properties of Aircraft Fuels, NACA-TN 3276, Lewis Flight Propulsion Laboratory, Cleveland, OH, August 1956.

5. Evaporation Loss From External Floating Roof Tanks, Second Edition, Bulletin No. 2517, American Petroleum Institute, Washington, D. C., 1980.

6. Evaporation Loss From Internal Floating Roof Tanks, Third Edition, Bulletin No. 2519, American Petroleum Institute, Washington, D. C., 1983.

7. Use of Variable Vapor Space Systems To Reduce Evaporation Loss, Bulletin No. 2520, American Petroleum Institute, New York, NY, 1964.

4.4 TRANSPORTATION AND MARKETING OF PETROLEUM LIQUIDS[1-3]

4.4.1 General

The transportation and marketing of petroleum liquids involve many distinct operations, each of which represents a potential source of evaporation loss. Crude oil is transported from production operations to a refinery by tankers, barges, rail tank cars, tank trucks and pipelines. Refined petroleum products are conveyed to fuel marketing terminals and petrochemical industries by these same modes. From the fuel marketing terminals, the fuels are delivered by tank trucks to service stations, commercial accounts and local bulk storage plants. The final destination for gasoline is usually a motor vehicle gasoline tank. Similar distribution paths exist for fuel oils and other petroleum products. A general depiction of these activities is shown in Figure 4.4-1.

4.4.2 Emissions and Controls

Evaporative emissions from the transportation and marketing of petroleum liquids may be separated, by storage equipment and mode of transportation used, into four categories:

1. Rail tank cars, tank trucks and marine vessels: Loading, transit and ballasting losses.

2. Service stations: Bulk fuel drop losses and underground tank breathing losses.

3. Motor vehicle tanks: Refueling losses.

4. Large storage tanks: Breathing, working and standing storage losses. These are discussed in Section 4.3.

Evaporative and exhaust emissions are also associated with motor vehicle operation, and these topics are discussed in AP-42, Volume II: Mobile Sources.

Rail Tank Cars, Tank Trucks and Marine Vessels - Emissions from these sources are due to loading losses, ballasting losses and transit losses.

Loading Losses - Loading losses are the primary source of evaporative emissions from rail tank car, tank truck and marine vessel operations. Loading losses occur as organic vapors in "empty" cargo tanks are displaced to the atmosphere by the liquid being loaded into the tanks. These vapors are a composite of (1) vapors formed in the empty tank by evaporation of residual product from previous loads, (2) vapors transferred to the tank in vapor balance systems as product is being unloaded, and (3) vapors generated in the tank as the new product is being loaded. The quantity of evaporative losses from loading operations is, therefore, a function of the following parameters.

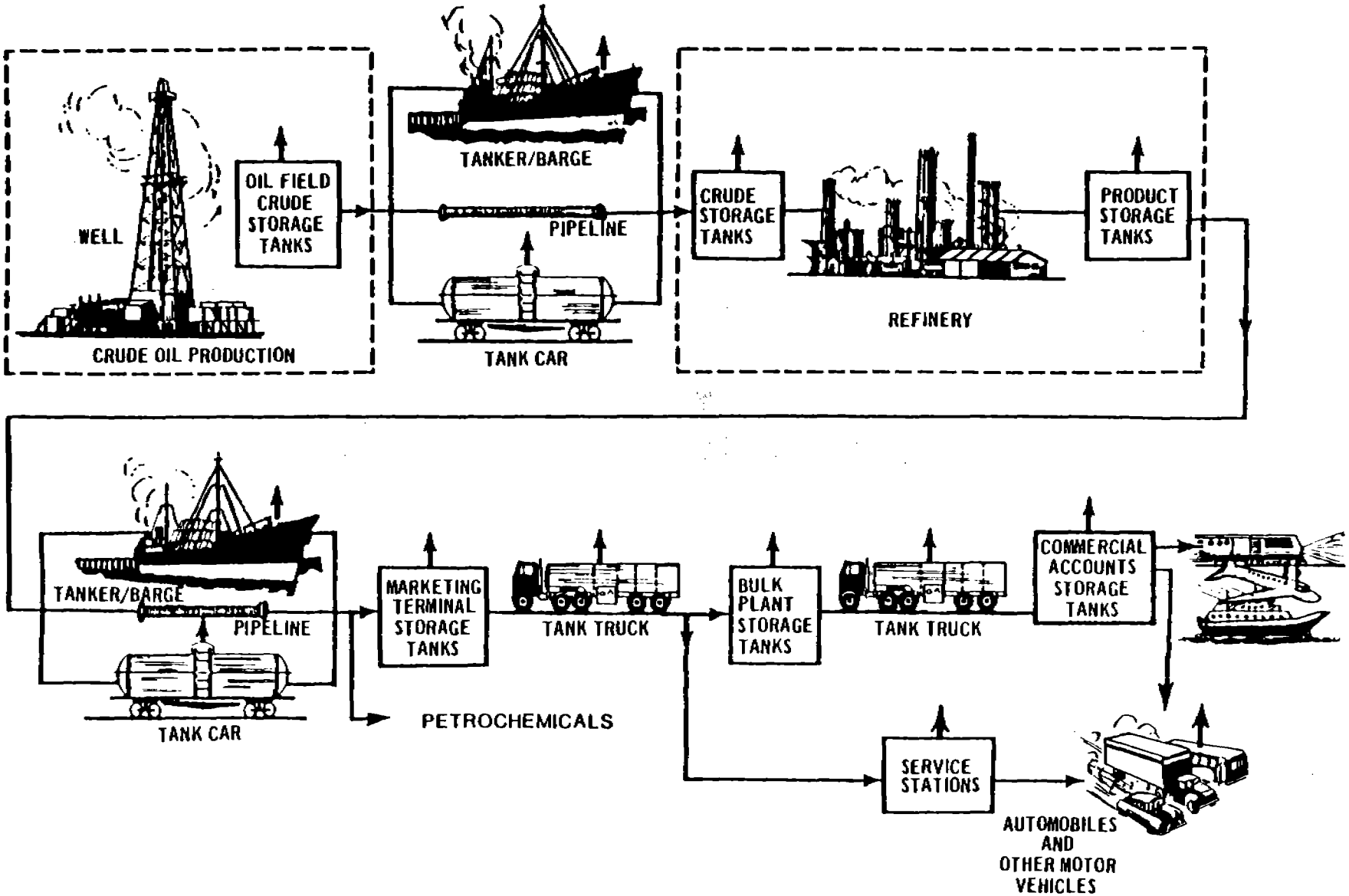

Figure 4.4-1. Flowsheet of petroleum production, refining, and distribution systems. (Sources of organic evaporative emissions are indicated by vertical arrows.)

- Physical and chemical characteristics of the previous cargo.
- Method of unloading the previous cargo.
- Operations to transport the empty carrier to a loading terminal.
- Method of loading the new cargo.
- Physical and chemical characteristics of the new cargo.

The principal methods of cargo carrier loading are illustrated in Figures 4.4-2 through 4.4-4. In the splash loading method, the fill pipe dispensing the cargo is lowered only partway into the cargo tank. Significant turbulence and vapor/liquid contact occur during the splash loading operation, resulting in high levels of vapor generation and loss. If the turbulence is great enough, liquid droplets will be entrained in the vented vapors.

A second method of loading is submerged loading. Two types are the submerged fill pipe method and the bottom loading method. In the submerged fill pipe method, the fill pipe extends almost to the bottom of the cargo tank. In the bottom loading method, a permanent fill pipe is attached to the cargo tank bottom. During most of both methods of submerged loading, the fill pipe opening is below the liquid surface level. Liquid turbulence is controlled significantly during submerged loading, resulting in much lower vapor generation than encountered during splash loading.

The recent loading history of a cargo carrier is just as important a factor in loading losses as the method of loading. If the carrier has carried a nonvolatile liquid such as fuel oil, or has just been cleaned, it will contain vapor free air. If it has just carried gasoline and has not been vented, the air in the carrier tank will contain volatile organic vapors, which are expelled during the loading operation along with newly generated vapors.

Cargo carriers are sometimes designated to transport only one product, and in such cases are practicing "dedicated service". Dedicated gasoline cargo tanks return to a loading terminal containing air fully or partially saturated with vapor from the previous load. Cargo tanks may also be "switch loaded" with various products, so that a nonvolatile product being loaded may expel the vapors remaining from a previous load of a volatile product such as gasoline. These circumstances vary with the type of cargo tank and with the ownership of the carrier, the petroleum liquids being transported, geographic location, and season of the year.

One control measure for gasoline tank trucks is called "vapor balance service", in which the cargo tank retrieves the vapors displaced during product unloading at bulk plants or service stations and transports the vapors back to the loading terminal. Figure 4.4-5 shows a tank truck in vapor balance service filling a service station underground tank and taking on displaced gasoline vapors for return to the terminal. A cargo tank in vapor balance service normally is saturated with organic vapors, and the presence of these vapors at the start of submerged loading results in greater loading losses than encountered during nonvapor balance, or "normal", service. Vapor balance service is usually not practiced with

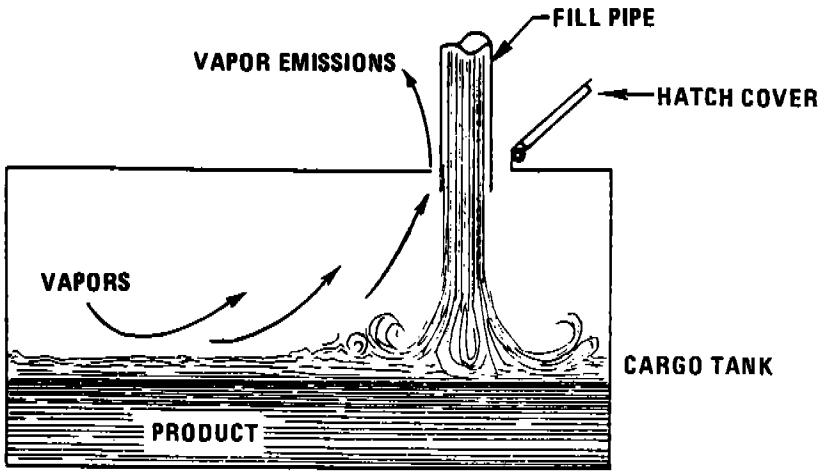

Figure 4.4-2. Splash loading method.

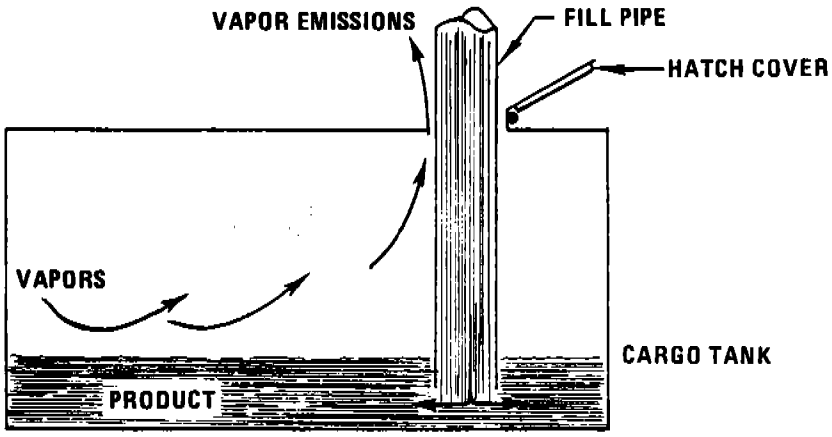

Figure 4.4-3. Submerged fill pipe.

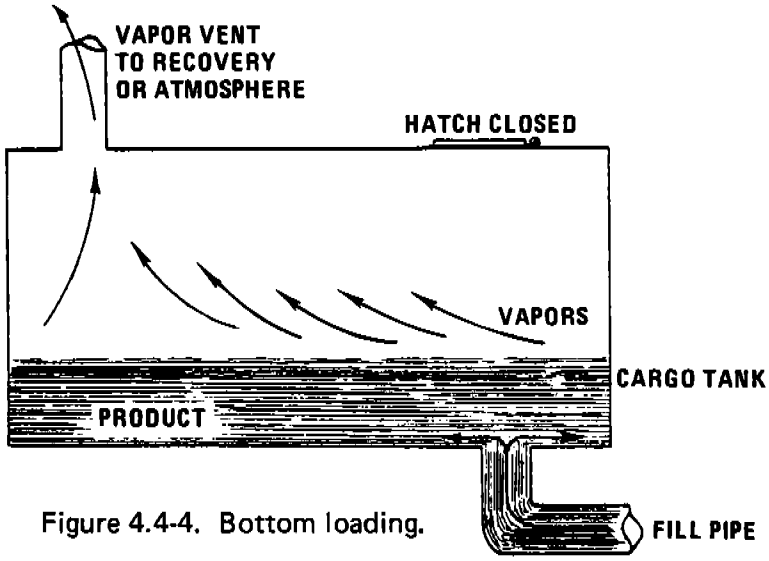

Figure 4.4-4. Bottom loading.

marine vessels, although some vessels practice emission control by means of vapor transfer within their own cargo tanks during ballasting operations (see page 4.4-10).

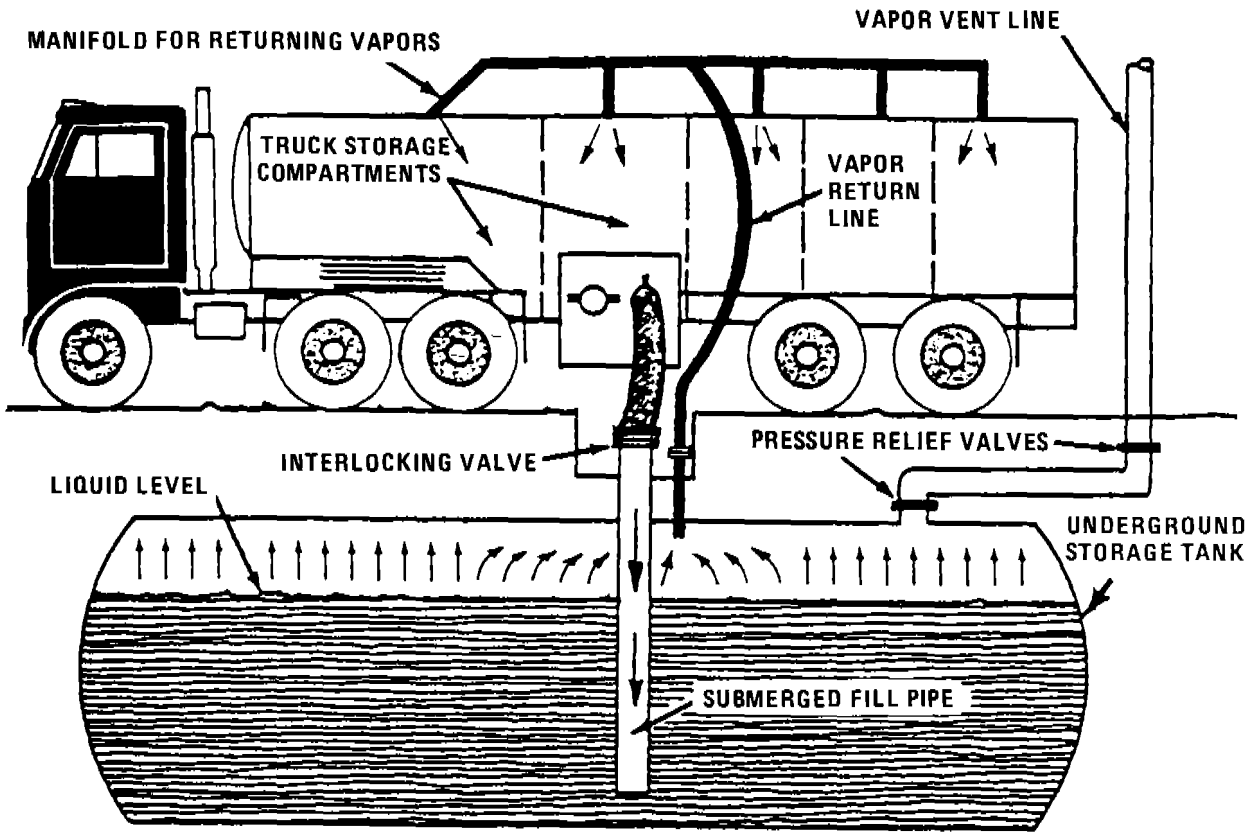

Figure 4.4-5. Tank truck unloading into a service station underground storage tank and practicing "vapor balance" form of emission control.

Emissions from loading petroleum liquid can be estimated (with a probable error of ±30 percent)[4] using the following expression:

$$L_L = 12.46 \frac{SPM}{T} \qquad (1)$$

where:
- L_L = Loading loss, lb/10^3 gal of liquid loaded
- M = Molecular weight of vapors, lb/lb-mole (see Table 4.3-2)
- P = True vapor pressure of liquid loaded, psia (see Figures 4.3-5 and 4.3-6 and Table 4.3-2)
- T = Temperature of bulk liquid loaded, °R (°F + 460)
- S = A saturation factor (see Table 4.4-1)

The saturation factor, S, represents the expelled vapor's fractional approach to saturation, and it accounts for the variations observed in emission rates from the different unloading and loading methods. Table 4.4-1 lists suggested saturation factors.

TABLE 4.4-1. SATURATION (S) FACTORS FOR CALCULATING PETROLEUM LIQUID LOADING LOSSES

Cargo carrier	Mode of operation	S factor
Tank trucks and rail tank cars	Submerged loading of a clean cargo tank	0.50
	Submerged loading: dedicated normal service	0.60
	Submerged loading: dedicated vapor balance service	1.00
	Splash loading of a clean cargo tank	1.45
	Splash loading: dedicated normal service	1.45
	Splash loading: dedicated vapor balance service	1.00
Marine vessels[a]	Submerged loading: ships	0.2
	Submerged loading: barges	0.5

[a]For products other than gasoline and crude oil. Use factors from Table 4.4-2 for marine loading of gasoline. Use Equations 2 and 3 and Table 4.4-3 for marine loading of crude oil.

Emissions from controlled loading operations can be calculated by multiplying the uncontrolled emission rate calculated in Equation 1 by the control efficiency term:

$$\left(1 - \frac{\text{eff}}{100}\right).$$

Measures to reduce loading emissions include selection of alternate loading methods and application of vapor recovery equipment. The latter captures organic vapors displaced during loading operations and recovers

the vapors by the use of refrigeration, absorption, adsorption and/or compression. The recovered product is piped back to storage. Vapors can also be controlled through combustion in a thermal oxidation unit, with no product recovery. Figure 4.4-6 demonstrates the recovery of gasoline vapors from tank trucks during loading operations at bulk terminals. Control efficiencies of modern units range from 90 to over 99 percent, depending on the nature of the vapors and the type of control equipment used.[5-6]

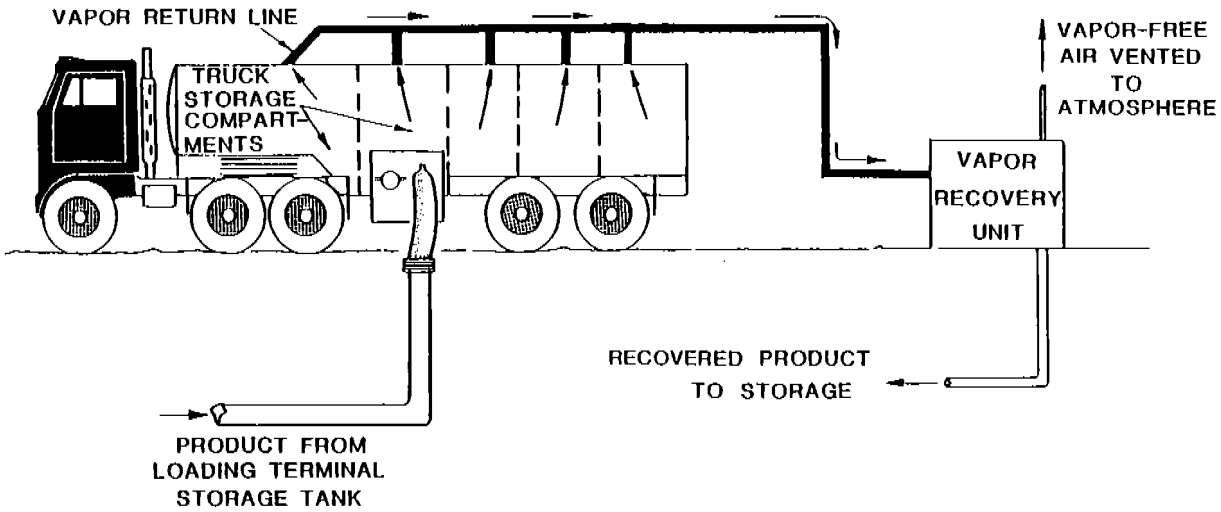

Figure 4.4-6. Tank truck loading with vapor recovery.

Sample Calculation - Loading losses (L_L) from a gasoline tank truck in dedicated vapor balance service and practicing vapor recovery would be calculated as follows, using Equation 1:

Design basis -

Cargo tank volume is 8,000 gallons
Gasoline RVP is 9 psia
Product temperature is 80°F
Vapor recovery efficiency is 95%

Loading loss equation -

$$L_L = 12.46 \frac{SPM}{T} \left(1 - \frac{eff}{100}\right)$$

where: S = Saturation factor (see Table 4.4-1) = 1.00
P = True vapor pressure of gasoline (see Figure 4.3-6) = 6.6 psia
M = Molecular weight of gasoline vapors (see Table 4.3-2) = 66
T = Temperature of gasoline = 540°R
eff = Control efficiency = 95%

$$L_L = 12.46 \frac{(1.00)(6.6)(66)}{540} \left(1 - \frac{95}{100}\right)$$

$$= 0.50 \text{ lb}/10^3 \text{ gal}$$

Total loading losses are:

$$(0.50 \text{ lb}/10^3 \text{ gal})(8.0 \times 10^3 \text{ gal}) = 4.0 \text{ lb}$$

Measurements of gasoline loading losses from ships and barges have led to the development of emission factors for these specific loading operations.[7] These factors are presented in Table 4.4-2 and, for gasoline loading operations at marine terminals, should be used instead of Equation 1.

In addition to Equation 1, which estimates emissions from the loading of petroleum liquids, Equation 2 has been developed specifically for estimating the emissions from the loading of crude oil into ships and ocean barges:

$$C_L = C_A + C_G \tag{2}$$

where: C_L = Total loading loss, lb/10^3 gal of crude oil loaded

C_A = Arrival emission factor, contributed by vapors in the empty tank compartment prior to loading, lb/10^3 gal loaded (see Note)

C_G = Generated emission factor, contributed by evaporation during loading, lb/10^3 gal loaded

This equation was developed empirically based on test measurements of several vessel compartments.[7] The quantity C_G can be calculated using Equation 3:

$$C_G = 1.84\ (0.44\ P - 0.42)\ \frac{M\ G}{T} \tag{3}$$

where: P = True vapor pressure of loaded crude oil, psia (see Figure 4.3-5 and Table 4.3-2)
M = Molecular weight of vapors, lb/lb-mole (see Table 4.3-2)
G = Vapor growth factor = 1.02 (dimensionless)
T = Temperature of vapors, °R (°F + 460)

Note - Values of C_A for various cargo tank conditions are listed in Table 4.4-3.

Emission factors derived from Equation 3 and Table 4.4-3 represent total organic compounds. Nonmethane-nonethane volatile organic compound (VOC) emission factors for crude oil vapors have been found to range from approximately 55 to 100 weight percent of these total organic factors. When specific vapor composition information is not available, the VOC emission factor can be estimated by taking 85 percent of the total organic factor.[3]

TABLE 4.4-2. VOLATILE ORGANIC COMPOUND EMISSION FACTORS FOR GASOLINE LOADING OPERATIONS AT MARINE TERMINALS[a]

Vessel tank condition	Previous cargo	Total organic emission factors: Ships/ocean barges[b] mg/liter transferred	Ships/ocean barges[b] lb/10^3 gal transferred	Barges[b] mg/liter transferred	Barges[b] lb/10^3 gal transferred
Uncleaned	Volatile[c]	315	2.6	465	3.9
Ballasted	Volatile	205	1.7	d	d
Cleaned	Volatile	180	1.5	e	e
Gas-freed	Volatile	85	0.7	e	e
Any condition	Nonvolatile	85	0.7	e	e
Gas-freed	Any cargo	e	e	245	2.0
Typical overall situation[f]	Any cargo	215	1.8	410	3.4

[a]References 2, 8. Factors represent nonmethane-nonethane VOC emissions because methane and ethane have been found to constitute a negligible weight fraction of the evaporative emissions from gasoline.
[b]Ocean barges (tank compartment depth about 40 feet) exhibit emission levels similar to tank ships. Shallow draft barges (compartment depth 10 to 12 feet) exhibit higher emission levels.
[c]Volatile cargoes are those with a true vapor pressure greater than 1.5 psia.
[d]Barges are not usually ballasted.
[e]Unavailable.
[f]Based on observation that 41% of tested ship compartments were uncleaned, 11% ballasted, 24% cleaned, and 24% gas-freed. For barges, 76% were uncleaned.

TABLE 4.4-3. AVERAGE ARRIVAL EMISSION FACTORS, C_A, FOR CRUDE OIL LOADING EMISSION EQUATION[a]

Ship/ocean barge tank condition	Previous cargo	Arrival emission factor, lb/10^3 gal
Uncleaned	Volatile[b]	0.86
Ballasted	Volatile	0.46
Cleaned or gas-freed	Volatile	0.33
Any condition	Nonvolatile	0.33

[a]Arrival emission factors (C_A) to be added to generated emission factors calculated in Equation 3 to produce total crude oil loading loss. These factors represent total organic compounds; nonmethane-nonethane VOC emission factors average about 15% lower.
[b]Volatile cargoes are those with a true vapor pressure greater than 1.5 psia.

Ballasting Losses - Ballasting operations are a major source of evaporative emissions associated with the unloading of petroleum liquids at marine terminals. It is common practice to load several cargo tank compartments with sea water after the cargo has been unloaded. This water, termed "ballast", improves the stability of the empty tanker during the subsequent voyage. Although ballasting practices vary, individual cargo tanks are ballasted typically about 80 percent, and the total vessel is ballasted 15 to 40 percent, of capacity. Ballasting emissions occur as vapor laden air in the "empty" cargo tank is displaced to the atmosphere by ballast water being pumped into the tank. Upon arrival at a loading port, the ballast water is pumped from the cargo tanks before the new cargo is loaded. The ballasting of cargo tanks reduces the quantity of vapors returning in the empty tank, thereby reducing the quantity of vapors emitted during subsequent tanker loading. Regulations administered by the U. S. Coast Guard require that, at marine terminals located in ozone nonattainment areas, large tankers with crude oil washing systems contain organic vapors from ballasting.[9] This is accomplished principally by displacing the vapors during ballasting into a cargo tank being simultaneously unloaded. Marine vessels in other areas emit organic vapors directly to the atmosphere.

Equation 4 has been developed from test data to calculate the ballasting emissions from crude oil ships and ocean barges[7]:

$$L_B = 0.31 + 0.20\ P + 0.01\ PU_A \qquad (4)$$

where: L_B = Ballasting emission factor, lb/10^3 gal of ballast water

P = True vapor pressure of discharged crude oil, psia (see Figure 4.3-5 and Table 4.3-2)

U_A = Arrival cargo true ullage, prior to dockside discharge, measured from the deck, feet. The term "ullage" refers to the distance between the cargo surface level and the deck level

Table 4.4-4 lists average total organic emission factors for ballasting into uncleaned crude oil cargo compartments. The first category applies to "full" compartments wherein the crude oil true ullage just prior to cargo discharge is less than 5 feet. The second category applies to lightered, or short-loaded, compartments (part of cargo previously discharged or original load a partial fill), with an arrival true ullage greater than 5 feet. It should be remembered that these tabulated emission factors are examples only, based on average conditions, to be used when crude oil vapor pressure is unknown. Equation 4 should be used when information about crude oil vapor pressure and cargo compartment condition is available. The sample calculation illustrates the use of Equation 4.

Sample Calculation - Ballasting emissions from a crude oil cargo ship would be calculated as follows, using Equation 4:

Design basis -

Vessel and cargo description:
80,000 dead-weight-ton tanker, crude oil capacity 500,000 barrels; 20 percent of the cargo capacity is filled with ballast water after

TABLE 4.4-4. TOTAL ORGANIC EMISSION FACTORS FOR CRUDE OIL BALLASTING[a]

Compartment condition before cargo discharge	Average emission factors: By category, mg/liter ballast water	By category, lb/10³ gal ballast water	Typical overall[b], mg/liter ballast water	Typical overall[b], lb/10³ gal ballast water
Fully loaded[c]	111	0.9	129	1.1
Lightered or previously short-loaded[d]	171	1.4		

[a]Assumes crude oil temperature of 60°F and RVP of 5 psia. Nonmethane-nonethane VOC emission factors average about 85% of these total organic factors.
[b]Based on observation that 70% of tested compartments had been fully loaded before ballasting. May not represent average vessel practices.
[c]Assumed typical arrival ullage of 2 ft.
[d]Assumed typical arrival ullage of 20 ft.

cargo discharge. The crude oil has an RVP of 6 psia and is discharged at 75°F.

Compartment conditions:
70 percent of the ballast water is loaded into compartments that had been fully loaded to 2 feet ullage, and 30 percent is loaded into compartments that had been lightered to 15 feet ullage before arrival at dockside.

Ballasting emission equation -

$$L_B = 0.31 + 0.20\ P + 0.01\ PU_A$$

where: P = True vapor pressure of crude oil (see Figure 4.3-5) = 4.6 psia

U_A = True cargo ullage for the full compartments = 2 feet, and true cargo ullage for the lightered compartments = 15 feet

$$L_B = 0.70\ [0.31 + (0.20)(4.6) + (0.01)(4.6)(2)] + 0.30\ [0.31 + (0.20)(4.6) + (0.01)(4.6)(15)]$$

$$= 1.5\ \text{lb}/10^3\ \text{gal}$$

Total ballasting emissions are:

$$(1.5\ \text{lb}/10^3\ \text{gal})(0.20)(500{,}000\ \text{bbl})(42\ \text{gal/bbl}) = 6{,}300\ \text{lb}$$

Since VOC emissions average about 85% of these total organic emissions, emissions of VOC are about: (0.85)(6,300 lb) = 5,360 lb

Transit Losses - In addition to loading and ballasting losses, losses occur while the cargo is in transit. Transit losses are similar in many ways to breathing losses associated with petroleum storage (see Section 4.3). Experimental tests on ships and barges have indicated that transit losses can be calculated using Equation 5[4]:

$$L_T = 0.1\ PW \qquad (5)$$

where: L_T = Transit loss from ships and barges, lb/week-10^3 gal transported

P = True vapor pressure of the transported liquid, psia (see Figures 4.3-5 and 4.3-6 and Table 4.3-2)

W = Density of the condensed vapors, lb/gal (see Table 4.3-2)

Emissions from gasoline truck cargo tanks during transit have been studied by a combination of theoretical and experimental techniques, and typical emission values are presented in Table 4.4-5.[10-11] Emissions depend on the extent of venting from the cargo tank during transit, which in turn depends on the vapor tightness of the tank, the pressure relief valve settings, the pressure in the tank at the start of the trip, the vapor pressure of the fuel being transported, and the degree of fuel vapor saturation of the space in the tank. The emissions are not directly proportional to the time spent in transit. If the vapor leakage rate of the tank increases, emissions increase up to a point, and then the rate changes as other determining factors take over. Truck tanks in dedicated vapor balance service usually contain saturated vapors, and this leads to lower emissions during transit, because no additional fuel evaporates to raise the pressure in the tank to cause venting. Table 4.4-5 lists "typical" values for transit emissions and "extreme" values that could occur in the unlikely event that all determining factors combined to cause maximum emissions.

In the absence of specific inputs for Equations 1 through 5, the typical evaporative emission factors presented in Tables 4.4-5 and 4.4-6 should be used. It should be noted that, although the crude oil used to calculate the emission values presented in these tables has an RVP of 5, the RVP of crude oils can range from less than 1 up to 10. Similarly, the RVP of gasolines has a range of approximately 7 to 13. In areas where loading and transportation sources are major factors affecting air quality, it is advisable to obtain the necessary parameters and calculate emission estimates using Equations 1 through 5.

Service Stations - Another major source of evaporative emissions is the filling of underground gasoline storage tanks at service stations. Gasoline is usually delivered to service stations in large (8,000 gallon) tank trucks or smaller account trucks. Emissions are generated when gasoline vapors in the underground storage tank are displaced to the atmosphere by the gasoline being loaded into the tank. As with other loading losses, the quantity of the service station tank filling loss depends on several variables, including the method and rate of filling, the tank configuration, and the gasoline temperature, vapor pressure and composition. Using Equation (1), an average emission rate for submerged filling is 880 milligrams per liter of transferred gasoline, and the rate for splash filling is 1,380 milligrams per liter of transferred gasoline (see Table 4.4-7).[5]

TABLE 4.4-5 TOTAL ORGANIC EMISSION FACTORS FOR PETROLEUM LIQUID RAIL TANK CARS AND TANK TRUCKS

Emission source	Gasoline[a]	Crude oil[b]	Jet naphtha (JP-4)	Jet kerosene	Distillate oil No. 2	Residual oil No. 6
Loading operations[c]						
Submerged loading - dedicated normal service[d]						
mg/liter transferred	590	240	180	1.9	1.7	0.01
lb/10^3 gal transferred	5	2	1.5	0.16	0.014	0.0001
Submerged loading - vapor balance service[d]						
mg/liter transferred	980	400	300	e	e	e
lb/10^3 gal transferred	8	3	2.5	e	e	e
Splash loading - dedicated normal service						
mg/liter transferred	1,430	580	430	5	4	0.03
lb/10^3 gal transferred	12	5	4	0.04	0.03	0.0003
Splash loading - vapor balance service						
mg/liter transferred	980	400	300	e	e	e
lb/10^3 gal transferred	8	3	2.5	e	e	e
Transit losses						
Loaded with product						
mg/liter transported						
typical	0 - 1.0	f	f	f	f	f
extreme	0 - 9.0	f	f	f	f	f
lb/10^3 gal transported						
typical	0 - 0.01	f	f	f	f	f
extreme	0 - 0.08	f	f	f	f	f
Return with vapor						
mg/liter transported						
typical	0 - 13.0	f	f	f	f	f
extreme	0 - 44.0	f	f	f	f	f
lb/10^3 gal transported						
typical	0 - 0.11	f	f	f	f	f
extreme	0 - 0.37	f	f	f	f	f

[a]Reference 2. Gasoline factors represent emissions of nonmethane-nonethane VOC, since methane and ethane constitute a negligible weight fraction of the evaporative emissions from gasoline. The example gasoline has an RVP of 10 psia.
[b]The example crude oil has an RVP of 5 psia.
[c]Loading emission factors are calculated using Equation 1 for a dispensed product temperature of 60°F.
[d]Reference 2.
[e]Not normally used.
[f]Unavailable.

TABLE 4.4-6. TOTAL ORGANIC EMISSION FACTORS FOR PETROLEUM MARINE VESSEL SOURCES[a]

Emission source	Gasoline[b]	Crude oil[c]	Jet naphtha (JP-4)	Jet kerosene	Distillate oil No. 2	Residual oil No. 6
Loading operations						
Ships/ocean barges						
mg/liter transferred	d	73	60	0.63	0.55	0.004
lb/10^3 gal transferred	d	0.61	0.50	0.005	0.005	0.00004
Barges						
mg/liter transferred	d	120	150	1.60	1.40	0.011
lb/10^3 gal transferred	d	1.0	1.2	0.013	0.012	0.00009
Tanker ballasting						
mg/liter ballast water	100	e	f	f	f	f
lb/10^3 gal ballast water	0.8	e	f	f	f	f
Transit						
mg/week-liter transported	320	150	84	0.60	0.54	0.003
lb/week-10^3 gal transported	2.7	1.3	0.7	0.005	0.005	3×10^{-5}

[a]Emission factors are calculated for a dispensed product temperature of 60°F.
[b]Factors shown for gasoline represent nonmethane-nonethane VOC emissions. The example gasoline has an RVP of 10 psia.
[c]Nonmethane-nonethane VOC emission factors for a typical crude oil are 15% lower than the total organic factors shown. The example crude oil has an RVP of 5 psia.
[d]See Table 4.4-2 for these emission factors.
[e]See Table 4.4-4 for these emission factors.
[f]Unavailable.

Emissions from underground tank filling operations at service stations can be reduced by the use of a vapor balance system such as in Figure 4.4-5 (termed Stage I vapor control). The vapor balance system employs a hose that returns gasoline vapors displaced from the underground tank to the tank truck cargo compartments being emptied. The control efficiency of the balance system ranges from 93 to 100 percent. Organic emissions from underground tank filling operations at a service station employing a vapor balance system and submerged filling are not expected to exceed 40 milligrams per liter of transferred gasoline.

A second source of vapor emissions from service stations is underground tank breathing. Breathing losses occur daily and are attributable to gasoline evaporation and barometric pressure changes. The frequency with which gasoline is withdrawn from the tank, allowing fresh air to enter to enhance evaporation, also has a major effect on the quantity of these emissions. An average breathing emission rate is 120 milligrams per liter of throughput.

TABLE 4.4-7. EVAPORATIVE EMISSIONS FROM GASOLINE SERVICE STATION OPERATIONS

Emission source	Emission rate mg/liter throughput	Emission rate lb/10^3 gal throughput
Filling underground tank		
Submerged filling[a]	880	7.3
Splash filling[a]	1,380	11.5
Balanced submerged filling	40	0.3
Underground tank breathing and emptying[b]	120	1.0
Vehicle refueling operations		
Displacement losses (uncontrolled)	1,320	11.0
Displacement losses (controlled)	132	1.1
Spillage	80	0.7

[a]These factors are calculated using Equation 1 for a gasoline temperature of 60°F and RVP of 10 psia.
[b]Includes any vapor loss between underground tank and gas pump.

Motor Vehicle Refueling - Service station vehicle refueling activity also produces evaporative emissions. Vehicle refueling emissions come from vapors displaced from the automobile tank by dispensed gasoline and from spillage. The quantity of displaced vapors depends on gasoline temperature, auto tank temperature, gasoline RVP and dispensing rate. It is estimated that the uncontrolled emissions from vapors displaced during vehicle refueling average 1,320 milligrams per liter of dispensed gasoline.[5,12]

Spillage loss is made up of contributions from prefill and postfill nozzle drip and from spit-back and overflow from the vehicle's fuel tank filler pipe during filling. The amount of spillage loss can depend on several variables, including service station business characteristics, tank configuration, and operator techniques. An average spillage loss is 80 milligrams per liter of dispensed gasoline.[5,12]

Control methods for vehicle refueling emissions are based on conveying the vapors displaced from the vehicle fuel tank to the underground storage tank vapor space through the use of a special hose and nozzle, as depicted in Figure 4.4-7 (termed Stage II vapor control). In "balance" vapor control systems, the vapors are conveyed by natural pressure differentials established during refueling. In "vacuum assist" systems, the conveyance of vapors from the auto fuel tank to the underground storage tank is assisted by a vacuum pump. Although vapor control systems for vehicle refueling activity are not currently in widespread operation at service stations, tests on a few systems have indicated overall system control efficiencies in the range of 88 to 92 percent.[5,12]

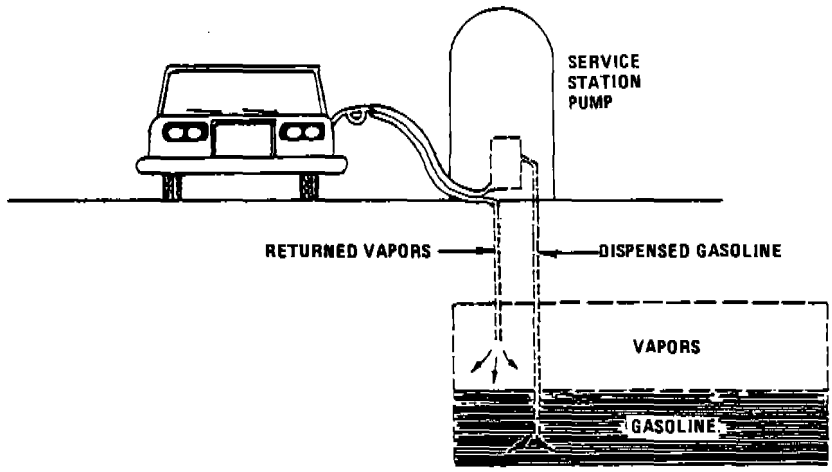

Figure 4.4-7. Automobile refueling vapor recovery system.

References for Section 4.4

1. C. E. Burklin and R. L. Honercamp, Revision of Evaporative Hydrocarbon Emission Factors, EPA-450/3-76-039, U. S. Environmental Protection Agency, Research Triangle Park, NC, August 1976.

2. G. A. LaFlam, S. Osbourn and R. L. Norton, Revision of Tank Truck Loading Hydrocarbon Emission Factors, Pacific Environmental Services, Inc., Durham, NC, May 1982.

3. G. A. LaFlam, Revision of Marine Vessel Evaporative Emission Factors, Pacific Environmental Services, Inc., Durham, NC, November 1984.

4. Evaporation Loss from Tank Cars, Tank Trucks and Marine Vessels, Bulletin No. 2514, American Petroleum Institute, Washington, DC, 1959.

5. C. E. Burklin, et al., A Study of Vapor Control Methods for Gasoline Marketing Operations, EPA-450/3-75-046A and -046B, U. S. Environmental Protection Agency, Research Triangle Park, NC, May 1975.

6. Bulk Gasoline Terminals - Background Information for Promulgated Standards, EPA-450/3-80-038b, U. S. Environmental Protection Agency, Research Triangle Park, NC, August 1983.

7. Atmospheric Hydrocarbon Emissions from Marine Vessel Transfer Operations, Publication 2514A, American Petroleum Institute, Washington, DC, 1981.

8. C. E. Burklin, et al., Background Information on Hydrocarbon Emissions from Marine Terminal Operations, EPA-450/3-76-038a and -038b, U. S. Environmental Protection Agency, Research Triangle Park, NC, November 1976.

9. Rules for the Protection of the Marine Environment Relating to Tank Vessels Carrying Oil in Bulk, 45 FR 43705, June 30, 1980.

10. R. A. Nichols, Analytical Calculation of Fuel Transit Breathing Loss, Chevron USA, Inc., San Francisco, CA, March 21, 1977.

11. R. A. Nichols, Tank Truck Leakage Measurements, Chevron USA, Inc., San Francisco, CA, June 7, 1977.

12. Investigation of Passenger Car Refueling Losses: Final Report, 2nd Year Program, APTD-1453, U. S. Environmental Protection Agency, Research Triangle Park, NC, September 1972.

4.5 CUTBACK ASPHALT, EMULSIFIED ASPHALT AND ASPHALT CEMENT

4.5.1 General[1-3]

Asphalt surfaces and pavements are composed of compacted aggregate and an asphalt binder. Aggregate materials are produced from rock quarries as manufactured stone or are obtained from natural gravel or soil deposits. Metal ore refining processes produce artificial aggregates as a byproduct. In asphalt, the aggregate performs three functions. It transmits the load from the surface to the base course, takes the abrasive wear of traffic, and provides a nonskid surface. The asphalt binder holds the aggregate together, preventing displacement and loss of aggregate and providing a waterproof cover for the base.

Asphalt binders take the form of asphalt cement (the residue of the distillation of crude oils) and liquified asphalts. To be used for pavement, asphalt cement, which is semisolid, must be heated prior to mixing with aggregate. The resulting hot mix asphalt concrete is generally applied in thicknesses of from two to six inches. Liquified asphalts are (1) asphalt cutbacks (asphalt cement thinned or "cutback" with volatile petroleum distillates such as naptha, kerosene, etc.) and (2) asphalt emulsions (nonflammable liquids produced by combining asphalt and water with an emulsifying agent, such as soap). Liquified asphalts are used in tack and seal operations, in priming roadbeds for hot mix application, and for paving operations up to several inches thick.

Cutback asphalts fall into three broad categories: rapid cure (RC), medium cure (MC), and slow cure (SC) road oils. SC, MC and RC cutbacks are prepared by blending asphalt cement with heavy residual oils, kerosene-type solvents, or naptha and gasoline solvents, respectively. Depending on the viscosity desired, the proportions of solvent added generally range from 25 to 45 percent by volume.

Emulsified asphalts are of two basic types. One type relies on water evaporation to cure. The other type (cationic emulsions) relies on ionic bonding of the emulsion and the aggregate surface. Emulsified asphalt can substitute for cutback in almost any application. Emulsified asphalts are gaining in popularity, because of the energy and environmental problems associated with the use of cutback asphalts.

4.5.2 Emissions[1,2]

The primary pollutants of concern from asphalts and asphalt paving operations are volatile organic compounds (VOC). Of the three types of asphalts, the major source of VOC is cutback. Only minor amounts of VOC are emitted from emulsified asphalts and asphalt cement.

VOC emissions from cutback asphalts result from the evaporation of the petroleum distillate solvent, or diluent, used to liquify the asphalt cement. Emissions occur at both the job site and the mixing plant. At the job site, VOCs are emitted from the equipment used to apply the asphaltic product and from the road surface. At the mixing plant, VOCs are released during mixing and stockpiling. The largest source of emissions, however, is the road surface itself.

For any given amount of cutback asphalt, total emissions are believed to be the same, regardless of stockpiling, mixing and application times. The two major variables affecting both the quantity of VOC emitted and the time over which emissions occur are the type and the quantity of petroleum distillate used as a diluent. As an approximation, long term emissions from cutback asphalts can be estimated by assuming that 95 percent of the diluent evaporates from rapid cure (RC) cutback asphalts, 70 percent from medium cure (MC) cutbacks, and about 25 percent from slow cure (SC) asphalts, by weight percent. Some of the diluent appears to be retained permanently in the road surface after application. Limited test data suggest that, from rapid cure (RC) asphalt, 75 percent of the total diluent loss occurs on the first day after

application, 90 percent occurs within the first month, and 95 percent in three to four months. Evaporation takes place more slowly from medium cure (MC) asphalts, with roughly 20 percent of the diluent being emitted during the first day, 50 percent during the first week, and 70 percent after three to four months. No measured data are available for slow cure (SC) asphalts, although the quantity emitted is believed to be considerably less than with either rapid or medium cure asphalts, and the time during which emissions take place is expected to be considerably longer (Figure 4.5-1). An example calculation for determining VOC emissions from cutback asphalts is given below:

Example: Local records indicate that 10,000 kg of RC cutback asphalt (containing 45 percent diluent, by volume) was applied in a given area during the year. Calculate the mass of VOC emitted during the year from this application.

To determine VOC emissions, the volume of diluent present in the cutback asphalt must first be determined. Because of density of naptha (0.7 kg/l) differs from that of asphalt cement (1.1 kg/l), the following equations should be solved to determine the volume of diluent (x) and the volume of asphalt cement (y) in the cutback asphalt:

$$10{,}000 \text{ kg cutback asphalt} = (\text{x liter, diluent}) \cdot \left(\frac{0.7 \text{ kg}}{\text{liter}}\right) + (\text{y liter, asphalt cement}) \cdot \left(\frac{1.1 \text{ kg}}{\text{liter}}\right)$$

and

$$\text{x liter, diluent} = 0.45\ (\text{x liter, diluent} + \text{y liter, asphalt cement})$$

From these equations, the volume of diluent present in the cutback asphalt is determined to be about 4900 liters, or about 3400 kg. Assuming that 95 percent of this is evaporative VOC, emissions are then: 3400 kg x 0.95 = 3200 kg (i.e., 32% by weight, of the cutback asphalt eventually evaporates).

These equations can be used for medium cure and slow cure asphalts by assuming typical diluent densities of 0.8 and 0.9 kg/liter, respectively. Of course, if actual density values are known from local records, they should be used in the above equations rather than typical values. Also, if different diluent contents are used, they should also be reflected in the above calculations. If actual diluent contents are not known, a typical value of 35 percent may be assumed for inventory purposes.

In lieu of solving the equations in the above example, Table 4.5-1 may be used to estimate long term emissions from cutback asphalts. Table 4.5-1 directly yields long term emissions as a function of the volume of diluent added to the cutback and of the density of the diluents and asphalt cement used in the cutback asphalt. If short term emissions are to be estimated, Figure 4.5-1 should be used in conjunction with Table 4.5-1.

No control devices are employed to reduce evaporative emissions from cutback asphalts. Asphalt emulsions are typically used in place of cutback asphalts to eliminate VOC emissions.

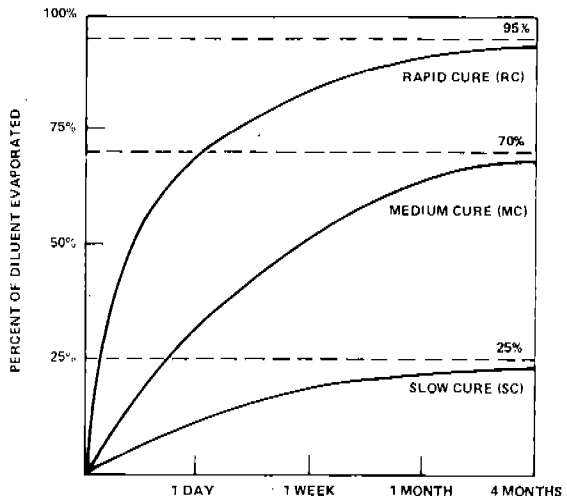

Figure 4.5-1. Percent of diluent evaporated from cutback asphalt over time.

TABLE 4.5-1. EVAPORATIVE VOC EMISSIONS FROM CUTBACK ASPHALTS AS A FUNCTION OF DILUENT CONTENT AND CUTBACK ASPHALT TYPE[a]

EMISSION FACTOR RATING: C

Type of Cutback[b]	Percent, by Volume, of Diluent in Cutback[c]		
	25%	35%	45%
Rapid cure	17	24	32
Medium cure	14	20	26
Slow cure	5	8	10

[a]These numbers represent the percent, by weight, of cutback asphalt evaporated. Factors are based on References 1 and 2.

[b]Typical densities assumed for diluents used in RC, MC and SC cutbacks are 0.7, 0.8 and 0.9 kg/liter, respectively.

[c]Diluent contents typically range between 25-45%, by volume. Emissions may be linearly interpolated for any given type of cutback between these values.

References for Section 4.5

1. R. Keller and R. Bohn, *Nonmethane Volatile Organic Emissions from Asphalt Cement and Liquified Asphalts*, EPA-450/3-78-124, U.S. Environmental Protection Agency, Research Triangle Park, NC, December 1978.

2. F. Kirwan and C. Maday, *Air Quality and Energy Conservation Benefits from Using Emulsions To Replace Asphalt Cutbacks in Certain Paving Operations*, EPA-450/2-78-004, U.S. Environmental Protection Agency, Research Triangle Park, NC, January 1978.

3. David W. Markwordt, *Control of Volatile Organic Compounds from Use of Cutback Asphalt*, EPA-450/2-77-037, U.S. Environmental Protection Agency, Research Triangle Park, NC, December 1977.

4.6 SOLVENT DEGREASING

4.6.1 General[1,2]

Solvent degreasing (or solvent cleaning) is the physical process of using organic solvents to remove grease, fats, oils, wax or soil from various metal, glass or plastic items. The types of equipment used in this method are categorized as cold cleaners, open top vapor degreasers, or conveyorized degreasers. Nonaqueous solvents such as petroleum distillates, chlorinated hydrocarbons, ketones and alcohols are used. Solvent selection is based on the solubility of the substance to be removed and on the toxicity, flammability, flash point, evaporation rate, boiling point, cost and several other properties of the solvent.

The metalworking industries are the major users of solvent degreasing, i.e., automotive, electronics, plumbing, aircraft, refrigeration and business machine industries. Solvent cleaning is also used in industries such as printing, chemicals, plastics, rubber, textiles, glass, paper and electric power. Most repair stations for transportation vehicles and electric tools use solvent cleaning at least part of the time. Many industries use water based alkaline wash systems for degreasing, and since these systems emit no solvent vapors to the atmosphere, they are not included in this discussion.

Cold Cleaners - The two basic types of cold cleaners are maintenance and manufacturing. Cold cleaners are batch loaded, nonboiling solvent degreasers, usually providing the simplest and least expensive method of metal cleaning. Maintenance cold cleaners are smaller, more numerous and generally using petroleum solvents as mineral spirits (petroleum distillates and Stoddard solvents). Manufacturing cold cleaners use a wide variety of solvents, which perform more specialized and higher quality cleaning with about twice the average emission rate of maintenance cold cleaners. Some cold cleaners can serve both purposes.

Cold cleaner operations include spraying, brushing, flushing and immersion. In a typical maintenance cleaner (Figure 4.6-1), dirty parts are cleaned manually by spraying and then soaking in the tank. After cleaning, the parts are either suspended over the tank to drain or are placed on an external rack that routes the drained solvent back into the cleaner. The cover is intended to be closed whenever parts are not being handled in the cleaner. Typical manufacturing cold cleaners vary widely in design, but there are two basic tank designs, the simple spray sink and the dip tank. Of these, the dip tank provides more thorough cleaning through immersion, and often is made to improve cleaning efficiency by agitation. Small cold cleaning operations may be numerous in urban areas. However, because of the small quantity of emissions from each operation, the large number of individual sources within an urban area, and the application of small cold cleaning to industrial

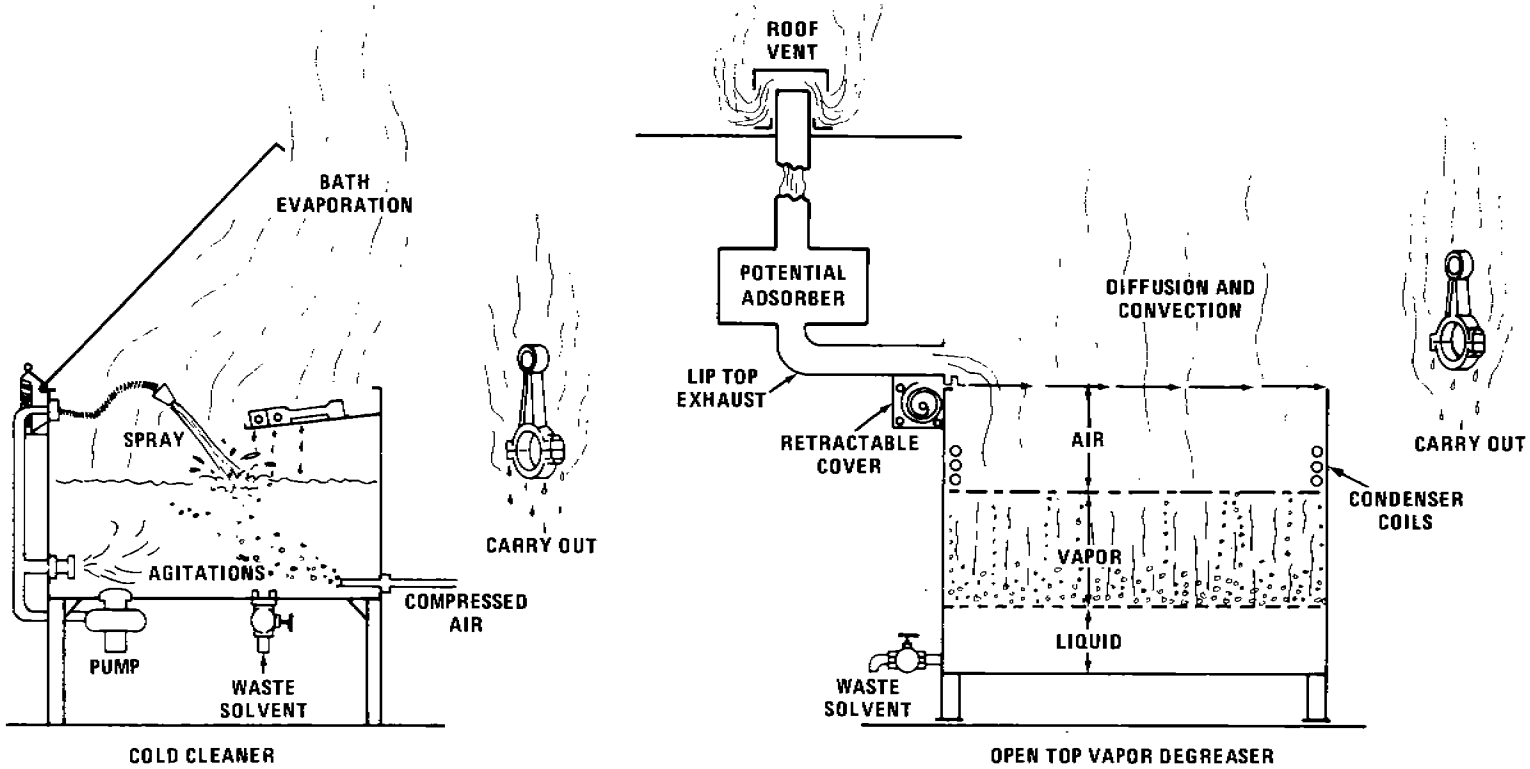

Figure 4.6-1. Degreaser emission points.

uses not directly associated with degreasing, it is difficult to identify individual small cold cleaning operations. For these reasons, factors are provided in Table 4.6-1 to estimate emissions from small cold cleaning operations over large urban geographical areas. Factors in Table 4.6-1 are for nonmethane VOC and include 25 percent 1,1,1 - trichloroethane, methylene chloride and trichlorotrifluoroethane.

TABLE 4.6-1. NONMETHANE VOC EMISSIONS FROM SMALL COLD CLEANING DEGREASING OPERATIONS[a]

EMISSION FACTOR RATING: C

Operating period	Per capita emission factor
Annual	1.8 kg 4.0 lb
Diurnal	5.8 g 0.013 lb

[a]Reference 3.
[b]Assumes a 6 day operating week (313 days/yr).

Open Top Vapor Systems - Open top vapor degreasers are batch loaded boiling degreasers that clean with condensation of hot solvent vapor on colder metal parts. Vapor degreasing uses halogenated solvents (usually perchloroethylene, trichloroethylene, or 1,1,1-trichloroethane), because they are not flammable and their vapors are much heavier than air.

A typical vapor degreaser (Figure 4.6-1) is a sump containing a heater that boils the solvent to generate vapors. The height of these pure vapors is controlled by condenser coils and/or a water jacket encircling the device. Solvent and moisture condensed on the coils are directed to a water separator, where the heavier solvent is drawn off the bottom and is returned to the vapor degreaser. A "freeboard" extends above the top of the vapor zone to minimize vapor escape. Parts to be cleaned are immersed in the vapor zone, and condensation continues until they are heated to the vapor temperature. Residual liquid solvent on the parts rapidly evaporates as they are slowly removed from the vapor zone. Lip mounted exhaust systems carry solvent vapors away from operating personnel. Cleaning action is often increased by spraying the parts with solvent below the vapor level or by immersing them in the liquid solvent bath. Nearly all vapor degreasers are equipped with a water separator which allows the solvent to flow back into the degreaser.

Emission rates are usually estimated from solvent consumption data for the particular degreasing operation under consideration.

Solvents are often purchased specifically for use in degreasing and are not used in any other plant operations. In these cases, purchase records provide the necessary information, and an emission factor of 1,000 kg of volatile organic emissions per metric ton of solvent purchased can be applied, based on the assumption that all solvent purchased is eventually emitted. When information on solvent consumption is not available, emission rates can be estimated if the number and type of degreasing units are known. The factors in Table 4.6-2 are based on the number of degreasers and emissions produced nationwide and may be considerably in error when applied to one particular unit.

The expected effectiveness of various control devices and procedures is listed in Table 4.6-3. As a first approximation, this efficiency can be applied without regard for the specific solvent being used. However, efficiencies are generally higher for more volatile solvents. These solvents also result in higher emission rates than those computed from the "average" factors listed in Table 4.6-2.

Conveyorized Degreasers - Conveyorized degreasers may operate with either cold or vaporized solvent, but they merit separate consideration because they are continuously loaded and are almost always hooded or enclosed. About 85 percent are vapor types, and 15 percent are nonboiling.

4.6.2 Emissions and Controls[1-3]

Emissions from cold cleaners occur through (1) waste solvent evaporation, (2) solvent carryout (evaporation from wet parts), (3) solvent bath evaporation, (4) spray evaporation, and (5) agitation (Figure 4.6-1). Waste solvent loss, cold cleaning's greatest emission source, can be reduced through distillation and transport of waste solvent to special incineration plants. Draining cleaned parts for at least 15 seconds reduces carryout emissions. Bath evaporation can be controlled by using a cover regularly, by allowing an adequate freeboard height and by avoiding excessive drafts in the workshop. If the solvent used is insoluble in, and heavier than, water, a layer of water two to four inches thick covering the halogenated solvent can also reduce bath evaporation. This is known as a "water cover". Spraying at low pressure also helps to reduce solvent loss from this part of the process. Agitation emissions can be controlled by using a cover, by agitating no longer than necessary, and by avoiding the use of agitation with low volatility solvents. Emissions of low volatility solvents increase significantly with agitation. However, contrary to what one might expect, agitation causes only a small increase in emissions of high volatility solvents. Solvent type is the variable which most affects cold cleaner emission rates, particularly the volatility at operating temperatures.

TABLE 4.6-2. SOLVENT LOSS EMISSION FACTORS FOR DEGREASING OPERATIONS

EMISSION FACTOR RATING: C

Type of degreasing	Activity measure	Uncontrolled organic emission factor[a]	
All[b]	Solvent consumed	1,000 kg/Mg	2,000 lb/ton
Cold cleaner			
Entire unit[c]	Units in operation	0.30 Mg/yr/unit	0.33 tons/yr/unit
Waste solvent loss		0.165 Mg/yr/unit	0.18 tons/yr/unit
Solvent carryout		0.075 Mg/yr/unit	0.08 tons/yr/unit
Bath and spray evaporation		0.06 Mg/yr/unit	0.07 tons/yr/unit
Entire unit	Surface area and duty cycle[d]	0.4 kg/hr/m^2	0.08 lb/hr/ft^2
Open top vapor			
Entire unit	Units in operation	9.5 Mg/yr/unit	10.5 tons/yr/unit
Entire unit	Surface area and duty cycle[e]	0.7 kg/hr/m^2	0.15 lb/hr/ft^2
Conveyorized, vapor			
Entire unit	Units in operation	24 Mg/yr/unit	26 tons/yr/unit
Conveyorized, nonboiling			
Entire unit	Units in operation	47 Mg/yr/unit	52 tons/yr/unit

[a]100% nonmethane VOC.
[b]Solvent consumption data will provide much more accurate emission estimates than any of the other factors presented.
[c]Emissions generally would be higher for manufacturing units and lower for maintenance units.
[d]Reference 4, Appendix C-6. For trichloroethane degreaser.
[e]For trichloroethane degreaser. Does not include waste solvent losses.

TABLE 4.6-3. PROJECTED EMISSION REDUCTION FACTORS FOR SOLVENT DEGREASING[a]

System	Cold cleaner		Vapor degreaser		Conveyorized degreaser	
	A	B	A	B	A	B
Control devices						
Cover or enclosed design	X	X	X	X	X	X
Drainage facility	X	X	X			X
Water cover, refrigerated chiller, carbon adsorption or high freeboard[b]		X		X		X
Solid, fluid spray stream[c]		X		X		
Safety switches and thermostats				X		X
Emission reduction from control devices (%)	13-38	NA[d]	20-40	30-60		40-60
Operating procedures						
Proper use of equipment	X	X	X	X	X	X
Use of high volatility solvent		X				
Waste solvent reclamation	X	X	X	X	X	X
Reduced exhaust ventilation			X	X	X	X
Reduced conveyor or entry speed			X	X	X	X
Emission reduction from operating procedures(%)	15-45	NA[d]	15-35	20-40	20-30	20-30
Total emission reduction(%)	28-83[e]	55-69[f]	30-60	45-75	20-30	50-70

[a]Reference 2. Ranges of emission reduction present poor to excellent compliance. X indicates devices or procedures which will effect the given reductions. Letters A and B indicate different control device circumstances. See Appendix B of Reference 2.
[b]Only one of these major control devices would be used in any degreasing system. System B could employ any of them. Vapor degreaser system B could employ any except water cover. Conveyorized degreaser system B could employ any except water cover and high freeboard.
[c]If agitation by spraying is used, the spray should not be a shower type.
[d]Breakout between control equipment and operating procedures is not available.
[e]A manual or mechanically assisted cover would contribute 6-18% reduction; draining parts 15 seconds within the degreaser, 7-20%; and storing waste solvent in containers, an additional 15-45%.
[f]Percentages represent average compliance.

As with cold cleaning, open top vapor degreasing emissions relate heavily to proper operating methods. Most emissions are due to (6) diffusion and convection, which can be reduced by using an automated cover, by using a manual cover regularly, by spraying below the vapor level, by optimizing work loads or by using a refrigerated freeboard chiller (for which a carbon adsorption unit would be substituted on larger units). Safety switches and thermostats that prevent emissions during malfunctions and abnormal operation also reduce diffusion and convection of the vaporized solvent. Additional sources are (7) solvent carryout, (8) exhaust systems and (9) waste solvent evaporation. Carryout is directly affected by the size and shape of the workload, by racking of parts and by cleaning and drying time. Exhaust emissions can be nearly eliminated by a carbon adsorber that collects the solvent vapors for reuse. Waste solvent evaporation is not so much a problem with

vapor degreasers as it is with cold cleaners, because the halogenated solvents used are often distilled and recycled by solvent recovery systems.

Because of their large workload capacity and the fact that they are usually enclosed, conveyorized degreasers emit less solvent per part cleaned than do either of the other two types of degreaser. More so than operating practices, design and adjustment are major factors affecting emissions, the main source of which is carryout of vapor and liquid solvents.

References for Section 4.6

1. P.J. Marn, et al., Source Assessment: Solvent Evaporation - Degreasing, EPA Contract No. 68-02-1874. Monsanto Research Corporation, Dayton, OH, January 1977.

2. Jeffrey Shumaker, Control of Volatile Organic Emissions from Solvent Metal Cleaning, EPA-450/2-77-022, U.S. Environmental Protection Agency, Research Triangle Park, NC, November 1977.

3. W.H. Lamason, "Technical Discussion of Per Capita Emission Factors for Several Area Sources of Volatile Organic Compounds", Office of Air Quality Planning and Standards, U.S. Environmental Protection Agency, Research Triangle Park, NC, March 15, 1981, unpublished.

4. K.S. Suprenant and D.W. Richards, Study To Support New Source Performance Standards for Solvent Metal Cleaning Operations, EPA Contract No. 68-02-1329, Dow Chemical Company, Midland, MI, June 1976.

4.7 WASTE SOLVENT RECLAMATION

4.7.1 Process Description[1-4]

Waste solvents are organic dissolving agents that are contaminated with suspended and dissolved solids, organics, water, other solvents, and/or any substance not added to the solvent during its manufacture. Reclamation is the process of restoring a waste solvent to a condition that permits its reuse, either for its original purpose or for other industrial needs. All waste solvent is not reclaimed, because the cost of reclamation may exceed the value of the recovered solvent.

Industries that produce waste solvents include solvent refining, polymerization processes, vegetable oil extraction, metallurgical operations, pharmaceutical manufacture, surface coating, and cleaning operations (dry cleaning and solvent degreasing). The amount of solvent recovered from the waste varies from about 40 to 99 percent, depending on the extent and characterization of the contamination and on the recovery process employed.

Design parameters and economic factors determine whether solvent reclamation is accomplished as a main process by a private contractor, as an integral part of a main process (such as solvent refining), or as an added process (as in the surface coating and cleaning industries). Most contract solvent reprocessing operations recover halogenated hydrocarbons (e.g., methylene chloride, trichlorotrifluoroethane, and trichloroethylene) from degreasing, and/or aliphatic, aromatic, and naphthenic solvents such as those used in the paint and coatings industry. They may also reclaim small quantities of numerous specialty solvents such as phenols, nitriles, and oils.

The general reclamation scheme for solvent reuse is illustrated in Figure 4.7-1. Industrial operations may not incorporate all of these steps. For instance, initial treatment is necessary only when liquid waste solvents contain dissolved contaminants.

4.7.1.1 Solvent Storage and Handling - Solvents are stored before and after reclamation in containers ranging in size from 55 gallon (0.2 m^3) drums to tanks with capacities of 20,000 gallons (75 m^3) or more. Storage tanks are of fixed or floating roof design. Venting systems prevent solvent vapors from creating excessive pressure or vacuum inside fixed roof tanks.

Handling includes loading waste solvent into process equipment and filling drums and tanks prior to transport and storage. The filling is most often done through submerged or bottom loading.

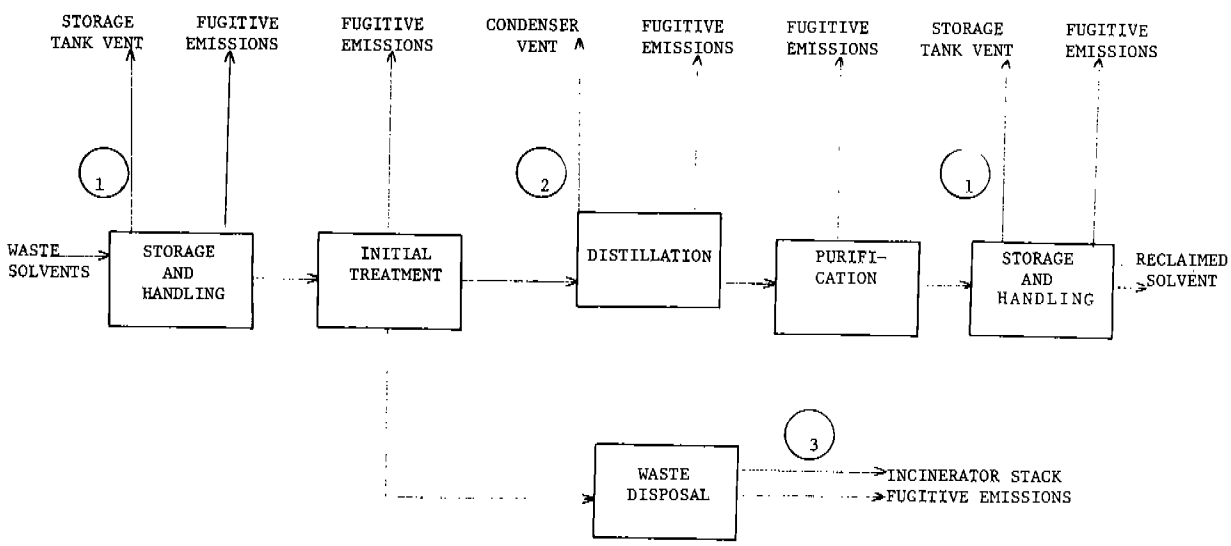

Figure 4.7-1. General waste solvent reclamation scheme and emission points.[1]

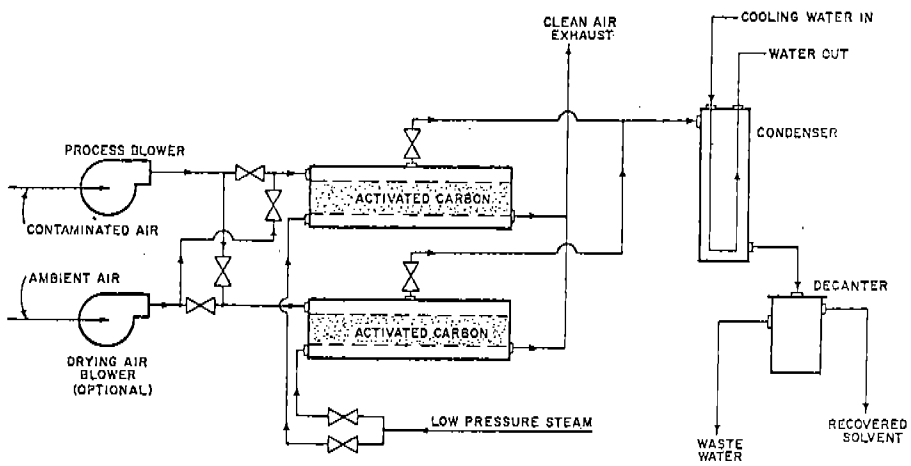

Figure 4.7-2. Typical fixed bed activated carbon solvent recovery system.[6]

Table 4.7-1. EMISSION FACTORS FOR SOLVENT RECLAIMING[a]

EMISSION FACTOR RATING: D

Source	Criteria pollutant	Emission factor average	
		lb/ton	kg/MT
Storage tank vent[b]	Volatile organics	0.02 (0.004-0.09)	0.01 (0.002-0.04)
Condenser vent	Volatile organics	3.30 (0.52-8.34)	1.65 (0.26-4.17)
Incinerator stack[c]	Volatile organics	0.02	0.01
Incinerator stack	Particulates	1.44 (1.1-2.0)	0.72 (0.55-1.0)
Fugitive emissions			
Spillage[c]	Volatile organics	0.20	0.10
Loading	Volatile organics	0.72 (0.00024-1.42)	0.36 (0.00012-0.71)
Leaks	Volatile organics	NA	NA
Open sources	Volatile organics	NA	NA

[a]Reference 1. Data obtained from state air pollution control agencies and presurvey sampling. All emission factors are for uncontrolled process equipment, except those for the incinerator stack. (Reference 1 does not, however, specify what the control is on this stack.) Average factors are derived from the range of data points available. Factors for these sources are given in terms of pounds per ton and kilograms per metric ton of reclaimed solvent. Ranges in parentheses.
NA - not available.
[b]Storage tank is of fixed roof design.
[c]Only one value available.

4.7.1.2 Initial Treatment - Waste solvents are initially treated by vapor recovery or mechanical separation. Vapor recovery entails removal of solvent vapors from a gas stream in preparation for further reclaiming operations. In mechanical separation, undissolved solid contaminants are removed from liquid solvents.

Vapor recovery or collection methods employed include condensation, adsorption and absorption. Technical feasibility of the method chosen depends on the solvent's miscibility, vapor composition and concentration, boiling point, reactivity, and solubility, as well as several other factors.

Condensation of solvent vapors is accomplished by water cooled condensers and refrigeration units. For adequate recovery, a solvent vapor concentration well above 0.009 grains per cubic foot (20 mg/m^3) is required. To avoid explosive mixtures of a flammable solvent and air in the process gas stream, air is replaced with an inert gas, such as nitrogen. Solvent vapors that escape condensation are recycled through the main process stream or recovered by adsorption or absorption.

Activated carbon adsorption is the most common method of capturing solvent emissions. Adsorption systems are capable of recovering solvent vapors in concentrations below 0.002 grains per cubic foot (4 mg/m^3) of air. Solvents with boiling points of 290°F (200°C) or more do not desorb effectively with the low pressure steam commonly used to regenerate the carbon beds. Figure 4.7-2 shows a flow diagram of a typical fixed bed activated carbon solvent recovery system. The mixture of steam and solvent vapor passes to a water cooled condenser. Water immiscible solvents are simply decanted to separate the solvent, but water miscible solvents must be distilled, and solvent mixtures must be both decanted and distilled. Fluidized bed operations are also in use.

Absorption of solvent vapors is accomplished by passing the waste gas stream through a liquid in scrubbing towers or spray chambers. Recovery by condensation and adsorption results in a mixture of water and liquid solvent, while absorption recovery results in an oil and solvent mixture. Further reclaiming procedures are required, if solvent vapors are collected by any of these three methods.

Initial treatment of liquid waste solvents is accomplished by mechanical separation methods. This includes both removing water by decanting and removing undissolved solids by filtering, draining, settling, and/or centrifuging. A combination of initial treatment methods may be necessary to prepare waste solvents for further processing.

4.7.1.3 Distillation - After initial treatment, waste solvents are distilled to remove dissolved impurities and to separate solvent mixtures. Separation of dissolved impurities is accomplished by simple batch, simple continuous, or steam distillation. Mixed solvents are separated by multiple simple distillation methods, such as batch or continuous rectification. These processes are shown in Figure 4.7-3.

In simple distillation, waste solvent is charged to an evaporator. Vapors are then continuously removed and condensed, and the resulting sludge or still bottoms are drawn off. In steam distillation, solvents

are vaporized by direct contact with steam which is injected into the evaporator. Simple batch, continuous, and steam distillations follow Path I in Figure 4.7-3.

The separation of mixed solvents requires multiple simple distillation or rectification. Batch and continuous rectification are represented by Path II in Figure 4.7-3. In batch rectification, solvent vapors pass through a fractionating column, where they contact condensed solvent (reflux) entering at the top of the column. Solvent not returned as reflux is drawn off as overhead product. In continuous rectification, the waste solvent feed enters continuously at an intermediate point in the column. The more volatile solvents are drawn off at the top, while those with higher boiling points collect at the bottom.

Design criteria for evaporating vessels depend on waste solvent composition. Scraped surface stills or agitated thin film evaporators are the most suitable for heat sensitive or viscous materials. Condensation is accomplished by barometric or shell and tube condensers. Azeotropic solvent mixtures are separated by the addition of a third solvent component, while solvents with higher boiling points, e.g., in the range of high flash naphthas (310°F, 155°C), are most effectively distilled under vacuum. Purity requirements for the reclaimed solvent determine the number of distillations, reflux ratios and processing time needed.

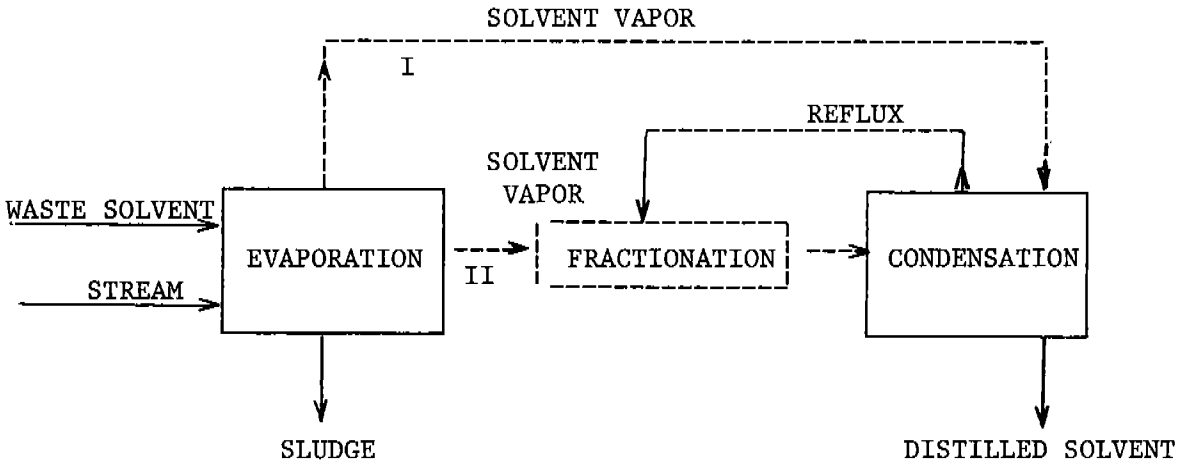

Figure 4.7-3. Distillation process for solvent reclaiming.[1]

4.7.1.4 Purification - After distillation, water is removed from solvent by decanting or salting. Decanting is accomplished with immiscible solvent and water which, when condensed, form separate liquid layers, one or the other of which can be drawn off mechanically. Additional cooling of the solvent/water mix before decanting increases the separation of the two components by reducing their solubility. In salting, solvent is passed through a calcium chloride bed, and water is removed by absorption.

During purification, reclaimed solvents are stabilized, if necessary. Buffers are added to virgin solvents to ensure that pH level is kept constant during use. To renew it, special additives are used during purification. The composition of these additives is considered proprietary.

4.7.1.5 Waste Disposal - Waste materials separated from solvents during initial treatment and distillation are disposed of by incineration, landfilling or deep well injection. The composition of such waste varies, depending on the original use of the solvent. But up to 50 percent is unreclaimed solvent, which keeps the waste product viscous yet liquid, thus facilitating pumping and handling procedures. The remainder consists of components such as oils, greases, waxes, detergents, pigments, metal fines, dissolved metals, organics, vegetable fibers, and resins.

About 80 percent of the waste from solvent reclaiming by private contractors is disposed of in liquid waste incinerators. About 14 percent is deposited in sanitary landfills, usually in 55 gallon drums. Deep well injection is the pumping of wastes between impermeable geologic strata. Viscous wastes may have to be diluted for pumping into the desired stratum level.

4.7.2 Emissions and Controls [1,3-5]

Volatile organic and particulate emissions result from waste solvent reclamation. Emission points include storage tank vents [1], condenser vents [2], incinerator stacks [3], and fugitive losses (numbers refer to Figures 4.7-1 and -3). Emission factors for these sources are given in Table 4.7-1.

Solvent storage results in volatile organic compound (VOC) emissions from solvent evaporation (Figure 4.7-1, emission point 1). The condensation of solvent vapors during distillation (Figure 4.7-3) also involves VOC emissions, and if steam ejectors are used, emission of steam and noncondensables as well (Figures 4.7-1 and -3, point 2). Incinerator stack emissions consist of solid contaminants that are oxidized and released as particulates, unburned organics, and combustion stack gases (Figure 4.7-1, point 3).

VOC emissions from equipment leaks, open solvent sources (sludge drawoff and storage from distillation and initial treatment operations), solvent loading, and solvent spills are classifed as fugitive. The former two sources are continuously released, and the latter two, intermittently.

Solvent reclamation is viewed by industry as a form of control in itself. Carbon adsorption systems can remove up to 95 percent of the solvent vapors from an air stream. It is estimated that less than 50 percent of reclamation plants run by private contractors use any control technology.

Volatile organic emissions from the storage of solvents can be reduced by as much as 98 percent by converting from fixed to floating roof tanks, although the exact percent reduction also depends on solvent evaporation rate, ambient temperature, loading rate, and tank capacity. Tanks may also be refrigerated or equipped with conservation vents which prevent air inflow and vapor escape until some preset vacuum or pressure develops.

Solvent vapors vented during distillation are controlled by scrubbers and condensers. Direct flame and catalytic afterburners can also be used to control noncondensables and solvent vapors not condensed during distillation. The time required for complete combustion depends on the flammability of the solvent. Carbon or oil adsorption may be employed also, as in the case of vent gases from the manufacture of vegetable oils.

Wet scrubbers are used to remove particulates from sludge incinerator exhaust gases, although they do not effectively control submicron particles.

Submerged rather than splash filling of storage tanks and tank cars can reduce solvent emissions from this source by more than 50 percent. Proper plant maintenance and loading procedures reduce emissions from leaks and spills. Open solvent sources can be covered to reduce these fugitive emissions.

References for Section 4.7

1. D. R. Tierney and T. W. Hughes, Source Assessment: Reclaiming of Waste Solvents - State of the Art, EPA-600/2-78/004f, U.S. Environmental Protection Agency, Cincinnati, OH, April 1978.

2. J. E. Levin and F. Scofield, "An Assessment of the Solvent Reclaiming Industry". Proceedings of the 170th Meeting of the American Chemical Society, Chicago, IL, 35(2):416-418, August 25-29, 1975.

3. H. M. Rowson, "Design Considerations in Solvent Recovery". Proceedings of the Metropolitan Engineers' Council on Air Resouces (MECAR) Symposium on New Developments in Air Pollutant Control, New York, NY, October 23, 1961, pp. 110-128.

4. J. C. Cooper and F. T. Cuniff, "Control of Solvent Emissions". Proceedings of the Metropolitan Engineers' Council on Air Resources (MECAR) Symposium on New Developments in Air Pollution Control, New York, NY, October 23, 1961, pp. 30-41.

5. W. R. Meyer, "Solvent Broke", Proceedings of TAPPI Testing Paper Synthetics Conference, Boston, MA, October 7-9, 1974, pp. 109-115.

6. Nathan R. Shaw, "Vapor Adsorption Technology for Recovery of Chlorinated Hydrocarbons and Other Solvents", Presented at the 80th Annual Meeting of the Air Pollution Control Association, Boston, MA, June 15-20, 1975.

4.8 TANK AND DRUM CLEANING

4.8.1 General

Rail tank cars, tank trucks and drums are used to transport about 700 different commodities. Rail tank cars and most tank trucks and drums are in dedicated service (carrying one commodity only) and, unless contaminated, are cleaned only prior to repair or testing. Nondedicated tank trucks (about 20,000, or 22 percent of the total in service) and drums (approximately 5.6 million, or 12.5 percent of the total) are cleaned after every trip.

4.8.1.1 Rail Tank Cars - Most rail tank cars are privately owned. Some cars, like those owned by the railroads, are operated for hire. The commodities hauled are 35 percent petroleum products, 20 percent organic chemicals, 25 percent inorganic chemicals, 15 percent compressed gases, and 5 percent food products. Petroleum products considered in this study are glycols, vinyls, acetones, benzenes, creosote, etc. Not included in these figures are gasoline, diesel oil, fuel oils, jet fuels, and motor oils, the greatest portion of these being transported in dedicated service.

Much tank car cleaning is conducted at shipping and receiving terminals, where the wastes go to the manufacturers' treatment systems. However, 30 to 40 percent is done at service stations operated by tank car owner/lessors. These installations clean waste of a wide variety of commodities, many of which require special cleaning methods.

A typical tank car cleaning facility cleans 4 to 10 cars per day. Car capacity varies from 10,000 to 34,000 gallons (40 - 130 m^3). Cleaning agents include steam, water, detergents and solvents, which are applied using steam hoses, pressure wands, or rotating spray heads placed through the opening in the top of the car. Scraping of hardened or crystallized products is often necessary. Cars carrying gases and volatile materials, and those needing to be pressure tested, must be filled or flushed with water. The average amount of residual material cleaned from each car is estimated to be 550 lb (250 kg). Vapors from car cleaning not flared or dissolved in water are dissipated to the atmosphere.

4.8.1.2 Tank Trucks - Two thirds of the tank trucks in service in the United States are operated for hire. Of these, 80 percent are used to haul bulk liquids. Most companies operate fleets of five trucks or less, and whenever possible, these trucks are assigned to dedicated service. Commodities hauled and cleaned are 15 percent petroleum products (except as noted in 4.8.1.1), 35 percent organic chemicals, 5 percent food products, and 10 percent other products.

Interior washing is carried out at many tank truck dispatch terminals. Cleaning agents include water, steam, detergents, bases, acids and solvents, which are applied with hand-held pressure wands or by

Turco or Butterworth rotating spray nozzles. Detergent, acidic or basic solutions are usually used until spent and then sent to treatment facilities. Solvents are recycled in a closed system, with sludges either incinerated or landfilled. The average amount of material cleaned from each trailer is 220 lb (100 kg). Vapors from volatile material are flared at a few terminals but most commonly are dissipated to the atmosphere. Approximately 60 gallons (0.23 m^3) of liquid are used per tank truck steam cleaning and 5500 gallons (20.9 m^3) for full flushing.

Table 4.8-1. EMISSION FACTORS FOR RAIL TANK CAR CLEANING[a]

EMISSION FACTOR RATING: D

Compound	Chemical Class: Vapor pressure	Chemical Class: Viscosity	Total emissions[a] lb/car	Total emissions[a] g/car
Ethylene glycol[b]	low	high	0.0007	0.3
Chlorobenzene[b]	medium	medium	0.0346	15.7
o-Dichlorobenzene[b]	low	medium	0.1662	75.4
Creosote[c]	low	high	5.1808	2350

[a]Reference 1. Emission factors are in terms of average weight of pollutant released per car cleaned.
[b]Two hour test duration.
[c]Eight hour test duration.

4.8.1.3 Drums - Both 55 and 30 gallon (0.2 and 0.11 m^3) drums are used to ship a vast variety of commodities, with organic chemicals (including solvents) accounting for 50 percent. The remaining 50 percent includes inorganic chemicals, asphaltic materials, elastromeric materials, printing inks, paints, food additives, fuel oils and other products.

Drums made entirely of 18 gauge steel have an average life, with total cleaning, of eight trips. Those with 20 gauge bodies and 18 gauge heads have an average life of three trips. Not all drums are cleaned, especially those of thinner construction.

Tighthead drums which have carried materials that are easy to clean are steamed or washed with base. Steam cleaning is done by inserting a nozzle into the drum, with vapors going to the atmosphere. Base washing is done by tumbling the drum with a charge of hot caustic solution and some pieces of chain.

Drums used to carry materials that are difficult to clean are burned out, either in a furnace or in the open. Those with tightheads have the tops cut out and are reconditioned as open head drums. Drum burning furnaces may be batch or continuous. Several gas burners bathe the drum in flame, burning away the contents, lining and outside paint in a nominal 4 minute period and at a temperature of at least 900° but

not more than 1000°F (480 - 540°C) to prevent warping of the drum. Emissions are vented to an afterburner or secondary combustion chamber, where the gases are raised to at least 1500°F (760°C) for a minimum of 0.5 seconds. The average amount of material removed from each drum is 4.4 lb (2 kg).

Table 4.8-2. EMISSION FACTORS FOR TANK TRUCK CLEANING[a]

EMISSION FACTOR RATING: D

Compound	Chemical Class		Total emissions	
	Vapor pressure	Viscosity	lb/truck	g/truck
Acetone	high	low	0.686	311
Perchloroethylene	high	low	0.474	215
Methyl methacrylate	medium	medium	0.071	32.4
Phenol	low	low	0.012	5.5
Propylene glycol	low	high	0.002	1.07

[a]Reference 1. One hour test duration.

4.8.2 Emissions and Controls

4.8.2.1 Rail Tank Cars and Tank Trucks - Atmospheric emissions from tank car and truck cleaning are predominantly volatile organic chemical vapors. To achieve a practical but representative picture of these emissions, the organic chemicals hauled by the carriers must be broken down into classes of high, medium and low viscosities and high, medium and low vapor pressures. This is because high viscosity materials do not drain readily, affecting the quantity of material remaining in the tank, and high vapor pressure materials volatilize more readily during cleaning and tend to lead to greater emissions.

Practical and economically feasible controls of atmospheric emissions from tank car and truck cleaning do not exist, except for containers transporting commodities that produce combustible gases and water soluble vapors (such as ammonia and chlorine). Gases which are displaced as tanks are filled are sent to a flare and burned. Water soluble vapors are absorbed in water and sent to the wastewater system. Any other emissions are vented to the atmosphere.

Tables 4.8-1 and 4.8-2 give emission factors for representative organic chemicals hauled by tank cars and trucks.

4.8.2.2 Drums - There is no control for emissions from steaming of drums. Solution or caustic washing yields negligible air emissions, because the drum is closed during the wash cycle. Atmospheric emissions from steaming or washing drums are predominantly organic chemical vapors.

Air emissions from drum burning furnaces are controlled by proper operation of the afterburner or secondary combustion chamber, where gases are raised to at least 1400°F (760°C) for a minimum of 0.5 seconds. This normally ensures complete combustion of organic materials and prevents the formation, and subsequent release, of large quantities of NO_x, CO and particulates. In open burning, however, there is no feasible way of controlling the release of incomplete combustion products to the atmosphere. Conversion of open cleaning operations to closed cycle cleaning and elimination of open air drum burning seem to be the only control alternatives immediately available.

Table 4.8-3 gives emission factors for representative criteria pollutants emitted from drum burning and cleaning.

TABLE 4.8-3. EMISSION FACTORS FOR DRUM BURNING[a]

EMISSION FACTOR RATING: E

Pollutant	Total Emissions			
	Controlled		Uncontrolled	
	lb/drum	g/drum	lb/drum	g/drum
Particulate	0.02646	12[b]	0.035	16
NO_x	0.00004	0.018	0.002	0.89
VOC	negligible		negligible	

[a]Reference 1. Emission factors are in terms of weight of pollutant released per drum burned, except for VOC, which are per drum washed.
[b]Reference 1, Table 17 and Appendix A.

Reference for Section 4.8

1. T. R. Blackwood, et al., Source Assessment: Rail Tank Car, Tank Truck, and Drum Cleaning, State of the Art, EPA-600/2-78-004g, U. S. Environmental Protection Agency, Research Triangle Park, NC, April 1978.

4.9 GRAPHIC ARTS

4.9.1 General

Process Description - The term "graphic arts" as used here means four basic processes of the printing industry: web offset lithography, web letterpress, rotogravure and flexography. Screen printing and manual and sheet fed techniques are not included in this discussion.

Printing may be performed on coated or uncoated paper and on other surfaces, as in metal decorating and some fabric coating (see Section 4.2, Industrial Surface Coating). The material to receive the printing is called the substrate. The distinction between printing and paper coating, which may employ rotogravure or lithographic methods, is that printing invariably involves the application of ink by a printing press. However, printing and paper coating have these elements in common: application of a relatively high solvent content material to the surface of a moving web or film, rapid solvent evaporation by movement of heated air across the wet surface, and solvent laden air exhausted from the system.

Printing inks vary widely in composition, but all consist of three major components: pigments, which produce the desired colors and are composed of finely divided organic and inorganic materials; binders, the solid components that lock the pigments to the substrate and are composed of organic resins and polymers or, in some inks, oils and rosins; and solvents, which dissolve or disperse the pigments and binders and are usually composed of organic compounds. The binder and solvent make up the "vehicle" part of the ink. The solvent evaporates from the ink into the atmosphere during the drying process.

Web Offset Lithography - Lithography, the process used to produce about 75 percent of books and pamphlets and an increasing number of newspapers, is characterized by a planographic image carrier (i.e., the image and nonimage areas are on the same plane). The image area is ink wettable and water repellant, and the nonimage area is chemically repellant to ink. The solution used to dampen the plate may contain 15 to 30 percent isopropanol, if the Dalgren dampening system is used.[8] When the image is applied to a rubber covered "blanket" cylinder and then transferred onto the substrate, the process is known as "offset" lithography. When a web (i.e., a continuous roll) of paper is employed with the offset process, this is known as web offset printing. Figure 4.9-1 illustrates a web offset lithography publication printing line. A web newspaper printing line contains no dryer, because the ink contains very little solvent, and somewhat porous paper is generally used.

Web offset employs "heatset" (i.e., heat drying offset) inks that dry very quickly. For publication work the inks contain about 40 percent solvent, and for newspaper work 5 percent solvent is used. In both cases, the solvents are usually petroleum derived

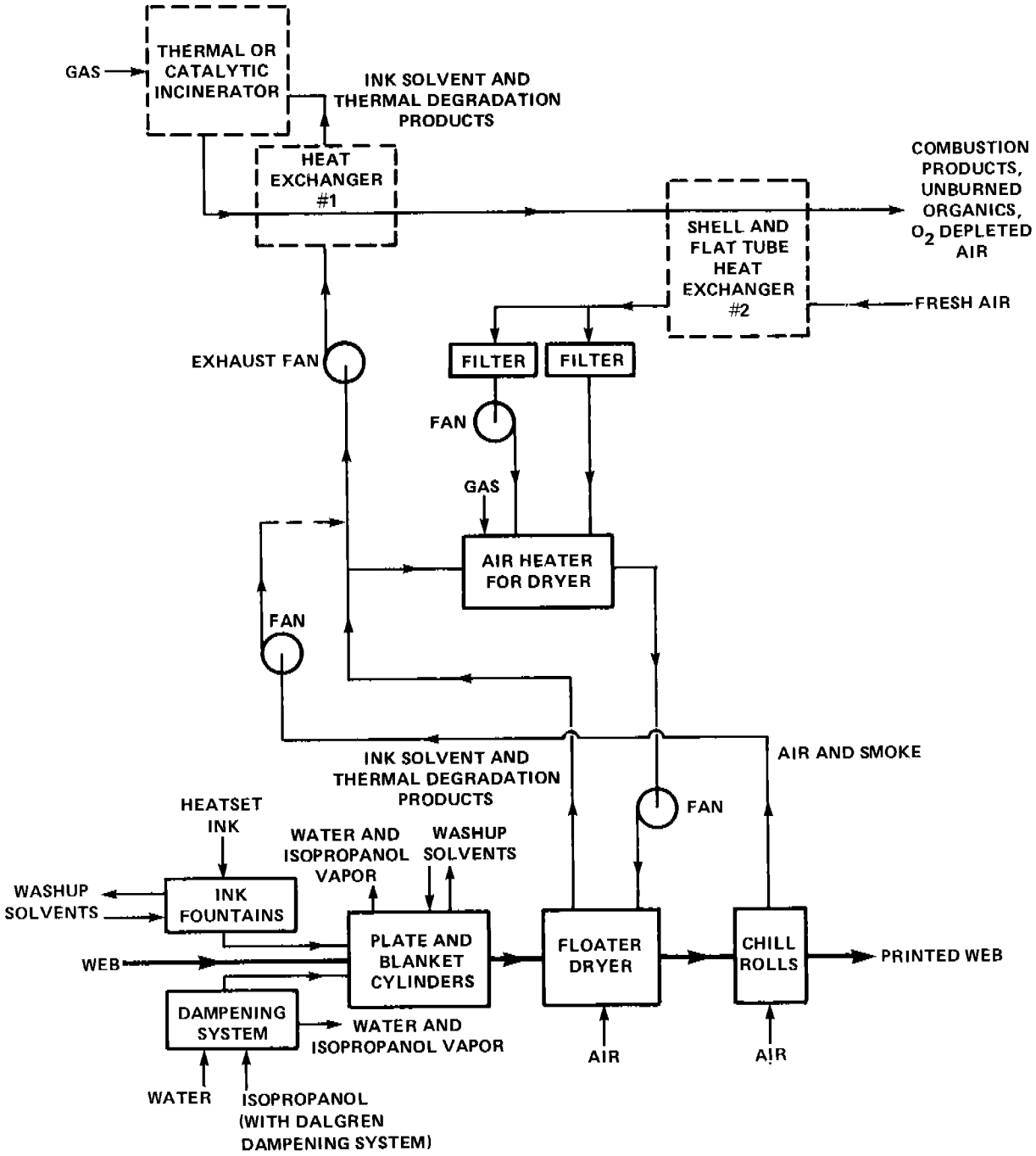

Figure 4.9-1. Web offset lithography publication printing line emission points.[11]

hydrocarbons. In a publication web offset process, the web is printed on both sides simultaneously and passed through a tunnel or floater dryer at about 200-290°C (400-500°F). The dryer may be hot air or direct flame. Approximately 40 percent of the incoming solvent remains in the ink film, and more may be thermally degraded in a direct flame dryer. The web passes over chill rolls before folding and cutting. In newspaper work no dryer is used, and most of the solvent is believed to remain in the ink film on the paper.[11]

Web Letterpress - Letterpress is the oldest form of moveable type printing, and it still dominates in periodical and newspaper publishing, although numerous major newspapers are converting to web offset. In letterpress printing, the image area is raised, and the ink is transferred to the paper directly from the image surface. The image carrier may be made of metal or plastic. Only web presses using solventborne inks are discussed here. Letterpress newspaper and sheet fed printing use oxidative drying inks, not a source of volatile organic emissions. Figure 4.9-2 shows one unit of a web publication letterpress line.

Publication letterpress printing uses a paper web that is printed on one side at a time and dried after each color is applied. The inks employed are heatset, usually of about 40 volume percent solvent. The solvent in high speed operations is generally a selected petroleum fraction akin to kerosene and fuel oil, with a boiling point of 200-370°C (400-700°F).[13]

Rotogravure - In gravure printing, the image area is engraved, or "intaglio" relative to the surface of the image carrier, which is a copper plated steel cylinder that is usually also chrome plated to enhance wear resistance. The gravure cylinder rotates in an ink trough or fountain. The ink is picked up in the engraved area, and ink is scraped off the nonimage area with a steel "doctor blade". The image is transferred directly to the web when it is pressed against the cylinder by a rubber covered impression roll, and the product is then dried. Rotary gravure (web fed) systems are known as "rotogravure" presses.

Rotogravure can produce illustrations with excellent color control, and it may be used on coated or uncoated paper, film, foil and almost every other type of substrate. Its use is concentrated in publications and advertising such as newspaper supplements, magazines and mail order catalogues; folding cartons and other flexible packaging materials; and specialty products such as wall and floor coverings, decorated household paper products and vinyl upholstery. Figure 4.9-3 illustrates one unit of a publication rotogravure press. Multiple units are required for printing multiple colors.

The inks used in rotogravure publication printing contain from 55 to 95 volume percent low boiling solvent (average is 75 volume percent), and they must have low viscosities. Typical gravure

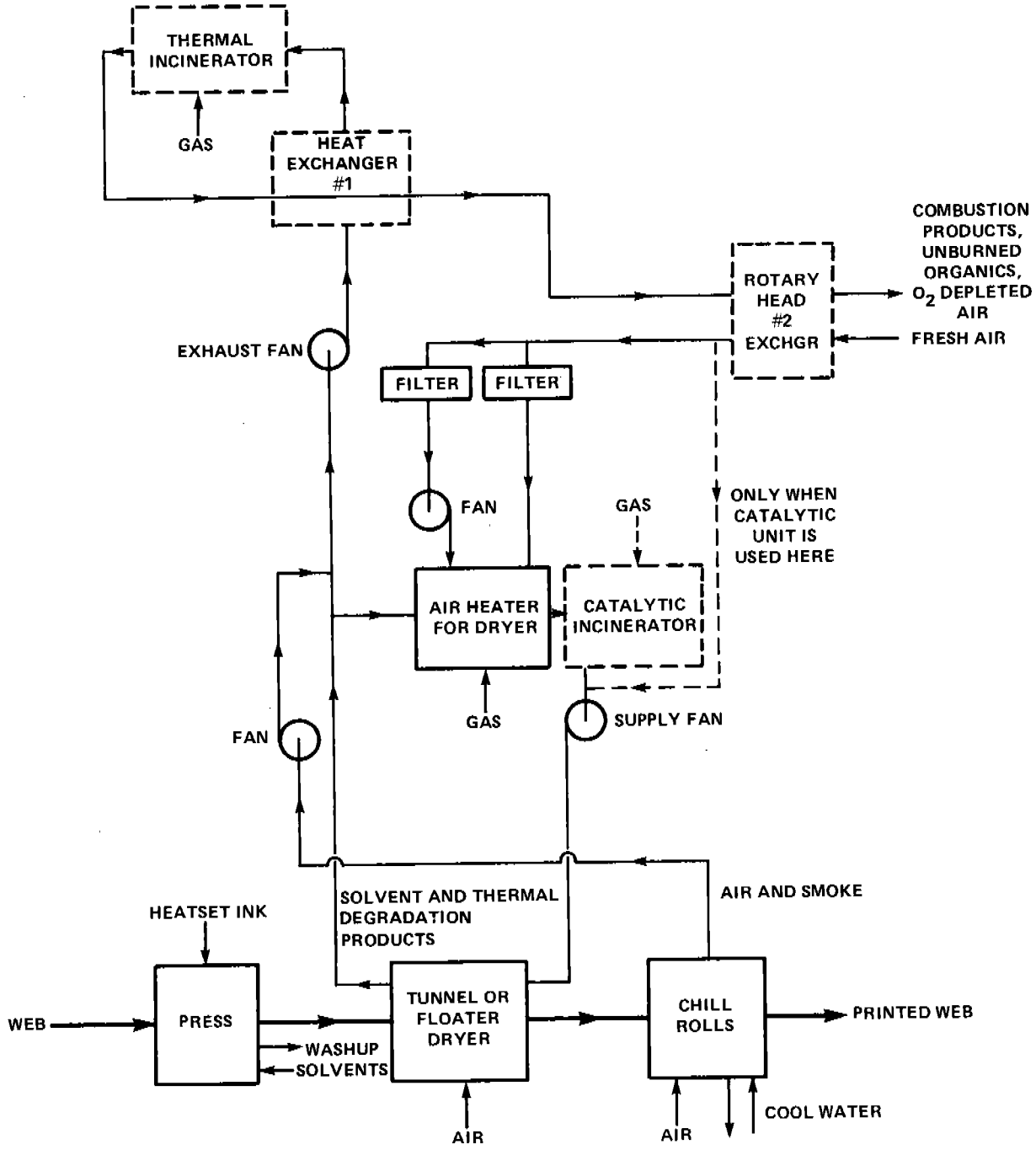

Figure 4.9-2. Web letterpress publication printing line emission points.[11]

solvents include alcohols, aliphatic naphthas, aromatic hydrocarbons, esters, glycol ethers, ketones and nitroparaffins. Water base inks are in regular production use in some packaging and specialty applications, such as sugar bags.

Rotogravure is similar to letterpress printing in that the web is printed on one side at a time and must be dried after application of each color. Thus, for four color, two sided publication printing, eight presses are employed, each including a pass over a steam drum or through a hot air dryer at temperatures from ambient up to 120°C (250°F) where nearly all of the solvent is removed.[3] For further information, see Section 4.9.2.

Flexography - In flexographic printing, as in letterpress, the image area is above the surface of the plate. The distinction is that flexography uses a rubber image carrier and alcohol base inks. The process is usually web fed and is employed for medium or long multicolor runs on a variety of substrates, including heavy paper, fiberboard and metal and plastic foil. The major categories of the flexography market are flexible packaging and laminates, multiwall bags, milk cartons, gift wrap, folding cartons, corrugated paperboard (which is sheet fed), paper cups and plates, labels, tapes and envelopes. Almost all milk cartons and multiwall bags and half of all flexible packaging are printed by this process.

Steam set inks, employed in the "water flexo" or "steam set flexo" process, are low viscosity inks of a paste consistency that are gelled by water or steam. Steam set inks are used for paper bag printing, and they produce no significant emissions. Water base inks, usually pigmented suspensions in water, are also available for some flexographic operations, such as the printing of multiwall bags.

Solvent base inks are used primarily in publication printing, as shown in Figure 4.9-3. As with rotogravure, flexography publication printing uses very fluid inks of about 75 volume percent organic solvent. The solvent, which must be rubber compatible, may be alcohol, or alcohol mixed with an aliphatic hydrocarbon or ester. Typical solvents also include glycols, ketones and ethers. The inks dry by solvent absorption into the web and by evaporation, usually in high velocity steam drum or hot air dryers, at temperatures below 120°C (250°F).[3,13] As in letterpress publishing, the web is printed on only one side at a time. The web passes over chill rolls after drying.

Emissions and Controls - Significant emissions from printing operations consist primarily of volatile organic solvents. Such emissions vary with printing process, ink formulation and coverage, press size and speed, and operating time. The type of paper (coated or uncoated) has little effect on the quantity of emissions, although low levels of organic emissions are derived from the paper stock

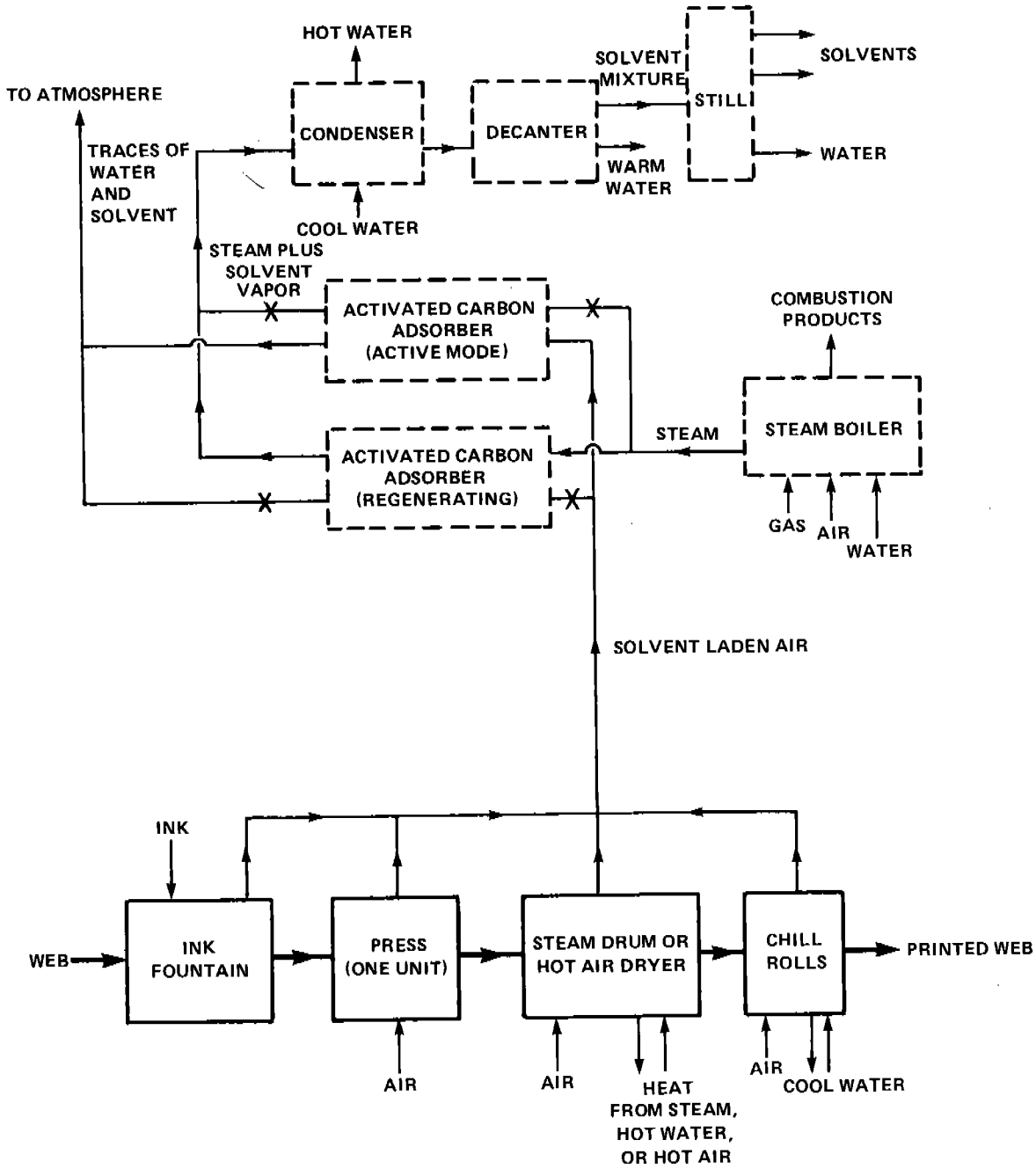

Figure 4.9-3. Rotogravure and flexography printing line emission points (chill rolls not used in rotogravure publication printing).[11]

during drying.[13] High volume web fed presses such as those discussed above are the principal sources of solvent vapors. Total annual emissions from the industry in 1977 were estimated to be 380,000 Mg (418,000 tons). Of this total, lithography emits 28 percent, letterpress 18 percent, gravure 41 percent and flexography 13 percent.[3]

Most of the solvent contained in the ink and used for dampening and cleanup eventually finds its way into the atmosphere, but some solvent remains with the printed product leaving the plant and is released to the atmosphere later. Overall solvent emissions can be computed from Equation 1 using a material balance concept, except in cases where a direct flame dryer is used and some of the solvent is thermally degraded.

The density of naphtha base solvent at 21°C (70°F) is 6.2 pounds per gallon.

$$E_{total} = T \qquad (1)$$

where

E_{total} = total solvent emissions including those from the printed product, kg (lb)

T = total solvent use including solvent contained in ink as used, kg (lb)

The solvent emissions from the dryer and other printline components can be computed from Equation 2. The remaining solvent leaves the plant with the printed product and/or is degraded in the dryer.

$$E = \frac{ISd}{100} \frac{(100 - P)}{100} \qquad (2)$$

where

E = solvent emissions from printline, kg (lb)

I = ink use, liters (gallons)

d = solvent density, kg/liter (lb/gallon)

S and P = factors from Table 4.9-1

Per Capita Emission Factors - Although major sources contribute most of the emissions for graphic arts operations, considerable emissions also originate from minor graphic arts applications, including inhouse printing services in general industries. Small sources within the graphic arts industry are numerous and difficult to identify, since many applications are associated with nonprinting

TABLE 4.9-1. TYPICAL PARAMETERS FOR COMPUTING SOLVENT EMISSIONS FROM PRINTING LINES[a,b]

Process	Solvent Content of Ink (Volume %) [S]	Solvent Remaining in Product and Destroyed in Dryer (%) [P][c]	Emission Factor Rating
Web Offset			
Publication	40	40 (hot air dryer) 60 (direct flame dryer)	B
Newspaper	5	100	B
Web Letterpress			
Publication	40	40	B
Newspaper	0	(not applicable)	
Rotogravure	75	2 - 7	C
Flexography	75	2 - 7	C

[a]References 1 and 14.
[b]Values for S and P are typical. Specific values for S and P should be obtained from a source to estimate its emissions.
[c]For certain packaging products, amount of solvent retained is regulated by FDA.

TABLE 4.9-2. PER CAPITA NONMETHANE VOC EMISSION FACTORS FOR SMALL GRAPHIC ARTS APPLICATIONS

EMISSION FACTOR RATING: D

Units	Emission Factor[a]
kg/year/capita	0.4
lb/year/capita	0.8
g/day/capita	1
lb/day/capita	0.003

[a]Reference 15. All nonmethane VOC.
[b]Assumes a 6 day operating week (313 days/yr).

industries. Table 4.9-2 presents per capita factors for estimating emissions from small graphic arts operations. The factors are entirely nonmethane VOC and should be used for emission estimates over broad geographical areas.

Web Offset Lithography - Emission points on web offset lithography publication printing lines include (1) the ink fountains, (2) the

dampening system, (3) the plate and blanket cylinders, (4) the dryer, (5) the chill rolls and (6) the product (see Figure 4.9-1).

Alcohol is emitted from Points 2 and 3. Washup solvents are a small source of emissions from Points 1 and 3. Drying (Point 4) is the major source, because 40 to 60 percent of the ink solvent is removed from the web during this process.

The quantity of web offset emissions may be estimated from Equation 1, or from Equation 2 and the appropriate data from Table 4.9-1.

Web Letterpress - Emission points on web letterpress publication printing lines are: the press (includes the image carrier and inking mechanism), the dryer, the chill rolls and the product (see Figure 4.9-2).

Web letterpress publication printing produces significant emissions, primarily from the ink solvent, about 60 percent of which is lost in the drying process. Washup solvents are a small source of emissions. The quantity of emissions can be computed as described for web offset.

Letterpress publication printing uses a variety of papers and inks that lead to emission control problems, but losses can be reduced by a thermal or catalytic incinerator, either of which may be coupled with a heat exchanger.

Rotogravure - Emissions from rotogravure printing occur at the ink fountain, the press, the dryer and the chill rolls (see Figure 4.9-3). The dryer is the major emission point, because most of the VOC in the low boiling ink is removed during drying. The quantity of emissions can be computed from Equation 1, or from Equation 2 and the appropriate parameters from Table 4.9-1.

Vapor capture systems are necessary to minimize fugitive solvent vapor loss around the ink fountain and at the chill rolls. Fume incinerators and carbon adsorbers are the only devices that have a high efficiency in controlling vapors from rotogravure operations.

Solvent recovery by carbon adsorption systems has been quite successful at a number of large publication rotogravure plants. These presses use a single water immiscible solvent (toluene) or a simple mixture that can be recovered in approximately the proportions used in the ink. All new publication gravure plants are being designed to include solvent recovery.

Some smaller rotogravure operations, such as those that print and coat packaging materials, use complex solvent mixtures in which many of the solvents are water soluble. Thermal incineration with heat recovery is usually the most feasible control for such operations.

TABLE 4.9-3. ESTIMATED CONTROL TECHNOLOGY EFFICIENCIES FOR PRINTING LINES

Method	Application	Reduction in Organic Emissions (%)
Carbon adsorption	Publication rotogravure operations	75[a]
Incineration[b]	Web offset lithography	95[c]
	Web letterpress	95[d]
	Packaging rotogravure printing operations	65[a]
	Flexography printing operations	60[a]
Waterborne inks[e]	Some packaging rotogravure printing operations[f]	65-75[a]
	Some flexography packaging printing operations	60[a]

[a]Reference 3. Overall emission reduction efficiency (capture efficiency multiplied by control device efficiency).
[b]Direct flame (thermal) catalytic and pebble bed. Three or more pebble beds in a system have a heat recovery efficiency of 85%.
[c]Reference 12. Efficiency of volatile organic removal - does not consider capture efficiency.
[d]Reference 13. Efficiency of volatile organic removal - does not consider capture efficiency.
[e]Solvent portion consists of 75 volume % water and 25 volume % organic solvent.
[f]With less demanding quality requirements.

With adequate primary and secondary heat recovery, the amount of fuel required to operate both the incinerator and the dryer system can be reduced to less than that normally required to operate the dryer alone.

In addition to thermal and catalytic incinerators, pebble bed incinerators are also available. Pebble bed incinerators combine the functions of a heat exchanger and a combustion device, and can achieve a heat recovery efficiency of 85 percent.

VOC emissions can also be reduced by using low solvent inks. Waterborne inks, in which the volatile portion contains up to 20 volume percent water soluble organic compounds, are used extensively in rotogravure printing of multiwall bags, corrugated paperboard and other packaging products, although water absorption into the paper limits the amount of waterborne ink that can be printed on thin stock before the web is seriously weakened.

Flexography - Emission points on flexographic printing lines are the ink fountain, the press, the dryer and the chill rolls (see Figure 4.9-3). The dryer is the major emission point, and emissions can be estimated from Equation 1, or from Equation 2 and the appropriate parameters from Table 4.9-1.

Vapor capture systems are necessary to minimize fugitive solvent vapor loss around the ink fountain and at the chill rolls. Fume incinerators are the only devices proven highly efficient in controlling vapors from flexographic operations. VOC emissions can also be reduced by using waterborne inks, which are used extensively in flexographic printing of packaging products.

Table 4.9-3 shows estimated control efficiencies for printing operations.

References for Section 4.9

1. "Air Pollution Control Technology Applicable to 26 Sources of Volatile Organic Compounds", Office of Air Quality Planning and Standards, U.S. Environmental Protection Agency, Research Triangle Park, NC, May 27, 1977. Unpublished.

2. Peter N. Formica, Controlled and Uncontrolled Emission Rates and Applicable Limitations for Eighty Processes, EPA-340/1-78-004, U.S. Environmental Protection Agency, Research Triangle Park, NC, April 1978.

3. Edwin J. Vincent and William M. Vatavuk, Control of Volatile Organic Emissions from Existing Stationary Sources, Volume VIII: Graphic Arts - Rotogravure and Flexography, EPA-450/2-78-033, U.S. Environmental Protection Agency, Research Triangle Park, NC, December 1978.

4. Telephone communication with C.M. Higby, Cal/Ink, Berkeley, CA, March 28, 1978.

5. T.W. Hughes, et al., Prioritization of Air Pollution from Industrial Surface Coating Operations, EPA-650/2-75-019a, U.S. Environmental Protection Agency, Research Triangle Park, NC, February 1975.

6. Harvey F. George, "Gravure Industry's Environmental Program", Environmental Aspects of Chemical Use in Printing Operations, EPA-560/1-75-005, U.S. Environmental Protection Agency, Research Triangle Park, NC, January 1976.

7. K.A. Bownes, "Material of Flexography", ibid.

8. Ben H. Carpenter and Garland R. Hilliard, "Overview of Printing Processes and Chemicals Used", ibid.

9. R.L. Harvin, "Recovery and Reuse of Organic Ink Solvents", ibid.

10. Joseph L. Zborovsky, "Current Status of Web Heatset Emission Control Technology", ibid.

11. R.R. Gadomski, et al., Evaluations of Emission and Control Technologies in the Graphic Arts Industries, Phase I: Final Report, APTD-0597, National Air Pollution Control Administration, Cincinnati, OH, August 1970.

12. R.R. Gadomski, et al., Evaluations of Emissions and Control Technologies in the Graphic Arts Industries, Phase II: Web Offset and Metal Decorating Processess, APTD-1463, U.S. Environmental Protection Agency, Research Triangle Park, NC, May 1973.

13. Control Techniques for Volatile Organic Emissions from Stationary Sources, EPA-450/2-78-022, U.S. Environmental Protection Agency, Research Triangle Park, NC, May 1978.

14. Telephone communication with Edwin J. Vincent, Office of Air Quality Planning and Standards, U.S. Environmental Protection Agency, Research Triangle Park, NC, July 1979.

15. W.H. Lamason, "Technical Discussion of Per Capita Emission Factors for Several Area Sources of Volatile Organic Compounds", Office of Air Quality Planning and Standards, U.S. Environmental Protection Agency, Research Triangle Park, NC, March 15, 1981. Unpublished.

4.9.2 PUBLICATION GRAVURE PRINTING

Process Description[1-2] - Publication gravure printing is the printing by the rotogravure process of a variety of paper products such as magazines, catalogs, newspaper supplements and preprinted inserts, and advertisements. Publication printing is the largest sector involved in gravure printing, representing over 37 percent of the total gravure product sales value in a 1976 study.

The rotogravure press is designed to operate as a continuous printing facility, and normal operation may be either continuous or nearly so. Normal press operation experiences numerous shutdowns caused by web breaks or mechanical problems. Each rotogravure press generally consists of eight to sixteen individual printing units, with an eight unit press the most common. In publication printing, only four colors of ink are used, yellow, red, blue and black. Each unit prints one ink color on one side of the web, and colors other than these four are produced by printing one color over another to yield the desired product.

In the rotogravure printing process, a web or substrate from a continuous roll is passed over the image surface of a revolving gravure cylinder. For publication printing, only paper webs are used. The printing images are formed by many tiny recesses or cells etched or engraved into the surface of the gravure cylinder. The cylinder is about one fourth submerged in a fountain of low viscosity mixed ink. Raw ink is solvent diluted at the press and is sometimes mixed with related coatings, usually referred to as extenders or varnishes. The ink, as applied, is a mixture of pigments, binders, varnish and solvent. The mixed ink is picked up by the cells on the revolving cylinder surface and is continuously applied to the paper web. After impression is made, the web travels through an enclosed heated air dryer to evaporate the volatile solvent. The web is then guided along a series of rollers to the next printing unit. Figure 4.9.2-1 illustrates this printing process by an end (or side) view of a single printing unit.

At present, only solventborne inks are used on a large scale for publication printing. Waterborne inks are still in research and development stages, but some are now being used in a few limited cases. Pigments, binders and varnishes are the nonvolatile solid components of the mixed ink. For publication printing, only aliphatic and aromatic organic liquids are used as solvents. Presently, two basic types of solvents, toluene and a toluene-xylene-naphtha mixture, are used. The naphtha base solvent is the more common. Benzene is present in both solvent types as an impurity, in concentrations up to about 0.3 volume percent. Raw inks, as purchased, have 40 to 60 volume percent solvent, and the related coatings typically contain about 60 to 80 volume percent solvent. The applied mixed ink consists of 75 to 80 volume percent solvent, required to achieve the proper fluidity for rotogravure printing.

Emissions and Controls[1,3-4] - Volatile organic compound (VOC) vapors are the only significant air pollutant emissions from publication rotogravure printing. Emissions from the printing presses depend on the total amount of solvent used. The sources of these VOC emissions are the solvent components in the raw inks, related coatings used at the printing presses, and solvent added for dilution and press cleaning. These solvent organics are photochemically reactive. VOC emissions from both controlled and uncontrolled publication rotogravure facilities in 1977 were about 57,000 megagrams (63,000 tons), 15 percent of the total from the graphic arts industry. Emissions from ink and solvent storage and transfer facilities are not considered here.

Table 4.9-1 presents emission factors for publication printing on rotogravure presses with and without control equipment. The potential amount of VOC emissions from the press is equal to the total amount of solvent consumed in the printing process (see Footnote f). For uncontrolled presses, emissions occur from the dryer exhaust vents, printing fugitive vapors, and evaporation of solvent retained in the printed product. About 75 to 90 percent of the VOC emissions occur from the dryer exhausts, depending on press operating speed, press shutdown frequency, ink and solvent composition, product printed, and dryer designs and efficiencies. The amount of solvent retained by the various rotogravure printed products is three to four percent of the total solvent in the ink used. The retained solvent eventually evaporates after the printed product leaves the press.

There are numerous points around the printing press from which fugitive emissions occur. Most of the fugitive vapors result from solvent evaporation in the ink fountain, exposed parts of the gravure cylinder, the paper path at the dryer inlet, and from the paper web after exiting the dryers between printing units. The quantity of fugitive vapors depends on the solvent volatility, the temperature of the ink and solvent in the ink fountain, the amount of exposed area around the press, dryer designs and efficiencies, and the frequency of press shutdowns.

The complete air pollution control system for a modern publication rotogravure printing facility consists of two sections, the solvent vapor capture system and the emission control device. The capture system collects VOC vapors emitted from the presses and directs them to a control device where they are either recovered or destroyed. Low-VOC waterborne ink systems to replace a significant amount of solventborne inks have not been developed as an emission reduction alternative.

Capture Systems - Presently, only the concentrated dryer exhausts are captured at most facilities. The dryer exhausts contain the majority of the VOC vapors emitted. The capture efficiency of dryers is limited by their operating temperatures and

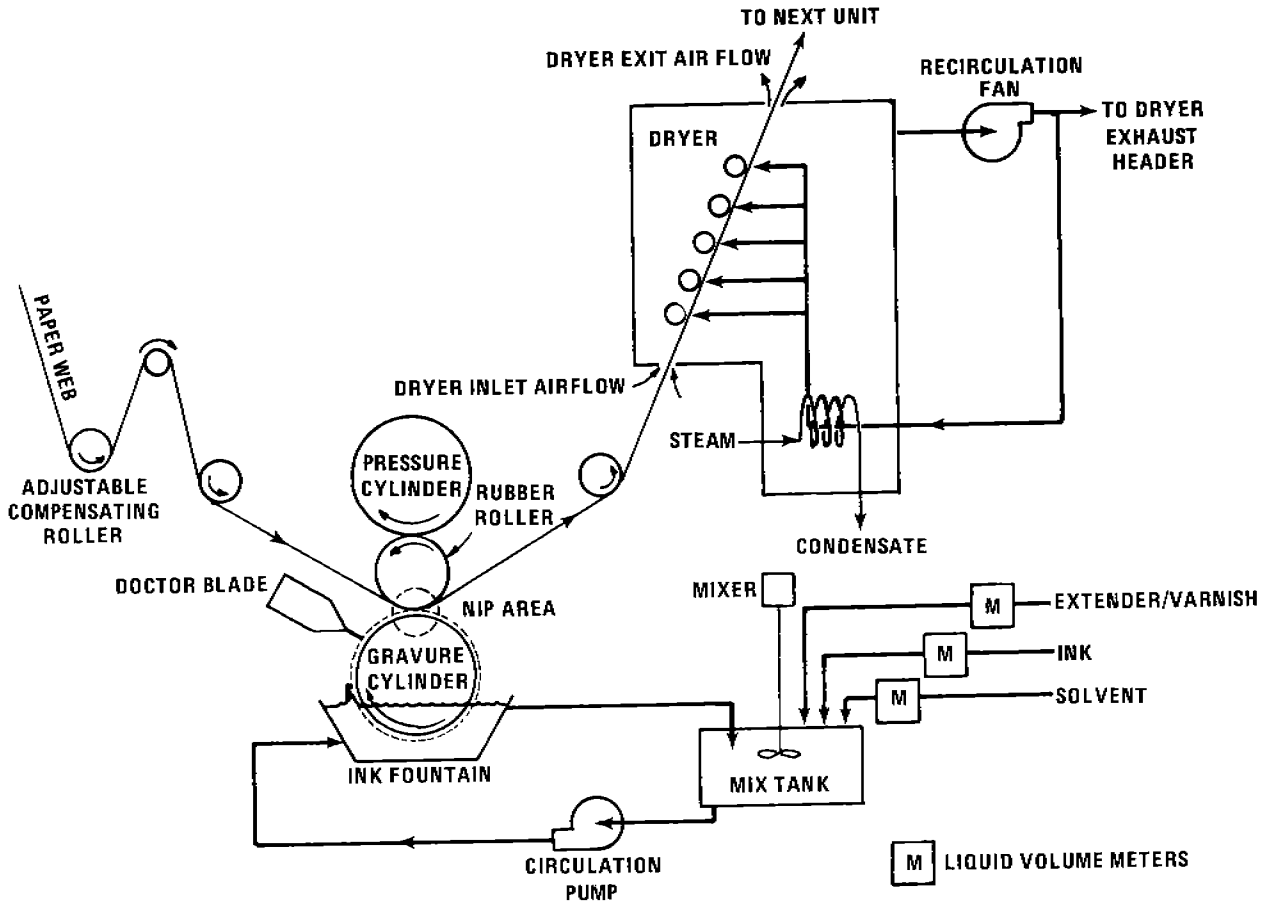

Figure 4.9.2-1. Diagram of a rotogravure printing unit.

TABLE 4.9.2-1. EMISSION FACTORS FOR PUBLICATION ROTOGRAVURE PRINTING PRESSES

EMISSION FACTOR RATING: C

	VOC Emissions[a]								
	Uncontrolled			75% Control			85% Control		
	Total solvent	Raw ink		Total solvent	Raw ink		Total solvent	Raw ink	
Emission Points	kg/kg (lb/lb)	kg/liter	lb/gal	kg/kg (lb/lb)	kg/liter	lb/gal	kg/kg (lb/lb)	kg/liter	lb/gal
Dryer exhausts[b]	0.84	1.24	10.42	-	-	-	-	-	-
Fugitives[c]	0.13	0.19	1.61	0.13	0.19	1.61	0.07	0.10	0.87
Printed product[d]	0.03	0.05	0.37	0.03	0.05	0.37	0.03	0.05	0.37
Control device[e]	-	-	-	0.09	0.13	1.12	0.05	0.07	0.62
Total emissions[f]	1.0	1.48	12.40	0.25	0.37	3.10	0.15	0.22	1.86

[a] All nonmethane. Mass of VOC emitted per mass of total solvent used are more accurate factors. Solvent assumed to consist entirely of VOC. Total solvent used includes all solvent in raw ink and related coatings, all dilution solvent added and all cleaning solvent used. Mass of VOC emitted per volume of raw ink (and coatings) used are general factors, based on typical dilution solvent volume addition. Actual factors based on ink use can vary significantly, as follows:

- Typical total solvent volume/raw ink (and coatings) volume ratio - 2.0 liter/liter (gal/gal); range, 1.6 - 2.4. See References 1, 5-8.
- Solvent density (D_s) varies with composition and temperature. At 21°C (70°F), the density of the most common mixed solvent used is 0.742 kg/liter (6.2 lb/gal); density of toluene solvent used is 0.863 kg/liter (7.2 lb/gal). See Reference 1.
- Mass of VOC emitted/raw ink (and coating) volume ratio determined from the mass emission factor ratio, the solvent/ink volume ratio, and the solvent density,

$$\text{kg/liter} = \text{kg/kg} \times \text{liter/liter} \times D_s$$
$$[\text{lb/gal} = \text{lb/lb} \times \text{gal/gal} \times D_s]$$

[b] Reference 3 and test data for presses with dryer exhaust control only (Reference 1). Dryer exhaust emissions depend on press operating speed, press shutdown frequency, ink and solvent composition, product printed, and dryer design and efficiencies. Emissions can range from 75-90% of total press emissions.

[c] Determined by difference between total emissions and other point emissions.

[d] Reference 1. Solvent temporarily retained in product after leaving press depends on dryer efficiency, type of paper and type of ink used. Emissions have been reported to range from 1-7% of total press emissions.

[e] Based on capture and control device efficiencies (see Note f). Emissions are residual content in captured solvent laden air vented after treatment.

[f] References 1 and 3. Uncontrolled presses eventually emit 100% of total solvent used. Controlled press emissions are based on overall reduction efficiency equal to capture efficiency x control device efficiency. For 75% control, the capture efficiency is 84% with a 90% efficient control device. For 85% control, the capture efficiency is 90% with a 95% control device.

other factors that affect the release of the solvent vapors from the print and web to the dryer air. Excessively high temperatures impair product quality. The capture efficiency of older design dryer exhaust systems is about 84 percent, and modern dryer systems can achieve 85 to 89 percent capture. For a typical press, this type capture system consists of ductwork from each printing unit's dryer exhaust joined in a large header. One or more large fans are employed to pull the solvent laden air from the dryers and to direct it to the control device.

A few facilities have increased capture efficiency by gathering fugitive solvent vapors along with the dryer exhausts. Fugitive vapors can be captured by a hood above the press, by a partial enclosure around the press, by a system of multiple spot pickup vents, by multiple floor sweep vents, by total pressroom ventilation capture, or by various combinations of these. The design of any fugitive vapor capture system needs to be versatile enough to allow safe and adequate access to the press in press shutdowns. The efficiencies of these combined dryer exhaust and fugitive capture systems can be as high as 93 to 97 percent at times, but the demonstrated achievable long term average when printing several types of products is only about 90 percent.

Control Devices - Various control devices and techniques may be employed to control captured VOC vapors from rotogravure presses. All such controls are of two categories, solvent recovery and solvent destruction.

Solvent recovery is the only present technique to control VOC emissions from publication presses. Fixed bed carbon adsorption by multiple vessels operating in parallel configuration, regenerated by steaming, represents the most used control device. A new adsorption technique using a fluidized bed of carbon might be employed in the future. The recovered solvent can be directly recycled to the presses.

There are three types of solvent destruction devices used to control VOC emissions, conventional thermal oxidation, catalytic oxidation and regenerative thermal combustion. These control devices are employed for other rotogravure printing. At present, none are being used on publication rotogravure presses.

The efficiency of both solvent destruction and solvent recovery control devices can be as high as 99 percent. However, the achievable long term average efficiency for publication printing is about 95 percent. Older carbon adsorber systems were designed to perform at about 90 percent efficiency. Control device emission factors presented in Table 4.9-1 represent the residual vapor content of the captured solvent laden air vented after treatment.

Overall Control - The overall emissions reduction efficiency for VOC control systems is equal to the capture efficiency times

the control device efficiency. Emission factors for two control levels are presented in Table 4.9.2-1. The 75 percent control level represents 84 percent capture with a 90 percent efficient control device. (This is the EPA control techniques guideline recommendation for State regulations on old existing presses.) The 85 percent control level represents 90 percent capture with a 95 percent efficient control device. This corresponds to application of best demonstrated control technology for new publication presses.

References for Section 4.9.2

1. Publication Rotogravure Printing - Background Information for Proposed Standards, EPA-450/3-80-031a, U.S. Environmental Protection Agency, Research Triangle Park, NC, October 1980.

2. Publication Rotogravure Printing - Background Information for Promulgated Standards, EPA-450/3-80-031b, U.S. Environmental Protection Agency, Research Triangle Park, NC. Expected November 1981.

3. Control of Volatile Organic Emissions from Existing Stationary Sources, Volume VIII: Graphic Arts - Rotogravure and Flexography, EPA-450/2-78-033, U.S. Environmental Protection Agency, Research Triangle Park, NC, December 1978.

4. Standards of Performance for New Stationary Sources: Graphic Arts - Publication Rotogravure Printing, 45 FR 71538, October 28, 1980.

5. Written communication from Texas Color Printers, Inc., Dallas, TX, to Radian Corp., Durham, NC, July 3, 1979.

6. Written communication from Meredith/Burda, Lynchburg, VA, to Edwin Vincent, Office of Air Quality Planning and Standards, U.S. Environmental Protection Agency, Research Triangle Park, NC, July 6, 1979.

7. W.R. Feairheller, Graphic Arts Emission Test Report, Meredith/Burda, Lynchburg, VA, EPA Contract No. 68-02-2818, Monsanto Research Corp., Dayton, OH, April 1979.

8. W.R. Feairheller, Graphic Arts Emission Test Report, Texas Color Printers, Dallas, TX, EPA Contract No. 68-02-2818, Monsanto Research Corp., Dayton, OH, October 1979.

4.10 COMMERCIAL/CONSUMER SOLVENT USE

4.10.1 General[1-2]

Commercial and consumer use of various products containing volatile organic compounds (VOC) contributes to formation of tropospheric ozone. The organics in these products may be released through immediate evaporation of an aerosol spray, evaporation after application, and direct release in the gaseous phase. Organics may act either as a carrier for the active product ingredients or as active ingredients themselves. Commercial and consumer products which release volatile organic compounds include aerosols, household products, toiletries, rubbing compounds, windshield washing fluids, polishes and waxes, nonindustrial adhesives, space deodorants, moth control applications, and laundry detergents and treatments.

4.10.2 Emissions

Major volatile organic constituents of these products which are released to the atmosphere include special naphthas, alcohols and various chloro- and fluorocarbons. Although methane is not included in these products, 31 percent of the volatile organic compounds released in the use of these products is considered nonreactive under EPA policy.[3,4]

National emissions and per capita emission factors for commercial and consumer solvent use are presented in Table 4.10-1. Per capita emission factors can be applied to area source inventories by multiplying the factors by inventory area population. Note that adjustment to exclude the nonreactive emissions fraction cited above should be applied to total emissions or to the composite factor. Care is advised in making adjustments, in that substitution of compounds within the commercial/consumer products market may alter the nonreactive fraction of compounds.

References for Section 4.10

1. W.H. Lamason, "Technical Discussion of Per Capita Emission Factors for Several Area Sources of Volatile Organic Compounds", Monitoring and Data Analysis Division, U.S. Environmental Protection Agency, Research Triangle Park, NC, March 15, 1981. Unpublished.

2. End Use of Solvents Containing Volatile Organic Compounds, EPA-450/3-79-032, U.S. Environmental Protection Agency, Research Triangle Park, NC, May 1979.

3. Final Emission Inventory Requirements for 1982 Ozone State Implementation Plans, EPA-450/4-80-016, U.S. Environmental Protection Agency, Research Triangle Park, NC, December 1980.

TABLE 4.10-1. EVAPORATIVE EMISSIONS FROM COMMERCIAL/CONSUMER SOLVENT USE

EMISSION FACTOR RATING: C

Nonmethane VOC[a]						
	National Emissions		Per Capita Emission Factors			
Use	10^3 Mg/yr	10^3 tons/yr	kg/yr	lb/yr	g/day[b]	10^{-3} lb/day
Aerosol products	342	376	1.6	3.5	4.4	9.6
Household products	183	201	0.86	1.9	2.4	5.2
Toiletries	132	145	0.64	1.4	1.8	3.8
Rubbing compounds	62	68	0.29	0.64	0.80	1.8
Windshield washing	61	67	0.29	0.63	0.77	1.7
Polishes and waxes	48	53	0.22	0.49	0.59	1.3
Nonindustrial	29	32	0.13	0.29	0.36	0.79
Space deodorant	18	20	0.09	0.19	0.24	0.52
Moth control	16	18	0.07	0.15	0.19	0.41
Laundry detergent	4	4	0.02	0.04	0.05	0.10
Total[c]	895	984	4.2	9.2	11.6	25.2

[a]References 1 and 2.
[b]Calculated by dividing kg/yr (lb/yr) by 365 and converting to appropriate units.
[c]Totals may not be additive because of rounding.

4. Procedures for the Preparation of Emission Inventories for Volatile Organic Compounds, Volume I, Second Edition, EPA-450/2-77-028, U.S. Environmental Protection Agency, Research Triangle Park, NC, September 1980.

4.11 TEXTILE FABRIC PRINTING

4.11.1 Process Description[1-2]

Textile fabric printing is part of the textile finishing industry. In fabric printing, a decorative pattern or design is applied to constructed fabric by roller, flat screen or rotary screen methods. Pollutants of interest in fabric printing are volatile organic compounds (VOC) from mineral spirit solvents in print pastes or inks. Tables 4.11-1 and 4.11-2 show typical printing run characteristics and VOC emission sources, respectively, for roller, flat screen and rotary screen printing methods.

In the roller printing process, print paste is applied to an engraved roller, and the fabric is guided between it and a central cylinder. The pressure of the roller and central cylinder forces the print paste into the fabric. Because of the high quality it can achieve, roller printing is the most appealing method for printing designer and fashion apparel fabrics.

In flat screen printing, a screen on which print paste has been applied is lowered onto a section of fabric. A squeegee then moves across the screen, forcing the print paste through the screen and into the fabric. Flat screen machines are used mostly in printing terry towels.

In rotary screen printing, tubular screens rotate at the same velocity as the fabric. Print paste distributed inside the tubular screen is forced into the fabric as it is pressed between the screen and a printing blanket (a continuous rubber belt). Rotary screen printing machines are used mostly but not exclusively for bottom weight apparel fabrics or fabric not for apparel use. Most knit fabric is printed by the rotary screen method, because it does not stress (pull or stretch) the fabric during the process.

Major print paste components include clear and color concentrates, a solvent, and in pigment printing, a low crock or binder resin. Print paste color concentrates contain either pigments or dyes. Pigments are insoluble particles physically bound to fabrics. Dyes are in solutions applied to impart color by becoming chemically or physically incorporated into individual fibers. Organic solvents are used almost exclusively with pigments. Very little organic solvent is used in nonpigment print pastes. Clear concentrates extend color concentrates to create light and dark shades. Clear and color concentrates do contain some VOC but contribute less than 1 percent of total VOC emissions from textile printing operations. Defoamers and resins are included in print paste to increase color fastness. A small amount of thickening

TABLE 4.11-1. TYPICAL TEXTILE FABRIC PRINTING RUN CHARACTERISTICS[a]

Characteristic	Roller		Rotary screen		Flat screen	
	Range	Average	Range	Average	Range	Average
Wet pickup rate, kg (lb)[b] print paste consumed/kg (lb) of fabric[c]	0.51 - 0.58	0.56	0.10 - 1.89	0.58	0.22 - 0.83	0.35
Fabric weight, kg/m^2 (lb/yd^2)[d]	0.116 - 0.116 (0.213 - 0.213)	0.116 (0.213)	0.116 - 0.116 (0.213 - 0.213)	0.116 (0.213)	0.314 - 0.314 (0.579 - 0.579)	0.314 (0.579)
Mineral spirits added to print paste, weight %	0 - 60	26	0 - 50	3	23 - 23	23
Print paste used per fabric area, kg/m^2 (lb/yd^2)[e]	0.059 - 0.067 (0.109 - 0.124)	0.065 (0.119)	0.012 - 0.219 (0.021 - 0.403)	0.067 (0.124)	0.069 - 0.261 (0.127 - 0.481)	0.110 (0.203)
Mineral spirits used per fabric area, kg/m^2 (lb/yd^2)[f]	0 - 0.040 (0 - 0.074)	0.017 (0.031)	0 - 0.109 (0 - 0.201)	0.0002 (0.0004)	0.016 - 0.060 (0.030 - 0.111)	0.025 (0.046)
Print paste used in run, kg (lb)[g]	673 - 764 (1,490 - 1,695)	741 (1,627)	137 - 2,497 (287 - 5,509)	764 (1,695)	787 - 2,975 (1,736 - 6,575)	1,254 (2,775)

[a]Length of run = 10,000 m (10,936 yd); fabric width = 1.14 m (1.25 yd); total fabric area = 11,400 m^2 (13,634 yd^2); line speed = 40 m/min (44 yd/min); distance, printer to oven = 5 m (5.5 yd).
[b]Wet pickup ratio is a method of yield calculation in which mass of print paste consumed is divided by mass of fabric used.
[c]Reference 3.
[d]Only average fabric weight is presented.
[e]Fabric weight multiplied by wet pickup rate.
[f]Fabric weight multiplied by wet pickup multiplied by percent mineral spirits in formulation.
[g]Print paste used per fabric area multiplied by area of fabric printed.

TABLE 4.11-2. SOURCES OF MINERAL SPIRIT EMISSIONS FROM A TYPICAL TEXTILE FABRIC PRINTING RUN[a]

Source	Percent of total emissions	Roller				Rotary screen				Flat screen			
		Range		Average		Range		Average		Range		Average	
		kg	lb	kg	lb	kg	lb	kg	lb	kg	lb	kg	lb
Mineral spirits used in run[b]	100.0	0 - 458	0 - 1,005	193	425	0 - 1,249	0 - 2,754	23	51	181 - 684	399 - 1,508	288	635
Wasted mineral spirits (potential water emissions)[c]	6.2	0 - 28	0 - 62	12	26	0 - 77	0 - 170	1	2	11 - 42	24 - 93	18	40
Overprinted mineral spirit fugitives[d]	3.5	0 - 16	0 - 35	7	15	0 - 44	0 - 97	1	2	6 - 24	13 - 53	10	22
Tray and barrel fugitives[e]	0.3	0 - 1	0 - 2	1	2	0 - 4	0 - 9	0	0	1 - 2	1 - 4	1	2
Flashoff fugitives[e]	1.5	0 - 7	0 - 15	3	6	0 - 19	0 - 41	0	1	3 - 10	6 - 22	4	9
Dryer emissions[e]	88.5	0 - 405	0 - 889	170	375	0 - 1,105	0 - 2,436	21	46	160 - 606	353 - 1,337	255	562

[a]Length of run = 10,000 m (10,936 yd); fabric width = 1.14 m (1.25 yd); total fabric area = 11,400 m^2 (13,634 yd^2); line speed = 40 m/min (44 yd/min); distance, printer to oven = 5 m (5.5 yd).
[b]Print paste used in run multiplied by mineral spirits added to print paste, weight percent.
[c]Estimate provided by industry contacts.
[d]Estimated on the basis of 2.5 cm (1 in.) of overprint on each side of fabric.
[e]Emission splits calculated from percentages provided by evaporation computations.

agent is also added to each print paste to control print paste viscosity. Print defoamers, resins and thickening agents do not contain VOC.

The majority of emissions from print paste are from the solvent, which may be aqueous, organic (mineral spirits) or both. The organic solvent concentration in print pastes may vary from 0 to 60 weight percent, with no consistent ratio of organic solvent to water. Mineral spirits used in print pastes vary widely in physical and chemical properties. See Table 4.11-3.

TABLE 4.11-3. TYPICAL INSPECTION VALUES FOR MINERAL SPIRITS[a]

Parameter	Range
Specific gravity at 15° C (60° F)	0.778 - 0.805
Viscosity at 25° C (77° F)	0.83 - 0.95 cP
Flash point (closed cup)	41 - 45° C (105 - 113° F)
Aniline point	43 - 62° C (110 - 144° F)
Kauri-Butanol number	32 - 45
Distillation range	
Initial boiling points	157 - 166° C (315 - 330° F)
50 percent value	168 - 178° C (334 - 348° F)
Final boiling points	199 - 201° C (390 - 394° F)
Composition (%)	
Total saturates	81.5 - 92.3
Total aromatics	7.7 - 18.5
C_8 and higher	7.5 - 18.5

[a]References 2,4.

Although some mineral spirits evaporate in the early stages of the printing process, the majority of emissions to the atmosphere is from the printed fabric drying process, which drives off volatile compounds (see Table 4.11-2 for typical VOC emission splits). For some specific print paste/fabric combinations, color fixing occurs in a curing process, which may be entirely separate or merely a separate segment of the drying process.

Two types of dryers are used for printed fabric - steam coil or natural gas fired dryers, through which the fabric is conveyed on belts, racks, etc., and steam cans, with which the fabric makes direct contact. Most screen printed fabrics and practically all printed knit fabrics and terry towels are dried with the first type of dryer, not to stress the fabric. Roller printed fabrics and

apparel fabrics requiring soft handling are dried on steam cans, which have lower installation and operating costs and which dry the fabric more quickly than other dryers.

Figure 4.11-1 is a schematic diagram of the rotary screen printing process, with emission points indicated. The flat screen printing process is virtually identical. The symbols for fugitive VOC emissions to the atmosphere indicate mineral spirits evaporating from print paste during application to fabric before drying. The largest VOC emission source is the drying and curing oven stack, which vents evaporated solvents (mineral spirits and water) to the atmosphere. The symbol for fugitive VOC emissions to the waste water indicates print paste mineral spirits washed with water from the printing blanket (continuous belt) and discharged in waste water.

Figure 4.11-2 is a schematic diagram of a roller printing process in which all emissions are fugitive. Fugitive VOC emissions from the "back grey" (fabric backing material that absorbs excess print paste) in the illustrated process are emissions to the atmosphere because the back grey is dried before being washed. In processes where the back grey is washed before drying, most of the fugitive VOC emissions from the back grey will be discharged into the waste water. In some roller printing processes, steam cans for drying printed fabric are enclosed, and drying process emissions are vented directly to the atmosphere.

4.11.2 Emissions and Controls [1,3-12]

Presently there is no addon emission control technology for organic solvent used in the textile fabric printing industry. Thermal incineration of oven exhaust has been evaluated in the Draft Background Information document for New Source Performance Standard development[1], and has been found unaffordable for some fabric printers. The feasibility of using other types of addon emission control equipment has not been fully evaluated. Significant organic solvent emissions reduction has been accomplished by reducing or eliminating the consumption of mineral spirit solvents. The use of aqueous or low organic solvent print pastes has increased during the past decade, because of the high price of organic solvents and higher energy costs associated with the use of higher solvent volumes. The only fabric printing applications presently requiring the use of large quantities of organic solvents are pigment printing of fashion or designer apparel fabric and terry towels.

Table 4.11-4 presents average emission factors and ranges for each type of printing process and an average annual emission factor per print line, based on estimates submitted by individual fabric printers. No emission tests were done. VOC emission rates involve three parameters, organic solvent content of print pastes, consumption of print paste

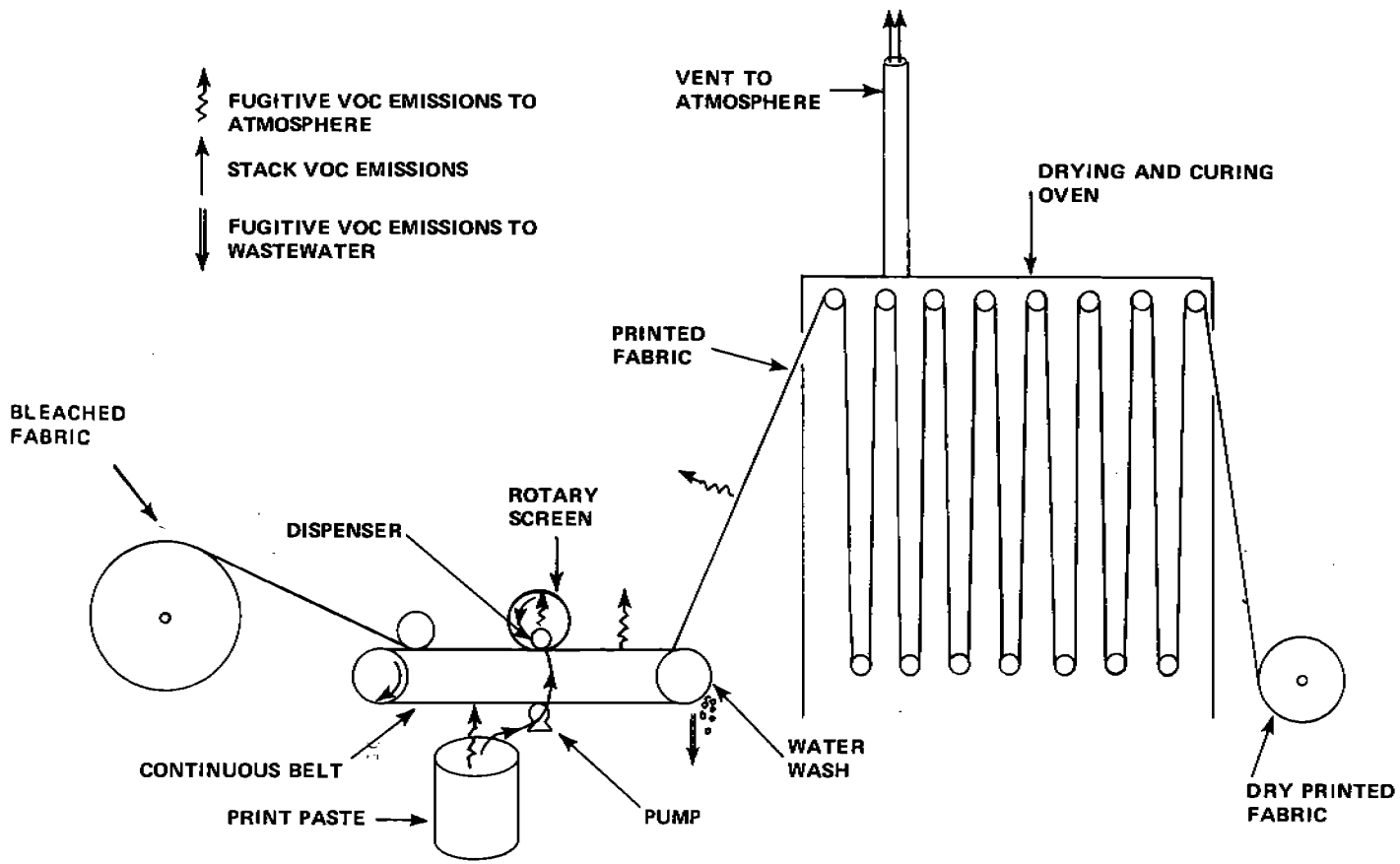

Figure 4.11-1. Schematic diagram of the rotary screen printing process, with fabric drying in a vented oven.

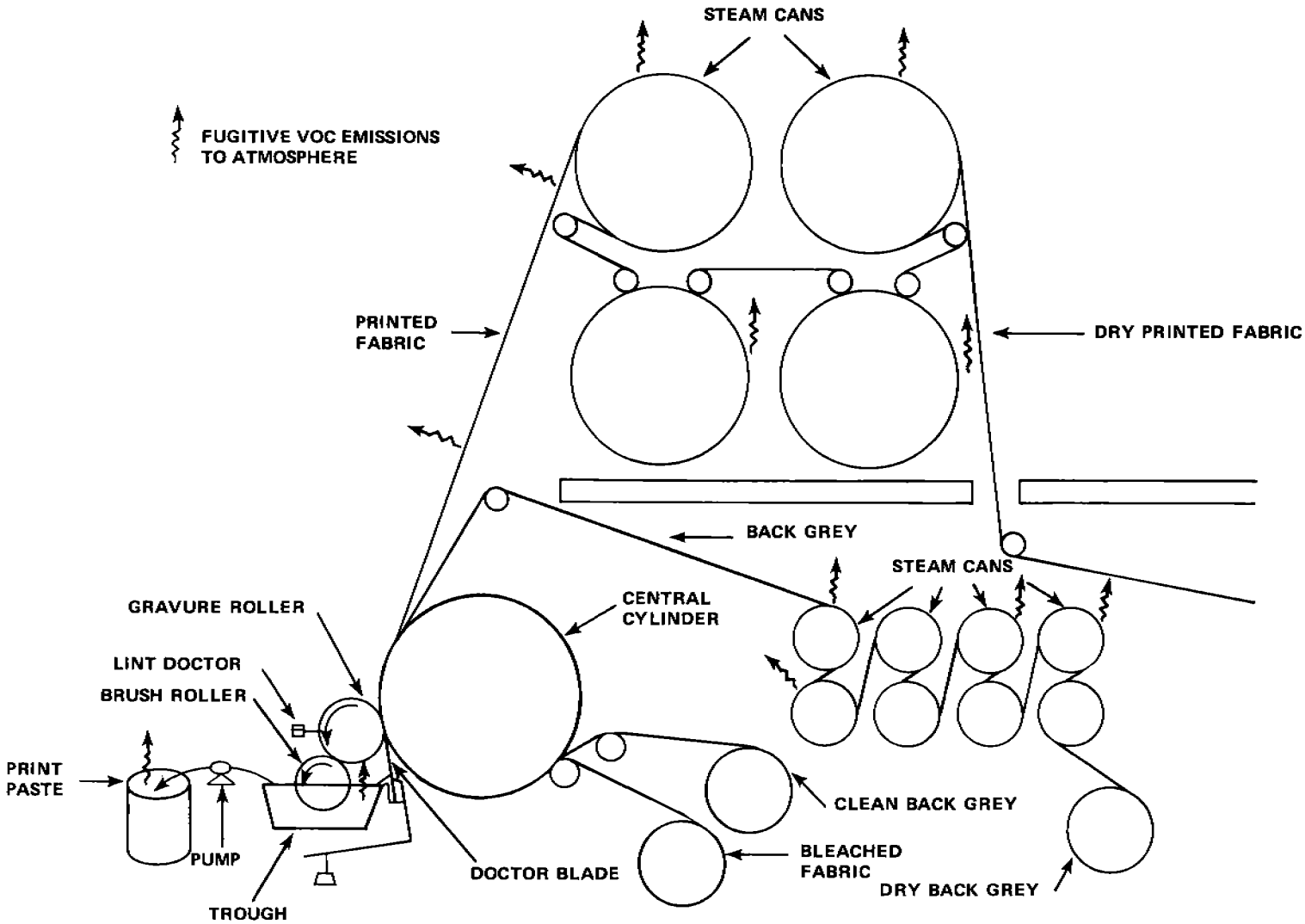

Figure 4.11-2. Schematic diagram of the roller printing process, with fabric drying on steam cans.

(a function of pattern coverage and fabric weight), and rate of fabric processing. With the quantity of fabric printed held constant, the lowest emission rate represents minimum organic solvent content print paste and minimum print paste consumption, and the maximum emission rate represents maximum organic solvent content print paste and maximum print paste consumption. The average emission rates shown for roller and rotary screen printing are based on the results of a VOC usage survey conducted by the American Textile Manufacturers Institute, Inc. (ATMI), in 1979. The average flat screen printing emission factor is based on information from two terry towel printers.

TABLE 4.11-4. TEXTILE FABRIC PRINTING ORGANIC EMISSION FACTORS[a]

EMISSION FACTOR RATING: C

VOC	Roller		Rotary screen		Flat screen[b]	
	Range	Average	Range	Average	Range	Average
kg(lb)/1,000 kg (lb) fabric	0 - 348[c]	142[d]	0 - 945[c]	23[d]	51 - 191[c]	79[e]
Mg(ton)/yr/print line[c]		130[c] (139)		29[c] (31)		29[c] (31)

[a]Transfer printing, carpet printing, and printing of vinyl coated cloth are specifically excluded from this compilation.
[b]Flat screen factors apply to terry towel printing. Rotary screen factors should be applied to flat screen printing of other types of fabric (e.g., sheeting, bottom weight apparel, etc.).
[c]Reference 13.
[d]Reference 5.
[e]Reference 6.

Although the average emission factors for roller and rotary screen printing are representative of the use of medium organic solvent content print pastes at average rates of print paste consumption, very little printing is actually done with medium organic solvent content pastes. The distribution of print paste use is bimodal, with the arithmetic average falling between the modes. Most fabric is printed with aqueous or low organic solvent print pastes. However, in applications where the use of organic solvents is beneficial, high organic solvent content print pastes

are used to derive the full benefit of using organic solvents. The most accurate emissions data can be generated by obtaining organic solvent use data for a particular facility. The emission factors presented here should only be used to estimate actual process emissions.

References for Section 4.11

1. Fabric Printing Industry: Background Information for Proposed Standards (Draft), EPA Contract No. 68-02-3056, Research Triangle Institute, Research Triangle Park, NC, April 21, 1981.

2. Exxon Petroleum Solvents, Lubetext DG-1P, Exxon Company, Houston, TX, 1979.

3. Memorandum from S. B. York, Research Triangle Institute, to Textile Fabric Printing AP-42 file, Office of Air Quality Planning and Standards, U.S. Environmental Protection Agency, Research Triangle Park, NC, March 25, 1981.

4. C. Marsden, Solvents Guide, Interscience Publishers, New York, NY, 1963, p. 548.

5. Letter from W. H. Steenland, American Textile Manufacturers Institute, Inc., to Dennis Crumpler, U.S. Environmental Protection Agency, Research Triangle Park, NC, April 8, 1980.

6. Memorandum from S. B. York, Research Triangle Institute, to textile fabric printing AP-42 file, Office of Air Quality Planning and Standards, U.S. Environmental Protection Agency, Research Triangle Park, NC, March 12, 1981.

7. Letter from A. C. Lohr, Burlington Industries, to James Berry, U.S. Environmental Protection Agency, Research Triangle Park, NC, April 26, 1979.

8. Trip Report/Plant Visit to Fieldcrest Mills, Foremost Screen Print Plant, memorandum from S. B. York, Research Triangle Institute, to G. Gasperecz, U.S. Environmental Protection Agency, Research Triangle Park, NC, January 28, 1980.

9. Letter from T. E. Boyce, Fieldcrest Corporation, to S. B. York, Research Triangle Institute, Research Triangle Park, NC, January 23, 1980.

10. Telephone conversation, S. B. York, Research Triangle Institute, with Tom Boyce, Foremost Screen Print Plant, Stokesdale, NC, April 24, 1980.

11. "Average Weight and Width of Broadwoven Fabrics (Gray)", Current Industrial Report, Publication No. MC-22T (Supplement), Bureau of the Census, U.S. Department of Commerce, Washington, DC, 1977.

12. "Sheets, Pillowcases, and Towels", Current Industrial Report, Publication No. MZ-23X, Bureau of the Census, U.S. Department of Commerce, Washington, DC, 1977.

13. Memorandum from S. B. York, Research Triangle Institute, to Textile Fabric Printing AP-42 file, Office of Air Quality Planning and Standards, U.S. Environmental Protection Agency, Research Triangle Park, NC, April 3, 1981.

14. "Survey of Plant Capacity, 1977", Current Industrial Report, Publication No. DQ-C1(77)-1, Bureau of the Census, U.S. Department of Commerce, Washington, DC, August 1978.

5.0 CHEMICAL PROCESS INDUSTRY

This Chapter deals with emissions from the manufacture and use of chemicals or chemical products. Potential emissions from many of these processes are high, but because of economic necessity, they are usually recovered. In some cases, the manufacturing operation is run as a closed system, allowing little or no emissions to escape to the atmosphere.

The emissions that reach the atmosphere from chemical processes are generally gaseous and are controlled by incineration, adsorption or absorption. Particulate emissions may also be a problem, since the particulates emitted are usually extremely small, requiring very efficient treatment for removal. Emissions data from chemical processes are sparse. It has been, therefore, frequently necessary to make estimates of emission factors on the basis of material balances, yields or similar processes.

5.1 ADIPIC ACID

5.1.1 General[1-2]

Adipic acid, $HOOC(CH_2)_4COOH$, is a white crystalline solid used in the manufacture of synthetic fibers, coatings, plastics, urethane foams, elastomers and synthetic lubricants. Ninety percent of all adipic acid produced in the United States is used in manufacturing Nylon 6,6. Cyclohexane is the basic raw material generally used to produce adipic acid, however, one plant uses cyclohexanone, a byproduct of another process. Phenol has also been used but has proven to be more expensive and less readily available than cyclohexane.

5.1.2 Process Description[1-4]

During adipic acid production, the raw material, cyclohexane or cyclohexanone, is transferred to a reactor, where it is oxidized at 130 to 170°C (260 - 330°F) to form a cyclohexanol/cyclohexanone mixture. The mixture is then transferred to a second reactor and is oxidized with nitric acid and a catalyst (usually a mixture of cupric nitrate and ammonium metavanadate) at 70 to 100°C (160 - 220°F) to form adipic acid. The chemistry of these reactions is shown below.

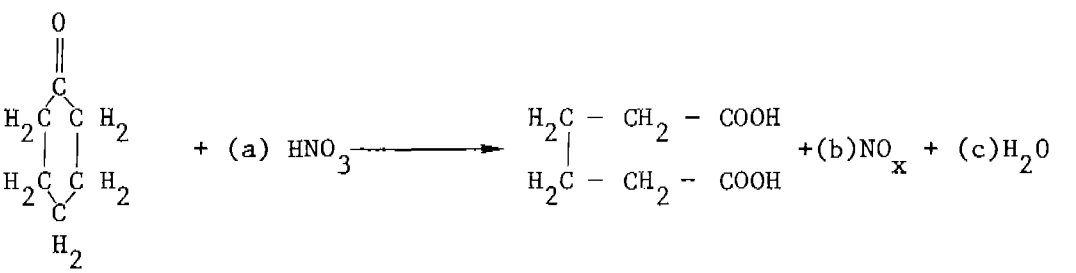

Cyclohexanone + Nitric acid ⟶ Adipic acid + Nitrogen oxides + Water

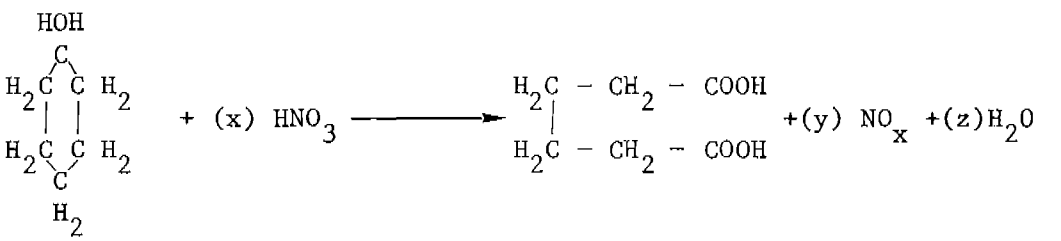

Cyclohexanol + Nitric acid ⟶ Adipic acid + Nitrogen oxides + Water

An alternate route for synthesizing adipic acid from cyclohexane (I. G. Farben process) involves two air oxidation steps: cyclohexane is oxidized to cyclohexanol and cyclohexanone; cyclohexanone and cyclohexanol are then oxidized to adipic acid, with a mixed manganese/barium acetate used as the catalyst.

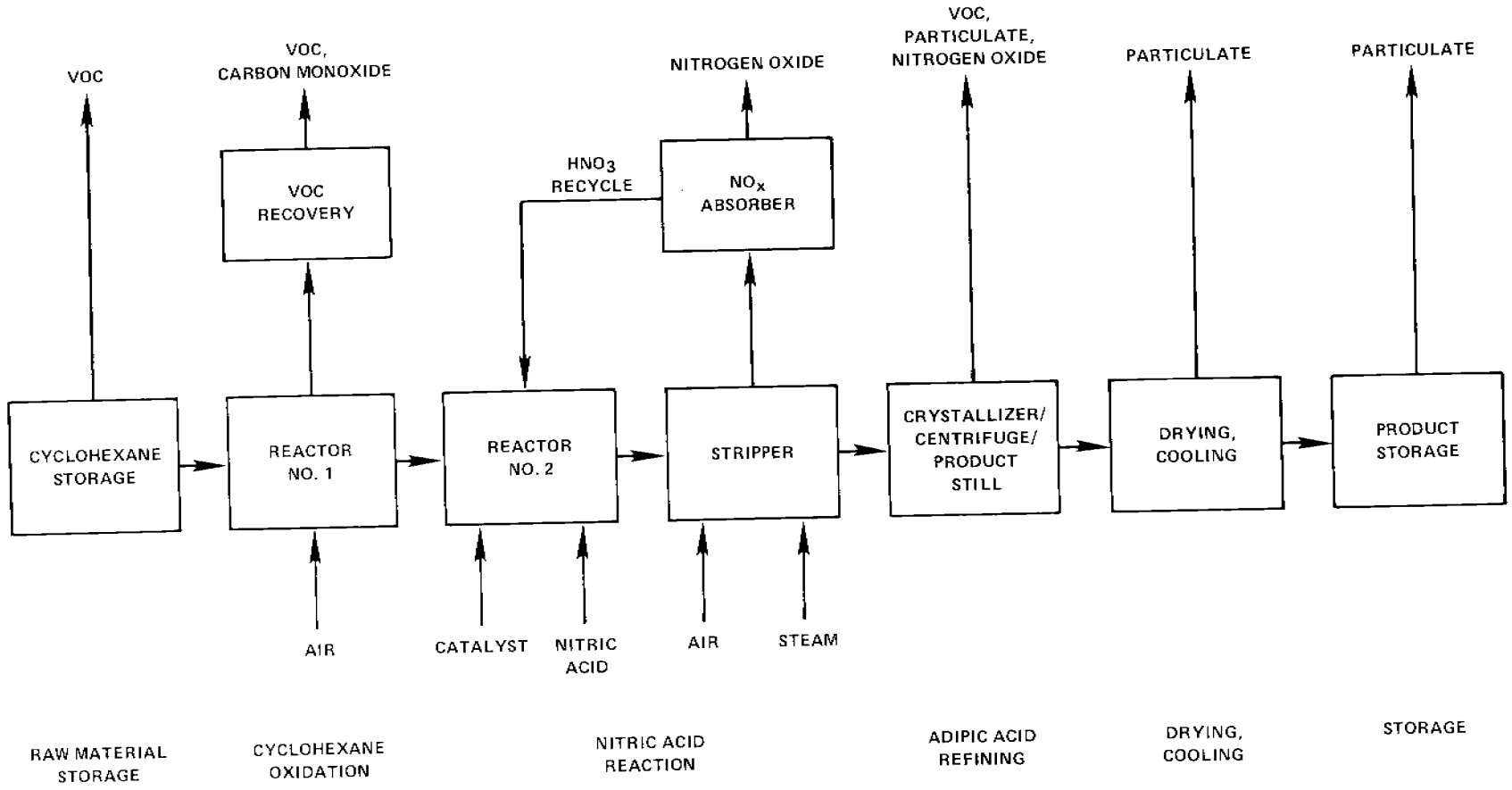

Figure 5.1-1. General Flow diagram of adipic acid manufacturing process.

Another possible synthesis method is a direct one stage air oxidation of cyclohexane to adipic acid with a cobaltous acetate catalyst.

The product from the second reactor enters a bleacher, in which the dissolved nitrogen oxides are stripped from the adipic acid/nitric acid solution with air and steam. Various organic acid byproducts, namely acetic acid, glutaric acid and succinic acid, are also formed and may be recovered and sold by some plants.

The adipic acid/nitric acid solution is chilled and sent to a vacuum crystallizer, where adipic acid crystals are formed, and the solution is then centrifuged to separate the crystals. The remaining solution is sent to another vacuum crystallizer, where any residual adipic acid is crystallized and centrifugally separated. Wet adipic acid from the last crystallization stage is dried and cooled and then is transferred to a storage bin. The remaining solution is distilled to recover nitric acid, which is routed back to the second reactor for reuse. Figure 5.1-1 presents a general scheme of the adipic acid manufacturing process.

5.1.3 Emissions and Controls[1,5]

Nitrogen oxides (NO_x), volatile organic compounds (VOC) and carbon monoxide (CO) are the major pollutants from adipic acid production. The cyclohexane reactor is the largest source of CO and VOC, and the nitric acid reactor is the dominant source of NO_x. Drying and cooling of the adipic acid product create particulate emissions, which are generally low because baghouses and/or wet scrubbers are employed for maximum product recovery and air pollution control. Process pumps and valves are potential sources of fugitive VOC emissions. Secondary emissions occur only from aqueous effluent discharged from the plant by pipeline to a holding pond. Aqueous effluent from the adipic acid manufacturing process contains dibasic organic acids, such as succinic and glutaric. Since these compounds are not volatile, air emissions are negligible compared to other emissions of VOC from the plant. Figure 5.1-1 shows the points of emission of all process pollutants.

The most significant emissions of VOC and CO come from the cyclohexane oxidation unit, which is equipped with high and low pressure scrubbers. Scrubbers have a 90 percent collection efficiency of VOC and are used for economic reasons, to recover expensive volatile organic compounds as well as for pollution control. Thermal incinerators, flaring and carbon adsorbers can all be used to limit VOC emissions from the cyclohexane oxidation unit with a greater than 90 percent efficiency. CO boilers control CO emissions with 99.99 percent efficiency and VOC emissions with practically 100 percent efficiency. The combined use of a CO boiler and a pressure scrubber results in nearly complete VOC and CO control.

Three methods are presently used to control emissions from the NO_x absorber: water scrubbing, thermal reduction, and flaring or combustion in a powerhouse boiler. Water scrubbers have a low collection efficiency, approximately 70 percent, because of the extensive time needed to remove insoluble NO in the absorber offgas stream. Thermal reduction, in which offgases containing NO_x are heated to high temperatures and are reacted with excess fuel in a reducing atmosphere, operates at up to 97.5 percent efficiency and is believed to be

the most effective system of control. Burning offgas in a powerhouse or flaring has an estimated efficiency of 70 percent.

TABLE 5.1-1. EMISSION FACTORS FOR ADIPIC ACID MANUFACTURE[a]

EMISSION FACTOR RATING: B

Process	Adipic acid particulate		Nitrogen oxides[b]		Nonmethane volatile organic compounds		Carbon monoxide	
	kg/Mg	lb/ton	kg/Mg	lb/ton	kg/Mg	lb/ton	kg/Mg	lb/ton
Raw material storage								
Uncontrolled	0	0	0	0	1.1	2.2	0	0
Cyclohexane oxidation								
Uncontrolled[c]	0	0	0	0	20	40	58	115
W/boiler	0	0	0	0	Neg	Neg	0.5	1
W/thermal incinerator[d]	0	0	0	0	Neg	Neg	Neg	Neg
W/flaring[e]	0	0	0	0	2	4	6	12
W/carbon absorber[f]	0	0	0	0	1	2	58	115
W/scrubber plus boiler	0	0	0	0	Neg	Neg	Neg	Neg
Nitric acid reaction								
Uncontrolled[g]	0	0	27	53	0	0	0	0
W/water scrubber[h]	0	0	8	16	0	0	0	0
W/thermal reduction[i]	0	0	0.5	1	0	0	0	0
W/flaring or combustion[h]	0	0	8	16	0	0	0	0
Adipic acid refining[j]								
Uncontrolled	0.1[k]	0.1[k]	0.3	0.6	0.3	0.5	0	0
Adipic acid drying, cooling and storage	0.4[k]	0.8[k]	0	0	0	0	0	0

[a]Reference 1. Factors are in lb of pollutant/ton and kg of pollutant/Mg of adipic acid produced.
[b]Neg = Negligible.
[b]NO_x is in the form of NO and NO_2. Although large quantities of N_2O are also produced, N_2O is not a criteria pollutant and is not, therefore, included here.
[c]Factors are after scrubber processing, since hydrocarbon recovery using scrubbers is an integral part of adipic acid manufacturing.
[d]A thermal incinerator is assumed to reduce VOC and CO emissions by approximately 99.99%.
[e]A flaring system is assumed to reduce VOC and CO emissions by 90%.
[f]A carbon adsorber is assumed to reduce VOC emissions by 94% and to be ineffective in reducing CO emissions.
[g]Uncontrolled emission factors are after NO_x absorber, since nitric acid recovery is an integral part of adipic acid manufacturing.
[h]Estimated 70% control.
[i]Estimated 97.5% control.
[j]Includes chilling, crystallization and centrifuging.
[k]Factors are after baghouse control device.

References for Section 5.1

1. Screening Study To Determine Need for Standards of Performance for New Adipic Acid Plants, EPA Contract No. 68-02-1316, GCA/Technology Division, Bedford, MA, July 1976.

2. Kirk-Othmer Encyclopedia of Chemical Technology, "Adipic Acid", Vol. 1, 2nd Ed, New York, Interscience Encyclopedia, Inc, 1967.

3. M. E. O'Leary, "CEH Marketing Research Report on Adipic Acid", Chemical Economics Handbook, Stanford Research Institute, Menlo Park, CA, January 1974.

4. K. Tanaka, "Adipic Acid by Single Stage", Hydrocarbon Processing, 55(11), November 1974.

5. H. S. Bosdekis, Adipic Acid in Organic Chemical Manufacturing, Volume 6, EPA-450/3-80-028a, U. S. Environmental Protection Agency, Research Triangle Park, NC, December 1980.

5.2 SYNTHETIC AMMONIA

5.2.1 General

Anhydrous ammonia is synthesized by reacting hydrogen with nitrogen at a molar ratio of 3:1, then compressing the gas and cooling it to -33°C. Nitrogen is obtained from the air, while hydrogen is obtained from either the catalytic steam reforming of natural gas (methane) or naphtha, or the electrolysis of brine at chlorine plants. In the United States, about 98 percent of synthetic ammonia is produced by catalytic steam reforming of natural gas (Figure 5.2-1).

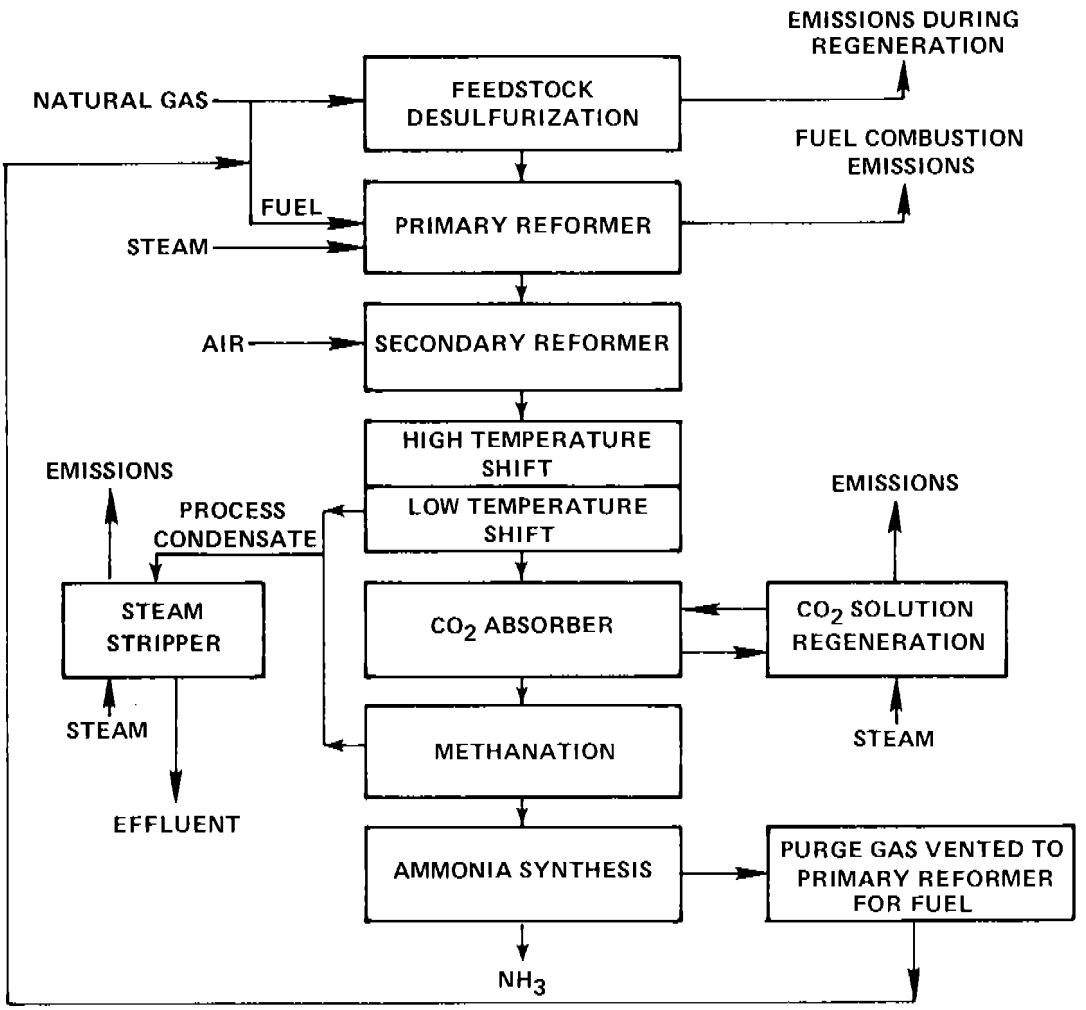

Figure 5.2-1. General process flow diagram of a typical ammonia plant.

Seven process steps are required to produce synthetic ammonia by the catalytic steam reforming method:

Natural gas desulfurization
Primary reforming with steam
Secondary reforming with air
Carbon monoxide shift
Carbon dioxide removal
Methanation
Ammonia synthesis

The first, fourth, fifth and sixth steps are to remove impurities such as sulfur, CO, CO_2 and water from the feedstock, hydrogen and synthesis gas streams. In the second step, hydrogen is manufactured, and in the third step, additional hydrogen is manufactured and nitrogen is introduced into the process. The seventh step produces anhydrous ammonia from the synthetic gas. While all ammonia plants use this basic process, details such as pressures, temperatures and quantities of feedstock will vary from plant to plant.

5.2.2 Emissions

Pollutants from the manufacture of synthetic anhydrous ammonia are emitted from four process steps:

Regeneration of the desulfurization bed
Heating of the primary reformer
Regeneration of carbon dioxide scrubbing solution
Steam stripping of process condensate

More than 95 percent of the ammonia plants in the U. S. use activated carbon fortified with metallic oxide additives for feedstock desulfurization. The desulfurization bed must be regenerated about once every 30 days for a 10-hour period. Vented regeneration steam contains sulfur oxides and/or hydrogen sulfide, depending on the amount of oxygen in the steam. Regeneration also emits volatile organic compounds (VOC) and carbon monoxide. The primary reformer, heated with natural gas or fuel oil, emits the combustion products NO_x, CO, SO_x, VOC and particulates.

Carbon dioxide is removed from the synthesis gas by scrubbing with monoethanolamine or hot potassium carbonate solution. Regeneration of this CO_2 scrubbing solution with steam produces emissions of VOC, NH_3, CO, CO_2 and monoethanolamine.

Cooling the synthesis gas after low temperature shift conversion forms a condensate containing quantities of NH_3, CO_2, methanol and trace metals. Condensate steam strippers are used to remove NH_3 and methanol from the water, and steam from this is vented to the atmosphere, emitting NH_3, CO_2 and methanol.

Table 5.2-1 presents emission factors for the typical ammonia plant. Control devices are not used at such plants, so the values in Table 5.2-1 represent uncontrolled emissions.

5.2.3 Controls

Add-on air pollution control devices are not used at synthetic ammonia plants, because their emissions are below state standards. Some processes have been modified to reduce emissions and to improve utility of raw materials and energy. Some plants are considering techniques to eliminate emissions from the condensate steam stripper, one such being the injection of the overheads into the reformer stack along with the combustion gases.

TABLE 5.2-1. UNCONTROLLED EMISSION FACTORS FOR TYPICAL AMMONIA PLANT[a]

EMISSION FACTOR RATING: A

Emission Point	Pollutant	kg/Mg	lb/ton
Desulfurization unit regeneration[b]	Total sulfur[c,d]	0.0096	0.019
	CO	6.9	13.8
	Nonmethane VOC[e]	3.6	7.2
Primary reformer, heater fuel combustion			
Natural gas	NO_x	2.7	5.4
	SO_x	0.0024	0.0048
	CO_x	0.068	0.136
	Particulates	0.072	0.144
	Methane	0.0063	0.0125
	Nonmethane VOC	0.0061	0.0122
Distillate oil	NO_x	2.7	5.4
	SO_x	1.3	2.6
	CO_x	0.12	0.24
	Particulates	0.45	0.90
	Methane	0.03	0.06
	Nonmethane VOC	0.19	0.38
Carbon dioxide regenerator	Ammonia	1.0	2.0
	CO	1.0	2.0
	CO_2	1220	2440
	Nonmethane VOC[f]	0.52	1.04
Condensate steam stripper	Ammonia	1.1	2.2
	CO_2	3.4	6.8
	Nonmethane VOC[g]	0.6	1.2

[a]Emission factors are expressed in weight of emissions per unit weight of ammonia produced.

[b]Intermittent source, average 10 hours once every 30 days.

[c]Worst case assumption, that all sulfur entering tank is emitted during regeneration.

[d]Normalized to a 24 hour emission factor.

[e]Reference 2.

[f]0.05 kg/MT (0.1 lb/ton) is monoethanolamine.

[g]Mostly methanol.

References for Section 5.2

1. G. D. Rawlings and R. B. Reznik, Source Assessment: Synthetic Ammonia Production, EPA-600/2-77-107m, U. S. Environmental Protection Agency, Research Triangle Park, NC, November 1977.

2. Source Category Survey: Ammonia Manufacturing Industry, EPA-450/3-80-014, U. S. Environmental Protection Agency, Research Triangle Park, NC, August 1980.

5.3 CARBON BLACK

5.3.1 Process Description

Carbon black is produced by the reaction of a hydrocarbon fuel such as oil or gas with a limited supply of combustion air at temperatures of 1320 to 1540°C (2400 to 2800°F). The unburned carbon is collected as an extremely fine black fluffy particle, 10 to 500 nm diameter. The principal uses of carbon black are as a reinforcing agent in rubber compounds (especially tires) and as a black pigment in printing inks, surface coatings, paper and plastics. Two major processes are presently used in the United States to manufacture carbon black, the oil furnace process and the thermal process. The oil furnace process accounts for about 90 percent of production, and the thermal about 10 percent. Two others, the lamp process for production of lamp black and the cracking of acetylene to produce acetylene black, are each used at one plant in the U. S. However, these are small volume specialty black operations which constitute less than 1 percent of total production in this country. The gas furnace process is being phased out, and the last channel black plant in the U. S. was closed in 1976.

5.3.1.1 Oil Furnace Process - In the oil furnace process (Figure 5.3-1 and Table 5.3-1), an aromatic liquid hydrocarbon feedstock is heated and injected continuously into the combustion zone of a natural gas fired furnace, where it is decomposed to form carbon black. Primary quench water cools the gases to 500°C (1000°F) to stop the cracking. The exhaust gases entraining the carbon particles are further cooled to about 230°C (450°F) by passage through heat exchangers and direct water sprays. The black is then separated from the gas stream, usually by a fabric filter. A cyclone for primary collection and particle agglomeration may precede the filter. A single collection system often serves several manifolded furnaces.

The recovered carbon black is finished to a marketable product by pulverizing and wet pelletizing to increase bulk density. Water from the wet pelletizer is driven off in a gas fired rotary dryer. Oil or process gas can be used. From 35 to 70 percent of the dryer combustion gas is charged directly to the interior of the dryer, and the remainder acts as an indirect heat source for the dryer. The dried pellets are then conveyed to bulk storage. Process yields range from 35 to 65 percent, depending on the feed composition and the grade of black produced. Furnace designs and operating conditions determine the particle size and the other physical and chemical properties of the black. Generally, yields are highest for large particle blacks and lowest for small particle blacks.

5.3.1.2 Thermal Process - The thermal process is a cyclic operation in which natural gas is thermally decomposed (cracked) into carbon particles, hydrogen and a mixture of other organics. Two furnaces are used in normal operation. The first cracks natural gas and makes carbon black and hydrogen. The effluent gas from the first reactor is cooled by water sprays to about 125°C (250°F), and the black is collected in a fabric filter. The filtered gas (90 percent hydrogen, 6 percent methane and 4 percent higher hydrocarbons)

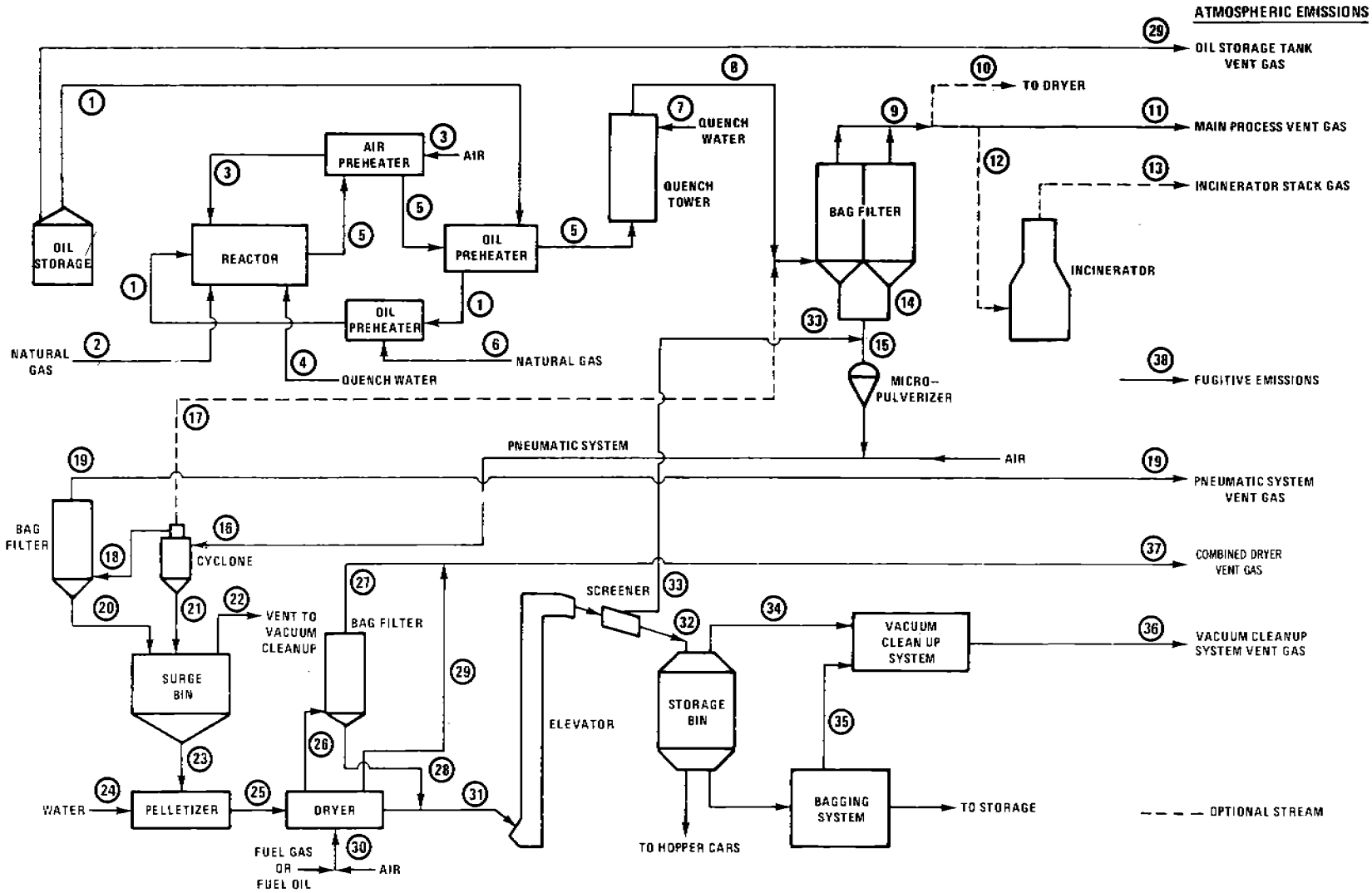

Figure 5.3-1. Flow diagram for the oil furnace carbon black process.

TABLE 5.3-1. STREAM IDENTIFICATION FOR THE OIL FURNACE PROCESS (Figure 5.3-1)

Stream	Identification
1	Oil feed
2	Natural gas feed
3	Air to reactor
4	Quench water
5	Reactor effluent
6	Gas to oil preheater
7	Water to quench tower
8	Quench tower effluent
9	Bag filter effluent
10	Vent gas purge for dryer fuel
11	Main process vent gas
12	Vent gas to incinerator
13	Incinerator stack gas
14	Recovered carbon black
15	Carbon black to micropulverizer
16	Pneumatic conveyor system
17	Cyclone vent gas recycle
18	Cyclone vent gas
19	Pneumatic system vent gas
20	Carbon black from bag filter
21	Carbon black from cyclone
22	Surge bin vent
23	Carbon black to pelletizer
24	Water to pelletizer
25	Pelletizer effluent
26	Dryer direct heat source vent
27	Dryer heat exhaust after bag filter
28	Carbon black from dryer bag filter
29	Dryer indirect heat source vent
30	Hot gases to dryer
31	Dried carbon black
32	Screened carbon black
33	Carbon black recycle
34	Storage bin vent gas
35	Bagging system vent gas
36	Vacuum cleanup system vent gas
37	Combined dryer vent gas
38	Fugitive emissions
39	Oil storage tank vent gas

is used as a fuel to heat a second reactor. When the first reactor becomes too cool to crack the natural gas feed, the positions of the reactors are reversed, and the second reactor is used to crack the gas while the first is heated. Normally, more than enough hydrogen is produced to make the thermal black process self-sustaining, and the surplus hydrogen is used to fire boilers that supply process steam and electric power.

The collected thermal black is pulverized and pelletized to a final product in much the same manner as is furnace black. Thermal process yields are generally high (35 to 60 percent), but the relatively coarse particles produced, 180 to 470 nm, do not have the strong reinforcing properties required for rubber products.

5.3.2 Emissions and Controls

5.3.2.1 Oil Furnace Process - Emissions from carbon black manufacture include particulate matter, carbon monoxide, organics, nitrogen oxides, sulfur compounds, polycyclic organic matter (POM) and trace elements.

The principal source of emissions in the oil furnace process is the main process vent. The vent stream consists of the reactor effluent and the quench water vapor vented from the carbon black recovery system. Gaseous emissions may vary considerably, according to the grade of carbon black being produced. Organic and CO emissions tend to be higher for small particle production, corresponding with the lower yields obtained. Sulfur compound emissions are a function of the feed sulfur content. Tables 5.3-2 and 5.3-3 show the normal emission ranges to be expected, with typical average values.

The combined dryer vent (stream 37 in Figure 5.3-1) emits carbon black from the dryer bag filter and contaminants from the use of the main process vent gas if the gas is used as a supplementary fuel for the dryer. It also emits contaminants from the combustion of impurities in the natural gas fuel for the dryer. These contaminants include sulfur oxides, nitrogen oxides, and the unburned portion of each of the species present in the main process vent gas (see Table 5.3-2). The oil feedstock storage tanks are a source of organic emissions. Carbon black emissions also occur from the pneumatic transport system vent, the plantwide vacuum cleanup system vent, and from cleaning, spills and leaks (fugitive emissions).

Gaseous emissions from the main process vent may be controlled with CO boilers, incinerators or flares. The pellet dryer combustion furnace, which is, in essence, a thermal incinerator, may also be employed in a control system. CO boilers, thermal incinerators or combinations of these devices can achieve essentially complete oxidation of organics and can oxidize sulfur compounds in the process flue gas. Combustion efficiencies of 99.6 percent for hydrogen sulfide and 99.8 percent for carbon monoxide have been measured for a flare on a carbon black plant. Particulate emissions may also be reduced by combustion of some of the carbon black particles, but emissions of sulfur dioxide and nitrogen oxides are thereby increased.

5.3.2.2 Thermal Process - Emissions from the furnaces in this process are very low because the offgas is recycled and burned in the next furnace to provide heat for cracking, or sent to a boiler as fuel. The carbon black is recovered in a bag filter between the two furnaces.

The rest is recycled in the offgas. Some adheres to the surface of the checkerbrick where it is burned off in each firing cycle.

Emissions from the dryer vent, the pneumatic transport system vent, the vacuum cleanup system vent, and fugitive sources are similar to those for the oil furnace process, since the operations which give rise to these emissions in the two processes are similar. There is no emission point in the thermal process which corresponds to the oil storage tank vents in the oil furnace process. Also in the thermal process, sulfur compounds, POM, trace elements and organic compound emissions are negligible, because low sulfur natural gas is used, and the process offgas is burned as fuel.

TABLE 5.3-2. EMISSION FACTORS FOR CHEMICAL SUBSTANCES FROM OIL FURNACE CARBON BLACK MANUFACTURE[a]

Chemical substance	Main process vent gas[b]	
	kg/Mg	lb/ton
Carbon disulfide	30	60
Carbonyl sulfide	10	20
Methane	25 (10-60)	50 (20-120)
Nonmethane VOC		
Acetylene	45 (5-130)	90 (10-260)
Ethane	0[c]	0[c]
Ethylene	1.6	3.2
Propylene	0[c]	0[c]
Propane	0.23	0.46
Isobutane	0.10	0.20
n-Butane	0.27	0.54
n-Pentane	0[c]	0[c]
POM	0.002	0.004
Trace elements[d]	<0.25	<0.50

[a]Expressed in terms of weight of emissions per unit weight of carbon black produced.
[b]These chemical substances are emitted only from the main process vent. Average values are based on six sampling runs made at a representative plant (Reference 1). Ranges given in parentheses are based on results of a survey of operating plants (Reference 4).
[c]Below detection limit of 1 ppm.
[d]Beryllium, lead, mercury, among several others.

TABLE 5.3-3. EMISSION FACTORS

EMISSION FACTOR

Process	Particulate[b]		Carbon Monoxide		Nitrogen Oxides	
	kg/Mg	lb/ton	kg/Mg	lb/ton	kg/Mg	lb/ton
Oil furnace process						
Main process vent	3.27[d] (0.1-5)	6.53[d] (0.2-10)	1,400[e] (700-2,200)	2,800[e] (1,400-4,400)	0.28[e] (1-2.8)	0.56[e] (2-5.6)
Flare	1.35 (1.2-1.5)	2.70 (2.4-3)	122 (108-137)	245 (216-274)	NA	NA
CO boiler and incinerator	1.04	2.07	0.88	1.75	4.65	9.3
Combined Dryer vent						
Bag filter[h]	0.12 (0.01-0.40)	0.24 (0.02-0.80)			0.36 (0.12-0.61)	0.73 (0.24-1.22)
Scrubber[h]	0.36 (0.01-0.70)	0.71 (0.02-1.40)			1.10	2.20
Pneumatic system vent[h]						
Bag filter	0.29 (0.06-0.70)	0.58 (0.12-1.40)				
Oil storage tank vent[i]						
Uncontrolled						
Vacuum cleanup system vent[h]						
Bag filter	0.03 (0.01-0.05)	0.06 (0.02-0.10)				
Fugitive emissions[h]	0.10	0.20				
Solid waste incinerator[j]	0.12	0.24	0.01	0.02	0.04	0.08
Thermal process[k]	Neg	Neg	Neg	Neg	Unknown[l]	Unknown[l]

[a]Expressed in terms of weight of emissions per unit weight of carbon black produced. Blanks indicate no emissions. Most plants use bag filters on all process trains for product recovery except solid waste incineration. Some plants may use scrubbers on at least one process train. NA = not available.

[b]The particulate matter is carbon black.

[c]Emission factors do not include organic sulfur compounds which are reported separately in Table 5.3-2. Individual organic species comprising the nonmethane VOC emissions are included in Table 5.3-.2

[d]Average values based on surveys of plants (References 4-5).

[e]Average values based on results of 6 sampling runs conducted at a representative plant with a mean production rate of 5.1 x 10 Mg/yr (5.6 x 10 ton/yr). Ranges of values are based on a survey of 15 plants (Reference 4). Controlled by bag filter.

[f]Not detected at detection limit of 1 ppm.

FOR CARBON BLACK MANUFACTURE[a]

RATING: C

Sulfur Oxides		Methane		Nonmethane VOC[c]		Hydrogen Sulfide	
kg/Mg	lb/ton	kg/Mg	lb/ton	kg/Mg	lb/ton	kg/Mg	lb/ton
0[e,f] (0-12)	0[e,f] (0-24)	25[e] (10-60)	50[e] (20-120)	50[e] (10-159)	100[e] (20-300)	30[e] 5S-13S[g]	60[e] 10S-26S[g]
25 (21.9-28)	50 (44-56)			1.85 (1.7-2)	3.7 (3.4-4)	1	2
17.5	35.2			0.99	1.98	0.11	0.22
0.26 (0.03-0.54)	0.52 (0.06-1.08)						
0.20	0.40						
				0.72	1.44		
0.01	0.02			0.01	0.02		
Neg	Neg			Neg	Neg	Neg	Neg

[g]S is the weight percent sulfur in the feed.

[h]Average values and corresponding ranges of values are based on a survey of plants (Reference 4) and on the public files of Louisiana Air Control Commission.

[i]Emission factor calculated using empirical correlations for petrochemical losses from storage tanks (vapor pressure = 0.7 kPa). Emissions are mostly aromatic oils.

[j]Based on emission rates obtained from the National Emissions Data System. All plants do not use solid waste incineration. See Section 2.1.

[k]Emissions from the furnaces are negligible. Emissions from the dryer vent, pneumatic system vent and vacuum cleanup system and fugitive sources are similar to those for the oil furnace process.

[l]Data are not available.

References for Section 5.3

1. R. W. Serth and T. W. Hughes, Source Assessment: Carbon Black Manufacture, EPA-600/2-77-107k, U. S. Environmental Protection Agency, Research Triangle Park, NC, October 1977.

2. Air Pollutant Emission Factors, APTD-0923, U. S. Environmental Protection Agency, Research Triangle Park, NC, April 1970.

3. I. Drogin, "Carbon Black", Journal of the Air Pollution Control Association, 18:216-228, April 1968.

4. Engineering and Cost Study of Air Pollution Control for the Petrochemical Industry, Vol. 1: Carbon Black Manufacture by the Furnace Process, EPA-450/3-73-006a, U. S. Environmental Protection Agency, Research Triangle Park, NC, June 1974.

5. K. C. Hustvedt and L. B. Evans, Standards Support and Emission Impact Statement: An Investigation of the Best Systems of Emission Reduction for Furnace Process Carbon Black Plants in the Carbon Black Industry (Draft), U. S. Environmental Protection Agency, Research Triangle Park, NC, April 1976.

6. Source Testing of a Waste Heat Boiler, EPA-75-CBK-3, U. S. Environmental Protection Agency, Research Triangle Park, NC, January 1975.

7. R. W. Gerstle and J. R. Richards, Industrial Process Profiles for Environmental Use, Chapter 4: Carbon Black Industry, EPA-600-2-77-023d, U. S. Environmental Protection Agency, Cincinnati, OH, February 1977.

8. G. D. Rawlings and T. W. Hughes, "Emission Inventory Data for Acrylonitrile, Phthalic Anhydride, Carbon Black, Synthetic Ammonia, and Ammonium Nitrate", Proceedings of APCA Specialty Conference on Emission Factors and Inventories, Anaheim, CA, November 13-16, 1978.

5.4 CHARCOAL

5.4.1 Process Description[1-3]

Charcoal is the solid carbon residue following the pyrolysis (carbonization or destructive distillation) of carbonaceous raw materials. Principal raw materials are medium to dense hardwoods such as beech, birch, hard maple, hickory and oak. Others are softwoods (primarily long leaf and slash pine), nutshells, fruit pits, coal, vegetable wastes and paper mill residues. Charcoal is used primarily as a fuel for outdoor cooking. In some instances, its manufacture may be considered as a solid waste disposal technique. Many raw materials for charcoal manufacture are wastes, as noted, and charcoal manufacture is also used in forest management for disposal of refuse.

Recovery of acetic acid and methanol byproducts was initially responsible for stimulation of the charcoal industry. As synthetic production of these chemicals became commercialized, recovery of acetic acid and methanol became uneconomical.

Charcoal manufacturing can be generally classified into either batch (45 percent) or continuous operations (55 percent). Batch units such as the Missouri type charcoal kiln (Figure 5.4-1) are small manually loaded and unloaded kilns producing typically 16 megagrams (17.6 tons) of charcoal during a three week cycle. Continuous units (i.e., multiple hearth furnaces) produce an average of 2.5 megagrams (2.75 tons) per hour of charcoal. During the manufacturing process, the wood is heated, driving off water and highly volatile organic compounds (VOC). Wood temperature rises to approximately 275°C (527°F), and VOC distillate yield increases. At this point, external application of heat is no longer required, since the carbonization reactions become exothermic. At 350°C (662°F), exothermic pyrolysis ends, and heat is again applied to remove the less volatile tarry materials from the product charcoal.

Fabrication of briquets from raw material may be either an integral part of a charcoal producing facility, or an independent operation, with charcoal being received as raw material. Charcoal is crushed, mixed with a binder solution, pressed and dried to produce a briquet of approximately 90 percent charcoal.

5.4.2 Emissions and Controls[3-9]

There are five types of charcoal products, charcoal; noncondensible gases (carbon monoxide, carbon dioxide, methane and ethane); pyroacids (primarily acetic acid and methanol); tars and heavy oils; and water. Products and product distribution are varied, depending on raw materials and carbonization parameters. The extent to which organics and carbon monoxide are naturally combusted before leaving the retort varies from plant to plant. If uncombusted, tars may solidify to form particulate emissions, and pyroacids may form aerosol emissions.

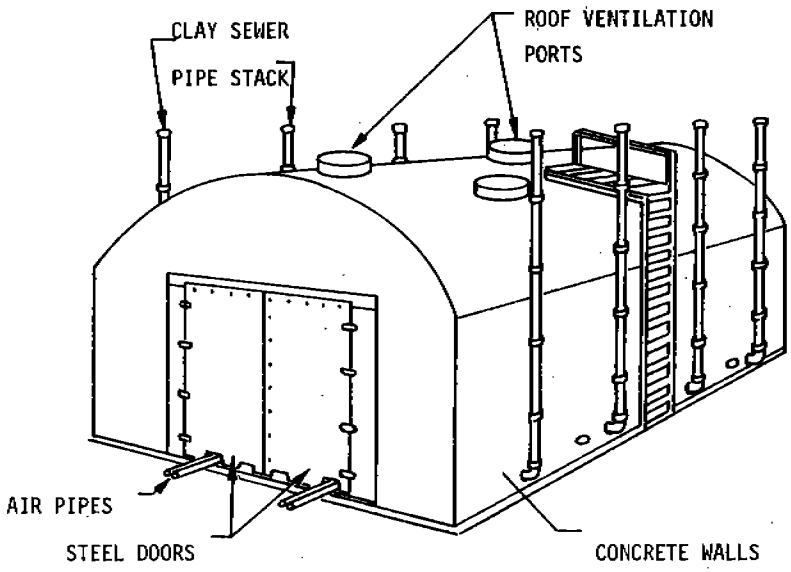

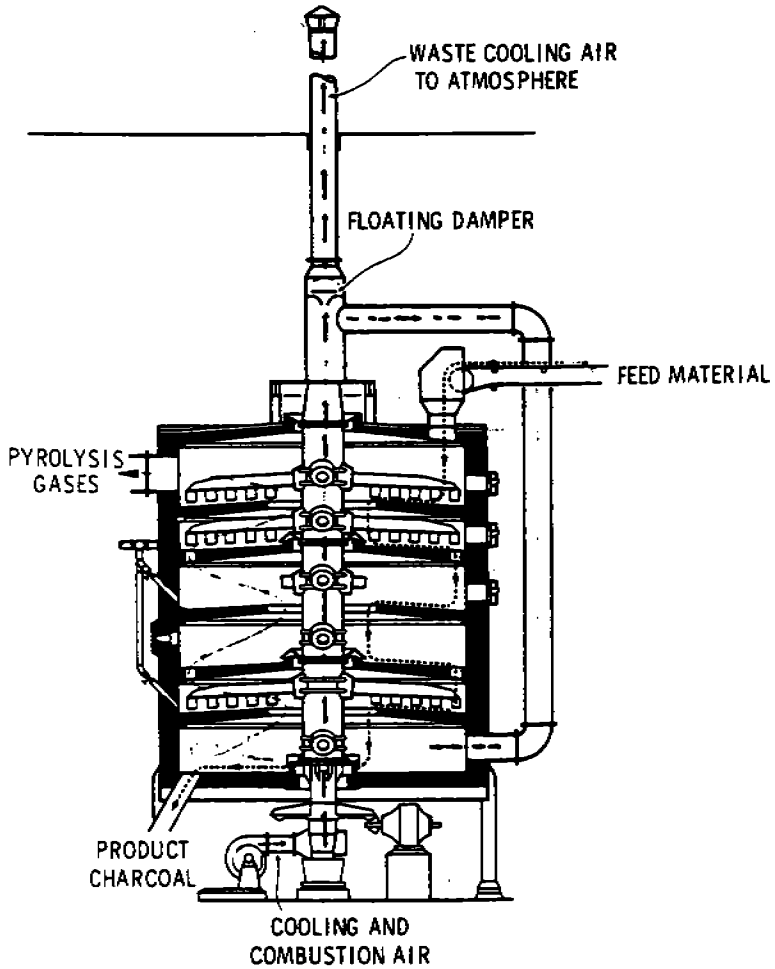

Figure 5.4-1. The Missouri type charcoal kiln (left) and the multiple hearth furnace (right).

Control of emissions from batch type charcoal kilns is difficult because of the cyclic nature of the process and, therefore, its emissions. Throughout a cycle, both the emission composition and flow rate change. Batch kilns do not typically have emission control devices, but some may use afterburners. Continuous production of charcoal is more amenable to emission control than are batch kilns, since emission composition and flow rate are relatively constant. Afterburning is estimated to reduce emissions of particulates, carbon monoxide and VOC by at least 80 percent.

Briquetting operations can control particulate emissions with centrifugal collection (65 percent control) or fabric filtration (99 percent control).

Uncontrolled emission factors for the manufacture of charcoal are shown in Table 5.4-1.

TABLE 5.4-1. UNCONTROLLED EMISSION FACTORS FOR CHARCOAL MANUFACTURING[a]

EMISSION FACTOR RATING: C

Pollutant	Charcoal Manufacturing		Briquetting	
	kg/Mg	lb/ton	kg/Mg	lb/ton
Particulate[b]	133	266	28	56
Carbon monoxide[c]	172	344	-	-
Nitrogen oxides[d]	12	24	-	-
VOC				
Methane[e]	52	104	-	-
Nonmethane[f]	157	314	-	-

[a]Expressed as weight per unit charcoal produced. Dash = not applicable. Reference 3. Afterburning is estimated to reduce emissions of particulates, carbon monoxide and VOC > 80%. Briquetting operations can control particulate emissions with centrifugal collection (65% control) or fabric filtration (99% control).
[b]Includes tars and heavy oils (References 1, 5-9). Polycyclic organic matter (POM) carried by suspended particulates was determined to average 4.0 mg/kg (Reference 6).
[c]References 1, 5, 9.
[d]Reference 3 (Based on 0.14% wood nitrogen content).
[e]References 1, 5, 7, 9.
[f]References 1, 3, 5, 7. Consists of both noncondensibles (ethane, formaldehyde, unsaturated hydrocarbons) and condensibles (methanol, acetic acid, pyroacids).

References for Section 5.4

1. Air Pollutant Emission Factors, APTD-0923, U. S. Environmental Protection Agency, Research Triangle Park, NC, April 1970.

2. R. N. Shreve, Chemical Process Industries, Third Edition, McGraw-Hill Book Company, New York, 1967.

3. C. M. Moscowitz, Source Assessment: Charcoal Manufacturing State of the Art, EPA-600/2-78-004z, U. S. Environmental Protection Agency, Cincinnati, OH, December 1978.

4. Riegel's Handbook of Industrial Chemistry, Seventh Edition, J. A. Kent, ed., Van Nostrand Reinhold Company, New York, 1974.

5. J. R. Hartwig, "Control of Emissions from Batch-type Charcoal Kilns", Forest Products Journal, 21(9):49-50, April 1971.

6. W. H. Maxwell, Stationary Source Testing of a Missouri-type Charcoal Kiln, EPA-907/9-76-001, U. S. Environmental Protection Agency, Kansas City, MO, August 1976.

7. R. W. Rolke, et al., Afterburner Systems Study, EPA-RZ-72-062, U. S. Environmental Protection Agency, Research Triangle Park, NC, August 1972.

8. B. F. Keeling, Emission Testing the Missouri-type Charcoal Kiln, Paper 76-37.1, Presented at the 69th Annual Meeting of the Air Pollution Control Association, Portland, OR, June 1976.

9. P. B. Hulman, et al., Screening Study on Feasibility of Standards of Performance for Wood Charcoal Manufacturing, EPA Contract No. 68-02-2608, Radian Corporation, Austin, TX, August 1978.

5.5 CHLOR–ALKALI

5.5.1 Process Description[1]

Chlorine and caustic are produced concurrently by the electrolysis of brine in either the diaphragm or mercury cell. In the diaphragm cell, hydrogen is liberated at the cathode and a diaphragm is used to prevent contact of the chlorine produced at the anode with either the alkali hydroxide formed or the hydrogen. In the mercury cell, liquid mercury is used as the cathode and forms an amalgam with the alkali metal. The amalgam is removed from the cell and is allowed to react with water in a separate chamber, called a denuder, to form the alkali hydroxide and hydrogen.

Chlorine gas leaving the cells is saturated with water vapor and then cooled to condense some of the water. The gas is further dried by direct contact with strong sulfuric acid. The dry chlorine gas is then compressed for in-plant use or is cooled further by refrigeration to liquefy the chlorine.

Caustic as produced in a diaphragm-cell plant leaves the cell as a dilute solution along with unreacted brine. The solution is evaporated to increase the concentration to a range of 50 to 73 percent; evaporation also precipitates most of the residual salt, which is then removed by filtration. In mercury-cell plants, high-purity caustic can be produced in any desired strength and needs no concentration.

5.5.2 Emissions and Controls[1]

Emissions from diaphragm- and mercury-cell chlorine plants include chlorine gas, carbon dioxide, carbon monoxide, and hydrogen. Gaseous chlorine is present in the blow gas from liquefaction, from vents in tank cars and tank containers during loading and unloading, and from storage tanks and process transfer tanks. Other emissions include mercury vapor from mercury cathode cells and chlorine from compressor seals, header seals, and the air blowing of depleted brine in mercury-cell plants.

Chlorine emissions from chlor-alkali plants may be controlled by one of three general methods: (1) use of the gas in other plant processes, (2) neutralization in alkaline scrubbers, and (3) recovery of chlorine from effluent gas streams. The effect of specific control practices is shown to some extent in the table on emission factors (Table 5.5-1).

References for Section 5.5

1. Atmospheric Emissions from Chlor-Alkali Manufacture. U.S. EPA, Air Pollution Control Office. Research Triangle Park, N.C. Publication Number AP-80. January 1971.

2. Duprey, R.L. Compilation of Air Pollutant Emission Factors. U.S. DHEW, PHS, National Center for Air Pollution Control. Durham, N.C. PHS Publication Number 999-AP-42. 1968. p. 49.

Table 5.5-1. EMISSION FACTORS FOR CHLOR-ALKALI PLANTS[a]
EMISSION FACTOR RATING: B

Type of source	Chlorine gas	
	lb/100 tons	kg/100 MT
Liquefaction blow gases		
Diaphragm cell	2,000 to 10,000	1,000 to 5,000
Mercury cell[b]	4,000 to 16,000	2,000 to 8,000
Water absorber[c]	25 to 1,000	12.5 to 500
Caustic or lime scrubber[c]	1	0.5
Loading of chlorine		
Tank car vents	450	225
Storage tank vents	1,200	600
Air blowing of mercury cell brine	500	250

[a]References 1 and 2.
[b]Mercury cells lose about 1.5 pounds mercury per 100 tons (0.75 kg/100 MT) of chlorine liquefied.
[c]Control devices.

5.6 EXPLOSIVES

5.6.1 General[1]

An explosive is a material that, under the influence of thermal or mechanical shock, decomposes rapidly and spontaneously with the evolution of large amounts of heat and gas. There are two major categories, high explosives and low explosives. High explosives are further divided into initiating, or primary, high explosives and secondary high explosives. Initiating high explosives are very sensitive and are generally used in small quantities in detonators and percussion caps to set off larger quantities of secondary high explosives. Secondary high explosives, chiefly nitrates, nitro compounds and nitramines, are much less sensitive to mechanical or thermal shock, but they explode with great violence when set off by an initiating explosive. The chief secondary high explosives manufactured for commercial and military use are ammonium nitrate blasting agents and 2,4,6,-trinitrotoluene (TNT). Low explosives, such as black powder and nitrocellulose, undergo relatively slow autocombustion when set off and evolve large volumes of gas in a definite and controllable manner. Many different types of explosives are manufactured. As examples of high and low explosives, the production of TNT and nitrocellulose (NC) are discussed below.

5.6.2 TNT Production[1-3,6]

TNT may be prepared by either a continuous or a batch process, using toluene, nitric acid and sulfuric acid as raw materials. The production of TNT follows the same chemical process, regardless of whether batch or continuous method is used. The flow chart for TNT production is shown in Figure 5.6-1. The overall chemical reaction may be expressed as:

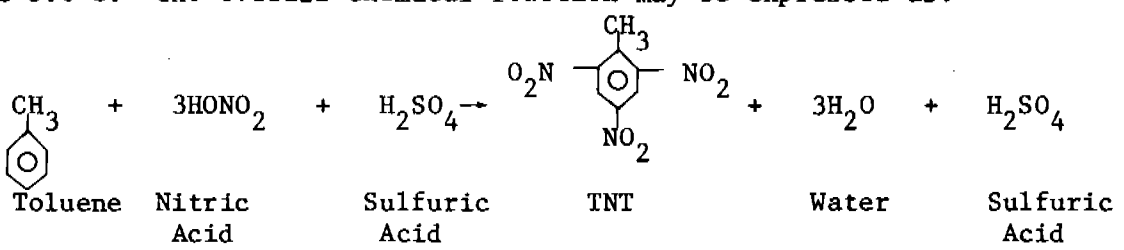

The production of TNT by nitration of toluene is a three stage process performed in a series of reactors, as shown in Figure 5.6-2. The mixed acid stream is shown to flow counter current to the flow of the organic stream. Toluene and spent acid fortified with a 60 percent HNO_3 solution are fed into the first reactor. The organic layer formed in the first reactor is pumped into the second reactor, where it is subjected to further nitration with acid from the third reactor fortified with additional HNO_3. The product from the second nitration step, a mixture of all possible isomers of dinitrotoluene (DNT), is pumped to the third reactor. In the final reaction, the DNT is treated with a fresh feed of nitric acid and oleum (a solution of SO_3[sulfur trioxide] in anhydrous sulfuric acid). The crude TNT from this third nitration consists primarily of 2,4,6-trinitrotoluene. The crude TNT is

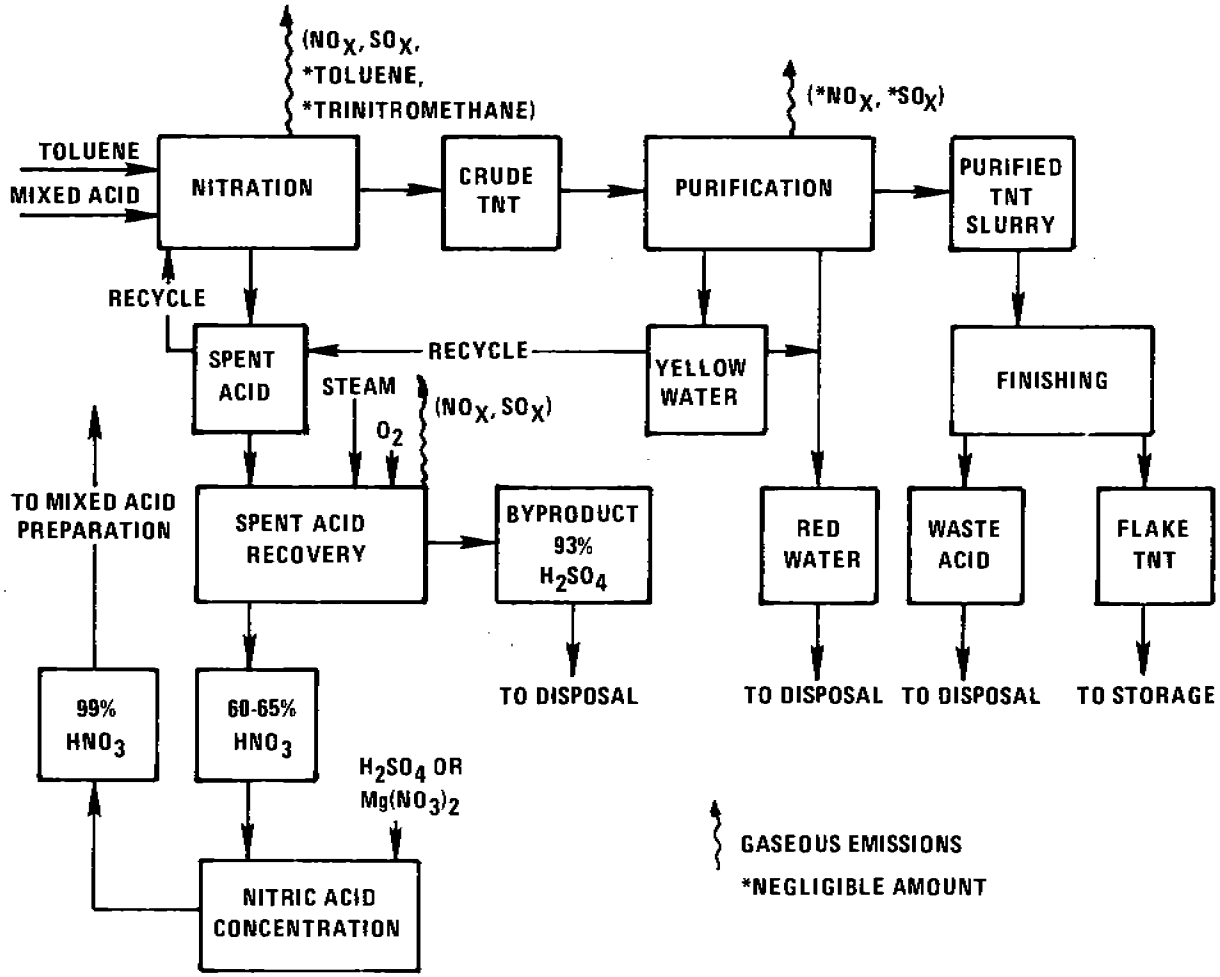

Figure 5.6-1. TNT production.

washed to remove free acid, and the wash water (yellow water) is recycled to the early nitration stages. The washed TNT is then neutralized with soda ash and treated with a 16 percent aqueous sodium sulfite (Sellite) solution to remove contaminating isomers. The Sellite waste solution (red water) from the purification process is discharged directly as a liquid waste stream, is collected and sold, or is concentrated to a slurry and incinerated. Finally, the TNT crystals are melted and passed through hot air dryers, where most of the water is evaporated. The dehydrated product is solidified, and the TNT flakes packaged for transfer to a storage or loading area.

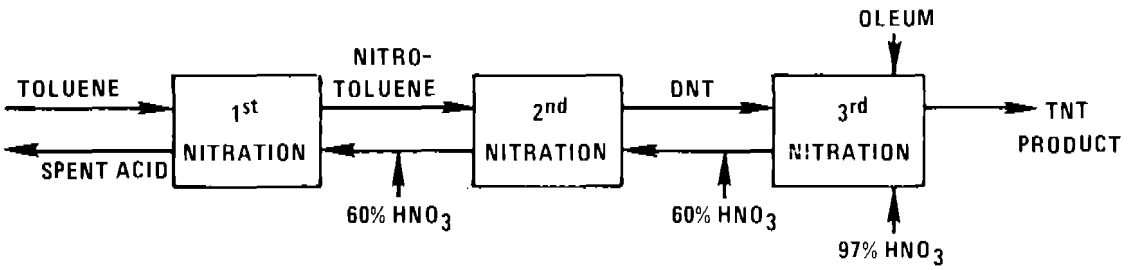

Figure 5.6-2. Nitration of toluene to form trinitrotoluene.

5.6.3 Nitrocellulose Production[1,6]

Nitrocellulose is commonly prepared by the batch type mechanical dipper process. A newly developed continuous nitration processing method is also being used. In batch production, cellulose in the form of cotton linters, fibers or specially prepared wood pulp is purified by boiling and bleaching. The dry and purified cotton linters or wood pulp are added to mixed nitric and sulfuric acid in metal reaction vessels known as dipping pots. The reaction is represented by:

$$(C_6H_7O_2(OH)_3)_x + 3HONO_2 + H_2SO_4 \rightarrow (C_6H_7O_2(ONO_2)_3)_x + 3H_2O + H_2SO_4$$

Cellulose, Nitric Acid, Sulfuric Acid, Nitrocellulose, Water, Sulfuric Acid

Following nitration, the crude NC is centrifuged to remove most of the spent nitrating acids and is put through a series of water washing and boiling treatments to purify the final product.

TABLE 5.6-1. EMISSION FACTORS FOR THE OPEN BURNING OF TNT[a,b] (lb pollution/ton TNT burned)

Type of Explosive	Particulates	Nitrogen Oxides	Carbon Monoxide	Volatile Organic Compounds
TNT	180.0	150.0	56.0	1.1

[a]Reference 7. Particulate emissions are soot. VOC is nonmethane.

[b]The burns were made on very small quantities of TNT, with test apparatus designed to simulate open burning conditions. Since such test simulations can never replicate actual open burning, it is advisable to use the factors in this Table with caution.

TABLE 5.6-2. EMISSION FACTORS FOR

EMISSION FACTOR

Process	Particulates		Sulfur oxides (SO_2)	
	kg/Mg	lb/ton	kg/Mg	lb/ton
TNT - Batch Process[c]				
Nitration reactors				
Fume recovery	—	—	—	—
Acid recovery	—	—	—	—
Nitric acid concentrators	—	—	—	—
Sulfuric acid concentrators[d]				
Electrostatic precipator (exit)	—	—	7 (2 - 20)	14 (4 - 40)
Electrostatic precipitator w/scrubber[e]	—	—	Neg.	Neg.
Red water incinerator				
Uncontrolled[f]	12.5 (0.015 - 63)	25 (0.03 - 126)	1 (0.025 - 1.75)	2 (0.05 - 3.5)
Wet scrubber[g]	0.5	1	1 (0.025 - 1.75)	2 (0.05 - 3.5)
Sellite exhaust	—	—	29.5 (0.005 - 88)	59 (0.01 - 177)
TNT - Continuous Process[h]				
Nitration reactors				
Fume recovery	—	—	—	—
Acid recovery	—	—	—	—
Red water incinerator	0.13 (0.015 - 0.25)	0.25 (0.03 - 0.5)	0.12 (0.025 - 0.22)	0.24 (0.05 - 0.43)
Nitrocellulose[h]				
Nitration reactors[i]	—	—	0.7 (0.4 - 1)	1.4 (0.8 - 2)
Nitric acid concentrator	—	—	—	—
Sulfuric acid concentrator	—	—	34 (0.2 - 67)	68 (0.4-135)
Boiling tubs	—	—	—	—

[a]For some processes, considerable variations in emissions have been reported. Average of reported values is shown first, ranges in parentheses. Where only one number is given, only one source test was available. Emission factors are in units of kg of pollutant per Mg and pounds of pollutant per ton of TNT or Nitrocellulose produced.

[b]Significant emissions of volatile organic compounds have not been reported for the explosives industry. However, negligible emissions of toluene and trinitromethane (TNM) from nitration reactors have been reported in TNT manufacture. Also, fugitive VOC emissions may result from various solvent recovery operations. See Reference 6.

[c]Reference 5.

[d]Acid mist emissions influenced by nitrobody levels and type of furnace fuel.

[e]No data available for NO_x emissions after scrubber. NO_x emissions are assumed unaffected by scrubber.

EXPLOSIVES MANUFACTURING[a,b]

RATING: C

Nitrogen oxides (NO_2)		Nitric acid mist (100% HNO_3)		Sulfuric acid mist (100% H_2SO_4)	
kg/Mg	lb/ton	kg/Mg	lb/ton	kg/ton	lb/ton
12.5 (3 - 19)	25 (6 - 38)	0.5 (0.15 - 0.95)	1 (0.3 - 1.9)	—	—
27.5 (0.5 - 68)	55 (1 - 136)	46 (0.005 - 137)	92 (0.02 - 275)	—	—
18.5 (8 - 36)	37 (16 - 72)	—	—	4.5 (0.15 - 13.5)	9 (0.3 - 27)
20 (1 - 40)	40 (2 - 80)	—	—	32.5 (0.5 - 94)	65 (1 - 188)
20 (1 - 40)	40 (2 - 80)	—	—	2.5 (2 - 3)	5 (4 - 6)
13 (0.75 - 50)	26 (1.5 - 101)	—	—	—	—
2.5	5	—	—	—	—
—	—	—	—	3 (0.3 - 8)	6 (0.6 - 16)
4 (3.35 - 5)	8 (6.7 - 10)	0.5 (0.15 - 0.95	1 (0.3 - 1.9)	—	—
1.5 (0.5 - 2.25)	3 (1 - 4.5)	0.01 (0.005 - 0.015)	0.02 (0.01 - 0.03)	—	—
3.5 (3 - 4.2)	7 (6.1 - 8.4)	—	—	—	—
7 (1.85 - 17)	14 (3.7 - 34)	9.5 (0.25 - 18)	19 (0.5 - 36)	—	—
7 (5 - 9)	14 (10 - 18)	—	—	—	—
—	—	—	—	0.3	0.6
1	2	—	—	—	—

[f]Use low end of range for modern efficient units, high end for less efficient units.
[g]Apparent reductions in NO_x and particulate after control may not be significant, because these values are based on only one test result.
[h]Reference 4.
[i]For product with low nitrogen content (12%), use high end of range. For products with higher nitrogen content, use lower end of range.

5.6.4 Emissions and Controls[2-3,5-7]

Oxides of nitrogen (NO_x) and sulfur (SO_x) are the major emissions from the processes involving the manufacture, concentration and recovery of acids in the nitration process of explosives manufacturing. Emissions from the manufacture of nitric and sulfuric acid are discussed in other Sections of this publication. Trinitromethane (TNM) is a gaseous byproduct of the nitration process of TNT manufacture. Volatile organic compound emissions result primarily from fugitive vapors from various solvent recovery operations. Explosive wastes and contaminated packaging material are regularly disposed of by open burning, and such results in uncontrolled emissions, mainly of NO_x and particulate matter. Experimental burns of several explosives to determine "typical" emission factors for the open burning of TNT are presented in Table 5.6-1.

In the manufacture of TNT, emissions from the nitrators containing NO, NO_2, N_2O, trinitromethane (TNM) and some toluene are passed through a fume recovery system to extract NO_x as nitric acid, and then are vented through scrubbers to the atmosphere. Final emissions contain quantities of unabsorbed NO_x and TNM. Emissions may also come from the production of Sellite solution and the incineration of red water. Red water incineration results in atmospheric emissions of NO_x, SO_2 and ash (primarily Na_2SO_4.)

In the manufacture of nitrocellulose, emissions from reactor pots and centrifuge are vented to an NO_x water absorber. The weak HNO_3 solution is transferred to the acid concentration system. Absorber emissions are mainly NO_x. Another possible source of emissions is the boiling tubs, where steam and acid vapors vent to the absorber.

The most important fact affecting emissions from explosives manufacture is the type and efficiency of the manufacturing process. The efficiency of the acid and fume recovery systems for TNT manufacture will directly affect the atmospheric emissions. In addition, the degree to which acids are exposed to the atmosphere during the manufacturing process affects the NO_x and SO_x emissions. For nitrocellulose production, emissions are influenced by the nitrogen content and the desired product quality. Operating conditions will also affect emissions. Both TNT and nitrocellulose can be produced in batch processes. Such processes may never reach steady state, and emission concentrations may vary considerably with time, and fluctuations in emissions will influence the efficiency of control methods.

Several measures may be taken to reduce emissions from explosive manufacturing. The effects of various control devices and process changes, along with emission factors for explosives manufacturing, are shown in Table 5.6-2. The emission factors are all related to the amount of product produced and are appropriate either for estimating long term emissions or for evaluating plant operation at full production conditions. For short time periods, or for plants with intermittent operating schedules, the emission

factors in Table 5.6-2 should be used with caution, because processes not associated with the nitration step are often not in operation at the same time as the nitration reactor.

References for Section 5.6

1. R. N. Shreve, Chemical Process Industries, 3rd Ed., McGraw-Hill Book Company, New York, 1967.

2. Unpublished data on emissions from explosives manufacturing, Office of Criteria and Standards, National Air Pollution Control Administration, Durham, NC, June 1970.

3. F. B. Higgins, Jr., et al., "Control of Air Pollution From TNT Manufacturing", Presented at 60th annual meeting of Air Pollution Control Association, Cleveland, OH, June 1967.

4. Air Pollution Engineering Source Sampling Surveys, Radford Army Ammunition Plant, U. S. Army Environmental Hygiene Agency, Edgewood Arsenal, MD, July 1967, July 1968.

5. Air Pollution Engineering Source Sampling Surveys, Volunteer Army Ammunition Plant and Joliet Army Ammunition Plant, U. S. Army Environmental Hygiene Agency, Edgewood Arsenal, MD, July 1967, July 1968.

6. Industrial Process Profiles for Environmental Use: The Explosives Industry, EPA-600/2-77-0231, U. S. Environmental Protection Agency, Research Triangle Park, NC, February 1977.

7. Specific Air Pollutants from Munitions Processing and Their Atmospheric Behavior, Volume 4: Open Burning and Incineration of Waste Munitions, Research Triangle Institute, Research Triangle Park, NC, January 1978.

5.7 HYDROCHLORIC ACID

Hydrochloric acid is manufactured by a number of different chemical processes. Approximately 80 percent of the hydrochloric acid, however, is produced by the by-product hydrogen chloride process, which will be the only process discussed in this section. The synthesis process and the Mannheim process are of secondary importance.

5.7.1 Process Description[1]

By-product hydrogen chloride is produced when chlorine is added to an organic compound such as benzene, toluene, and vinyl chloride. Hydrochloric acid is produced as a by-product of this reaction. An example of a process that generates hydrochloric acid as a by-product is the direct chlorination of benzene. In this process benzene, chlorine, hydrogen, air, and some trace catalysts are the raw materials that produce chlorobenzene. The gases from the reaction of benzene and chlorine consist of hydrogen chloride, benzene, chlorobenzenes, and air. These gases are first scrubbed in a packed tower with a chilled mixture of monochlorobenzene and dichlorobenzene to condense and recover any benzene or chlorobenzene. The hydrogen chloride is then absorbed in a falling film absorption plant.

5.7.2 Emissions

The recovery of the hydrogen chloride from the chlorination of an organic compound is the major source of hydrogen chloride emissions. The exit gas from the absorption or scrubbing system is the actual source of the hydrogen chloride emitted. Emission factors for hydrochloric acid produced as by-product hydrogen chloride are presented in Table 5.7-1.

Table 5.7-1. EMISSION FACTORS FOR HYDROCHLORIC ACID MANUFACTURING[a]
EMISSION FACTOR RATING: B

Type of process	Hydrogen chloride emissions	
	lb/ton	kg/MT
By-product hydrogen chloride		
With final scrubber	0.2	0.1
Without final scrubber	3	1.5

[a]Reference 1.

Reference for Section 5.7

1. Atmospheric Emissions from Hydrochloric Acid Manufacturing Processes. U.S. DHEW, PHS, CPEHS, National Air Pollution Control Administration. Durham, N.C. Publication Number AP-54. September 1969.

5.8 HYDROFLUORIC ACID

5.8.1 Process Description[1-3]

Nearly all of the hydrofluoric acid, or hydrogen fluoride, currently produced in the United States is manufactured by the reaction of acid-grade fluorospar with sulfuric acid in the reaction:

$$CaF_2 + H_2SO_4 \longrightarrow CaSO_4 + 2\ HF$$

CaF_2	H_2SO_4	$CaSO_4$	$2\ HF$
Calcium Fluoride (Fluorospar)	Sulfuric Acid	Calcium Sulfate (Anhydrite)	Hydrogen Fluoride (Hydrofluoric Acid)

The fluorospar typically contains 97.5 percent or more calcium fluoride, 1 percent or less silicon dioxide (SiO_2), and 0.05 percent or less sulfur, with calcium carbonate ($CaCO_3$) as the principal remainder. See Figure 5.8-1 for a typical process flow diagram.

The reaction to produce the acid is endothermic and is usually carried out in externally heated horizontal rotary kilns for 30 to 60 minutes at 390 to 480°F (200-250°C). Dry fluorospar and a slight excess of sulfuric acid are fed continuously to the front end of the kiln. Anhydrite is removed through an air lock at the opposite end. The gaseous reaction products - hydrogen fluoride, excess sulfuric acid from the primary reaction, silicon tetrafluoride, sulfur dioxide, carbon dioxide, and water produced in secondary reactions - are removed from the front end of the kiln with entrained particulate materials. The particulates are removed from the gas stream by a dust separator, and the sulfuric acid and water are removed by a precondenser. The hydrogen fluoride vapors are condensed in refrigerant condensers and are delivered to an intermediate storage tank. The uncondensed gases are passed through a sulfuric acid absorption tower to remove most of the remaining hydrogen fluoride, which is also delivered with the residual sulfuric acid to the intermediate storage tank. The remaining gases are passed through water scrubbers, where the silicon tetrafluoride and remaining hydrogen fluoride are recovered as fluosilicic acid (H_2SiF_6). The hydrogen fluoride and sulfuric acid are delivered to distillation columns, where the hydrofluoric acid is extracted at 99.98 percent purity. Weaker concentrations (typically 70-80 percent) are prepared by dilution with water.

5.8.2 Emissions and Controls[1,2,4]

Air polluting emissions are suppressed to a great extent by the condensing, scrubbing and absorption equipment used in the recovery and purification of the hydrofluoric and fluosilicic acid products. Particulate material in the process gas stream is controlled by a dust separator near the outlet of the kiln and is recycled to the kiln for further

Figure 5.8-1. Process flow diagram of a typical hydrofluoric acid plant.

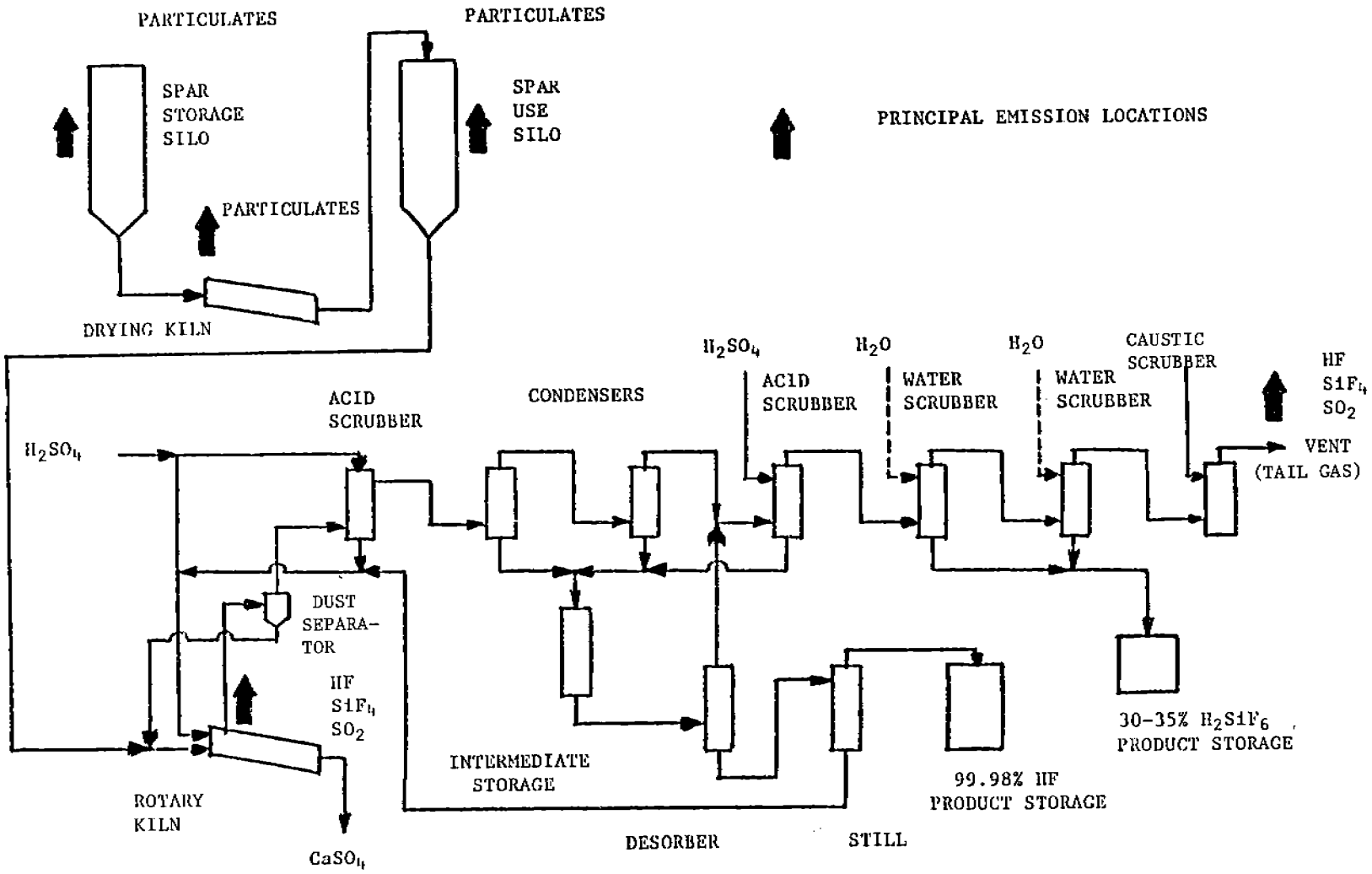

Table 5.8-1. EMISSION FACTORS FOR HYDROFLUORIC ACID MANUFACTURE

Type of Operation and Control	Control efficiency (%)	Emissions				Emission Factor Rating
		Gases		Particulates (Spar)		
		lb/ton acid	kg/MT acid	lb/ton Fluorospar	kg/MT Fluorospar	
Spar drying[a]						
Uncontrolled	0			75.0	37.5	C
Fabric filter	99			0.8	0.4	
Spar handling silos[b]						
Uncontrolled	0			60.0	30.0	D
Fabric filter	99			0.6	0.3	
Transfer operations						
Uncontrolled	0			6.0	3.0	E
Covers, additives	80			1.2	0.6	
Tail gas[c]						
Uncontrolled	0	25.0 (HF) 30.0 (SiF_4) 45.0 (SO_2)	12.5 (HF) 15.0 (SiF_4) 22.5 (SO_2)			D
Caustic scrubber	99	0.2 (HF) 0.3 (SiF_4) 0.5 (SO_2)	0.1 (HF) 0.2 (SiF_4) 0.3 (SO_2)			

[a] Reference 1. Averaged from information provided by four plants. Hourly fluorospar input calculated from reported 1975 year capacity, assuming stoichiometric amount of calcium fluoride and 97.5% content in fluorospar. Hourly emission rates calculated from reported baghouse controlled rates. Values averaged were:

Plant	1975 capacity	Emissions lb/Ton Fluorospar
1	15,000 ton HF	106
2	20,000 ton HF	130
3	50,000 ton HF	42
4	11,000 ton HF	30

[b] Information as in Note a. Four plants averaged for silo emissions, two plants for transfer operations emissions.

[c] Information as in Note a. Three plants averaged. HF and SiF_4 emission factors verified by information in Reference 4.

processing. The precondenser removes water vapor and sulfuric acid mist, and the condenser, acid scrubber and water scrubbers remove all but small amounts of hydrogen fluoride, silicon tetrafluoride, sulfur dioxide and carbon dioxide from the tail gas. A caustic scrubber is employed to reduce further the levels of these pollutants in the tail gas.

Dust emissions result from the handling and drying of the fluorospar, and they are controlled with bag filters at the spar storage silos and drying kilns, their principal emission points.

Hydrogen fluoride emissions are minimized by maintaining a slight negative pressure in the kiln during normal operations. Under upset conditions, a standby caustic scrubber or a bypass to the tail gas caustic scrubber are used to control hydrogen fluoride emissions from the kiln.

Fugitive dust emissions from spar handling and storage are controlled with flexible coverings and chemical additives.

Table 5.8-1 lists the emission factors for the various process operations. The principal emission locations are shown in the process flow diagram, Figure 5.8-1.

References for Section 5.8

1. Screening Study on Feasibility of Standards of Performance for Hydrofluoric Acid Manufacture, EPA-450/3-78-109, U.S. Environmental Protection Agency, Research Triangle Park, NC, October 1978.

2. "Hydrofluoric Acid", Kirk-Othmer Encyclopedia of Chemical Technology, Vol. 9, Interscience Publishers, New York, 1965.

3. W. R. Rogers and K. Muller, "Hydrofluoric Acid Manufacture", Chemical Engineering Progress, 59(5):85-8, May 1963.

4. J. M. Robinson, et al., Engineering and Cost Effectiveness Study of Fluoride Emissions Control, Vol. 1, PB 207 506, National Technical Information Service, Springfield, VA, 1972.

5.9 NITRIC ACID

5.9.1 Process Description

Weak Acid Production[1] - Nearly all the nitric acid produced in the United States is manufactured by the catalytic oxidation of ammonia (Figure 5.9-1). This process typically consists of three steps, each of which corresponds to a distinct chemical reaction. First, a 1:9 ammonia/air mixture is oxidized at high temperature (1380 - 1470°F or 750 - 800°C) as it passes through a platinum/rhodium catalyst, according to the reaction:

$$\underset{\text{Ammonia}}{4NH_3} + \underset{\text{Oxygen}}{5O_2} \rightarrow \underset{\text{Nitric oxide}}{4NO} + \underset{\text{Water}}{6H_2O} \qquad (1)$$

After the process stream is cooled to 100°F (38°C) or less by passage through a cooler/condenser, the nitric oxide reacts with residual oxygen to form nitrogen dioxide:

$$2NO + O_2 \rightarrow \underset{\text{Nitrogen dioxide}}{2NO_2} \rightleftarrows \underset{\text{Nitrogen tetroxide}}{N_2O_4} \qquad (2)$$

Finally, the gases are introduced into a bubble cap plate absorption column for contact with a countercurrent stream of water. The exothermic reation that occurs is:

$$3NO_2 + H_2O \rightarrow 2HNO_3 + NO \qquad (3)$$

The production of nitric oxide in Reaction 3 necessitates the introduction of a secondary air stream into the column to oxidize it into nitrogen dioxide, thereby perpetuating the absorption operation.

In the past, nitric acid plants have been operated at a single pressure, ranging from 14.7 to 176 pounds per square inch (100 - 1200 kPa). However, since Reaction 1 is favored by low pressures and Reactions 2 and 3 are favored by higher pressures, newer plants tend to be operating two pressure systems, incorporating a compressor between the oxidizer and the condenser.

The spent gas flows from the top of the absorption tower to an entrainment separator for acid mist removal, through a heat exchanger in the ammonia oxidation unit for energy absorption by the ammonia stream, through an expander for energy recovery, and finally to the stack. In most plants, however, the tail gas is treated to remove residual nitrogen oxides before release to the atmosphere.

High Strength Acid Production[1]- The nitric acid concentration process consists of feeding strong sulfuric acid and 50 - 70 percent nitric acid to the top of a packed dehydrating column at approximately atmospheric pressure. The acid mixture flows downward counter to ascending vapors. Concentrated nitric acid leaves the top of the column as 98

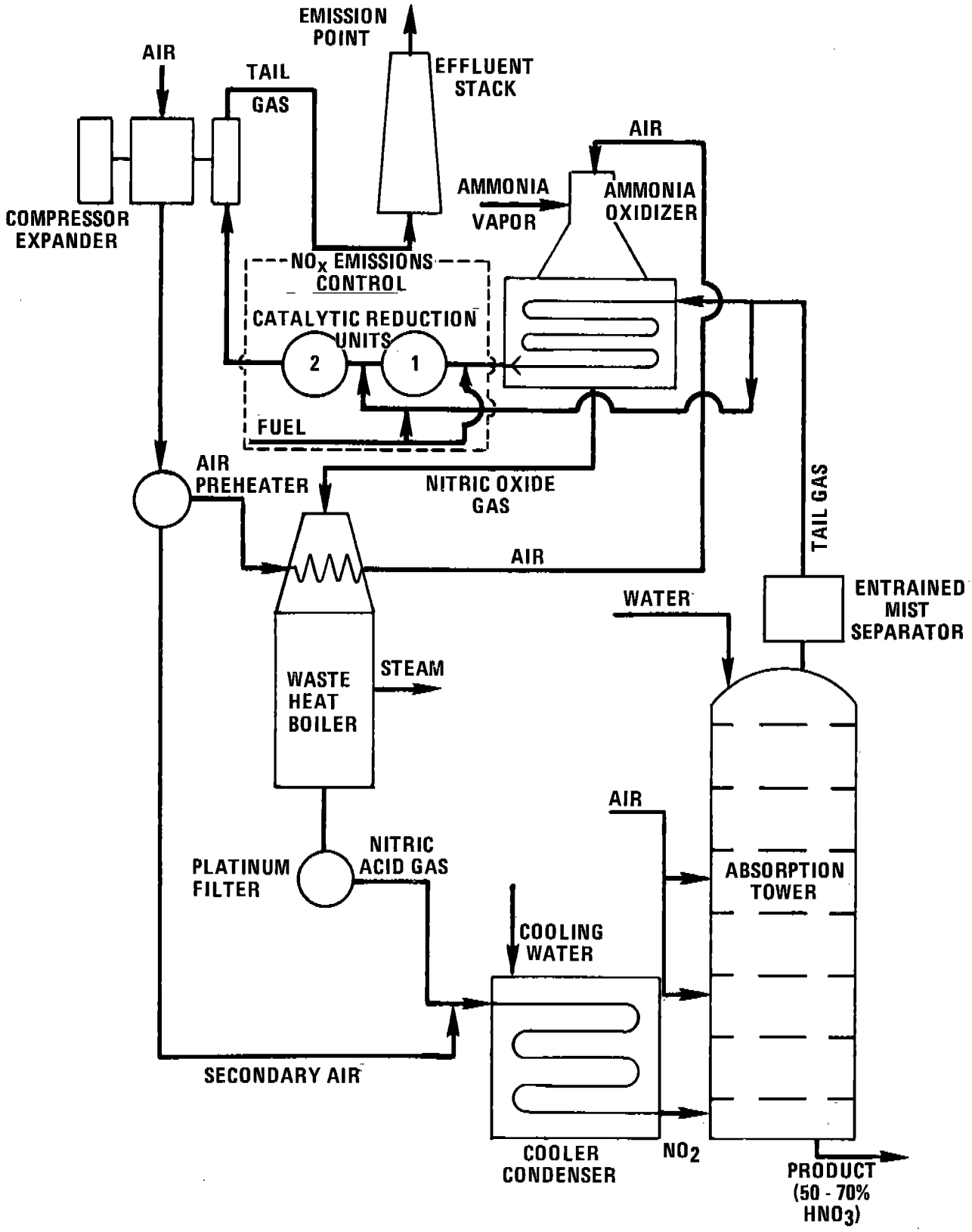

Figure 5.9-1. Flow diagram of typical nitric acid plant using pressure process (high strength acid unit not shown).

percent vapor, containing a small amount of NO_2 and O_2 from dissociation of nitric acid. The concentrated acid vapor leaves the column and goes to a bleacher and countercurrent condenser system to effect the condensation of strong nitric acid and the separation of oxygen and nitrogen oxide byproducts. These byproducts then flow to an absorption column where the nitric oxide mixes with auxiliary air to form NO_2, which is recovered as weak nitric acid. Unreacted gases are vented to the atmosphere from the top of the absorption column.

TABLE 5.9-1. NITROGEN OXIDE EMISSIONS FROM NITRIC ACID PLANTS[a]

EMISSION FACTOR RATING: B

Source	Control Efficiency, %	Emissions lb/ton Acid	Emissions kg/MT Acid
Weak Acid Plant Tail Gas			
Uncontrolled[b]	0	43 (14 - 86)	22 (7 - 43)
Catalytic reduction			
Natural gas[b]	99.1	0.4 (0.05 - 1.2)	0.2 (0.03 - 0.6)
Hydrogen[c]	97 - 99.8	0.8 (0 - 1.5)	0.4 (0 - 0.8)
Natural gas/hydrogen (25%/75%)[d]	98 - 98.5	1.0 (0.8 - 1.1)	0.5 (0.4 - 0.6)
Extended absorption[b]	95.8	1.8 (0.8 - 2.7)	0.9 (0.4 - 1.4)
High Strength Acid Plant[e]	NA[f]	10	5

[a]Based on 100% acid. Production rates are in terms of total weight of product (water and acid). A plant producing 500 tons (454 MT)/day of 55 wt. % nitric acid is calculated as producing 275 tons (250 MT)/day of 100% acid. Ranges in parentheses. NA: Not Applicable.

[b]Reference 3. Based on a study of 18 plants.

[c]References 1 and 2. Based on data from 2 plants with these process conditions: production rate, 130 tons (118 MT)/day at 100% rated capacity; absorber exit temperature, 90°F (32°C); absorber exit pressure, 87 psig (600 kPa); acid strength, 57%.

[d]References 1 and 2. Based on data from 2 plants with these process conditions: production rate, 208 tons (188 MT)/day at 100% rated capacity; absorber exit temperature, 90°F (32°C); absorber exit presure, 80 psig (550 kPa); acid strength, 57%.

[e]References 1 and 2. Based on a unit that produces 3000 lb/hr (6615 kg/hr) at 100% rated capacity, of 98% nitric acid.

The two most common techniques used to control absorption tower tail gas emissions are extended absorption and catalytic reduction. The extended absorption technique reduces emissions by increasing the efficiency of the absorption tower. This efficiency increase is achieved by increasing the number of absorber trays, operating the absorber at higher pressures, or cooling the weak acid liquid in the absorber.

In the catalytic reduction process (often termed catalytic oxidation), tail gases are heated to ignition temperature, mixed with fuel (natural gas, hydrogen, carbon monoxide or ammonia) and passed over a catalyst. In the presence of the catalyst, the fuels are oxidized, and the nitrogen oxides are reduced to N_2. The extent of reduction of NO_2 and NO to N_2 is a function of plant design, fuel type operating temperature and pressure, space velocity through the reduction catalytic reactor, type of catalyst, and reactant concentration. See Table 5.9-1.

Two seldom used alternative control devices for absorber tail gas are molecular sieves and wet scrubbers. In the molecular sieve technique, tail gas is contacted with an active molecular sieve which catalyticly oxidizes NO to NO_2 and selectively adsorbs the NO_2. The NO_2 is then thermally stripped from the molecular sieve and returned to the absorber. In the scrubbing technique, absorber tail gas is scrubbed with an aqueous solution of alkali hydroxides or carbonates, ammonia, urea or potassium permanganate. The NO and NO_2 are absorbed and recovered as nitrate or nitrite salts.

Comparatively small amounts of nitrogen oxides are also lost from acid concentrating plants. These losses (mostly NO_2) are from the condenser system, but the emissions are small enough to be controlled easily by inexpensive absorbers.

Acid mist emissions do not occur from the tail gas of a properly operated plant. The small amounts that may be present in the absorber exit gas streams are removed by a separator or collector prior to entering the catalytic reduction unit or expander.

Emissions from acid storage tanks may occur during tank filling. The displaced gases are equal in volume to the quantity of acid added to the tanks.

Nitrogen oxide emissions (expressed as NO_2) are presented for weak nitric acid plants in Table 5.9-1. The emission factors vary considerably with the type of control employed and with process conditions. For comparison purposes, the EPA New Source Performance Standard for both new and modified plants is 3.0 pounds per ton (1.5 kg/MT) of 100 percent acid produced, maximum 3 hour average, expressed as NO_2.

5.9.2 Emissions and Controls[1]

Emissions from nitric acid manufacture consist primarily of nitric oxide, nitrogen dioxide (which accounts for visible emissions) and trace amounts of nitric acid mist. By far, the major source of nitrogen oxides is the tail gas from the acid absorption tower (Table 5.9-1). In general, the quantity of NO_x emissions is directly related to the kinetics of the nitric acid formation reaction and absorption tower design.

The two most common techniques used to control absorption tower tail gas emissions are extended absorption and catalytic reduction. The extended absorption technique reduces emissions by increasing the efficiency of the absorption tower. This efficiency increase is achieved by increasing the number of absorber trays, operating the absorber at higher pressures, or cooling the weak acid liquid in the absorber.

In the catalytic reduction process (often termed catalytic oxidation), tail gases are heated to ignition temperature, mixed with fuel (natural gas, hydrogen, carbon monoxide or ammonia) and passed over a catalyst. In the presence of the catalyst, the fuels are oxidized, and the nitrogen oxides are reduced to N_2. The extent of reduction of NO_2 and NO to N_2 is a function of plant design, fuel type operating temperature and pressure, space velocity through the reduction catalytic reactor, type of catalyst, and reactant concentration. See Table 5.9-1.

Two seldom used alternative control devices for absorber tail gas are molecular sieves and wet scrubbers. In the molecular sieve technique, tail gas is contacted with an active molecular sieve which catalyticly oxidizes NO to NO_2 and selectively adsorbs the NO_2. The NO_2 is then thermally stripped from the molecular sieve and returned to the absorber. In the scrubbing technique, absorber tail gas is scrubbed with an aqueous solution of alkali hydroxides or carbonates, ammonia, urea or potassium permanganate. The NO and NO_2 are absorbed and recovered as nitrate or nitrite salts.

Comparatively small amounts of nitrogen oxides are also lost from acid concentrating plants. These losses (mostly NO_2) are from the condenser system, but the emissions are small enough to be controlled easily by inexpensive absorbers.

Acid mist emissions do not occur from the tail gas of a properly operated plant. The small amounts that may be present in the absorber exit gas streams are removed by a separator or collector prior to entering the catalytic reduction unit or expander.

Emissions from acid storage tanks may occur during tank filling. The displaced gases are equal in volume to the quantity of acid added to the tanks.

Nitrogen oxide emissions (expressed as NO_2) are presented for weak nitric acid plants in Table 5.9-1. The emission factors vary considerably with the type of control employed and with process conditions. For comparison purposes, the EPA New Source Performance Standard for both

new and modified plants is 3.0 pounds per ton (1.5 kg/MT) of 100 percent acid produced, maximum 3 hour average, expressed as NO_2.

References for Section 5.9

1. Control of Air Pollution from Nitric Acid Plants, Office of Air Quality Planning and Standards, U.S. Environmental Protection Agency, Research Triangle Park, NC, August 1971. Unpublished.

2. Atmospheric Emissions from Nitric Acid Manufacturing Processes, 999-AP-27, U.S. Department of Health, Education and Welfare, Cincinnati, OH, 1966.

3. Marvin Drabkin, A Review of Standards of Performance for New Stationary Sources - Nitric Acid Plants, EPA-450/3-79-013, U.S. Environmental Protection Agency, Research Triangle Park, NC, March 1979.

4. "Standards of Performance for Nitric Acid Plants", 40 CFR 60. G.

5.10 PAINT AND VARNISH

5.10.1 Paint Manufacturing[1]

The manufacture of paint involves the dispersion of a colored oil or pigment in a vehicle, usually an oil or resin, followed by the addition of an organic solvent for viscosity adjustment. Only the physical processes of weighing, mixing, grinding, tinting, thinning and packaging take place. No chemical reactions are involved.

These processes take place in large mixing tanks at approximately room temperature.

The primary factors affecting emissions from paint manufacture are care in handling dry pigments, types of solvents used and mixing temperature. About 1 or 2 percent of the solvent is lost even under well controlled conditions. Particulate emissions amount to 0.5 to 1.0 percent of the pigment handled.

Afterburners can reduce emitted volatile organic compounds (VOC) by 99 percent and particulates by about 90 percent. A water spray and oil filter system can reduce particulate emissions from paint blending by 90 percent.

5.10.2 Varnish Manufacturing[1-3,5]

The manufacture of varnish also involves the mixing and blending of various ingredients to produce a wide range of products. However in this case, chemical reactions are initiated by heating. Varnish is cooked in either open or enclosed gas fired kettles for periods of 4 to 16 hours at temperatures of 93 to 340°C (200 to 650°F).

Varnish cooking emissions, largely in the form of volatile organic compounds, depend on the cooking temperatures and times, the solvent used, the degree of tank enclosure and the type of air pollution controls used. Emissions from varnish cooking range from 1 to 6 percent of the raw material.

To reduce organic compound emissions from the manufacture of paint and varnish, control techniques include condensers and/or adsorbers on solvent handling operations, and scrubbers and afterburners on cooking operations. Afterburners can reduce volatile organic compounds by 99 percent. Emission factors for paint and varnish are shown in Table 5.10-1.

TABLE 5.10-1. UNCONTROLLED EMISSION FACTORS FOR PAINT AND VARNISH MANUFACTURING[a,b]

EMISSION FACTOR RATING: C

Type of product	Particulate		Nonmethane VOC[c]	
	kg/Mg pigment	lb/ton pigment	kg/Mg of product	lb/ton of product
Paint[d]	10	20	15	30
Varnish				
Bodying oil	-	-	20	40
Oleoresinous	-	-	75	150
Alkyd	-	-	80	160
Acrylic	-	-	10	20

[a]References 2, 4-8.

[b]Afterburners can reduce VOC emissions by 99% and particulates by about 90%. A water spray and oil filter system can reduce particulates by about 90%.

[c]Expressed as undefined organic compounds whose composition depends upon the type of solvents used in the manfacture of paint and varnish.

[d]Reference 4. Particulate matter (0.5 - 1.0 %) is emitted from pigment handling.

References for Section 5.10

1. Air Pollutant Emission Factors, APTD-0923, U. S. Environmental Protection Agency, Research Triangle Park, NC, April 1970.

2. R. L. Stenburg, "Controlling Atmospheric Emissions from Paint and Varnish Operations, Part I", Paint and Varnish Production, September 1959.

3. Private Communication between Resources Research, Inc., Reston, VA, and National Paint, Varnish and Lacquer Association, Washington, DC., September 1969.

4. Unpublished engineering estimates based on plant visits in Washington, DC, Resources Research, Inc., Reston, VA, October 1969.

5. Air Pollution Engineering Manual, Second Edition, AP-40, U. S. Environmental Protection Agency, Research Triangle Park, NC, May 1973.

6. E. G. Lunche, et al., "Distribution Survey of Products Emitting Organic Vapors in Los Angeles County", Chemical Engineering Progress, 53(8):371-376, August 1957.

7. Communication on emissions from paint and varnish operations between Resources Research, Inc., Reston, VA, and G. Sallee, Midwest Research Institute, Kansas City, MO, December 17, 1969.

8. Communication between Resources Research, Inc., Reston, VA, and Roger Higgins, Benjamin Moore Paint Company, June 25, 1968.

5.11 PHOSPHORIC ACID

Phosphoric acid is produced by two principal methods, the wet process and the thermal process. The wet process is employed when the acid is to be used for fertilizer production. Thermal process phosphoric acid is of higher purity and is used in the manufacture of high grade chemical and food products.

5.11.1 Process Description[1,2]

5.11.1.1 Wet Process Acid Production - In modern wet process phosphoric acid plants, as shown in Figure 5.11-1, finely ground phosphate rock, which contains 31 to 35.5 percent phosphorus pentoxide (P_2O_5), is continuously fed into a reactor with sulfuric acid which decomposes the phosphate rock. In order to make the strongest phosphoric acid possible and to decrease later evaporation costs, 93 or 98 percent sulfuric acids are normally used. Because the proper ratio of acid to rock in the reactor must be maintained as closely as possible, precise automatic process control equipment is employed in the regulation of these two feed streams.

Gypsum crystals ($CaSO_4 \cdot 2H_2O$) are precipitated by the phosphate rock and sulfuric acid reaction. There is little market for the gypsum, so it is handled as waste, filtered out of the acid and sent to settling ponds. Approximately 0.7 acres of cooling and settling pond are required for every ton of daily P_2O_5 production.

Considerable heat is generated in the reactor, which must be removed. In older plants, this is done by blowing air over the hot slurry surface. Modern plants use vacuum flash cooling of part of the slurry, then sending it back into the reactor.

The reaction slurry is held in the reactor for periods of up to eight hours, depending on the rock and reactor design, and is then sent to be filtered. This produces a 32 percent acid solution, which generally needs concentrating for further use. Current practice is to concentrate it in two or three vacuum evaporators to about 54 percent P_2O_5.

5.11.1.2 Thermal Process Acid Production - Raw materials for the production of phosphoric acid by the thermal process are elemental (yellow) phosphorus, air and water. Thermal process phosphoric acid manufacture, as shown in Figure 5.11-2, typically involves three steps.

First, the liquid elemental phosphorus is burned (oxidized) in a combustion chamber at temperatures of 3000 to 5000°F (1650 - 2760°C) to form phosphorus pentoxide. Then, the phosphorus pentoxide is hydrated with dilute acid or water to produce phosphoric acid liquid and mist. The final step is to remove the phosphoric acid mist from the gas stream.

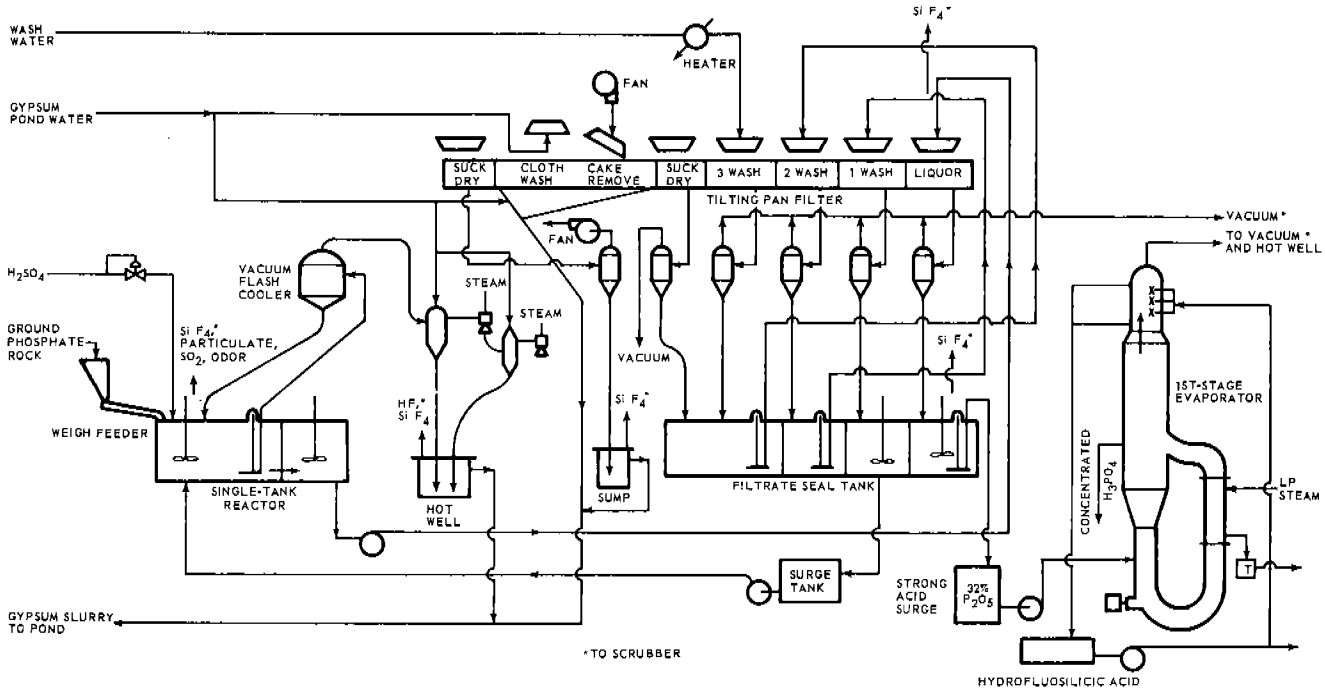

Figure 5.11-1. Flow diagram of wet process phosphoric acid plant.

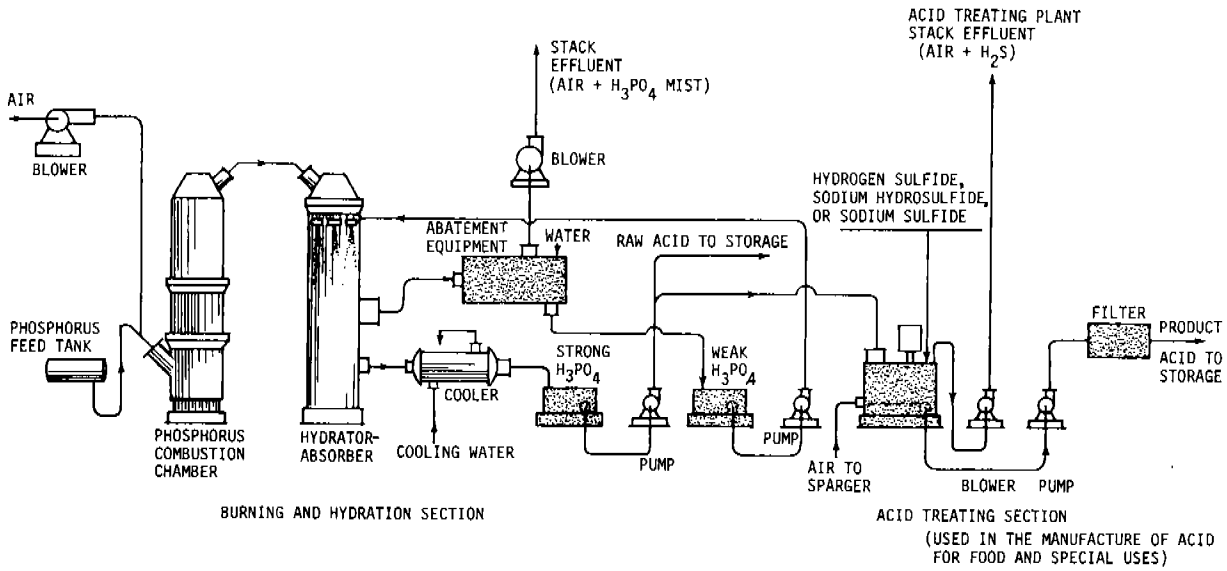

Figure 5.11-2. Flow diagram of thermal process phosphoric acid plant.

The reactions involved are:

$$P_4 + 5\ O_2 \rightarrow P_4O_{10}$$

$$P_4O_{10} + 6\ H_2O \rightarrow 4\ H_3PO_4$$

Thermal process acid normally contains 75 to 85 percent phosphoric acid (H_3PO_4). In efficient plants, about 99.9 percent of the phosphorus burned is recovered as acid.

5.11.2 Emissions and Controls[1-3]

5.11.2.1 Wet Process Emissions and Controls - Gaseous fluorides, mostly silicon tetrafluoride and hydrogen fluoride, are the major emissions from wet process acid. Phosphate rock contains 3.5 to 4.0 percent fluorine, and the final distribution of this fluorine in wet process acid manufacture varies widely. In general, part of the fluorine goes with the gypsum, part with the phosphoric acid product, and the rest is vaporized in the reactor or evaporator. The proportions and amounts going with the gypsum and acid depend on the nature of the rock and process conditions. Disposition of the volatilized fluorine depends on the design and operation of the plant. Substantial amounts can pass off into the air, unless effective scrubbers are used. Some of the fluorine which is carried to the settling ponds with the gypsum will get into the atmosphere, once the pond water is saturated with fluorides.

The reactor, where phosphate rock is decomposed by sulfuric acid, is the main source of atmospheric contaminants. Fluoride emissions accompany the air used to cool the reactor slurry. Vacuum flash cooling has replaced the air cooling method to a large extent, since emissions are minimized in the closed system.

Acid concentration by evaporation provides another source of fluoride emissions. It has been estimated that 20 to 40 percent of the fluorine originally present in the rock vaporizes in this operation.

Total particulate emissions directly from process equipment were measured for one digester and for one filter. As much as 11 pounds of particulates per ton of P_2O_5 were produced by the digester, and approximately 0.2 pounds per ton of P_2O_5 were released by the filter. Of this particulate, 3 to 6 percent was fluorides.

Particulate emissions occurring from phosphate rock handling are covered in Section 8.18.

5.11.2.2 Thermal Process Emissions and Controls - The principal atmospheric emission from the thermal process is phosphoric acid mist (H_3PO_4) contained in the gas stream from the hydrator. The particle size of the acid mist ranges from 0.4 to 2.6 micrometers. It is not uncommon for as much as half of the total phosphorus pentoxide to be present as liquid phosphoric acid particles suspended in the gas stream.

Economical operation of the process demands that this potential loss be controlled, so all plants are equipped with some type of emission control equipment.

Control equipment commonly used in thermal process phosphoric acid plants includes venturi scrubbers, cyclonic separators with wire mesh mist eliminators, fiber mist eliminators, high energy wire mesh contactors, and electrostatic precipitators.

Table 5.11-1. EMISSION FACTORS FOR PHOSPHORIC ACID PRODUCTION

EMISSION FACTOR RATING: B

Source	Particulates[a]		Fluorine[b]	
	lb/ton	kg/MT	lb/ton	kg/MT
Wet Process				
Reactor, uncontrolled	-	-	56.4	28.2
Gypsum settling and cooling ponds[c]	-	-	1.12	0.56
Condenser, uncontrolled	-	-	61.2	30.6
Typical controlled emissions[d]	-	-	.02-.07	.01-.04
Thermal Process[e,f]				
Packed tower (95.5%)	2.14	1.07	-	-
Venturi scrubber (97.5%)	2.53	1.27	-	-
Glass fiber mist eliminator (96.0 - 99.9%)	0.69	0.35	-	-
Wire mesh mist eliminator (95.0%)	5.46	2.73	-	-
High pressure drop mist eliminator (99.9%)	0.11	0.06	-	-
Electrostatic precipitator (98 - 99%)	1.66	0.83	-	-

[a]Acid mist particulates (0.4 - 2.6 μm).
[b]References 1 and 3. Pounds of fluorine (as gaseous fluorides) per ton of P_2O_5 produced. Based on a material balance of fluorine from phosphate rock of 3.9% fluorine and 33% P_2O_5.
[c]Approximately 0.7 acres (0.3 hectares) of cooling and settling pond are required to produce 1 ton of P_2O_5 daily. Emissions in terms of pond area would be 1.60 lb/acre per day (1.79 kg/hectare per day).
[d]Reference 5.
[e]Reference 3. Pounds of particulate per ton of P_2O_5.
[f]Numbers in parentheses indicate the control efficiency associated with each device.

References for Section 5.11

1. Atmospheric Emissions from Wet Process Phosphoric Acid Manufacture, AP-57, National Air Pollution Control Administration, Raleigh, NC, April 1970.

2. Atmospheric Emissions from Thermal Process Phosphoric Acid Manufacture, AP-48, National Air Pollution Control Administration, Durham, NC, October 1968.

3. Control Techniques for Fluoride Emissions, Unpublished, U.S. Public Health Service, Research Triangle Park, NC, September 1970.

4. W.R. King, "Fluorine Air Pollution from Wet Process Phosphoric Acid Plants - Water Ponds", Doctoral Thesis, Supported by EPA Research Grant No. R-800950, North Carolina State University, Raleigh, NC, 1974.

5. Final Guideline Document: Control of Fluoride Emissions from Existing Phosphate Fertilizer Plants, EPA-450/2-77-005, U.S. Environmental Protection Agency, Research Triangle Park, NC, March 1977.

5.12 PHTHALIC ANHYDRIDE

5.12.1 General[1]

Phthalic anhydride (PAN) production in the United States in 1972 was 0.9 billion pounds per year; this total is estimated to increase to 2.2 billion pounds per year by 1985. Of the current production, 50 percent is used for plasticizers, 25 percent for alkyd resins, 20 percent for unsaturated polyester resins, and 5 percent for miscellaneous and exports. PAN is produced by catalytic oxidation of either ortho-xylene or naphthalene. Since naphthalene is a higher priced feedstock and has a lower feed utilization (about 1.0 lb PAN/lb o-xylene versus 0.97 lb PAN/lb naphthalene), future production growth is predicted to utilize o-xylene. Because emission factors are intended for future as well as present application, this report will focus mainly on PAN production utilizing o-xylene as the main feedstock.

The processes for producing PAN by o-xylene or naphthalene are the same except for reactors, catalyst handling, and recovery facilities required for fluid bed reactors.

In PAN production using o-xylene as the basic feedstock, filtered air is preheated, compressed, and mixed with vaporized o-xylene and fed into the fixed-bed tubular reactors. The reactors contain the catalyst, vanadium pentoxide, and are operated at 650 to 725°F (340 to 385°C). Small amounts of sulfur dioxide are added to the reactor feed to maintain catalyst activity. Exothermic heat is removed by a molten salt bath circulated around the reactor tubes and transferred to a steam generation system.

Naphthalene-based feedstock is made up of vaporized naphthalene and compressed air. It is transferred to the fluidized bed reactor and oxidized in the presence of a catalyst, vanadium pentoxide, at 650 to 725°F (340 to 385°C). Cooling tubes located in the catalyst bed remove the exothermic heat which is used to produce high-pressure steam. The reactor effluent consists of PAN vapors, entrained catalyst, and various by-products and non-reactant gas. The catalyst is removed by filtering and returned to the reactor.

The chemical reactions for air oxidation of o-xylene and naphthalene are as follows.

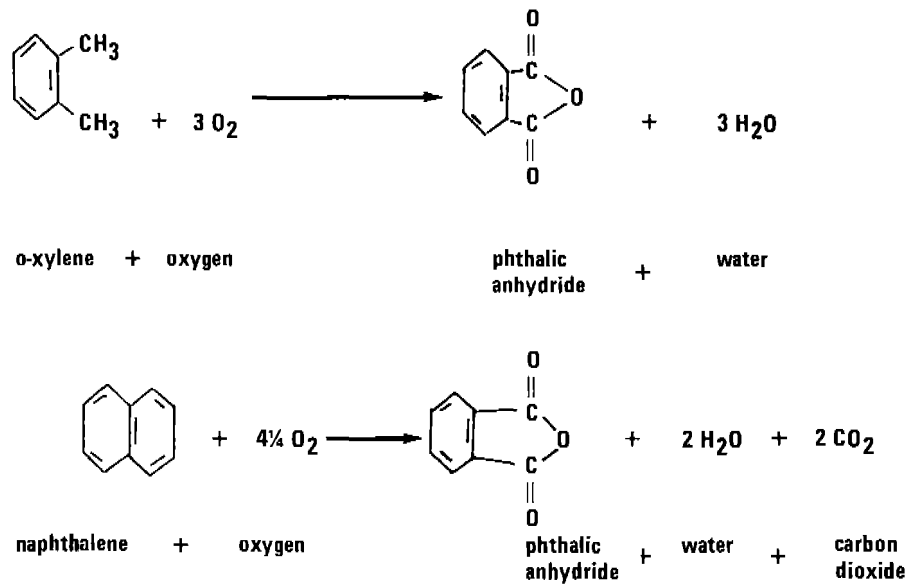

The reactor effluent containing crude PAN plus products from side reactions and excess oxygen passes to a series of switch condensers where the crude PAN cools and crystallizes. The condensers are alternately cooled and then heated, allowing PAN crystals to form and then melt from the condenser tube fins.

The crude liquid is transferred to a pretreatment section in which phthalic acid is dehydrated to anhydride. Water, maleic anhydride, and benzoic acid are partially evaporated. The liquid then goes to a vacuum distillation section where pure PAN (99.8 wt. percent pure) is recovered. The product can be stored and shipped either as a liquid or a solid (in which case it is dried, flaked, and packaged in multi-wall paper bags). Tanks for holding liquid PAN are kept at 300°F (150°C) and blanketed with dry nitrogen to prevent the entry of oxygen (fire) or water vapor (hydrolysis to phthalic acid).

Maleic anhydride is currently the only by-product being recovered.

Figures 1 and 2 show the process flow for air oxidation of o-xylene and naphthalene, respectively.

5.12.2 Emissions and Controls[1]

Emissions from o-xylene and naphthalene storage are small and presently are not controlled.

The major contributor of emissions is the reactor and condenser effluent which is vented from the condenser unit. Particulate, sulfur oxides (for o-xylene-based production), and carbon monoxide make up the emissions, with carbon monoxide comprising over half the total. The most efficient (96 percent) system of control is the combined usage of a water scrubber and thermal incinerator. A thermal incinerator alone is approximately 95 percent efficient in combustion of pollutants for o-xylene-based production, and 80 percent efficient for naphthalene-based production. Thermal incinerators with steam generation show the same efficiencies as thermal incinerators alone. Scrubbers have a 99 percent efficiency in collecting particulates, but are practically ineffective in reducing carbon monoxide emissions. In naphthalene-based production, cyclones can be used to control catalyst dust emissions with 90 to 98 percent efficiency.

Pretreatment and distillation emissions—particulates and hydrocarbons—are normally processed through the water scrubber and/or incinerator used for the main process stream (reactor and condenser) or scrubbers alone, with the same efficiency percentages applying.

Product storage in the liquid phase results in small amounts of gaseous emissions. These gas streams can either be sent to the main process vent gas control devices or first processed through sublimation boxes or devices used to recover escaped PAN. Flaking and bagging emissions are negligible, but can be sent to a cyclone for recovery of PAN dust. Exhaust from the cyclone presents no problem.

Table 5.12-1 gives emission factors for controlled and uncontrolled emissions from the production of PAN.

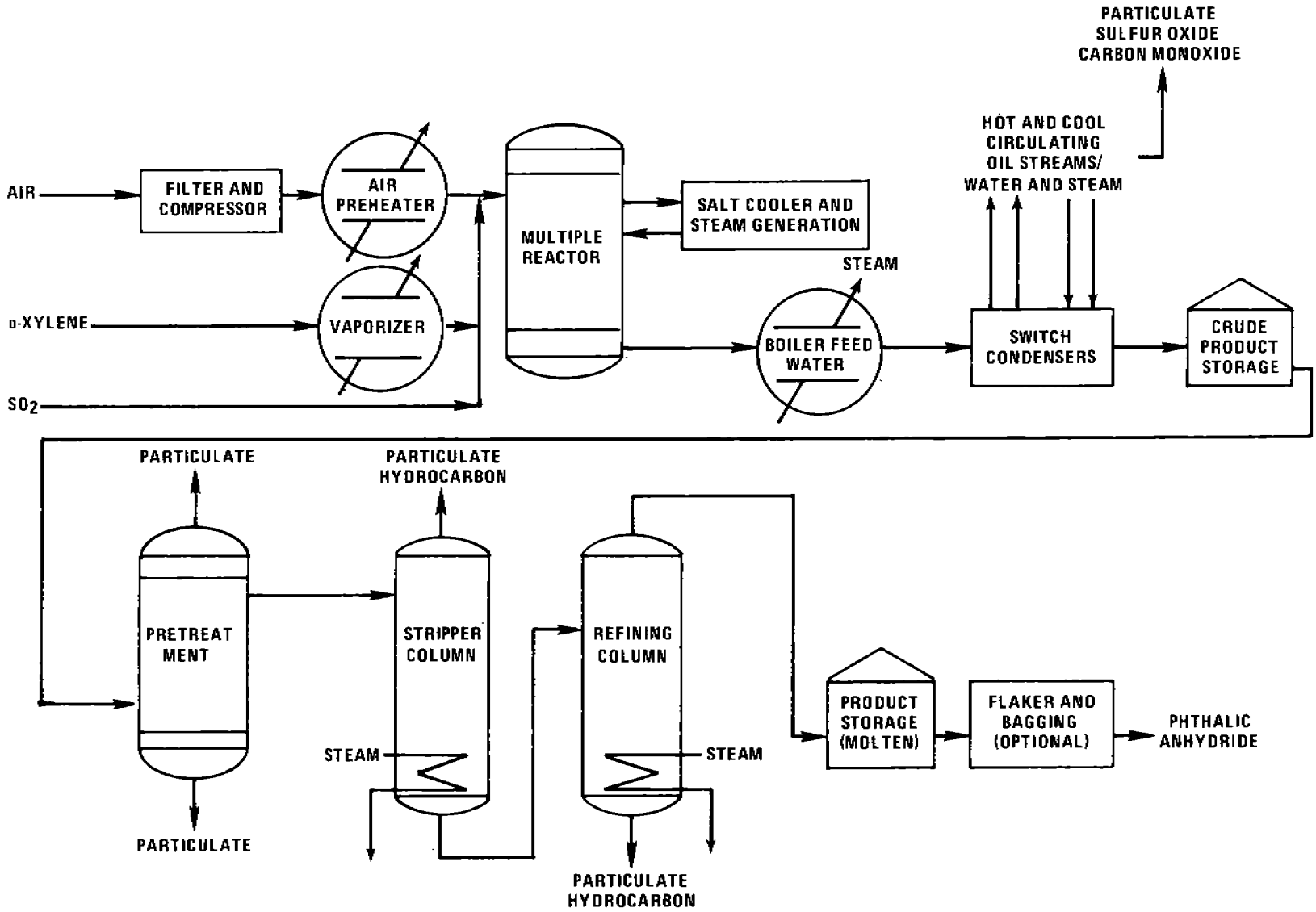

Figure 5.12-1. Flow diagram for phthalic anhydride using o-xylene as basic feedstock.[1]

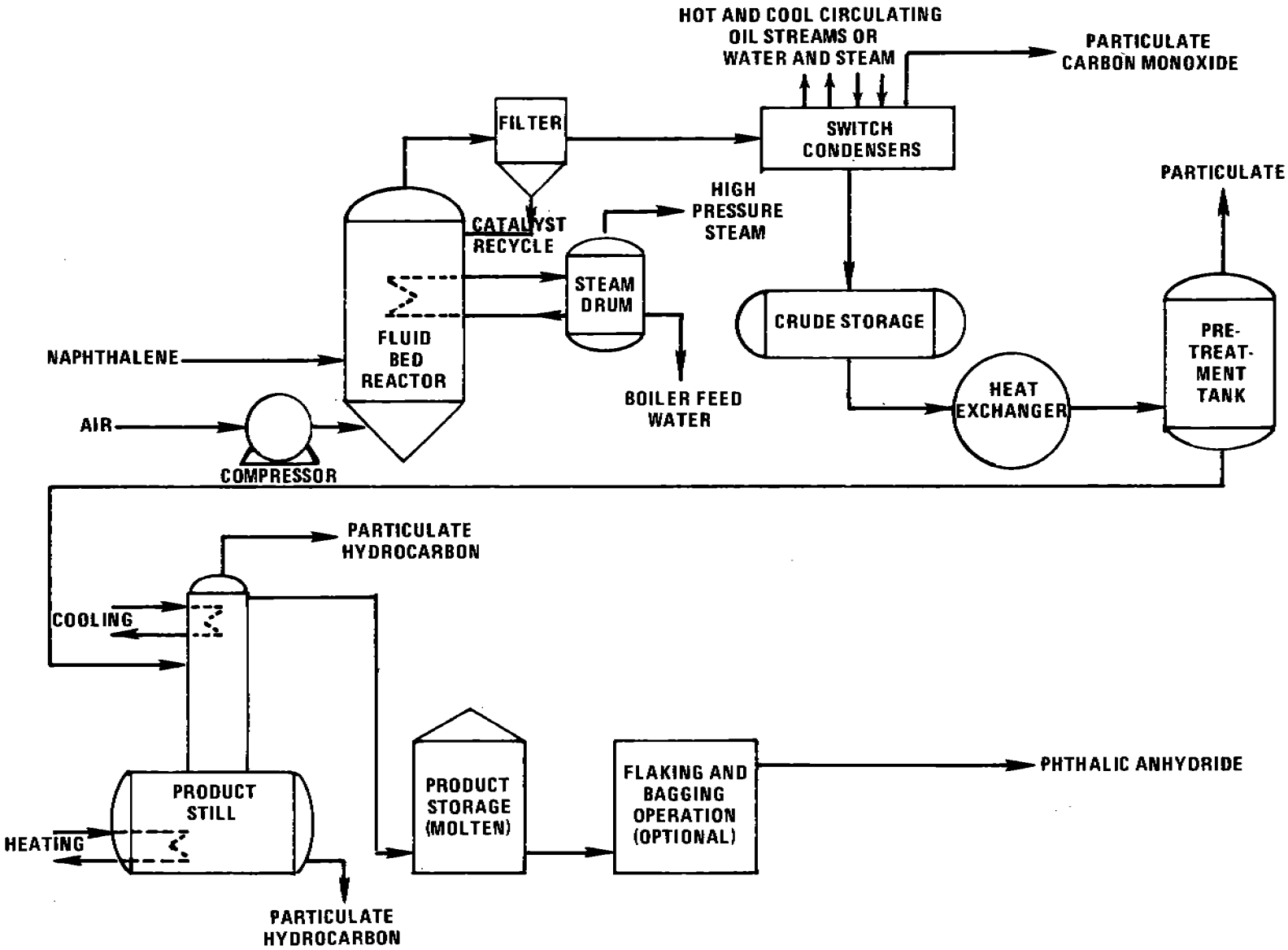

Figure 5.12-2. Flow diagram for phthalic anhydride using naphthalene as basic feedstock.[1]

TABLE 5.12-1. EMISSION FACTORS FOR PHTHALIC ANHYDRIDE[a]

EMISSION FACTOR RATING: B

	Particulate		SO_x		Nonmethane VOC[b]		CO	
Process	kg/Mg	lb/ton	kg/Mg	lb/ton	kg/Mg	lb/ton	kg/Mg	lb/ton
Oxidation of o-xylene[c]								
Main process stream[d]								
Uncontrolled	69[e]	138[e]	4.7[f]	9.4[f]	0	0	151	301
W/scrubber and thermal incinerator	3	6	4.7	9.4	0	0	6	12
W/thermal incinerator	4	7	4.7	9.4	0	0	8	15
W/incinerator with steam generator	4	7	4.7	9.4	0	0	8	15
Pretreatment								
Uncontrolled	6.4[g]	13[g]	0	0	0	0	0	0
W/scrubber and thermal incinerator	0.3	0.5	0	0	0	0	0	0
W/thermal incinerator	0.4	0.7	0	0	0	0	0	0
Distillation								
Uncontrolled	45[e]	89[e]	0	0	1.2[e,h]	2.4[e,h]	0	0
W/scrubber and thermal incinerator	2	4	0	0	<0.1	<0.1	0	0
W/thermal incinerator	2	4	0	0	<0.1	0.1	0	0
Oxidation of naphthalene[c]								
Main process stream[d]								
Uncontrolled	28[i,k]	56[i,k]	0	0	0	0	50	100
W/thermal incinerator	6	11	0	0	0	0	10	20
W/scrubber	0.3	0.6	0	0	0	0	50	100
Pretreatment								
Uncontrolled	2.5[j]	5[j]	0	0	0	0	0	0
W/thermal incinerator	0.5	1	0	0	0	0	0	0
W/scrubber	<0.1	<0.1	0	0	0	0	0	0
Distillation								
Uncontrolled	19[i]	38[i]	0	0	5[h,i]	10[h,i]	0	0
W/thermal incinerator	4	8	0	0	1	2	0	0
W/scrubber	0.2	0.4	0	0	<0.1	0.1	0	0

[a]Reference 1. Factors are in kg of pollutant/Mg (lb/ton) of phthalic anhydride produced.

[b]Emissions contain no methane.

[c]Control devices listed are those currently being used by phthalic anhydride plants.

[d]Main process stream includes reactor and multiple switch condensers as vented through condenser unit.

[e]Consists of phthalic anhydride, maleic anhydride, benzoic acid.

[f]Value shown corresponds to relatively fresh catalyst, which can change with catalyst age. Can be 9.5 - 13 kg/Mg (19 - 25 lb/ton) for aged catalyst.

[g]Consists of phthalic anhydride and maleic anhydride.

[h]Normally a vapor, but can be present as a particulate at low temperature.

[i]Consists of phthalic anhydride, maleic anhydride, naphthaquinone.

[j]Particulate is phthalic anhydride.

[k]Does not include catalyst dust, controlled by cyclones with efficiency of 90 - 98%.

Reference for Section 5.12

1. Engineering and Cost Study of Air Pollution Control for the Petrochemical Industry, Vol. 7: Phthalic Anhydride Manufacture from Ortho-xylene, EPA-450/3-73-006g, U. S. Environmental Protection Agency, Research Triangle Park, NC, July 1975.

5.13 PLASTICS

5.13.1 Process Description[1]

The manufacture of most resins or plastics begins with the polymerization or linking of the basic compound (monomer), usually a gas or liquid, into high molecular weight noncrystalline solids. The manufacture of the basic monomer is not considered part of the plastics industry and is usually accomplished at a chemical or petroleum plant.

The manufacture of most plastics involves an enclosed reaction or polymerization step, a drying step, and a final treating and forming step. These plastics are polymerized or otherwise combined in completely enclosed stainless steel or glass-lined vessels. Treatment of the resin after polmerization varies with the proposed use. Resins for moldings are dried and crushed or ground into molding powder. Resins such as the alkyd resins that are to be used for protective coatings are normally transferred to an agitated thinning tank, where they are thinned with some type of solvent and then stored in large steel tanks equipped with water-cooled condensers to prevent loss of solvent to the atmosphere. Still other resins are stored in latex form as they come from the kettle.

5.13.2 Emissions and Controls[1]

The major sources of air contamination in plastics manufacturing are the emissions of raw materials or monomers, emissions of solvents or other volatile liquids during the reaction, emissions of sublimed solids such as phthalic anhydride in alkyd production, and emissions of solvents during storage and handling of thinned resins. Emission factors for the manufacture of plastics are shown in Table 5.13-1.

Table 5.13-1. EMISSION FACTORS FOR PLASTICS MANUFACTURING WITHOUT CONTROLS[a]
EMISSION FACTOR RATING: E

Type of plastic	Particulate		Gases	
	lb/ton	kg/MT	lb/ton	kg/MT
Polyvinyl chloride	35[b]	17.5[b]	17[c]	8.5[c]
Polypropylene	3	1.5	0.7[d]	0.35[d]
General	5 to 10	2.5 to 5	–	–

[a]References 2 and 3.
[b]Usually controlled with a fabric filter efficiency of 98 to 99 percent.
[c]As vinyl chloride.
[d]As propylene.

Much of the control equipment used in this industry is a basic part of the system and serves to recover a reactant or product. These controls include floating roof tanks or vapor recovery systems on volatile material, storage units, vapor recovery systems (adsorption or condensers), purge lines that vent to a flare system, and recovery systems on vacuum exhaust lines.

References for Section 5.13

1. Air Pollutant Emission Factors. Final Report. Resources Research, Inc. Reston, Va. Prepared for National Air Pollution Control Administration, Durham, N.C., under Contract Number CPA-22-69-119. April 1970.

2. Unpublished data from industrial questionnaire. U.S. DHEW, PHS, National Air Pollution Control Administration, Division of Air Quality and Emissions Data. Durham, N.C. 1969.

3. Private Communication between Resources Research, Incorporated, and Maryland State Department of Health, Baltimore, Md. November 1969.

5.14 PRINTING INK

5.14.1 Process Description[1]

There are four major classes of printing ink: letterpress and lithographic inks, commonly called oil or paste inks; and flexographic and rotogravure inks, which are referred to as solvent inks. These inks vary considerably in physical appearance, composition, method of application, and drying mechanism. Flexographic and rotogravure inks have many elements in common with the paste inks but differ in that they are of very low viscosity, and they almost always dry by evaporation of highly volatile solvents.[2]

There are three general processes in the manufacture of printing inks: (1) cooking the vehicle and adding dyes, (2) grinding of a pigment into the vehicle using a roller mill, and (3) replacing water in the wet pigment pulp by an ink vehicle (commonly known as the flushing process).[3] The ink "varnish" or vehicle is generally cooked in large kettles at 200° to 600°F (93° to 315°C) for an average of 8 to 12 hours in much the same way that regular varnish is made. Mixing of the pigment and vehicle is done in dough mixers or in large agitated tanks. Grinding is most often carried out in three-roller or five-roller horizontal or vertical mills.

5.14.2 Emissions and Controls[1,4]

Varnish or vehicle preparation by heating is by far the largest source of ink manufacturing emissions. Cooling the varnish components – resins, drying oils, petroleum oils, and solvents – produces odorous emissions. At about 350°F (175°C) the products begin to decompose, resulting in the emission of decomposition products from the cooking vessel. Emissions continue throughout the cooking process with the maximum rate of emissions occuring just after the maximum temperature has been reached. Emissions from the cooking phase can be reduced by more than 90 percent with the use of scrubbers or condensers followed by afterburners.[4,5]

Compounds emitted from the cooking of oleoresinous varnish (resin plus varnish) include water vapor, fatty acids, glycerine, acrolein, phenols, aldehydes, ketones, terpene oils, terpenes, and carbon dioxide. Emissions of thinning solvents used in flexographic and rotogravure inks may also occur.

The quantity, composition, and rate of emissions from ink manufacturing depend upon the cooking temperature and time, the ingredients, the method of introducing additives, the degree of stirring, and the extent of air or inert gas blowing. Particulate emissions resulting from the addition of pigments to the vehicle are affected by the type of pigment and its particle size. Emission factors for the manufacture of printing ink are presented in Table 5.14-1.

TABLE 5.14-1. EMISSION FACTORS FOR PRINTING INK MANUFACTURING[a]

EMISSION FACTOR RATING: E

Type of process	Nonmethane volatile organic compounds[b] kg/Mg of product	Nonmethane volatile organic compounds[b] lb/ton of product	Particulates kg/Mg of pigment	Particulates lb/ton of pigment
Vehicle cooking				
General	60	120	NA	NA
Oils	20	40	NA	NA
Oleoresinous	75	150	NA	NA
Alkyds	80	160	NA	NA
Pigment mixing	NA	NA	1	2

[a]Based on data from Section 5.10, Paint and Varnish. NA = not applicable.

[b]The nonmethane VOC emissions are a mix of volatilized vehicle components, cooking decomposition products and ink solvent.

References for Section 5.14

1. Air Pollutant Emission Factors, APTD-0923, U. S. Environmental Protection Agency, Research Triangle Park, NC, April 1970.

2. R. N. Shreve, Chemical Process Industries, 3rd Ed., New York, McGraw Hill Book Co., 1967.

3. L. M. Larsen, Industrial Printing Inks, New York, Reinhold Publishing Company, 1962.

4. Air Pollution Engineering Manual, 2nd Edition, AP-40, U. S. Environmental Protection Agency, Research Triangle Park, NC, May 1973.

5. Private communication with Ink Division of Interchemical Corporation, Cincinnati, Ohio, November 10, 1969.

5.15 SOAP AND DETERGENTS

5.15.1 Soap Manufacture

Process Description[1,7] - Soap may be manufactured by either a batch or continuous process, using either the alkaline saponification of natural fats and oils or the direct saponification of fatty acids. The kettle, or full boiled, process is a batch process of several steps in either a single kettle or a series of kettles. Fats and oils are saponified by live steam boiling in a caustic solution, followed by "graining", or precipitating, the soft curds of soap out of the aqueous lye solution by adding sodium chloride (salt). The soap solution then is washed to remove glycerine and color body impurities, to leave the "neat" soap to form during a settling period. Continuous alkaline saponification of natural fats and oils follows the same steps as batch processing, but it eliminates the need for a lengthy process time. Direct saponification of fatty acids is also accomplished in continuous processes. Fatty acids obtained by continuous hydrolysis usually are continuously neutralized with caustic soda in a high speed mixer/neutralizer to form soap.

All soap is finished for consumer use in such various forms as liquid, powder, granule, chip, flake or bar.

Emissions and Controls[7] - The main atmospheric pollution problem in the manufacture of soap is odor. Vent lines, vacuum exhausts, product and raw material storage, and waste streams are all potential odor sources. Control of these odors may be achieved by scrubbing all exhaust fumes and, if necessary, incinerating the remaining compounds. Odors emanating from the spray drier may be controlled by scrubbing with an acid solution.

Blending, mixing, drying, packaging and other physical operations are subject to dust emissions. The production of soap powder by spray drying is the largest single source of dust in the manufacture of soap. Dust emissions from finishing operations other than spray drying can be controlled by dry filters and baghouses. The large size of the particulates in soap drying means that high efficiency cyclones installed in series can be satisfactory in controlling emissions.

5.15.2 Detergent Manufacture

Process Description[1,7-8] - The manufacture of spray dried detergent has three main processing steps, slurry preparation, spray drying and granule handling. Figure 5.15-1 illustrates the various operations. Detergent slurry is produced by blending liquid surfactant with powdered and liquid materials (builders and other additives) in a closed mixing tank called a crutcher. Liquid surfactant used in making the detergent slurry is produced by the sulfonation or sulfation by sulfuric acid of a linear alkylate or a fatty acid, which is then neutralized with caustic solution (NaOH). The blended slurry is held in a surge vessel for continuous pumping to the spray dryer. The slurry is sprayed at high pressure through nozzles into a vertical drying tower having a stream of hot air of from 315° to 400°C (600° to 750°F). Most towers designed for detergent production are countercurrent, with slurry introduced at the top and heated

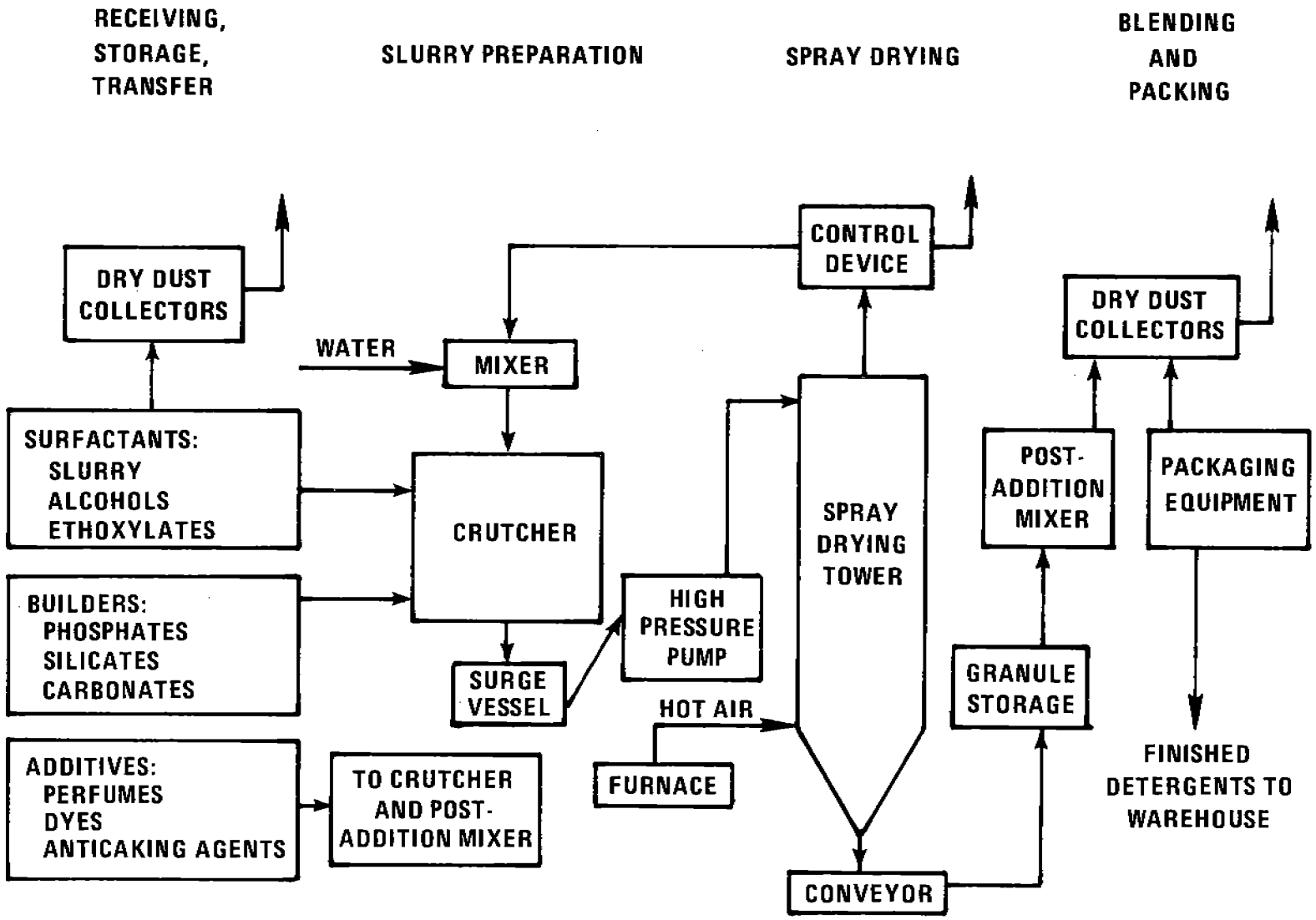

Figure 5.15-1. Manufacture of spray dried detergents.

air introduced at the bottom. A few towers are concurrent and have both hot air and slurry introduced at the top. The detergent granules are mechanically or air conveyed from the tower to a mixer to incorporate additional dry or liquid ingredients and finally sent to packaging and storage.

Emissions and Controls[7-8] - In the batching and mixing of fine dry ingredients to form slurry, dust emissions are generated at scale hoppers, mixers and the crutcher. Baghouses and/or fabric filters are used not only to reduce or to eliminate the dust emissions but to recover raw materials. The spray drying operation is the major source of particulate emissions from detergent manufacturing. Particulate emissions from spray drying operations are shown in Table 5.15-1. There is also a minor source of volatile organics when the product being sprayed contains organic materials with low vapor pressures. These vaporized organic materials condense in the tower exhaust air stream into droplets or particles. Dry cyclones and cyclonic impingement scrubbers are the primary collection equipment employed to capture the detergent dust in the spray dryer exhaust for return to process. Dry cyclones are used in parallel or in series, to collect particulate (detergent dust) and to recycle the dry product back to the crutcher. Cyclonic impinged scrubbers are used in parallel to collect the particulate in a scrubbing slurry which is recycled back to the crutcher. Secondary collection equipment is used to collect the fine particulates that have escaped from the primary devices. Cyclonic impingement scrubbers are often followed by mist eliminators, and dry cyclones are followed by fabric filters or scrubber/electrostatic precipitator units. Conveying, mixing and packaging of detergent granules can cause dust emissions. Usually baghouses and/or fabric filters provide the best control.

TABLE 5.15-1. PARTICULATE EMISSION FACTORS FOR SPRAY DRYING DETERGENTS[a]

EMISSION FACTOR RATING: B

Control Device	Overall Efficiency, %	Particulate Emissions kg/Mg of product	Particulate Emissions lb/ton of product
Uncontrolled	-	45	90
Cyclone[b]	85	7	14
Cyclone			
w/Spray chamber	92	3.5	7
w/Packed scrubber	95	2.5	5
w/Venturi scrubber	97	1.5	3

[a]References 2-6. Emissions data for volatile organic compounds has not been reported in the literature.
[b]Some type of primary collector, such as a cyclone, is considered an integral part of the spray drying system.

References for Section 5.15

1. Air Pollutant Emission Factors, APTD-0923, U. S. Environmental Protection Agency, Research Triangle Park, NC, April 1970.

2. A. H. Phelps, "Air Pollution Aspects of Soap and Detergent Manufacture", Journal of the Air Pollution Control Association, 17(8):505-507, August 1967.

3. R. N. Shreve, Chemical Process Industries, Third Edition, New York, McGraw-Hill Book Company, 1967.

4. G. P. Larsen, et al., "Evaluating Sources of Air Pollution", Industrial and Engineering Chemistry, 45:1070-1074, May 1953.

5. P. Y. McCormick, et al., "Gas-solid Systems", Chemical Engineer's Handbook, J. H. Perry (ed.), New York, McGraw-Hill Book Company, 1963.

6. Communication with Maryland State Department of Health, Baltimore, MD, November 1969.

7. J. A. Danielson, Air Pollution Engineering Manual, AP-40, U. S. Environmental Protection Agency, May 1973.

8. Source Category Survey: Detergent Industry, EPA-450/3-80-030, U. S. Environmental Protection Agency, Research Triangle Park, NC, June 1980.

5.16 SODIUM CARBONATE

5.16.1 General[1,2]

Processes used to produce sodium carbonate (Na_2CO_3), or soda ash, are classified as either natural or synthetic. Natural processes recover sodium carbonate from naturally occurring deposits of trona ore (sodium sesquicarbonate) or from brine containing sodium sesquicarbonate and sodium carbonate. The synthetic process (Solvay process) produces sodium carbonate by reacting ammoniated sodium chloride with carbon dioxide. For about a century, almost all sodium carbonate production was by the Solvay process. However, since the mid-1960s, Solvay process production has declined substantially, and natural production has grown by 500 percent. Only one plant in the U.S. now uses the Solvay process. Available data on emissions from the Solvay process are also presented, but because the natural processes are more prevalent in this country, this discussion will focus on emissions from the natural processes.

Three different natural processes are currently in use. These are the monohydrate, sesquicarbonate and direct carbonation processes. The sesquicarbonate process was the first natural process used, but it is used at only one plant and is not expected to be used at future plants. And since data on uncontrolled emissions from this process are not available, emissions from the sesquicarbonate process are not discussed. The monohydrate and direct carbonation processes and emissions are described below, the differences in these two processes being in raw materials processing.

In the monohydrate process, sodium carbonate is produced from trona ore, which consists of 86 to 95 percent sodium sesquicarbonate ($Na_2CO_3 \cdot NaHCO_3 \cdot 2H_2O$), 5 to 12 percent gangues (clays and other insoluble impurities) and water. The mined trona ore is crushed and screened and calcined to drive off carbon dioxide and water, forming crude sodium carbonate. Rotary gas fired calciners currently are most commonly used, but the newest plants use coal fired calciners, and future plants are also likely to use coal fired calciners because of the economics and the limited availability of natural gas.

The crude sodium carbonate is dissolved and separated from the insoluble impurities. Sodium carbonate monohydrate ($Na_2CO_3 \cdot H_2O$) is crystallized from the purified liquid by multiple effect evaporators. The sodium carbonate monohydrate is then dried, to remove the free and bound water and to produce the final product. Rotary steam tube, fluid bed steam tube, and rotary gas fired dryers are used, with steam tube dryers more likely in future plants.

In the direct carbonation process, sodium carbonate is produced from brine containing sodium sesquicarbonate, sodium carbonate and other salts. The brine is prepared by pumping liquor into salt deposits, where the salts

are dissolved into a liquor. The recovered brine is carbonated by contact with carbon dioxide to convert all of the sodium carbonate that is present to sodium bicarbonate. The sodium bicarbonate is then recovered from the brine by vacuum crystallizers. The crystal slurry is filtered, and the crystals enter steam heated predryers to evaporate some of the moisture. The partially dried sodium bicarbonate goes to a steam heated calciner where carbon dioxide and the remaining water are driven off, forming impure sodium carbonate. The carbon dioxide evolved is recycled to the brine carbonators. The impure sodium carbonate is bleached with sodium nitrate in a gas fired rotary bleacher to remove discoloring impurities. The bleached sodium carbonate is then dissolved and recrystallized. The resulting crystals of sodium carbonate monohydrate are dried, as in the monohydrate process.

In the Solvay process, ammonia, calcium carbonate (limestone), coal and sodium chloride (brine) are the basic raw materials. The brine is purified in a series of reactors and clarifiers by precipitating the magnesium and calcium ions with soda ash and sodium hydroxide. Sodium bicarbonate is formed by carbonating a solution of ammonia and purified brine which is fed to either steam or gas rotary dryers where it is converted (calcined) to sodium carbonate.

5.16.2 Emissions and Controls

The principal emission points in the monohydrate and direct carbonation processes are shown in Figures 5.16-1 and 5.16-2. The major emission sources in the monohydrate process are calciners and dryers, and the major sources in the direct carbonation process are bleachers, dryers and predryers. Emission factors for the emission sources are presented in Table 5.16-1, and emission factors for the Solvay process are presented in Table 5.16-2.

In addition to the major emission points, emissions may also arise from crushing and dissolving operations, elevators, conveyor transfer points, product loading and storage piles. Emissions from these sources have not been quantified.

Particulate matter is the only pollutant of concern from sodium carbonate plants. Emissions of sulfur dioxide (SO_2) arise from calciners fired with coal, but reaction of the evolved SO_2 with the sodium carbonate in the calciner keeps SO_2 emissions low. Small amounts of volatile organic compounds (VOC) may also be emitted from calciners, possibly from oil shale associated with the trona ore, but these emissions have not been quantified.

The particulate matter emission rates from calciners, dryers, predryers and bleachers are affected by the gas velocity through the unit and by the particle size distribution of the feed material. The latter affects the emission rate because small particles are more easily entrained in a moving stream of gas than are large particles. Gas velocity through the unit affects the degree of turbulence and agitation. As the gas velocity increases, so does the rate of increase in total particulate matter emissions. Thus, coal fired calciners may have higher particulate emission factors than gas fired calciners because they have higher gas flow rates. The additional particulate emissions contributed by the coal fly ash represent less than one percent of total particulate emissions, and the emission

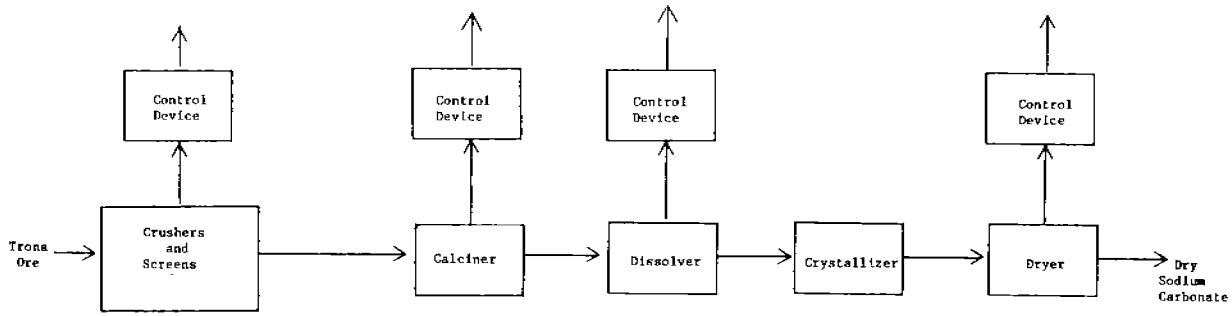

Figure 5.16-1. Sodium carbonate production by monohydrate process.

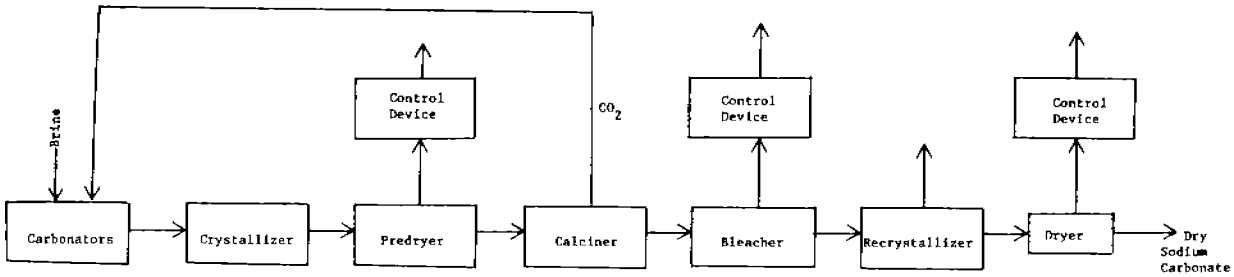

Figure 5.16-2. Sodium carbonate production by direct carbonation process.

TABLE 5.16-1. UNCONTROLLED EMISSION FACTORS FOR NATURAL PROCESS SODIUM CARBONATE PLANTS[a]

EMISSION FACTOR RATING: B

Source	Particulate emissions	
	kg/Mg	lb/ton
Gas fired calciner[b]	184.0	368.0
Coal fired calciner[b]	195.0	390.0
Rotary steam tube dryer[c]	33.0	67.0
Fluid bed steam tube dryer[c]	73.0	146.0
Rotary steam heater predryer[d]	1.0	3.1
Rotary gas fired bleacher[e]	155.0	311.0

[a]References 3-5. Values are averages of 2 - 3 test runs.
[b]Factor is in kg/Mg (lb/ton) of ore fed to calciner. Includes particulate emissions from coal fly ash. These represent < 1% of the total emissions. Emissions of SO_2 from the coal are roughly 0.0007 kg/Mg (0.014 lb/ton) of ore feed.
[c]Factor is in kg/Mg (lb/ton) of dry product from dryer.
[d]Factor is in kg/Mg (lb/ton) of dry $NaHCO_3$ feed.
[e]Factor is in kg/Mg (lb/ton) of dry feed to bleacher.

TABLE 5.16-2. UNCONTROLLED EMISSION FACTORS FOR A SYNTHETIC SODA ASH (SOLVAY) PLANT[a]

EMISSION FACTOR RATING: D

Emissions	kg/Mg	lb/ton
Ammonia losses[b]	2	4
Particulate[c]	25	50

[a]Reference 6.
[b]Calculated by subtracting measured ammonia effluent discharges from ammonia purchases.
[c]Maximum uncontrolled emissions, from New York State process certificates to operate. Does not include emissions from fugitive or external combustion sources.

factor for coal fired calciners is about 6 percent higher than that for gas fired calciners. Fluid bed steam tube dryers have higher gas flow rates and particulate emission factors than do rotary steam tube dryers. No data on uncontrolled particulate emissions from gas fired dryers are available, but these dryers also have higher gas flow rates than do rotary steam tube dryers and would probably have higher particulate emission factors.

The particulate emission factors presented in Table 5.16-1 represent emissions measured at the inlet to the control devices. However, even in the absence of air pollution regulations requiring emission control, these emissions should be controlled to some degree to prevent excessive loss of product. Because the level of control needed for product recovery is difficult to define, the emission factors do not account for this recovery.

Cyclones in series with electrostatic precipitators (ESP) are most commonly used to control particulate emissions from calciners and bleachers. Venturi scrubbers are also used, but they are not as effective. Cyclone/ESP combinations have achieved removal efficiencies ranging from 99.5 to 99.96 percent for new coal fired calciners, and 99.99 percent for bleachers. Comparable efficiencies should be possible for new gas fired calciners. Venturi scrubbers are most commonly used to control emissions from dryers and predryers, because of the high moisture content of the exit gas. Cyclones are used in series with the scrubbers for predryers and fluid bed steam tube dryers. Removal efficiencies averaging 99.88 percent have been achieved for venturi scrubbers on rotary steam tube dryers at a pressure drop of 6.2 kPa (25 inches water), and acceptable collection efficiences may be achieved with lower pressure drops. Efficiencies of 99.9 percent have been achieved for a cyclone/venturi scrubber on a fluid bed steam tube dryer at a pressure drop of 9.5 kPa (38 inches water). Efficiencies over 98 percent have been achieved for a cyclone/venturi scrubber on a predryer.

Fugitive emissions originating from limestone handling/processing operations, product drying operations and dry solids handling (conveyance and bulk loading) are a significant source of emissions from the manufacture of soda ash by the Solvay process. These fugitive emissions have not been quantified. Ammonia losses also occur because of leaks at pipe fittings, gasket flanges, pump packing glands, discharges of absorber exhaust, and exposed bicarbonate cake on filter wheels and on feed floor prior to calcifying.

References for Section 5.16

1. Sodium Carbonate Industry - Background Information for Proposed Standards, EPA-450/3-80-029a, U. S. Environmental Protection Agency, Research Triangle Park, NC, August 1980.

2. Air Pollutant Emission Factors, Final Report, HEW Contract Number CPA-22-69-119, Resources Research, Inc., Reston, VA, April 1970.

3. Sodium Carbonate Manufacturing Plant, EPA-79-SOD-1, U. S. Environmental Protection Agency, Research Triangle Park, NC, August 1979.

4. Sodium Carbonate Manufacturing Plant, EPA-79-SOD-2, U. S. Environmental Protection Agency, Research Triangle Park, NC, March 1980.

5. Particulate Emissions from the Kerr-McGee Chemical Corporation Sodium Carbonate Plant, EPA-79-SOD-3, U. S. Environmental Protection Agency, Research Triangle Park, NC, March 1980.

6. Written communication from W. S. Turetsky, Allied chemical Company, Morristown, NJ, to Frank Noonan, U.S. Environmental Protection Agency, Research Triangle Park, NC, June 17, 1982.

5.17 SULFURIC ACID

5.17.1 General

All sulfuric acid is made by either the lead chamber process or the contact process. Because the contact process accounts for more than 97 percent of the total sulfuric acid production in the United States, it is the only process discussed in this Section. Contact plants are generally classified according to the raw materials charged to them - (1) elemental sulfur burning, (2) spent acid and hydrogen sulfide burning, and (3) sulfide ores and smelter gas burning. The contributions from these plants to the total acid production are 68, 18.5 and 13.5 percent respectively.

All contact processes incorporate three basic operations, each of which corresponds to a distinct chemical reaction. First, the sulfur in the feedstock is burned to sulfur dioxide:

$$\underset{\text{Sulfur}}{S} + \underset{\text{Oxygen}}{O_2} \longrightarrow \underset{\text{Sulfur dioxide}}{SO_2} \qquad (1)$$

Then, the sulfur dioxide is catalytically oxidized to sulfur trioxide:

$$\underset{\text{Sulfur dioxide}}{2SO_2} + \underset{\text{Oxygen}}{O_2} \longrightarrow \underset{\text{Sulfur trioxide}}{2SO_3} \qquad (2)$$

Finally, the sulfur trioxide is absorbed in a strong aqueous solution of sulfuric acid:

$$\underset{\text{Sulfur trioxide}}{SO_3} + \underset{\text{Water}}{H_2O} \longrightarrow \underset{\text{Sulfuric acid}}{H_2SO_4} \qquad (3)$$

Elemental Sulfur Burning Plants[1,2] - Elemental sulfur, such as Frasch process sulfur from oil refineries, is melted, settled or filtered to remove ash and is fed into a combustion chamber. The sulfur is burned in clean air that has been dried by scrubbing with 93 - 99 percent sulfuric acid. The gases from the combustion chamber cool and then enter the solid catalyst (vanadium pentoxide) converter. Usually, 95 - 98 percent of the sulfur dioxide from the combustion chamber is converted to sulfur trioxide, with an accompanying large evolution of heat. After being cooled, the converter exit gas enters an absorption tower, where the sulfur trioxide is absorbed with 98 - 99 percent sulfuric acid. The sulfur trioxide combines with the water in the acid and forms more sulfuric acid.

If oleum, a solution of uncombined SO_3 in H_2SO_4, is produced, SO_3 from the converter is first passed to an oleum tower that is fed with 98 percent acid from the absorption system. The gases

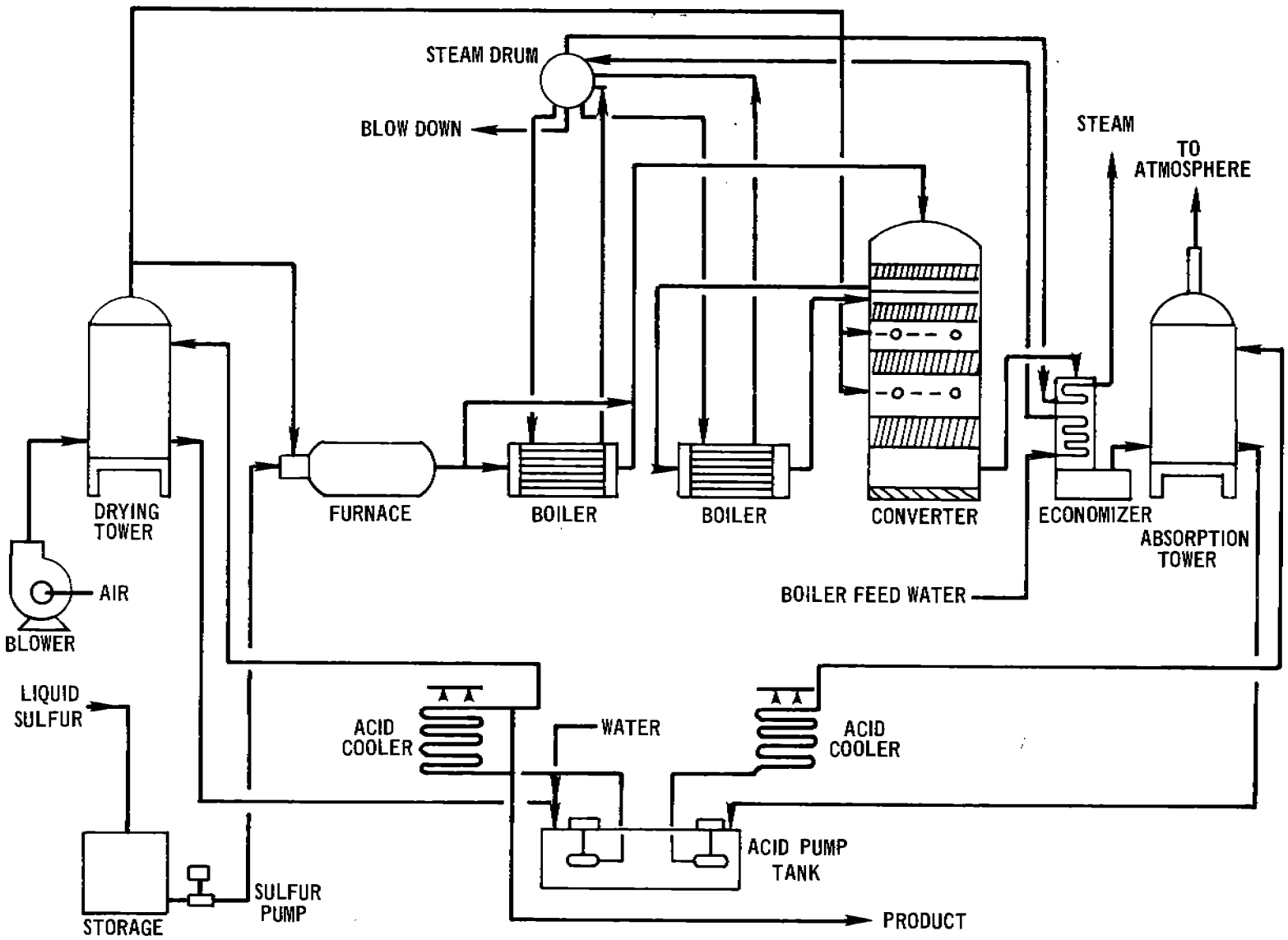

Figure 5.17-1. Basic flow diagram of contact process sulfuric acid plant burning elemental sulfur.

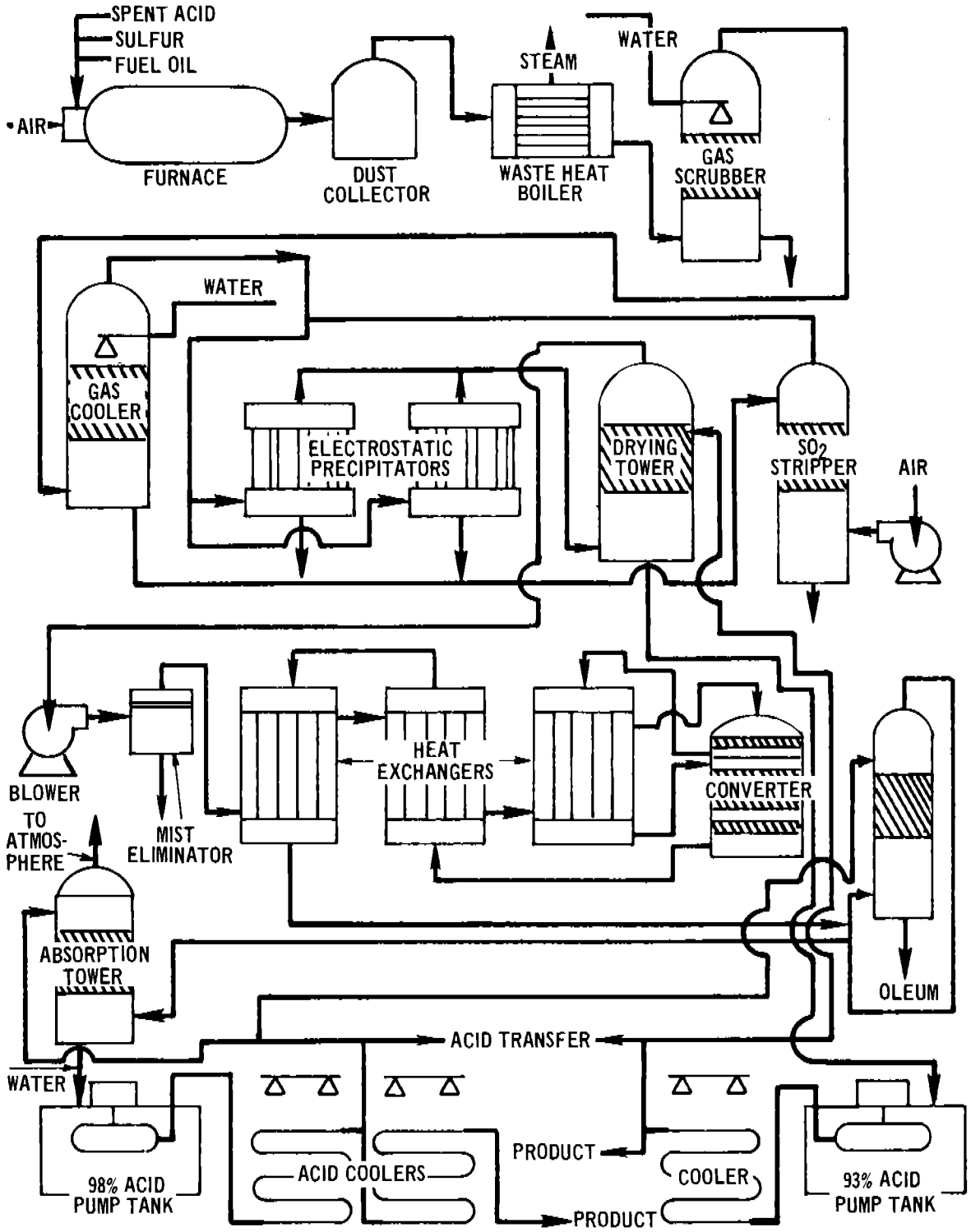

Figure 5.17-2. Basic flow diagram of contact process sulfuric acid plant burning spent acid.

from the oleum tower are then pumped to the absorption column where the residual sulfur trioxide is removed.

A schematic diagram of a contact process sulfuric acid plant that burns elemental sulfur is shown in Figure 5.17-1.

Spent Acid and Hydrogen Sulfide Burning Plants[1,2] - Two types of plants are used to process this type of sulfuric acid. In one, the sulfur dioxide and other combustion products from the combustion of spent acid and/or hydrogen sulfide with undried atmospheric air are passed through gas cleaning and mist removal equipment. The gas stream next passes through a drying tower. A blower draws the gas from the drying tower and discharges the sulfur dioxide gas to the sulfur trioxide converter. A schematic diagram of a contact process sulfuric acid plant that burns spent acid is shown in Figure 5.17-2.

In a "wet gas plant", the wet gases from the combustion chamber are charged directly to the converter with no intermediate treatment. The gas from the converter flows to the absorber, through which 93 - 98 percent sulfuric acid is circulating.

Sulfide Ores and Smelter Gas Plants - The configuration of this type of plant is essentially the same as that of a spent acid plant (Figure 5.17-2), with the primary exception that a roaster is used in place of the combustion furnace.

The feed used in these plants is smelter gas, available from such equipment as copper converters, reverberatory furnaces, roasters and flash smelters. The sulfur dioxide in the gas is contaminated with dust, acid mist and gaseous impurities. To remove the impurities, the gases must be cooled and passed through purification equipment consisting of cyclone dust collectors, electrostatic dust and mist precipitators, and scrubbing and gas cooling towers. After the gases are cleaned and the excess water vapor is removed, they are scrubbed with 98 percent acid in a drying tower. Beginning with the drying tower stage, these plants are nearly identical to the elemental sulfur plants shown in Figure 5.17-1.

5.17.2 Emissions and Controls

Sulfur Dioxide[1-3] - Nearly all sulfur dioxide emissions from sulfuric acid plants are found in the exit gases. Extensive testing has shown that the mass of these SO_2 emissions is an inverse function of the sulfur conversion efficiency (SO_2 oxidized to SO_3). This conversion is always incomplete, and is affected by the number of stages in the catalytic converter, the amount of catalyst used, temperature and pressure, and the concentrations of the reactants (sulfur dioxide and oxygen). For example, if the inlet SO_2 concentration to the converter were 8 percent by volume (a representative value), and the conversion temperature were 473°C (883°F), the conversion efficiency would be 96 percent. At this conversion, the

uncontrolled emission factor for SO_2 would be 27.5 kg/Mg (55 pounds per ton) of 100 percent sulfuric acid produced, as shown in Table 5.17-1. For purposes of comparison, note that the Environmental Protection Agency performance standard for new and modified plants is 2 kg/Mg (4 pounds per ton) of 100 percent acid produced, maximum 2 hour average.[3] As Table 5.17-1 and Figure 5.17-3 indicate, achieving this standard requires a conversion efficiency of 99.7 percent in an uncontrolled plant or the equivalent SO_2 collection mechanism in a controlled facility. Most single absorption plants have SO_2 conversion efficiencies ranging from 95 - 98 percent.

In addition to exit gases, small quantities of sulfur oxides are emitted from storage tank vents and tank car and tank truck vents during loading operations, from sulfuric acid concentrators, and through leaks in process equipment. Few data are available on the quantity of emissions from these sources.

Of the many chemical and physical means for removing SO_2 from gas streams, only the dual absorption and the sodium sulfite/bisulfite scrubbing processes have been found to increase acid production without yielding unwanted byproducts.

TABLE 5.17-1. EMISSION FACTORS FOR SULFURIC ACID PLANTS[a]

EMISSION FACTOR RATING: A

Conversion of SO_2 to SO_3 (%)	SO_2 Emissions kg/Mg of 100% H_2SO_4	SO_2 Emissions lb/ton of 100% H_2SO_4
93	48.0	96
94	41.0	82
95	35.0	70
96	27.5	55
97	20.0	40
98	13.0	26
99	7.0	14
99.5	3.5	7
99.7	2.0	4
100	0.0	0

[a]Reference 1.
[b]This linear interpolation formula can be used for calculating emission factors for conversion efficiencies between 93 and 100%: emission factor = -13.65 (% conversion efficiency) + 1365.

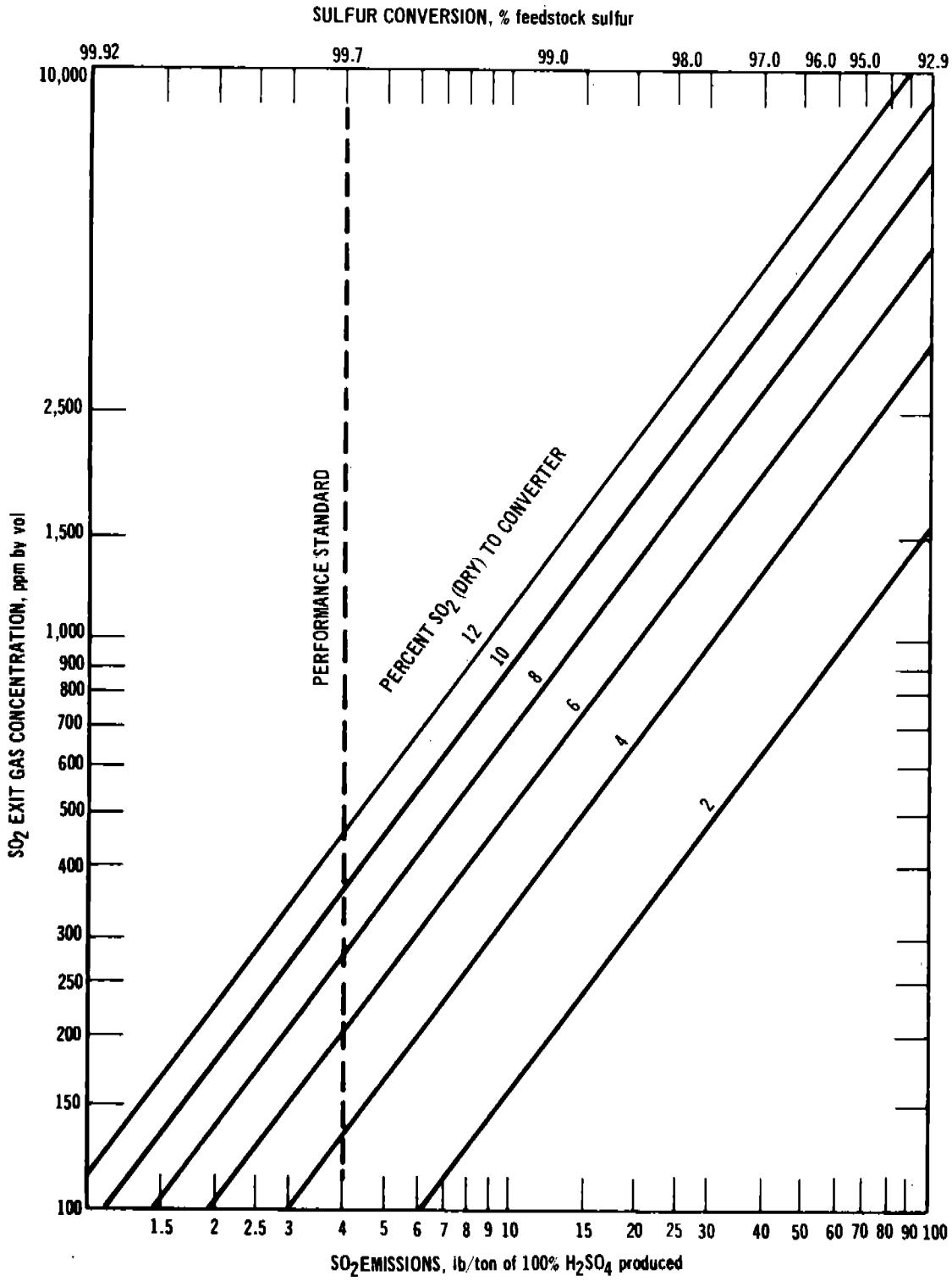

Figure 5.17-3. Sulfuric acid plant feedstock sulfur conversion versus volumetric and mass SO_2 emissions at various inlet SO_2 concentrations by volume.

In the dual absorption process, the SO_3 gas formed in the primary converter stages is sent to a primary absorption tower where most of the SO_3 is removed to form H_2SO_4. The remaining unconverted sulfur dioxide is forwarded to the final stages in the converter to remove much of the remaining SO_2 by oxidation to SO_3, from whence it is sent to the secondary absorber for final sulfur trioxide removal. The result is the conversion of a much higher fraction of SO_2 to SO_3 (a conversion of 99.7 percent or higher, on the average, which meets the performance standard). Furthermore, dual absorption permits higher converter inlet sulfur dioxide concentrations than are used in single absorption plants, because the secondary conversion stages effectively remove any residual sulfur dioxide from the primary absorber.

Where dual absorption reduces sulfur dioxide emissions by increasing the overall conversion efficiency, the sodium sulfite/bisulfite scrubbing process removes sulfur dioxide directly from the absorber exit gases. In one version of this process, the sulfer dioxide in the waste gas is absorbed in a sodium sulfite solution, is separated, and is recycled to the plant. Test results from a 680 Mg (750 ton per day) plant equipped with a sulfite scrubbing system indicated an average SO_2 emission factor of 1.35 kg/Mg (2.7 pounds per ton) of 100 percent acid.

Acid Mist[1-3] - Nearly all the acid mist emitted from sulfuric acid manufacturing can be traced to the absorber exit gases. Acid mist is created when sulfur trioxide combines with water vapor at a temperature below the dew point of sulfur trioxide. Once formed within the process system, this mist is so stable that only a small quantity can be removed in the absorber.

In general, the quantity and particle size distribution of acid mist are dependent on the type of sulfur feedstock used, the strength of acid produced, and the conditions in the absorber. Because it contains virtually no water vapor, bright elemental sulfur produces little acid mist when burned. However, the hydrocarbon impurities in other feedstocks - dark sulfur, spent acid and hydrogen sulfide - oxidize to water vapor during combustion. The water vapor, in turn, combines with sulfur trioxide as the gas cools in the system.

The strength of acid produced - whether oleum or 99 percent sulfuric acid - also affects mist emissions. Oleum plants produce greater quantities of finer more stable mist. For example, uncontrolled mist emissions from oleum plants burning spent acid range from 0.5 to 5.0 kg/Mg (1.0 to 10.0 pounds per ton), while those from 98 percent acid plants burning elemental sulfur range from 0.2 to 2.0 kg/Mg (0.4 to 4.0 pounds per ton). Furthermore, 85 - 95 weight percent of the mist particles from oleum plants are less than 2 microns in diameter, compared with only 30 weight percent that are less than 2 microns in diameter from 98 percent acid plants.

The operating temperature of the absorption column directly affects sulfur trioxide absorption and, accordingly, the quality of acid mist formed after exit gases leave the stack. The optimum absorber operating temperature depends on the strength of the acid produced, throughput rates, inlet sulfur trioxide concentrations, and other variables peculiar to each individual plant. Finally, it should be emphasized that the percentage conversion of sulfur trioxide has no direct effect on acid mist emissions. In Table 5.17-2, uncontrolled acid mist emissions are presented for various sulfuric acid plants.

TABLE 5.17-2. ACID MIST EMISSION FACTORS FOR SULFURIC ACID PLANTS WITHOUT CONTROLS[a]

EMISSIONS FACTOR RATING: B

Raw material	Oleum produced, % total output	Emissions[b]	
		kg/Mg acid	lb/ton acid
Recovered sulfur	0 to 43	0.175 - 0.4	0.35 - 0.8
Bright virgin sulfur	0	0.85	1.7
Dark virgin sulfur	33 to 100	0.16 - 3.15	0.32 - 6.3
Sulfide ores	0 to 25	0.6 - 3.7	1.2 - 7.4
Spent acid	0 to 77	1.1 - 1.2	2.2 - 2.4

[a]Reference 1.
[b]Emissions are proportional to the percentage of oleum in the total product. Use low end of ranges for low oleum percentage and high end of ranges for high oleum percentage.

Two basic types of devices, electrostatic precipitators and fiber mist eliminators, effectively reduce the acid mist concentration from contact plants to less than the EPA New Source Performance Standard, which is 0.075 kg/Mg (0.15 pound per ton) of acid. Precipitators, if properly maintained, are effective in collecting the mist particles at efficiencies up to 99 percent (see Table 5.17-3).

The three most commonly used fiber mist eliminators are the vertical tube, vertical panel, and horizontal dual pad types. They differ from one another in the arrangement of the fiber elements, which are composed of either chemically resistant glass or fluorocarbon, and in the means employed to collect the trapped liquid. The operating characteristics of these three types are compared with electrostatic precipitators in Table 5.17-3.

TABLE 5.17-3. EMISSION COMPARISON AND COLLECTION EFFICIENCY OF TYPICAL ELECTROSTATIC PRECIPITATOR AND FIBER MIST ELIMINATORS[a]

	Particle size collection efficiency, %		Acid mist emissions			
			98% acid plants[b]		Oleum plants	
Control device	>3 μm	≤3μm	kg/Mg	lb/ton	kg/Mg	lb/ton
Electrostatic precipitator	99	100	0.05	0.10	0.06	0.12
Fiber mist eliminator						
Tabular	100	95-99	0.01	0.02	0.01	0.02
Panel	100	90-98	0.05	0.10	0.05	0.10
Dual pad	100	93-99	0.055	0.11	0.055	0.11

[a]Reference 2.
[b]Based on manufacturers' generally expected results. Calculated for 8% SO_2 concentration in gas converter.

References for Section 5.17

1. Atmospheric Emissions from Sulfuric Acid Manufacturing Processes, 999-AP-13, U.S. Department of Health, Education and Welfare, Washington, DC, 1966.

2. Unpublished report on control of air pollution from sulfuric acid plants, U.S. Environmental Protection Agency, Research Triangle Park, NC, August 1971.

3. Standards of Performance for New Stationary Sources, 36 FR 24875, December 23, 1971.

4. M. Drabkin and Kathryn J. Brooks, A Review of Standards of Performance for New Stationary Sources - Sulfuric Acid Plants, EPA Contract No. 68-02-2526, Mitre Corporation, McLean, VA, June 1978.

5. Final Guideline Document: Control of Sulfuric Acid Mist Emissions from Existing Sulfuric Acid Production Units, EPA 450/2-77-019, U.S. Environmental Protection Agency, Research Triangle Park, NC, September 1977.

5.18 SULFUR RECOVERY

5.18.1 Process Description [1,2]

Most of the elemental sulfur produced from hydrogen sulfide (H_2S) is made by the modified Claus process. A simplified flow diagram of this process is shown in Figure 5.18-1. The process consists of the multistage catalytic oxidation of hydrogen sulfide according to the following overall Reaction:

$$2H_2S + O_2 \rightarrow 2S + 2H_2O \qquad (1)$$

In the first step, one third of the H_2S is reacted with air in a furnace and combusted to SO_2 according to Reaction (2):

$$H_2S + 1.5O_2 \rightarrow SO_2 + H_2O \qquad (2)$$

The heat of the reaction is recovered in a waste heat boiler or sulfur condenser.

For gas streams with low concentrations of H_2S (20 - 60%), approximately one third of the gas stream is fed to the furnace and the H_2S is nearly completely combusted to SO_2, while the remainder of the gas is bypassed around the furnace. This is the "split stream" configuration. For gas streams with higher H_2S concentrations, the entire gas stream is fed to the furnace with just enough air to combust one third of the H_2S to SO_2. This is the "partial combustion" configuration. In this configuration, as much as 50 to 60 percent conversion of the hydrogen sulfide to elemental sulfur takes place in the initial reaction chamber by Reaction (1). In extremely low concentrations of H_2S (<25 - 30%), a Claus process variation known as "sulfur recycle" may be used, where product sulfur is recycled to the furnace and burned, raising the effective sulfur level where flame stability may be maintained in the furnaces.

After the reaction furnace, the gases are cooled to remove elemental sulfur and then reheated. The remaining H_2S in the gas stream is then reacted with the SO_2 over a bauxite catalyst at 500 - 600°F (260 - 316°C) to produce elemental sulfur according to Reaction 3:

$$2H_2S + SO_2 \rightleftarrows 3S + 2H_2O \qquad (3)$$

Because this is a reversible reaction, equilibrium requirements limit the conversion. Lower temperatures favor elemental sulfur formation, but at too low a temperature, elemental sulfur fouls the catalyst. Because the reaction is exothermic, the conversion attainable in one stage is limited. Therefore, two or more stages are used in series, with interstage cooling to remove the heat of reaction and to condense the sulfur.

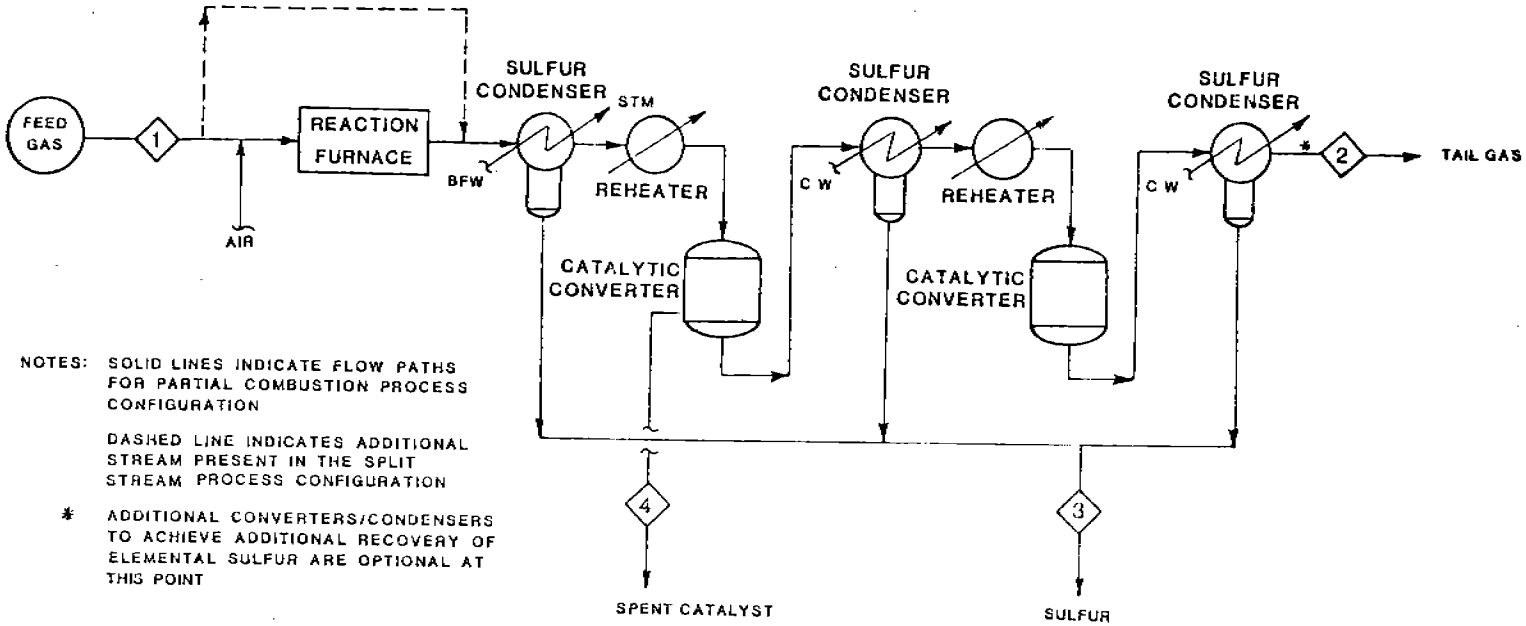

Figure 5.18-1. Typical flow diagram - Claus Process sulfur recovery.

Carbonyl sulfide (COS) and carbon disulfide (CS_2) are formed in the reaction furnace in the presence of carbon dioxide and hydrocarbons:

$$CO_2 + H_2S \rightleftarrows H_2O + COS \quad (4)$$

$$COS + H_2S \rightleftarrows H_2O + CS_2 \quad (5)$$

$$CH_4 + 4S \rightleftarrows CS_2 + 2H_2S \quad (6)$$

About 0.25 to 2.5 percent of the sulfur fed may be lost in this way. Additional sulfur may be lost as vapor, mist or droplets.

5.18.2 Emissions and Controls

Tail gas from a Claus sulfur recovery unit contains a variety of pollutants, including sulfur dioxide, hydrogen sulfide, other reduced sulfur compounds (such as COS and CS_2), carbon monoxide, and volatile organic compounds. If no other controls are used, the tail gas is incinerated, so that the emissions consist mostly of sulfur dioxide. Smaller amounts of carbon monoxide are also emitted.

The emissions of SO_2 (along with H_2S and sulfur vapor) depend directly on the sulfur recovery efficiency of the Claus plant. This efficiency is dependent upon many factors, including the following:

- Number of catalytic conversion stages
- Inlet feed stream composition
- Operating temperatures and catalyst maintenance
- Maintenance of the proper stoichiometric ratio of H_2S/SO_2
- Operating capacity factor

Recovery efficiency increases with the number of catalytic stages used. For example, for a Claus plant fed with 90 percent H_2S, sulfur recovery is approximately 85 percent for one catalytic stage and 95 percent for two or three stages.

Recovery efficiency also depends on the inlet feed stream composition. Sulfur recovery increases with increasing H_2S concentration in the feed stream. For example, a plant having two or three catalytic stages would have a sulfur recovery efficiency of approximately 90 percent when treating a 15 mole percent H_2S feed stream, 93 percent for a 50 mole percent H_2S stream, and 95 percent for a 90 mole percent H_2S stream. Various contaminants in the feed gas reduce Claus sulfur recovery efficiency. Organic compounds in the feed require extra air for combustion, and added water and inert gas from burning these organics decrease sulfur concentrations and thus lower sulfur recovery. Higher molecular weight organics also reduce efficiencies because of soot formation on the catalyst. High concentrations of CO_2 in the feed gas reduce catalyst life.

Since the Claus reactions are exothermic, sulfur recovery is enhanced by removing heat and operating the reactors at as low a temperature as practicable without condensing sulfur on the catalyst. Recovery efficiency also depends on catalyst performance. One to 2 percent loss in recovery efficiency over the period of catalyst life has been reported. Maintenance of the 2:1 stoichiometric ratio of H_2S and SO_2 is essential for efficient sulfur recovery. Deviation above or below this ratio results in a loss of efficiency. Operation of a Claus plant below capacity may also impair Claus efficiency somewhat.

Removal of sulfur compounds from Claus plant tail gas is possible by three general schemes:

1) Extension of the Claus reaction to increase overall sulfur recovery,

2) Conversion of sulfur gases to SO_2, followed by SO_2 removal technology,

3) Conversion of sulfur gases to H_2S, followed by H_2S removal technology.

Processes in the first scheme remove additional sulfur compounds by carrying out the Claus reaction at lower temperatures to shift equilibrium of the Claus reactions toward formation of additional sulfur. The IFP-1, BSR/Selectox, Sulfreen, and Amoco CBA processes use this technique to reduce the concentration of tail gas sulfur compounds to 1500 - 2500 ppm, thus increasing the sulfur recovery of the Claus plant to 99 percent.

In the second class of processes, the tail gas is incinerated to convert all sulfur compounds to SO_2. The SO_2 is then recovered by one of several processes, such as the Wellman-Lord. In the Wellman-Lord and certain other processes, the SO_2 absorbed from the tail gas is recycled to the Claus plant to recover additional sulfur. Processes in this class can reduce the concentration of sulfur compounds in the tail gas to 200 - 300 ppm or less, for an overall sulfur recovery efficiency (including the Claus plant) of 99.9+ percent.

The third method for removal of sulfur compounds from Claus tail gas involves converting the sulfur compounds to H_2S by mixing the tail gas with a reducing gas and passing it over a reducing catalyst. The H_2S is then removed, by the Stretford process (in the Beavon and Clean Air processes) or by an amine absorption system (SCOT process). The Beavon and Clean Air processes recover the H_2S as elemental sulfur, and the SCOT process produces a concentrated H_2S stream which is recycled to the Claus process. These processes reduce the concentration of sulfur compounds in the tail gas to 200 - 300 ppm or less and increase the overall recovery efficiency of the Claus plant to 99.9+ percent.

A New Source Performance Standard for Claus sulfur recovery plants in petroleum refineries was promulgated in March 1978. This standard limits emissions to 0.025 percent by volume (250 ppm) of SO_2 on a dry basis and at zero percent oxygen, or 0.001 percent by volume of H_2S and 0.03 percent by volume of H_2S, COS, and CS_2 on a dry basis and at zero percent oxygen.

Table 5.18-1. EMISSION FACTORS FOR MODIFIED CLAUS SULFUR RECOVERY PLANTS

EMISSION FACTOR RATING: D

Number of Catalytic Stages	Typical Recovery of Sulfur, %[a]	SO_2 Emissions[b] lb/ton	kg/MT
Two, uncontrolled	92 to 95	348 to 211	174 to 105
Three, uncontrolled	95 to 97.5	211 to 167	106 to 84
Four, uncontrolled	96 to 99	167 to 124	84 to 62
Controlled[c]	99 to 99.9	40 to 4	20 to 2

[a]Efficiencies are for feed gas streams with high H_2S concentrations. Gases with lower H_2S concentrations would have lower efficiencies. For example, a 2 or 3 stage plant could have a recovery efficiency of 95% for a 90% H_2S stream, 93% for 50% H_2S, and 90% for 15% H_2S.

[b]Based on net weight of pure sulfur produced. The range in emission fractors corresponds to the range in percentage recovery of sulfur. SO_2 emissions calculated from percentage sulfur recovery by following equation:

$$SO_2 \text{ emissions (kg/MT)} = \frac{(100-\% \text{ recovery})}{\% \text{ recovery}} \times 2000$$

[c]Lower percent recovery is for control by extended Claus, and higher percent is for conversion to and removal of H_2S or SO_2.

References for Section 5.18

1. E. C. Cavanaugh, et al., Environmental Assessment Data Base for Low/Medium Btu Gasification Technology, Volume II, EPA Contract No. 68-02-2147, Radian Corporation, Austin, TX, September 1977.

2. Standards Support and Environmental Impact Statement, Volume 1: Proposed Standards of Performance for Petroleum Refinery Sulfur Recovery Plants. EPA-450/2-76-016a, U. S. Environmental Protection Agency, Research Triangle Park, NC, September 1976.

3. B. Goar and T. Arrington, "Guidelines for Handling Sour Gas", Oil and Gas Journal, 76(26): 160-164, June 26, 1978.

5.19 SYNTHETIC FIBERS

5.19.1 Process Description[1]

Synthetic fibers are classified into two major categories, semi-synthetic and "true" synthetic. Semi-synthetics, such as viscose rayon and acetate fibers, result when natural polymeric materials such as cellulose are brought into a dissolved or dispersed state and then spun into fine filaments. True synthetic polymers, such as Nylon, * Orlon, and Dacron, result from addition and other polymerization reactions that form long chain molecules.

True synthetic fibers begin with the preparation of extremely long, chain-like molecules. The polymer is spun in one of four ways:[2] (1) melt spinning, in which molten polymer is pumped through spinneret jets, the polymer solidifying as it strikes the cool air; (2) dry spinning, in which the polymer is dissolved in a suitable organic solvent, and the resulting solution is forced through spinnerets; (3) wet spinning, in which the solution is coagulated in a chemical as it emerges from the spinneret; and (4) core spinning, the newest method, in which a continuous filament yarn together with short-length "hard" fibers is introduced onto a spinning frame in such a way as to form a composite yarn.

5.19.2 Emissions and Controls[1]

In the manufacture of viscose rayon, carbon disulfide and hydrogen sulfide are the major gaseous emissions. Air pollution controls are not normally used to reduce these emissions, but adsorption in activated carbon at an efficiency of 80 to 95 percent, with subsequent recovery of the CS_2 can be accomplished.[3] Emissions of gaseous hydrocarbons may also occur from the drying of the finished fiber. Table 5.19-1 presents emission factors for semi-synthetic and true synthetic fibers.

Table 5.19-1. EMISSION FACTORS FOR SYNTHETIC FIBERS MANUFACTURING
EMISSION FACTOR RATING: E

Type of fiber	Hydrocarbons		Carbon disulfide		Hydrogen sulfide		Oil vapor or mist	
	lb/ton	kg/MT	lb/ton	kg/MT	lb/ton	kg/MT	lb/ton	kg/MT
Semi-synthetic								
Viscose rayon[a,b]	–	–	55	27.5	6	3	–	–
True synthetic[c]								
Nylon	7	3.5	–	–	–	–	15	7.5
Dacron	–	–	–	–	–	–	7	3.5

[a]Reference 4.
[b]May be reduced by 80 to 95 percent adsorption in activated charcoal.[3]
[c]Reference 5.

*Mention of company or product names does not constitute endorsement by the Environmental Protection Agency.

References for Section 5.19

1. Air Pollutant Emission Factors. Final Report. Resources Research, Inc. Reston, Va. Prepared for National Air Pollution Control Administration, Durham, N.C., under Contract Number CPA-22-69-119. April 1970.

2. Fibers, Man-Made. In: Kirk-Othmer Encyclopedia of Chemical Technology. New York, John Wiley and Sons, Inc. 1969.

3. Fluidized Recovery System Nabs Carbon Disulfide. Chem. Eng. *70*(8):92-94, April 15, 1963.

4. Private communication between Resources Research, Incorporated, and Rayon Manufacturing Plant. December 1969.

5. Private communication between Resources Research, Incorporated, and E.I. Dupont de Nemours and Company. January 13, 1970.

5.20 SYNTHETIC RUBBER

5.20.1. Emulsion Styrene-Butadiene Copolymers

General - Two types of polymerization reaction are used to produce styrene-butadiene copolymers, the emulsion type and the solution type. This Section addresses volatile organic compound (VOC) emissions from the manufacture of copolymers of styrene and butadiene made by emulsion polymerization processes. The emulsion products can be sold in either a granular solid form, known as crumb, or in a liquid form, known as latex.

Copolymers of styrene and butadiene can be made with properties ranging from those of a rubbery material to those of a very resilient plastic. Copolymers containing less than 45 weight percent styrene are known as styrene-butadiene rubber (SBR). As the styrene content is increased over 45 weight percent, the product becomes increasingly more plastic.

Emulsion Crumb Process - As shown in Figure 5.20-1, fresh styrene and butadiene are piped separately to the manufacturing plant from the storage area. Polymerization of styrene and butadiene proceeds continuously though a train of reactors, with a residence time in each reactor of approximately 1 hour. The reaction product formed in the emulsion phase of the reaction mixture is a milky white emulsion called latex. The overall polymerization reaction ordinarily is not carried out beyond a 60 percent conversion of monomers to polymer, because the reaction rate falls off considerably beyond this point and product quality begins to deteriorate.

Because recovery of the unreacted monomers and their subsequent purification are essential to economical operation, unreacted butadiene and styrene from the emulsion crumb polymerization process normally are recovered. The latex emulsion is introduced to flash tanks where, using vacuum flashing, the unreacted butadiene is removed. The butadiene is then compressed, condensed and pumped back to the tank farm storage area for subsequent reuse. The condenser tail gases and noncondensibles pass through a butadiene adsorber/desorber unit, where more butadiene is recovered. Some noncondensibles and VOC vapors pass to the atmosphere or, at some plants, to a flare system. The latex stream from the butadiene recovery area is then sent to the styrene recovery process, usually taking place in perforated plate steam stripping columns. From the styrene stripper, the latex is stored in blend tanks.

From this point in the manufacturing process, latex is processed continuously. The latex is pumped from the blend tanks to coagulation vessels, where dilute sulfuric acid (H_2SO_4 of pH 4 to 4.5) and sodium chloride solution are added. The acid and brine mixture causes the emulsion to break, releasing the styrene-butadiene copolymer as crumb product. The coagulation vessels are open to the atmosphere.

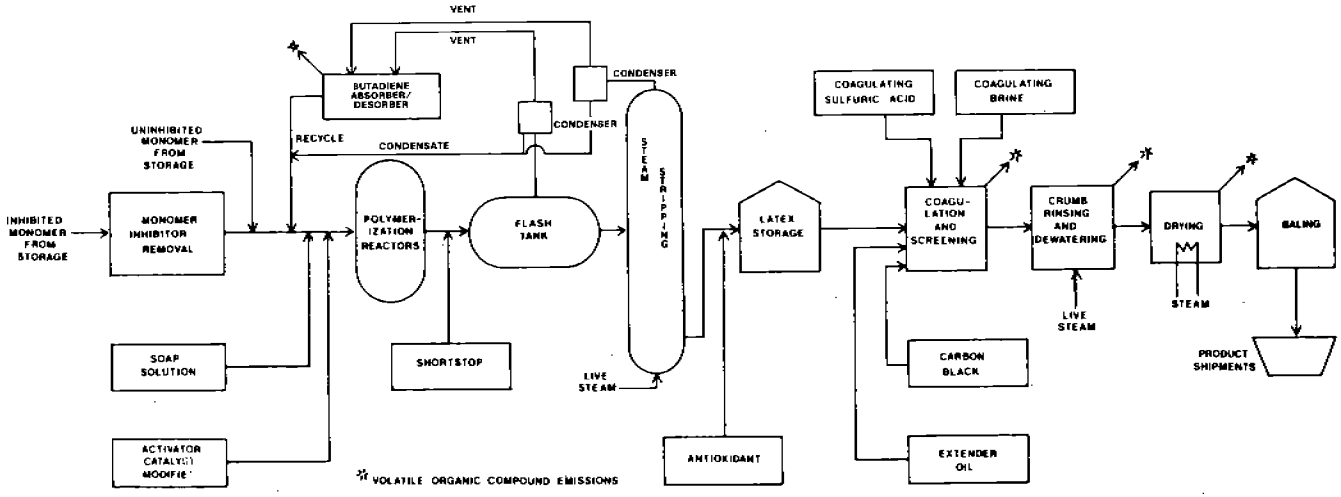

Figure 5.20-1. Typical process for crumb production by emulsion polymerization.

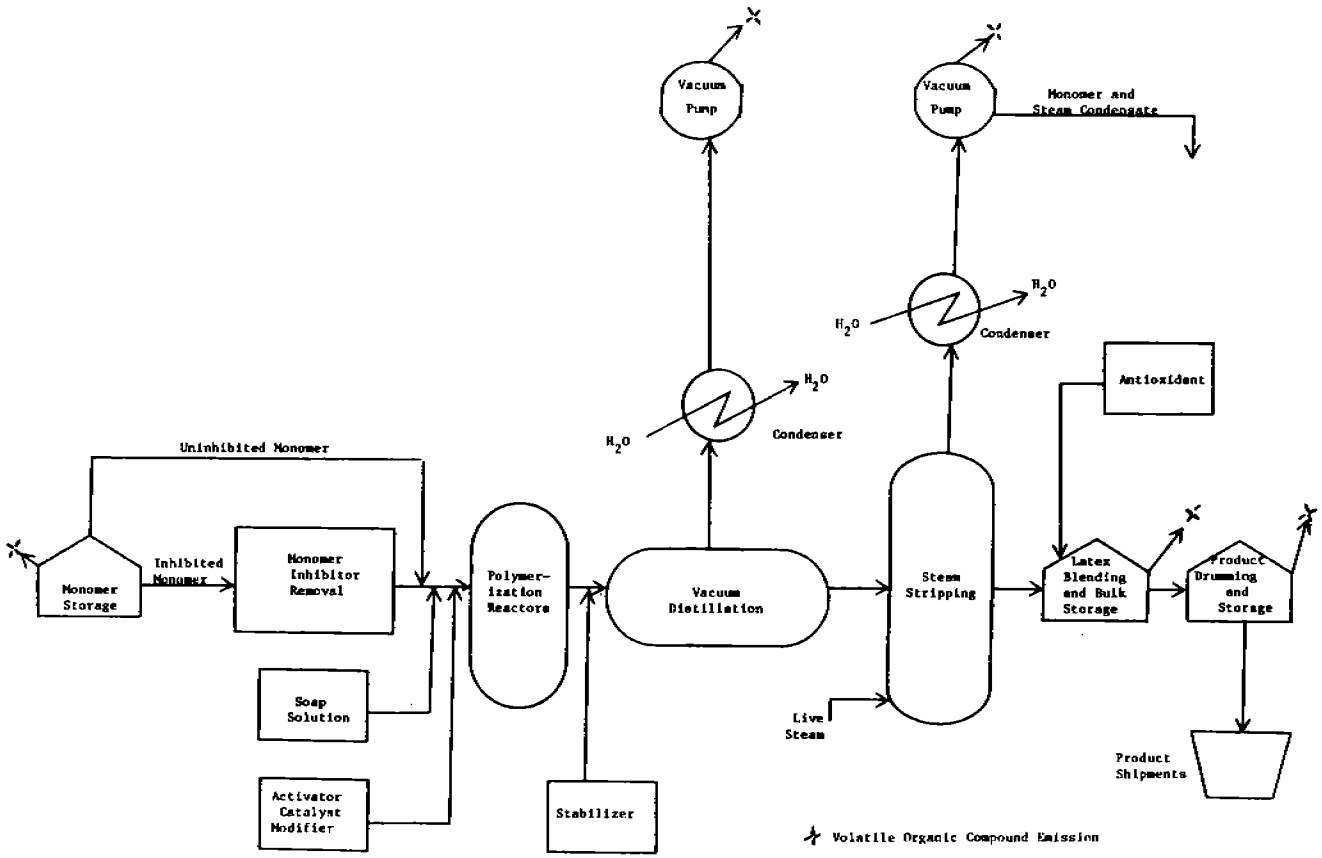

Figure 5.20-2. Typical process for latex production by emulsion polymerization.

TABLE 5.20-1. EMISSION FACTORS FOR EMULSION STYRENE-BUTADIENE COPOLYMER PRODUCTION[a]

EMISSION FACTOR RATING: B

Process	Volatile Organic Emissions[b]	
	g/kg	lb/ton
Emulsion Crumb		
Monomer recovery, uncontrolled[c]	2.6	5.2
Absorber vent	0.26	0.52
Blend/coagulation tank, uncontrolled[d]	0.42	0.84
Dryers[e]	2.51	5.02
Emulsion Latex		
Monomer removal		
Condenser vent[f]	8.45	16.9
Blend tanks		
Uncontrolled[f]	0.1	0.2

[a]Nonmethane VOC, mainly styrene and butadiene. For emulsion crumb and emulsion latex processes only. Factors for related equipment and operations (storage, fugitives, boilers, etc.) are presented in other Sections of AP-42.
[b]Expressed as units per unit of copolymer produced.
[c]Average of 3 industry supplied stack tests.
[d]Average of 1 industry stack test and 2 industry supplied emission estimates.
[e]No controls available. Average of 3 industry supplied stack tests and 1 industry estimate.
[f]EPA estimates from industry supplied data, confirmed by industry.

Leaving the coagulation process, the crumb and brine acid slurry is separated by screens into solid and liquid. The crumb product is processed in rotary presses that squeeze out most of the entrained water. The liquid (brine/acid) from the screening area and the rotary presses is cycled to the coagulation area for reuse.

The partially dried crumb is then processed in a continuous belt dryer which blows hot air at approximately 93°C (200°F) across the crumb to complete the drying of the product. Some plants have installed single pass dryers, where space permits, but most plants still use the triple pass dryers which were installed as original equipment in the 1940s. The dried product is baled and weighed before shipment.

Emulsion Latex Process - Emulsion polymerization can also be used to produce latex products. These latex products have a wider range of properties and uses than do the crumb products, but the plants are usually much smaller. Latex production, shown in Figure 5.20-2, follows the same basic processing steps as emulsion crumb polymerization, with the exception of final product processing.

As in emulsion crumb polymerization, the monomers are piped to the processing plant from the storage area. The polymerization reaction is taken to near completion (98 to 99 percent conversion), and the recovery of unreacted monomers is therefore uneconomical. Process economy is directed towards maximum conversion of the monomers in one process trip.

Because most emulsion latex polymerization is done in a batch process, the number of reactors used for latex production is usually smaller than for crum production. The latex is sent to a blowdown tank where, under vacuum, any unreacted butadiene and some unreacted styrene are removed from the latex. If the unreacted styrene content of the latex has not been reduced sufficiently to meet product specifications in the blowdown step, the latex is introduced to a series of steam stripping steps to reduce the content further. Any steam and styrene vapor from these stripping steps is taken overhead and is sent to a water cooled condenser. Any uncondensibles leaving the condenser are vented to the atmosphere.

After discharge from the blowdown tank or the styrene stripper, the latex is stored in process tanks. Stripped latex is passed through a series of screen filters to remove unwanted solids and is stored in blending tanks, where antioxidants are added and mixed. Finally, latex is pumped from the blending tanks to be packaged into drums or to be bulk loaded into railcars or tank trucks.

Emissions and Controls - Emission factors for emulsion styrene-butadiene copolymer production processes are presented in Table 5.20-1.

In the emulsion crumb process, uncontrolled noncondensed tail gases (VOC) pass through a butadiene absorber control device, which is 90 percent efficient, to the atmosphere or, in some plants, to a flare stack.

No controls are presently employed for the blend tank and/or coagulation tank areas, on either crumb or latex facilities. Emissions from dryers in the crumb process and the monomer removal part of the latex process do not employ control devices.

Individual plant emissions may vary from the average values listed in Table 5.20-1 with facility age, size and plant modification factors.

References for Section 5.20

1. Control Techniques Guideline (Draft), EPA Contract No. 68-02-3168, GCA, Inc., Chapel Hill, NC, April 1981.

2. Emulsion Styrene-Butadiene Copolymers: Background Document, EPA Contract No. 68-02-3063, TRW Inc., Research Triangle Park, NC, May 1981.

3. Confidential written communication from C. Fabian, U.S. Environmental Protection Agency, Research Triangle Park, NC, to Styrene-Butadiene Rubber File (76/15B), July 16, 1981.

5.21 Terephthalic Acid

5.21.1 Process Description[1]

Terephthalic acid (TPA) is made by air oxidation of p-xylene and requires purification for use in polyester fiber manufacture. A typical continuous process for the manufacture of crude terephthalic acid (C-TPA) is shown in Figure 5.21-1. The oxidation and product recovery portion essentially consists of the Mid-Century oxidation process, whereas the recovery and recycle of acetic acid and recovery of methyl acetate are essentially as practiced by dimethyl terephthalate (DMT) technology. The purpose of the DMT process is to convert the terephthalic acid contained in C-TPA to a form that will permit its separation from impurities. C-TPA is extremely insoluble in both water and most common organic solvents. Additionally, it does not melt, it sublimes. Some products of partial oxidation of p-xylene, such as p-toluic acid and p-formyl benzoic acid, appear as impurities in TPA. Methyl acetate is also formed in significant amounts in the reaction.

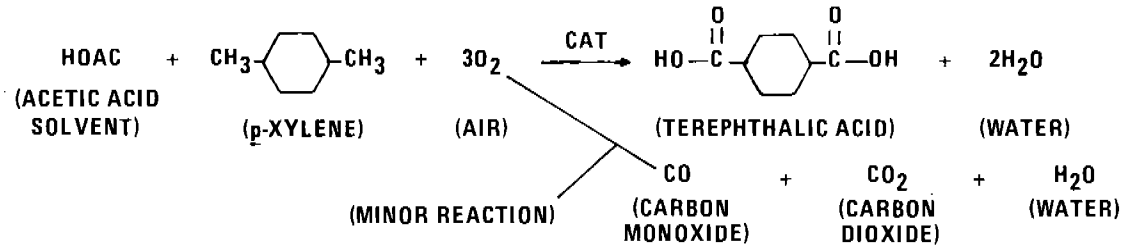

C-TPA Production

Oxidation of p-xylene - P-xylene (stream 1 of Figure 5.21-1), fresh acetic acid (2), a catalyst system, such as manganese or cobalt acetate and sodium bromide (3), and recovered acetic acid are combined into the liquid feed entering the reactor (5). Air (6), compressed to a reaction pressure of about 2000 kPa (290 psi), is fed to the reactor. The temperature of the exothermic reaction is maintained at about 200°C (392°F) by controlling the pressure at which the reaction mixture is permitted to boil and form the vapor stream leaving the reactor (7).

Inert gases, excess oxygen, CO, CO_2, and volatile organic compounds (VOC) (8) leave the gas/liquid separator and are sent to the high pressure absorber. This stream is scrubbed with water under pressure, resulting in a gas stream (9) of reduced VOC content. Part of the discharge from the high pressure absorber is dried and is used as a source of inert gas (IG), and the remainder is passed through a pressure control valve and a noise silencer before being discharged to the atmosphere through process vent A. The underflow (23) from the absorber is sent to the azeotrope still for recovery of acetic acid.

Crystallization and Separation - The reactor liquid containing TPA (10) flows to a series of crystallizers, where the pressure is relieved and the

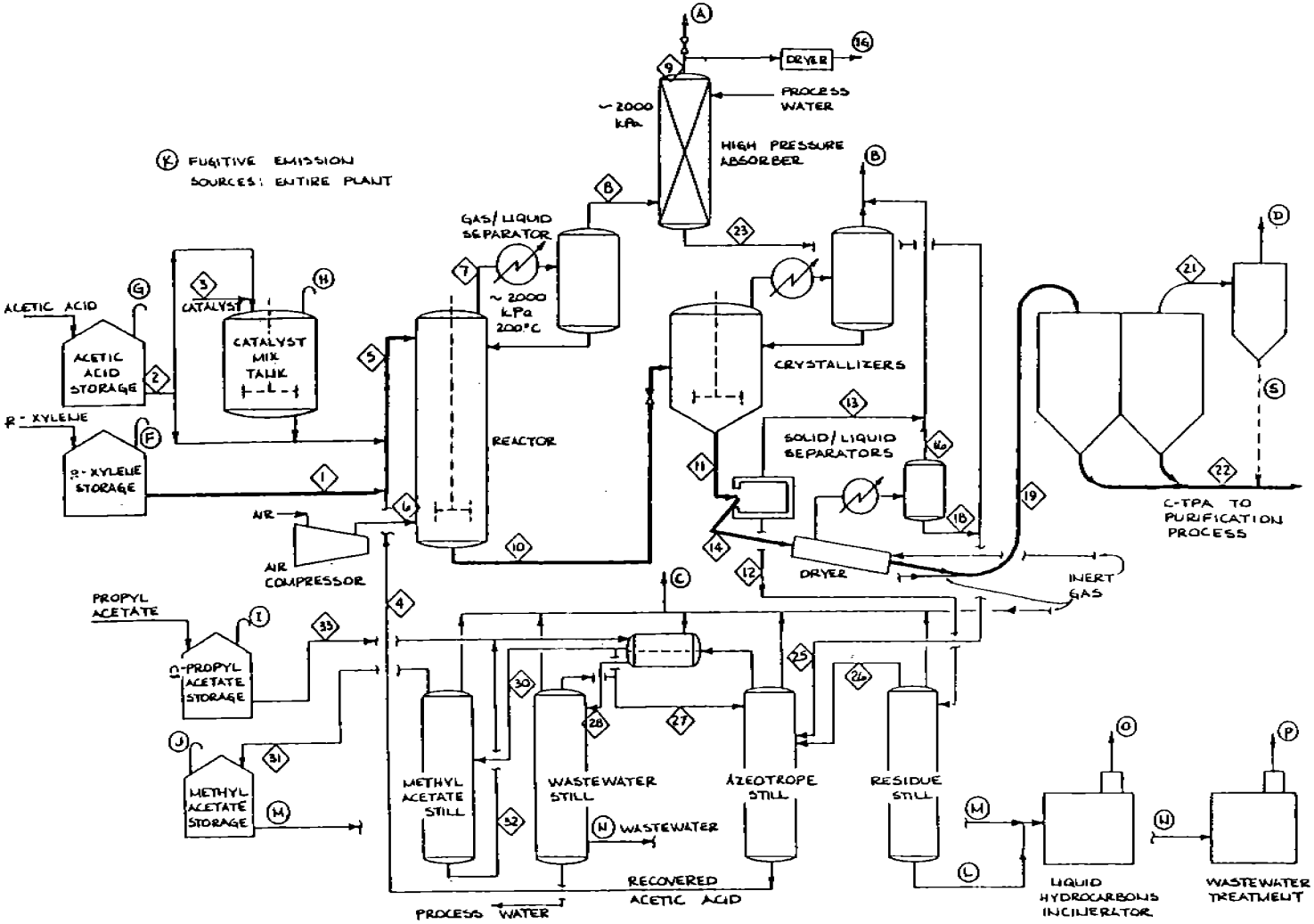

Figure 5.21-1. Crude Terephthalic Acid Process.

liquid is cooled by the vaporization and return of condensed VOC and water. The partially oxidized impurities are more soluble in acetic acid and tend to remain in solution, while TPA crystallizes from the liquor. The inert gas that was dissolved and entrained in the liquid under pressure is released when the pressure is relieved and is subsequently vented to the atmosphere along with the contained VOC (B). The slurry (11) from the crystallizers is sent to solid/liquid separators, where the TPA is recovered as a wet cake (14). The mother liquor (12) from the solid/liquid separators is sent to the distillation section, while the vent gas (13) is discharged to the atmosphere (B).

Drying, Handling and Storage - The wet cake (14) from solid/liquid separation is sent to dryers, where with the use of heat and IG, the moisture, predominately acetic acid, is removed, leaving the product, C-TPA, as dry free flowing crystals (19). IG is used to convey the product (19) to storage silos. The transporting gas (21) is vented from the silos to bag dust collectors to reduce its particulate loading, then is discharged to the atmosphere (D). The solids (S) from the bag filter can be forwarded to purification or can be incinerated.

Hot VOC laden IG from the drying operation is cooled to condense and recover VOC (18). The cooled IG (16) is vented to the atmosphere (B), and the condensate (stream 18) is sent to the azeotrope still for recovery of acetic acid.

Distillation and Recovery - The mother liquor (12) from solid/liquid separation flows to the residue still, where acetic acid, methyl acetate and water are recovered overhead (26) and product residues are discarded. The overhead (26) is sent to the azeotrope still where dry acetic acid is obtained by using n-propyl acetate as the water removing agent.

The aqueous phase (28) contains saturation amounts of n-propyl acetate and methyl acetate, which are stripped from the aqueous matter in the wastewater still. Part of the bottoms product is used as process water in absorption, and the remainder (N) is sent to wastewater treatment. A purge stream of the organic phase (30) goes to the methyl acetate still, where methyl acetate and saturation amounts of water are recovered as an overhead product (31) and are disposed of as a fuel (M). n-propyl acetate, obtained as the bottoms product (32), is returned to the azeotrope still. Process losses of n-propyl acetate are made up from storage (33). A small amount of inert gas, which is used for blanketing and instrument purging, is emitted to the atmosphere through vent C.

C-TPA Purification

The purification portion of the Mid-Century oxidation process involves the hydrogenation of C-TPA over a palladium containing catalyst at about 232°C (450°F). High purity TPA is recrystallized from a high pressure water solution of the hydrogenated material.

The Olin-Mathieson manufacturing process is similar to the Mid-Century process except the former uses 95 percent oxygen, rather than air, as the oxidizing agent. The final purification step consists essentially of a

continuous sublimation and condensation procedure. The C-TPA is combined with small quantities of hydrogen and a solid catalyst, dispersed in steam, and transported to a furnace. There the C-TPA is vaporized and certain of the contained impurities are catalytically destroyed. Catalyst and non-volatile impurities are removed in a series of filters, after which the pure TPA is condensed and transported to storage silos.

5.21.2 Emissions and Controls[1-3]

A general characterization of the atmospheric emissions from the production of C-TPA is difficult, because of the variety of processes. Emissions vary considerably, both qualitatively and quantitatively. The Mid-Century oxidation process appears to be one of the lowest polluters, and its predicted preeminence will suppress future emissions totals.

The reactor gas at vent A normally contains nitrogen (from air oxidation); unreacted oxygen; unreacted p-xylene; acetic acid (reaction solvent); carbon monoxide, carbon dioxide, and methyl acetate from oxidation of p-xylene and acetic acid not recovered by the high pressure absorber; and water. The quantity of VOC emitted at vent A can vary with absorber pressure and the temperature of exiting vent gases. During crystallization of terephthalic acid and separation of crystalized solids from the solvent (by centrifuge or filters), noncondensible gases carrying VOC are released. These vented gases and the C-TPA dryer vent gas are combined and released to the atmosphere at vent B. Different methods used in this process can affect the amounts of noncondensible gases and accompanying VOC emitted from this vent.

Gases released from the distillation section at vent C are the small amount of gases dissolved in the feed stream to distillation; the inert gas used in inert blanketing, instrument purging pressure control; and the VOC vapors carried by the noncondensable gases. The quantity of this discharge is usually small.

The gas vented from the bag filters on the product storage tanks (silos) (D) is dry, reaction generated inert gas containing the VOC not absorbed in the high pressure absorber. The vented gas stream contains a small quantity of TPA particulate that is not removed by the bag filters.

Performance of carbon adsorption control technology for a VOC gas stream similar to the reactor vent gas (A) and product transfer vent gas (D) has been demonstrated, but, carbon monoxide (CO) emissions will not be reduced. An alternative to the carbon adsorption system is a thermal oxidizer which provides reduction of both CO and VOC.

Emission sources and factors for the C-TPA process are presented in Table 5.21-1.

TABLE 5.21-1. UNCONTROLLED EMISSION FACTORS FOR CRUDE TEREPHTHALIC ACID MANUFACTURE[a]

EMISSION FACTOR RATING: C

Emission Source	Stream Designation (Figure 5.21-1)	Emissions (g/kg) Nonmethane VOC[b,c]	CO[c]
Reactor vent	A	15	17
Crystallization, separation, drying vent	B	1.9	-
Distillation and recovery vent	C	1.1	-
Product transfer vent[d]	D	1.8	2

[a]Factors are expressed as g of pollutant/kg of product produced.
Dash = not applicable.
[b]Reference 1. VOC gas stream consists of methyl acetate, p-xylene, and acetic acid. No methane was found.
[c]Reference 1. Typically, thermal oxidation results in >99% reduction of VOC and CO. Carbon adsorption gives a 97% reduction of VOC only (Reference 1).
[d]Stream contains 0.7 g of TPA particulates/kg. VOC and CO emissions originated in reactor offgas (IG) used for transfer.

References for Section 5.21

1. S. W. Dylewski, Organic Chemical Manufacturing, Volume 7: Selected Processes, EPA-450/3-80-028b, U. S. Environmental Protection Agency, Research Triangle Park, NC, January 1981.

2. D. F. Durocher, et al., Screening Study To Determine Need for Standards of Performance for New Sources of Dimethyl Terephthalate and Terephthalic Acid Manufacturing, EPA Contract No. 68-02-1316, Radian Corporation, Austin, TX, July 1976.

3. J. W. Pervier, et al., Survey Reports on Atmospheric Emissions from the Petrochemical Industry, Volume II, EPA-450/3-73-005b, U. S. Environmental Protection Agency, Research Triangle Park, NC, April 1974.

5.22 LEAD ALKYL

5.22.1 Process Description[1]

Two alkyl lead compounds, tetraethyl lead (TEL) and tetramethyl lead (TML), are used as antiknock gasoline additives. Over 75 percent of the 1973 additive production was TEL, more than 90 percent of which was made by alkylation of sodium/lead alloy.

Lead alkyl is produced in autoclaves by the reaction of sodium/lead alloy with an excess of either ethyl (for TEL) or methyl (for TML) chloride in the presence of acetone catalyst. The reaction mass is distilled to separate the product, which is then purified, filtered and mixed with chloride/bromide additives. Residue is sluiced to a sludge pit, from which the bottoms are sent to an indirect steam dryer, and the dried sludge is fed to a reverberatory furnace to recover lead.

Gasoline additives are also manufactured by the electrolytic process, in which a solution of ethyl (or methyl) magnesium chloride and ethyl (or methyl) chloride is electrolyzed, with lead metal as the anode.

5.22 Emissions and Controls[1]

Lead emissions from the sodium/lead alloy process consist of particulate lead oxide from the recovery furnace (and, to a lesser extent, from the melting furnace and alloy reactor), alkyl lead vapor from process vents, and fugitive emissions from the sludge pit.

Emissions from the lead recovery furnace are controlled by fabric filters or wet scrubbers. Vapor streams rich in lead alkyl can either be incinerated and passed through a fabric filter or be scrubbed with water prior to incinerating.

Emissions from electrolytic process vents are controlled by using an elevated flare and a liquid incinerator, while a scrubber with toluene as the scrubbing medium controls emissions from the blending and tank car loading/unloading systems.

TABLE 5.22-1. LEAD ALKYL MANUFACTURE LEAD EMISSION FACTORS[a]

EMISSION FACTOR RATING: B

Process	Lead	
	kg/Mg	lb/ton
Electrolytic[b]	0.5	1.0
Sodium/lead alloy		
Recovery furnace[c]	28	55
Process vents, TEL[d]	2	4
Process vents, TML[d]	75	150
Sludge pits[d]	0.6	1.2

[a]No information on other emissions from lead alkyl manufacturing is available. Emission factors are expressed as weight per unit weight of product.
[b]References 1-3.
[c]References 1-2, 4.
[d]Reference 1.

TABLE 5.22-2. LEAD ALKYL MANUFACTURE CONTROL EFFICIENCIES[a]

Process	Control	Percent reduction
Sodium/lead alloy	Fabric filter	99+
	Low energy wet scrubber	80-85
	High energy wet scrubber	95-99

[a]Reference 1.

References for Section 5.22

1. Background Information in Support of the Development of Performance Standards for the Lead Additive Industry, EPA Contract No. 68-02-2085, PEDCo-Environmental Specialists, Inc., Cincinnati, OH, January 1976.

2. Control Techniques for Lead Air Emissions, EPA-450/2-77-012, U. S. Environmental Protection Agency, Research Triangle Park, NC, December 1977.

3. W. E. Davis, Emissions Study of Industrial Sources of Lead Air Pollutants, 1970, EPA Contract No. 68-02-0271, W. E. Davis and Associates, Leawood, KS, April 1973.

4. R. P. Betz, et al., Economics of Lead Removal in Selected Industries, EPA Contract No. 68-02-0611, Batelle Columbus Laboratories, Columbus, OH, August 1973.

5.23 PHARMACEUTICALS PRODUCTION

5.23.1 Process Description

Thousands of individual products are categorized as pharmaceuticals. These products usually are produced in modest quantities in relatively small plants using batch processes. A typical pharmaceutical plant will use the same equipment to make several different products at different times. Rarely is equipment dedicated to the manufacture of a single product.

Organic chemicals are used as raw materials and as solvents, and some chemicals such as ethanol, acetone, isopropanol and acetic anhydride are used in both ways. Solvents are almost always recovered and used many times.

In a typical batch process, solid reactants and solvent are charged to a reactor where they are held (and usually heated) until the desired product is formed. The solvent is distilled off, and the crude residue may be treated several times with additional solvents to purify it. The purified material is separated from the remaining solvent by centrifuge and finally is dried to remove the last traces of solvent. As a rule, solvent recovery is practiced for each step in the process where it is convenient and cost effective to do so. Some operations involve very small solvent losses, and the vapors are vented to the atmosphere through a fume hood. Generally, all operations are carried out inside buildings, so some vapors may be exhausted through the building ventilation system.

Certain pharmaceuticals - especially antibiotics - are produced by fermentation processes. In these instances, the reactor contains an aqueous nutrient mixture with living organisms such as fungi or bacteria. The crude antibiotic is recovered by solvent extraction and is purified by essentially the same methods described above for chemically synthesized pharmaceuticals. Similarly, other pharmaceuticals are produced by extraction from natural plant or animal sources. The production of insulin from hog or beef pancreas is an example. The processes are not greatly different from those used to isolate antibiotics from fermentation broths.

5.23.2 Emissions and Controls

Emissions consist almost entirely of organic solvents that escape from dryers, reactors, distillation systems, storage tanks and other operations. These emissions are exclusively nonmethane organic compounds. Emissions of other pollutants are negligible (except for particulates in unusual circumstances) and are not treated here. It is not practical to attempt to evaluate emissions from individual steps in the production process or to associate emissions with individual pieces of equipment, because of the great variety of batch operations that may be carried out

at a single production plant. It is more reasonable to obtain data on total solvent purchases by a plant and to assume that these represent replacements for solvents lost by evaporation. Estimates can be refined by subtracting the materials that do not enter the air because of being incinerated or incorporated into the pharmaceutical product by chemical reaction.

If plant-specific information is not available, industrywide data may be used instead. Table 5.23-1 lists annual purchases of solvents by U.S. pharmaceutical manufacturers and shows the ultimate disposition of each solvent. Disposal methods vary so widely with the type of solvent that it is not possible to recommend average factors for air emissions from generalized solvents. Specific information for individual solvents must be used. Emissions can be estimated by obtaining plant-specific data on purchases of individual solvents and computing the quantity of each solvent that evaporates into the air, either from information in Table 5.23-1 or from information obtained for the specific plant under consideration. If solvent volumes are given, rather than weights, liquid densities in Table 5.23-1 can be used to compute weights.

Table 5.23-1 gives for each plant the percentage of each solvent that is evaporated into the air and the percentage that is flushed into the sewer. Ultimately, much of the volatile material from the sewer will evaporate and will reach the air somewhere other than the pharmaceutical plant. Thus, for certain applications it may be appropriate to include both the air emissions and the sewer disposal, in an emissions inventory that covers a broad geographic area.

Since solvents are expensive and must be recovered and reused for economic reasons, solvent emissions are controlled as part of the normal operating procedures in a pharmaceutical industry. In addition, most manufacturing is carried out inside buildings, where solvent losses must be minimized to protect the health of the workers. Water or brine cooled condensers are the most common control devices, with carbon adsorbers in occasional use. With each of these methods, solvent can be recovered. Where the main objective is not solvent reuse but is the control of an odorous or toxic vapor, scrubbers or incinerators are used. These control systems are usually designed to remove a specific chemical vapor and will be used only when a batch of the corresponding drug is being produced. Usually, solvents are not recovered from scrubbers and reused, and of course, no solvent recovery is possible from an incinerator.

It is difficult to make a quantitative estimate of the efficiency of each control method, because it depends on the process being controlled, and pharmaceutical manufacture involves hundreds of different processes. Incinerators, carbon adsorbers and scrubbers have been reported to remove greater than 90 percent of the organics in the control equipment inlet stream. Condensers are limited, in that they can only reduce the concentration in the gas stream to saturation at the

condenser temperature, but not below that level. Lowering the temperature will, of course, lower the concentration at saturation, but it is not possible to operate at a temperature below the freezing point of one of the components of the gas stream.

TABLE 5.23-1. SOLVENT PURCHASES AND ULTIMATE DISPOSITION BY PHARMACEUTICAL MANUFACTURERS[a]

Solvent	Annual Purchase (metric tons)	Ultimate Disposition (percent)					Liquid Density lb/gal @ 68°F
		Air Emissions	Sewer	Incineration	Solid Waste or Contract Haul	Product	
Acetic Acid	930	1	82	-	-	17	8.7
Acetic Anhydride	1,265	1	57	-	-	42	9.0
Acetone	12,040	14	22	38	7	19	6.6
Acetonitrile	35	83	17	-	-	-	6.6
Amyl Acetate	285	42	58	-	-	-	7.3
Amyl Alcohol	1,430	99	-	-	-	1	6.8
Benzene	1,010	29	37	16	8	10	7.3
Blendan (AMOCO)	530	-	-	-	-	100	NA
Butanol	320	24	8	1	36	31	6.8
Carbon Tetrachloride	1,850	11	7	82	-	-	13.3
Chloroform	500	57	5	-	38	-	12.5
Cyclohexylamine	3,930	-	-	-	-	100	7.2
o-Dichlorobenzene	60	2	98	-	-	-	10.9
Diethylamine	50	94	6	-	-	-	5.9
Diethyl Carbonate	30	4	71	-	-	25	8.1
Dimethyl Acetamide	95	7	-	-	93	-	7.9
Dimethyl Formamide	1,630	71	3	20	6	-	7.9
Dimethylsulfoxide	750	1	28	71	-	-	11.1
1,4-Dioxane	43	5	-	-	95	-	8.6
Ethanol	13,230	10	6	7	1	76	6.6
Ethyl Acetate	2,380	30	47	20	3	-	7.5
Ethyl Bromide	45	-	100	-	-	-	12.1
Ethylene Glycol	60	-	100	-	-	-	9.3
Ethyl Ether	280	85	4	-	11	-	6.0
Formaldehyde	30	19	77	-	-	4	b
Formamide	440	-	67	-	26	7	9.5
Freons	7,150	0.1	-	-	-	99.9	c
Hexane	530	17	-	15	68	-	5.5
Isobutyraldehyde	85	50	50	-	-	-	6.6
Isopropanol	3,850	14	17	17	7	45	6.6
Isopropyl Acetate	480	28	11	61	-	-	7.3
Isopropyl Ether	25	50	50	-	-	-	6.0
Methanol	7,960	31	45	14	6	4	6.6
Methyl Cellosolve	195	47	53	-	-	-	8.7
Methylene Chloride	10,000	53	5	20	22	-	11.1
Methyl Ethyl Ketone	260	65	12	23	-	-	6.7
Methyl Formate	415	-	74	-	12	14	8.2
Methyl Isobutyl Ketone	260	80	-	-	-	20	6.7
Polyethylene Glycol 600	3	-	-	-	-	100	9.5
Pyridine	3	-	100	-	-	-	8.2
Skelly Solvent B (hexanes)	1,410	29	2	69	-	-	5.6
Tetrahydrofuran	4	-	-	100	-	-	7.4
Toluene	6,010	31	14	26	29	-	7.2
Trichloroethane	135	100	-	-	-	-	11.3
Xylene	3,090	6	19	70	5	-	7.2

[a] These data were reported by 26 member companies of the Pharmaceutical Manufacturers Association, accounting for 53 percent of pharmaceutical sales in 1975.

[b] Sold as aqueous solutions containing 37% to 50% formaldehyde by weight.

[c] Some Freons are gases, and others are liquids weighing 12 - 14 lb/gal.

Reference for Section 5.23

1. Control of Volatile Organic Emissions from Manufacture of Synthesized Pharmaceutical Products, EPA-450/2-78-029, U. S. Environmental Protection Agency, Research Triangle Park, NC, December 1978.

5.24 MALEIC ANHYDRIDE

5.24.1 General[1]

The dominant end use of maleic anhydride (MA) is in the production of unsaturated polyester resins. These laminating resins, which have high structural strength and good dielectric properties, have a variety of applications in automobile bodies, building panels, molded boats, chemical storage tanks, lightweight pipe, machinery housings, furniture, radar domes, luggage and bathtubs. Other end products are fumaric acid, agricultural chemicals, alkyd resins, lubricants, copolymers, plastics, succinic acid, surface active agents, and more. In the United States, one plant uses only n-butane and another uses n-butane for 20 percent of its feedstock, but the primary raw material used in the production of MA is benzene. The MA industry is converting old benzene plants and building new plants to use n-butane. MA also is a byproduct of the production of phthalic anhydride. It is a solid at room temperature but is a liquid or gas during production. It is a strong irritant to skin, eyes and mucous membranes of the upper respiratory system.

The model MA plant, as described in this Section, has a benzene to MA conversion rate of 94.5 percent, has a capacity of 22,700 megagrams (25,000 tons) of MA produced per year, and runs 8000 hours per year.

Because of a lack of data on the n-butane process, this discussion covers only the benzene oxidation process.

5.24.2 Process Description[2]

Maleic anhydride is produced by the controlled air oxidation of benzene, illustrated by the following chemical reaction:

$$2\ C_6H_6 + 9\ O_2 \xrightarrow[\text{Catalyst}]{V_2O_5,\ MoO_3} 2\ C_4H_2O_3 + H_2O + 4\ CO_2$$

Benzene	Oxygen		Maleic anhydride	Water	Carbon dioxide

Vaporized benzene and air are mixed and heated before entering the tubular reactor. Inside the reactor, the benzene/air mixture is reacted in the presence of a catalyst which contains approximately 70 percent vanadium pentoxide (V_2O_5), with usually 25 to 30 percent molybdenum trioxide (MoO_3), forming a vapor of MA, water and carbon dioxide. The vapor, which may also contain oxygen, nitrogen, carbon monoxide, benzene, maleic acid, formaldehyde, formic acid and other compounds from side reactions, leaves the reactor and is cooled and partially condensed so that about 40 percent of the MA is recovered in a crude liquid state. The effluent is then passed through a separator which directs the liquid to storage and the remaining vapor to the product recovery absorber. The absorber contacts the vapor with water, producing a liquid of about 40 percent maleic acid. The

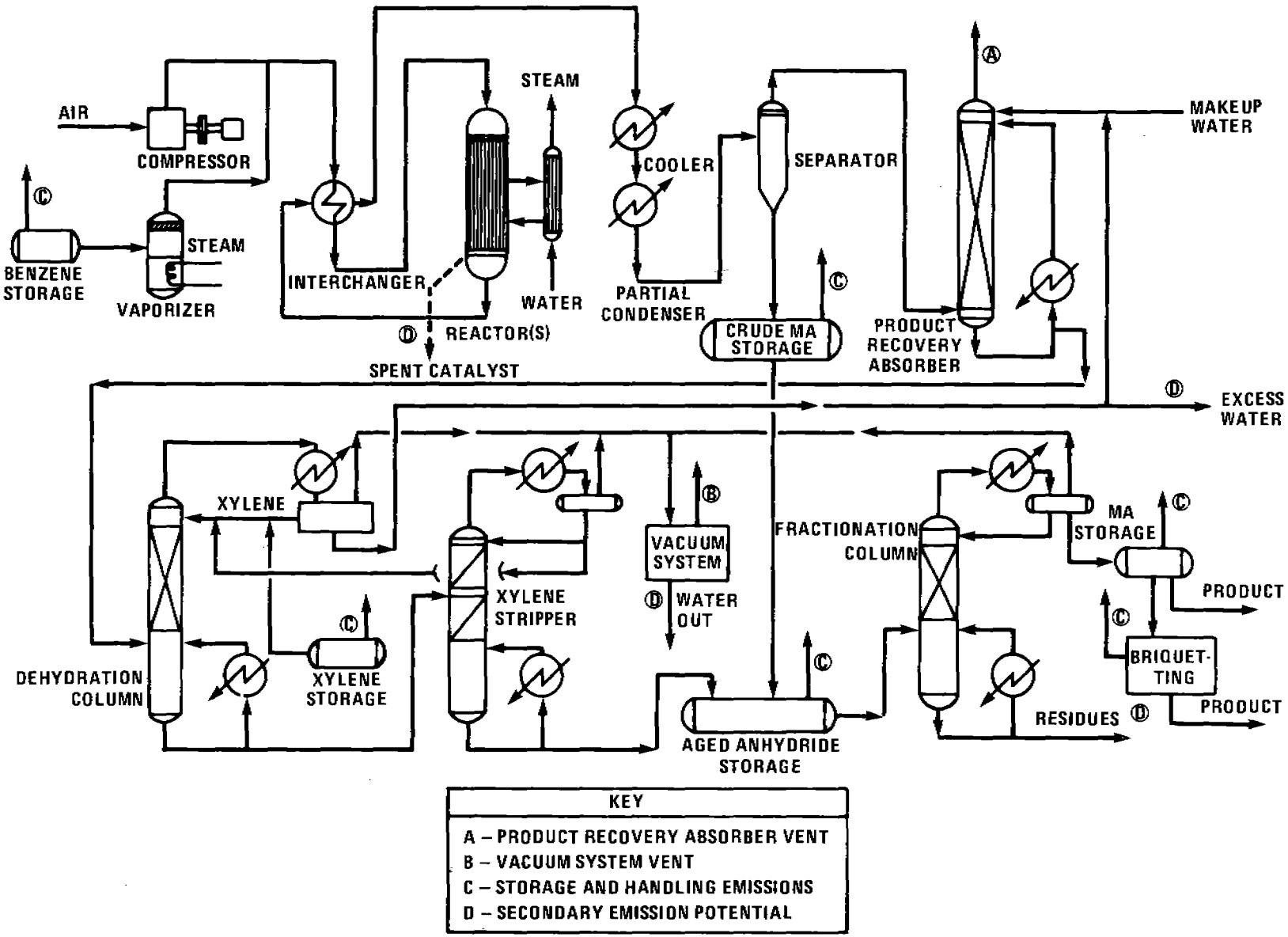

Figure 5.24-1. Process flow diagram for uncontrolled model plant.

40 percent mixture is converted to MA, usually by azeotropic distillation with xylene. Some processes may use a double effect vacuum evaporator at this point. The effluent then flows to the xylene stripping column where the xylene is extracted. This MA is then combined in storage with that from the separator. The molten product is aged to allow color forming impurities to polymerize. These are then removed in a fractionation column, leaving the finished product. Figure 5.24-1 represents a typical process.

MA product is usually stored in liquid form, although it is sometimes flaked and pelletized into briquets and bagged.

5.24.3 Emissions and Controls[2]

Nearly all emissions from MA production are from the main process vent of the product recovery absorber, the largest vent in the process. The predominant pollutant is unreacted benzene, ranging from 3 to 10 percent of the total benzene feed. The refining vacuum system vent, the only other exit for process emissions, produces 0.28 kilograms (0.62 lb) per hour of MA and xylene.

Fugitive emissions of benzene, xylene, MA and maleic acid also arise from the storage (see Section 4.3) and handling (see Section 9.1.3) of benzene, xylene and MA. Dust from the briquetting operations can contain MA, but no data are available on the quantity of such emissions.

TABLE 5.24-1. COMPOSITION OF UNCONTROLLED EMISSIONS FROM PRODUCT RECOVERY ABSORBER[a]

Component	Wt.%	kg/Mg	lb/ton
Nitrogen	73.37	21,406.0	42,812.0
Oxygen	16.67	4,863.0	9,726.0
Water	4.00	1,167.0	2,334.0
Carbon dioxide	3.33	972.0	1,944.0
Carbon monoxide	2.33	680.0	1,360.0
Benzene	0.33	67.0	134.0
Formaldehyde	0.05	14.4	28.8
Maleic acid	0.01	2.8	5.6
Formic acid	0.01	2.8	5.6
Total		29,175.0	58,350.0

[a]Reference 2.

Potential sources of secondary emissions are spent reactor catalyst, excess water from the dehydration column, vacuum system water, and fractionation column residues. The small amount of residual organics in the spent catalyst after washing has low vapor pressure and produces a small percentage of total emissions. Xylene is the principal organic contaminant in the excess water from the dehydration column and in the vacuum system water. The residues from the fractionation column are relatively heavy

organics, with a molecular weight greater than 116, and they produce a small percentage of total emissions.

Benzene oxidation process emissions can be controlled at the main vent by means of carbon adsorption, thermal incineration or catalytic incineration. Benzene emissions can be eliminated by conversion to the n-butane process. Catalytic incineration and conversion from the benzene process to the n-butane process are not discussed for lack of data. The vent from the refining vacuum system is combined with that of the main process, as a control for refining vacuum system emissions. A carbon adsorption system or an incineration system can be designed and operated at a 99.5 percent removal efficiency for benzene and volatile organic compounds with the operating parameters given in Appendix D of Reference 2.

TABLE 5.24-2. EMISSION FACTORS FOR MALEIC ANHYDRIDE PRODUCTION[a]
EMISSION FACTOR RATING: C

Source	Nonmethane VOC[b]		Benzene	
	kg/Mg	lb/ton	kg/Mg	lb/ton
Product vents (recovery absorber and refining vacuum system combined vent)				
Uncontrolled	87	174	67.0	134.0
With carbon adsorption[c]	0.34	0.68	0.34	0.68
With incineration	0.43	0.86	0.34	0.68
Storage and handling emissions[d]	-	-	-	-
Fugitive emissions[e]	-	-	-	-
Secondary emissions[f]	N/A	N/A	N/A	N/A

[a]No data are available for catalytic incineration or for plants producing MA from n-butane. Dash: see footnote. N/A: not available.

[b]VOC also includes the benzene. For recovery absorber and refining vacuum, VOC can be MA and xylene; for storage and handling, MA, xylene and dust from briquetting operations; for secondary emissions, residual organics from spent catalyst, excess water from dehydration column, vacuum system water, and fractionation column residues. VOC contains no methane.

[c]Before exhaust gas stream goes into carbon adsorber, it is scrubbed with caustic to remove organic acids and water soluble organics. Benzene is the only likely VOC remaining.

[d]See Section 4.3.

[e]See Section 9.1.3.

[f]Secondary emission sources are excess water from dehydration column, vacuum system water, and organics from fractionation column. No data are available on the quantity of these emissions.

Fugitive emissions from pumps and valves may be controlled by an appropriate leak detection system and maintenance program. No control devices are presently being used for secondary emissions.

References for Section 5.24

1. B. Dmuchovsky and J. E. Franz, "Maleic Anhydride", Kirk-Othmer Encyclopedia of Chemical Technology, Volume 12, John Wiley and Sons, Inc., New York, NY, 1967, pp. 819-837.

2. J. F. Lawson, Emission Control Options for the Synthetic Organic Chemicals Manufacturing Industry: Maleic Anhydride Product Report, EPA Contract No. 68-02-2577, Hydroscience, Inc., Knoxville, TN, March 1978.

6. FOOD AND AGRICULTURAL INDUSTRY

Before food and agricultural products are used by the consumer they undergo a number of processing steps, such as refinement, preservation, and product improvement, as well as storage and handling, packaging, and shipping. This section deals with the processing of food and agricultural products and the intermediate steps that present air pollution problems. Emission factors are presented for industries where data were available. The primary pollutant emitted from these processes is particulate matter.

6.1 ALFALFA DEHYDRATING

6.1.1 General [1-3]

Dehydrated alfalfa is a meal product resulting from the rapid drying of alfalfa by artifical means at temperatures above 212°F (100°C). Alfalfa meal is used in chicken rations, cattle feed, hog rations, sheep feed, turkey mash, and other formula feeds. It is important for its protein content, growth and reproductive factors, pigmenting xanthophylls, and vitamin contributions.

A schematic of a generalized alfalfa dehydrator plant is given in Figure 6.1-1. Standing alfalfa is mowed and chopped in the field and transported by truck to a dehydrating plant, which is usually located within 10 miles of the field. The truck dumps the chopped alfalfa (wet chops) onto a self-feeder, which carries it into a direct-fired, rotary drum. Within the drum, the wet chops are dried from an initial moisture content of about 60 to 80 percent (by weight) to about 8 to 16 percent. Typical combustion gas temperatures within the oil- or gas-fired drums range from 1800 to 2000°F (980 to 1092°C) at the inlet to 250 to 300°F (120 to 150°C) at the outlet.

From the drying drum, the dry chops are pneumatically conveyed into a primary cyclone that separates them from the high-moisture, high-temperature exhaust stream. From the primary cyclone, the chops are fed into a hammermill, which grinds the dry chops into a meal. The meal is pneumatically conveyed from the hammermill into a meal collector cyclone in which the meal is separated from the airstream and discharged into a holding bin. Meal is then fed into a pellet mill where it is steam conditioned and extruded into pellets.

From the pellet mill, the pellets are either pneumatically or mechanically conveyed to a cooler, through which air is drawn to cool the pellets and, in some cases, remove fines. Fines removal is more commonly effected in shaker screens following or ahead of the cooler, with the fines being conveyed back into the meal collector cyclone, meal bin, or pellet mill. Cyclone separators may be employed to separate entrained fines in the cooler exhaust and to collect pellets when the pellets are pneumatically conveyed from the pellet mill to the cooler.

Following cooling and screening, the pellets are transferred to bulk storage. Dehydrated alfalfa is most often stored and shipped in pellet form; however, in some instances, the pellets may be ground in a hammermill and shipped in meal form. When the finished pellets or ground pellets are pneumatically transferred to storage or loadout, additional cyclones may be employed for product airstream separation at these locations.

6.1.2 Emissions and Controls [1-3]

Particulate matter is the primary pollutant of concern from alfalfa dehydrating plants although some odors arise from the organic volatiles driven off during drying. Although the major source is the primary cooling cyclone, lesser sources include the downstream cyclone separators and the bagging and loading operations.

Emission factors for the various cyclone separators utilized in alfalfa dehydrating plants are given in Table 6.1-1. Note that, although these sources are common to many plants, there will be considerable variation from the generalized flow diagram in Figure 6.1-1 depending on the desired nature of the product, the physical layout of the plant, and the modifications made for air pollution control. Common variations include ducting the exhaust gas stream from one or more of the downstream cyclones back through the primary cyclone and ducting a portion of the primary cyclone exhaust back into the furnace. Another modification involves ducting a part of the meal collector cyclone exhaust back into the hammermill, with the remainder ducted to the primary cyclone or discharged directly to the atmosphere. Also, additional cyclones may be employed if the pellets are pneumatically rather than mechanically conveyed from the pellet mill to the cooler or if the finished pellets or ground pellets are pneumatically conveyed to storage or loadout.

Table 6.1-1. PARTICULATE EMISSION FACTORS FOR ALFALFA DEHYDRATING PLANTS
EMISSION FACTOR RATING: PRIMARY CYCLONES: A
ALL OTHER SOURCES: C

Sources[a]	Emissions	
	lb/ton of product[b]	kg/MT of product[b]
Primary cyclone	10[c]	5[c]
Meal collector cyclone[d]	2.6	1.3
Pellet collector cyclone[e]	Not available	Not available
Pellet cooler cyclone[f]	3	1.5
Pellet regrind cyclone[g]	8	4
Storage bin cyclone[h]	Neg.	Neg.

[a]The cyclones used for product/airstream separation are the air pollution sources in alfalfa dehydrating plants. All factors are based on References 1 and 2.

[b]Product consists of meal or pellets. These factors can be applied to the quantity of incoming wet chops by dividing by a factor of four.

[c]This average factor may be used even when other cyclone exhaust streams are ducted back into the primary cyclone. Emissions from primary cyclones may range from 3 to 35 lb/ton (1.5 to 17.5 kg/MT) of product and are more a function of the operating procedures and process modifications made for air pollution control than whether other cyclone exhausts are ducted back through the primary cyclone. Use 3 to 15 lb/ton (1.5 to 7.5 kg/MT) for plants employing good operating procedures and process modifications for air pollution control. Use higher values for older, unmodified, or less well run plants.

[d]This cyclone is also called the air meal separator or hammermill cyclone. When the meal collector exhaust is ducted back to the primary cyclone and/or the hammermill, this cyclone is no longer a source.

[e]This cyclone will only be present if the pellets are pneumatically transferred from the pellet mill to the pellet cooler.

[f]This cyclone is also called the pellet meal air separator or pellet mill cyclone. When the pellet cooler cyclone exhaust is ducted back into the primary cyclone, it is no longer a source.

[g]This cyclone is also called the pellet regrind air separator. Regrind operations are more commonly found at terminal storage facilities than at dehydrating plants.

[h]Small cyclone collectors may be used to collect the finished pellets when they are pneumatically transferred to storage.

Air pollution control (and product recovery) is accomplished in alfalfa dehydrating plants in a variety of ways. A simple, yet effective technique is the proper maintenance and operation of the alfalfa dehydrating equipment. Particulate emissions can be reduced significantly if the feeder discharge rates are uniform, if the dryer furnace is operated properly, if proper airflows are employed in the cyclone collectors, and if the hammermill is well maintained and not overloaded. It is especially important in this regard not to overdry and possibly burn the chops as this results in the generation of smoke and increased fines in the grinding and pelletizing operations.

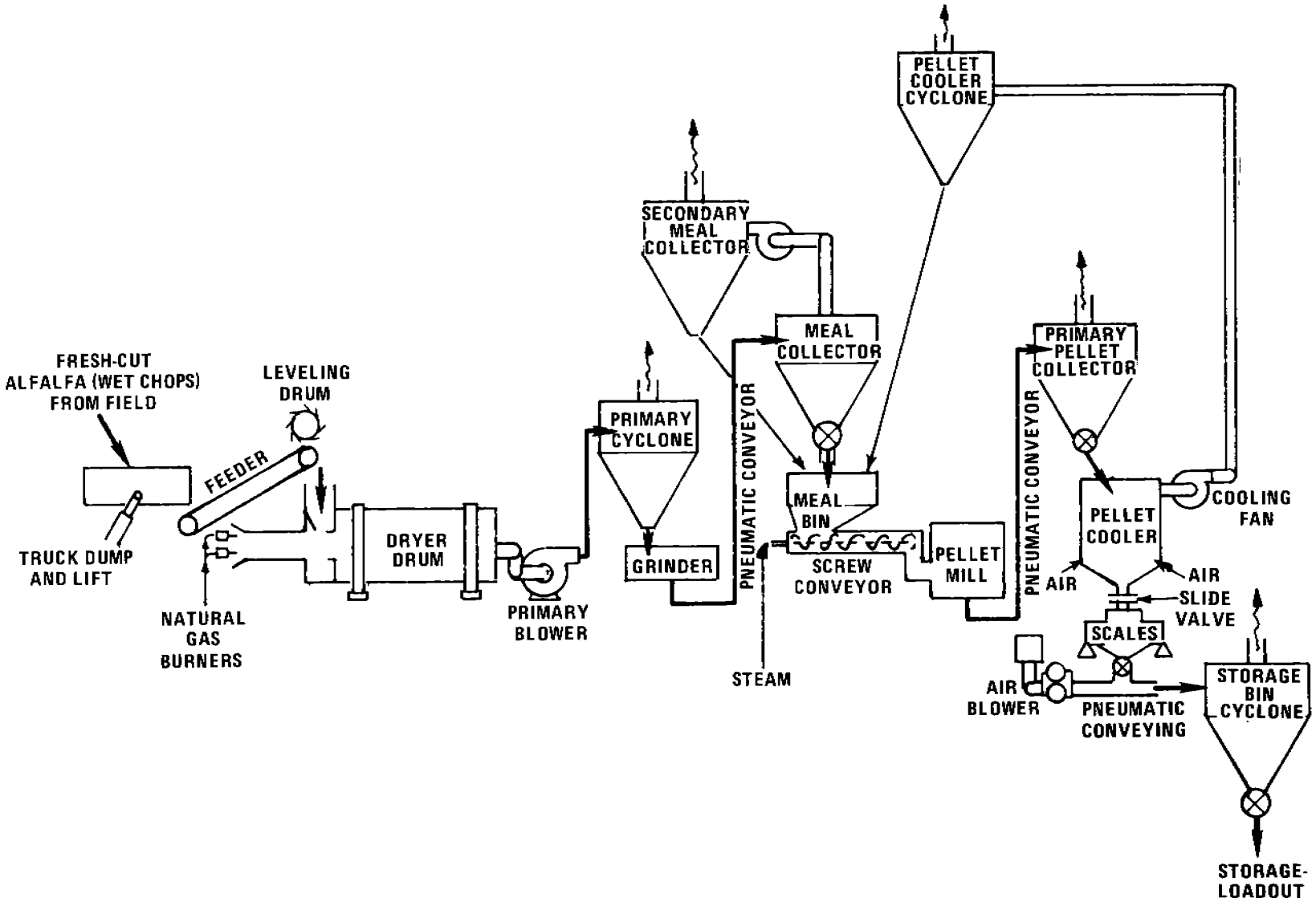

Figure 6.1-1. Generalized flow diagram for alfalfa dehydration plant.

Equipment modification provides another means of particulate control. Existing cyclones can be replaced with more efficient cyclones and concomitant air flow systems. In addition, the furnace and burners can be modified or replaced to minimize flame impingement on the incoming green chops. In plants where the hammermill is a production bottleneck, a tendency exists to overdry the chops to increase throughput, which results in increased emissions. Adequate hammermill capacity can reduce this practice.

Secondary control devices can be employed on the cyclone collector exhaust streams. Generally, this practice has been limited to the installation of secondary cyclones or fabric filters on the meal collector, pellet collector, or pellet cooler cyclones. Some measure of secondary control can also be effected on these cyclones by ducting their exhaust streams back into the primary cyclone. Primary cyclones are not controlled by fabric filters because of the high moisture content in the resulting exhaust stream. Medium energy wet scrubbers are effective in reducing particulate emissions from the primary cyclones, but have only been installed at a few plants.

Some plants employ cyclone effluent recycle systems for particulate control. One system skims off the particulate-laden portion of the primary cyclone exhaust and returns it to the furnace for incineration. Another system recycles a large portion of the meal collector cyclone exhaust back to the hammermill. Both systems can be effective in controlling particulates but may result in operating problems, such as condensation in the recycle lines and plugging or overheating of the hammermill.

References for Section 6.1

1. Source information supplied by Ken Smith of the American Dehydrators Association, Mission, Kan. December 1975.

2. Gorman, P.G. et al. Emission Factor Development for the Feed and Grain Industry. Midwest Research Institute. Kansas City, Mo. Prepared for Environmental Protection Agency, Research Triangle Park, N.C. under Contract No. 68-02-1324. Publication No. EPA-450/3-75-054. October 1974.

3. Smith, K.D. Particulate Emissions from Alfalfa Dehydrating Plants - Control Costs and Effectiveness. Final Report. American Dehydrators Association. Mission, Kan. Prepared for Environmental Protection Agency, Research Triangle Park, N.C. Grant No. R801446. Publication No. 650/2-74-007. January 1974.

6.2 COFFEE ROASTING

6.2.1 Process Description[1,2]

Coffee, which is imported in the form of green beans, must be cleaned, blended, roasted, and packaged before being sold. In a typical coffee roasting operation, the green coffee beans are freed of dust and chaff by dropping the beans into a current of air. The cleaned beans are then sent to a batch or continuous roaster. During the roasting, moisture is driven off, the beans swell, and chemical changes take place that give the roasted beans their typical color and aroma. When the beans have reached a certain color, they are quenched, cooled, and stoned.

6.2.2 Emissions[1,2]

Dust, chaff, coffee bean oils (as mists), smoke, and odors are the principal air contaminants emitted from coffee processing. The major source of particulate emissions and practically the only source of aldehydes, nitrogen oxides, and organic acids is the roasting process. In a direct-fired roaster, gases are vented without recirculation through the flame. In the indirect-fired roaster, however, a portion of the roaster gases are recirculated and particulate emissions are reduced. Emissions of both smoke and odors from the roasters can be almost completely removed by a properly designed afterburner.[1,2]

Particulate emissions also occur from the stoner and cooler. In the stoner, contaminating materials heavier than the roasted beans are separated from the beans by an air stream. In the cooler, quenching the hot roasted beans with water causes emissions of large quantities of steam and some particulate matter.[3] Table 6.2-1 summarizes emissions from the various operations involved in coffee processing.

Table 6.2-1. EMISSION FACTORS FOR ROASTING PROCESSES WITHOUT CONTROLS
EMISSION FACTOR RATING: B

Type of process	Pollutant							
	Particulates[a]		NO_x[b]		Aldehydes[b]		Organic acids[b]	
	lb/ton	kg/MT	lb/ton	kg/MT	lb/ton	kg/MT	lb/ton	kg/MT
Roaster								
Direct-fired	7.6	3.8	0.1	0.05	0.2	0.1	0.9	0.45
Indirect-fired	4.2	2.1	0.1	0.05	0.2	0.1	0.9	0.45
Stoner and cooler[c]	1.4	0.7	–	–	–	–	–	–
Instant coffee spray dryer	1.4[d]	0.7[d]	–	–	–	–	–	–

[a]Reference 3.
[b]Reference 1.
[c]If cyclone is used, emissions can be reduced by 70 percent.
[d]Cyclone plus wet scrubber always used, representing a controlled factor.

References for Section 6.2

1. Polglase, W.L., H.F. Dey, and R.T. Walsh. Coffee Processing. In: Air Pollution Engineering Manual. Danielson, J.A. (ed.). U.S. DHEW, PHS, National Center for Air Pollution Control. Cincinnati, Ohio. Publication Number 999-AP-40. 1967. p. 746-749.

2. Duprey, R.L. Compilation of Air Pollutant Emission Factors. U.S. DHEW, PHS, National Center for Air Pollution Control. Durham, N.C. PHS Publication Number 999-AP-42. 1968. p. 19-20.

3. Partee, F. Air Pollution in the Coffee Roasting Industry. Revised Ed. U.S. DHEW, PHS, Division of Air Pollution. Cincinnati, Ohio. Publication Number 999-AP-9. 1966.

6.3 COTTON GINNING

6.3.1 General[1]

The primary function of a cotton gin is to separate seed from the lint of raw seed cotton. Approximately one 500-pound bale of cotton can be produced from 1 ton of seed cotton. During ginning, lint dust, fine leaves, and other trash are emitted into the air. The degree of pollution depends on the seed cotton trash content, which depends on the method used to harvest the cotton. Handpicked cotton has a lower trash content than machine-stripped cotton.

6.3.2 Process Description[2]

Figure 6.3-1 is a flow diagram of the typical cotton ginning process. Each of the five ginning steps and associated equipment is described in the following sections.

6.3.2.1 Unloading System — Trucks and trailers transport seed cotton from the field to the gin. Pneumatic systems convey the seed cotton from the vehicles or storage houses to a separator and feed control unit. (Some gins utilize a stone and green boll trap for preliminary trash removal.) The screen assembly in the separator collects the seed cotton and allows it to fall into the feed control unit. The conveying air flows from the separator to a cyclone system where it is cleaned and discharged to the atmosphere.

6.3.2.2 Seed Cotton Cleaning System — Seed cotton is subjected to three basic conditioning processes — drying, cleaning, and extracting — before it enters the gin stand for separation of lint from seed. To ensure adequate conditioning, cotton gins typically use two conditioning systems in series (see Figure 6.3-1).

Cotton dryers are designed to reduce the moisture content of the seed cotton to an optimum level of 6.5 to 8.0 percent. A push-pull high-pressure fan system conveys seed cotton through the tower dryer to the cleaner, which loosens the cotton and removes fine particles of foreign matter such as leaf trash, sand, and dirt. Large pieces of foreign matter (e.g., sticks, stems, and burrs) are removed from the seed cotton by a different process, referred to as "extracting." Several types of extractors are used at cotton gins: burr machines, stick machines, stick and burr machines, stick and green leaf extractors, and extractor-feeders. The burr machine removes burrs and pneumatically conveys them to the trash storage area. The seed cotton then enters a stick (or a stick and green leaf) machine, which removes sticks, leaves, and stems. Afterwards, the seed cotton is pneumatically conveyed to the next processing step.

6.3.2.3 Overflow System — From the final conditioning unit, the seed cotton enters a screw conveyor distributor, which apportions the seed cotton to the extractor-feeders at a controlled rate. When the flow of seed cotton exceeds the limit of the extractor-feeders, the excess seed cotton flows into the overflow hopper. A pneumatic system transfers seed cotton from the overflow hopper back to the extractor-feeder as required.

6.3.2.4 Lint Cotton Handling System — Cotton enters the gin stand through a "huller front," which performs some cleaning. A saw grasps the locks of cotton and draws them through a widely spaced set of "huller ribs," which strip off hulls and sticks. The cotton locks are then drawn into the roll box, where seeds are separated from the fibers. As the seeds are removed, they slide down the face of the ginning ribs and fall to the bottom of the gin stand for subsequent removal to storage. Cotton lint is removed from the saw by a brush or a blast of air and conveyed pneumatically to the lint cleaning system for final cleaning and combing. The lint cotton is separated from the conveying air stream by a separator that forms the lint into a batt. This batt is fed into the first set of lint cleaners, where saws comb the lint cotton and remove leaf particles, grass, and motes.

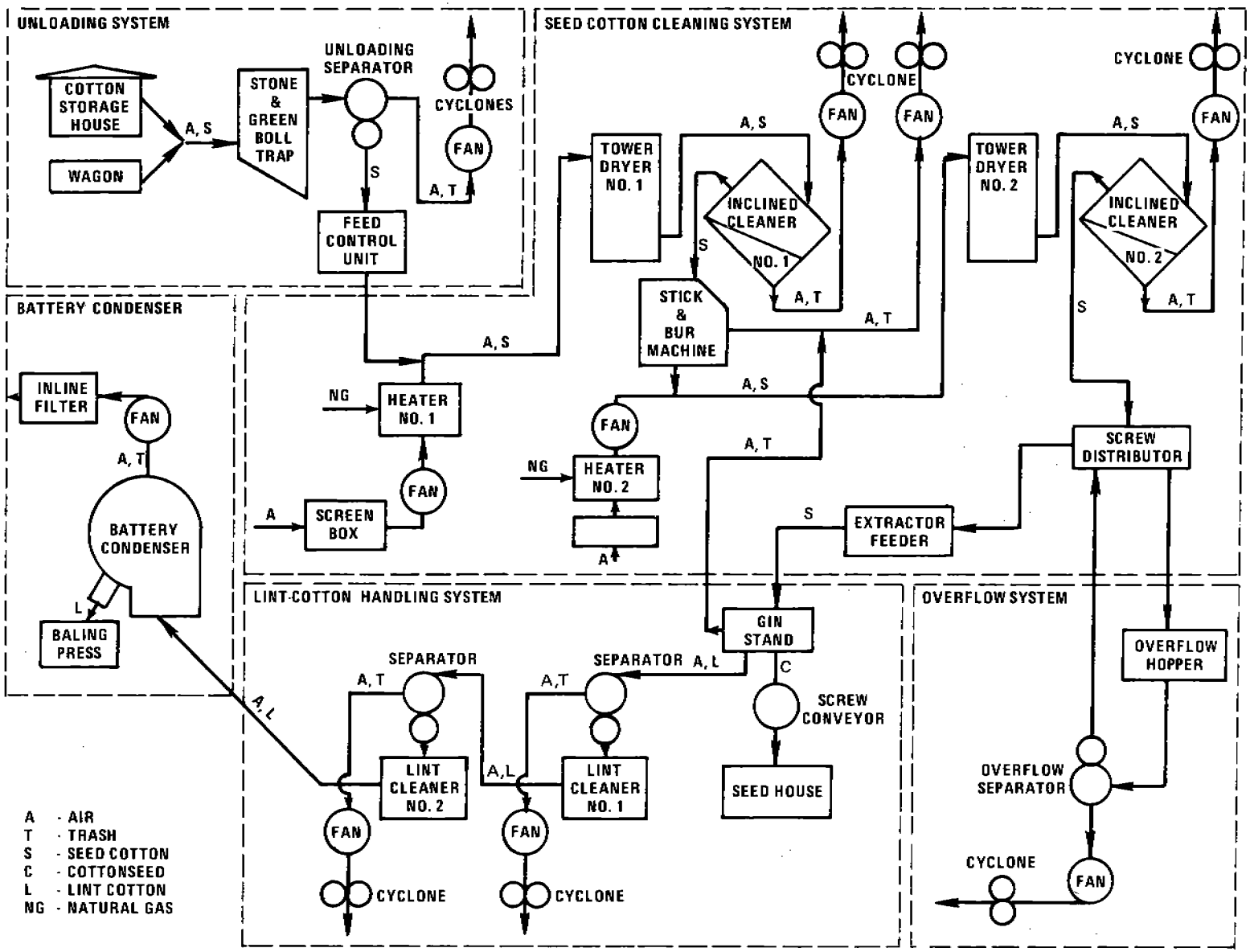

Figure 6.3-1. Flow diagram of cotton ginning process.[2]

6.3.2.5 Battery Condenser and Baling System — Lint cotton is pneumatically transported from the lint cleaning system to a battery condenser, which consists of drums equipped with screens that separate the lint cotton from the conveying air. The conveying air is then discharged through an in-line filter or cyclones before being exhausted to the atmosphere. The batt of lint cotton is then fed into the baling press, which packs it into uniform bales of cotton.

6.3.3 Emissions and Controls

The major sources of particulates from cotton ginning can be arranged into 10 emission source categories based on specific ginning operations (Figure 6.3-2). Three primary methods of particulate control are in use: (1) high efficiency cyclones on the high-pressure fan discharges with collection efficiencies greater than 99 percent,[2] (2) in-line filters on low-pressure fan exhaust vents with efficiencies of approximately 80 percent, and (3) fine screen coverings on condenser drums in the low-pressure systems with efficiencies of approximately 50 percent.[3,4] The unifilter is a new concept for collecting all wastes from cotton gins. It is designed to replace all cyclones, in-line filters, and covered condenser drums, and has a collection efficiency of up to 99 percent.[5]

Table 6.3-1 presents emission factors from uncontrolled cotton ginning operations.[1]

Table 6.3-2 presents emission factors for a typical cotton gin equipped with available control devices; the data base involved cotton gins with a variety of different control devices, including cyclones, in-line filters, screen coverings, and unifilters.[2,6-9] The total emission factor can be expected to vary by roughly a factor of two, depending on the type of seed cotton, the trash content of the seed cotton, the maintenance of control devices, and the plant operation procedures.

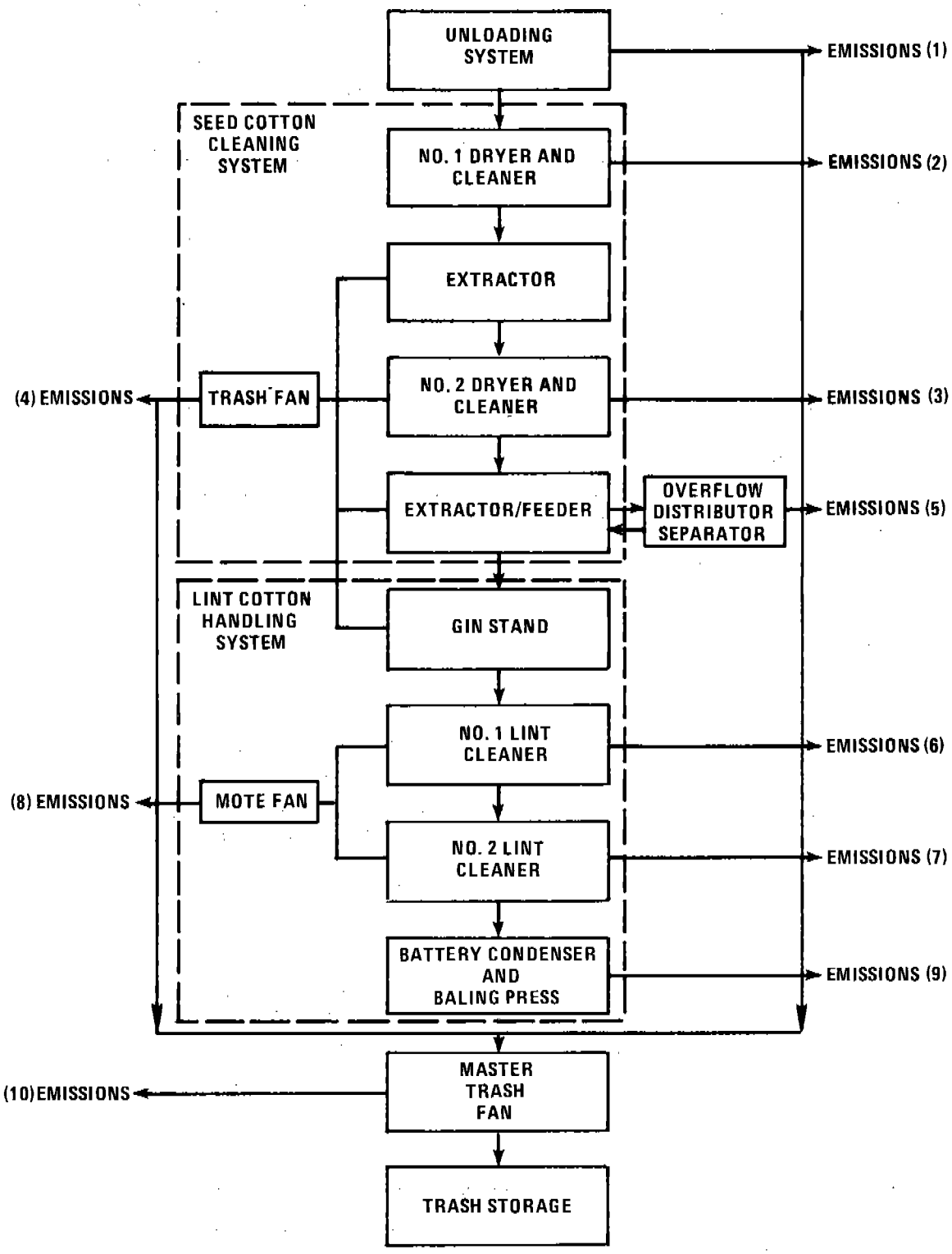

Figure 6.3-2. Emissions from a typical ginning operation.

Table 6.3-1. EMISSION FACTORS FOR COTTON GINNING OPERATIONS WITHOUT CONTROL[a,b]

EMISSION FACTOR RATING: C

Process	Estimated total particulate		Particulates >100 μm settled out, %[c]	Estimated emission factor (released to atmosphere)	
	lb/bale	kg/bale		lb/bale	kg/bale
Unloading fan	5	2.27	0	5.0	2.27
Seed cotton cleaning system					
Cleaners and dryers[d]	1	0.45	70	0.3	0.14
Stick and burr machine	3	1.36	95	0.2	0.09
Miscellaneous[e]	3	1.36	50	1.5	0.68
Total	12	5.44	---	7.0	3.2

[a]Reference 1.
[b]One bale weighs 500 pounds (226 kilograms).
[c]Percentage of the particles that settle out in the plant.
[d]Corresponds to items 1 and 2 in Table 6.3-2.
[e]Corresponds to items 4 through 9 in Table 6.3-2.

Table 6.3-2. PARTICULATE EMISSION FACTORS FOR COTTON GINS WITH CONTROLS[a]
EMISSION FACTOR RATING: C

Emission source[b]	Emission factor	
	lb/bale[c]	g/kg
1. Unloading fan	0.32	0.64
2. No. 1 dryer and cleaner	0.18	0.36
3. No. 2 dryer and cleaner	0.10	0.20
4. Trash fan	0.04	0.08
5. Overflow fan	0.08	0.16
6. No. 1 lint cleaner condenser	0.81	1.62
7. No. 2 lint cleaner condenser	0.15	0.30
8. Mote fan	0.20	0.40
9. Battery condenser	0.19	0.38
10. Master trash fan	0.17	0.34
Total	2.24	4.48

[a]References 2,6-9.
[b]Numbers correspond to those in Figure 6.3-2.
[c]A bale of cotton weighs 500 pounds (227 Kilograms).

References for Section 6.3

1. Air-borne Particulate Emissions from Cotton Ginning Operations. U.S. Department of Health, Education and Welfare, Public Health Service, Taft Sanitary Engineering Center. Cincinnati, Oh. 1960.

2. Source Assessment Document No. 27, Cotton Gins. Monsanto Research Corporation. Dayton, Oh. Prepared for U.S. Environmental Protection Agency, Research Triangle Park, N.C. Publication No. EPA-600/2-78-004a. December 1975.

3. McCaskill, O.L. and R.A. Wesley. The Latest in Pollution Control. Texas Cotton Ginners' Journal and Yearbook. 1974.

4. Baker, Roy. F. and Calvin B. Parnell, Jr. Three Types of Condenser Filters for Fly Lint and Dust Control at Cotton Gins. U.S. Department of Agriculture, Agriculture Research Service. Beltsville, Md. ARS-42-192. September 1971.

5. McCaskill, O.L. and R.A. Wesley. Unifilter Collecting System for Cotton-gin Waste Materials. U.S. Department of Agriculture, Agriculture Research Service. New Orleans, La. ARS-S-144. September 1976.

6. Parnell, C.B., Jr. and Roy V. Baker. Particulate Emissions of a Cotton Gin in the Texas Stripper Area. U.S. Department of Agriculture, Agriculture Research Service. Washington, D.C. Production Research Report No. 149. May 1973.

7. Kirk, I.W., T.E. Wright, and K.H. Read. Particulate Emissions from Commercial Cotton Ginning Operations. Southwestern Cotton Ginning Research Laboraory, Mesilla Park, New Mexico. Presented at ASAE 1976 Winter Meeting, Chicago, Illinois. December 1976.

8. Cotton Gin Emission Tests, Marana Gin, Producers Cotton Oil Company, Marana, Arizona. National Enforcement Investigations Center, Denver, Colo. and EPA Region IX. Publication No. EPA-330/2-78-008. May 1978.

9. Emission Test Report, Westside Farmers' Cooperative Gin #5, Tranquility, California. PEDCo Environmental, Inc., Cincinnati, Ohio. Prepared for U.S. EPA Division of Stationary Source Enforcement, Contract No. 68-01-4147, Task No. 47, PN 3370-2-D. February 1978.

6.4 FEED AND GRAIN MILLS AND ELEVATORS

6.4.1 General[1-3]

Grain elevators are buildings in which grains are gathered, stored, and discharged for use, further processing, or shipping. They are classified as "country," "terminal," and "export" elevators, according to their purpose and location. At country elevators, grains are unloaded, weighed, and placed in storage as they are received from farmers residing within about a 20-mile radius of the elevator. In addition, country elevators sometimes dry or clean grain before it is shipped to terminal elevators or processors.

Terminal elevators receive most of their grain from country elevators and ship to processors, other terminals, and exporters. The primary functions of terminal elevators are to store large quantities of grain without deterioration and to dry, clean, sort, and blend different grades of grain to meet buyer specifications.

Export elevators are similar to terminal elevators except that they mainly load grain on ships for export.

Processing of grain in mills and feed plants ranges from very simple mixing steps to complex industrial processes. Included are such diverse processes as: (1) simple mixing operations in feed mills, (2) grain milling in flour mills, (3) solvent extracting in soybean processing plants, and (4) a complex series of processing steps in a corn wet-milling plant.

6.4.2 Emissions and Controls

Grain handling, milling, and processing include a variety of operations from the initial receipt of the grain at either a country or terminal elevator to the delivery of a finished product. Flour, livestock feed, soybean oil, and corn syrup are among the products produced from plants in the grain and feed industry. Emissions from the feed and grain industry can be separated into two general areas, those occurring at grain elevators and those occurring at grain processing operations.

6.4.2.1 Grain Elevators - Grain elevator emissions can occur from many different operations in the elevator including unloading (receiving), loading (shipping), drying, cleaning, headhouse (legs), tunnel belt, gallery belt, and belt trippers. Emission factors for these operations at terminal, country, and export elevators are presented in Table 6.4-1. All of these emission factors are approximate average values intended to reflect a variety of grain types. Actual emission factors for a specific source may be considerably different, depending on the type of grain, i.e., corn, soybeans, wheat, and other factors such as grain quality.

The emission factors shown in Table 6.4-1 represent the amount of dust generated per ton of grain processed through each of the designated operations (i.e., uncontrolled emission factors). Amounts of grain processed through each of these operations in a given elevator are dependent on such factors as the amount of grain turned (interbin transfer), amount dryed, and amount cleaned, etc. Because the amount of grain passing through each operation is often difficult to determine, it may be more useful to express the emission factors in terms of the amount of grain shipped or received, assuming these amounts are about the same over the long term. Emission factors from Table 6.4-1 have been modified accordingly and are shown in Table 6.4-2 along with the appropriate multiplier that was used as representative of typical ratios of throughput at each operation to the amount of grain shipped or received. This ratio is an approximate value based on average values for turning, cleaning, and drying in each

type of elevator. However, because operating practices in individual elevators are different, these ratios, like the basic emission factors themselves, are more valid when applied to a group of elevators rather than individual elevators.

Table 6.4-1. PARTICULATE EMISSION FACTORS FOR UNCONTROLLED GRAIN ELEVATORS EMISSION FACTOR RATING: B

Type of source	Emission factor[a]	
	lb/ton	kg/MT
Terminal elevators		
Unloaded (receiving)	1.0	0.5
Loading (shipping)	0.3	0.2
Removal from bins (tunnel belt)	1.4	1.7
Drying[b]	1.1	0.6
Cleaning[c]	3.0	1.5
Headhouse (legs)	1.5	0.8
Tripper (gallery belt)	1.0	0.5
Country elevators		
Unloading (receiving)	0.6	0.3
Loading (shipping)	0.3	0.2
Removal from bins	1.0	0.5
Drying[b]	0.7	0.4
Cleaning[c]	3.0	1.5
Headhouse (legs)	1.5	0.8
Export elevators		
Unloading (receiving)	1.0	0.5
Loading (shipping)	1.0	0.5
Removal from bins (tunnel belt)	1.4	0.7
Drying[b]	1.1	0.5
Cleaning[c]	3.0	1.5
Headhouse (legs)	1.5	0.8
Tripper (gallery belts)	1.0	0.5

[a]Emission factors are in terms of pounds of dust emitted per ton of grain processed by each operation. Most of the factors for terminal and export elevators are based on Reference 1. Emission factors for drying are based on References 2 and 3. The emission factors for country elevators are based on Reference 1 and specific country elevator test data in References 4 through 9.

[b]Emission factors for drying are based on 1.8 lb/ton for rack dryers and 0.3 lb/ton for column dryers prorated on the basis of distribution of these two types of dryers in each elevator category, as discussed in Reference 3.

[c]Emission factor of 3.0 for cleaning is an average value which may range from <0.5 for wheat up to 6.0 for corn.

The factors in Tables 6.4-1 or 6.4-2 should not be added together in an attempt to obtain a single emission factor value for grain elevators because in most elevators some of the operations are equipped with control devices and some are not. Therefore, any estimation of emissions must be directed to each operation and its associated control device, rather than the elevator as a whole, unless the purpose was to estimate total potential (i.e., uncontrolled) emissions. An example of the use of emission factors in making an emission inventory is contained in Reference 3.

Table 6.4-2. PARTICULATE EMISSION FACTORS FOR GRAIN ELEVATORS BASED ON AMOUNT OF GRAIN RECEIVED OR SHIPPED[a]

Type of source	Emission factor, lb/ton processed	×	Typical ratio of tons processed to tons received or shipped[d]	=	Emission factor, lb/ton received or shipped
Terminal elevators					
Unloading (receiving)	1.0		1.0		1.0
Loading (shipping)	0.3		1.0		0.3
Removal from bins (tunnel belt)	1.4		2.0		2.8
Drying[b]	1.1		0.1		0.1
Cleaning[c]	3.0		0.2		0.6
Headhouse (legs)	1.5		3.0		4.5
Tripper (gallery belt)	1.0		1.7		1.7
Country elevators					
Unloading (receiving)	0.6		1.0		0.6
Loading (shipping)	0.3		1.0		0.3
Removal from bins	1.0		2.1		2.1
Drying[b]	0.7		0.3		0.2
Cleaning[c]	3.0		0.1		0.3
Headhouse (legs)	1.5		3.1		4.7
Export elevators					
Unloading (receiving)	1.0		1.0		1.0
Loading (shipping)	1.0		1.0		1.0
Removal from bins (tunnel belt)	1.4		1.2		1.7
Drying[b]	1.1		0.01		0.01
Cleaning[c]	3.0		0.2		0.6
Headhouse (legs)	1.5		2.2		3.3
Tripper (gallery belt)	1.0		1.1		1.1

[a]Assume that over the long term the amount received is approximately equal to amount shipped.

[b]See Note[b] in Table 6.4-1.

[c]See Note[c] in Table 6.4-1.

[d]Ratios shown are average values taken from a survey of many elevators across the U.S.[3] These ratios can be considerably different for any individual elevator or group of elevators in the same locale.

Some of the operations listed in the table, such as the tunnel belt and belt tripper, are internal or in-house dust sources which, if uncontrolled, might show lower than expected atmospheric emissions because of internal settling of dust. The reduction in emissions via internal settling is not known, although it is possible that all of this dust is eventually emitted to the atmosphere due to subsequent external operations, internal ventilation, or other means.

Many elevators utilize control devices on at least some operations. In the past, cyclones have commonly been applied to legs in the headhouse and tunnel belt hooding systems. More recently, fabric filters have been utilized at many elevators on almost all types of operations. Unfortunately, some sources in grain elevators present control problems. Control of loadout operations is difficult because of the problem of containment of the emissions. Probably the most difficult operation to control, because of the large flow rate and high moisture content of the exhaust gases, is the dryers. Screenhouses or continuously vacuumed screen systems are available for reducing dryer emissions and have been applied at several facilities. Detailed descriptions of dust control systems for grain elevator operations are contained in Reference 2.

6.4.2.2 Grain Processing Operations - Grain processing operations include many of the operations performed in a grain elevator in addition to milling and processing of the grain. Emission factors for different grain milling and processing operations are presented in Table 6.4-3. Brief discussions of these different operations and the methods used for arriving at the emission factor values shown in Table 6.4-3 are presented below.

Table 6.4-3. PARTICULATE EMISSION FACTORS FOR GRAIN PROCESSING OPERATIONS[1,2,3]
EMISSION FACTOR RATING: D

Type of source	Emission factor[a,b] (uncontrolled except where indicated) lb/ton	kg/MT
Feed mills		
Receiving	1.30	0.65
Shipping	0.50	0.25
Handling	3.00	1.50
Grinding	0.10[c]	0.05[c]
Pellet coolers	0.10[c]	0.05[c]
Wheat mills		
Receiving	1.00	0.50
Precleaning and handling	5.00	2.50
Cleaning house	-	-
Millhouse	70.00	35.00
Durum mills		
Receiving	1.00	0.50
Precleaning and handling	5.00	2.50
Cleaning house	-	-
Millhouse	-	-
Rye milling		
Receiving	1.00	0.50
Precleaning and handling	5.00	2.50
Cleaning house	-	-
Millhouse	70.00	35.00
Dry corn milling		
Receiving	1.00	0.50
Drying	0.50	0.25
Precleaning and handling	5.00	2.50
Cleaning house	6.00	3.00
Degerming and milling	-	-
Oat milling		
Total	2.50[d]	1.25[d]
Rice milling		
Receiving	0.64	0.32
Handling and precleaning	5.00	2.50
Drying	-	-
Cleaning and millhouse	-	-
Soybean mills		
Receiving	1.60	0.80
Handling	5.00	2.50
Cleaning	-	-
Drying	7.20	3.60
Cracking and dehulling	3.30	1.65
Hull grinding	2.00	1.00

Table 6.4-3 (continued). PARTICULATE EMISSION FACTORS FOR GRAIN PROCESSING OPERATIONS[1,2,3]
EMISSION FACTOR RATING: D

Type of source	Emission factor[a,b] (uncontrolled except where indicated) lb/ton	kg/MT
Bean conditioning	0.10	0.05
Flaking	0.57	0.29
Meal dryer	1.50	0.75
Meal cooler	1.80	0.90
Bulk loading	0.27	0.14
Corn wet milling		
Receiving	1.00	0.50
Handling	5.00	2.50
Cleaning	6.00	3.00
Dryers	-	-
Bulk loading	-	-

[a]Emission factors are expressed in terms of pounds of dust emitted per ton of grain entering the plant (i.e., received), which is not necessarily the same as the amount of material processed by each operation.

[b]Blanks indicate insufficient information.

[c]Controlled emission factor (controlled with cyclones).

[d]Controlled emission factor.(This represents several sources in one plant; some controlled with cyclones and others controlled with fabric filters.)

Emission factor data for feed mill operations are sparse. This is partly due to the fact that many ingredients, whole grain and other dusty materials (bran, dehydrated alfalfa, etc.), are received by both truck and rail and several unloading methods are employed. However, because some feed mill operations (handling, shipping, and receiving) are similar to operations in a grain elevator, an emission factor for each of these different operations was estimated on that basis. The remaining operations are based on information in Reference 2.

Three emission areas for wheat mill processing operations are grain receiving and handling, cleaning house, and milling operations. Data from Reference 1 are used to estimate emissions factors for grain receiving and handling. Data for the cleaning house are insufficient to estimate an emission factor, and information contained in Reference 2 is used to estimate the emission factor for milling operations. The large emission factor for the milling operation is somewhat misleading because almost all of the sources involved are equipped with control devices to prevent product losses; fabric filters are widely used for this purpose.

Operations for durum mills and rye milling are similar to those of wheat milling. Therefore, most of these emission factors are assumed equal to those for wheat mill operations.

The grain unloading, handling, and cleaning operations for dry corn milling are similar to those in other grain mills, but the subsequent operations are somewhat different. Also, some drying of corn received at the mill may be necessary prior to storage. An estimate of the emission factor for drying is obtained from Reference 2. Insufficient information is available to estimate emission factors for degerming and milling.

Information necessary to estimate emissions from oat milling is unavailable, and no emission factor for another grain is considered applicable because oats are reported to be dustier than many other grains. The only emission factor data available are for controlled emissions.[2] An overall controlled emission factor of 2.5 lb/ton is calculated from these data.

Emission factors for rice milling are based on those for similar operations in other grain handling facilities. Insufficient information is available to estimate emission factors for drying, cleaning, and mill house operations.

Information contained in Reference 2 is used to estimate emission factors for soybean mills.

Emissions information on corn wet-milling is unavailable in most cases due to the wide variety of products and the diversity of operations. Receiving, handling, and cleaning operations emission factors are assumed to be similar to those for dry corn milling.

Many of the operations performed in grain milling and processing plants are the same as those in grain elevators, so the control methods are similar. As in the case of grain elevators, these plants often use cyclones or fabric filters to control emissions from the grain handling operations (e.g., unloading, legs, cleaners, etc.). These same devices are also often used to control emissions from other processing operations; a good example of this is the extensive use of fabric filters in flour mills. However, there are also certain operations within some milling operations that are not amenable to use of these devices. Therefore, wet scrubbers have found some application, particularly where the effluent gas stream has a high moisture content. Certain other operations have been found to be especially difficult to control, such as rotary dryers in wet corn mills. Descriptions of the emission control systems that have been applied to operations within the grain milling and processing industries are contained in Reference 2.

This section was prepared for EPA by Midwest Research Institute.[10]

References for Section 6.4

1. Gorman, P.G. Potential Dust Emission from a Grain Elevator in Kansas City, Missouri. Prepared by Midwest Research Institute for Environmental Protection Agency, Research Triangle Park, N.C. under Contract No. 68-02-0228, Task Order No. 24. May 1974.

2. Shannon, L.J. et al. Emission Control in the Grain and Feed Industry, Volume I - Engineering and Cost Study. Final Report. Prepared for Environmental Protection Agency by Midwest Research Institute. Document No. EPA-450/3-73-003a. Research Triangle Park, N.C. December 1973.

3. Shannon, L.J. et al. Emission Control in the Grain and Feed Industry, Volume II - Emission Inventory. Final Report. Prepared by Midwest Research Institute for Environmental Protection Agency, Research Triangle Park, N.C. Report No. EPA-450/3-73-003b. September 1974

4. Maxwell, W.H. Stationary Source Testing of a Country Grain Elevator at Overbrook, Kansas. Prepared by Midwest Research Institute for Environmental Protection Agency under EPA Contract No. 68-02-1403. Research Triangle Park, N.C. February 1976.

5. Maxwell, W.H. Stationary Source Testing of a Country Grain Elevator at Great Bend, Kansas. Prepared by Midwest Research Institute for Environmental Protection Agency under EPA Contract No. 68-02-1403. Research Triangle Park, N.C. April 1976.

6. Belgea, F.J. Cyclone Emissions and Efficiency Evaluation. Report submitted to North Dakota State Department of Health on tests at an elevator in Edenburg, North Dakota, by Pollution Curbs, Inc. St. Paul, Minnesota. March 10, 1972.

7. Trowbridge, A.L. Particulate Emission Testing - ERC Report No. 4-7683. Report submitted to North Dakota State Department of Health on tests at an elevator in Egeland, North Dakota, by Environmental Research Corporation. St. Paul, Minnesota. January 16, 1976.

8. Belgea, F.J. Grain Handling Dust Collection Systems Evaluation for Farmers Elevator Company, Minot, North Dakota. Report submitted to North Dakota State Department of Health, by Pollution Curbs, Inc. St. Paul, Minnesota. August 28, 1972.

9. Belgea, F.J. Cyclone Emission and Efficiency Evaluation. Report submitted to North Dakota State Department of Health on tests at an elevator in Thompson, North Dakota, by Pollution Curbs, Inc. St. Paul, Minnesota. March 10, 1972.

10. Schrag, M.P. et al. Source Test Evaluation for Feed and Grain Industry. Prepared by Midwest Research Institute, Kansas City, Mo., for Environmental Protection Agency, Research Triangle Park, N.C., under Contract No. 68-02-1403, Task Order No. 28. December 1976. Publication No. EPA-450/3-76-043.

6.5 FERMENTATION

6.5.1 Process Description[1]

For the purpose of this report only the fermentation industries associated with food will be considered. This includes the production of beer, whiskey, and wine.

The manufacturing process for each of these is similar. The four main brewing production stages and their respective sub-stages are: (1) brewhouse operations, which include (a) malting of the barley, (b) addition of adjuncts (corn, grits, and rice) to barley mash, (c) conversion of starch in barley and adjuncts to maltose sugar by enzymatic processes, (d) separation of wort from grain by straining, and (e) hopping and boiling of the wort; (2) fermentation, which includes (a) cooling of the wort, (b) additional yeast cultures, (c) fermentation for 7 to 10 days, (d) removal of settled yeast, and (e) filtration and carbonation; (3) aging, which lasts from 1 to 2 months under refrigeration; and (4) packaging, which includes (a) bottling-pasteurization, and (b) racking draft beer.

The major differences between beer production and whiskey production are the purification and distillation necessary to obtain distilled liquors and the longer period of aging. The primary difference between wine making and beer making is that grapes are used as the initial raw material in wine rather than grains.

Table 6.5-1. EMISSION FACTORS FOR FERMENTATION PROCESSES
EMISSION FACTOR RATING: E

Type of product	Particulates		Hydrocarbons	
	lb/ton	kg/MT	lb/ton	kg/MT
Beer				
Grain handling[a]	See Subsection 6.5.1			
Drying spent grains, etc.[a]				
Whiskey				
Grain handling[a]	3	1.5	–	–
Drying spent grains, etc.[a]	5	2.5	NA	NA
Aging	–	–	10[c]	0.024[d]
Wine	See Subsection 6.5.2			

[a]Based on section on grain processing.
[b]No emission factor available, but emissions do occur.
[c]Pounds per year per barrel of whiskey stored.[2]
[d]Kilograms per year per liter of whiskey stored.
[e]No significant emissions.

References for Section 6.5

1. Air Pollutant Emission Factors. Final Report. Resources Research, Inc. Reston, Va. Prepared for National Air Pollution Control Administration, Durham, N.C., under Contract Number CPA-22-69-119. April 1970.

2. Shreve, R.N. Chemical Process Industries, 3rd Ed. New York, McGraw-Hill Book Company. 1967. p. 591-608.

6.5.1. BEER MAKING

6.5.1.1 General[1-3]

Beer is a beverage of low alcoholic content (2 - 7 percent) made by the fermentation of malted starchy cereal grains. Barley is the principal grain used. The production of beer is carried out in four major stages, brewhouse operations, fermentation, aging and packaging. These processes are shown in Figure 6.5.1-1.

Brewhouse operations include malting of the barley, addition of adjuncts to the barley mash, conversion of the starch in the barley and adjuncts to maltose sugar, separation of wort from the grain, and hopping and boiling of the wort.

In malting, barley is continuously moistened to cause it to germinate. With germination, enzymes are formed which break down starches and proteins to less complex water soluble compounds. The malted barley is dried to arrest the enzyme formation and is ground in a malt or roll mill. Adjuncts, consisting of other grains (ground and unmalted), sugars and syrups, are added to the ground malted barley and, with a suitable amount of water, are charged to the mash tun (tank-like vessel). Conversion of the complex carbohydrates (starch and sugars) and proteins to simpler water soluble fermentable compounds by means of enzyme action takes place in the mash tun, a process called mashing. The mash is sent to a filter press or straining tub (lauter tun) where the wort (unfermented beer) is separated from the spent grain solids. Hops are added to the wort in a brew kettle, where the wort is boiled one and a half to three hours to extract essential substances from the hops, to concentrate the wort, and to destroy the malt enzymes. The wort is strained to remove hops, and sludge is removed by a filter or centrifuge.

Wort is cooled to 10°C (50°F) or lower. During cooling, it absorbs air necessary to start fermentation. The yeast is added and mixed with the wort in line to the fermentation starter tanks. Fermentation, the conversion of the simple sugars in the wort to ethanol and carbon dioxide, is completed in a closed fermenter. The carbon dioxide gas released by the fermentation is collected and later used for carbonating the beer. Cooling to maintain proper fermentation temperature is required because the reaction is exothermic.

After fermentation is complete, beer is stored to age for several weeks at 0°C (32°F) in large closed tanks. It is recarbonated, pumped through a pulp filter, pasteurized at 60°C (140°F) to make it biologically stable, and packaged in bottles and cans. Beer put in kegs for draft sale is not pasteurized.

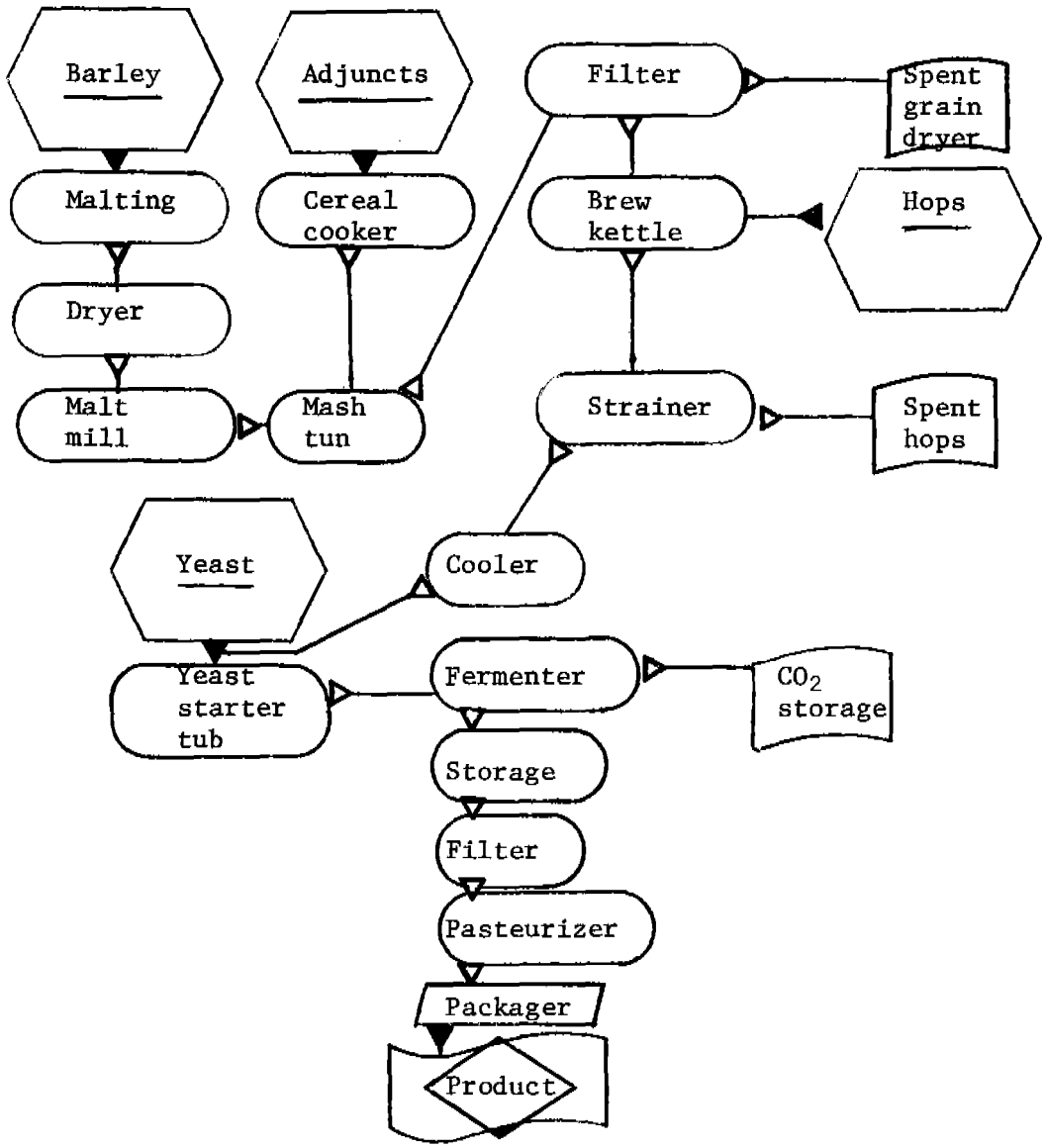

Figure 6.5.1-1. Flow diagram of a beer making process.

6.5.1.2 Emissions and Controls[2-7]

The major emissions from beer making and their sources are particulates and volatile organics, mainly ethanol, from spent grain drying, and particulates from grain handling. Volatile organics (VOC) from fermentation are negligible, and they are fugitive because the fermenters are closed to provide for collecting carbon dioxide. Other brewery processes are minor sources of volatile organics, ethanol and related compounds, such as boiling

wort in the brew kettle and malt drying. An estimate of these emissions is not available.

Fugitive particulate emissions from grain handling and milling at breweries are reduced by operating in well ventilated, low pressure conditions. At grain handling and milling operations, fabric filters are most often used for dust collection. Organics and organic particulate matter from spent grain drying can be controlled by mixing the dryer exhaust with the combustion air of a boiler. A centrifugal fan wet scrubber is the most commonly used control.

TABLE 6.5.1-1. EMISSION FACTORS FOR BEER BREWING[a]

EMISSION FACTOR RATING: D

Source	Particulate	Volatile Organic Compounds
Grain handling	1.5 (3)[b]	
Brew kettle		NA[c]
Spent grain drying	2.5 (5)[b]	1.31 (2.63)[d]
Cooling units		NA[c]
Fermentation		Neg[e]

[a]Expressed in terms of kg/10^6g (lb/ton) of grain handled. Blanks indicate no emissions.
[b]Reference 6.
[c]Factors not available, but negligible amounts of ethanol emissions are suspected.
[d]Reference 4. Mostly ethanol.
[e]Negligible amounts of ethanol, ethyl acetate, isopropyl alcohol, n-propyl alcohol, isoamyl alcohol, and isoamyl acetate emissions are suspected.

References for Section 6.5.1

1. H.E. Høyrup, "Beer and Brewing", Kirk-Othmer Encyclopedia of Chemical Technology, Volume 3, John Wiley and Sons, Inc., New York, 1964, pp. 297-338.

2. R. Norris Shreve, Chemical Process Industries, 3rd Ed., McGraw-Hill Book Company, New York, 1967, pp. 603-605.

3. E.C. Cavanaugh, et al., Hydrocarbon Pollutants from Stationary Sources, EPA-600/7-77-110, U.S. Environmental Protection Agency, Research Triangle Park, NC, September 1977.

4. H.W. Bucon, et al., Volatile Organic Compound (VOC) Species Data Manual, Second Edition, EPA-450/4-80-015, U.S. Environmental Protection Agency, Research Triangle Park, NC, December 1978.

5. Melvin W. First, et al., "Control of Odors and Aerosols from Spent Grain Dryers", Journal of the Air Pollution Control Association, 24(7): 653-659, July 1974.

6. AEROS Manual Series, Volume V: AEROS Manual of Codes, EPA-450/2-76-005, U.S. Environmental Protection Agency, Research Triangle Park, NC, April 1976.

7. Peter N. Formica, Controlled and Uncontrolled Emission Rates and Applicable Limitations for Eighty Processes, EPA-340/1-78-004, U.S. Environmental Protection Agency, Research Triangle Park, NC, April 1978.

6.5.2 WINE MAKING

6.5.2.1 General[1-4]

Wine is made by the fermentation of the juice of certain fruits, chiefly grapes. The grapes are harvested when the sugar content is right for the desired product, generally around 20 percent sugar by weight. The industry term for grape sugar content is Degrees Brix, with 1 °Brix equal to 1 gram of sugar per 100 grams of juice.

The harvested grapes are stemmed and crushed, and the juice is extracted. Sulfurous acid, potassium metabisulfite or liquefied SO_2 is used to produce 50 to 200 mg of SO_2, which is added to inhibit the growth of undesirable bacteria and yeasts. For the making of a white wine, the skins and solids are removed from the juice before fermentation. For a red wine, the skins and solids, which color the wine, are left in the juice through the fermentation stage. The pulpy mixture of juice, skins and solids is called a "must".

White wine is generally fermented at about 52°F (11°C), and red wine at about 80°F (27°C). Fermentation takes a week to ten days for white wine and about two weeks for red. Fermentation is conducted in tanks ranging in size from several thousand gallons to larger than 500,000 gallons.

The sugar of the fruit juice is converted into ethanol by the reaction:

$$\underset{\text{(sugar)}}{C_6H_{12}O_6} \rightarrow \underset{\text{(ethanol)}}{2\ C_2H_5OH} + 2\ CO_2$$

This process takes place in the presence of a specially cultivated yeast. Theoretically, the yield of ethanol should be 51.1 percent by weight of the initial sugar. The actual yield is found to be around 47 percent. The remaining sugar is lost as alcohol or byproducts of complex chemical mechanisms, or it remains in the wine as the result of incomplete fermentation.

When fermentation is complete, the wine goes through a finishing process for clarification. Common clarification procedures are filtration, fining refrigeration, pasteurization and aging. The wine is then bottled, corked or capped, labeled and cased. The finer red and white table wines are aged in the bottle.

6.5.2.2 Emissions and Controls[1,2]

Large amounts of CO_2 gas are liberated by the fermentation process. The gas is passed into the atmosphere through a vent in the top of the tank. Ethanol losses occur chiefly as a result of entrainment in the

CO_2. Factors which affect the amount of ethanol lost during fermentation are temperature of fermentation, initial sugar content, and whether a juice or a must is being fermented (i.e., a white or red wine being made).

Emission factors for wine making are given in Table 6.5.2-1. These emission factors are for juice fermentation (white wine) with an initial sugar content of 20 °Brix. Emission factors are given for two temperatures commonly used for fermentation.

Table 6.5.2-1. ETHANOL EMISSION FACTORS FOR UNCONTROLLED WINE FERMENTATION

EMISSION FACTOR RATING: B

Fermentation temperature	Ethanol Emissions[a,b] $lb/10^3$ gal fermented	g/kl fermented
52°F (11.1°C)[c]	1.06	127.03
80°F (26.7°C)[c,d]	4.79	574.04
Other conditions	e	e

[a]Due primarily to entrainment in CO_2, not evaporation. H_2S, mercaptans and other componments may be emitted in limited quantities, but no test or other information is available.
[b]C_2H_5OH lost in production.
[c]References 1 and 2. For white wine with initial 20° Brix.
[d]For red wine, add correction term for must fermentation (2.4 $lb/10^3$ gal or 287.62 g/kl).
[e]See Equation 1.

Emission factors for wines produced under other conditions can be approximated with the following equation:

$$EF = [0.136T - 5.91] + [(B - 20.4)(T - 15.21)(0.00685)] + [C] \quad (1)$$

where: EF = emission factor, pounds of ethanol lost per thousand gallons of wine made

T = fermentation temperature, °F

B = initial sugar content, °Brix

C = correction term, 0 (zero) for white wine or 2.4 $lb/10^3$ gal for red wine

Although no testing has been done on emissions from wine fermentation without grapes, it is expected that ethanol is also emitted from these operations.

There is potential alcohol loss at various working and storage stages in the production process. Also, fugitive alcohol emissions could occur from disposal of fermentation solids. Ethanol is considered to be a reactive precursor of photochemical oxidants (ozone). Emissions would be highest during the middle of the fermentation season and would taper off towards the end. Since wine facilities are concentrated in certain areas, these areas would be more affected.

Currently, the wine industry uses no means to control the ethanol lost during fermentation.

References for Section 6.5.2

1. Source Test Report and Evaluation on Emissions from a Fermentation Tank at E. & J. Gallo Winery, C-8-050, California Air Resources Board, Sacramento, CA, October 31, 1978.

2. H. W. Zimmerman, et al., "Alcohol Losses from Entrainment in Carbon Dioxide Evolved during Fermentation", American Journal of Enology, 15:63-68, 1964.

3. R. N. Shreve, Chemical Process Industries, 3rd Ed., McGraw-Hill Book Company, New York, 1967, pp. 591-608.

4. M. A. Amerine, "Wine", Kirk-Othmer Encyclopedia of Chemical Technology, Volume 22, John Wiley and Sons, Inc., New York, 1970, pp. 307-334.

6.6 FISH PROCESSING

6.6.1 Process Description

Fish processing includes the canning of fish and the manufacturing of by-products such as fish oil and fish meal. The manufacturing of fish oil and fish meal are known as reduction processes. A generalized fish processing operation is presented in Figure 6.6-1.

Two types of canning operations are used. One is the "wet fish" method in which trimmed and eviscerated fish are cooked directly in open cans. The other operation is the "pre-cooked" process in which eviscerated fish are cooked whole and portions are hand selected and packed into cans. The pre-cooked process is used primarily for larger fish such as tuna.

By-product manufacture of rejected whole fish and scrap requires several steps. First, the fish scrap mixture from the canning line is charged to a live steam cooker. After the material leaves the cooker, it is pressed to remove water and oil. The resulting press cake is broken up and dried in a rotary drier.

Two types of driers are used to dry the press cake: direct-fired and steam-tube driers. Direct-fired driers contain a stationary firebox ahead of the rotating section. The hot products of combustion from the firebox are mixed with air and wet meal inside the rotating section of the drier. Exhaust gases are generally vented to a cyclone separator to recover much of the entrained fish meal product. Steam-tube driers contain a cylindrical bank of rotating tubes through which hot, pressurized steam is passed. Heat is indirectly transferred to the meal and the air from the hot tubes. As with direct-fired driers, the exhaust gases are vented to a cyclone for product recovery.

6.6.2 Emissions and Controls

Although smoke and dust can be a problem, odors are the most objectionable emissions from fish processing plants. By-product manufacture results in more of these odorous contaminants than cannery operations because of the greater state of decomposition of the materials processed. In general, highly decayed feedstocks produce greater concentrations of odors than do fresh feedstocks.

The largest odor sources are the fish meal driers. Usually, direct-fired driers emit more odors than steam-tube driers. Direct-fired driers will also emit smoke, particularly if the driers are operated under high temperature conditions. Cyclones are frequently employed on drier exhaust gases for product recovery and particulate emission control.

Odorous gases from reduction cookers consist primarily of hydrogen sulfide [H_2S] and trimethylamine [$(CH_3)_3N$]. Odors from reduction cookers are emitted in volumes appreciably less than from fish meal driers. There are virtually no particulate emissions from reduction cookers.

Some odors are also produced by the canning processes. Generally, the pre-cooked process emits less odorous gases than the wet-fish process. This is because in the pre-cooked process, the odorous exhaust gases are trapped in the cookers, whereas in the wet-fish process, the steam and odorous offgases are commonly vented directly to the atmosphere.

Fish cannery and fish reduction odors can be controlled with afterburners, chlorinator-scrubbers, and condensers. Afterburners are most effective, providing virtually 100 percent odor control; however they are costly from a fuel-use standpoint. Chlorinator-scrubbers have been found to be 95 to 99 percent effective in controlling odors from cookers and driers. Condensers are the least effective control device. Generally, centrifugal collectors are satisfactory for controlling excessive dust emissions from driers.

Emission factors for fish processing are presented in Table 6.6-1.

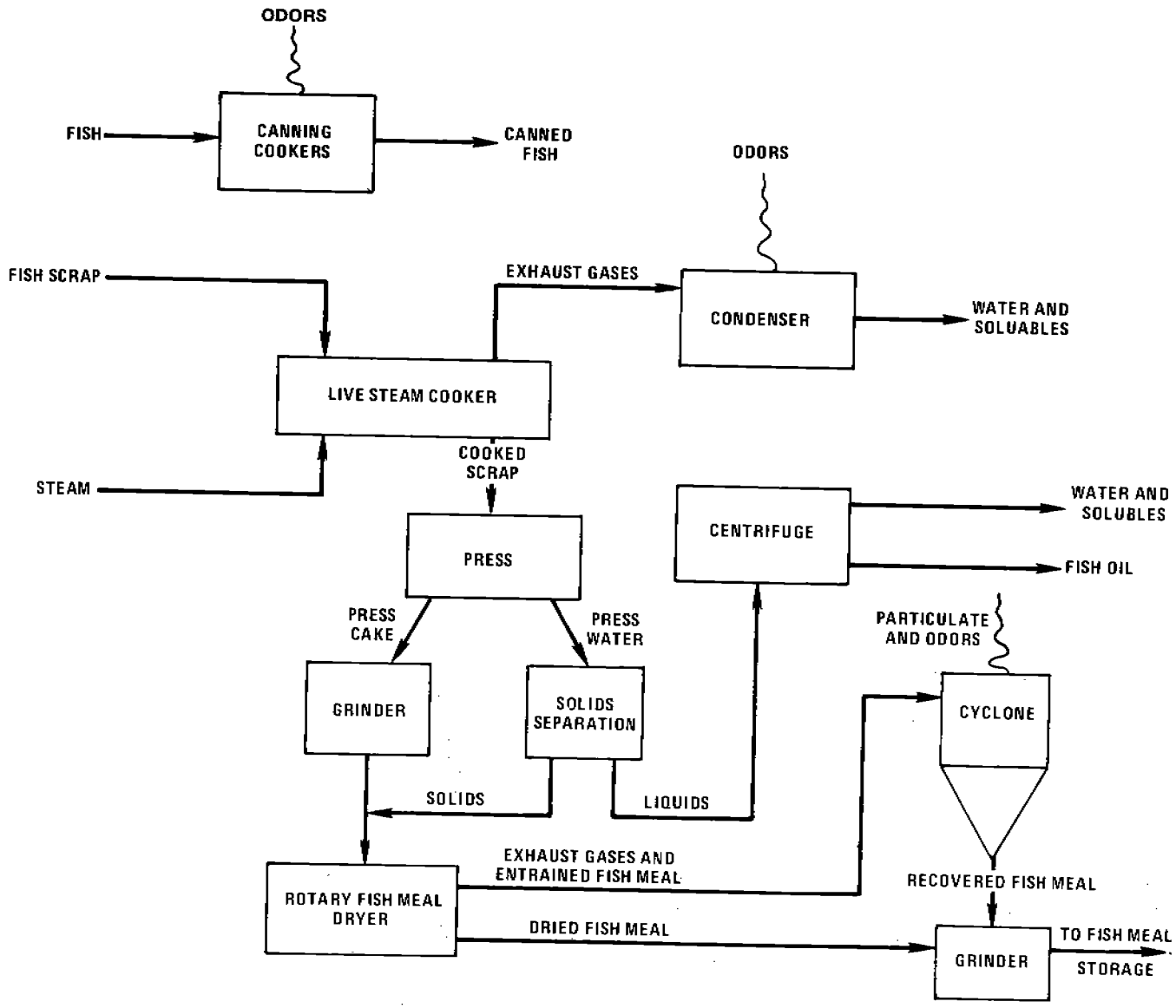

Figure 6.6-1. A generalized fish processing flow diagram.

TABLE 6.6-1. EMISSION FACTORS FOR FISH PROCESSING PLANTS

EMISSION FACTOR RATING: C

Emission source	Particulates		Trimethylamine $[(CH_3)_3N]$		Hydrogen sulfide $[H_2S]$	
	kg/Mg	lb/ton	kg/Mg	lb/ton	kg/Mg	lb/ton
Cookers, canning	Neg[a]	Neg[a]	NA[b]	NA[b]	NA[b]	NA[b]
Cookers, fish scrap						
Fresh fish	Neg[a]	Neg[a]	0.15[c]	0.3[c]	0.005[c]	0.01[c]
Stale fish	Neg[a]	Neg[a]	1.75[c]	3.5[c]	0.10[c]	0.2[c]
Steam tube dryers	2.5	5[d]	NA[d]	NA[d]	NA[d]	NA[d]
Direct fired dryers	4[d]	8[d]	NA[d]	NA[d]	NA[d]	NA[d]

[a]Reference 1. Factors are for uncontrolled emissions, before cyclone. Neg = negligible. NA = not available.
[b]Although it is known that odors are emitted from canning cookers, quantitative estimates are not available.
[c]Reference 2.
[d]Reference 1.

References for Section 6.6

1. Air Pollution Engineering Manual, Second Edition, AP-40, U. S. Environmental Protection Agency, Research Triangle Park, NC, May 1973. Out of Print.

2. W. Summer, Methods of Air Deodorization, New York, Elsevier Publishing Company, 1963.

6.7 MEAT SMOKEHOUSES

6.7.1 Process Description[1]

Smoking is a diffusion process in which food products are exposed to an atmosphere of hardwood smoke, causing various organic compounds to be absorbed by the food. Smoke is produced commerically in the United States by three major methods: (1) by burning dampened sawdust (20 to 40 percent moisture), (2) by burning dry sawdust (5 to 9 percent moisture) continuously, and (3) by friction. Burning dampened sawdust and kiln-dried sawdust are the most widely used methods. Most large, modern, production meat smokehouses are the recirculating type, in which smoke is circulated at reasonably high temperatures throughout the smokehouse.

6.7.2 Emissions and Controls[1]

Emissions from smokehouses are generated from the burning hardwood rather than from the cooked product itself. Based on approximately 110 pounds of meat smoked per pound of wood burned (110 kilograms of meat per kilogram of wood burned), emission factors have been derived for meat smoking and are presented in Table 6.7-1.

Emissions from meat smoking are dependent on several factors, including the type of wood, the type of smoke generator, the moisture content of the wood, the air supply, and the amount of smoke recirculated. Both low-voltage electrostatic precipitators and direct-fired afterburners may be used to reduce particulate and organic emissions. These controlled emission factors have also been shown in Table 6.7-1.

Table 6.7-1. EMISSION FACTORS FOR MEAT SMOKING[a,b]
EMISSION FACTOR RATING: D

Pollutant	Uncontrolled		Controlled[c]	
	lb/ton of meat	kg/MT of meat	lb/ton of meat	kg/MT of meat
Particulates	0.3	0.15	0.1	0.05
Carbon monoxide	0.6	0.3	Neg[d]	Neg
Hydrocarbons (CH_4)	0.07	0.035	Neg	Neg
Aldehydes (HCHO)	0.08	0.04	0.05	0.025
Organic acids (acetic)	0.2	0.10	0.1	0.05

[a]Based on 110 pounds of meat smoked per pound of wood burned (110 kg meat/kg wood burned).
[b]References 2, 3, and section on charcoal production.
[c]Controls consist of either a wet collector and low-voltage precipitator in series or a direct-fired afterburner.
[d]With afterburner.

References for Section 6.7

1. Air Pollutant Emission Factors. Final Report. Resources Research, Inc. Reston, Va. Prepared for National Air Pollution Control Administration, Durham, N.C., under Contract Number CPA-22-69-119. April 1970.

2. Carter, E. Private communication between Maryland State Department of Health and Resources Research, Incorporated. November 21, 1969.

3. Polglase, W.L., H.F. Dey, and R.T. Walsh. Smokehouses. In: Air Pollution Engineering Manual. Danielson, J. A. (ed.). U.S. DHEW, PHS, National Center for Air Pollution Control. Cincinnati, Ohio. Publication Number 999-AP-40. 1967. p. 750-755.

6.8 AMMONIUM NITRATE

6.8.1 General[1-2]

Ammonium nitrate (NH_4NO_3) is produced by neutralizing nitric acid with ammonia. The reaction can be carried out at atmospheric pressure or at pressures up to 410 kPa (45 psig) and at temperatures between 405 and 458K (270 - 365°F). An 83 weight percent solution of ammonium nitrate product is produced when concentrated nitric acid (56 - 60 weight percent) is combined with gaseous ammonia in a ratio of from 3.55 to 3.71 to 1, by weight. When solidified, ammonium nitrate is a hygroscopic colorless solid.

Ammonium nitrate is marketed in several forms, depending upon its use. The solution formed from the neutralization of acid and ammonia may be sold as a fertilizer, generally in combination with urea. The solution may be further concentrated to form a 95 to 99.5 percent ammonium nitrate melt for use in solids formation processes. Solid ammonium nitrate may be produced by prilling, graining, granulation or crystallization. In addition, prills can be produced in either high or low density form, depending on the concentration of the melt. High density prills, granules and crystals are used as fertilizer. Ammonium nitrate grains are used solely in explosives. Low density prills can be used as either.

The process for manufacturing ammonium nitrate can contain up to seven major unit operations. These operating steps, shown in Figure 6.8-1, are solution formation or synthesis, solution concentration, solids formation, solids finishing, solids screening, solids coating, and bagging and/or bulk shipping. In some cases, solutions may be blended for marketing as liquid fertilizers.

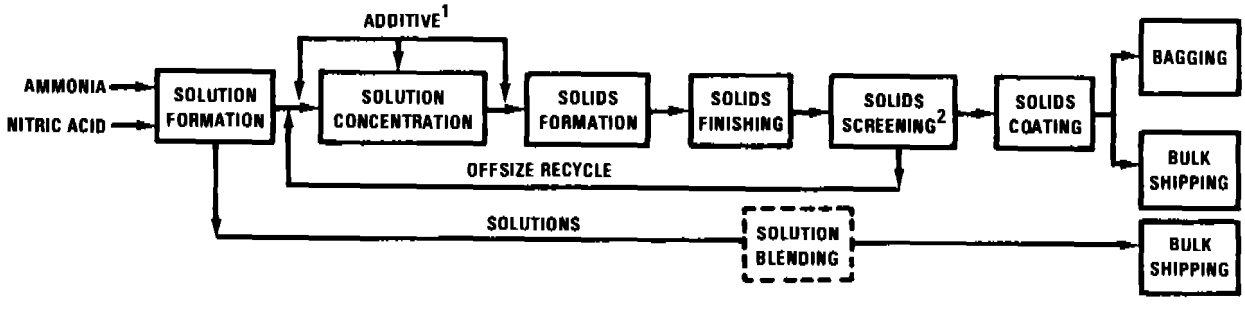

[1]ADDITIVE MAY BE ADDED BEFORE, DURING, OR AFTER CONCENTRATION
[2]SCREENING MAY BE BEFORE OR AFTER SOLIDS FINISHING

Figure 6.8-1. Ammonium nitrate manufacturing operations.

The number of operating steps employed is determined by the desired end product. For example, plants producing ammonium nitrate solutions alone use only the solution formation, solution blending and bulk shipping

operations. Plants producing a solid ammonium nitrate product can employ all of the operations.

All ammonium nitrate plants produce an aqueous ammonium nitrate solution through the reaction of ammonia and nitric acid in a neutralizer. To produce a solid product, the ammonium nitrate solution is concentrated in an evaporator or concentrator heated to drive off water. A melt is produced containing from 95 to 99.8 percent ammonium nitrate at approximately 422K (300°F). This melt is then used to make solid ammonium nitrate products.

Of the various processes used to produce solid ammonium nitrate, prilling and granulation are the most common. To produce prills, concentrated melt is sprayed into the top of a prill tower. Ammonium nitrate droplets form in the tower and fall countercurrent to a rising air stream that cools and solidifies the falling droplets into spherical prills. Prill density can be varied by using different concentrations of ammonium nitrate melt. Low density prills are formed from a 95 to 97.5 percent ammonium nitrate melt, and high density prills are formed from a 99.5 to 99.8 percent melt. High density prills are less porous than low density prills.

In the prilling process, an additive may be injected into the melt stream. This additive serves three purposes, to raise the crystalline transition temperature of the solid final product; to act as a desiccant, drawing water into the final product prills to reduce caking; and to allow prilling to be conducted at a lower temperature by reducing the freezing point of molten ammonium nitrate. Magnesium nitrate or magnesium oxide are examples of additives to the melt stream. Such additives account for 1 to 2.5 weight percent of the final product. While these additives are effective replacements for conventional coating materials, their use is not widespread in the industry.

Rotary drum granulators produce granules by spraying a concentrated ammonium nitrate melt (99.0 to 99.8 percent) onto small seed particles in a long rotating cylindrical drum. As the seed particles rotate in the drum, successive layers of ammonium nitrate are added to the particles, forming granules. Granules are removed from the granulator and screened. Offsize granules are crushed and recycled to the granulator to supply additional seed particles or are dissolved and returned to the solution process. Pan granulators operate on the same principle as drum granulators and produce a solid product with physical characteristics similar to those of drum granules, except the solids are formed in a large, rotating circular pan.

The temperature of the ammonium nitrate product exiting the solids formation process is approximately 339 - 397K (150 - 255°F). Rotary drum or fluidized bed cooling prevents deterioration and agglomeration of solids before storage and shipping. Low density prills, which have a high moisture content because of a lower melt concentration, require drying before cooling, usually in rotary drums or fluidized beds.

Since the solids are produced in a wide variety of sizes, they must be screened for consistently sized prills or granules. Cooled prills are screened, and offsize prills are dissolved and recycled to the solution concentration process. Granules are screened before cooling, undersize

particles are returned directly to the granulator, and oversize granules may be either crushed and returned to the granulator or sent to the solution concentration process.

Following screening, products can be coated in a rotary drum to prevent agglomeration during storage and shipment. The most common coating materials are clays and diatomaceous earth. However, the use of additives in the ammonium nitrate melt before prilling may preclude the use of coatings.

Solid ammonium nitrate is stored and shipped in either bulk or bags. Approximately 10 percent of solid ammonium nitrate produced in the United States is bagged.

6.8.2 Emissions and Controls

Emissions from ammonium nitrate production plants are particulate matter (ammonium nitrate and coating materials), ammonia and nitric acid. Ammonia and nitric acid are emitted primarily from solution formation and concentration processes, with ammonia also being emitted from prill towers and granulators. Particulate matter (largely as ammonium nitrate) is emitted from most of the process operations and is the primary emission addressed here.

The emission sources in solution formation and concentration processes are neutralizers and evaporators, primarily emitting nitric acid and ammonia. Specific plant operating characteristics, however, make these emissions vary depending upon use of excess ammonia or acid in the neutralizer. Since the neutralization operation can dictate the quantity of these emissions, a range of emission factors is presented in Table 6.8-1. Particulate emissions from these operations tend to be smaller in size than those from solids production and handling processes and generally are recycled back to the process.

Emissions from solids formation processes are ammonium nitrate particulate matter and ammonia. The sources of primary importance are prill towers (for high density and low density prills) and granulators (rotary drum and pan). Emissions from prill towers result from carryover of fine particles and fume by the prill cooling air flowing through the tower. These fine particles are from microprill formation, attrition of prills colliding with the tower or one another, and from rapid transition of the ammonium nitrate between crystal states. The uncontrolled particulate emissions from prill towers, therefore, are affected by tower airflow, spray melt temperature, condition and type of melt spray device, air temperature, and crystal state changes of the solid prills. The amount of microprill mass that can be entrained in the prill tower exhaust is determined by the tower air velocity. Increasing spray melt temperature causes an increase in the amount of gas phase ammonium nitrate generated. Thus, gaseous emissions from high density prilling are greater than from low density towers. Microprill formation resulting from partially plugged orifices of melt spray devices can increase fine dust loading and emissions. Certain designs (spinning buckets) and practices (vibration of spray plates) help reduce microprill formation. High ambient air temperatures can cause increased emissions because of entrainment as a

TABLE 6.8-1. EMISSION FACTORS FOR PROCESSES IN AMMONIUM NITRATE MANUFACTURING PLANTS[a]
kg/Mg (lb/ton)

Process	Particulate Matter		Ammonia		Nitric Acid	Emission Factor Rating
	Uncontrolled	Controlled[b]	Uncontrolled[c]			
Neutralizer	0.045 - 4.3 (0.09 - 8.6)	0.002 - 0.22 (0.004 - 0.43)	0.43 - 18.0	(0.86 - 36.0)	0.042 - 1[d] (0.084 - 2)[d]	B
Evaporation/concentration Operations	0.26 (0.52)	-	0.27 - 16.7	(0.54 - 33.4)	-	A
Solids Formation Operations						A
High density prill towers	1.59 (3.18)	0.60 (1.20)	28.6	(57.2)	-	
Low density prill towers	0.46 (0.92)	0.26 (0.52)	0.13	(0.26)	-	
Rotary drum granulators	146 (292)	0.22 (0.44)	29.7	(59.4)	-	
Pan granulators	1.34 (2.68)	0.02 (0.04)	0.07	(0.14)	-	
Coolers and Dryers						A
High density prill coolers[e]	0.8 (1.6)	0.01 (0.02)	0.02	(0.04)	-	
Low density prill coolers[e]	25.8 (51.6)	0.26 (0.52)	0.15	(0.30)	-	
Low density prill dryers[e]	57.2 (114.4)	0.57 (1.14)	0 - 1.59	(0 - 3.18)	-	
Rotary drum granulator coolers[e]	8.1 (16.2)	0.08 (0.16)	0.59	(1.188)	-	
Pan granulator coolers[e]	18.3 (36.6)	0.18 (0.36)	0	(0)	-	
Coating Operations[f]	≤2.0 (≤4.0)	≤0.02 (≤0.04)	-		-	B
Bulk Loading Operations[f]	≤0.01 (≤0.02)	-	-		-	B

[a]Factors are g/kg (kg/Mg) and lb/ton of ammonium nitrate fertilizer produced. Some ammonium nitrate emission factors are based on data gathered using a modification to EPA Method 5 (See Reference 1). Dash = no data.

[b]Based on the following control efficiencies for wet scrubbers, applied to uncontrolled emissions: neutralizers, 95%; high density prill towers, 62%; low density prill towers, 43%; rotary drum granulators, 99.9%; pan granulators, 98.5%; coolers, dryers and coaters, 99%.

[c]Given as ranges because of variation in data and plant operations. Factors for controlled emissions not presented due to conflicting results on control efficiency.

[d]Based on 95% recovery in a granulator recycle scrubber.

[e]Factors for coolers represent combined precooler and cooler emissions, and factors for dryers represent combined predryer and dryer emissions.

[f]Fugitive particulate emissions arise from coating and bulk loading operations.

result of the higher air flow required to cool prills and because of increased fume formation at the higher temperatures.

The granulation process in general provides a larger degree of control in product formation than does prilling. Granulation produces a solid ammonium nitrate product that, relative to prills, is larger and has greater abrasion resistance and crushing strength. The air flow in granulation processes is lower than that in prilling operations. Granulators, however, cannot produce low density ammonium nitrate economically with current technology. The design and operating parameters of granulators may affect emission rates. For example, the recycle rate of seed ammonium nitrate particles affects the bed temperature in the granulator. An increase in bed temperature resulting from decreased recycle of seed particles may cause an increase in dust emissions from granule disintegration.

Cooling and drying are usually conducted in rotary drums. As with granulators, the design and operating parameters of the rotary drums may affect the quantity of emissions. In addition to design parameters, prill and granule temperature control is necessary to control emissions from disintegration of solids caused by changes in crystal state.

Emissions from screening operations are generated by the attrition of the ammonium nitrate solids against the screens and against one another. Almost all screening operations used in the ammonium nitrate manufacturing industry are enclosed or have a cover over the uppermost screen. Screening equipment is located inside a building, and emissions are ducted from the process for recovery or reuse.

Prills and granules are typically coated in a rotary drum. The rotating action produces a uniformly coated product. The mixing action also causes some of the coating material to be suspended, creating particulate emissions. Rotary drums used to coat solid product are typically kept at a slight negative pressure, and emissions are vented to a particulate control device. Any dust captured is usually recycled to the coating storage bins.

Bagging and bulk loading operations are a source of particulate emissions. Dust is emitted from each type of bagging process during final filling when dust laden air is displaced from the bag by the ammonium nitrate. The potential for emissions during bagging is greater for coated than for uncoated material. It is expected that emissions from bagging operations are primarily the kaolin, talc or diatomaceous earth coating matter. About 90 percent of solid ammonium nitrate produced domestically is bulk loaded. While particulate emissions from bulk loading are not generally controlled, visible emissions are within typical state regulatory requirements (below 20 percent opacity).

Table 6.8-1 summarizes emission factors for various processes involved in the manufacture of ammonium nitrate. Uncontrolled emissions of particulate matter, ammonia and nitric acid are given in the Table. Emissions of ammonia and nitric acid depend upon specific operating practices, so ranges of factors are given for some emission sources.

Emission factors for controlled particulate emissions are also in Table 6.8-1, reflecting wet scrubbing particulate control techniques. The particle size distribution data presented in Table 6.8-2 indicate the applicability of wet scrubbing to control ammonium nitrate particulate emissions. In addition, wet scrubbing is used as a control technique because the solution containing the recovered ammonium nitrate can be sent to the solution concentration process for reuse in production of ammonium nitrate, rather than to waste disposal facilities.

TABLE 6.8-2. PARTICLE SIZE DISTRIBUTION DATA FOR UNCONTROLLED EMISSIONS FROM AMMONIUM NITRATE MANUFACTURING FACILITIES[a]

	CUMULATIVE WEIGHT %		
	≤ 2.5 μm	≤ 5 μm	≤ 10 μm
Solids Formation Operations			
Low density prill tower	56	73	83
Rotary drum granulator	0.07	0.3	2
Coolers and Dryers			
Low density prill cooler	0.03	0.09	0.4
Low density prill predryer	0.03	0.06	0.2
Low density prill dryer	0.04	0.04	0.15
Rotary drum granulator cooler	0.06	0.5	3
Pan granulator precooler	0.3	0.3	1.5

[a]References 4, 11-12, 22-23. Particle size determinations were not done in strict accordance with EPA Method 5. A modification was used to handle the high concentrations of soluble nitrogenous compounds (See Reference 1). Particle size distributions were not determined for controlled particulate emissions.

References for Section 6.8

1. Ammonium Nitrate Manufacturing Industry - Technical Document, EPA-450/3-81-002, U. S. Environmental Protection Agency, Research Triangle Park, NC, January 1981.

2. W. J. Search and R. B. Reznik, Source Assessment: Ammonium Nitrate Production, EPA-600/2-77-107i, U. S. Environmental Protection Agency, Research Triangle Park, NC, September 1977.

3. Memo from C. D. Anderson, Radian Corporation, Durham, NC, to Ammonium Nitrate file, July 2, 1980.

4. D. P. Becvar, et al., Ammonium Nitrate Emission Test Report: Union Oil Company of California, EMB-78-NHF-7, U. S. Environmental Protection Agency, Research Triangle Park, NC, October 1979.

5. K. P. Brockman, Emission Tests for Particulates, Cominco American, Beatrice, NE, 1974.

6. Written communication from S. V. Capone, GCA Corporation, Chapel Hill, NC, to E. A. Noble, U. S. Environmental Protection Agency, Research Triangle Park, NC, September 6, 1979.

7. Written communication from D. E. Cayard, Monsanto Agricultural Products Company, St. Louis, MO, to E. A. Noble, U. S. Environmental Protection Agency, Research Triangle Park, NC, December 4, 1978.

8. Written communication from D. E. Cayard, Monsanto Agricultural Products Company, St. Louis, MO, to E. A. Noble, U. S. Environmental Protection Agency, Research Triangle Park, NC, December 27, 1978.

9. Written communication from T. H. Davenport, Hercules Incorporated, Donora, PA, to D. R. Goodwin, U. S. Environmental Protection Agency, Research Triangle Park, NC, November 16, 1978.

10. R. N. Doster and D. J. Grove, Source Sampling Report: Atlas Powder Company, Entropy Environmentalists, Inc., Research Triangle Park, NC, August 1976.

11. M. D. Hansen, et al., Ammonium Nitrate Emission Test Report: Swift Chemical Company, EMB-79-NHF-11, U. S. Environmental Protection Agency, Research Triangle Park, NC, July 1980.

12. R. A. Kniskern, et al., Ammonium Nitrate Emission Test Report: Cominco American, Inc., Beatrice, Nebraska, EMB-79-NHF-9, U. S. Environmental Protection Agency, Research Triangle Park, NC, April 1979.

13. Written communication from J. A. Lawrence, C. F. Industries, Long Grove, IL, to D. R. Goodwin, U. S. Environmental Protection Agency, Research Triangle Park, NC, December 15, 1978.

14. Written communication from F. D. McCauley, Hercules Incorporated, Louisiana, MO, to D. R. Goodwin, U. S. Environmental Protection Agency, Research Triangle Park, October 31, 1978.

15. W. E. Misa, Report of Source Test: Collier Carbon and Chemical Corporation (Union Oil), Test No. 5Z-78-3, Anaheim, CA, January 12, 1978.

16. Written communication from L. Musgrove, Georgia Department of Natural Resources, Atlanta, GA, to R. Rader, Radian Corporation, Durham, NC, May 21, 1980.

17. Written communication from D. J. Patterson, N-ReN Corporation, Cincinnati, OH, to E. A. Noble, U. S. Environmental Protection Agency, Research Triangle Park, NC, March 26, 1979.

18. Written communication from H. Schuyten, Chevron Chemical Company, San Francisco, CA, to D. R. Goodwin, U. S. Environmental Protection Agency, March 2, 1979.

19. Emission Test Report: Phillips Chemical Company, Texas Air Control Board, Austin, TX, 1975.

20. Surveillance Report: Hawkeye Chemical Company, U. S. Environmental Protection Agency, Research Triangle Park, NC, December 29, 1976.

21. W. A. Wade and R. W. Cass, Ammonium Nitrate Emission Test Report: C. F. Industries, EMB-79-NHF-10, U. S. Environmental Protection Agency, Research Triangle Park, NC, November 1979.

22. W. A. Wade, et al., Ammonium Nitrate Emission Test Report: Columbia Nitrogen Corporation, EMB-80-NHF-16, U. S. Environmental Protection Agency, Research Triangle Park, NC, January 1981.

23. York Research Corporation, Ammonium Nitrate Emission Test Report: N-ReN Corporation, EMB-78-NHF-5, U. S. Environmental Protection Agency, Research Triangle Park, NC, May 1979.

6.9 ORCHARD HEATERS

6.9.1 General[1-6]

Orchard heaters are commonly used in various areas of the United States to prevent frost damage to fruit and fruit trees. The five common types of orchard heaters—pipeline, lazy flame, return stack, cone, and solid fuel—are shown in Figure 6.9-1. The pipeline heater system is operated from a central control and fuel is distributed by a piping system from a centrally located tank. Lazy flame, return stack, and cone heaters contain integral fuel reservoirs, but can be converted to a pipeline system. Solid fuel heaters usually consist only of solid briquettes, which are placed on the ground and ignited.

The ambient temperature at which orchard heaters are required is determined primarily by the type of fruit and stage of maturity, by the daytime temperatures, and by the moisture content of the soil and air.

During a heavy thermal inversion, both convective and radiant heating methods are useful in preventing frost damage; there is little difference in the effectiveness of the various heaters. The temperature response for a given fuel rate is about the same for each type of heater as long as the heater is clean and does not leak. When there is little or no thermal inversion, radiant heat provided by pipeline, return stack, or cone heaters is the most effective method for preventing damage.

Proper location of the heaters is essential to the uniformity of the radiant heat distributed among the trees. Heaters are usually located in the center space between four trees and are staggered from one row to the next. Extra heaters are used on the borders of the orchard.

6.9.2 Emissions[1,6]

Emissions from orchard heaters are dependent on the fuel usage rate and the type of heater. Pipeline heaters have the lowest particulate emission rates of all orchard heaters. Hydrocarbon emissions are negligible in the pipeline heaters and in lazy flame, return stack, and cone heaters that have been converted to a pipeline system. Nearly all of the hydrocarbon losses are evaporative losses from fuel contained in the heater reservoir. Because of the low burning temperatures used, nitrogen oxide emissions are negligible.

Emission factors for the different types of orchard heaters are presented in Table 6.9-1 and Figure 6.9-2.

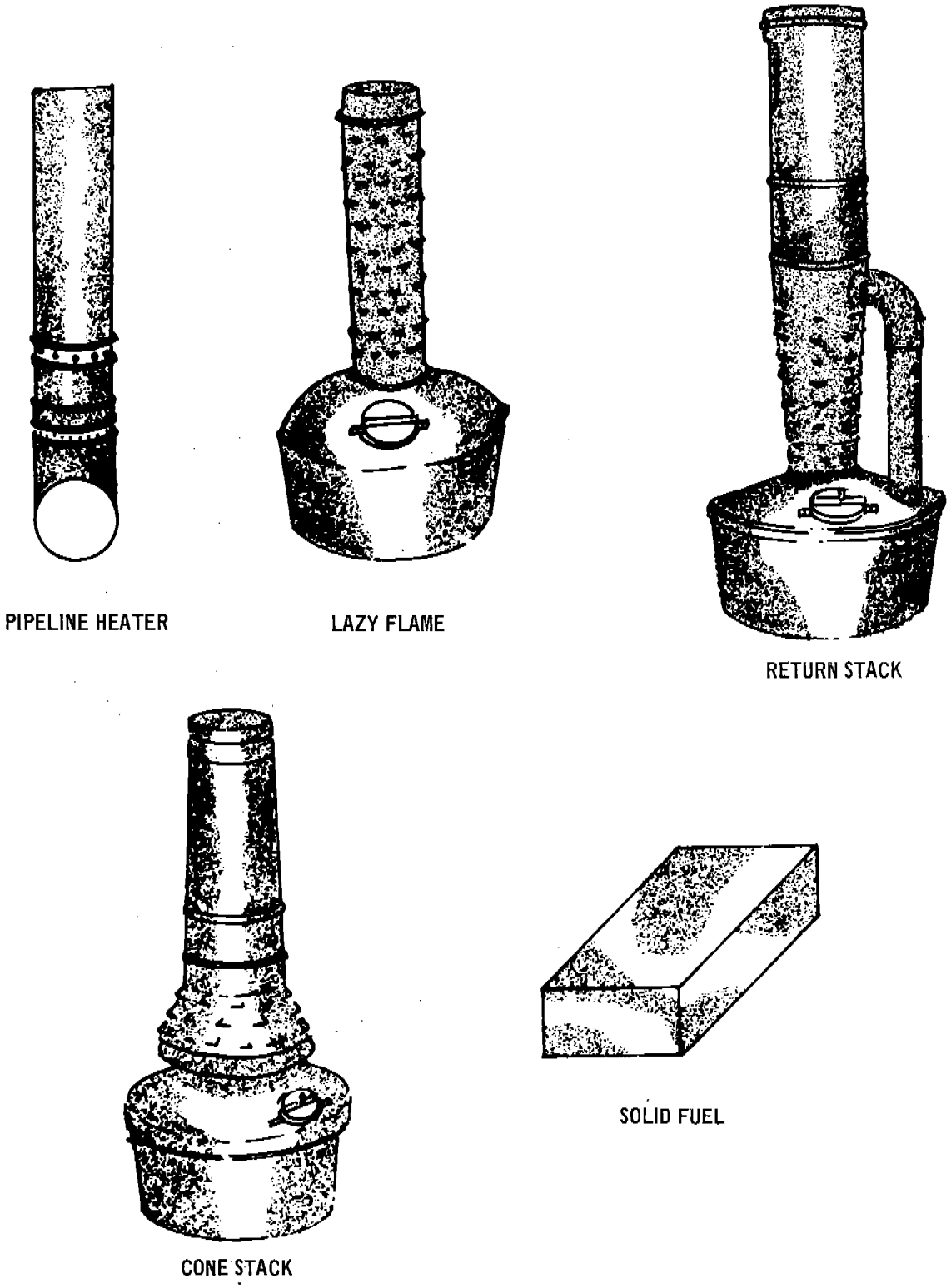

Figure 6.9-1. Types of orchard heaters.[6]

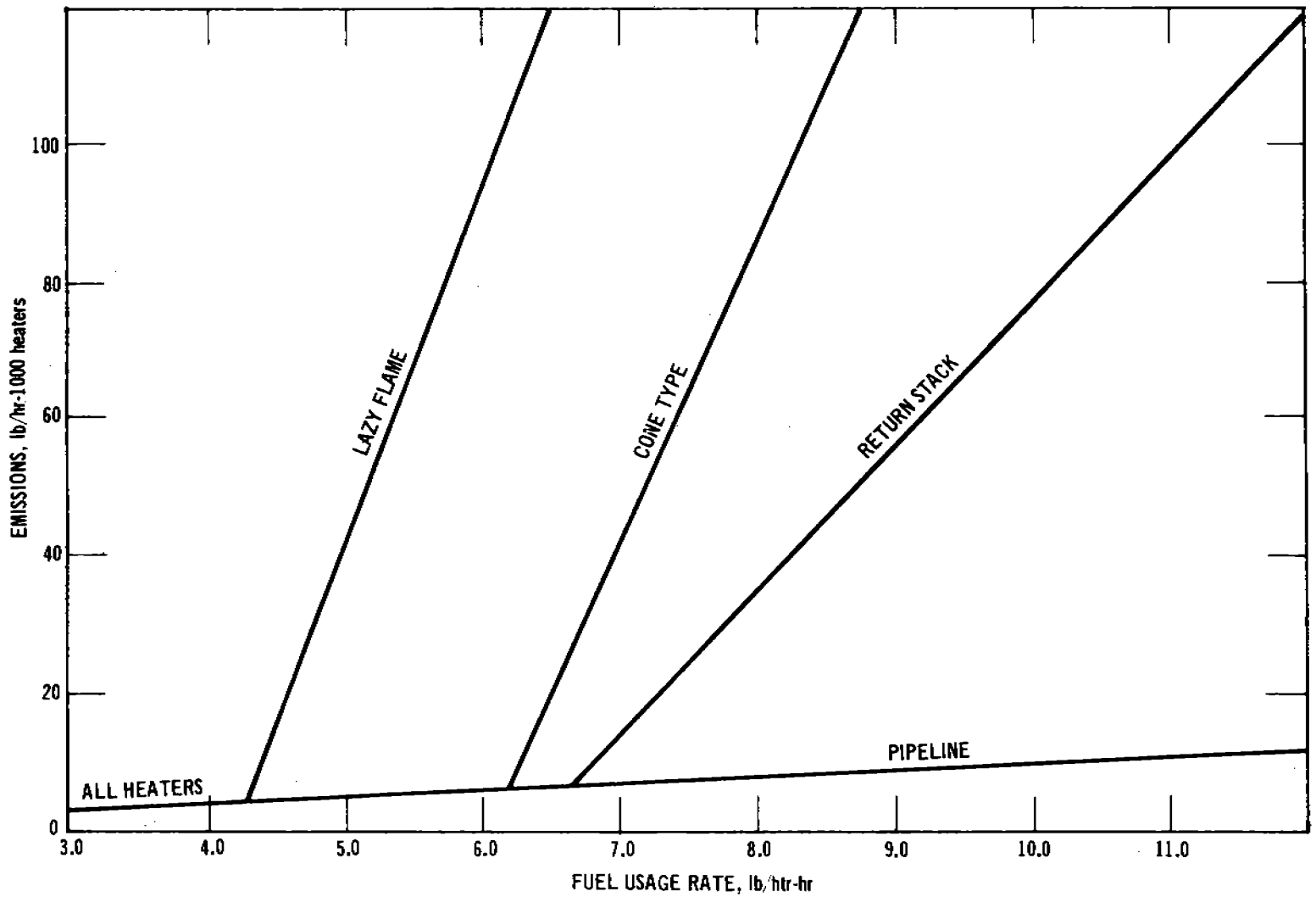

Figure 6.9-2. Particulate emissions from orchard heaters.[3,6]

Table 6.9-1. EMISSION FACTORS FOR ORCHARD HEATERS[a]
EMISSION FACTOR RATING: C

Pollutant	Type of heater				
	Pipeline	Lazy flame	Return stack	Cone	Solid fuel
Particulate					
lb/htr-hr	b	b	b	b	0.05
kg/htr-hr	b	b	b	b	0.023
Sulfur oxides[c]					
lb/htr-hr	0.13S[d]	0.11S	0.14S	0.14S	NA[e]
kg/htr-hr	0.06S	0.05S	0.06S	0.06S	NA
Carbon monoxide					
lb/htr-hr	6.2	NA	NA	NA	NA
kg/htr-hr	2.8	NA	NA	NA	NA
Hydrocarbons[f]					
lb/htr-yr	Neg[g]	16.0	16.0	16.0	Neg
kg/htr-yr	Neg	7.3	7.3	7.3	Neg
Nitrogen oxides[h]					
lb/htr-hr	Neg	Neg	Neg	Neg	Neg
kg/htr-hr	Neg	Neg	Neg	Neg	Neg

[a]References 1,3,4, and 6.

[b]Particulate emissions for pipeline, lazy flame, return stack, and cone heaters are shown in Figure 6.9-2.

[c]Based on emission factors for fuel oil combustion in Section 1.3.

[d]S = sulfur content.

[e]Not available.

[f]Reference 1. Evaporative losses only. Hydrocarbon emissions from combustion are considered negligible. Evaporative hydrocarbon losses for units that are part of a pipeline system are negligible.

[g]Negligible.

[h]Little nitrogen oxide is formed because of the relatively low combustion temperatures.

References for Section 6.9

1. Air Pollution in Ventura County. County of Ventura Health Department, Santa Paula, CA, June 1966.

2. Frost Protection in Citrus. Agricultural Extension Service, University of California, Ventura, CA, November 1967.

3. Personal communication with Mr. Wesley Snowden. Valentine, Fisher, and Tomlinson, Consulting Engineers, Seattle, WA, May 1971.

4. Communication with the Smith Energy Company, Los Angeles, CA, January 1968.

5. Communication with Agricultural Extension Service, University of California, Ventura, CA, October 1969.

6. Personal communication with Mr. Ted Wakai. Air Pollution Control District, County of Ventura, Ojai, CA, May 1972.

6.10 PHOSPHATE FERTILIZERS

6.10.1 NORMAL SUPERPHOSPHATES[1]

6.10.1.1 General

The term "normal superphosphate" is used to designate a fertilizer material containing 15 - 21 percent P_2O_5. It is prepared by reacting ground phosphate rock with 65 - 75 percent sulfuric acid. Rock and acid are mixed in a reaction vessel, held in an enclosed area (den) while the reaction mixture solidifies, and transferred to a storage pile for curing. Following curing, the product is most often ground and bagged for sale as run-of-the-pile product. It can also be granulated, for sale as granulated superphosphate or granular mixed fertilizer. However, this accounts for less than 5 percent of total production. To produce a granular normal superphosphate material, run-of-the-pile material is first fed to a pulverizer to be crushed, ground, and screened. Screened material is sent to a rotary drum granulator and then through a rotary dryer. The material goes through a rotary cooler and on to storage bins for sale as bagged or bulk product. Superphosphate fertilizers are produced at 79 plants in the United States. A generalized flow diagram of the process for the production of normal superphosphate is shown in Figure 6.10.1-1.

6.10.1.2 Emissions and Controls

Sources of emissions at a normal superphosphate plant include rock unloading and feeding, mixer (reactor), den, curing building, and fertilizer handling operations. Rock unloading, handling and feeding generate particulate emissions of phosphate rock dust. The mixer, den and curing building emit gaseous fluorides (HF and SiF_4) and particulates composed of fluoride and phosphate material. Fertilizer handling operations release fertilizer dust.

At a typical normal superphosphate plant, the rock unloading, handling and feeding operations are controlled by a baghouse. The mixer and den are controlled by a wet scrubber. The curing building and fertilizer handling operations normally are not controlled.

Emission factors for the production of normal superphosphate are presented in Table 6.10.1-1. These emission factors are averages based on recent source test data from controlled phosphate fertilizer plants in Florida.

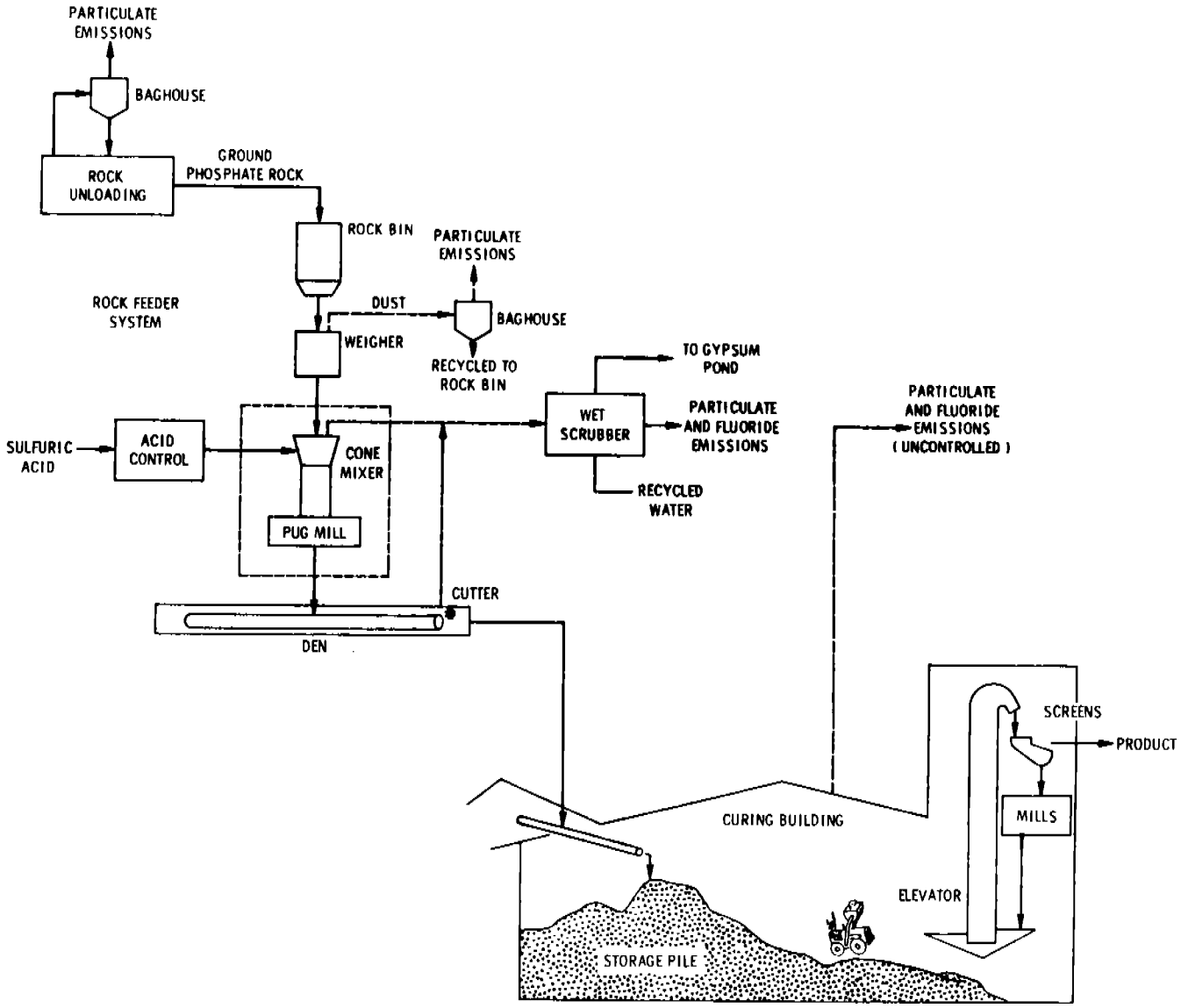

Figure 6.10.1-1. Normal superphosphate process flow diagram.

TABLE 6.10.1-1. EMISSION FACTORS FOR THE PRODUCTION OF NORMAL SUPERPHOSPHATE[a]

EMISSION FACTOR RATING: A

Emission point	Pollutant	Emission factor	
		lb/ton P_2O_5	kg/MT P_2O_5
Rock unloading[b]	Particulate	0.56	0.28
Rock feeding[b]	Particulate	0.11	0.06
Mixer and den[c]	Particulate	0.52	0.26
	Fluoride	0.20	0.10
Curing building[d]	Particulate	7.20	3.60
	Fluoride	3.80	1.90

[a]Reference 1, pp. 74-77, 169.
[b]Factors are for emissions from baghouse with an estimated collection efficiency of 99%.
[c]Factors are for emissions from wet scrubbers with a reported 97% control efficiency.
[d]Uncontrolled.

Particulate emissions from ground rock unloading, storage and transfer systems are controlled by baghouse collectors. These cloth filters have reported efficiencies of over 99 percent. Collected solids are recycled to the process.

Silicon tetrafluoride and hydrogen fluoride emissions, and particulate from the mixer, den and curing building are controlled by scrubbing the offgases with recycled water. Gaseous silicon tetrafluoride in the presence of moisture reacts to form gelatinous silica which has the tendency to plug scrubber packings. The use of conventional packed countercurrent scrubbers and other contacting devices with small gas passages for emissions control is therefore limited. Scrubber types that can be used are cyclonic, venturi, impingement, jet ejector and spray crossflow packed. Spray towers also find use as precontactors for fluorine removal at relatively high concentration levels (greater than 3,000 ppm, or 4.67 g/m^3).

Air pollution control techniques vary with particular plant designs. The effectiveness of abatement systems in removal of fluoride and particulate also varies from plant to plant, depending on a number of factors. The effectiveness of fluorine abatement is determined by (1) inlet fluorine concentration, (2) outlet or saturated gas temperature, (3) composition and temprature of the scrubbing liquid, (4) scrubber type and transfer units, and (5) effectiveness of entrainment separation. Control efficiency is enhanced by increasing the number of scrubbing

stages in series and by using a fresh water scrub in the final stage. Reported efficiencies for fluoride control range from less than 90 percent to over 99 percent, depending on inlet fluoride concentrations and the system employed. An efficiency of 98 percent for particulate control is achievable.

Reference for Section 6.10.1

1. J. M. Nyers, et al., Source Assessment: Phosphate Fertilizer Industry, EPA-600/2-79-019c, U. S. Environmental Protection Agency, Research Triangle Park, NC, May 1979.

6.10.2 TRIPLE SUPERPHOSPHATES

6.10.2.1 General[1]

Triple superphosphate is a fertilizer material of P_2O_5 content over 40 percent, made by reacting phosphate rock and phosphoric acid. The two principal types of triple superphosphate are run-of-the-pile (40 percent of total production) and granular (60 percent of total production). Run-of-the-pile material is essentially a pulverized mass of variable particle size produced in a manner similar to normal superphosphate. Thus, phosphoric acid (50 percent P_2O_5) is reacted in a cone mixer with ground phosphate rock. The resultant slurry begins to solidify on a slow moving conveyer (den) en route to the curing area. At the point of discharge from the den, the material passes through a rotary mechanical cutter that breaks up the solid mass. Coarse run-of-the-pile product is sent to a storage pile and cured for a period of 3 to 5 weeks. The final product is then mined from the "pile" in the curing shed, and then crushed, screened, and shipped in bulk. Granular triple superphosphate yields larger, more uniform particles with improved storage and handling properties. Most of this material is made with the Dorr-Oliver slurry granulation process, illustrated in Figure 6.10.2-1. In this process, ground phosphate rock is mixed with phosphoric acid in a reactor or mixing tank. The phosphoric acid used in this process is appreciably lower in concentration (40 percent P_2O_5) than that used to manufacture run-of-the-pile product, because the lower strength acid maintains the slurry in a fluid state during a mixing period of 1 to 2 hours. A thin slurry is continuously removed and distributed onto dried, recycled fines, where it coats the granule surfaces and builds up its size.

Pugmills and rotating drum granulators are used in the granulation process. A pugmill is composed of a u-shaped trough carrying twin contrarotating shafts, upon which are mounted strong blades or paddles. Their action agitates, shears and kneads the solid/liquid mix and transports the material along the trough. The basic rotary drum granulator consists of an open ended slightly inclined rotary cylinder, with retaining rings at each end and a scraper or cutter mounted inside the drum shell. A rolling bed of dry material is maintained in the unit while the slurry is introduced through distributor pipes set lengthwise in the drum under the bed. Slurry-wetted granules then discharge onto a rotary dryer, where excess water is evaporated and the chemical reaction is accelerated to completion by the dryer heat. Dried granules are then sized on vibrating screens. Oversize particles are crushed and recirculated to the screen, and undersize particles are recycled to the granulator. Product size granules are cooled in a countercurrent rotary drum, then sent to a storage pile for curing. After a curing period of 3 to 5 days, granules are removed from storage, screened, bagged and shipped.

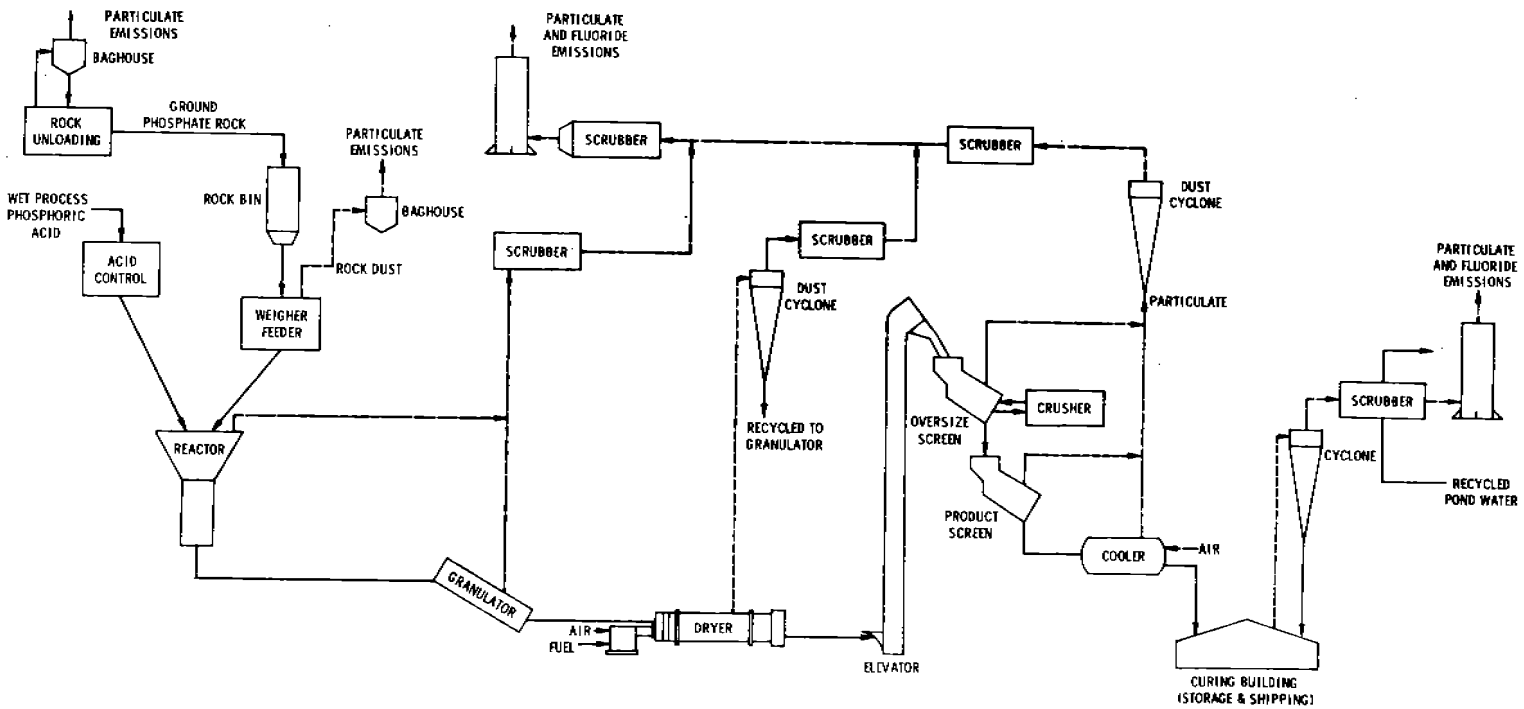

Figure 6.10.2-1. Dorr-Oliver process flow diagram for granular triple superphosphate production.

6.10.2.2 Emissions and Controls[1]

Emissions of fluorine compounds and dust particles occur during the production of granular triple superphosphate. Silicon tetrafluoride and hydrogen fluoride are released by the acidulation reaction and they evolve from the reactors, den, granulator, dryer and cooler. Evolution of fluorides continues at a lower rate in the curing building, as the reaction preceeds. Sources of particulate emissions include the reactor, granulator, dryer, cooler, screens, mills, and transfer conveyors. Additional emissions of particulate result from the unloading, storage and transfer of ground phosphate rock.

At a typical plant, emissions from the reactor, den and granulator are controlled by scrubbing the effluent gas with recycled gypsum pond water. Emissions from the dryer, cooler, screens, mills, product transfer systems, and storage building are sent to a cyclone separator for removal of a portion of the dust before going to wet scrubbers. Baghouses are used to control the fine rock particles generated by the preliminary ground rock handling activities.

Emission factors for the production of run-of-the-pile and granular triple superphosphate are given in Table 6.10.2-1. These emission factors are averages based on recent source test data from controlled phosphate fertilizer plants in Florida.

Particulate emissions from ground rock unloading, storage and transfer systems are controlled by baghouse collectors. These cloth filters have reported efficiencies of over 99 percent. Collected solids are recycled to the process. Emissions of silicon tetrafluoride, hydrogen fluoride, and particulate from the production area and curing building are controlled by scrubbing the offgases with recycled water. Exhausts from the dryer, cooler, screens, mills, and curing building are sent first to a cyclone separator and then to a wet scrubber.

Gaseous silicon tetrafluoride in the presence of moisture reacts to form gelatinous silica, which has the tendency to plug scrubber packings. The use of conventional packed countercurrent scrubbers and other contacting devices with small gas passages for emissions control is therefore limited. Scrubber types that can be used are (1) spray tower, (2) cyclonic, (3) venturi, (4) impingement, (5) jet ejector, and (6) spray-crossflow packed.

Spray towers are used as precontactors for fluorine removal at relatively high concentration levels (greater than 3,000 ppm, or 4.67 g/m^3).

Air pollution control techniques vary with particular plant designs. The effectiveness of abatement systems for the removal of fluoride and particulate also varies from plant to plant, depending on a number of factors. The effectiveness of fluorine abatement is determined by (1)

TABLE 6.10.2-1. CONTROLLED EMISSION FACTORS FOR THE PRODUCTION OF TRIPLE SUPERPHOSPHATES[a]

EMISSION FACTOR RATING: A

Process	Emission point	Pollutant	Controlled emission factor	
			lb/ton P_2O_5	kg/MT P_2O_5
Run-of-the-pile triple superphosphate	Rock unloading[b]	Particulate	0.14	0.07
	Rock feeding[b]	Particulate	0.03	0.01
	Cone mixer, den and curing building[c]	Particulate	0.03	0.02
		Fluoride	0.20	0.10
Granular triple superphosphate	Rock unloading[b]	Particulate	0.18	0.09
	Rock feeding[b]	Particulate	0.03	0.02
	Reactor, granulator, dryer, cooler and screens[c]	Particulate	0.10	0.05
		Fluoride	0.24	0.12
	Curing building[c]	Particulate	0.20	0.10
		Fluoride	0.04	0.02

[a]Reference 1, pp. 77-80, 168, 170-171.
[b]Factors are for emissions from baghouses with an estimated collection efficiency of 99%.
[c]Factors are for emissions from wet scrubbers with an estimated 97% control efficiency.

inlet fluorine concentration, (2) outlet or saturated gas temperature, (3) composition and temperature of the scrubbing liquid, (4) scrubber type and transfer units, and (5) effectiveness of entrainment separation. Control efficiency is enhanced by increasing the number of scrubbing stages in series and by using a fresh water scrub in the final stage. Reported efficiencies for fluoride control range from less than 90 percent to over 99 percent, depending on inlet fluoride concentrations and the system employed. An efficiency of 98 percent for particulate control is achievable.

Reference for Section 6.10.2

1. J. M. Nyers, et al., Source Assessment: Phosphate Fertilizer Industry, EPA-600/2-79-019c, U. S. Environmental Protection Agency, Research Triangle Park, NC, May 1979.

6.10.3 AMMONIUM PHOSPHATES

6.10.3.1 General[1]

Ammonium phosphates are produced by reacting phosphoric acid with anhydrous ammonia. Both solid and liquid ammonium phosphate fertilizers are produced in the United States. Ammoniated superphosphates are also produced, by adding normal superphosphate or triple superphosphate to the mixture. This discussion covers only the granulation of phosphoric acid with anhydrous ammonia to produce granular fertilizers. The production of liquid ammonium phosphates and ammoniated superphosphates in fertilizer mixing plants is considered a separate process. Two basic mixer designs are used by ammoniation-granulation plants, the pugmill ammoniator and the rotary drum ammoniator. Approximately 95 percent of ammoniation-granulation plants in the United States use a rotary drum mixer developed and patented by the Tennessee Valley Authority (TVA). In the TVA process, phosphoric acid is mixed in an acid surge tank with 93 percent sulfuric acid (used for product analysis control) and with recycle and acid from wet scrubbers (see Figure 6.10.3-1). Mixed acids are then partially neutralized with liquid or gaseous anhydrous ammonia in a brick lined acid reactor. All phosphoric acid and approximately 70 percent of ammonia are introduced into this vessel.

A slurry of $NH_4H_2PO_4$ and 22 percent water is produced and sent through steam-traced lines to the ammoniator-granulator. Ammonia rich offgases from the reactor are wet scrubbed before exhausting to the atmosphere. Primary scrubbers use raw material-mixed acids as scrubbing liquor, and secondary scrubbers use gypsum pond water.

The basic rotary drum ammoniator-granulator consists of a slightly inclined open end rotary cylinder with retaining rings at each end, and a scraper or cutter mounted inside the drum shell. A rolling bed of recycled solids is maintained in the units. Slurry from the reactor is distributed on the bed, and the remaining ammonia (approximately 30 percent) is sparged underneath. Granulation, by agglomeration and by coating particules with slurry, takes place in the rotating drum and is completed in the dryer. Ammonia rich offgases pass through a wet scrubber before exhausting to the atmosphere.

Moist ammonium phosphate granules are transferred to a rotary cocurrent dryer and then to a cooler. Before exhausting to the atmosphere, these offgases pass through cyclones and wet scrubbers. Cooled granules pass to a double deck screen, in which oversize and undersize particles are separated from product particles.

6.10.3.2 Emissions and Controls

Air emissions from production of ammonium phosphate fertilizers by ammoniation granulation of phosphoric acid and ammonia result from five process operations. The reactor and ammoniator granulator produce

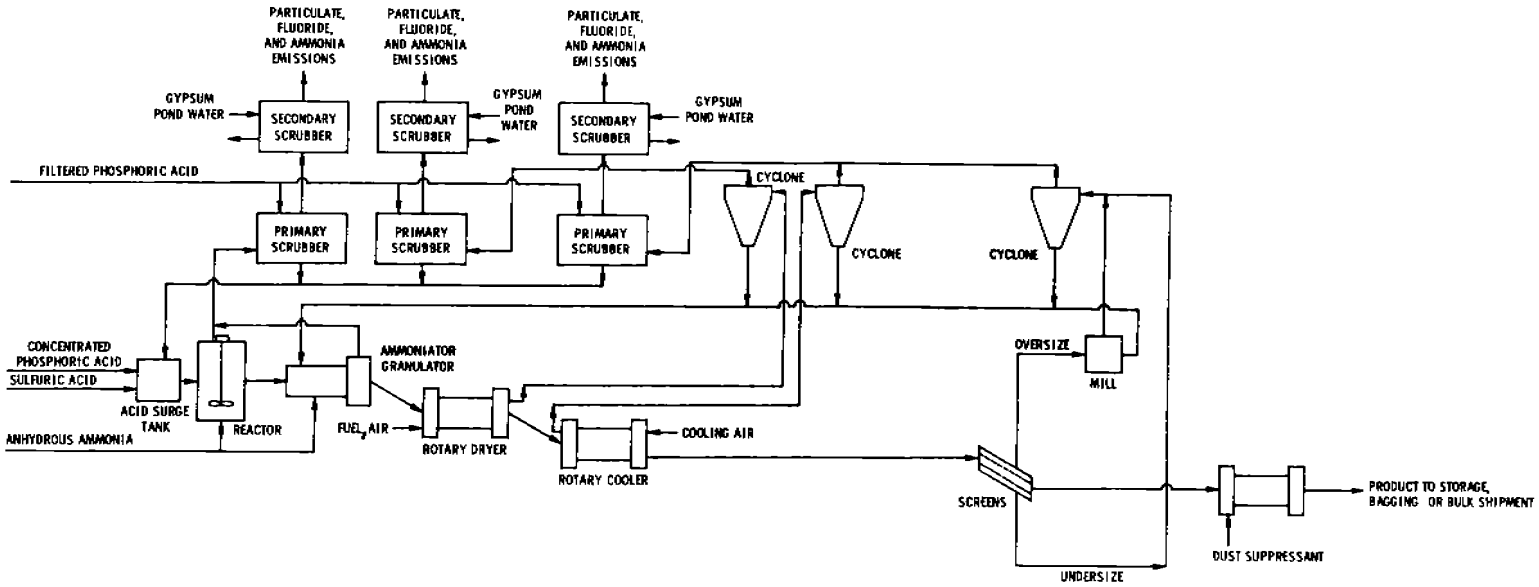

Figure 6.2.3-1. Ammonium phosphate process flow diagram.

emissions of gaseous ammonia, gaseous fluorides (HF and SiF_4) and particulate ammonium phosphates. These two exhaust streams generally are combined and passed through primary and secondary scrubbers.

Exhaust gases from the dryer and cooler also contain ammonia, fluorides and particulates, and these streams commonly are combined and passed through cyclones and primary and secondary scrubbers. Particulate emissions and low levels of ammonia and fluorides from product sizing and material transfer operations are controlled the same way.

Emission factors for ammonium phosphate production are summarized in Table 6.10.3-1. These emission factors are averages based on recent source test data from controlled phosphate fertilizer plants in Florida.

Exhaust streams from the reactor and ammoniator-granulator pass through a primary scrubber, in which phosphoric acid recovers ammonia and particulate. Exhaust gases from the dryer, cooler and screen go first to cyclones for particulate recovery, and from there to primary scrubbers. Materials collected in the cyclone and primary scrubbers are returned to the process. The exhaust is sent to secondary scrubbers, where recycled gypsum pond water is used as a scrubbing liquid to control fluoride emissions. The scrubber effluent is returned to the gypsum pond.

Primary scrubbing equipment commonly includes venturi and cyclonic spray towers, while cyclonic spray towers, impingement scrubbers, and spray-crossflow packed bed scrubbers are used as secondary controls. Primary scrubbers generally use phosphoric acid of 20 to 30 percent as scrubbing liquor, principally to recover ammonia. Secondary scrubbers generally use gypsum and pond water, for fluoride control.

Throughout the industry, however, there are many combinations and variations. Some plants use reactor-feed concentration phosphoric acid (40 percent P_2O_5) in both primary and secondary scrubbers, and some use phosphoric acid near the dilute end of the 20 to 30 percent P_2O_5 range in only a single scrubber. Existing plants are equipped with ammonia recovery scrubbers on the reactor, ammoniator-granulator and dryer, and particulate controls on the dryer and cooler. Additional scrubbers for fluoride removal are common but not typical. Only 15 to 20 percent of installations contacted in an EPA survey were equipped with spray-crossflow packed bed scrubbers or their equivalent for fluoride removal.

Emission control efficiencies for ammonium phosphate plant control equipment have been reported as 94 - 99 percent for ammonium, 75 - 99.8 percent for particulates, and 74 - 94 percent for fluorides.

TABLE 6.10.3-1. AVERAGE CONTROLLED EMISSION FACTORS FOR THE PRODUCTION OF AMMONIUM PHOSPHATES[a]

EMISSION FACTOR RATING: A

Emission Point	Controlled Emission Factors lb/ton P_2O_5	kg/MT P_2O_5
Reactor/ammoniator-granulator		
Fluoride (as F)	0.05	0.02
Particulates	1.52	0.76
Ammonia	b	b
Dryer/cooler		
Fluoride (as F)	0.03	0.02
Particulates	1.50	0.75
Ammonia	b	b
Product sizing and material transfer		
Fluoride (as F)[c]	0.01	0.01
Particulates[c]	0.06	0.03
Ammonia	b	b
Total plant emissions		
Fluoride (as F)[d]	0.08	0.04
Particulates[e]	0.30	0.15
Ammonia	0.14	0.07

[a]Reference 1, pp. 80-83, 173.
[b]No information available. Although ammonia is emitted from these unit operations, it is reported as a total plant emission.
[c]Represents only one sample.
[d]EPA has promulgated a fluoride emission guideline of 0.03 g/kg P_2O_5 input.
[e]Based on limited data from only 2 plants.

Reference for Section 6.10.3

1. J. M. Nyers, et al., Source Assessment: Phosphate Fertilizer Industry, EPA-600/2-79-019c, U.S. Environmental Protection Agency, Research Triangle Park, NC, May 1979.

6.11 STARCH MANUFACTURING

6.11.1 Process Description[1]

The basic raw material in the manufacture of starch is dent corn, which contains starch. The starch in the corn is separated from the other components by "wet milling."

The shelled grain is prepared for milling in cleaners that remove both the light chaff and any heavier foreign material. The cleaned corn is then softened by soaking (steeping) it in warm water acidified with sulfur dioxide. The softened corn goes through attrition mills that tear the kernels apart, freeing the germ and loosening the hull. The remaining mixture of starch, gluten, and hulls is finely ground, and the coarser fiber particles are removed by screening. The mixture of starch and gluten is then separated by centrifuges, after which the starch is filtered and washed. At this point it is dried and packaged for market.

6.11.2 Emissions

The manufacture of starch from corn can result in significant dust emissions. The various cleaning, grinding, and screening operations are the major sources of dust emissions. Table 6.11-1 presents emission factors for starch manufacturing.

Table 6.11-1. EMISSION FACTORS FOR STARCH MANUFACTURING[a] EMISSION FACTOR RATING: D

Type of operation	Particulates	
	lb/ton	kg/MT
Uncontrolled	8	4
Controlled[b]	0.02	0.01

[a]Reference 2.
[b]Based on centrifugal gas scrubber.

References for Section 6.11

1. Starch Manufacturing. In: Kirk-Othmer Encyclopedia of Chemical Technology, Vol. IX. New York, John Wiley and Sons, Inc. 1964.

2. Storch, H. L. Product Losses Cut with a Centrifugal Gas Scrubber. Chem. Eng. Progr. *62*:51-54. April 1966.

6.12 SUGAR CANE PROCESSING

6.12.1 General [1-3]

Sugar cane is burned in the field prior to harvesting to remove unwanted foliage as well as to control rodents and insects. Harvesting is done by hand or, where possible, by mechanical means.

After harvesting, the cane goes through a series of processing steps for conversion to the final sugar product. It is first washed to remove dirt and trash; then crushed and shredded to reduce the size of the stalks. The juice is next extracted by one of two methods, milling or diffusion. In milling, the cane is pressed between heavy rollers to squeeze out the juice; in diffusion, the sugar is leached out by water and thin juices. The raw sugar then goes through a series of operations including clarification, evaporation, and crystallization in order to produce the final product. The fibrous residue remaining after sugar extraction is called bagasse.

All mills fire some or all of their bagasse in boilers to provide power necessary in their milling operation. Some, having more bagasse than can be utilized internally, sell the remainder for use in the manufacture of various chemicals such as furfural.

6.12.2 Emissions [2,3]

The largest sources of emissions from sugar cane processing are the openfield burning in the harvesting of the crop and the burning of bagasse as fuel. In the various processes of crushing, evaporation, and crystallization, relatively small quantities of particulates are emitted. Emission factors for sugar cane field burning are shown in Table 2.4-2. Emission factors for bagasse firing in boilers are included in Chapter 1.

References for Section 6.12

1. Sugar Cane. In: Kirk-Othmer Encyclopedia of Chemical Technology, Vol. IX. New York, John Wiley and Sons, Inc. 1964.

2. Darley, E. F. Air Pollution Emissions from Burning Sugar Cane and Pineapple from Hawaii. In: Air Pollution from Forest and Agricultural Burning. Statewide Air Pollution Research Center, University of California, Riverside, Calif. Prepared for Environmental Protection Agency, Research Triangle Park, N.C. under Grant No. R800711. August 1974.

3. Background Information for Establishment of National Standards of Performance for New Sources. Raw Cane Sugar Industry. Environmental Engineering, Inc. Gainesville, Fla. Prepared for Environmental Protection Agency, Research Triangle Park, N.C. under Contract No. CPA 70-142, Task Order 9c. July 15, 1971.

6.13 BREAD BAKING

6.13.1 General[1,2]

Bakery products generally can be divided into two groups—products leavened by yeast and products chemically leavened by baking powder. Other than yeast bread, which comprises the largest fraction of all yeast leavened baking production, leavened products include sweet rolls, crackers, pretzels, etc. Examples of chemically leavened baking products are cakes, cookies, cake doughnuts, corn bread and baking powder biscuits.

Bread is generally produced by either the straight-dough process or the sponge-dough process. In the straight-dough process, the ingredients are mixed, allowed to ferment, and then baked. In the sponge-dough process, only part of the ingredients are initially mixed and allowed to ferment, with the remainder added to the mix and fermented just prior to baking. The sponge-dough process is more often used by commercial bakeries.

In a commercial bakery, bread dough is fermented from two to four hours prior to baking at about 450°F (232°C). The temperature inside the bread does not exceed 212°F (100°C). The ovens used are predominately direct fired by natural gas. In such ovens, any vapors driven off the bread and any combustion product gases are removed through the same exhaust vent.

6.13.2 Emissions[1,2]

In the leavening process, yeast metabolizes the sugars and starches in the bread dough. During this fermentation stage, various chemical reactions take place, with the end products being primarily carbon dioxide (CO_2) and ethanol (C_2H_5OH). The carbon dioxide is necessary to leaven the dough, thereby increasing its volume. The byproduct ethanol, however, evaporates and leaves the dough. The rate of ethanol production depends on dough temperature, quantity of sweetner and type of yeast.

Laboratory experiments[1] and theoretical estimates[2] suggest that ethanol emissions from the sponge-dough process may range from 5 to 8 pounds per 1000 pounds of bread produced, whereas ethanol emissions from the straight-dough process are only 0.5 pounds per 1000 pounds produced. These factors include ethanol evaporation from all phases of bread production, although most of the emissions occur during baking. Negligible quantities of ethanol remain in the bread following baking. Several other non-methane volatile organic compounds are also emitted from bread production, but in much smaller amounts. The reader should consult References 1 and 2 for details on how these emission factors are derived.

No controls or process modifications are employed to reduce ethanol emissions from bakeries. Some fraction of the ethanol emitted during baking could potentially be destroyed in the direct fired gas ovens, but since the ethanol does not come into contact with the flame zone, this fraction is thought to be insignificant.

References for Section 6.13

1. R.M. Keller. *Nonmethane Organic Emissions from Bread Producing Operations*, EPA-450/4-79-001. U.S. Environmental Protection Agency, Research Triangle Park, NC. December 1978.

2. D.C. Henderson, "Commercial Bakeries as a Major Source of Reactive Volatile Organic Gases", *Emission Inventory/Factor Workshop: Volume I*, EPA-450/3-78-042a. U.S. Environmental Protection Agency, Research Triangle Park, NC. August 1978.

6.14 UREA

6.14.1 General[1]

Urea ($CO[NH_2]_2$), also known as carbamide or carbonyl diamide, is produced by reacting ammonia and carbon dioxide at 448 - 473K (347 - 392°F) and 13.7 - 23.2 MPa (2,000[2] - 3,400 psi) to form ammonium carbamate ($NH_2CO_2NH_4$). Pressure may be as high as 41.0 MPa (6,000 psi).[3] Urea is formed by a dehydration decomposition of ammonium carbamate.

Urea is marketed as a solution or in a variety of solid forms. Most urea solution produced is used in fertilizer mixtures, with a small amount going to animal feed supplements. Most solids are produced as prills or granules, for use as fertilizer or protein supplement in animal feeds, and use in plastics manufacturing. Five U. S. plants produce solid urea in crystalline form.

The process for manufacturing urea involves a combination of up to seven major unit operations. These operations, illustrated by the flow diagram in Figure 6.14-1, are solution synthesis, solution concentration, solids formation, solids cooling, solids screening, solids coating, and bagging and/or bulk shipping.

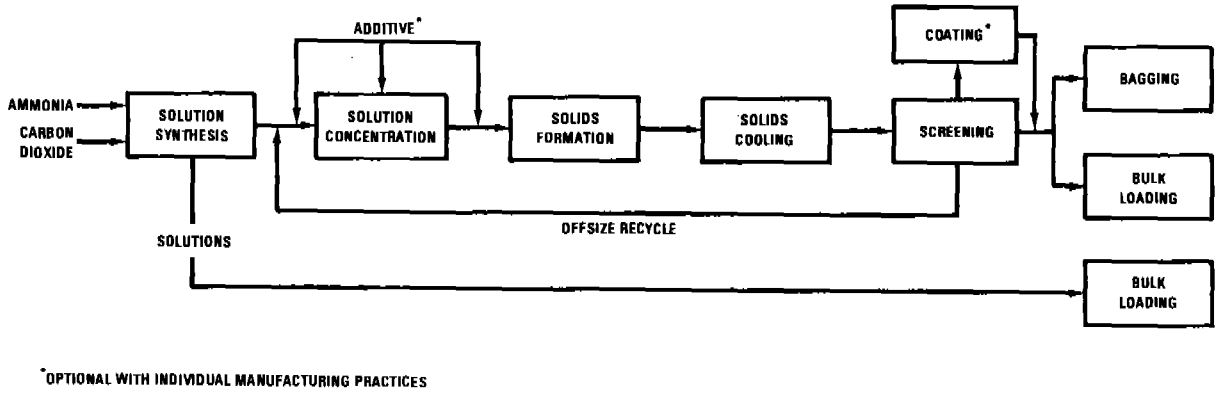

Figure 6.14-1. Major urea manufacturing operations.

The combination of processing steps is determined by the desired end products. For example, plants producing urea solution use only the solution formulation and bulk shipping operations. Facilities producing solid urea employ these two operations and various combinations of the remaining five operations, depending upon the specific end product being produced.

In the solution synthesis operation, ammonia and CO_2 are reacted to form ammonium carbamate. The carbamate is then dehydrated to yield 70 to 77 percent aqueous urea solution. This solution can be used as an

ingredient of nitrogen solution fertilizers, or it can be concentrated further to produce solid urea.

The concentration process furnishes urea melt for solids formation. The three methods of concentrating the urea solution are vacuum concentration, crystallization and atmospheric evaporation. The method chosen depends upon the level of biuret ($NH_2CONHCONH_2$) impurity allowable in the end product. The most common method of solution concentration is evaporation.

Urea solids are produced from the urea melt by two basic methods, prilling and granulation. Prilling is a process by which solid particles are produced from molten urea. Molten urea is sprayed from the top of a prill tower, and as the droplets fall through a countercurrent air flow, they cool and solidify into nearly spherical particles. There are two types of prill towers, fluidized bed and nonfluidized bed. The major difference between these towers is that a separate solids cooling operation may be required to produce agricultural grade prills in a nonfluidized bed prill tower.[4]

Granulation is more popular than prilling in producing solid urea for fertilizer. There are two granulation methods, drum granulation and pan granulation. In drum granulation, solids are built up in layers on seed granules in a rotating drum granulator/cooler approximately 14 feet in diameter. Pan granulators also form the product in a layering process, but different equipment is used, and pan granulators are not common in this country.

The solids cooling operation generally is accomplished during solids formation, but for pan granulation processes and for some agricultural grade prills, some supplementary cooling is provided by auxiliary rotary drums.

The solids screening operation removes offsize product from solid urea. The offsize material may be returned to the process in the solid phase or be redissolved in water and returned to the solution concentration process.

Clay coatings are used in the urea industry to reduce product caking and urea dust formation, even though they also reduce the nitrogen content of the product, and the coating operation creates clay dust emissions. The popularity of clay coating has diminished considerably because of the practice of injecting formaldehyde additives into the liquid or molten urea before solids formation.[5-6] Additives reduce solids caking during storage and urea dust formation during transport and handling.

The majority of solid urea product is bulk shipped in trucks, enclosed railroad cars, or barges, but approximately 10 percent is bagged.

6.14.2 Emissions and Controls

Emissions from urea manufacture include ammonia and particulate matter. Ammonia is emitted during the solution synthesis and solids production processes. Particulate matter is the primary emission being addressed here. There have been no reliable measurements of free gaseous formaldehyde emissions. The chromotropic acid procedure that has been used to measure

formaldehyde is not capable of distinguishing between gaseous formaldehyde and methylenediurea, the principle compound formed when the formaldehyde additive reacts with hot urea.[7-8]

In the synthesis process, some emission control is inherent in the recycle process where carbamate gases and/or liquids are recovered and recycled. Typical emission sources from the solution synthesis process are noncondensable vent streams from ammonium carbamate decomposers and separators. Emissions from synthesis processes are generally combined with emissions from the solution concentration process and are vented through a common stack. Combined particulate emissions from urea synthesis and concentration are much less than particulate emissions from a typical solids producing urea plant. The synthesis and concentration operations are usually uncontrolled except for recycle provisions to recover ammonia. For these reasons, no factor for controlled emissions from synthesis and concentration processes is given in this section.

Uncontrolled emission rates from prill towers may be affected by the following factors:

- product grade being produced
- air flow rate through the tower
- type of tower bed
- ambient temperature and humidity

The total of mass emissions per unit is usually lower for feed grade prill production than for agricultural grade prills, due to lower airflows.[5] Uncontrolled particulate emission rates for fluidized bed prill towers are higher than those for nonfluidized bed prill towers making agricultural grade prills and are approximately equal to those for nonfluidized bed feed grade prills.[4] Ambient air conditions can affect prill tower emissions. Available data indicate that colder temperatures promote the formation of smaller particles in the prill tower exhaust.[9] Since smaller particles are more difficult to remove, the efficiency of prill tower control devices tends to decrease with ambient temperatures. This can lead to higher emission levels for prill towers operated during cold weather. Ambient humidity can also affect prill tower emissions. Air flow rates must be increased with high humidity, and higher air flow rates usually cause higher emissions.

The design parameters of drum granulators and rotary drum coolers may affect emissions.[10-11]

Drum granulators have an advantage over prill towers in that they are capable of producing very large particles without difficulty. Granulators also require less air for operation than do prill towers. A disadvantage of granulators is their inability to produce the smaller feed grade granules economically. To produce smaller granules, the drum must be operated at a higher seed particle recycle rate. It has been reported that, although the increase in seed material results in a lower bed temperature, the corresponding increase in fines in the granulator causes a higher emission rate.[10] Cooling air passing through the drum granulator entrains approximately 10 to 20 percent of the product.[8] This air stream is

controlled with a wet scrubber which is standard process equipment on drum granulators.

In the solids screening process, dust is generated by abrasion of urea particles and the vibration of the screening mechanisms. Therefore, almost all screening operations used in the urea manufacturing industry are enclosed or are covered over the uppermost screen. This operation is a small emission source, and particulate emissions from solids screening are not treated here.[12-13]

Emissions attributable to coating include entrained clay dust from loading, inplant transfer, and leaks from the seals of the coater. No emissions data are available to quantify this fugitive dust source.

Bagging operations are a source of particulate emissions. Dust is emitted from each bagging method during the final stages of filling, when dustladen air is displaced from the bag by urea. Bagging operations are conducted inside warehouses and are usually vented to keep dust out of the workroom area, according to OSHA regulations. Most vents are controlled with baghouses. Nationwide, approximately 90 percent of urea produced is bulk loaded. Few plants control their bulk loading operations. Generation of visible fugitive particles is slight.

Table 6.14-1 summarizes the uncontrolled and controlled emission factors, by processes, for urea manufacture. Table 6.14-2 summarizes particle sizes for these emissions.

TABLE 6.14-2. UNCONTROLLED PARTICLE SIZE DATA FOR UREA PRODUCTION[a]

OPERATION	PARTICLE SIZE (Cummulative Weight %) ≤ 10 μm	≤ 5 μm	≤ 2.5 μm
Solution Formation and Concentration	NA	NA	NA
Solids Formation			
Nonfluidized bed prilling			
agricultural grade	90	84	79
feed grade	85	74	50
Fluidized bed prilling			
agricultural grade	60	52	43
feed grade	24	18	14
Drum granulation	b	b	b
Rotary Drum Cooler	0.70	0.15	0.04
Bagging	NA	NA	NA
Bulk Loading	NA	NA	NA

[a]NA = not available. No data were available on particle sizes of controlled emissions. Particle size information was collected uncontrolled in the ducts and may not reflect particle size in the ambient air.

[b]All particulate matter ≥ 5.7 μm was collected in the cyclone precollector sampling equipment.

TABLE 6.14-1. EMISSION FACTORS FOR UREA PRODUCTION[a]

EMISSION FACTOR RATING: A[b]

Operation	Particulates[c]				Ammonia			
	Uncontrolled		Controlled		Uncontrolled		Exiting Control Device	
	kg/Mg	lb/ton	kg/Mg	lb/ton	kg/Mg	lb/ton	kg/Mg	lb/ton
Solution formation and concentration[d]	0.0105[e]	0.021[e]	-	-	9.12[f]	18.24[f]	-	-
Solids formation								
Nonfluidized bed prilling								
agricultural grade[g]	1.9[h]	3.8[h]	0.032	0.064	0.43	0.87	i	i
feed grade[j]	1.8	3.6	NA	NA	NA	NA	NA	NA
Fluidized bed prilling								
agricultural grade[j]	3.1	6.2	0.39	0.78	1.46	2.91	i	i
feed grade[j]	1.8	3.6	0.24	0.48	2.07	4.14	1.04	2.08
Drum granulation[k]	120	241	0.115	0.234	1.07[l]	2.15[l]	h	h
Rotary drum cooler	3.72	7.45	0.10[m]	0.20[m]	0.0256	0.051	NA	NA
Bagging	0.095[n]	0.19[n]	NA	NA	NA	NA	NA	NA

[a]Based on emissions per unit of production output. Dash = not applicable. NA = not available.

[b]Emission Factor Rating is C for controlled particulate emissions from rotary drum coolers and uncontrolled particulate emissions from bagging.

[c]Particulate test data were collected using a modification of EPA Reference Method 5. Reference 1, Appendix B explains these modifications.

[d]References 14 - 16, 19. Emissions from the synthesis process are generally combined with emissions from the solution concentration process and vented through a common stack. In the synthesis process, some emission control is inherent in the recycle process where carbamate gases and/or liquids are recovered and recycled.

[e]EPA test data indicated a range of 0.0052 - 0.0150 kg/Mg (0.0104 - 0.0317 lb/ton).

[f]EPA test data indicated a range of 3.79 - 14.44 kg/Mg (7.58 - 28.89 lb/ton).

[g]Reference 20. These factors were determined at an ambient temperature of 288K - 294K (57°F - 69°F). The controlled emission factors are based on ducting exhaust through a downcomer and then a wetted fiber filter scrubber achieving a 98.3 percent efficiency. This represents a higher degree of control than is typical in this industry.

[h]Figures are based on EPA test data. Industry test data ranged from 0.39 - 1.79 kg/Mg (0.78 - 3.58 lb/ton).

[i]No ammonia control demonstrated by scrubbers installed for particulate control. Some increase in ammonia emissions exiting the control device was noted.

[j]Reference 19. Feed grade factors were determined at an ambient temperature of 302K (85°F) and agricultural grade factors at an ambient temperature of 299K (80°F). For fluidized bed prilling, controlled emission factors are based on use of an entrainment scrubber.

[k]References 14 - 16. Controlled emission factors are based on use of a wet entrainment scrubber. Wet scrubbers are standard process equipment on drum granulators. Uncontrolled emissions were measured at the scrubber inlet.

[l]EPA test data indicated a range of 0.955 - 1.20 kg/Mg (1.91 - 2.40 lb/ton).

[m]EMISSION FACTOR RATING: C; Reference 1.

[n]EMISSION FACTOR RATING: C; Reference 1.

Urea manufacturers presently control particulate matter emissions from prill towers, coolers, granulators and bagging operations. With the exception of bagging operations, urea emission sources usually are controlled with wet scrubbers. The preference of scrubber systems over dry collection systems is primarily for the easy recycling of dissolved urea collected in the device. Scrubber liquors are recycled to the solution concentration process to eliminate waste disposal problems and to recover the urea collected.[1]

Fabric filters (baghouses) are used to control fugitive dust from bagging operations, where humidities are low and blinding of the bags is not a problem. However, many bagging operations are uncontrolled.[1]

References for Section 6.14

1. Urea Manufacturing Industry - Technical Document, EPA-450/3-81-001, U. S. Environmental Protection Agency, Research Triangle Park, NC, January 1981.

2. D. F. Bress, M. W. Packbier, "The Startup of Two Major Urea Plants," Chemical Engineering Progress, May 1977, p. 80.

3. A. V. Slack, "Urea," Fertilizer Development Trends, Noyes Development Corporation, Park Ridge, NJ, 1968, p. 121.

4. Written communication from J. M. Killen, Vistron Corporation, Lima, OH, to D. R. Goodwin, U. S. Environmental Protection Agency, Research Triangle Park, NC, December 21, 1978.

5. Written communication from J. P. Swanburg, Union Oil of California, Brea, CA, to D. R. Goodwin, U. S. Environmental Protection Agency, Research Triangle Park, NC, December 20, 1978.

6. Written communication from M. I. Bornstein and S. V. Capone, GCA Corporation, Bedford, MA, to E. A. Noble, U. S. Environmental Protection Agency, Research Triangle Park, NC, June 22, 1978.

7. Written communication from Gary McAlister, U. S. Environmental Protection Agency, Emission Measurement Branch, to Eric Noble, U. S. Environmental Protection Agency, Industrial Studies Branch, Research Triangle Park, NC, July 28, 1983.

8. Formaldehyde Use in Urea-Based Fertilizers, Report of the Fertilizer Institute's Formaldehyde Task Group, The Fertilizer Institute, Washington, D. C., February 4, 1983.

9. J. H. Cramer, "Urea Prill Tower Control Meeting 20% Opacity," Presented at the Fertilizer Institute Environmental Symposium, New Orleans, LA, April 1980.

10. Written communication from M. I. Bornstein, GCA Corporation, Bedford, MA, to E. A. Noble, U. S. Environmental Protection Agency, Research Triangle Park, NC, August 2, 1978.

11. Written communication from M. I. Bornstein and S. V. Capone, GCA Corporation, Bedford, MA, to E. A. Noble, U. S. Environmental Protection Agency, Research Triangle Park, NC, June 23, 1978.

12. Written communication from J. P. Alexander, Agrico Chemical Company, Donaldsonville, LA, to D. R. Goodwin, U. S. Environmental Protection Agency, NC, December 21, 1978.

13. Written communication from N. E. Picquet, W. R. Grace and Company, Memphis, TN, to D. R. Goodwin, U. S. Environmental Protection Agency, Research Triangle Park, NC, December 14, 1978.

14. Urea Manufacture: Agrico Chemical Company Emission Test Report, EMB Report 79-NHF-13a, U. S. Environmental Protection Agency, Research Triangle Park, NC, September 1980.

15. Urea Manufacture: Agrico Chemical Company Emission Test Report, EMB Report 78-NHF-4, U. S. Environmental Protection Agency, Research Triangle Park, NC, April 1979.

16. Urea Manufacture: CF Industries Emission Test Report, EMB Report 78-NHF-8, U. S. Environmental Protection Agency, Research Triangle Park, NC, May 1979.

17. Urea Manufacture: Union Oil of California Emission Test Report, EMB Report 78-NHF-7, U. S. Environmental Protection Agency, Research Triangle Park, NC, October 1979.

18. Urea Manufacture: Union Oil of California Emission Test Report, EMB Report 80-NHF-15, U. S. Environmental Protection Agency, Research Triangle Park, NC, September 1980.

19. Urea Manufacture: W. R. Grace and Company Emission Test Report, EMB Report 78-NHF-3, U. S. Environmental Protection Agency, Research Triangle Park, NC, December 1979.

20. Urea Manufacture: Reichhold Chemicals Emission Test Report, EMB Report 80-NHF-14, U. S. Environmental Protection Agency, Research Triangle Park, NC, August 1980.

6.15 BEEF CATTLE FEEDLOTS

6.15.1 General[1]

A beef cattle feedlot is an area in which beef animals are confined for fattening prior to marketing. This fattening, or finish feeding, typically lasts four to five months, during which time the cattle are fed a high energy ration of feed grains and/or forage.

Cattle feedlots range in capacity from several head up to 100,000 cattle. Of the 146,000 beef cattle feedlots in the U.S. in 1973, 2,040 feedlots had a capacity of more than 1,000 head, marketing 65 percent of all finish fed beef cattle. Animal density in feedlots is generally in the range of 12,500 to 125,000 head/km^2.

During its stay in a feedlot, a beef animal will produce over 450 kg of manure (dry weight). Wet manure production is typically about 27 kg per day per head, usually deposited on less than 20 m^2 of surface. Because of the prodigious quantity of manure produced in a feedlot, periodic removal is necessary to prevent unacceptable accumulations. Most cattle manure is applied to nearby land as fertilizer for feed grain production, while some is lagooned, dumped on wastelands, or disposed of through incineration, liming, or pitting. Manure removal frequencies are dictated in part by climatic conditions, animal comfort, labor scheduling, and air and water pollution control potentials. Typically, manure removal is conducted from one to three times per year. When disposal is not immediately possible after removal, the manure may be stockpiled on a nearby open site.

The leading states in the industry are Texas, Nebraska, Iowa, Kansas, Colorado, California, and Illinois. These states contribute 75 percent of all feed cattle marketed and contain 72 percent of the feedlots greater than 1000 head capacity. Feedlots are generally located in low population density regions with access to major transportation routes.

6.15.2 Emissions and Controls[1]

Air pollution from feedlots originates from several points in a feedlot operation, including the holding pens, runoff holding ponds, and alleyways among pens. Major pollutants of concern include fugitive particulate, ammonia and various malodorous gases.

Fugitive particulate is generated several ways. Cattle movement within the holding pens is a primary source. Dust is also generated by wind acting on the dried surfaces and by vehicular traffic on alleyways among the pens. Fugitive particulate emissions from feedlots are composed largely of soil dust and dried manure. The potential for dust generation is greatly increased during prolonged dry periods (e.g., from late spring to midsummer in the Southwest), and when a loose, dry pad of soil and manure is allowed to build up in the pens.

Ammonia is the predominant gaseous pollutant emitted from feedlots. Ammonia is a result of anaerobic decomposition of feedlot surfaces as well as volatilization from urine. Ammonia emissions are generally increased when conditions favor anaerobic decay. For example, although 25 to 40 percent moisture levels are necessary on feedlot surfaces for aerobic decomposition (which is odorless), too much rain or watering, resulting in puddling and wet spots, can trigger increased ammonia production. Ammonia formation may also occur when anaerobic conditions exist in the manure stockpiles and runoff holding ponds. In general, higher ammonia emissions are associated with higher temperatures and humidity, overly wet conditions, and feedlot disturbances such as mounding or manure removal.

A number of extremely odorous compounds (amines, sulfides, mercaptans) may also result from anaerobic decomposition of solid manure beneath the feedlot surface as well as in the runoff holding ponds.

Generally, the same conditions that favor ammonia production will enhance the evolution of these other gases, as well.

No air pollutant control devices are applied to feedlots because of the fugitive nature of the emissions. The most effective controls involve various housekeeping measures designed to eliminate conditions that favor the generation of dust and odors. For example, measures that help to maintain sufficient moisture levels in the feedlot surface areas and manure stockpiles will reduce the generation of dust. One of the most effective dust control techniques is periodic application of water to the dry feedlot surface, by either permanent sprinkling systems or mobile tank trucks. However, care must be taken to avoid overwatering, which can cause wet spots conducive to anaerobic decay and subsequent malodors. Increasing the cattle density in the pens may also help maintain high enough moisture levels to limit particulate generation. In addition, some dust control is effected by minimizing the accumulation of dry and pulverized manure on the surfaces of the feedlots. A maximum depth of 2 to 8 cm of loose, dry manure is recommended for increasing the effectiveness of dust control procedures.

Odor and ammonia control are best effected by housekeeping measures that enhance aerobic rather than anaerobic decomposition of the cattle wastes. For example, besides reducing dust emissions, sprinkling provides moisture for aerobic biodegradation of the manure. Good drainage must be provided, however, and overwatering must be avoided. Deep accumulations of manure of slurry consistency can optimize anaerobic conditions. Hence, feedlot surfaces should be periodically scraped to remove such accumulations. Scraping should be done carefully, so that only the surface layer is disturbed. Manure stockpiles should not be allowed to get too large, too wet, or encrusted, and they should be disposed of within four or five days. If the stockpiles are composted, the manure should be piled in long narrow windrows to allow access for turning the piles to promote aerobic conditions and to enable rapid control of spontaneous combustion fires. Anaerobic conditions can be reduced in runoff holding ponds by removing solids from the runoff, by adding more water to the ponds to dilute the nutrient content, and by aeration of the surface. Runoff water also may be treated chemically to suppress the release of malodorous gases.

Emission factors for feedlot operations are shown in Table 6.15-1. These factors should be considered at best to be crude estimates of potential emissions from feedlots where no measures are employed to control dust or odors. The limitations of these factors are more fully discussed in the footnote to Table 6.15-1. The reader should consult Reference 1 for a detailed discussion of the emissions and control information available on beef cattle feedlots.

Table 6.15-1. EMISSION FACTORS FOR BEEF CATTLE FEEDLOTS[a]
EMISSION FACTOR RATING: E

Pollutant	Feedlot capacity basis lb (kg) per day per 1000 head capacity	Feedlot throughput basis ton (metric ton) per 1000 head throughput
Particulate[b]	280 (130)	27 (25)
Ammonia[c]	11 (5)	1.1 (1)
Amines[c]	0.4 (0.2)	0.044 (0.04)
Total sulfur compounds[c]	1.7 (0.8)	0.15 (0.14)

[a]These factors represent general feedlot operations with no housekeeping measures for air pollution control. Because of the limited data available on emissions and the nature of the techniques utilized to develop emission factors, Table 6.15-1 should only be used to develop order-of-magnitude estimates of feedlot emissions. All factors are based on information compiled in Reference 1.

[b]These factors represent emissions during a dry season at a feedlot where watering as a dust control measure would not be a common practice. No data are available to estimate emission factors for feedlots during periods of abundant precipitation or where watering and other housekeeping measures are employed for dust control.

[c]These factors represent emission factors for feedlots that have not been chemically treated and where no special housekeeping measures are employed for odor control.

Reference for Section 6.15

1. J.A. Peters and T.R. Blackwood, *Source Assessment: Beef Cattle Feedlots*, EPA-600/2-77-107, U.S. Environmental Protection Agency, Research Triangle Park, NC, June 1977.

6.16 DEFOLIATION AND HARVESTING OF COTTON

6.16.1 General

Wherever it is grown in the U.S., cotton is defoliated or disiccated prior to harvest. Defoliants are used on the taller varieties of cotton which are machine picked for lint and seed cotton, while desiccants usually are used on short, stormproof cotton varieties of lower yield that are harvested by mechanical stripper equipment. More than 99 percent of the national cotton area is harvested mechanically. The two principal harvest methods are machine picking, with 70 percent of the harvest from 61 percent of the area, and machine stripping, with 29 percent of the harvest from 39 percent of the area. Picking is practiced throughout the cotton regions of the U.S., while stripping is limited chiefly to the dry plains of Texas and Oklahoma.

Defoliation may be defined as the process by which leaves are abscised from the plant. The process may be initiated by drought stress, low temperatures or disease, or it may be chemically induced by topically applied defoliant agents or by overfertilization. The process helps lodged plants to return to an erect position, removes the leaves which can clog the spindles of the picking machine and strain the fiber, accelerates the opening of mature bolls, and reduces boll rots. Desiccation by chemicals is the drying or rapid killing of the leaf blades and petioles, with the leaves remaining in a withered state on the plant. Harvest-aid chemicals are applied to cotton as water-based spray, either by aircraft or by a ground machine.

Mechanical cotton pickers, as the name implies, pick locks of seed cotton from open cotton bolls and leave the empty burs and unopened bolls on the plant. Requiring only one operator, typical modern pickers are self propelled and can simultaneously harvest two rows of cotton at a speed of 1.1 to 1.6 meters per second (2.5 - 3.6 mph). When the picker basket gets filled with seed cotton, the machine is driven to a cotton trailer at the edge of the field. As the basket is hydraulically raised and tilted, the top swings open, allowing the cotton to fall into the trailer. When the trailer is full, it is pulled from the field, usually by pick-up truck, and taken to a cotton gin.

Mechanical cotton strippers remove open and unopened bolls, along with burs, leaves and stems from cotton plants, leaving only bare branches. Tractor-mounted, tractor-pulled or self propelled, strippers require only one operator. They harvest from one to four rows of cotton at speeds of 1.8 to 2.7 m/s (4.0 - 6.0 mph). After the cotton is stripped, it enters a conveying system that carries it from the stripping unit to an elevator. Most conveyers utilize either augers or a series of rotating spike-toothed cylinders to move the cotton, accomplishing some cleaning by moving the cotton over perforated, slotted or wire mesh screen. Dry plant material (burs, stems and leaves) is crushed and dropped through openings to the ground. Blown air is sometimes used to assist cleaning.

6.16.2 Emissions and Controls

Emission factors for the drifting of major chemicals applied to cotton are compiled from literature and reported in Reference 1. In addition, drift losses from arsenic acid spraying were developed by field testing. Two off-target collection stations, with six air samplers each, were located downwind from the ground spraying operations. The measured concentration was applied to an infinite line source atmosphere diffusion model (in reverse) to calculate the drift emission rate. This was in turn used for the final emission factor calculation. The emissions occur from July to October, preceding by two weeks the period of harvest in each cotton producing region. The drift emission factor for arsenic acid is eight times lower than previously estimated, since Reference 1 used a ground rig rather than an airplane, and because of the low volatility of arsenic acid. Various methods of controlling drop size, proper timing of application, and modification of equipment are practices which can reduce drift hazards. Fluid additives have been used that increase the viscosity of the spray formulation, and thus decrease the number of fine droplets (<100 μm).

Spray nozzle design and orientation also control the droplet size spectrum. Drift emission factors for the defoliation of desiccation of cotton are listed in Table 6.16-1.

Table 6.16-1. EMISSION FACTORS FOR DEFOLIATION OR DESICCATION OF COTTON[a]

EMISSION FACTOR RATING: C

Pollutant	Emission factor[b]	
	lb/ton	g/kg
Sodium chlorate	20.0	10.0
DEF	20.0	10.0
Arsenic acid	12.2	6.1
Paraquat	20.0	10.0

[a]Reference 1
[b]Factor is in terms of quantity of drift per quantity applied.

Three unit operations are involved in mechanical harvesting of cotton: harvesting, trailer loading (basket dumping) and transport of trailers in the field. Emissions from these operations are in the form of solid particulates. Particulate emissions (<7 μm mean aerodynamic diameter) from these operations were developed in Reference 2. The particulates are composed mainly of raw cotton dust and solid dust, which contains free silica. Minor emissions include small quantities of pesticide, defoliant and desiccant residues that are present in the emitted particulates. Dust concentrations from harvesting were measured by following each harvesting machine through the field at a constant distance directly downwind from the machine, while staying in the visible plume centerline. The procedure for trailer loading was the same, but since the trailer is stationary while being loaded, it was necessary only to stand a fixed distance directly downwind from the trailer while the plume or puff passed over. Readings were taken upwind of all field activity to get background concentrations. Particulate emission factors for the principal types of cotton harvesting operations in the U.S. are shown in Table 6.16-2. The factors are based on average machine speed of 1.34 m/s (3.0 mph) for pickers and 2.25 m/s (5.03 mph) for strippers, on a basket capacity of 109 kg (240 lb), on a trailer capacity of 6 baskets, on a lint cotton yield of 63.0 metric tons/km^2 (1.17 bale/acre) for pickers and 41.2 metric tons/km^2 (.77 bale/acre) for strippers, and on a transport speed of 4.47 m/s (10.0 mph). Analysis of particulate samples showed average free silica content of 7.9 percent for mechanical cotton picking and 2.3 percent for mechanical cotton stripping. Estimated maximum percentages for pesticides, defoliants and desiccants from harvesting are also noted in Table 6.16-2. No current cotton harvesting equipment or practices provide for control of emissions. In fact, equipment design and operating practices tend to maximize emissions. Preharvest treatment (defoliation and desiccation) and harvest practices are timed to minimize moisture and trash content, so they also tend to maximize emissions. Soil dust emissions from field transport can be reduced by lowering vehicle speed.

Table 6.16-2. PARTICULATE EMISSION FACTORS FOR COTTON HARVESTING OPERATIONS[a]

EMISSION FACTOR RATING: C

Type of harvester	Harvesting		Trailer loading		Transport		Total	
	kg/km²	lb/mi²	kg/km²	lb/mi²	kg/km²	lb/mi²	kg/km²	lb/mi²
Picker[c]								
Two-row, with basket	.46	2.6	.070	.40	.43	2.5	.96	5.4
Stripper[d]								
Two-row, pulled trailer	7.4	42	–[b]	–	.28	1.6	7.7	44
Two-row, with basket	2.3	13	.092	.52	.28	1.6	2.7	15
Four-row, with basket	2.3	13	.092	.52	.28	1.6	2.7	15
Weighted average[e]	4.3	24	.056	.32	.28	1.6	4.6	26

[a]Emission factors are from Reference 2 for particulate of <7 μm mean aerodynamic diameter.

[b]Not applicable

[c]Free silica content is 7.9%; maximum content of pesticides and defoliants is 0.02%.

[d]Free silica content is 2.3%; maximum content of pesticides and desiccants is 0.2%.

[e]The weighted average stripping factors are based on estimates that 2% of all strippers are four-row models with baskets, and of the remainder, 40% are two-row models pulling trailers and 60% are two-row models with mounted baskets.

References for Section 6.16

1. J. A. Peters and T. R. Blackwood, *Source Assessment: Defoliation of Cotton–State of the Art*, EPA-600/2-77-107g, U.S. Environmental Protection Agency, Research Triangle Park, NC, July 1977.

2. J. W. Snyder and T. R. Blackwood, *Source Assessment: Mechanical Harvesting of Cotton–State of the Art*, EPA-600/2-77-107d, U. S. Environmental Protection Agency, Research Triangle Park, NC, July 1977.

6.17 HARVESTING OF GRAIN

6.17.1 General[1]

Harvesting of grain refers to the activities performed to obtain the cereal kernels of the plant for grain or the entire plant for forage and/or silage uses. These activities are accomplished by machines that cut, thresh, screen, clean, bind, pick, and shell the crops in the field. Harvesting also includes loading harvested crops into trucks and transporting crops on the grain field.

Crops harvested for their cereal kernels are cut as close as possible to the inflorescence (the flowering portion containing the kernels). This portion is threshed, screened and cleaned to separate the kernels. The grain is stored in the harvest machine while the remainder of the plant is discharged back onto the field.

Combines perform all of the above activities in one operation. Binder machines only cut the grain plants and tie them into bundles or leave them in a row in the field (called a windrow). The bundles are allowed to dry for threshing later by a combine with a pickup attachment.

Corn harvesting requires the only exception to the above procedures. Corn is harvested by mechanical pickers, picker/shellers, and combines with corn head attachments. These machines cut and husk the ears from the standing stalk. The sheller unit also removes the kernels from the ear. After husking, a binder is sometimes used to bundle entire plants into piles (called shocks) to dry.

For forage and/or silage, mowers, crushers, windrowers, field choppers, binders, and similar cutting machines are used to harvest grasses, stalks and cereal kernels. These machines cut the plants as close to the ground as possible and leave them in a windrow. The plants are later picked up and tied by a baler.

Harvested crops are loaded onto trucks in the field. Grain kernels are loaded through a spout from the combine, and forage and silage bales are manually or mechanically placed in the trucks. The harvested crop is then transported from the field to a storage facility.

6.17.2 Emissions and Controls[1]

Emissions are generated by three grain harvesting operations, (1) crop handling by the harvest machine, (2) loading of the harvested crop into trucks, and (3) transport by trucks on the field. Particulate matter, composed of soil dust and plant tissue fragments (chaff) may be entrained by wind. Particulate emissions from these operations (<7μm mean aerodynamic diameter) are developed in Reference 1. For this study, collection stations with air samplers were located downwind (leeward) from the harvesting operations, and dust concentrations were

measured at the visible plume centerline and at a constant distance behind the combines. For product loading, since the trailer is stationary while being loaded, it was necessary only to take measurements a fixed distance downwind from the trailer while the plume or puff passed over. The concentration measured for harvesting and loading was applied to a point source atmospheric diffusion model to calculate the source emission rate. For field transport, the air samplers were again placed a fixed distance downwind from the path of the truck, but this time the concentration measured was applied to a line source diffusion model. Readings taken upwind of all field activity gave background concentrations. Particulate emission factors for wheat and sorghum harvesting operations are shown in Table 6.17-1.

There are no control techniques specifically implemented for the reduction of air pollution emissions from grain harvesting. However, several practices and occurences do affect emission rates and concentration. The use of terraces, contouring, and stripcropping to inhibit soil erosion will suppress the entrainment of harvested crop fragments in the wind. Shelterbelts, positioned perpendicular to the prevailing wind, will lower emissions by reducing the wind velocity across the field. By minimizing tillage and avoiding residue burning, the soil will remain consolidated and less prone to disturbance from transport activities.

Table 6.17-1. EMISSION RATES/FACTORS FROM THE HARVESTING GRAIN[a]

EMISSION FACTOR RATING: D

	Emission rate[b]				Emission factor[c]			
	Wheat		Sorghum		Wheat		Sorghum	
Operation	lb/hr	mg/sec	lb/hr	mg/sec	lb/mi^2	g/km^2	lb/mi^2	g/km^2
Harvest machine	0.027	3.4	0.18	23.0	0.96	170.0	6.5	1100.0
Truck loading	0.014	1.8	0.014	1.8	0.07	12.0	0.13	22.0
Field transport	0.37	47.0	0.37	47.0	0.65	110.0	1.2	200.0

[a]Reference 1.
[b]Assumptions from Reference 1 are an average combine speed of 3.36 meters per second, combine swath width of 6.07 meters, and a field transport speed of 4.48 meters per second.
[c]In addition to Note b, assumptions are a truck loading time of six minutes, a truck capacity of .052 km^2 for wheat and .029 km^2 for sorghum, and a filed truck travel time of 125 seconds per load.

Reference for Section 1.14

1. R. A. Wachten and T. R. Blackwood, Source Assessment: Harvesting of Grain, State of the Art, EPA-600/2-79-107f, U. S. Environmental Protection Agency, Research Triangle Park, NC, July 1977.

6.18 AMMONIUM SULFATE MANUFACTURE

6.18.1 General[1]

Ammonium sulfate, $[NH_4]_2SO_4$, is commonly used as a fertilizer. About 90 percent of ammonium sulfate is produced by three types of facilities, caprolactam byproduct, synthetic, and coke oven byproduct plants. The remainder is produced as a byproduct of nickel manufacture from ore concentrates, methyl methacrylate manufacture, and ammonia scrubbing of tail gas at sulfuric acid plants.

During the manufacture of caprolactam, $[CH_2]_5COHN$, ammonium sulfate is produced from the oximation process stream and the rearrangement reaction stream. Synthetic ammonium sulfate is produced by the direct combination of ammonia and sulfuric acid in a reactor. Coke oven byproduct ammonium sulfate is produced by reacting ammonia recovered from coke oven offgas with sulfuric acid. Figure 6.18-1 is a process flow diagram for each of the three primary commercial processes.

After formation of the ammonium sulfate solution, operations of each process are similar. Ammonium sulfate crystals are formed by continuously circulating an ammonium sulfate liquor through an evaporator to thicken the solution. Ammonium sulfate crystals are separated from the liquor in the centrifuge. The saturated liquor is returned to the dilute ammonium sulfate brine of the evaporator. The crystals, with about 1 to 2.5 percent moisture by weight after the centrifuge, are fed to either a fluidized bed or rotary drum dryer. Fluidized bed dryers are continuously steam heated, and rotary dryers are either directly fired with oil or natural gas, or they use steam heated air. At coke oven byproduct plants, rotary drum dryers may be used in place of a centrifuge and dryer. On the filter of these dryers, a crystal layer is deposited which is removed from the drum by a scraper or a knife.

The volume of ammonium sulfate in the dryer exhaust gas varies according to production process and dryer type. A gas flow rate of 620 scm/Mg of product (20,000 scf/ton) is considered representative of a direct fired rotary drum dryer. A gas flow of 2,500 scm/Mg of product (80,000 scf/ton) is considered representative of a steam heated fluidized bed dryer. Dryer exhaust gases are passed through a particulate collection device, usually a wet scrubber, for product recovery and for pollution control.

The ammonium sulfate crystals are conveyed from the dryer to an enclosure where they are screened to product specifications, generally to coarse and fine products. The screening is enclosed to control dust in the building.

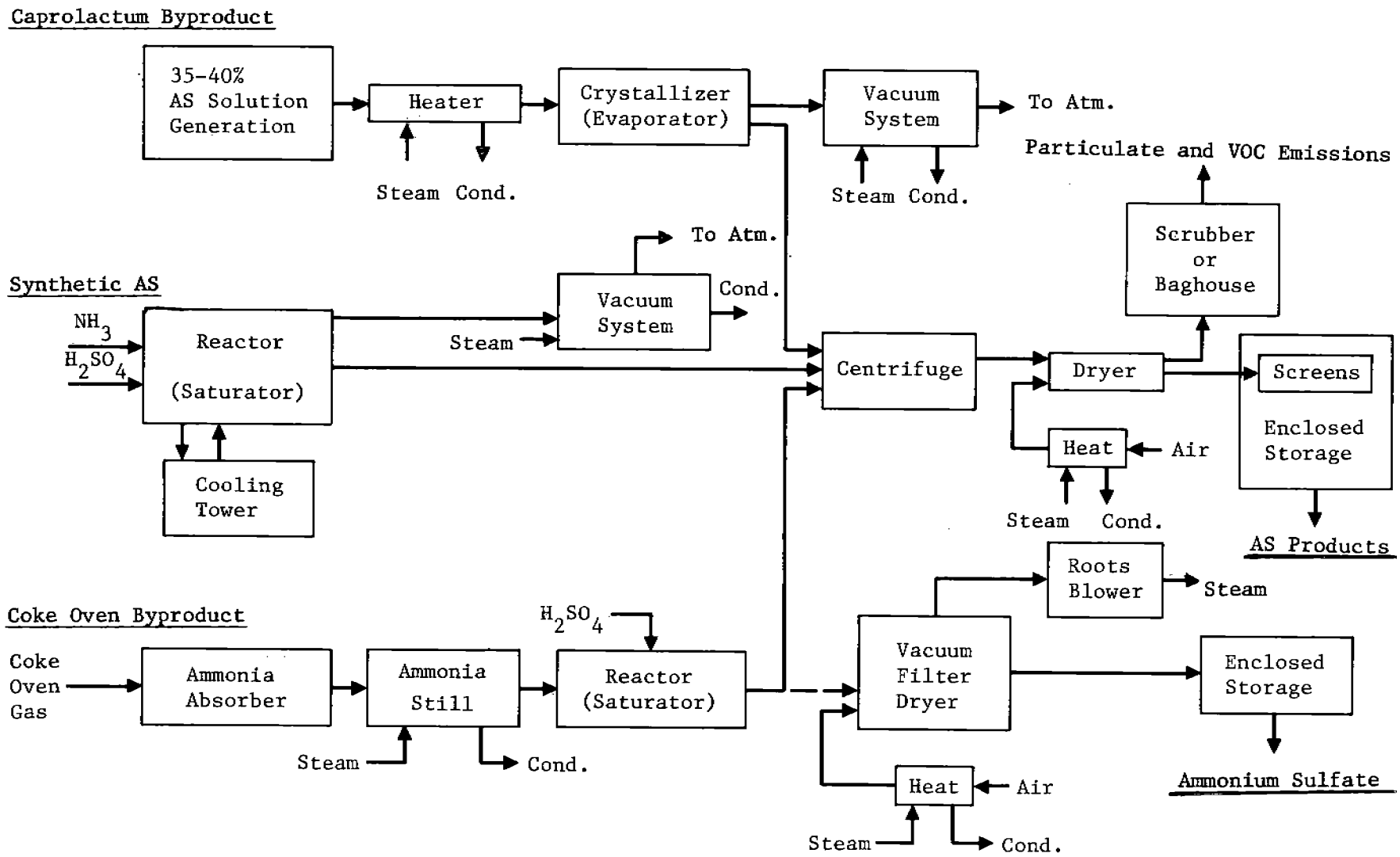

Figure 6.18-1. Diagram of Ammonium Sulfate (AS) processes.

6.18.2 Emissions and Controls

Ammonium sulfate particulate is the principal pollutant emitted to the atmosphere from the manufacturing plants, nearly all of it being contained in the gaseous exhaust of the dryers. Other plant processes, such as evaporation, screening, and materials handling, are not significant sources of emissions.

The particulate emission rate of a dryer depends on the gas velocity and the particle size distribution. Since gas velocity varies according to the dryer type, emission rates also vary. Generally, the gas velocity of fluidized bed dryers is higher than for most rotary drum dryers, and particulate emission rates are also higher. The smaller the particle, the easier it is removed by the gas stream of either type of dryer.

At caprolactam byproduct plants, volatile organic compounds (VOC) are emitted from the dryers. Emissions of caprolactam vapor are at least two orders of magnitude lower than the particulate emissions.

Wet scrubbers, such as venturi and centrifuge, are most suitable for reducing particulate emissions from the dryers. Wet scrubbers use process streams as the scrubbing liquid. This allows the collected particulate to be recycled easily to the production system.

Table 6.18-1 shows the uncontrolled and controlled emission factors for the various dryer types. The VOC emissions shown in Table 6.18-1 apply only to caprolactam byproduct plants which may use either a fluidized bed or rotary drum dryer.

TABLE 6.18-1. EMISSION FACTORS FOR AMMONIUM SULFATE MANUFACTURE[a]

EMISSION FACTOR RATING: B

Dryer Type & Controls	Particulates		Volatile Organic Compounds[b]	
	kg/Mg	lb/ton	kg/Mg	lb/ton
Rotary dryers				
Uncontrolled	23	46	0.74	1.48
Wet scrubber	0.12	0.24	0.11	0.22
Fluidized bed dryers				
Uncontrolled	109	218	0.74	1.48
Wet scrubber	0.14	0.28	0.11	0.22

[a]Expressed as emissions by weight per unit of ammonium sulfate production by weight.
[b]VOC emissions occur only at caprolactam plants using either type of dryer. The emissions are caprolactam vapor.

Reference for Section 6.18

1. Ammonium Sulfate Manufacture - Background Information for Proposed Emission Standards, EPA-450/3-79-034a, U.S. Environmental Protection Agency, Research Triangle Park, NC, December 1979.

7.1 PRIMARY ALUMINUM PRODUCTION

7.1.1 Process Description[1-2]

The base ore for primary aluminum production is bauxite, a hydrated oxide of aluminum consisting of 30 to 70 percent alumina (Al_2O_3) and lesser amounts of iron, silicon and titanium. The bauxite ore is first purified to alumina by the Bayer process, and this is then reduced to elemental aluminum. The production of alumina and the reduction of alumina to aluminum are seldom accomplished at the same facility. A schematic diagram of the primary production of aluminum is shown at Figure 7.1-1.

In the Bayer process, the ore is dried, ground in ball mills and mixed with a leaching solution of sodium hydroxide at an elevated temperature and pressure, producing a sodium aluminate solution which is separated from the bauxite impurities and cooled. As the solution cools, the hydrated aluminum oxide ($Al_2O_3 \cdot 3H_2O$) precipitates. Following separation and washing to remove iron oxide, silica and other impurities, the hydrated aluminum oxide is dried and calcined to produce a crystalline form of alumina (Al_2O_3), advantageous for electrolysis.

Aluminum metal is manufactured by the Hall-Heroult process, which involves the electrolytic reduction of alumina dissolved in a molten salt bath of cryolite (Na_3AlF_6) and various salt additives:

$$\underset{\text{Alumina}}{2Al_2O_3} \xrightarrow[\text{(reduction)}]{\text{Electrolysis}} \underset{\text{Aluminum}}{4Al} + \underset{\text{Oxygen}}{3O_2} \qquad (1)$$

The electrolytic reduction occurs in shallow rectangular cells, or "pots", which are steel shells lined with carbon. Carbon electrodes extend into the pot and serve as the anodes, and the carbon lining the steel shell is the cathode. Molten cryolite functions as both the electrolyte and the solvent for the alumina. Electrical resistance to the current passing between the electrodes generates heat that maintains cell operating temperatures between 950° and 1000°C (1730° and 1830°F). Aluminum is deposited at the cathode, where it remains as molten metal below the surface of the cryolite bath. The carbon anodes are continuously depleted by the reaction of oxygen (formed during the reaction) and anode carbon, to produce carbon monoxide and carbon dioxide. Carbon consumption and other raw material and energy requirements for aluminum production are summarized in Table 7.1-1. The aluminum product is periodically tapped beneath the cryolite cover and is fluxed to remove trace impurities.

Aluminum reduction cells are distinguished by the anode type and configuration used in the pots. Three types of pots are currently used, prebaked (PB), horizontal stud Soderberg (HSS), and vertical stud Soderberg (VSS). Most of the aluminum produced in the U. S. is processed in PB cells.

Anodes are produced as an ancillary operation at the reduction plant. In the paste preparation plant, petroleum coke is mixed with a pitch binder

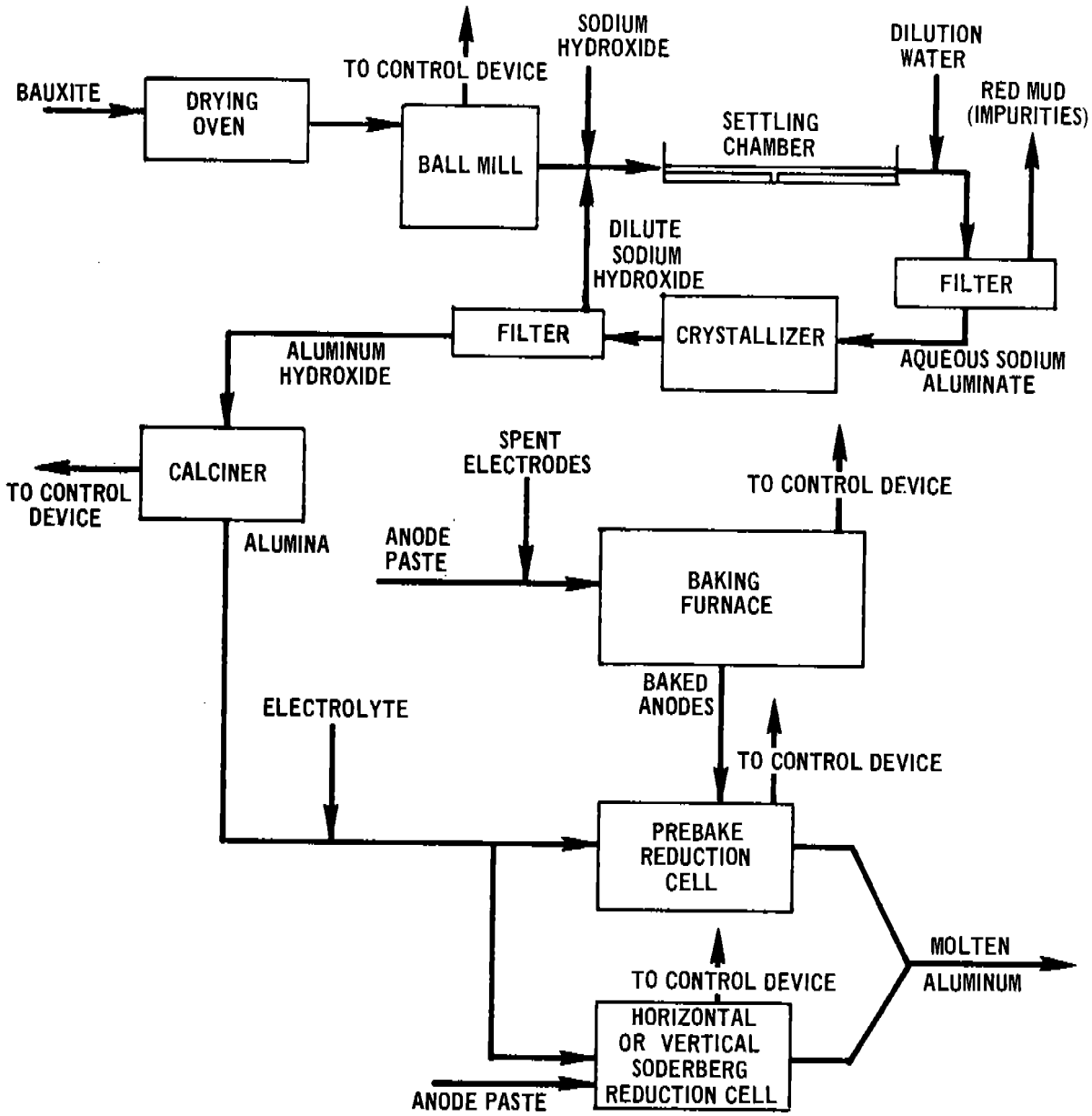

Figure 7.1-1. Schematic diagram of primary aluminum production process.

to form a paste which is used for Soderberg cell anodes, and for green anodes for prebake cells. Paste preparation includes crushing, grinding and screening of coke and cleaned spent anodes (butts), and blending with a pitch binder in a steam jacketed mixer. For Soderberg anodes, the thick paste mixture is transferred directly to the potroom for addition to the anode casings. In prebake anode preparation, the paste mixture is molded to form self supporting green anode blocks. The blocks are baked in a direct fired ring furnace or an indirect fired tunnel kiln. Baked anodes are then transferred to the rodding room, where the electrodes are attached. Volatile organic vapors from the pitch paste are emitted during anode baking, and most are destroyed in the baking furnace. The baked anodes, typically 14 to 24 per cell, are attached to metal rods and serve as replaceable anodes.

TABLE 7.1-1. RAW MATERIAL AND ENERGY REQUIREMENTS FOR ALUMINUM PRODUCTION

Parameter	Typical value
Cell operating temperature	~ 950°C (~ 1740°F)
Current through pot line	60,000 - 125,000 amperes
Voltage drop per cell	4.3 - 5.2
Current efficiency	85 - 90%
Energy required	13.2 - 18.7 kwh/kg aluminum (6.0 - 8.5 kwh/lb aluminum)
Weight alumina consumed	1.89 - 1.92 kg(lb) Al_2O_3/kg(lb) aluminum
Weight electrolyte fluoride consumed	0.03 - 0.10 kg(lb) fluoride/kg(lb) aluminum
Weight carbon electrode consumed	0.45 - 0.55 kg(lb) electrode/kg(lb) aluminum

In the electrolytic reduction of alumina, the carbon anodes are lowered into the cell and consumed at a rate of about 2.5 centimeters (1 inch) per day. Prebaked cells are preferred over Soderberg cells for their lower power requirements, reduced generation of volatile pitch vapors from the carbon anodes, and provision for better cell hooding to capture emissions.

The second most commonly used reduction cell is the horizontal stud Soderberg (HSS). This type of cell uses a "continuous" carbon anode. Green anode paste is periodically added at the top of the anode casing of the pot and is baked by the heat of the cell to a solid carbon mass as the material moves down the casing. The cell casing consists of aluminum sheeting and perforated steel channels, through which electrode connections (studs) are inserted horizontally into the anode paste. During reduction, as the baking anode is lowered, the lower row of studs and the bottom channel are removed, and the flexible electrical connectors are moved to a higher row of studs. High molecular weight organics from the anode paste are released, along with other cell emissions. The heavy tars can cause plugging of exhaust ducts, fans and emission control equipment.

The vertical stud Soderberg (VSS) cell is similar to the HSS cell, except that the studs are mounted vertically in the anode paste. Gases from the VSS

cells can be ducted to gas burners, and the tar and oils combusted. The construction of the HSS cell prevents the installation of an integral gas collection device, and hooding is restricted to a canopy or skirt at the base of the cell, where the hot anode enters the cell bath.

Casting involves pouring molten aluminum into molds and cooling it with water. At some plants, before casting, the molten aluminum may be batch treated in furnaces to remove oxide, gaseous impurities and active metals such as sodium and magnesium. One process consists of adding a flux of chloride and fluoride salts and then bubbling chlorine gas, usually mixed with an inert gas, through the molten mixture. Chlorine reacts with the impurities to form HCl, Al_2O_3 and metal chloride emissions. A dross forms and floats on the molten aluminum and is removed before casting.[11]

7.1.2 Emissions and Controls[1-3,10]

Controlled and uncontrolled emission factors for total particulate matter, fluoride and sulfur oxides are presented in Table 7.1-2. Fugitive particulate and fluoride emission factors for reduction cells are also presented in this Table.

In the preparation of refined alumina from bauxite, large amounts of particulates are generated during the calcining of hydrated aluminum oxide, but the economic value of this dust is such that extensive controls are employed to reduce emissions to relatively small quantities. Small amounts of particulates are emitted from the bauxite grinding and materials handling processes.

Emissions from aluminum reduction processes consist primarily of gaseous hydrogen fluoride and particulate fluorides, alumina, carbon monoxide, volatile organics, and sulfur dioxide from the reduction cells, and fluorides, vaporized organics and sulfur dioxide from the anode baking furnaces.

The source of fluoride emissions from reduction cells is the fluoride electrolyte, which contains cryolite, aluminum fluoride (AlF_3), and fluorspar (CaF_2). For normal operation, the weight, or "bath", ratio of sodium fluoride (NaF) to AlF_3 is maintained between 1.36 and 1.43 by the addition of AlF_3. This increases the cell current efficiency and lowers the bath melting point, permitting lower operating temperature in the cell. Cell fluoride emissions are decreased by lowering the operating temperature. The ratio of gaseous (mainly hydrogen fluoride and silicon tetrafluoride) to particulate fluorides varies from 1.2 to 1.7 with PB and HSS cells, but attains a value of approximately 3.0 with VSS cells.

Particulate emissions from reduction cells consist of alumina and carbon from anode dusting, cryolite, aluminum fluoride, calcium fluoride, chiolite ($Na_5Al_3F_{14}$) and ferric oxide. Representative size distributions for particulate emissions from PB cells and HSS cells are presented in Table 7.1-3. Particulates less than 1 micron in diameter represent the largest fraction (35 - 44 percent) for uncontrolled emissions. In one HSS cell, uncontrolled particulate emissions from one HSS cell had a mass mean particle diameter of 5.5 microns. Thirty percent by mass of the particles were submicron, and 16 percent were less than 0.2 microns in diameter.[7]

TABLE 7.1-2. EMISSION FACTORS FOR PRIMARY ALUMINUM PRODUCTION PROCESSES[a].

EMISSION FACTOR RATING: A

Operation	Total Particulate[b] kg/Mg	Total Particulate[b] lb/ton	Gaseous Fluoride (HF) kg/Mg	Gaseous Fluoride (HF) lb/ton	Particulate Fluoride (F) kg/Mg	Particulate Fluoride (F) lb/ton	Sulfur Oxides kg/Mg	Sulfur Oxides lb/ton	References
Bauxite grinding									
Uncontrolled	3.0	6.0	Neg	Neg	NA	NA	NA	NA	1,3
Spray tower	0.9	1.8	Neg	Neg	NA	NA	NA	NA	1,3
Floating bed scrubber	0.85	1.7	Neg	Neg	NA	NA	NA	NA	1,3
Quench tower and spray screen	0.5	1.0	Neg	Neg	NA	NA	NA	NA	1,3
Electrostatic precipitator (ESP)	0.06	0.12	Neg	Neg	NA	NA	NA	NA	1,3
Aluminum hydroxide									
Calcining									
Uncontrolled	100.0	200.0	Neg	Neg	NA	NA	NA	NA	1,3
Spray tower	30.0	60.0	Neg	Neg	NA	NA	NA	NA	1,3
Floating bed scrubber	28.0	56.0	Neg	Neg	NA	NA	NA	NA	1,3
Quench tower	17.0	34.0	Neg	Neg	NA	NA	NA	NA	1,3
ESP	2.0	4.0	Neg	Neg	NA	NA	NA	NA	1,3
Anode baking furnace									
Uncontrolled	1.5	3.0	0.45	0.9	0.05	0.1	c	c	2,9,10
Fugitive	NA	NA	NA	NA	NA	NA	NA	NA	
Spray tower	0.375	0.75	0.02	0.04	0.015	0.03	NA	NA	9
ESP	0.375	0.75	0.02	0.04	0.015	0.03	NA	NA	2
Dry alumina scrubber	0.03	0.06	0.0045	0.009	0.001	0.002	NA	NA	2,9
Prebake cell									
Uncontrolled	47.0	94.0	12.0	24.0	10.0	20.0	c	c	1,2,9,10
Fugitive	2.5	5.0	0.6	1.2	0.5	1.0	NA	NA	2,9
Emissions to collector	44.5	89.0	11.4	22.8	9.5	19.0	NA	NA	2
Multiple cyclones	9.8	19.6	11.4	22.8	2.1	4.2	NA	NA	2
Dry alumina scrubber	0.9	1.8	0.1	0.2	0.2	0.4	NA	NA	2,9
Dry ESP + spray tower	2.25	4.5	0.7	1.4	1.7	3.4	NA	NA	2,9
Spray tower	8.9	17.8	0.7	1.4	1.9	3.8	NA	NA	2
Floating bed scrubber	8.9	17.8	0.25	0.5	1.9	3.8	NA	NA	2
Coated bag filter dry scrubber	0.9	1.8	1.7	3.4	0.2	0.4	NA	NA	2
Cross flow packed bed	13.15	26.3	3.25	6.7	2.8	5.6	NA	NA	9
Dry + second scrubber	0.35	0.7	0.2	0.4	0.15	0.3	NA	NA	9

TABLE 7.1-2 (CONT.). EMISSION FACTORS FOR PRIMARY ALUMINUM PRODUCTION PROCESSES[a]

EMISSION FACTOR RATING: A

Operation	Total Particulate[b]		Gaseous Fluoride (HF)		Particulate Fluoride (F)		Sulfur Oxides		References
	Kg/Mg	lb/ton	kg/Mg	lb/ton	kg/Mg	lb/ton	kg/Mg	lb/ton	
Vertical Soderberg stud cell									
Uncontrolled	39.0	78.0	16.5	33.0	5.5	11.0	NA	NA	2,9
Fugitive	6.0	12.0	2.45	4.9	0.85	1.7	NA	NA	9
Emissions to collector	33.0	66.0	14.05	28.1	4.65	9.3	NA	NA	9
Spray tower	8.25	16.5	0.15	0.3	1.15	2.3	NA	NA	2
Venturi scrubber	1.3	2.6	0.15	0.3	0.2	0.4	NA	NA	2
Multiple cyclones	16.5	33.0	14.05	28.1	2.35	4.7	NA	NA	2
Dry alumina scrubber	0.65	1.3	0.15	0.3	0.1	0.2	NA	NA	2
Scrubber + ESP + spray screen + scrubber	3.85	7.7	0.75	1.5	0.65	1.3	NA	NA	
Horizontal Soderberg stud cell									
Uncontrolled	49.0	98.0	11.0	22.0	6.0	12.0	NA	NA	2,9
Fugitive	5.0	10.0	1.1	2.2	0.6	1.2	NA	NA	2,9
Emissions to collector	44.0	88.0	9.9	19.8	5.4	10.8	NA	NA	2,9
Spray tower	11.0	22.0	3.75	7.5	1.35	2.7	NA	NA	2,9
Floating bed scrubber	9.7	19.4	0.2	0.4	1.2	2.4	NA	NA	2
Scrubber + wet ESP	0.9	1.8	0.1	0.2	0.1	0.2	NA	NA	2,9
Web ESP	0.9	1.8	0.5	1.0	0.1	0.2	NA	NA	9
Dry alumina scrubber	0.9	1.8	0.2	0.4	0.1	0.2	NA	NA	9

[a]For bauxite grinding, expressed as kg/Mg (lb/ton) of bauxite processed. For calcining of aluminum hydroxide, expressed as kg/Mg (lb/ton) of alumina produced. All other factors are per Mg (ton) of molten aluminum product. Emission factors for sulfur oxides have C ratings. NA = not available.

[b]Includes particulate fluorides.

[c]Anode baking furnace, uncontrolled SO_2 emissions (excluding furnace fuel combustion emissions):

$$20(C)(S)(1-.01\ K)\ \text{kg/Mg}\ [40(C)(S)(1-.01\ K)\ \text{lb/ton}]$$

Prebake (reduction) cell, uncontrolled SO_2 emissions:

$$0.2(C)(S)(K)\ \text{kg/Mg}\ [0.4(C)(S)(K)\ \text{lb/ton}]$$

Where: C = Anode consumption* during electrolysis, lb anode consumed/lb Al produced
S = % sulfur in anode before baking
K = % of total SO_2 emitted by prebake (reduction) cells

*Anode consumption weight is weight of anode paste (coke + pitch) before baking.

TABLE 7.1-3. REPRESENTATIVE PARTICLE SIZE DISTRIBUTIONS OF UNCONTROLLED EMISSIONS FROM PREBAKED AND HORIZONTAL STUD SODERBERG CELLS[a]

Size range (μ)	Particles (wt %)	
	PB	HSS
<1	35	44
1 to 5	25	26
5 to 10	8	8
10 to 20	5	6
20 to 44	5	4
>44		

[a]Reference 1.

Emissions from reduction cells also include hydrocarbons or organics, carbon monoxide and sulfur oxides. Small amounts of hydrocarbons are released by PB pots, and larger amounts are emitted from HSS and VSS pots. In vertical cells, these organics are incinerated in integral gas burners. Sulfur oxides originate from sulfur in the anode coke and pitch. The concentrations of sulfur oxides in VSS cell emissions range from 200 to 300 parts per million. Emissions from PB plants usually have SO_2 concentrations ranging from 20 to 30 parts per million.

Emissions from anode bake ovens include the products of fuel combustion; high boiling organics from the cracking, distillation and oxidation of paste binder pitch; sulfur dioxide from the sulfur in carbon paste, primarily from the petroleum coke, fluorides from recycled anode butts; and other particulate matter. The concentrations of uncontrolled SO_2 emissions from anode baking furnaces range from 5 to 47 parts per million (based on 3 percent sulfur in coke.)[8]

A variety of control devices has been used to abate emissions from reduction cells and anode baking furnaces. To control gaseous and particulate fluorides and particulate emissions, one or more types of wet scrubbers (spray tower and chambers, quench towers, floating beds, packed beds, venturis, and self induced sprays have been applied to all three types of reduction cells and to anode baking furnaces. Also, particulate control methods such as electrostatic precipitators (wet and dry), multiple cyclones and dry alumina scrubbers (fluid bed, injected, and coated filter types) are employed with baking furnaces and on all three cell types. Also, the alumina adsorption systems are being used on all three cell types to control both gaseous and particulate fluorides by passing the pot offgases through the entering alumina feed, which adsorbs the fluorides. This technique has an overall control efficiency of 98 to 99 percent. Baghouses are then used to collect residual fluorides entrained in the alumina and to recycle them to the reduction cells. Wet electrostatic precipitators approach adsorption in particulate removal efficiency but must be coupled to a wet scrubber or coated baghouse to catch hydrogen fluoride.

Scrubber systems also remove a portion of the SO_2 emissions. These emissions could be reduced by wet scrubbing or by reducing the quantity of sulfur in the anode coke and pitch, i. e., calcining the coke.

In the hydrated aluminum oxide calcining, bauxite grinding and materials handling operations, various dry dust collection devices (centrifugal collectors, multiple cyclones, or electrostatic precipitators and/or wet scrubbers) have been used.

Potential sources of fugitive particulate emissions in the primary aluminum industry are bauxite grinding, materials handling, anode baking and three types of reduction cells (see Table 7.1-2). These fugitives probably have particle size distributions similar to those presented in Table 7.1-3.

References for Section 7.1

1. Engineering and Cost Effectiveness Study of Fluoride Emissions Control, Volume I, APTD-0945, U. S. Environmental Protection Agency, Research Triangle Park, NC, January 1972.

2. Air Pollution Control in the Primary Aluminum Industry, Volume I, EPA-450/3-73-004a, U. S. Environmental Protection Agency, Research Triangle Park, NC, July 1973.

3. Particulate Pollutant System Study, Volume I, APTD-0743, U. S. Environmental Protection Agency, Research Triangle Park, NC, May 1971.

4. Emissions from Wet Scrubbing System, Report Number Y-7730-E, York Research Corp., Stamford, CT, May 1972.

5. Emissions from Primary Aluminum Smelting Plant, Report Number Y-7730-B, York Research Corp., Stamford, CT, June 1972.

6. Emissions from the Wet Scrubber System, Report Number Y-7730-F, York Research Corp., Stamford, CT, June 1972.

7. T. R. Hanna and M. J. Pilat, "Size Distribution of Particulates Emitted from a Horizontal Spike Soderberg Aluminum Reduction Cell", Journal of the Air Pollution Control Association, 22:533-536, July 1972.

8. Background Information for Standards of Performance: Primary Aluminum Industry, Volume 1: Proposed Standards, EPA-450/2-74-020a, U. S. Environmental Protection Agency, Research Triangle Park, NC, October 1974.

9. Primary Aluminum: Guidelines for Control of Fluoride Emissions from Existing Primary Aluminum Plants, EPA-450/2-78-049b, U. S. Environmental Protection Agency, Research Triangle Park, NC, December 1979.

10. Written communication from T. F. Albee, Reynolds Aluminum, Richmond, VA, to A. A. MacQueen, U. S. Environmental Protection Agency, Research Triangle Park, NC, October 20, 1982.

11. Environmental Assessment: Primary Aluminum, Interim report, U. S. Environmental Protection Agency, Cincinnati, OH, October 1979.

7.2 COKE MANUFACTURING

7.2.1 Process Description

Coking is the process of destructive distillation, or the heating of coal in an atmosphere of low oxygen content. During this process, organic compounds in the coal break down to yield gases and a relatively involatile residue. The primary method for the manufacture of coke is the byproduct method, which accounts for more than 98 percent of U.S. coke production.

The byproduct method is oriented to the recovery of gases produced during the coking cycle. Narrow rectangular slot-type coking ovens are constructed of silica brick, and a battery is commonly made up of a series of 40 to 70 of these ovens interspaced with heating flues. A larry car runs along the top of the coke battery, charging the ovens with coal through ports. After each charging, the ports are sealed, and heat is supplied to the ovens by combustion of gases passing through the flues between the ovens. The fuels used in the combustion process are natural gas, coke oven gas or blast furnace gas. In the ovens, coke is formed first near the brick walls and then toward the center, where temperatures are 2000° - 2100°F (1100° - 1150°C). After a period of 16 - 20 hours, the coking process is complete. Coke is pushed by a ram from the oven into a quenching car. The quenching car of hot coke is moved by rail to the quench tower, where several thousand gallons of water are used to cool the coke. The coke is allowed to dry and is separated into various sizes for future use. See Figure 7.5-1 of this document for a flow diagram of an integrated iron and steel plant which contains the coking operations.

7.2.2 Emissions[1]

Particulates, volatile organic compounds, carbon monoxide and other emissions originate from the following byproduct coking operations: (1) coal preheating (if used), (2) charging of coal into the incandescent ovens, (3) oven leakage during the coking period, (4) pushing the coke out of the ovens, (5) quenching the hot coke and (6) combustion stacks. Gaseous emissions from the byproduct ovens during the coking process are drawn off to a collecting main and are subjected to various operations for separating ammonia, coke oven gas, tar, phenol, light oil (benzene, toluene, xylene) and pyridine. These unit operations are potential sources of volatile organic compounds.

Oven charging operations and leakage around poorly sealed coke oven doors and lids are major sources of emissions from byproduct ovens. Emissions also occur when finished coke is pushed into the quench cars and during the quenching operation. The combustion process is also a source of pollutant emissions. As the combusting gases pass through the coke oven heating flues, emissions from the ovens may leak into the stream. Also, if the coke oven gas is not desulfurized, the combustion process will emit sulfur dioxide. Figure 7.2-1 is a depiction of a coke oven battery showing the major air pollution sources.

TYPES OF AIR POLLUTION EMISSIONS FROM COKE-OVEN BATTERIES

1. Pushing emissions
2. Charging emissions
3. Door emissions
4. Topside emissions
5. Battery underfire emissions

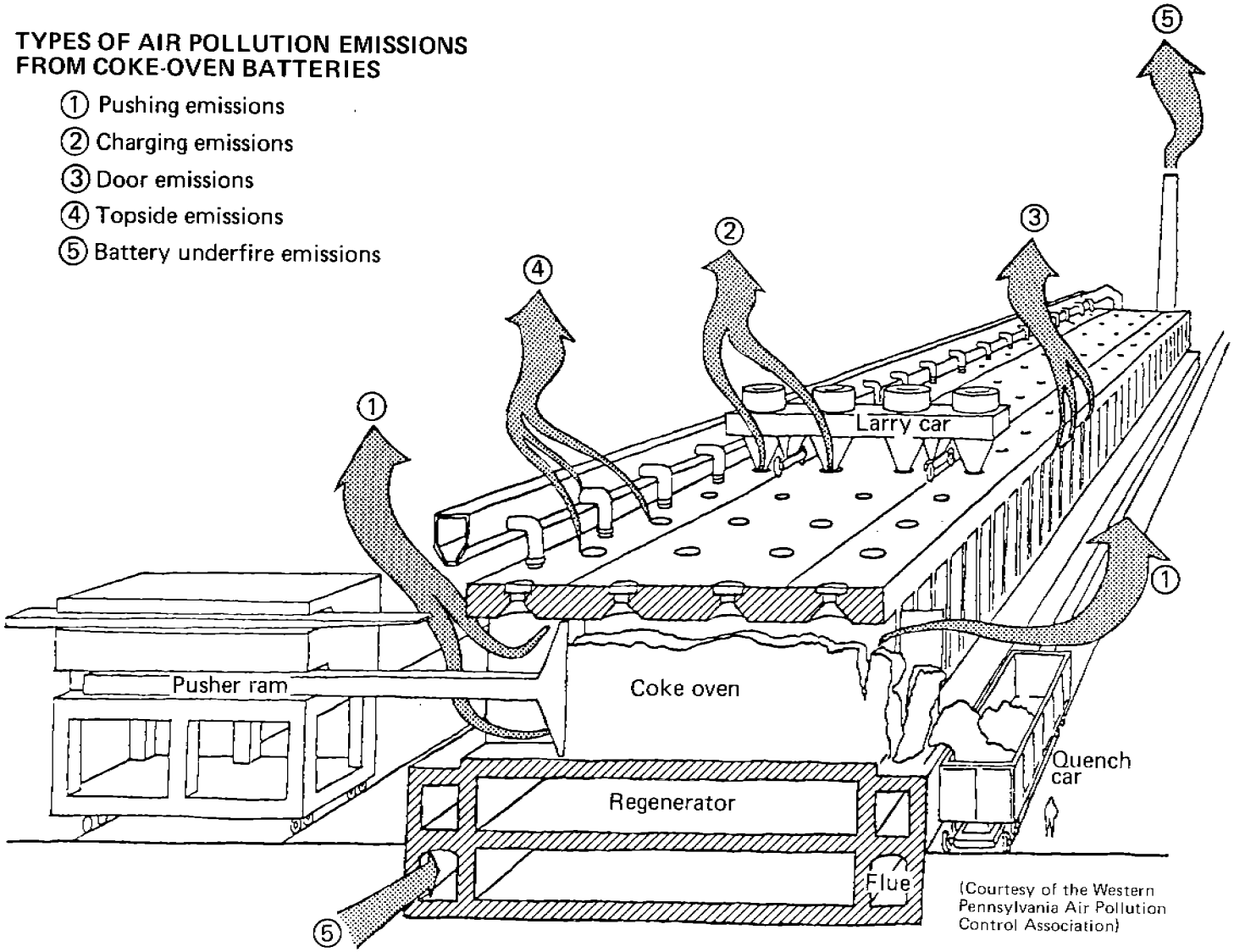

(Courtesy of the Western Pennsylvania Air Pollution Control Association)

TABLE 7.2-1. EMISSION FACTORS FOR COKE MANUFACTURE[a]

EMISSION FACTOR RATING: D (except particulates)

Type of operation	Particulates[b] kg/Mg	Particulates[b] lb/ton	Particulate emission factor rating	Sulfur dioxide[c] kg/Mg	Sulfur dioxide[c] lb/ton	Carbon monoxide[c] kg/Mg	Carbon monoxide[c] lb/ton	Volatile organics[c,d] kg/Mg	Volatile organics[c,d] lb/ton	Nitrogen oxides (NO_2)[c] kg/Mg	Nitrogen oxides (NO_2)[c] lb/ton	Ammonia[c] kg/Mg	Ammonia[c] lb/ton	Lead[e] kg/Mg	Lead[e] lb/ton
Coal Preheaters															
Uncontrolled	3.5	7.0	C	-	-	-	-	-	-	-	-	-	-	-	-
Controlled by scrubber	0.325	0.65	C	-	-	-	-	-	-	-	-	-	-	-	-
Coal Charging															
Uncontrolled	0.425	0.85	C	0.01	0.02	0.3	0.6	1.25	2.5	0.015	0.03	0.01	0.02	-	-
Controlled larry car vented to scrubber	0.01	0.02	C	-	-	-	-	-	-	-	-	-	-	-	-
Sequential charging	0.008	0.016	C	-	-	-	-	-	-	-	-	-	-	-	-
Door Leaks (Uncontrolled)	0.255	0.51	B	-	-	0.3	0.6	0.75	1.5	0.005	0.01	0.03	0.06	-	-
Coke Pushing															
Suspended particulates															
Uncontrolled (measured in duct venting coke side shed)	0.235	0.47	A	-	-	-	-	-	-	-	-	-	-	-	-
Controlled (water sprays)	0.195	0.39	A	-	-	-	-	-	-	-	-	-	-	-	-
Total particulates (suspended plus dust fall)															
Uncontrolled	1.0	2.0	B	-	-	0.035	0.07	0.1	0.2	-	-	0.05	0.1	-	-
Controlled (water sprays)	0.6	1.2	B	-	-	-	-	-	-	-	-	-	-	-	-
Controlled (enclosed coke car and guide vented to scrubber)	0.012	0.024	C	-	-	-	-	-	-	-	-	-	-	-	-
Quenching (Controlled by baffles)	0.5	1.0	A	-	-	-	-	-	-	-	-	-	-	-	-
Combustion Stacks (uncontrolled)	0.29	0.58	B	2.0[f]	4.0[f]	-	-	-	-	-	-	-	-	-	-
Combined Operations (uncontrolled)	-	-	-	-	-	-	-	-	-	-	-	-	-	0.00018	0.00035

[a]Emission factors expressed as weight per unit weight of coal charged. Dash indicates no available data.
[b]Reference 1.
[c]References 2-3.
[d]Expressed as methane.
[e]References 4-6.
[f]Reference 7. The sulfur dioxide factor is based on the following representative conditions: (1) sulfur content of coal charged to oven is 0.8 weight%; (2) about 33 weight % of total sulfur in the coal charged to oven is transferred to the coke oven gas; (3) about 40% of coke oven gas is burned during the underfiring operation, and the remainder is used in other parts of the steel operation, where the rest of the sulfur dioxide is discharged - about 3 kg/Mg (6 lb/ton) of coal charged; and (4) gas used in underfiring has not been desulfurized.

Associated with the byproduct coke oven process are open source fugitive dust operations. These include material handling operations of unloading, storing, grinding and sizing of coal, and the screening, crushing, storing and loading of coke. Fugitive emissions also come from vehicles traveling on paved and unpaved surfaces. These emissions and the parameters that influence them are discussed in more detail in Section 7.5 and Chapter 11 of this document. The emission factors for coking operations are summarized in Table 7.2-1. Extensive information on the data used to develop the particulate emission factors is found in Reference 1.

References for Section 7.2

1. Particulate Emission Factors Applicable to the Iron and Steel Industry, EPA-450/4-79-028, U.S. Environmental Protection Agency, Research Triangle Park, NC, September 1979.

2. Air Pollution by Coking Plants, United Nations Report: Economic Commission for Europe, ST/ECE/Coal/26, 1968.

3. R. W. Fullerton, "Impingement Baffles To Reduce Emissions from Coke Quenching", Journal of the Air Pollution Control Association, 17:807-809, December 1967.

4. R. B. Jacko, et al., By-product Coke Oven Pushing Operation: Total and Trace Metal Particulate Emissions, Purdue University, West Lafayette, IN, June 27, 1976.

5. Control Techniques for Lead Air Emissions, EPA-450/2-770-012, U.S. Environmental Protection Agency, Research Triangle Park, NC, December 1977.

6. Mineral Industry Surveys: Weekly Coal Report No. 3056, Bureau of Mines, U.S. Department of the Interior, Washington, DC, undated.

7. J. Varga and H. W. Lownie, Jr., Final Technological Report on: A Systems Analysis Study of the Integrated Iron and Steel Industry, HEW Contract No. PH 22-68-65, Battelle Memorial Institute, Columbus, OH, May 1969.

7.3 PRIMARY COPPER SMELTING

7.3.1 Process Description[1-3]

In the United States, copper is produced from sulfide ore concentrates principally by pyrometallurgical smelting methods. Because the copper ores usually contain less than 1 percent copper, they must be concentrated before transport to a smelter. Concentrations of 15 to 35 percent copper are accomplished at the mine site by crushing, grinding and flotation. Sulfur content of the concentrate ranges from 25 to 35 percent, and most of the remainder is iron (25 percent) and water (10 percent). Some concentrates also contain significant quantities of arsenic, cadmium, lead, antimony and other heavy metals.

The conventional pyrometallurgical copper smelting process is illustrated in Figure 7.3-1. The process includes roasting of ore concentrates to produce calcine, smelting of roasted (calcine feed) or unroasted (green feed) ore concentrates to produce matte, and converting of the matte to yield blister copper product (about 99 percent pure). Typically, the blister copper is fire refined in an anode furnace, cast into "anodes" and sent to an electrolytic refinery for further impurity elimination.

In roasting, charge material of copper concentrate mixed with a siliceous flux (often a low grade ore) is heated in air to about 650°C (1,200°F), eliminating 20 to 50 percent of the sulfur as sulfur dioxide (SO_2). Portions of such impurities as antimony, arsenic and lead are driven off, and some of the iron is converted to oxide. The roasted product, called calcine, serves as a dried and heated charge for the smelting furnace. Either multiple hearth or fluidized bed roasters are used for roasting copper concentrate. The fluid bed roaster is similar in appearance to a multihearth roaster but has fewer intricate internal mechanical systems. Multihearth roasters accept moist concentrate, whereas fluid bed roasters are fed finely ground material (60 percent minus 200 mesh). With both of these types, the roasting is autogenous. Because there is less air dilution, higher SO_2 concentrations are present in fluidized bed roaster gases than in multiple hearth roaster gases.

In the smelting process, either hot calcines from the roaster or raw unroasted concentrate are melted with siliceous flux in a smelting furnace to produce copper matte, a molten mixture of cuprous sulfide (Cu_2S) and ferrous sulfide (FeS) and some heavy metals. The required heat comes from partial oxidation of the sulfide charge and from burning external fuel. Most of the iron and some of the impurities in the charge oxidize and combine with the fluxes to form a slag on top of the molten bath, which is periodically removed and discarded. Copper matte remains in the furnace until tapped. Mattes produced by the domestic industry range from 35 to 65 percent copper, with about 45 percent the most common. This copper content percentage is referred to as the matte grade. Currently, four smelting furnace technologies are used in the U.S., reverberatory, electric, Noranda and Outokumpu (flash).

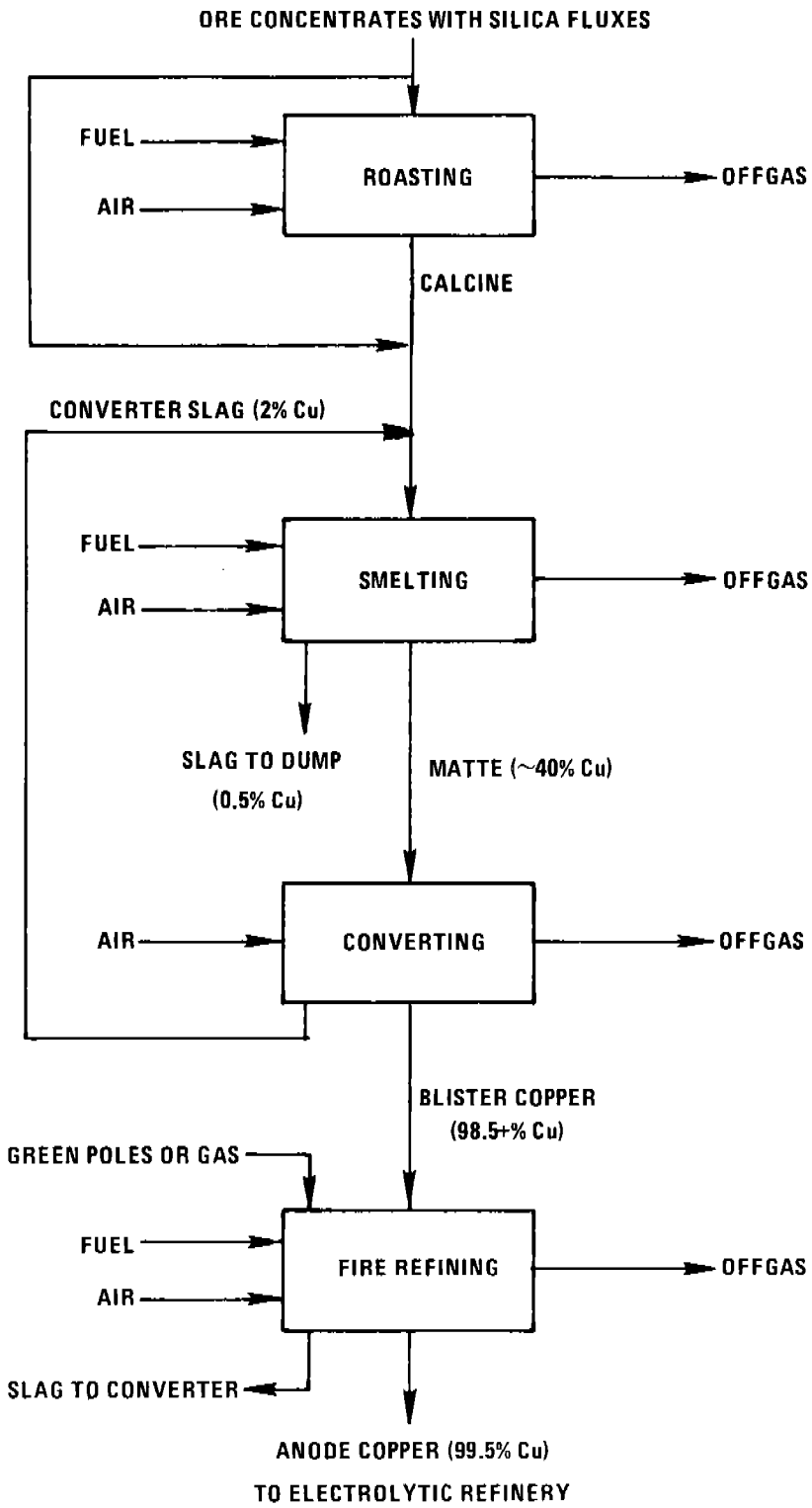

Figure 7.3-1. A conventional copper smelting process.

Reverberatory furnace operation is a continuous process, with frequent charging of input materials and periodic tapping of matte and skimming of slag. Reverberatory furnaces typically process from 800 to 1,200 Mg (900 to 1,300 tons) of charge per day. Heat is supplied by combustion of oil, gas or pulverized coal. Furnace temperatures may exceed 1,500°C (2,730°F).

For smelting in electric arc furnaces, heat is generated by the flow of an electric current in submerged carbon electrodes lowered through the furnace roof into the slag layer of the molten bath. The feed generally consists of dried concentrates or calcines, and charging wet concentrates is avoided. The chemical and physical changes occurring in the molten bath are similar to those occurring in the molten bath of a reverberatory furnace. Also, the matte and slag tapping practices are similar at both furnaces. Electric furnaces do not produce fuel combustion gases, so flow rates are lower and SO_2 concentrations higher in effluent gas than in that of reverberatory furnaces.

Flash furnace smelting combines the operations of roasting and smelting to produce a high grade copper matte from concentrates and flux. In flash smelting, dried ore concentrates and finely ground fluxes are injected together with oxygen, preheated air, or a mixture of both into a furnace of special design, where temperature is maintained at approximately 1,000°C (1,830°F). Flash furnaces, in contrast to reverberatory and electric furnaces, use the heat generated from partial oxidation of their sulfide sulfur charge to provide much or all of the energy (heat) required for smelting. They also produce offgas streams containing high concentrations of SO_2.

Slag produced by flash furnace operations contains significantly higher amounts of copper than does that from reverberatory or electric furnace operations. As a result, the flash furnace and converter slags produced at flash smelters are treated in a slag cleaning furnace to recover the copper. Slag cleaning furnaces usually are small electric arc furnaces. The flash furnace and converter slags are charged to a slag cleaning furnace and are allowed to settle under reducing conditions with the addition of coke or iron sulfide. The copper, which is in oxide form in the slag, is converted to copper sulfide, subsequently removed from the furnace and charged to a converter with the regular matte.

The Noranda process, as originally designed, allowed the continuous production of blister copper in a single vessel, by effectively combining roasting, smelting and converting into one operation. Metallurgical problems, however, led to the operation of these reactors for the production of copper matte. As in flash smelting, the Noranda process takes advantage of the heat energy available from the copper ore. The remaining thermal energy required is supplied by oil burners or by coal mixed with the ore concentrates.

The final step in the production of blister copper is converting. The purpose of converting is to eliminate the remaining iron and sulfur present in the matte, leaving molten "blister" copper. All but one U. S. smelter use Pierce-Smith converters, which are refractory lined cylindrical steel shells mounted on trunnions at either end and rotated about the major axis for charging and pouring. An opening in the center of the converter functions as

a mouth, through which molten matte, siliceous flux and scrap copper are charged and gaseous products are vented. Air or oxygen rich air is blown through the molten matte. Iron sulfide (FeS) is oxidized to iron oxide (FeO) and SO_2, and the FeO combines with the flux to form a slag on the surface. At the end of this segment of the converter operation, termed the slag blow, the slag is skimmed and generally recycled back to the smelting furnace. The process of charging, blowing and slag skimming is repeated until an adequate amount of relatively pure Cu_2S, called "white metal", accumulates in the bottom of the converter. A renewed air blast oxidizes the remaining copper sulfide sulfur to SO_2, leaving blister copper in the converter. The blister copper is subsequently removed and transferred to refining facilities. This segment of converter operation is termed the finish blow. The SO_2 produced throughout the operation is vented to pollution control devices.

One smelter uses Hoboken converters, the primary advantage of which lies in emission control. The Hoboken converter is essentially like a conventional Pierce-Smith converter, except that this vessel is fitted with a side flue at one end shaped as an inverted U. This flue arrangement permits siphoning of gases from the interior of the converter directly to offgas collection, leaving the converter mouth under a slight vacuum.

Blister copper usually contains from 98.5 to 99.5 percent pure copper. Impurities may include gold, silver, antimony, arsenic, bismuth, iron, lead, nickel, selenium, sulfur, tellurium and zinc. To purify blister copper further, fire refining and electrolytic refining are used. In fire refining, blister copper is placed in a fire refining furnace, a flux is usually added, and air is blown through the molten mixture to oxidize remaining impurities, which are removed as a slag. The remaining metal bath is subjected to a reducing atmosphere to reconvert cuprous oxide to copper. Temperature in the furnace is around 1,100°C (2,010°F). The fire refined copper is cast into anodes and further refined electrolytically. Electrolytic refining separates copper from impurities by electrolysis in a solution containing copper sulfate and sulfuric acid. Metallic impurities precipitate from the solution and form a sludge that is removed and treated to recover precious metals. Copper is dissolved from the anode and deposited at the cathode. Cathode copper is remelted and made into bars, ingots or slabs for marketing purpose. The copper produced is 99.95 to 99.97 percent pure.

7.3.2 Emissions and Controls

Particulate matter and sulfur dioxide are the principal air contaminants emitted by primary copper smelters. These emissions are generated directly from the processes involved, as in the liberation of SO_2 from copper concentrate during roasting or in the volatilization of trace elements as oxide fumes. Fugitive emissions are generated by leaks from major equipment during material handling operations.

Roasters, smelting furnaces and converters are sources of both particulate matter and sulfur oxides. Copper and iron oxides are the primary constituents of the particulate matter, but other oxides such as arsenic, antimony, cadmium, lead, mercury and zinc may also be present, with metallic sulfates and sulfuric

acid mist. Fuel combustion products also contribute to particulate emissions from multihearth roasters and reverberatory furnaces.

Single stage electrostatic precipitators (ESP) are widely used in the primary copper industry for the control of particulate emissions from roasters, smelting furnaces and converters. Many of the existing ESPs are operated at elevated temperatures, usually at 200 to 340°C (400 to 650°F) and are termed "hot ESPs". If properly designed and operated, these ESPs remove 99 percent or more of the condensed particulate matter present in gaseous effluents. However, at these elevated temperatures, a significant amount of volatile emissions such as arsenic trioxide (As_2O_3) and sulfuric acid mist is present as vapor in the gaseous effluent and thus can not be collected by the particulate control device at elevated temperatures. At these temperatures, the arsenic trioxide in the vapor state will pass through an ESP. Therefore, the gas stream to be treated must be cooled sufficiently to ensure that most of the arsenic present is condensed before entering the control device for collection. At some smelters, the gas effluents are cooled to about 120°C (250°F) temperature before entering a particulate control system, usually an ESP (termed "cold ESP"). Spray chambers or air infiltration are used for gas cooling. Fabric filters can also be used for particulate matter collection.

Gas effluents from roasters are usually sent to an ESP or spray chamber/ESP system or are combined with smelter furnace gas effluents before particulate collection. Overall, the hot ESPs remove only 20 to 80 percent of the total particulate (condensed and vapor) present in the gas. The cold ESPs may remove more than 95 percent of the total particulate present in the gas. Particulate collection systems for smelting furnaces are similar to those for roasters. Reverberatory furnace offgases are usually routed through waste heat boilers and low velocity balloon flues to recover large particles and heat, then are routed through an ESP or spray chamber/ESP system.

In the standard Pierce-Smith converter, flue gases are captured during the blowing phase by the primary hood over the converter mouth. To prevent the hood's binding to the converter with splashing molten metal, there is a gap between the hood and the vessel. During charging and pouring operations, significant fugitives may be emitted when the hood is removed to allow crane access. Converter offgases are treated in ESPs to remove particulate matter and in sulfuric acid plants to remove SO_2.

Remaining smelter processes handle material that contains very little sulfur, hence SO_2 emissions from these processes are insignificant. Particulate emissions from fire refining operations, however, may be of concern. Electrolytic refining does not produce emissions unless the associated sulfuric acid tanks are open to the atmosphere. Crushing and grinding systems used in ore, flux and slag processing also contribute to fugitive dust problems.

Control of SO_2 emissions from smelter sources is most commonly performed in a single or double contact sulfuric acid plant. Use of a sulfuric acid plant to treat copper smelter effluent gas streams requires that gas be free from particulate matter and that a certain minimum inlet SO_2 concentration be maintained. Practical limitations have usually restricted sulfuric acid plant application to gas streams that contain at least 3.0 percent SO_2. Table 7.3-1 shows typical average SO_2 concentrations for the various smelter unit offgases.

TABLE 7.3-1. TYPICAL SULFUR DIOXIDE CONCENTRATIONS IN OFFGASES FROM PRIMARY COPPER SMELTING SOURCES

Unit	SO_2 concentration Volume %
Multiple hearth roaster	1.5 - 3
Fluidized bed roaster	10 - 12
Reverberatory furnace	0.5 - 1.5
Electric arc furnace	4 - 8
Flash smelting furnace	10 - 20
Continuous smelting furnace	5 - 15
Pierce-Smith converter	4 - 7
Hoboken converter	8
Single contact H_2SO_4 plant	0.2 - 0.26
Double contact H_2SO_4 plant	0.05

Currently, converter gas effluents at most of the smelters are treated for SO_2 control in sulfuric acid plants. Gas effluents from some multihearth roaster operations and all fluid bed roaster operations are also treated in sulfuric acid plants. The weak SO_2 content gas effluents from the reverberatory furnace operations are usually released to the atmosphere with no reduction of SO_2. The gas effluents from the other types of smelter furnaces, due to their higher contents of SO_2, are treated in sulfuric acid plants before being vented. Typically, single contact acid plants achieve 92.5 to 98 percent conversion of SO_2 to acid, with approximately 2000 ppm SO_2 remaining in the acid plant effluent gas. Double contact acid plants collect from 98 to more than 99 percent of the SO_2 and emit about 500 ppm SO_2. Absorption of the SO_2 in dimethylaniline (DMA) solution has also been used in U. S. smelters to produce liquid SO_2.

Emissions from hydrometallurgical smelting plants generally are small in quantity and are easily controlled. In the Arbiter process, ammonia gas escapes from the leach reactors, mixer/settlers, thickeners and tanks. For control, all of these units are covered and vented to a packed tower scrubber to recover and recycle the ammonia.

Actual emissions from a particular smelter unit depend upon the configuration of equipment in that smelting plant and its operating parameters. Table 7.3-2 gives emission factors for the major units for various smelter configurations.

7.3.3 Fugitive Emissions

The process sources of particulate matter and SO_2 emissions are also the potential fugitive sources of these emissions, roasting, smelting, converting, fire refining and slag cleaning. Table 7.3-3 presents the potential fugitive emission factors for these sources. The actual quantities of emissions from these sources depend on the type and condition of the equipment and on the smelter operating techniques. Although emissions from many of these sources are released inside a building, ultimately they are discharged to the atmosphere.

Fugitive emissions are generated during the discharge and transfer of hot calcine from multihearth roasters, and negligible amounts of fugitive emissions

TABLE 7.3-2. EMISSION FACTORS FOR PRIMARY COPPER SMELTERS[a,b]

EMISSION FACTOR RATING: B

Configuration[c]	Unit	Particulate matter		SO_2[d]		References
		Kg/Mg	lb/ton	Kg/Mg	lb/ton	
Reverberatory furnace (RF) followed by converters (C)	RF	25	50	160	320	4-10,
	C	18	36	370	740	9, 11-15
Multihearth roaster (MHR) followed by reverberatory furnace (RF) and converters (C)	MHR	22	45	140	280	4-5, 16-17
	RF	25	50	90	180	4-9, 18-19
	C	18	36	300	600	8, 11-13
Fluid bed roaster (FBR) followed by reverberatory furnace (RF) and converters (C)	FBR	NA	NA	180	360	20
	RF	25	50	90	160	e
	C	18	36	270	540	e
Concentrate dryer (CD) followed by electric furnace (EF) and converters (C)	CD	5	10	0.5	1	21-22
	EF	50	100	120	240	15
	C	18	36	410	820	8, 11-13, 15
Fluid bed roaster (FBR) followed by electric furnace (EF) and converters (C)	FBR	NA	NA	180	360	20
	EF	50	100	45	90	15, 23
	C	18	36	300	600	e
Concentrate dryer (CD) followed by flash furnace (FF), cleaning furnace (SS) and converters (C)	CD	5	10	0.5	1	21-22
	FF	70	140	410	820	24
	SS[f]	5	10	0.5	1	22
	C[e]	NA[g]	NA[g]	120	240	22
Concentrate dryer (CD) followed by Noranda reactors (NR) and converters (C)	CD	5	10	0.5	1	21-22
	NR	NA	NA	NA	NA	
	C	NA	NA	NA	NA	

[a]Expressed as units per unit weight of concentrated ore processed by the smelter. Approximately 4 unit weights of concentrate are required to produce 1 unit weight of blister copper. NA = not available.

[b]For particulate matter removal, gaseous effluents from roasters, smelting furnaces and converters are usually treated in hot ESPs at 200 - 340°C (400 - 650°F) or in cold ESPs with gases cooled to about 120°C (250°F) before ESP. Particulate emissions from copper smelters contain volatile metallic oxides which remain in vapor form at higher temperatures and which condense to solid particulate at lower temperatures (120°C or 250°F). Therefore, overall particulate removal in hot ESPs may range from 20 - 80%, and overall particulate removal in cold ESPs may be 99%. Converter gas effluents and, at some smelters, roaster gas effluents are treated in single contact acid plants (SCAP) or double contact acid plants (DCAP) for SO_2 removal. Typical SCAPs are about 96% efficient, and DCAPs are up to 99.8 % efficient in SO_2 removal. They also remove over 99% of particulate matter.

[c]In addition to sources indicated, each smelter configuration contains fire refining anode furnaces after the converters. Anode furnaces emit negligible SO_2. No particulate emission data are available for anode furnaces.

[d]Factors for all configurations except reverberatory furnace followed by converters were developed by normalizing test data for several smelters to represent 30% sulfur content in concentrated ore.

[e]Based on the test data for the configuration multihearth roaster followed by reverberatory furnace and converters.

[f]Used to recover copper from furnace slag and converter slag.

[g]Since the converters at flash furnace and Noranda furnace smelters treat high copper content matte, converter particulate emissions from flash furnace smelters are expected to be lower than corresponding emissions from conventional smelters consisting of multihearth roasters, reverberatory furnace, and converters.

may also come from the charging of these roasters. Fluid bed roasting, a closed loop operation, has negligible fugitive emissions.

Matte tapping and slag skimming operations are sources of fugitive emissions from smelting furnaces. Fugitive emissions can also result from charging of a

TABLE 7.3-3. FUGITIVE EMISSION FACTORS FOR PRIMARY COPPER SMELTERS[a]

EMISSION FACTOR RATING: B

Source	Particulate matter		SO_2	
	Kg/Mg	lb/ton	Kg/Mg	lb/ton
Roaster calcine discharge	1.3	2.6	0.5	1
Smelting furnace[b]	0.2	0.4	2	4
Converters	2.2	4.4	65	130
Converter slag return	NA	NA	0.05	0.1
Anode furnace	0.25	0.5	0.05	0.1
Slag cleaning furnace[c]	4	8	3	6

[a]References 16, 22, 25-31. Expressed as mass units per unit weight of concentrated ore processed by the smelter. Approximately 4 unit weights of concentrate are required to produce 1 unit weight of copper metal. Factors for flash furnace smelters and Noranda furnace smelters may be slightly lower than reported values. NA = not available.
[b]Includes fugitive emissions from matte tapping and slag skimming operations. About 50% of fugitive particulate matter emissions and about 90% of total SO_2 emissions are from matte tapping operations. The remainder is from slag skimming.
[c]Used to treat slags from smelting furnaces and converters at the flash furnace smelter.

smelting furnace or from leaks, depending upon the furnace type and condition. A typical single matte tapping operation lasts from 5 to 10 minutes, and a single slag skimming operation lasts from 10 to 20 minutes. Tapping frequencies vary with furnace capacity and type. In an 8 hour shift, matte is tapped 5 to 20 times, and slag is skimmed 10 to 25 times.

Each of the various stages of converter operation, the charging, blowing, slag skimming, blister pouring, and holding, is a potential source of fugitive emissions. During blowing, the converter mouth is in stack (i. e., a close fitting primary hood is over the mouth to capture offgases). Fugitive emissions escape from the hoods. During charging, skimming and pouring operations, the converter mouth is out of stack (i. e., the converter mouth is rolled out of its vertical position, and the primary hood is isolated). Fugitive emissions are discharged during the rollout.

At times during normal smelting operations, slag or blister copper can not be transferred immediately from or to the converters. This condition, the holding stage, may occur for several reasons, including insufficient matte in the smelting furnace, the unavailability of a crane, and others. Under these conditions, the converter is rolled out of vertical position and remains in a holding position, and fugitive emissions may result.

Fugitive emissions from primary copper smelters are captured by applying either local or general ventilation techniques. Once captured, emissions may

be vented directly to a collection device or be combined with process offgases before collection. Close fitting exhaust hood capture systems are used for multihearth roasters, and hood ventilation systems for smelter matte tapping and slag skimming operations. For converters, secondary hood systems or building evacuation systems are used.

7.3.4 Lead Emission Factors

Both the process and the fugitive particulate matter emissions from various equipment at primary copper smelters contain oxides of many inorganic elements, including lead. The lead content of particulate matter emissions depends upon both the lead content of concentrate feed into the smelter and the process offgas temperature. Lead emissions are effectively removed in particulate control systems operating at low temperatures of about 120°C (250°F).

Table 7.3-4 presents lead emission factors for various operations of primary copper smelters. These emission factors represent totals of both process and fugitive emissions.

TABLE 7.3-4. LEAD EMISSION FACTORS FOR PRIMARY COPPER SMELTERS[a]

EMISSION FACTOR RATING: C

Operation	Lead emissions[b]	
	kg/Mg	lb/ton
Roasting[c]	0.075	0.15
Smelting[d]	0.036	0.072
Converting[e]	0.13	0.27
Refining	NA	NA

[a]Reference 32. Expressed as units per unit weight of concentrated ore processed by the smelter. Approximately 4 unit weights of concentrate are required to produce 1 unit weight of copper metal. Based on test data for several smelters containing from 0.1 to 0.4% lead in feed throughput. NA = not available.
[b]For process and fugitive emissions totals.
[c]Based on test data on multihearth roasters. Includes the total of process emissions and calcine transfer fugitive emissions. Calcine transfer fugitive emissions constitute about 10 percent of the total of process and fugitive emissions.
[d]Based on test data on reverberatory furnaces. Includes total process emissions and fugitive emissions from matte tapping and slag skimming operations. Fugitive emissions from matte tapping and slag skimming operations amount to about 35% and 2%, respectively.
[e]Includes the total of process and fugitive emissions. Fugitive emissions constitute about 50 percent of the total.

References for Section 7.3

1. Background Information for New Source Performance Standards: Primary Copper, Zinc, and Lead Smelters, Volume I, Proposed Standards, EPA-450/2-74-002a, U. S. Environmental Protection Agency, Research Triangle Park, NC, October 1974.

2. Arsenic Emissions from Primary Copper Smelters - Background Information for Proposed Standards, Preliminary Draft, EPA Contract No. 68-02-3060, Pacific Environmental Services, Durham, NC, February 1981.

3. Background Information Document for Revision of New Source Performance Standards for Primary Copper Smelters, Draft Chapters 3 through 6, EPA Contract Number 68-02-3056, Research Triangle Institute, Research Triangle Park, NC, March 31, 1982.

4. Air Pollution Emission Test: ASARCO Copper Smelter, El Paso, Texas, EMB-77-CUS-6, U. S. Environmental Protection Agency, Research Triangle Park, NC, June 1977.

5. Written communication from W. F. Cummins, ASARCO, Inc., El Paso, TX, to A. E. Vervaert, U. S. Environmental Protection Agency, Research Triangle Park, NC, August 31, 1977.

6. AP-42 Background Files, Office of Air Quality Planning and Standards, U. S. Environmental Protection Agency, Research Triangle Park, NC.

7. Source Emissions Survey of Kennecott Copper Corporation, Copper Smelter Converter Stack Inlet and Outlet and Reverberatory Electrostatic Precipitator Inlet and Outlet, Hurley, New Mexico, File Number EA-735-09, Ecology Audits, Inc., Dallas, TX, April 1973.

8. Trace Element Study at a Primary Copper Smelter, EPA-600/2-78-065a and -065b, U. S. Environmental Protection Agency, Research Triangle Park, NC, March 1978.

9. Systems Study for Control of Emissions, Primary Nonferrous Smelting Industry, Volume II: Appendices A and B, PB-184885, National Technical Information Service, Springfield, VA, June 1969.

10. Design and Operating Parameters For Emission Control Studies: White Pine Copper Smelter, EPA-600/2-76-036a, U. S. Environmental Protection Agency, Washington, DC, February 1976.

11. R. M. Statnick, Measurement of Sulfur Dioxide, Particulate and Trace Elements in Copper Smelter Converter and Roaster/Reverberatory Gas Streams, PB-238095, National Technical Information Service, Springfield, VA, October 1974.

12. AP-42 Background Files, Office of Air Quality Planning and Standards, U. S. Environmental Protection Agency, Research Triangle Park, NC.

13. Design and Operating Parameters For Emission Control Studies, Kennecott - McGill Copper Smelter, EPA-600/2-76-036c, U. S. Environmental Protection Agency, Washington, DC, February 1976.

14. Emission Test Report (Acid Plant) of Phelps Dodge Copper Smelter, Ajo, Arizona, EMB-78-CUS-11, U. S. Environmental Protection Agency, Research Triangle Park, NC, March 1979.

15. S. Dayton, "Inspiration's Design for Clean Air", Engineering and Mining Journal, 175:6, June 1974.

16. Emission Testing of ASARCO Copper Smelter, Tacoma, Washington, EMB 78-CUS-12, U. S. Environmental Protection Agency, Research Triangle Park, NC, April 1979.

17. Written communication from A. L. Labbe, ASARCO Inc., Tacoma, WA, to S. T. Cuffe, U. S. Environmental Protection Agency, Research Triangle Park, NC, November 20, 1978.

18. Design and Operating Parameters for Emission Control Studies: ASARCO - Hayden Copper Smelter, EPA-600/2-76-036j, U. S. Environmental Protection Agency, Washington, DC, February 1976.

19. Pacific Environmental Services, Incorporated, Design and Operating Parameters for Emission Control Studies: Kennecott, Hayden Copper Smelter, EPA-600/2-76-036b, U. S. Environmental Protection Agency, Washington, DC, February 1976.

20. R. Larkin, Arsenic Emissions at Kennecott Copper Corporation, Hayden, AZ, EPA-76-NFS-1, U. S. Environmental Protection Agency, Research Triangle Park, NC, May 1977.

21. Emission Compliance Status, Inspiration Consolidated Copper Company, Inspiration, AZ, U. S. Environmental Protection Agency, San Francisco, CA, 1980.

22. Written communication from M. P. Scanlon, Phelps Dodge Corporation, to D. R. Goodwin, U. S. Environmental Protection Agency, Research Triangle Park, NC, October 18, 1978.

23. Written communication from G. M. McArthur, The Anaconda Company, to D. R. Goodwin, U. S. Environmental Protection Agency, Research Triangle Park, NC, June 2, 1977.

24. Telephone communication from V. Katari, Pacific Environmental Services, Inc., Durham, NC, to R. Winslow, Hidalgo Smelter, Phelps Dodge Corporation, Hidalgo, AZ, April 1, 1982.

25. Emission Test Report, Phelps Dodge Copper Smelter, Douglas, Arizona, EMB-78-CUS-8, U. S. Environmental Protection Agency, Research Triangle Park, NC, February 1979.

26. Emission Testing of Kennecott Copper Smelter, Magna, Utah, EMB-78-CUS-13, U. S. Environmental Protection Agency, Research Triangle Park, NC, April 1979.

27. Emission Test Report, Phelps Dodge Copper Smelter, Ajo, Arizona, EMB-78-CUS-9, U. S. Environmental Protection Agency, Research Triangle Park, NC, February 1979.

28. Written communication from R. D. Putnam, ASARCO, Inc., to M. O. Varner, ASARCO, Inc., Salt Lake City, UT, May 12, 1980.

29. Emission Test Report, Phelps Dodge Copper Smelter, Playas, New Mexico, EMB-78-CUS-10, U. S. Environmental Protection Agency, Research Triangle Park, NC, March 1979.

30. ASARCO Copper Smelter, El Paso, Texas, EMB-78-CUS-7, U. S. Environmental Protection Agency, Research Triangle Park, NC, April 25, 1978.

31. A. D. Church, et al., "Measurement of Fugitive Particulate and Sulfur Dioxide Emissions at Inco's Copper Cliff Smelter", Paper A-79-51, The Metallurgical Society of American Institute of Mining, Metallurgical, and Petroleum Engineers (AIME), New York, NY.

32. Copper Smelters, Emission Test Report - Lead Emissions, EMB-79-CUS-14, U. S. Environmental Protection Agency, Research Triangle Park, NC, September 1979.

7.4 FERROALLOY PRODUCTION

7.4.1 Process Description[1,2]

Ferroalloy is the generic term for alloys consisting of iron and one or more other metals. Ferroalloys are used in steel production as alloying elements and deoxidants. There are three basic types of ferroalloys: (1) silicon-based alloys, including ferrosilicon and calciumsilicon; (2) manganese-based alloys, including ferromanganese and silicomanganese; and (3) chromium-based alloys, including ferrochromium and ferrosilicochrome.

The four major procedures used to produce ferroalloy and high-purity metallic additives for steelmaking are: (1) blast furnace, (2) electrolytic deposition, (3) alumina silico-thermic process, and (4) electric smelting furnace. Because over 75 percent of the ferroalloys are produced in electric smelting furnaces, this section deals only with that type of furnace.

The oldest, simplest, and most widely used electric furnaces are the submerged-arc open type, although semi-covered furnaces are also used. The alloys are made in the electric furnaces by reduction of suitable oxides. For example, in making ferrochromium the charge may consist of chrome ore, limestone, quartz (silica), coal and wood chips, along with scrap iron.

7.4.2 Emissions[3]

The production of ferroalloys has many dust- or fume-producing steps. The dust resulting from raw material handling, mix delivery, and crushing and sizing of the solidified product can be handled by conventional techniques and is ordinarily not a pollution problem. By far the major pollution problem arises from the ferroalloy furnaces themselves. The conventional submerged-arc furnace utilizes carbon reduction of metallic oxides and continuously produces large quantities of carbon monoxide. This escaping gas carries large quantities of particulates of submicron size, making control difficult.

In an open furnace, essentially all of the carbon monoxide burns with induced air at the top of the charge, and CO emissions are small. Particulate emissions from the open furnace, however, can be quite large. In the semi-closed furnace, most or all of the CO is withdrawn from the furnace and burns with dilution air introduced into the system. The unburned CO goes through particulate control devices and can be used as boiler fuel or can be flared directly. Particulate emission factors for electric smelting furnaces are presented in Table 7.4-1. No carbon monoxide emission data have been reported in the literature.

TABLE 7.4-1. EMISSION FACTORS FOR FERROALLOY PRODUCTION IN ELECTRIC SMELTING FURNACES[a]

EMISSION FACTOR RATING: C

Type of furnace and product	Particulates		Lead[b]	
	kg/Mg	lb/ton	kg/Mg	lb/ton
Open furnace				
50% FeSi[c]	100	200	0.15	0.29
75% FeSi[d]	157.5	315	0.0015	0.0031
90% FeSi[c]	282.5	565	-	-
Silicon metal[e]	312.5	625	0.0015	0.0031
Silicomanganese[f]	97.5	195	0.0029	0.0057
Ferrochrome-Silicon	-	-	0.04	0.08
High Carbon ferrochrome	-	-	0.17	0.34
Semi-covered furnace				
Ferromanganese[f]	22.5	45	0.06	0.11

[a]Emission factors expressed as weight per unit weight of specified product. Dash indicates no available data.
[b]References 1-5.
[c]Reference 8.
[d]References 10-11.
[e]References 9, 12.
[f]Reference 11.

REFERENCES FOR SECTION 7.4

1. R. A. Pearson, "Control of Emissions from Ferroalloy Furnace Processing", presented at the 27th Electric Furnace Conference, Detroit, MI, December 1969.

2. J. O. Dealy and A. M. Killin, Air Pollution Control Engineering and Cost Study of the Ferroalloy Industry, EPA-450/2-74-008, U.S. Environmental Protection Agency, Research Triangle Park, NC, May 1974.

3. A. E. Vandergrift, et al., Particulate Pollutant System Study - Mass Emissions, PB-203-128, PB-203-522 and PB-203-521, U.S. Environmental Protection Agency, Research Triangle Park, NC, May 1971.

4. Control Techniques for Lead Air Emissions, EPA-450/2-77-012, U.S. Environmental Protection Agency, Research Triangle Park, NC, December 1977.

5. W. E. Davis, Emissions Study of Industrial Sources of Lead Air Pollutants, 1970, EPA-APTD-1543, W. E. Davis and Associates, Leawood, KS, April 1973.

6. Air Pollutant Emission Factors, Final Report, Resources Research, Inc., Reston, VA, prepared for National Air Pollution Control Administration, Durham, NC, under Contract Number CPA-22-69-119, April 1970.

7. Ferroalloys: Steel's All-purpose Additives, The Magazine of Metals Producing, February 1967.

8. R. A. Person, Control of Emissions from Ferroalloy Furnace Processing, Niagara Falls, NY, 1969.

9. Unpublished stack test results, Resources Research, Incorporated, Reston, VA.

10. R. Ferrari, Experiences in Developing an Effective Pollution Control System for a Submerged-Arc Ferroalloy Furnace Operation, J. Metals, p. 95-104, April 1968.

11. Fredriksen and Nestaas, Pollution Problems by Electric Furnace Ferroalloy Production, United Nations Economic Commission for Europe, September 1968.

12. R. W. Gerstle and J. L. McGinnity, Plant Visit Memorandum, U.S. DHEW, PHS, National Center for Air Pollution Control, Cincinnati, OH, June 1967.

7.5 IRON AND STEEL PRODUCTION

7.5.1 Process Description and Emissions[1-2]

Iron and steel manufacturing may be grouped into eight generic process operations: 1) coke production, 2) sinter production, 3) iron production, 4) steel production, 5) semifinished product preparation, 6) finished product preparation, 7) heat and electricity supply and 8) handling and transport of raw, intermediate and waste materials. Figure 7.5-1, a general flow diagram of the iron and steel industry, interrelates these categories. Coke production is discussed in detail in Section 7.2 of this publication, and more information on the handling and transport of materials is found in Chapter 11.

Sinter Production - The sintering process converts fine raw materials like fine iron ore, coke breeze, fluxstone, mill scale and flue dust into an agglomerated product of suitable size for charging into a blast furnace. The materials are mixed with water to provide cohesion in a mixing mill and are placed on a continuous moving grate called the sinter strand. A burner hood above the front third of the sinter strand ignites the coke in the mixture. Once ignited, combustion is self supporting and provides sufficient heat, 1300 to 1480°C (2400 to 2700°F), to cause surface melting and agglomeration of the mix. On the underside of the sinter machine lie windboxes that draw the combusted air through the material bed into a common duct to a particulate control device. The fused sinter is discharged at the end of the sinter machine, where it is crushed and screened, and any undersize portion is recycled to the mixing mill. The remaining sinter is cooled in open air by water spray or by mechanical fan to draw off the heat from the sinter. The cooled sinter is screened a final time, with the fines being recycled and the rest being sent to charge the blast furnaces.

Emissions occur at several points in the sintering process. Points of particulate generation are the windbox, the discharge (sinter crusher and hot screen), the cooler and the cold screen. In addition, inplant transfer stations generate emissions which can be controlled by local enclosures. All the above sources except the cooler normally are vented to one or two control systems.

Iron Production - Iron is produced in blast furnaces, which are large refractory lined chambers into which iron (as natural ore or as agglomerated products such as pellets or sinter, coke and limestone) is charged and allowed to react with large amounts of hot air to produce molten iron. Slag and blast furnace gases are byproducts of this operation. The average charge to produce one unit weight of iron requires 1.7 unit weights of iron bearing charge, 0.55 unit weights of coke, 0.2 unit weights of limestone, and 1.9 unit weights of air. Average blast furnace byproducts consist of 0.3 unit weights of slag, 0.05 unit weights of flue dust, and 3.0 unit weights of gas per unit of iron produced. The flue dust and other iron ore fines from the process are converted into useful blast furnace charge by the sintering operation.

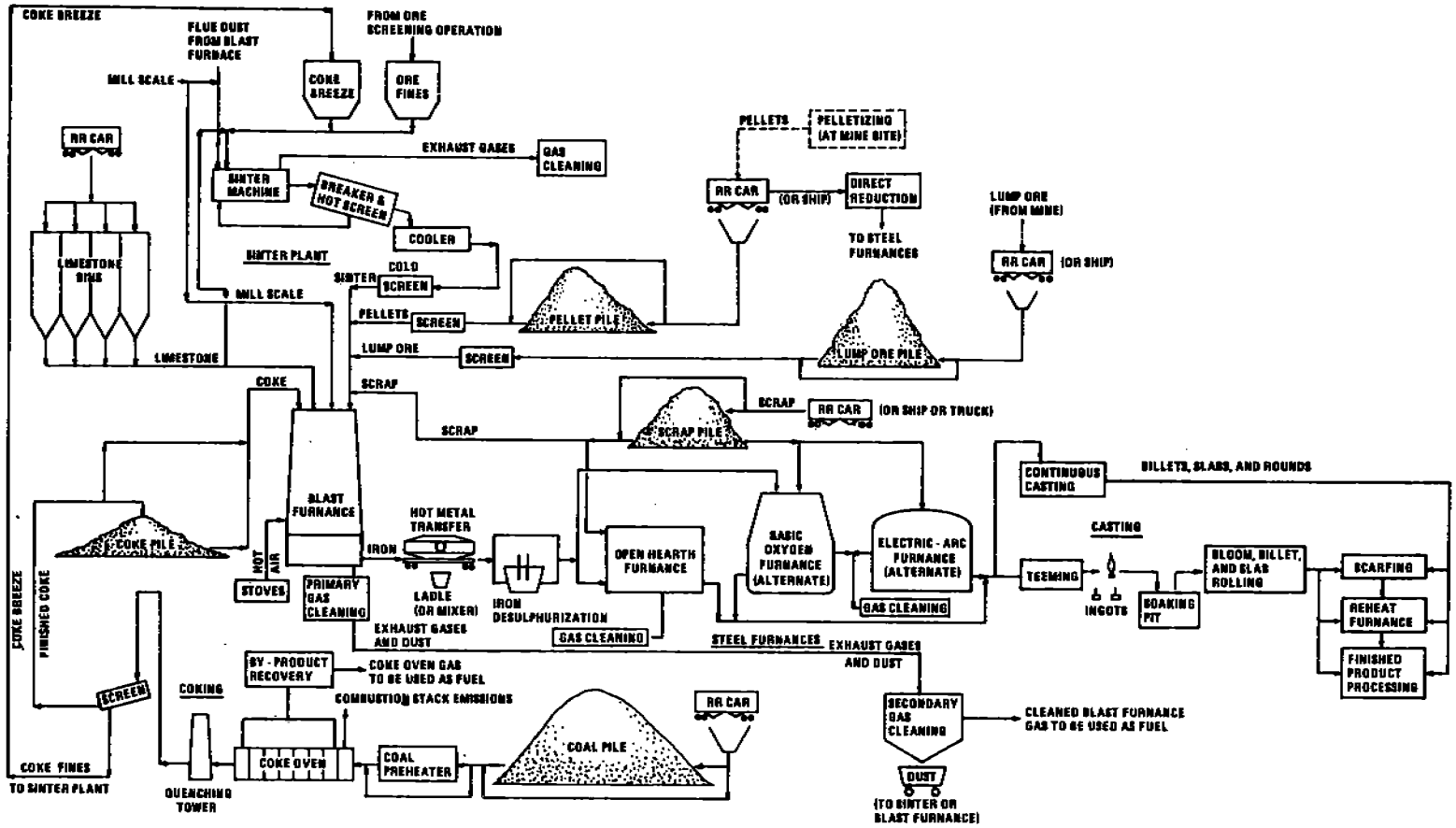

Figure 7.5-1. General flow diagram for the iron and steel industry.

Because of its high carbon monoxide content, this blast furnace gas has a low heating value, about 2790 to 3350 joules per cubic liter (75 to 90 BTU/ft^3) and is used as a fuel within the steel plant. Before it can be efficiently oxidized, however, the gas must be cleaned of particulate. Initially, the gases pass through a settling chamber or dry cyclone to remove about 60 percent of the particulate. Next, the gases undergo a one or two stage cleaning operation. The primary cleaner is normally a wet scrubber, which removes about 90 percent of the remaining particulate. The secondary cleaner is a high energy wet scrubber (usually a venturi) or an electrostatic precipitator, either of which can remove up to 90 percent of the particulate that eludes the primary cleaner. Together these control devices provide a clean fuel of less than 0.05 grams per cubic meter (0.02 gr/ft^3) for use in the steel plant.

Emissions occur during the production of iron when there is a blast furnace "slip" and during hot metal transfer operations in the cast house. All gas generated in the blast furnace is normally cleaned and used for fuel. Conditions such as "slips", however, can cause instant emissions of carbon monoxide and particulates. Slips occur when a stratum of the material charged to a blast furnace does not settle with the material below it, thus leaving a gas filled space between the two portions of the charge. When this unsettled stratum of charge collapses, the displaced gas may cause the top gas pressure to increase above the safety limit, thus opening a counter weighted bleeder valve to the atmosphere.

Steel Production (Basic Oxygen Furnace) - The basic oxygen process is used to produce steel from a furnace charge typically composed of 70 percent molten blast furnace metal and 30 percent scrap metal by use of a stream of commercially pure oxygen to oxidize the impurities, principally carbon and silicon. Most of the basic oxygen furnaces (BOF) in the United States have oxygen blown through a lance in the top of the furnace. However, the Quelle Basic Oxygen Process (QBOP), which is growing in use, has oxygen blown through tuyeres in the bottom of the furnace. Cycle times for the basic oxygen process range from 25 to 45 minutes.

The large quantities of carbon monoxide (CO) produced by the reactions in the BOF can be combusted at the mouth of the furnace and then vented to gas cleaning devices, as with open hoods, or the combustion can be suppressed at the furnace mouth, as with closed hoods. The term "closed hood" is actually a misnomer, since the opening at the furnace mouth is large enough to allow approximately 10 percent of theoretical air to enter. Although most furnaces installed before 1975 are of the open hood design, nearly all the QBOPs in the United States have closed hoods, and most of the new top blown furnaces are being designed with closed hoods.

There are several sources of emissions in the basic oxygen furnace steel making process, 1) the furnace mouth during refining - with collection by local full (open) or suppressed (closed) combustion hoods, 2) hot metal transfer to charging ladle, 3) charging scrap and hot metal, 4) dumping slag and 5) tapping steel.

Steel Production (Electric Arc Furnaces) - Electric arc furnaces (EAF) are used to produce carbon and alloy steels. The charge to an EAF is nearly

always 100 percent scrap. Direct arc electrodes through the roof of the furnace melt the scrap. An oxygen lance may or may not be used to speed the melting and refining process. Cycles range from 1-1/2 to 5 hours for carbon steel and from 5 to 10 hours for alloy steel.

Sources of emissions in the electric arc furnace steel making process are 1) emissions from melting and refining, often vented through a hole in the furnace roof, 2) charging scrap, 3) dumping slag and 4) tapping steel. In interpreting and using emission factors for EAFs, it is important to know what configuration one is dealing with. For example, if an EAF has a building evacuation system, the emission factor before the control device would represent all melting, refining, charging, tapping and slagging emissions which ascend to the building roof. Reference 2 has more details on various configurations used to control electric arc furnaces.

Steel Production (Open Hearth Furnaces) - In the open hearth furnace (OHF), a mixture of iron and steel scrap and hot metal (molten iron) is melted in a shallow rectangular basin or "hearth". Burners producing a flame above the charge provide the heat necessary for melting. The mixture of scrap and hot metal can vary from all scrap to all hot metal, but a half and half mixture is a reasonable industry average. The process may or may not be oxygen lanced, with process cycle times approximately 8 hours and 10 hours, respectively.

Sources of emissions in the open hearth furnace steel making process are 1) transferring hot metal, 2) melting and refining the heat, 3) charging of scrap and/or hot metal, 4) dumping slag and 5) tapping steel.

Semifinished Product Preparation - After the steel has been tapped, the molten metal is teemed into ingots which are later heated to form blooms, billets or slabs. (In a continuous casting operation, the molten metal may bypass this entire process.) The product next goes through a process of surface preparation of semifinished steel (scarfing). A scarfing machine removes surface defects before shaping or rolling of the steel billets, blooms and slabs by applying jets of oxygen to the surface of the steel, which is at orange heat, thus removing a thin layer of the metal by rapid oxidation. Scarfing can be performed by machine on hot semifinished steel or by hand on cold or slightly heated semifinished steel. Emissions occur during teeming as the molten metal is poured, and when the semifinished steel products are manually or machine scarfed to remove surface defects.

Miscellaneous Combustion Sources - Iron and steel plants require energy (heat or electricity) for every plant operation. Some energy operations on plant property that produce emissions are boilers, soaking pits and slab furnaces which burn coal, No. 2 fuel oil, natural gas, coke oven gas or blast furnace gas. In soaking pits, ingots are heated until the temperature distribution over the cross section of the ingots is acceptable and the surface temperature is uniform for further rolling into semifinished products (blooms, billets and slabs). In slab furnaces, a slab is heated before being rolled into finished products (plates, sheets or strips). The emissions from the combustion of natural gas, fuel oil or coal for boilers

can be found in Chapter 1 of this document. Estimated emissions from these same fuels used in soaking pits or slab furnaces can be the same as those for boilers, but since it is estimation, the factor rating drops to D.

Emission factor data for blast furnace gas and coke oven gas are not available and must be estimated. There are three facts available for making the estimation. First, the gas exiting the blast furnace passes through primary and secondary cleaners and can be cleaned to less than 0.05 grams per cubic meter (0.02 gr/ft^3). Second, nearly one third of the coke oven gas is methane. Third, there are no blast furnace gas constituents that generate particulate when burned. The combustible constituent of blast furnace gas is CO, which burns clean. Based on facts one and three, the emission factor for combustion of blast furnace gas is equal to the particulate loading of that fuel, 0.05 grams per cubic meter (2.9 $lb/10^6$ ft^3).

Emissions for combustion of coke oven gas can be estimated in the same fashion. Assume that cleaned coke oven gas has as much particulate as cleaned blast furnace gas. Since one third of the coke oven gas is methane, the main component of natural gas, it is assumed that the combustion of this methane in coke oven gas generates 0.06 grams per cubic meter (3.3 $lb/10^6$ ft^3) of particulate. Thus, the emission factor for the combustion of coke oven gas is the sum of the particulate loading and that generated by the methane combustion, or 0.1 grams per cubic meter (6.2 $lb/10^6$ ft^3).

Open Dust Sources - Like process emission sources, open dust sources contribute to the atmospheric particulate burden. Open dust sources include 1) vehicle traffic on paved and unpaved roads, 2) raw material handling outside of buildings and 3) wind erosion from storage piles and exposed terrain. Vehicle traffic consists of plant personnel and visitor vehicles; plant service vehicles; and trucks handling raw materials, plant deliverables, steel products and waste materials. Raw materials are handled by clamshell buckets, bucket/ladder conveyors, rotary railroad dumps, bottom railroad dumps, front end loaders, truck dumps, and conveyor transfer stations, all of which disturb the raw material and expose fines to the wind. Even fine materials resting on flat areas or in storage piles are exposed and are subject to wind erosion. It is not unusual to have several million tons of raw materials stored at a plant and to have in the range of 10 to 100 acres of exposed area there.

Open dust source emission factors for iron and steel production are presented in Table 7.5-1. These factors were determined through source testing at various integrated iron and steel plants.

As an alternative to the single valued open dust emission factors given in Table 7.5-1, empirically derived emission factor equations are presented in Chapter 11 of this document. Each equation was developed for a source operation defined on the basis of a single dust generating mechanism which crosses industry lines, such as vehicle traffic on unpaved roads. The predictive equation explains much of the observed variance in measured emission factors by relating emissions to parameters which characterize source conditions. These parameters may be grouped into three categories: 1) measures of source activity or energy expended (e.g., the speed

TABLE 7.5-1. UNCONTROLLED PARTICULATE EMISSION FACTORS FOR OPEN DUST SOURCES AT IRON AND STEEL MILLS[a]

Operation	Emissions by particle size range (aerodynamic diameter) < 30 μm	< 15 μm	< 10 μm	< 5 μm	< 2.5 μm	Units[b]	Emission Factor Rating
Continuous drop							
Conveyor transfer station							
Sinter[c]	13	9.0	6.5	4.2	2.3	g/Mg	D
	0.026	0.018	0.013	0.0084	0.0046	lb/T	D
Pile formation - stacker							
Pellet ore[c]	1.2	0.75	0.55	0.32	0.17	g/Mg	B
	0.0024	0.0015	0.0011	0.00064	0.00034	lb/T	B
Lump ore[c]	0.15	0.095	0.075	0.040	0.022	g/Mg	C
	0.00030	0.00019	0.00015	0.000081	0.000043	lb/T	C
Coal[d]	0.055	0.034	0.026	0.014	0.0075	g/Mg	E
	0.00011	0.000069	0.000052	0.000029	0.000015	lb/T	E
Batch drop							
Front end loader/truck[c]							
High silt slag	13	8.5	6.5	4.0	2.3	g/Mg	C
	0.026	0.017	0.013	0.0080	0.0046	lb/T	C
Low silt slag	4.4	2.9	2.2	1.4	0.80	g/Mg	C
	0.0088	0.0058	0.0043	0.0028	0.0016	lb/T	C
Vehicle travel on unpaved roads							
Light duty vehicle[d]	0.51	0.37	0.28	0.18	0.10	kg/VKT	C
	1.8	1.3	1.0	0.64	0.37	lb/VMT	C
Medium duty vehicle[d]	2.1	1.5	1.2	0.70	0.42	kg/VKT	C
	7.3	5.2	4.1	2.5	1.5	lb/VMT	C
Heavy duty vehicle[b]	3.9	2.7	2.1	1.4	0.76	kg/VKT	B
	14	9.7	7.6	4.8	2.7	lb/VMT	B
Vehicle travel on paved roads							
Light/heavy vehicle mix[c]	0.22	0.16	0.12	0.079	0.042	kg/VKT	C
	0.78	0.56	0.44	0.28	0.15	lb/VMT	C

[a] Predictive emission factor equations, which generally provide more accurate estimates of emissions, are presented in Chapter 11.
[b] Units/unit of material transferred. Units/unit of distance traveled.
[c] Reference 3. Interpolation to other particle sizes will be approximate.
[d] Reference 4. Interpolation to other particle sizes will be approximate.

and weight of a vehicle traveling on an unpaved road), 2) properties of the material being disturbed (e.g., the content of suspendible fines in the surface material on an unpaved road) and 3) climatic parameters (e.g., number of precipitation free days per year, when emissions tend to a maximum).

Because the predictive equations allow for emission factor adjustment to specific source conditions, the equations should be used in place of the factors in Table 7.5-1, if emission estimates for sources in a specific iron and steel facility are needed. However, the generally higher quality ratings assigned to the equations are applicable only if 1) reliable values of correction parameters have been determined for the specific sources of interest and 2) the correction parameter values lie within the ranges tested in developing the equations. Chapter 11 lists measured properties of aggregate process materials and road surface materials in the iron and steel industry, which can be used to estimate correction parameter values for the predictive emission factor equations, in the event that site specific values are not available. Use of mean correction parameter values from Chapter 11 reduces the quality ratings of the emission factor equation by one level.

Particulate emission factors for iron and steel plant processes are in Table 7.5-2. These emission factors are a result of an extensive investigation by EPA and the American Iron and Steel Institute.[2] Carbon monoxide emission factors are in Table 7.5-3.[5]

TABLE 7.5-2. PARTICULATE EMISSION FACTORS FOR IRON AND STEEL MILLS[a]

Source	Units	Emissions		Emission Factor Rating
Blast furnaces				
Slips	kg (lb)/slip	39.5	(87)	D
Uncontrolled cast house emissions	kg/Mg (lb/ton) hot metal			
Monitor		0.3	(0.6)	B
Tap hole and trough (not runners)		0.15	(0.3)	B
Sintering				
Windbox emissions	kg/Mg (lb/ton) finished sinter			
Uncontrolled				
Leaving grate		5.56	(11.1)	B
After coarse particulate removal		4.35	(8.7)	A
Controlled by dry ESP		0.8	(1.6)	B
Controlled by wet ESP		0.085	(0.17)	B
Controlled by scrubber		0.235	(0.47)	B
Controlled by cyclone		0.5	(1)	B
Sinter discharge (breaker and hot screens)	kg/Mg (lb/ton) finished sinter			
Uncontrolled		3.4	(6.8)	B
Controlled by baghouse		0.05	(0.1)	B
Controlled by orifice scrubber		0.295	(0.59)	A
Windbox and discharge	kg/Mg (lb/ton) finished sinter			
Controlled by baghouse		0.15	(0.3)	A
Basic oxygen furnaces				
Top blown furnace melting and refining	kg/Mg (lb/ton) steel			
Uncontrolled		14.25	(28.5)	B
Controlled by open hood vented to:				
ESP		0.065	(0.13)	A
Scrubber		0.045	(0.09)	B
Controlled by closed hood vented to:				
Scrubber		0.0034	(0.0068)	A
QBOP melting and refining	kg/Mg (lb/ton) steel			
Controlled by scrubber		0.028	(0.056)	A
Charging	kg/Mg (lb/ton) hot metal			
At source		0.3	(0.6)	A
At building monitor		0.071	(0.142)	B
Tapping	kg/Mg (lb/ton) steel			
At source		0.46	(0.92)	A
At building monitor		0.145	(0.29)	B
Hot metal transfer	kg/Mg (lb/ton) hot metal			
At source		0.095	(0.19)	A
At building monitor		0.028	(0.056)	B
BOF monitor (all sources)	kg/Mg (lb/ton) steel	0.25	(0.5)	B
Electric arc furnaces				
Melting and refining	kg/Mg (lb/ton) steel			
Uncontrolled				
Carbon steel		19	(38)	C
Charging, tapping and slagging	kg/Mg (lb/ton) steel			
Uncontrolled emissions escaping monitor		0.7	(1.4)	C
Melting, refining, charging, tapping and slagging	kg/Mg (lb/ton) steel			
Uncontrolled				
Alloy steel		5.65	(11.3)	A
Carbon steel		25	(50)	C
Controlled by:				
Configuration 1				
(building evacuation to baghouse for alloy steel)		0.15	(0.3)	A
Configuration 2				
(DSE plus charging hood vented to common baghouse for carbon steel)		0.0215	(0.043)	C

(continued)

TABLE 7.5-2. PARTICULATE EMISSION FACTORS FOR IRON AND STEEL MILLS[a] (continued)

Source	Units	Emissions		Emission Factor Rating
Open hearth furnaces				
Melting and refining	kg/Mg (lb/ton) steel			
Uncontrolled		10.55	(21.1)	A
Controlled by ESP		0.14	(0.28)	A
Roof monitor emissions		0.084	(0.168)	C
Teeming				
Leaded steel	kg/Mg (lb/ton) steel			
Uncontrolled (as measured at the source)		0.405	(0.81)	A
Controlled by side draft hood vented to baghouse		0.0019	(0.0038)	A
Unleaded steel				
Uncontrolled (as measured at the source)		0.035	(0.07)	A
Controlled by side draft hood vented to baghouse		0.0008	(0.0016)	A
Machine scarfing				
Uncontrolled	kg/Mg (lb/ton) metal through scarfer	0.05	(0.1)	B
Controlled by ESP		0.0115	(0.023)	A
Miscellaneous combustion sources[b]				
Boilers, soaking pits and slab reheat furnaces	kg/10^9 J (lb/10^6 BTU)			
Blast furnace gas		0.015	(0.035)	D
Coke oven gas		0.0052	(0.012)	D

[a] Reference 2. ESP = electrostatic precipitator. DSE = direct shell evacuation.
[b] For fuels such as coal, fuel oil and natural gas, use the emission factors presented in Chapter 1 of this document. The factor rating for these fuels in boilers is A, and in soaking pits and slab reheat furnaces is D.

TABLE 7.5-3. UNCONTROLLED CARBON MONOXIDE EMISSION FACTORS FOR IRON AND STEEL MILLS[a]

EMISSION FACTOR RATING: C

Source	kg/Mg	lb/ton
Sintering windbox[b]	22	44
Basic oxygen furnace	69	138
Electric arc furnace	9	18

[a] Reference 5.
[b] Expressed as units of emissions per unit of finished sinter.

References for Section 7.5

1. H. E. McGannon, ed., The Making, Shaping and Treating of Steel, U. S. Steel Corporation, Pittsburgh, PA, 1971.

2. T. A. Cuscino, Jr., Particulate Emission Factors Applicable to the Iron and Steel Industry, EPA-450/4-79-029, U. S. Environmental Protection Agency, Research Triangle Park, NC, September 1979.

3. R. Bohn, et al., Fugitive Emissions from Integrated Iron and Steel Plants, EPA-600/2-78-050, U. S. Environmental Protection Agency, Research Triangle Park, NC, March 1978.

4. C. Cowherd, Jr., et al., Iron and Steel Plant Open Source Fugitive Emission Evaluation, EPA-600/2-79-103, U. S. Environmental Protection Agency, Research Triangle Park, NC, May 1979.

5. Control Techniques for Carbon Monoxide Emissions from Stationary Sources, AP-65, U. S. Department of Health, Education and Welfare, Washington, DC, March 1970.

7.6 PRIMARY LEAD SMELTING

7.6.1 Process Description [1-3]

Lead is usually found naturally as a sulfide ore containing small amounts of copper, iron, zinc and other trace elements. It is normally concentrated at the mine from an ore of 3 to 8 percent lead to an ore concentrate of 55 to 70 percent lead, containing from 13 to 19 percent, by weight, free and uncombined sulfur. A typical flow sheet for the production of lead metal from ore concentrate is shown in Figure 7.6-1.

Processing involves three major steps:

- Sintering, in which the concentrated lead and sulfur are oxidized to produce lead oxide and sulfur dioxide. (Simultaneously, the charge concentrates, recycled sinter, sand and other inert materials are agglomerated to form a dense, permeable substance called sinter.)

- Reducing the lead oxide contained in the sinter to produce molten lead bullion.

- Refining the lead bullion to eliminate any impurities.

7.6.1.1 Sintering - Sinter is produced by a sinter machine, a continuous steel pallet conveyor belt moved by gears and sprockets. Each pallet consists of perforated or slotted grates, beneath which are windboxes connected to fans that provide a draft through the moving sinter charge. Depending on the direction of this draft, the sinter machine is either of the updraft or downdraft type. Except for the draft direction, however, all machines are similar in design, construction and operation.

The sintering reaction is autogenous, occuring at a temperature of approximately 1800°F (1000°C):

$$2PbS + 3O_2 \rightarrow 2PbO + 2SO_2 \qquad (1)$$

Operating experience has shown that system operation and product quality are optimum when the sulfur content of the sinter charge is between 5 and 7 percent by weight. To maintain this desired sulfur content, sulfide-free fluxes such as silica and limestone, plus large amounts of recycled sinter and smelter residues, are added to the mix. The quality of the product sinter is usually determined by its Ritter Index hardness, which is inversely proportional to the sulfur content. Hard quality sinter (low sulfur content) is preferred, because it resists crushing during discharge from the sinter machine. Undersized sinter usually results from insufficient desulfurization and is recycled for further processing.

Of the two kinds of sintering machines used, the updraft design is superior for many reasons. First, the sinter bed thickness is more permeable (and hence can be larger), thereby permitting a higher production rate than that of a downdraft machine of similar dimensions. Secondly, the small amounts of elemental lead that form during sintering will solidify at their point of formation in updraft machines, whereas, in downdraft operation, the metal tends to flow downward and collect on the grates or at the bottom of the sinter charge, thus causing increased pressure drop and attendant reduced blower capacity. In addition, the updraft system exhibits the capability of producing sinter of higher lead content and requires less maintenance than the downdraft machine. Finally, and most important from an air pollution control standpoint, updraft sintering can produce a single strong SO_2 effluent stream from the operation, by use of weak gas recirculation. This, in turn, permits more efficient and economical use of control methods such as sulfuric acid recovery devices.

7.6.1.2 Reduction - Lead reduction is carried out in a blast furnace, basically a water jacketed shaft furnace supported by a refractory base. Tuyeres, through which combustion air is admitted under pressure, are located near the bottom and are evenly spaced on either side of the furnace.

The furnace is charged with a mixture of sinter (80 - 90 percent of charge), metallurgical coke (8 - 14 percent of charge), and other materials, such as limestone, silica, litharge, slag-forming constituents, and various recycled and cleanup materials. In the furnace, the sinter is reduced to lead bullion by reactions (2) through (6).

$$PbO + CO \rightarrow Pb + CO_2 \quad (2)$$

$$C + O_2 \rightarrow CO_2 \quad (3)$$

$$C + CO_2 \rightarrow 2CO \quad (4)$$

$$2PbO + PbS \rightarrow 3Pb + SO_2 \quad (5)$$

$$PbSO_4 + PbS \rightarrow 2Pb + 2SO_2 \quad (6)$$

Carbon monoxide and heat required for reduction are supplied by the combustion of coke. Most of the impurities are eliminated in the slag. Solid products from the blast furnace generally separate into four layers: speiss, the lightest material (basically arsenic and antimony), matte (copper sulfide and other metal sulfides), slag (primarily silicates), and lead bullion. The first three layers are combined as slag, which is continually collected from the furnace and either processed at the smelter for its metal content or shipped to treatment facilities.

Sulfur oxides are also generated in blast furnaces from small quantities of residual lead sulfide and lead sulfates in the sinter feed. The quantity of these emissions is a function not only of the residual sulfur content in the sinter, but also of the amount of sulfur that is captured by copper and other impurities in the slag.

Rough lead bullion from the blast furnace usually requires preliminary treatment (drossing) in kettles before undergoing refining operations. First, the bullion is cooled to 700 to 800°F (370 - 430°C). Copper and small amounts of sulfur, arsenic, antimony and nickel are removed from solution, collecting on the surface as a dross. This dross, in turn, is treated in a reverberatory furnace where the copper and other metal impurities are further concentrated before being routed to copper smelters for their eventual recovery. Drossed lead bullion is treated for further copper removal by the addition of sulfurbearing material and zinc, and/or aluminum, to lower the copper content to approximately 0.01 percent.

7.6.1.3 Refining - The third and final phase of smelting, the refining of the bullion in cast iron kettles, occurs in five steps:

- Removal of antimony, tin and arsenic.

- Removal of precious metals by Parke's Process, in which zinc combines with gold and silver to form an insoluble intermetallic at operating temperatures.

- Vacuum removal of zinc.

- Removal of bismuth using the Betterson Process, which is the addition of calcium and magnesium to form an insoluble compound with the bismuth that is skimmed from the kettle.

- Removal of remaining traces of metal impurities by addition of NaOH and $NaNO_3$.

The final refined lead, commonly of 99.990 to 99.999 percent purity, is then cast into 100 pound pigs for shipment.

7.6.2 Emissions and Controls[1,2]

Each of the three major lead smelting process steps generates substantial quantities of particulates and/or sulfur dioxide.

Nearly 85 percent of the sulfur present in the lead ore concentrate is eliminated in the sintering operation. In handling process offgases, either a single weak stream is taken from the machine hood at less than 2 percent SO_2, or two streams are taken, one strong stream (5 - 7 percent SO_2) from the feed end of the machine and one weak stream (<0.5 percent SO_2) from the discharge end. Single stream operation has been

used when there is little or no market for recovered sulfur, so that the uncontrolled weak SO_2 stream is emitted to the atmosphere. When sulfur removal is required, however, dual stream operation is preferred. The strong stream is sent to a sulfuric acid plant, and the weak stream is vented to the atmosphere after removal of particulates.

TABLE 7.6-1. EMISSION FACTORS FOR PRIMARY LEAD SMELTING PROCESSES WITHOUT CONTROLS[a]

EMISSION FACTOR RATING: B

Process	Total Particulates		Sulfur dioxide		Lead	
	kg/Mg	lb/ton	kg/Mg	lb/ton	kg/Mg	lb/ton
Ore crushing[b]	1.0	2.0	-	-	0.15	0.3
Sintering (updraft)[c]	106.5	213.0	275.0	550.0	87 (4.2-170)	174 (8.4-340)
Blast furnace[d]	180.5	361.0	22.5	45.0	29 (8.7-50)	59 (17.5-100)
Dross reverberatory furnace[e]	10.0	20.0	Neg	Neg	2.4 (1.3-3.5)	4.8 (2.6-7.0)
Materials handling[f]	2.5	5.0	-	-	-	-

[a]Ore crushing emission factors expressed as kg/Mg (lb/ton) of crushed ore. All other emission factors expressed as kg/Mg (lb/ton) of lead product. Dash indicates no available data.
[b]References 2, 13.
[c]References 1, 4-6, 11, 14-17, 21-22.
[d]References 1-2, 7, 12, 14, 16-17, 19.
[e]References 2, 11-12, 14, 18, 20.
[f]Reference 2.

When dual gas stream operation is used with updraft sinter machines, the weak gas stream can be recirculated through the bed to mix with the strong gas stream, resulting in a single stream with an SO_2 concentration of about 6 percent. This technique has the overall effect of decreasing machine production capacity, but permits a more convenient and economical recovery of the SO_2 by sulfuric acid plants and other control methods.

Without weak gas recirculation, the latter portion of the sinter machine acts as a cooling zone for the sinter and, consequently, assists in the reduction of dust formation during product discharge and screening. However, when recirculation is used, the sinter is usually discharged in a relatively hot state, 400 - 500°C (745 to 950°F), with an attendant increase in particulates. Methods for reducing these dust quantities include recirculation of offgases through the sinter bed, relying upon the filtering effect of the bed or the ducting of gases from the discharge through a particulate collection device and then to the atmosphere. Because reaction activity has ceased in the discharge area, these latter gases contain little SO_2.

The particulate emissions from sinter machines range from 5 to 20 percent of the concentrated ore feed. When expressed in terms of product weight, a typical emission is estimated to be 213 lb/ton (106.5 kg/MT) of lead produced. This value, along with other particulate and SO_2 factors, appears in Table 7.6-1.

Table 7.6-2. PARTICLE SIZE DISTRIBUTION OF FLUE DUST FROM UPDRAFT SINTERING MACHINES

Size (μm)	Percent by weight
20 - 40	15 - 45
10 - 20	9 - 30
5 - 10	4 - 19
<5	1 - 10

Typical material balances from domestic lead smelters indicate that about 15 percent of the sulfur in the ore concentrate fed to the sinter machine is eliminated in the blast furnace. However, only half of this amount (about 7 percent of the total sulfur in the ore) is emitted as SO_2. The remainder is captured by the slag. The concentration of this SO_2 stream can vary from 500 to 2500 ppm, by volume (1.4 - 7.2 g/m^3), depending on the amount of dilution air injected to oxidize the carbon monoxide and to cool the stream before baghouse particulate removal.

Particulate emissions from blast furnaces contain many different kinds of material, including a range of lead oxides, quartz, limestone, iron pyrites, iron-lime-silicate slag, arsenic, and other metal-containing compounds associated with lead ores. These particles readily agglomerate and are primarily submicron in size, difficult to wet, and cohesive. They will bridge and arch in hoppers. On the average, this dust loading is quite substantial (see Table 7.6-1).

Virtually no sulfur dioxide emissions are associated with the various refining operations. However, a small amount of particulate is generated by the dross reverberatory furnace, about 20 lb/ton (10 kg/MT) of lead.

Finally, minor quantities of particulates are generated by ore crushing and materials handling operations. These emission factors are also presented in Table 7.6-1.

Table 7.6-2 is a listing of size distributions of flue dust from updraft sintering machine effluent. Though these are not fugitive emissions, the size distributions may closely resemble those of the fugitive emissions. Particulate fugitive emissions from the blast furnace consist basically of lead oxides, 92 percent of which are less than 4 μm in size. Uncontrolled emissions from a lead dross reverberatory furnace are mostly less than 1 μm, and this may also be the case with the fugitive emissions.

Table 7.6-3. EFFICIENCIES OF REPRESENTATIVE CONTROL DEVICES USED WITH PRIMARY LEAD SMELTING OPERATIONS

Control method	Efficiency range, %	
	Particulates	Sulfur dioxide
Centrifugal collector[a]	80 to 90	-
Electrostatic precipitator[a]	95 to 99	-
Fabric filter[a]	95 to 99	-
Tubular cooler (associated with waste heat boiler)[a]	70 to 80	-
Sulfuric acid plant (single contact)[b,c]	99.5 to 99.9	96 to 97
Sulfuric acid plant (dual contact)[b,c]	99.5 to 99.9	96 to 99.9
Elemental sulfur recovery plant[b,d]	-	90
Dimethylaniline (DMA) absorption process[b,e]	-	95 to 99
Ammonia absorption process[b,f]	-	92 to 95

[a] Reference 2.
[b] Reference 1.
[c] High particulate control efficiency due to action of acid plant gas cleaning system. Based on SO_2 inlet concentrations of 5-7%, typical outlet emission levels are 2000 ppm (5.7 g/m^3) for single contact and 500 ppm (1.4 g/m^3) for dual contact.
[d] Collection efficiency for a two stage uncontrolled Claus type plant. Refer to Section 5.18 for more information.
[e] Based on SO_2 inlet concentrations of 4-6%, typical outlet emission levels range from 500-3000 ppm (1.4-8.6 g/m^3).
[f] Based on SO_2 inlet concentrations of 1.5-2.5%, typical outlet emission level is 1200 ppm (3.4 g/m^3).

Table 7.6-4. POTENTIAL FUGITIVE EMISSION FACTORS FOR PRIMARY LEAD SMELTING PROCESSES WITHOUT CONTROLS[a,b]

EMISSION FACTOR RATING: E

Process	Particulates	
	lb/ton	kg/MT
Ore mixing and pelletizing (crushing)	2.26	1.13
Car charging (conveyor loading and transfer) of sinter	0.50	0.25
Sinter machine leakage[c]	0.68	0.34
Sinter return handling	9.00	4.50
Sinter machine discharge, sinter crushing and screening[c]	1.50	0.75
Sinter transfer to dump area	0.20	0.10
Sinter product dump area	0.01	0.005
Blast furnace (charging, blow condition, tapping)	0.16	0.08
Lead pouring to ladle, transferring, and slag pouring[d]	0.93	0.47
Slag cooling[e]	0.47	0.24
Zinc fuming furnace vents	4.60	2.30
Dross kettle	0.48	0.24
Reverberatory furnace leakage	3.00	1.50
Silver retort building	1.80	0.90
Lead casting	0.87	0.44

[a] All factors are expressed in units per end product lead produced, except sinter operations, which are expressed in units per sinter or sinter handled/transferred/charged.
[b] Reference 8, except where noted.
[c] References 9 and 10. Engineering judgement using steel sinter machine leakage emission factor.
[d] Reference 2.
[e] Reference 2. Engineering judgement, estimated to be half the magnitude of lead pouring and ladling operations.

Emission controls on lead smelter operations are for particulates and sulfur dioxide. The most commonly employed high efficiency particulate control devices are fabric filters and electrostatic precipitators, which often follow centrifugal collectors and tubular coolers (pseudogravity collectors). Three of the 6 lead smelters presently operating in the United States use single absorption sulfuric acid plants for control of sulfur dioxide emissions from sinter machines and, occasionally, from blast furnaces. Single stage plants can attain SO_x levels of 2000 ppm (5.7 g/m^3), and dual stage plants can attain levels of 550 ppm (1.6 g/m^3). Typical efficiencies of dual stage sulfuric acid plants in removing sulfur oxides can exceed 99 percent. Other technically feasible SO_2 control methods are elemental sulfur recovery plants and dimethylaniline (DMA) and ammonia absorption processes. These methods and their representative control efficiencies are listed in Table 7.6-3.

References for Section 7.6

1. Charles Darvin and Fredrick Porter, Background Information for New Source Peformance Standards: Primary Copper, Zinc, and Lead Smelters, Volume I, EPA-450/2-74-002a, U.S. Environmental Protection Agency, Research Triangle Park, NC, October 1974.

2. A. E. Vandergrift, et al., Handbook of Emissions, Effluents, and Control Practices for Stationary Particulate Pollution Sources, Three volumes, HEW Contract No. CPA 22-69-104, Midwest Research Institute, Kansas City, MO, November 1970 - May 1971.

3. A. Worcester and D. H. Beilstein, "The State of the Art: Lead Recovery", Presented at the 10th Annual Meeting of the Metallurgical Society, AIME, New York, March 1971.

4. T. J. Jacobs, "Visit to St. Joe Minerals Corporation Lead Smelter, Herculaneum, MO", Memorandum to Emission Standards and Engineering Division, Office of Air Quality Planning and Standards, U.S. Environmental Protection Agency, Research Triangle Park, NC, October 21, 1971.

5. T. J. Jacobs, "Visit to Amax Lead Company, Boss, MO", Memorandum to Emission Standards and Engineering Division, Office of Air Quality Planning and Standards, U.S. Environmental Protection Agency, Research Triangle Park, NC, October 28, 1971.

6. Written Communication from R. B. Paul, American Smelting and Refining Co., Glover, MO, to Regional Administrator, U.S. Environmental Protection Agency, Kansas City, MO, April 3, 1973.

7. Emission Test No. 72-MM-14, Office of Air Quality Planning and Standards, U. S. Environmental Protection Agency, Research Triangle Park, NC, May 1972.

8. Silver Valley/Bunker Hill Smelter Environmental Investigation (Interim Report), EPA Contract No. 68-02-1343, PEDCo Environmental, Specialists, Inc., Cincinnati, OH, February 1975.

9. R. E. Iversen, "Meeting with U. S. Environmental Protection Agency and AISI on Steel Facility Emission Factors", Memorandum, Office of Air Quality Planning and Standards, U. S. Environmental Protection Agency, Research Triangle Park, NC, June 7, 1976.

10. G. E. Spreight, "Best Practical Means in the Iron and Steel Industry", The Chemical Engineer, London, 271:132-139, March 1973.

11. Control Techniques for Lead Air Emissions, EPA-450/2-77-012, U. S. Environmental Protection Agency, Research Triangle Park, NC, January 1978.

12. Systems Study for Control of Emissions: Primary Nonferrous Smelting Industry, U. S. Department of Health, Education and Welfare, Washington, DC, June 1969.

13. Environmental Assessment of the Domestic Primary Copper, Lead, and Zinc Industry, EPA Contract No. 68-02-1321, PEDCo-Environmental Specialists, Inc., Cincinnati, OH, September 1976.

14. H. R. Jones, Pollution Control in the Nonferrous Metals Industry, Noyes Data Corporation, Park Ridge, NJ, 1972.

15. L. J. Duncan and E. L. Keitz, "Hazardous Particulate Pollution from Typical Operations in the Primary Nonferrous Smelting Industry", presented at the 67th Annual Meeting of the Air Pollution Control Association, Denver, CO, June 1974.

16. E. P. Shea, Source Sampling Report: Emissions from Lead Smelters, EPA Contract No. 68-02-0228, Midwest Research Institute, Kansas City, MO, 1973.

17. R. C. Hussy, Source Testing: Emissions from a Primary Lead Smelter, EPA Contract No. 68-02-0228, Midwest Research Institute, Kansas City, MO, 1973.

18. Emission Test No. 73-PLD-1, Office of Air Quality Planning and Standards, U. S. Environmental Protection Agency, Research Triangle Park, NC, October 1973.

19. Interim Report on Control Techniques for Lead Air Emissions, Development of Lead Emission Factors, and 1975 National Lead Emission Inventory, EPA Contract No. 68-02-1375, PEDCo-Environmental Specialists, Inc., Cincinnati, OH, June 1976.

20. S. Wyatt, et al., Preferred Standards Path Analysis on Lead Emissions from Stationary Sources, Office of Air Quality Planning and Standards, Research Triangle Park, NC, September 1974.

21. A. E. Vandergrift, et al., Particulate Pollutant System Study - Mass Emissions, PB-203-128, PB-203-522 and PB-203-521, U. S. Environmental Protection Agency, Research Triangle Park, NC, May 1971.

22. V. S. Katari, et al., Trace Pollutant Emissions from the Processing of Metallic Ores, EPA-650/2-74-115, U. S. Environmental Protection Agency, Research Triangle Park, NC, October 1974.

7.7 ZINC SMELTING

7.7.1 Process Description[1,2]

As stated previously, most domestic zinc comes from zinc and lead ores. Another important source of raw material for zinc metal has been zinc oxide from fuming furnaces. For efficient recovery of zinc, sulfur must be removed from concentrates to a level of less than 2 percent. This is done by fluidized beds or multiple-hearth roasting occasionally followed by sintering. Metallic zinc can be produced from the roasted ore by the horizontal or vertical retort process or by the electrolytic process if a high-purity zinc is needed.

7.7.2 Emissions and Controls[1,2]

Dust, fumes, and sulfur dioxide are emitted from zinc concentrate roasting or sintering operations. Particulates may be removed by electrostatic precipitators or baghouses. Sulfur dioxide may be converted directly into sulfuric acid or vented. Emission factors for zinc smelting are presented in Table 7.7-1.

TABLE 7.7-1. EMISSION FACTORS FOR PRIMARY ZINC SMELTING WITHOUT CONTROLS[a]

EMISSION FACTOR RATING: B

Type of operation	Particulates		Sulfur oxides		Lead[b]	
	kg/Mg	lb/ton	kg/Mg	lb/ton	kg/Mg	lb/ton
Ore unloading, storage and transfer	-	-	-	-	1.95 (1-2.9)	3.85 (2.0-5.7)
Roasting (multiple-hearth)[c]	60	120	550	1100		
Sintering[d]	45	90	e	e	19.25 (13.5-25)	38.5 (27-50)
Horizontal retorts[f]	4	8	-	-	1.2	2.4
Vertical retorts[f]	50	100	-	-	2.25 (2-2.5)	4.5 (4-5)
Electrolytic process	1.5	3	-	-	-	-

[a]Approximately 2 unit weights of concentrated ore are required to produce 1 unit weight of zinc metal. Emission factors expressed as units per unit weight of concentrated ore produced. Dash indicates no available data.
[b]References 1-3.
[c]References 4-5.
[d]References 5-6.
[e]Included in SO_2 losses from roasting.
[f]Reference 3.

References for Section 7.7

1. Control Techniques for Lead Air Emissions, EPA-450/2-77-012, U. S. Environmental Protection Agency, Research Triangle Park, NC, December 1977.

2. H. R. Jones, Pollution Control in the Nonferrous Metals Industry, Noyes Data Corporation, Park Ridge, NJ, 1972.

3. G. B. Carne, Control Techniques for Lead Emissions, Draft Report, U. S. Environmental Protection Agency, Research Triangle Park, NC, February 1971.

4. R. L. Duprey, Compilation of Air Pollutant Emission Factors, U. S. DHEW, PHS, National Center for Air Pollution Control, Durham, NC, PHS Publication Number 999-AP-42, 1968, p. 26-28.

5. A. Stern (ed), "Sources of Air Pollution and Their Control, Air Pollution, Vol III, 2nd Ed., New York, NY, Academic Press, 1968, p. 182-186.

6. G. Sallee, Private communication on Particulate Pollutant Study, Midwest Research Institute, Kansas City, MO, prepared for National Air Pollution Control Administration, Durham, NC, under Contract Number 22-69-104, June 1970.

7. Systems Study for Control of Emissions in the Primary Nonferrous Smelting Industry, 3 Volumes, San Francisco, Arthur G. McKee and Company, June 1969.

7.8 SECONDARY ALUMINUM OPERATIONS

7.8.1 General

Secondary aluminum operations involve the cleaning, melting, refining and pouring of aluminum recovered from scrap. The processes used to convert scrap aluminum to secondary aluminum products such as lightweight metal alloys for industrial castings and ingots are presented in Figure 7.8-1. Production involves two general classes of operation, scrap treatment and smelting/refining.

Scrap treatment involves receiving, sorting and processing scrap to remove contaminants and to prepare the material for smelting. Processes based on mechanical, pyrometallurgical and hydrometallurgical techniques are used, and those employed are selected to suit the type of scrap processed.

The smelting/refining operation generally involves the following steps:

- charging
- melting
- fluxing
- alloying
- mixing
- demagging
- degassing
- skimming
- pouring

All of these steps may be involved in each operation, with process distinctions being in the furnace type used and in emission characteristics. However, as with scrap treatment, not all of these steps are necessarily incorporated into the operations at a particular plant. Some steps may be combined or reordered, depending on furnace design, scrap quality, process inputs and product specifications.

Scrap treatment - Purchased aluminum scrap undergoes inspection upon delivery. Clean scrap requiring no treatment is transported to storage or is charged directly into the smelting furnace. The bulk of the scrap, however, must be manually sorted as it passes along a steel belt conveyor. Free iron, stainless steel, zinc, brass and oversized materials are removed. The sorted scrap then goes to appropriate scrap treating processes or is charged directly to the smelting furnace.

Sorted scrap is conveyed to a ring crusher or hammer mill, where the material is shredded and crushed, with the iron torn away from the aluminum. The crushed material is passed over vibrating screens to remove dirt and fines, and tramp iron is removed by magnetic drums and/or belt separators. Baling equipment compacts bulky aluminum scrap into 1 x 2 meter (3 x 6 foot) bales.

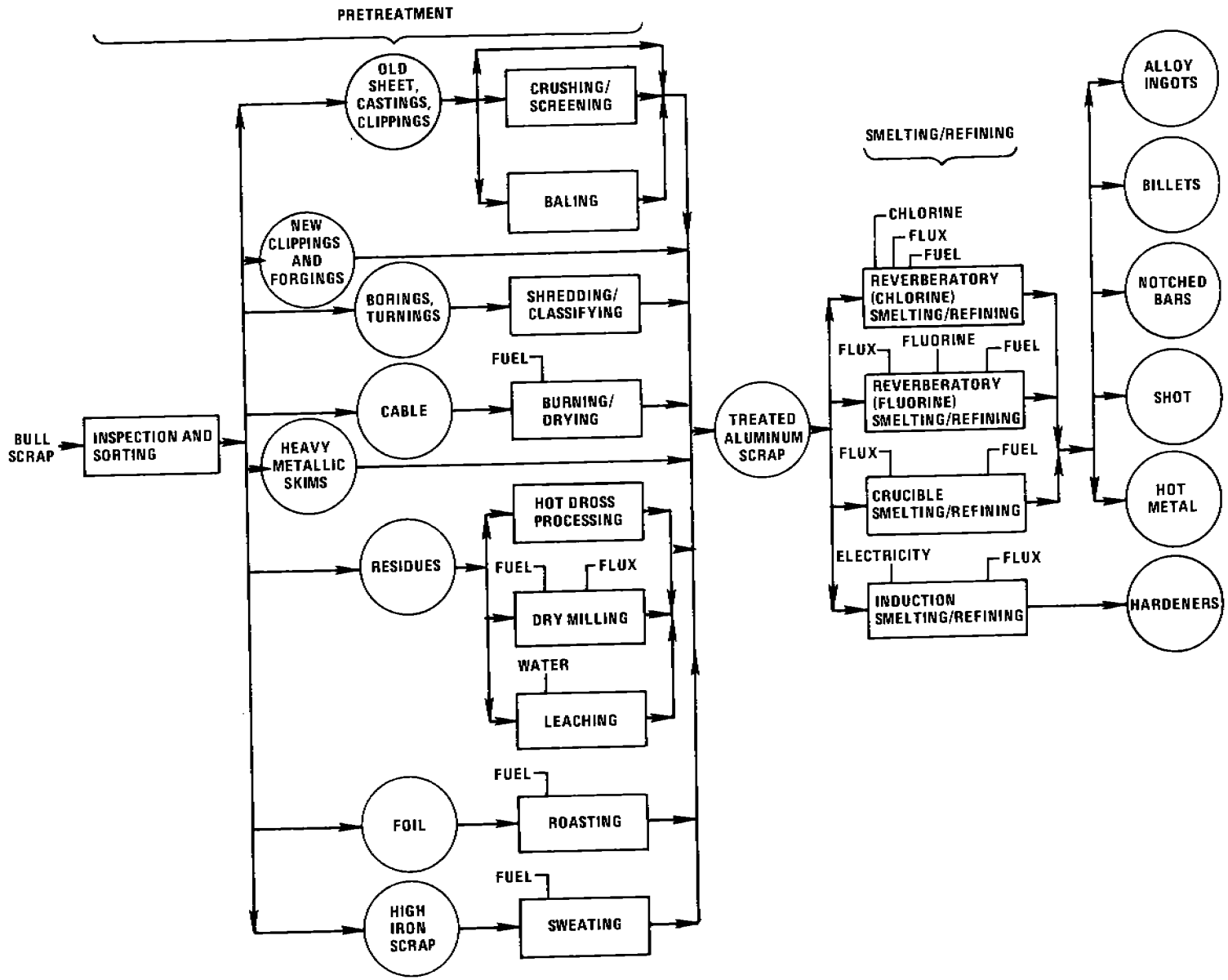

Figure 7.8-1. Process flow diagram for the secondary aluminum processing industry.

Pure aluminum cable with steel reinforcement or insulation is cut by alligator type shears and granulated or further reduced in hammer mills, to separate the iron core and the plastic coating from the aluminum. Magnetic processing accomplishes iron removal, and air classification separates the insulation.

Borings and turnings, in most cases, are treated to remove cutting oils, greases, moisture and free iron. The processing steps involved are (a) crushing in hammer mills or ring crushers, (b) volatilizing the moisture and organics in a gas or oil fired rotary dryer, (c) screening the dried chips to remove aluminum fines, (d) removing iron magnetically and (e) storing the clean dried borings in tote boxes.

Aluminum can be recovered from the hot dross discharged from a refining furnace by batch fluxing with a salt/cryolite mixture in a mechanically rotated, refractory lined barrel furnace. The metal is tapped periodically through a hole in its base. Secondary aluminum recovery from cold dross and other residues from primary aluminum plants is carried out by means of this batch fluxing in a rotary furnace. In the dry milling process, cold aluminum laden dross and other residues are processed by milling, screening and concentrating to obtain a product containing at least 60-70 percent aluminum. Ball, rod or hammer mills can be used to reduce oxides and nonmetallics to fine powders. Separation of dirt and other unrecoverables from the metal is achieved by screening, air classification and/or magnetic separation.

Leaching involves (a) wet milling, (b) screening, (c) drying and (d) magnetic separation to remove fluxing salts and other non-recoverables from drosses, skimmings and slags. First, the raw material is fed into a long rotating drum or an attrition or ball mill where soluble contaminants are leached. The washed material is then screened to remove fines and dissolved salts and is dried and passed through a magnetic separator to remove ferrous materials. The nonmagnetics then are stored or charged directly to the smelting furnace.

In the roasting process, carbonaceous materials associated with aluminum foil are charred and then separated from the metal product.

Sweating is a pyrometallurgical process used to recover aluminum from high iron content scrap. Open flame reverberatory furnaces may be used. Separation is accomplished as aluminum and other low melting constituents melt and trickle down the hearth, through a grate and into air cooled molds or collecting pots. This product is termed "sweated pig". The higher melting materials, including iron, brass and oxidation products formed during the sweating process, are periodically removed from the furnace.

Smelting/refining - In reverberatory (chlorine) operations, reverberatory furnaces are commonly used to convert clean sorted scrap, sweated pigs or some untreated scrap to specification ingots, shot or hot metal. The scrap is first charged to the furnace by some mechanical means, often through charging wells designed to permit introduction of chips and light scrap below the surface of a previously melted charge ("heel"). Batch processing is generally practiced for alloy ingot production, and continuous feeding and pouring are generally used for products having less strict specifications.

Cover fluxes are used to prevent air contact with and consequent oxidation of the melt. Solvent fluxes react with nonmetallics such as burned coating residues and dirt to form insolubles which float to the surface as part of the slag.

Alloying agents are charged through the forewell in amounts determined by product specifications. Injection of nitrogen or other inert gases into the molten metal can be used to aid in raising dissolved gases (typically hydrogen) and intermixed solids to the surface.

Demagging reduces the magnesium content of the molten charge from approximately 0.3 to 0.5 percent (typical scrap value) to about 0.1 percent (typical product line alloy specification). When demagging with chlorine gas, chlorine is injected under pressure through carbon lances to react with magnesium and aluminum as it bubbles to the surface. Other chlorinating agents, or fluxes, are sometimes used, such as anhydrous aluminum chloride or chlorinated organics.

In the skimming step, contaminated semisolid fluxes (dross, slag or skimmings) are ladled from the surface of the melt and removed through the forewell. The melt is then cooled before pouring.

The reverberatory (fluorine) process is similar to the reverberatory (chlorine) smelting/refining process, except that aluminum fluoride (AlF_3) is employed in the demagging step instead of chlorine. The AlF_3 reacts with magnesium to produce molten metal aluminum and solid magnesium fluoride salt which floats to the surface of the molten aluminum and is skimmed off.

The crucible smelting/refining process is used to melt small batches of aluminum scrap, generally limited to 500 kg (1000 lb) or less. The metal treating process steps are essentially the same as those of reverberatory furnaces.

The induction smelting/refining process is designed to produce hardeners by blending pure aluminum and hardening agents in an electric induction furnace. The process steps include charging scrap to the furnace, melting, adding and blending the hardening agent, skimming, pouring and casting into notched bars.

7.8.2 Emissions and Controls[1]

Table 7.8-1 presents emission factors for the principal emission sources in secondary aluminum operations. Although each step in scrap treatment and smelting/refining is a potential source of emissions, emissions from most of the processing operations are either not characterized here or emit only small amounts of pollutants.

Crushing/screening produces small amounts of metallic and nonmetallic dust. Baling operations produce particulate emissions, primarily dirt and alumina dust resulting from aluminum oxidation. Shredding/classifying also emits small amounts of dust. Emissions from these processing steps are normally uncontrolled.

Burning/drying operations emit a wide range of pollutants. Afterburners are used generally to convert unburned hydrocarbons to CO_2 and H_2O. Other gases potentially present, depending on the composition of the organic contaminants, include chlorides, fluorides and sulfur oxides. Oxidized aluminum fines blown out of the dryer by the combustion gases comprise particulate emissions. Wet scrubbers are sometimes used in place of afterburners.

Mechanically generated dust from the rotating barrel dross furnace constitutes the main air emission of hot dross processing. Some fumes are produced from the fluxing reactions. Fugitive emissions are controlled by enclosing the barrel in a hood system and by ducting the stream to a baghouse. Furnace offgas emissions, mainly fluxing salt fume, are controlled by a venturi scrubber.

In dry milling, large amounts of dust are generated from the crushing, milling, screening, air classification and materials transfer steps. Leaching operations may produce particulate emissions during drying. Emissions from roasting are particulates from the charring of carbonaceous materials.

Emissions from sweating furnaces vary with the feed scrap composition. Smoke may result from incomplete combustion of organic contaminants (e.g., rubber, oil and grease, plastics, paint, cardboard, paper) which may be present. Fumes can result from oxidation of magnesium and zinc contaminants and from fluxes in recovered drosses and skims.

Atmospheric emissions from reverberatory (chlorine) smelting/refining represent a significant fraction of the total particulate and gaseous effluents generated in the secondary aluminum industry. Typical furnace effluent gases contain combustion products, chlorine, hydrogen chloride and metal chlorides of zinc, magnesium and aluminum, aluminum oxide and various metals and metal compounds, depending on the quality of scrap charged. Particulate emissions from one secondary aluminum smelter have a size distribution of $D_{50} = 0.4\mu$.[3]

TABLE 7.8-1. PARTICULATE EMISSION FACTORS FOR SECONDARY ALUMINUM OPERATIONS[a]

Operation	Uncontrolled		Baghouse		Electrostatic precipitator		Emission Factor Rating
	kg/Mg	lb/ton	kg/Mg	lb/ton	kg/Mg	lb/ton	
Sweating furnace[b]	7.25	14.5	1.65	3.3	-	-	C
Smelting							
Crucible furnace[b]	0.95	1.9	-	-	-	-	C
Reverberatory furnace[c]	2.15	4.3	0.65[e]	1.3[e]	0.65	1.3	B
Chlorination station[d]	500	1000	25	50	-	-	B

[a]Reference 2. Emission factors expressed as units per unit weight of metal processed. Factors apply only to Al metal recovery operations.
[b]Based on averages of two source tests.
[c]Based on averages of ten source tests. Standard deviation of uncontrolled emission factor is 17.5 kg/Mg (3.5 lb/ton), that of controlled factor is 0.15 kg/Mg (0.3 lb/ton).
[d]Expressed as kg/Mg (lb/ton) of chlorine used. Based on averages of ten source tests. Standard deviation of uncontrolled emission factor is 215 kg/Mg (430 lb/ton), of controlled factor, 18 kg/Mg (36 lb/ton).
[e]This factor may be lower if a coated baghouse is used.

Emissions from reverberatory (fluorine) smelting/refining are similar to those from reverberatory (chlorine) smelting/refining. The use of AlF_3 rather than chlorine in the demagging step reduces demagging emissions. Fluorides are emitted as gaseous fluorides (hydrogen fluoride, aluminum and magnesium fluoride vapors, and silicon tetrafluoride) or as dusts. Venturi scrubbers are usually used for fluoride emission control.

References for Section 7.8

1. W.M. Coltharp, et al., Multimedia Environmental Assessment of the Secondary Nonferrous Metal Industry, Draft Final Report, 2 vols., EPA Contract No. 68-02-1319, Radian Corporation, Austin, TX, June 1976.

2. W.F. Hammond and S.M. Weiss, Unpublished report on air contaminant emissions from metallurgical operations in Los Angeles County, Los Angeles County Air Pollution Control District, July 1964.

3. R.A. Baker, et al., Evaluation of a Coated Baghouse at a Secondary Aluminum Smelter, EPA Contract No. 68-02-1402, Environmental Science and Engineering, Inc., Gainesville, FL, October 1976.

4. Air Pollution Engineering Manual, 2d Edition, AP-40, U.S. Environmental Protection Agency, Research Triangle Park, NC, May 1973. Out of Print.

5. E.J. Petkus, "Precoated Baghouse Control for Secondary Aluminum Smelting", Presented at the 71st Annual Meeting of the Air Pollution Control Association, Houston, TX, June 1978.

7.9 SECONDARY COPPER SMELTING AND ALLOYING

7.9.1 Process Description[1,2]

The secondary copper industry processes scrap metals for the recovery of copper. Products include refined copper or copper alloys in forms such as ingots, wirebar, anodes, and shot. Copper alloys are combinations of copper with other materials, notably, tin, zinc, and lead. Also, for special applications, combinations include such metals as cobalt, manganese, iron, nickel, cadmium, and beryllium and nonmetals such as arsenic and silicon.

The principal processess involved in copper recovery are scrap metal pretreatment and smelting. Pretreatment includes cleaning and concentration to prepare the material for the smelting furnace. Smelting involves heating and treating the scrap to achieve separation and purification of specific metals.

The feed material used in the recovery process can be any metallic scrap containing a useful amount of copper, bronze (copper and tin), or brass (copper and zinc). Traditional forms are punchings, turnings and borings, defective or surplus goods, metallurgical residues such as slags, skimmings, and drosses, and obsolete, worn out, or damaged articles including automobile radiators, pipe, wire, bushings, and bearings.

The type and quality of the feed material determines the processes the smelter will use. Due to the large variety of possible feed materials available, the method of operation varies greatly between plants. Generally, a secondary copper facility deals with less pure raw materials and produces a more refined product, whereas brass and bronze alloy processors take cleaner scrap and do less purification and refining. Figure 7.9-1 is a flowsheet depicting the major processes that can be expected in a secondary copper smelting operation. A brass and bronze alloying operation is shown in Figure 7.9-2.

Pretreatment of the feed material can be accomplished using several different procedures, either separately or in combination. Feed scrap is concentrated by manual and mechanical methods such as sorting, stripping, shredding, and magnetic separation. Feed scrap is sometimes briquetted in a hydraulic press. Pyrometallurgical pretreatment may include sweating, burning of insulation (especially from wire scrap), and drying (burning off oil and volatiles) in rotary kilns. Hydrometallurgical methods include flotation and leaching, with chemical recovery.

In smelting, low-grade scrap is melted in a cupola furnace, producing "black copper" (70 to 80 percent Cu) and slag; these are often separated in a reverberatory furnace, from which the melt is transferred to a converter or electric furnace to produce "blister" copper, which is 90 to 99 percent Cu.

Blister copper may be poured to produce shot or castings, but is often further refined electrolytically or by fire refining. The fire-refining process is essentially the same as that described for the primary copper smelting industry (Section 7.3.1). The sequence of events in fire-refining is (1) charging, (2) melting in an oxidizing atmosphere, (3) skimming the slag, (4) blowing with air or oxygen, (5) adding fluxes, (6) "poling" or otherwise providing a reducing atmosphere, (7) reskimming, and (8) pouring.

To produce bronze or brass rather than copper, an alloying operation is required. Clean, selected bronze and brass scrap is charged to a melting furnace with alloys to bring the resulting mixture to the desired final composition. Fluxes are added to remove impurities and to protect the melt against oxidation by air. Air or oxygen may be blown through the melt to adjust the composition by oxidizing excess zinc.

With zinc-rich feed such as brass, the zinc oxide concentration in the exhaust gas is sometimes high enough to make recovery for its metal value desirable. This process is accomplished by vaporizing the zinc from the melt at high temperature and capturing the oxide downstream in a process baghouse.

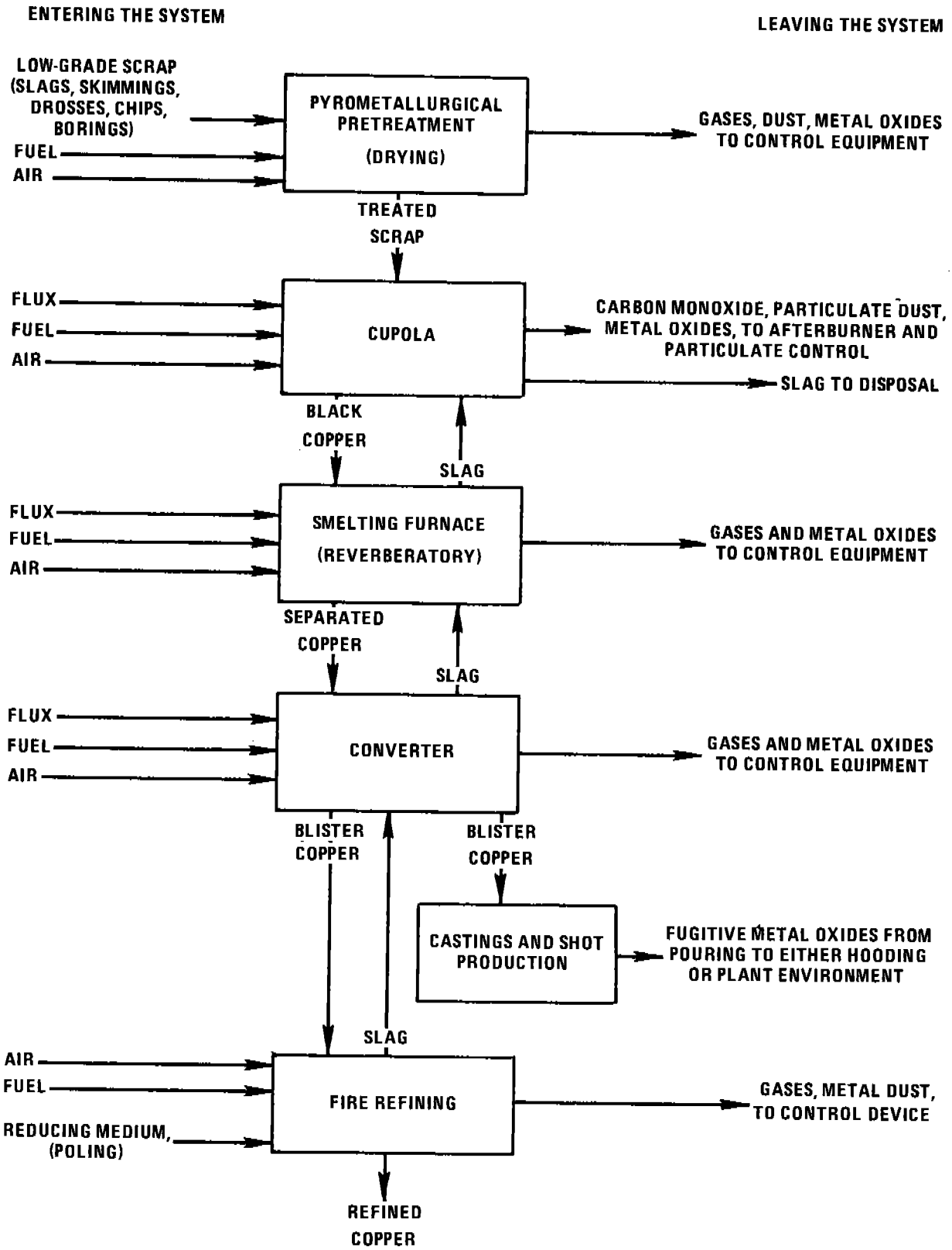

7.9-1. Low-grade copper recovery.

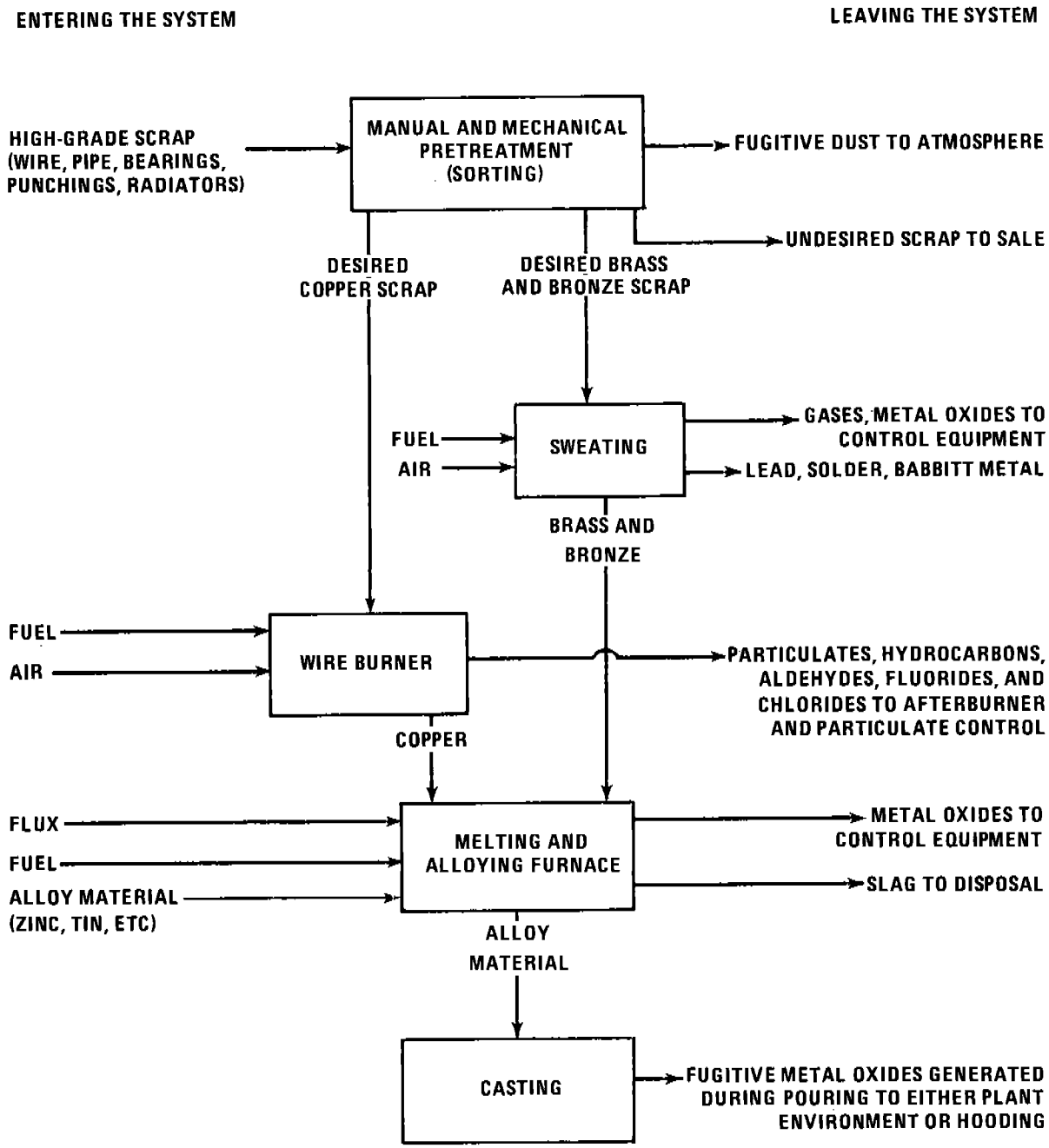

7.9-2. High-grade brass and bronze alloying.

The final step is always casting of the suitably alloyed or refined metal into a desired form, i.e, shot, wirebar, anodes, cathodes, ingots, or other cast shapes. The metal from the melt is usually poured into a ladle or a small pot, which serves the functions of a surge hopper and a flow regulator, then into a mold.

7.9.2 Emissions and Controls

The principal pollutants emitted from secondary copper smelting activities are particulate matter in various forms. Removal of insulation from wire by burning causes particulate emissions of metal oxides and unburned insulation. Drying of chips and borings to remove excess oils and cutting fluids can cause discharges of large amounts of dense smoke consisting of soot and unburned hydrocarbons. Particulate emissions from the top of a cupola furnace consist of metal oxide fumes, dirt, and dust from limestone and coke.

The smelting process utilizes large volumes of air to oxidize sulfides, zinc, and other undesirable constituents of the feed. This procedure generates much particulate matter in the exit gas stream. The wide variation among furnace types, charge types, quality, extent of pretreatment, and size of charge is reflected in a broad spectrum of particle sizes and variable grain loadings in the escaping gases. One major factor contributing to differences in emission rates is the amount of zinc present in scrap feed materials; the low-boiling zinc evaporates and combines with air oxygen to give copious fumes of zinc oxide.

Metal oxide fumes from furnaces used in secondary smelters have been controlled by baghouses, electrostatic precipitators, or wet scrubbers. Efficiency of control by baghouses may be better than 99 percent, but cooling systems are needed to prevent the hot exhaust gases from damaging or destroying the bag filters. A two-stage system employing both water jacketing and radiant cooling is common. Electrostatic precipitators are not as well suited to this application, having a low collection efficiency for dense particulates such as oxides of lead and zinc. Wet scrubber installations are also relatively ineffective in the secondary copper industry. Scrubbers are useful mainly for particles larger than 1 micron, (μm) but the metal oxide fumes generated are generally submicron in size.

Particulate emissions associated with drying kilns can be similarly controlled. Drying temperatures up to 150° C (300° F) produce relatively cool exhaust gases, requiring no precooling for control by baghouses.

Wire burning generates much particulate matter, largely unburned combustibles. These emissions can be effectively controlled by direct-flame afterburners, with an efficiency of 90 percent or better if the afterburner combustion temperature is maintained above 1000° C (1800° F). If the insulation contains chlorinated organics such as polyvinyl chloride, hydrogen chloride gas will be generated and will not be controlled by the afterburner.

One source of fugitive emissions in secondary smelter operations is charging of scrap into furnaces containing molten metals. This often occurs when the scrap being processed is not sufficiently compact to allow a full charge to fit into the furnace prior to heating. The introduction of additional material onto the liquid metal surface produces significant amounts of volatile and combustible materials and smoke, which can escape through the charging door. Briquetting the charge offers a possible means of avoiding the necessity of such fractional charges. When fractional charging cannot be eliminated, fugitive emissions are reduced by turning off the furnace burners during charging. This reduces the flow of exhaust gases and enhances the ability of the exhaust control system to handle the emissions.

Metal oxide fumes are generated not only during melting, but also during pouring of the molten metal into the molds. Other dusts may be generated by the charcoal, or other lining, used in association with the mold. Covering the metal surface with ground charcoal is a method used to make "smooth-top" ingots. This process creates a shower or sparks, releasing emissions into the plant environment at the vicinity of the furnace top and the molds being filled.

Emission factor averages and ranges for six different types of furnaces are presented in Table 7.9-1.

TABLE 7.9-1. PARTICULATE EMISSION FACTORS FOR FURNACES USED IN SECONDARY COPPER SMELTING AND ALLOYING PROCESSES[a,b]

EMISSION FACTOR RATING: B

Furnace and charge type	Control equipment	Particulate kg/Mg average	Particulate kg/Mg range	Particulate lb/ton average	Particulate lb/ton range	Lead[d] kg/Mg	Lead[d] lb/ton
Cupola							
Scrap iron	None	0.002	-	0.003	-	-	-
Insulated copper wire	None	120	-	230	-	-	-
	ESP[c]	5	-	10	-	-	-
Scrap copper and brass	None	35	30-40	70	60-80	-	-
	ESP	1.2	1-1.4	2.4	2-2.8	-	-
Reverberatory							
High lead alloy (58% Lead	None	-	-	-	-	25	50
Red/yellow brass (15% Lead	None	-	-	-	-	6.6	13.2
Other alloys (7% lead)	None	-	-	-	-	2.5	5.0
Copper	None	2.6	0.4-15	5.1	0.8-30	-	-
	Baghouse	0.2	0.1-0.3	0.4	0.3-0.6	-	-
Brass and bronze	None	18	0.3-35	36	0.6-70	-	-
	Baghouse	1.3	0.3-2.5	2.6	0.6-5	-	-
Rotary							
Brass and bronze	None	150	50-250	300	100-500	-	-
	ESP	7	3-10	13	6-19	-	-
Crucible and pot							
Brass and bronze	None	11	1-20	21	2-40	-	-
	ESP	0.5	3-10	1	6-19	-	-
Electric Arc							
Copper	None	2.5	1-4	5	2-8	-	-
	Baghouse	0.5	0.02-1	1	0.04-2	-	-
Brass and bronze	None	5.5	2-9	11	4-18	-	-
	Baghouse	3	-	6	-	-	-
Electric induction							
Copper	None	3.5	-	7	-	-	-
	Baghouse	0.25	-	0.5	-	-	-
Brass and bronze	None	10	0.3-20	20	0.5-40	-	-
	Baghouse	0.35	0.01-0.65	0.7	0.01-1.3	-	-

[a]Factors for high lead alloy (58 percent lead), red and yellow brass (15 percent lead), and other alloys (7 percent lead) produced in the reverberatory furnace are based on unit weight produced. All other factors given in terms of raw materials charged to unit. Dash indicates no available information.

[b]The information for particulate in Table 7.9-1 was based on unpublished data furnished by the following:

Philadelphia Air Management Services, Philadelphia, PA.
New Jersey Department of Environmental Protection, Trenton, NJ.
New Jersey Department of Environmental Protection, Metro Field Office, Springfield, NJ.
New Jersey Department of Environmental Protection, Newark Field Office, Newark, NJ.
New York State Department of Environmental Conservation, New York, NY.
The City of New York Department of Air Resources, New York, NY.
Cook County Department of Environmental Control, Maywood, IL.
Wayne County Department of Health, Air Pollution Control Division, Detroit, MI.
City of Cleveland Department of Public Health and Welfare, Division of Air Pollution Control, Cleveland, OH.
State of Ohio Environmental Protection Agency, Columbus, OH.
City of Chicago Department of Environmental Control, Chicago, IL.
South Coast Air Quality Management District, Los Angeles, CA.

[c]ESP equals electrostatic precipitator.

[d]References 1, 5-6.

References for Section 7.9

1. Air Pollution Aspects of Brass and Bronze Smelting and Refining Industry, U.S. Department of Health, Education and Welfare, National Air Pollution Control Administration, Raleigh, NC, Publication No. AP-58, November 1969.

2. J. A. Danielson (ed.), Air Pollution Engineering Manual (2nd Ed.), AP-40, U.S. Environmental Protection Agency, Research Triangle Park, NC, 1973. Out of Print.

3. Emission Factors and Emission Source Information for Primary and Secondary Copper Smelters, U.S. Environmental Protection Agency, Research Triangle Park, NC, Publication No. EPA-450/3-77-051, December 1977.

4. Control Techniques for Lead Air Emissions, EPA-450-2/77-012, U.S. Environmental Protection Agency, Research Triangle Park, NC, December 1977.

5. H. H. Fukubayashi, et al., Recovery of Zinc and Lead from Brass Smelter Dust, Report of Investigation No. 7880, Bureau of Mines, U.S. Department of the Interior, Washington, DC, 1974.

6. "Air Pollution Control in the Secondary Metal Industry", Presented at the First Annual National Association of Secondary Materials Industries Air Pollution Control Workshop, Pittsburgh, PA, June 1967.

7.10 GRAY IRON FOUNDRIES

7.10.1 General[1]

Gray iron foundries produce gray iron castings by melting, alloying and molding pig iron and scrap iron. The process flow diagram of a typical gray iron foundry is presented in Figure 7.10-1. The four major processing operations of the typical gray iron foundry are raw materials handling, metal melting, mold and core production, and casting and finishing.

Raw Materials Handling - The raw material handling operations include the receiving, unloading, storage and conveying of all raw materials for the foundry. The raw materials used by gray iron foundries are pig iron, iron and steel scrap, foundry returns, metal turnings, alloys, carbon additives, coke, fluxes (limestone, soda ash, fluorspar, calcium carbide), sand, sand additives, and binders. These raw materials are received in ships, railcars, trucks and containers, transferred by truck, loaders and conveyers to both open piles and enclosed storage areas, and then transferred by similar means from storage to the processes.

Metal Melting - Generally the first step in the metal melting operations is scrap preparation. Since scrap is normally purchased in the proper size for furnace feed, scrap preparation primarily consists of scrap degreasing. This is very important for electric induction furnaces, as organics on scrap can cause an explosion. Scrap may be degreased with solvents, by centrifugation or by combustion in an incinerator or heater, or it may be charged without treatment, as is often the case with cupola furnaces. After preparation, the scrap, iron, alloy and flux are weighed and charged to the furnace.

The cupola furnace is the major type of furnace used in the gray iron industry today. It is typically a vertical refractory lined cylindrical steel shell, charged at the top with alternate layers of metal, coke and flux. Larger cupolas are water cooled instead of refractory lined. Air introduced at the bottom of the cupola burns the coke to melt the metal charge. Typical melting capacities range from 0.5 to 14 Mg (1 - 27 tons) per hour, with a few larger units approaching 50 Mg (100 tons) per hour. Cupolas can be tapped either continuously or intermittently from a side tap hole at the bottom of the furnace.

Electric arc furnaces, used to a lesser degree in the gray iron industry, are large refractory lined steel pots fitted with a refractory lined roof through which three graphite electrodes are inserted. The metal charge is heated to melting by electrical arcs produced by the current flowing between the electrodes and the charge. Electric arc furnaces are charged with raw material through the removed lid, by a chute through the lid, or through a door in

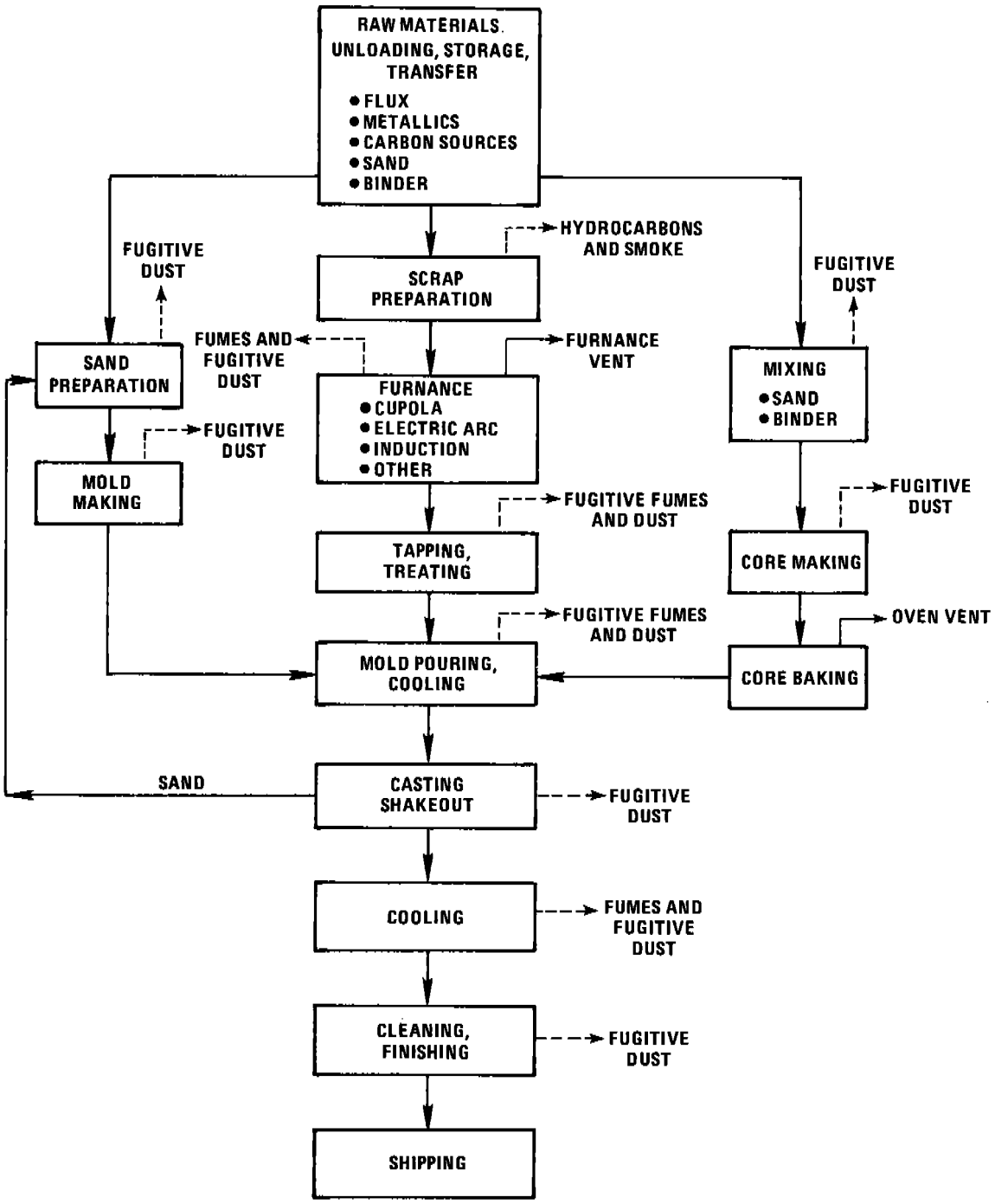

Figure 7.10-1. Typical flow diagram of a grey iron foundry.

the side. The molten metal is tapped by tilting and pouring through a hole in the side. Melting capacities range up to 10 Mg (20 tons) per hour.

A third furnace type used in the gray iron industry is the electric induction furnace. Induction furnaces are vertical refractory lined cylinders surrounded by electrical coils energized with alternating current. The resulting fluctuating magnetic field heats the metal. Induction furnaces are kept closed except when charging, skimming and tapping. The molten metal is tapped by tilting and pouring through a hole in the side. Induction furnaces are also used with other furnaces to hold and superheat the charge after melting and refining in another furnace.

A small percentage of melting in the gray iron industry is also done in air furnaces, reverberatory furnaces, pot furnaces and indirect arc furnaces.

The basic melting process operations are 1) furnace charging, in which the metal, scrap, alloys, carbon and flux are added to the furnace, 2) melting, during which the furnace remains closed, 3) backcharging, which involves the addition of more metal and, possibly, alloys, 4) refining and treating, during which the chemistry is adjusted, 5) slag removing, and 6) tapping molten metal into a ladle or directly into molds.

Mold and Core Production - Cores are molded sand shapes used to make the internal voids in castings, and molds are forms used to shape the exterior of castings. Cores are made by mixing sand with organic binders, molding the sand into a core, and baking the core in an oven. Molds are prepared by using a mixture of wet sand, clay and organic additives to make the mold shapes, and then by drying with hot air. Increasingly, cold setting binders are being used in both core and mold production. Used sand from shakeout operations is recycled to the sand preparation area to be cleaned, screened and reused to make molds.

Casting and Finishing - When the melting process is complete, the molten metal is tapped and poured into a ladle. At this point, the molten metal may be treated by addition of magnesium to produce ductile iron by the addition of soda ash or lime to remove sulfur. At times, graphite may be innoculated to adjust carbon levels. The treated molten metal is then poured into molds and allowed partially to cool. The partially cooled castings are placed on a vibrating grid where the mold and core sand is shaken away from the casting. The sand is returned to the mold manufacturing process, and the castings are allowed to cool further in a cooling tunnel.

In the cleaning and finishing process, burrs, risers and gates are broken off or ground off to match the contours of the castings, after which the castings are shot blasted to remove remaining mold sand and scale.

TABLE 7.10-1. EMISSION FACTORS FOR GRAY IRON FURNACES[a]

EMISSION FACTOR RATING: B

Furnace Type	Particulates		Carbon Monoxide		Sulfur Dioxide		Nitrogen Oxides		VOC		Lead[b]	
	kg/Mg	lb/ton	kg/Mg	lb/ton	kg/Mg	lb/ton	kg/Mg	lb/ton	kg/Mg	lb/ton	kg/Mg	lb/ton
Cupola[c,d]												
Uncontrolled	8.5 (3-17)[e]	17 (5-34)[e]	145[f]	73[f]	0.6S[g]	1.25S[g]	-	-	-	-	0.05-0.6	0.1-1.1
Wet cap	4	8	-	-	-	-	-	-	-	-	-	-
Impingement scrubber	2.5	5	-	-	-	-	-	-	-	-	-	-
High energy scrubber	0.4	0.8	-	-	0.3S[g]	0.6S[g]	-	-	-	-	-	-
Electrostatic precipitator	0.3	0.6	-	-	-	-	-	-	-	-	-	-
Bag filter	0.1	0.2	-	-	-	-	-	-	-	-	-	-
Electric Arc[h]	5 (3-10)[e]	10 (5-20)[e]	0.5-19	1-37	neg	neg	.02-.3	.04-.6	.03-.15	.06-.3	-	-
Electric Induction[c]	0.75	1.5	neg	neg	neg	neg	-	-	-	-	.005-.05	.009-0.1
Reverberatory[c]	1	2	-	-	-	-	-	-	-	-	.006-.07	.012-0.14

[a]Expressed as weight of pollutant per weight of gray iron produced. Neg = negligible.
[b]References 4 and 9-12.
[c]References 2-5.
[d]Approximately 85% of the total charge is metal. For every unit weight of coke in the charge, 7 units of gray iron are produced.
[e]Values in parentheses represent the range of expected values.
[f]Reference 6.
[g]Reference 1. S represents % sulfur in the coke. This factor assumes 30% of the sulfur is converted to SO_2.
[h]References 1 and 8.

TABLE 7.10-2. EMISSION FACTORS FOR FUGITIVE PARTICULATES FROM GRAY IRON FOUNDRIES[a]

EMISSION FACTOR RATING: D

Process	Emissions kg/Mg	Emissions lb/ton	Emitted to Work Environment kg/Mg	Emitted to Work Environment lb/ton	Emitted to Atmosphere kg/Mg	Emitted to Atmosphere lb/ton
Scrap and Charge Handling, Heating[b]	0.3	0.6	0.25	0.5	0.1	0.2
Magnesium Treatment[b]	2.5	5	2.5	5	0.5	1
Innoculation[c]	1.5 - 2.5	3 - 5	-	-	-	-
Pouring[b]	2.5	5	2.5	5	1	2
Cooling[b]	5	10	4.5	9	0.5	1
Shakeout[b]	16	32	6.5	13	0.5	1
Cleaning, Finishing[b]	8.5	17	0.15	0.3	0.05	0.1
Sand Handling, Preparation, Mulling[b]	20	40	13	26	1.5	3
Core Making, Baking[b]	0.6	1.1	0.6	1.1	0.6	1.1

[a]Expressed as weight of pollutant per weight of metal melted.
[b]Reference 1, p. III-13.
[c]Reference 7, p. 2-83.

7.10.2 Emissions and Controls[1]

Emissions from the raw materials handling operations consist of fugitive particulates generated from the receiving, unloading, storage and conveying of all raw materials for the foundry. These emissions are controlled by enclosing the major emission points and routing the air from the enclosures through fabric filters or wet collectors.

Scrap preparation using heat will emit smoke, organics and carbon monoxide, and preparation using solvent degreasers will emit organics. (See Section 4.6, Solvent Degreasing.) Catalytic incinerators and afterburners can be applied to control about 95 percent of the organics and carbon monoxide.

Emissions from melting furnaces consist of particulates, carbon monoxide, organics, sulfur dioxide, nitrogen oxides and small quantities of chlorides and fluorides. The particulates, chlorides and fluorides are generated by flux, incomplete combustion of coke, carbon additives, and dirt and scale on the scrap charge. Organics on the scrap and the reactivity of the coke effect carbon monoxide emissions. Sulfur dioxide emissions, characteristic of cupola furnaces, are attributable to sulfur in the coke.

The highest concentration of furnace emissions occurs during charging, backcharging, alloying, slag removal, and tapping operations, when the furnace lids and doors are opened. Generally, these emissions have escaped into the furnace building and have been vented through roof vents. Controls for emissions during the melting and refining operations usually concern venting the furnace gases and fumes directly to a collection and control system. Controls for fugitive furnace emissions involve the use of roof hoods or special hoods in the proximity of the furnace doors, and of tapping ladles to capture emissions and to route them to emission control systems.

High energy scrubbers and bag filters with respective efficiencies greater than 95 percent and 98 percent are used to control particulate emissions from cupolas and electric arc furnaces in the U.S. Afterburners achieving 95 percent control are used for reducing organics and carbon monoxide emissions from cupolas. Normally, induction furnaces are uncontrolled.

The major pollutants from mold and core production are particulates from sand reclaiming, sand preparation, sand mixing with binders and additives, and mold and core forming. There are organics, CO and particulate emissions from core baking, and organic emissions from mold drying. Bag filters and high energy scrubbers can be used to control particulates from mold and core production. Afterburners and catalytic incinerators can be used to control organics and carbon monoxide emissions.

TABLE 7.10-3. SIZE DISTRIBUTION FOR PARTICULATE EMISSIONS FROM THREE ELECTRIC ARC FURNACE INSTALLATIONS[a]

Particle Size (μ)	Foundry A	Foundry B	Foundry C
<1	5	8	18
<2	15	54	61
<5	28	80	84
<10	41	89	91
<15	55	93	94
<20	68	96	96
<50	98	99	99

[a]Reference 1, p. III-39.

TABLE 7.10-4. SIZE DISTRIBUTION FOR PARTICULATE EMISSIONS FROM EIGHTEEN CUPOLA FURNACE INSTALLATIONS[a]

Particle Size (μ)	Cumulative % Less Than Indicated Size
<2	14
<5	24
<10	34
<20	44
<50	61
<100	78
<200	93

[a]Reference 1, p. III-33.

In the casting operations, large quantities of particulates can be generated in the treating and innoculation steps before pouring. Emissions from pouring consist of fumes, carbon monoxide, organics, and particulates evolved from the mold and core materials when contacted with molten iron. These emissions continue to evolve as the mold cools. A significant quantity of particulate emissions is also generated during the casting shakeout operation. Particulate emissions from shakeout can be controlled by either high energy scrubbers or bag filters. Emissions from pouring are normally uncontrolled or are ducted into other exhaust streams.

Emissions from finishing operations are of large particulates emitted during the removal of burrs, risers and gates, and during the blasting process. Particulates from finishing operations are usually large in size and are easily controlled by cyclones.

Emission factors for melting furnaces are presented in Table 7.10-1, and emission factors for fugitive particulates are presented in Table 7.10-2. Typical particle size distributions for emissions from electric arc and cupola furnaces are presented in Table 7.10-3 and Table 7.10-4.

References for Section 7.10

1. J.A. Davis, et al., Screening Study on Cupolas and Electric Furnaces in Gray Iron Foundries, EPA Contract No. 68-01-0611, Battelle Laboratories, Columbus, OH, August 1975.

2. W.F. Hammond and S.M. Weiss, "Air Contaminant Emissions from Metallurgical Operations in Los Angeles County", Presented at Air Pollution Control Institute, Los Angeles, CA, July 1964.

3. H.R. Crabaugh, et al., "Dust and Fumes from Gray Iron Cupolas: How They Are Controlled in Los Angeles County", Air Repair, 4(3): 125-130, November 1954.

4. Air Pollution Engineering Manual, Second Edition, AP-40, U.S. Environmental Protection Agency, Research Triangle Park, NC, May 1973. Out of Print.

5. J.M. Kane, "Equipment for Cupola Control", American Foundryman's Society Transactions, 64:525-531, 1956.

6. Air Pollution Aspects of the Iron Foundry Industry, APTD-0806, U.S. Environmental Protection Agency, Research Triangle Park, NC, February 1971.

7. John Zoller, et al., Assessment of Fugitive Particulate Emission Factors for Industrial Processes, EPA-450/3-78-107, U.S. Environmental Protection Agency, Research Triangle Park, NC, September 1978.

8. P.F. Fennelly and P.D. Spawn, Air Pollutant Control Techniques for Electric Arc Furnaces in the Iron and Steel Foundry Industry, EPA 450/2-78-024, U.S. Environmental Protection Agency, Research Triangle Park, NC, June 1978.

9. Control Techniques for Lead Air Emissions, Volumes 1 and 2, EPA-450/2-77-012, U.S. Environmental Protection Agency, Research Triangle Park, NC, December 1977.

10. W.E. Davis, Emissions Study of Industrial Sources of Lead Air Pollutants, 1970, APTD-1543, U.S. Environmental Protection Agency, Research Triangle Park, NC, April 1973.

11. Emission Test No. 71-CI-27, Office of Air Quality Planning and Standards, U.S. Environmental Protection Agency, Research Triangle Park, NC, February 1972.

12. Emission Test No. 71-CI-30, Office of Air Quality Planning and Standards, U.S. Environmental Protection Agency, Research Triangle Park, NC, March 1972.

7.11 SECONDARY LEAD PROCESSING

7.11.1 Process Description [1-7]

The secondary lead industry processes a variety of leadbearing scrap and residue to produce lead and lead alloy ingots, battery lead oxide, and lead pigments (Pb_3O_4 and PbO). Processing may involve scrap pretreatment, smelting and refining/casting. Processes typically used in each operation are shown in Figure 7.11-1.

7.11.1.1 Scrap pretreatment is the partial removal of metal and nonmetal contaminants from leadbearing scrap and residue. Processes used for scrap pretreatment include battery breaking, crushing and sweating. Battery breaking is the draining and crushing of batteries followed by manual screening to separate the lead from nonmetallic materials. This separated lead scrap is then mixed with other scraps and smelted in reverberatory or blast furnaces. Oversize pieces of scrap and residues are usually crushed by jaw crushers. Sweating separates lead from high-melting metals in direct gas or oil fired rotary or reverberatory furnaces. Rotary furnaces are typically used to process low lead content scrap and residue, while reverberatory furnaces are used to process high lead content scrap. The partially purified lead is periodically tapped for further processing in smelting furnaces or pot furnaces.

7.11.1.2 Smelting is the production of purified lead by melting and separating lead from metal and nonmetallic contaminants and by reducing oxides to elemental lead. Reverberatory smelting furnaces are used to produce a semisoft lead product that typically contains 3-4 percent antimony. Blast furnaces produce hard or antimonial lead containing about 10 percent antimony.

A reverberatory furnace produces semisoft lead from a charge of lead scrap, metallic battery parts, oxides, drosses and other residues. The furnace consists of a rectangular shell lined with refractory brick and fired directly with oil or gas to a temperature of 2300°F (1250°C). The material to be melted is heated by direct contact with combustion gases. The furnace can process about 50 tons per day (45 MT/day). About 47 percent of the charge is typically recovered as lead product and is periodically tapped into molds or holding pots. Forty-six percent of the charge is removed as slag and subsequently processed in blast furnaces. The remaining 7 percent of the furnace charge escapes as dust or fume.

Blast furnaces produce hard lead from charges containing siliceous slag from previous runs (typically about 4.5 percent of the charge), scrap iron (about 4.5 percent), limestone (about 3 percent), coke (about 5.5 percent), and oxides, pot furnace refining drosses, and reverberatory slag (comprising the remaining 82.5 percent of the charge). The proportions of rerun slags, limestone and coke vary respectively to as high as 8 percent, 10 percent, and 8 percent of the charge. Processing capacity of the blast furnace ranges from 20 - 80 tons per day (18 - 73 MT/day).

Similar to iron cupolas, the furnaces consist of vertical steel cylinders lined with refractory brick. Combustion air at 0.5 - 0.75 psig is introduced at the bottom of the furnace through tuyeres. Some of the coke combusts to melt the charge, while the remainder reduces lead oxides to elemental lead. The furnace exhausts at temperatures of 1200 - 1350°F (650 - 730°C).

As the lead charge melts, limestone and iron float to the top of the molten bath and form a flux that retards oxidation of the product lead. The molten lead flows from the furnace into a holding pot at a nearly continuous rate. The product lead constitutes roughly 70 percent of the charge. From the holding pot, the lead is usually cast into large ingots, called pigs or sows.

About 18 percent of the charge is recovered as slag, with about 60 percent of this being a sulfurous slag called matte. Roughly 5 percent of the charge is retained for reuse, and the remaining 7 percent of the charge escapes as dust or fume.

7.11.1.3 Refining/casting is the use of kettle type furnaces in remelting, alloying, refining and oxidizing processes. Materials charged for remelting are usually lead alloy ingots which require no further processing before casting. The furnaces used for alloying, refining and oxidizing are usually gas fired, and operating temperatures range from 700 - 900°F (375 - 485°C).

Alloying furnaces simply melt and mix ingots of lead and alloy material. Antimony, tin, arsenic, copper and nickel are the most common alloying materials.

Refining furnaces remove copper and antimony to produce soft lead, and they remove arsenic, copper and nickel to produce hard lead. Sulfur may be added to the molten lead bath to remove copper. Copper sulfide skimmed off as dross may subsequently be processed in a blast furnace to recover residual lead. Aluminum chloride flux may be used to remove copper, antimony and nickel. The antimony content can be reduced to about 0.02 percent by bubbling air through the molten lead. Residual antimony can be removed by adding sodium nitrate and sodium hydroxide to the bath and skimming off the resulting dross. Dry drossing consists of adding sawdust to the agitated mass of molten metal. The sawdust supplies carbon to help separate globules of lead suspended in the dross and to reduce some of the lead oxide to elemental lead.

Oxidizing furnaces are either kettle or reverberatory furnaces which oxidize lead and entrain the product lead oxides in the combustion air stream. The product is subsequently recovered in baghouses at high efficiency.

7.11.2 Emissions and Controls [1,4,5]

Emission factors for uncontrolled processes and fugitive particulate emissions are in Tables 7.11-1 and 7.11-2, respectively.

Reverberatory and blast furnaces account for about 88 percent of the total lead emissions from the secondary lead industry. Most of the remaining processes are small emission sources with undefined emission characteristics.

Emissions from battery breaking mainly consist of sulfuric acid mist and dusts containing dirt, battery case material and lead compounds. Emissions from crushing are also mainly dusts.

Emissions from sweating operations consist of fume, dust, soot particulates and combustion products, including sulfur dioxide. The sulfur dioxide emissions are from the combustion of sulfur compounds in the scrap and fuel. Dusts range in size from 5 - 20 μm, while unagglomerated lead fumes range in size from 0.07 - 0.4 μm, with an average diameter of 0.3 μm. Particulate loadings in the stack gas from reverberatory sweating range from 1.4 - 4.5 grains per cubic foot (3.2 - 10.3 g/m^3). Baghouses usually control sweating emissions, with removal efficiencies exceeding 99 percent. The emission factors for lead sweating in Table 7.11-1 are based on measurements at similar sweating furnaces in other secondary metals processing industries, and are not based on measurements at lead sweating furnaces.

Reverberatory smelting furnaces emit particulates and oxides of sulfur and nitrogen. Particulates consist of oxides, sulfides and sulfates of lead, antimony, arsenic, copper and tin, as well as unagglomerated lead fume. Particulate loadings range from 7 - 22 grains per cubic foot (16 - 50 g/m^3). Emissions are generally controlled with settling and cooling chambers followed by a baghouse. Control efficiencies generally exceed 99 percent, as shown in Table 7.11-3. Wet scrubbers are sometimes used to reduce sulfur dioxide emissions. However, because of the small particles emitted, scrubbers are not as widely used as baghouses for particulate control.

Two chemical analyses by electron spectroscopy showed the particulates to consist of 38 - 42 percent lead, 20 - 30 percent tin, and about 1 percent zinc.[16] Typically, particulates from reverberatory smelting furnaces comprise about 20 percent lead.

Emissions from blast furnaces occur at charging doors, the slag tap, the lead well, and the furnace stack. The emissions are combustion gases (including carbon monoxide, hydrocarbons, and oxides of sulfur and nitrogen) and particulates. Emissions from the charging doors and the slag tap are hooded and routed to the devices treating the furnace stack emissions. Reverberatory furnace particulates are larger than those emitted from blast furnaces and are thus suitable for control by scrubbers

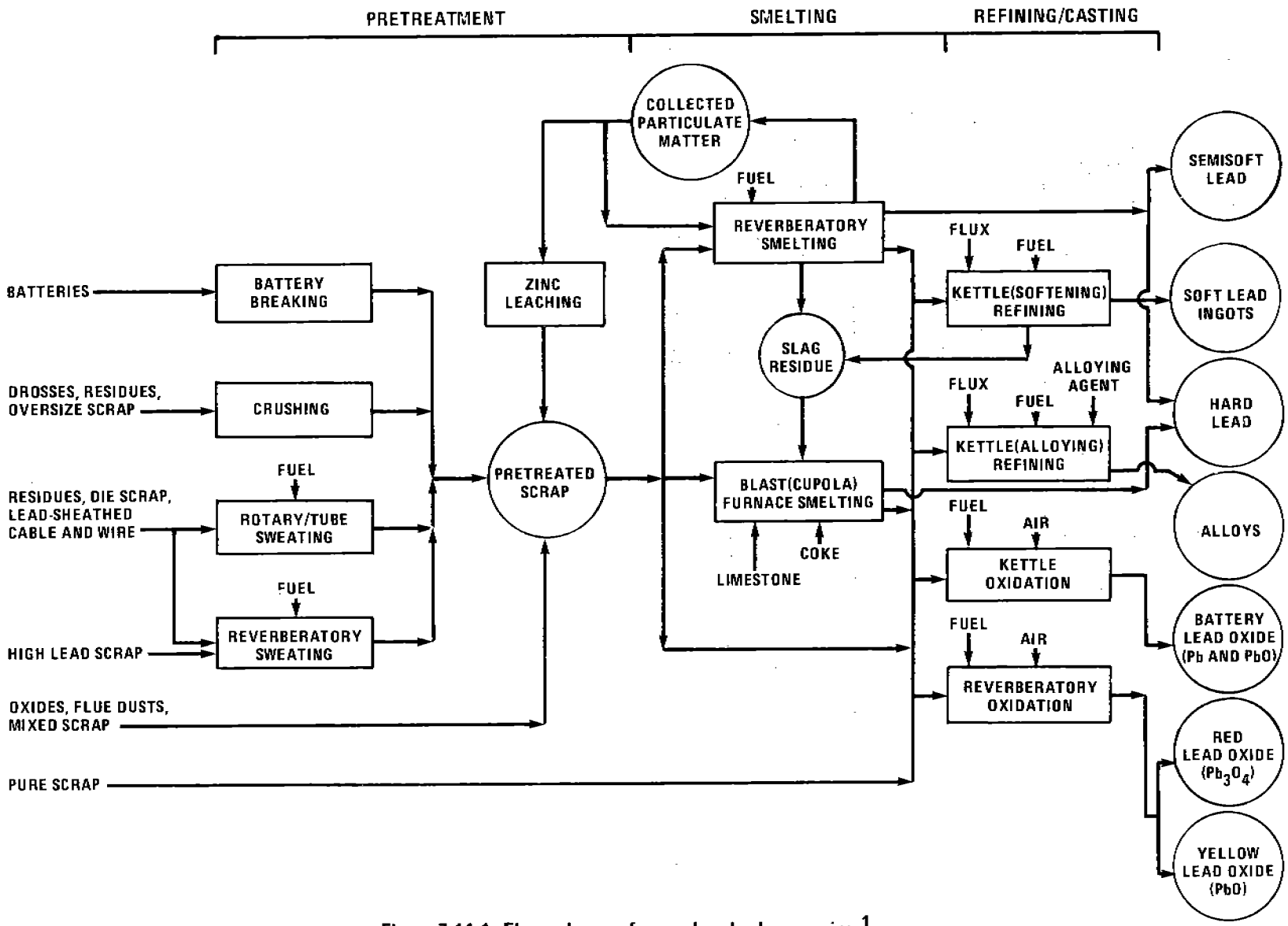

Figure 7.11-1. Flow scheme of secondary lead processing.[1]

Table 7.11-2. FUGITIVE EMISSION FACTORS FOR SECONDARY LEAD PROCESSING

EMISSION FACTOR RATING: E

Source	Particulates[a]		Lead[b]	
	lb/ton	kg/MT	lb/ton	kg/MT
Sweating	1.6 - 3.5	0.8 - 1.8	0.4 - 1.8	0.2 - 0.4
Smelting	2.8 - 15.7	1.4 - 7.9	0.6 - 3.6	0.3 - 1.8
Kettle Refining	0.04	0.02	0.01	0.005
Casting[c]	0.88	0.44	0.2	0.1

[a]Based on an engineering estimate that fugitive emissions equal 5% of the uncontrolled stack emissions. All factors except that for casting are based on the amount of charge to the process. The casting factor is based on the amount of lead cast. Reference 14.

[b]Factors are based on an approximation that particulate emissions contain 23% lead. References 3 and 5.

[c]Factors based on limited tests of a roof monitor over casting operations at a primary smelter.

or fabric filters downstream of coolers. Efficiencies for various control devices are shown in Table 7.11-3. In one application, fabric filters alone captured over 99 percent of the blast furnace particulate emissions.

Table 7.11-3. EFFICIENCIES OF PARTICULATE CONTROL EQUIPMENT ASSOCIATED WITH SECONDARY LEAD SMELTING FURNACES

Control device	Furnace type	Particulate control efficiency, %
Fabric filter[a]	Blast	98.4
	Reverberatory	99.2
Dry cyclone plus fabric filter[a]	Blast	99.0
Wet cyclone plus fabric filter[b]	Reverberatory	99.7
Settling chamber plus dry cyclone plus fabric filter[c]	Reverberatory	99.8
Venturi scrubber plus demister[d]	Blast	99.3

[a] Reference 8.
[b] Reference 9.
[c] Reference 10.
[d] Reference 12.

The size distribution for blast furnace particulates recovered by an efficient fabric filter is reported in Table 7.11-4. Particulates recovered from another blast furnace contained about 80 - 85 percent lead sulfate and lead chloride, 4 percent tin, 1 percent cadmium, 1 percent zinc, 0.5 percent each antimony and arsenic, and less than 1 percent organic matter.[17]

Kettle furnaces for melting, refining and alloying are relatively minor emission sources. The kettles are hooded, with fumes and dusts typically vented to baghouses and recovered with efficiencies exceeding 99 percent. Twenty measurements of the uncontrolled particulates from kettle furnaces showed a mass median aerodynamic particle diameter of 18.9 μm, with particle size ranging from 0.05 - 150 μm. Three chemical analyses by electron spectroscopy showed the composition of particulates to vary from 12 - 17 percent lead, 5 - 17 percent tin, and 0.9 - 5.7 percent zinc.[16]

Emissions from oxidizing furnaces are economically recovered with baghouses. The particulates are mostly lead oxide, but they also contain amounts of lead and other metals. The oxides range in size from 0.2 - 0.5 μm. Controlled emissions have been reported to be as low as 0.2 - 2.8 pounds per ton (0.1 - 1.4 kg/MT).

Table 7.11-1. EMISSION FACTORS FOR SECONDARY LEAD PROCESSING[a]

Source	Particulates lb/ton	Particulates kg/MT	Lead lb/ton	Lead kg/MT	Sulfur Dioxide lb/ton	Sulfur Dioxide kg/MT	Emission Factor Rating
Battery breaking[b]	NA	NA	NA	NA	NA	NA	---
Crushing[b]	NA	NA	NA	NA	NA	NA	---
Sweating[b]	32-70	16-35	7-16[c]	4-8[c]	NA	NA	E
Leaching[b]	Neg	Neg	Neg	Neg	Neg	Neg	---
Smelting[d]							
Reverberatory	147 (56-313)[e]	74 (28-157)[e]	34 (13-72)[c]	17 (6-36)[c]	80 (71-88)[e]	40 (36-44)[e]	B
Blast (cupola)[d]	193 (21-381)[f]	97 (11-191)[f]	44 (5-88)[c]	22 (2-44)[c]	53 (18-110)[f]	27 (9-55)[f]	B
Kettle refining	0.8[g]	0.4[g]	0.2[c]	0.1[c]	NA	NA	B
Oxidation[h]							
Kettle	<40[i]	<20[i]	NA	NA	NA	NA	E
Reverberatory	NA	NA	NA	NA	NA	NA	---

[a] All emission factors are based on the quantity of material charged to the furnace (except particulate kettle oxidation).
[b] NA = data not available. Neg = negligible.
[c] Reference 1.
[d] Emission factor rating of E. Emission factors for lead emissions are based on an approximation that particulate emissions contain 23% lead. References 3 and 5.
[e] Numbers in parentheses represent ranges of values obtained.
[f] References 8 - 11.
[g] References 11 - 13.
[h] Reference 11.
[i] References 1 and 2.
Essentially all of the product lead oxide is entrained in an air stream and subsequently recovered by a baghouse with average collection efficiencies in excess of 99%. The reported value represents emissions of lead oxide that escape a baghouse used to collect the lead oxide product. The emission factor is based on the amount of lead oxide produced and represents an approximate upper limit for emissions.

Table 7.11-4. PARTICLE SIZE DISTRIBUTION OF PARTICULATES RECOVERED FROM A COMBINED BLAST AND REVERBERATORY FURNACE GAS STREAM WITH BAGHOUSE CONTROL[a]

Particle Size Range, μm	Fabric filter catch, wt %
0 to 1	13.3
1 to 2	45.2
2 to 3	19.1
3 to 4	14.0
4 to 16	8.4

[a] Reference 4, Table 86.

References for Section 7.11

1. William M. Coltharp, et al., Multimedia Environmental Assessment of the Secondary Nonferrous Metal Industry (Draft), 2 Volumes, EPA Contract No. 68-02-1319, Radian Corporation, Austin, TX, June 1976.

2. H. Nack, et al., Development of an Approach to Identification of Emerging Technology and Demonstration Opportunities, EPA-650/2-74-048, U.S. Environmental Protection Agency, Research Triangle Park, NC, May 1974.

3. J. M. Zoller, et al., A Method of Characterization and Quantification of Fugitive Lead Emissions from Secondary Lead Smelters, Ferroalloy Plants and Gray Iron Foundries (Revised), EPA-450/3-78-003 (Revised), U.S. Environmental Protection Agency, Research Triangle Park, NC, August 1978.

4. John A. Danielson, editor, Air Pollution Engineering Manual, Second Edition, AP-40, U.S. Environmental Protection Agency, Research Triangle Park, NC, May 1973, pp. 299-304. Out of Print.

5. Control Techniques for Lead Air Emissions, EPA-450/2-77-012, U.S. Environmental Protection Agency, Research Triangle Park, NC, January 1978.

6. Background Information for Proposed New Source Performance Standards, Volume I: Secondary Lead Smelters and Refineries, APTD-1352, U.S. Environmental Protection Agency, Research Triangle Park, NC, June 1973.

7. J. W. Watson and K. J. Brooks, A Review of Standards of Performance for New Stationary Sources - Secondary Lead Smelters (Draft), EPA Contract No. 68-02-2526, The Mitre Corporation, McLean, VA, June 1978.

8. John E. Williamson, et al., A Study of Five Source Tests on Emissions from Secondary Lead Smelters, EPA Order No. 2PO-68-02-3326, County of Los Angeles Air Pollution Control District, Los Angeles, CA, February 1972.

9. Emission Test No. 72-CI-8, Office of Air Quality Planning and Standards, U.S. Environmental Protection Agency, Research Triangle Park, NC, July 1972.

10. Emission Test No. 72-CI-7, Office of Air Quality Planning and Standards, U.S. Environmental Protection Agency, Research Triangle Park, NC, August 1972.

11. A. E. Vandergrift, et al., Particulate Pollutant Systems Study, Volume I: Mass Emissions, APTD-0743, U.S. Environmental Protection Agency, Research Triangle Park, NC, May 1971.

12. Emission Test No. 71-CI-33, Office of Air Quality Planning and Standards, U.S. Environmental Protection Agency, Research Triangle Park, NC, August 1972.

13. Emission Test No. 71-CI-34, Office of Air Quality Planning and Standards, U.S. Environmental Protection Agency, Research Triangle Park, NC, July 1972.

14. Technical Guidance for Control of Industrial Process Fugitive Particulate Emissions, EPA-450/3-77-010, U.S. Environmental Protection Agency, Research Triangle Park, NC, March 1977.

15. Silver Valley/Bunker Hill Smelter Environmental Investigation (Interim Report), EPA Contract No. 68-02-1343, PEDCo-Environmental Specialists, Inc., Cincinnati, OH, February 1975.

16. E. I. Hartt, An Evaluation of Continuous Particulate Monitors at a Secondary Lead Smelter, M.S. Report No. O.R.-16, Environmental Protection Service, Environment Canada.

17. J. E. Howes, et al., Evaluation of Stationary Source Particulate Measurement Methods, Volume V: Secondary Lead Smelters, EPA Contract No. 68-02-0609, Battelle Columbus Laboratories, Columbus, OH, January 1979.

7.12 SECONDARY MAGNESIUM SMELTING

7.12.1 Process Description[1]

Magnesium smelting is carried out in crucible or pot-type furnaces that are charged with magnesium scrap and fired by gas, oil, or electric heating. A flux is used to cover the surface of the molten metal because magnesium will burn in air at the pouring temperature (approximately 1500 F or 815°C). The molten magnesium, usually cast by pouring into molds, is annealed in ovens utilizing an atmosphere devoid of oxygen.

7.12.2 Emissions[1]

Emissions from magnesium smelting include particulate magnesium (MgO) from the melting, nitrogen oxides from the fixation of atmospheric nitrogen by the furnace temperatures, and sulfur dioxide losses from annealing oven atmospheres. Factors affecting emissions include the capacity of the furnace; the type of flux used on the molten material; the amount of lancing used; the amount of contamination of the scrap, including oil and other hydrocarbons; and the type and extent of control equipment used on the process. The emission factors for a pot furnace are shown in Table 7.12-1.

Table 7.12-1. EMISSION FACTORS FOR MAGNESIUM SMELTING EMISSION FACTOR RATING: C

Type of furnace	Particulates[a]	
	lb/ton	kg/MT
Pot furnace		
Uncontrolled	4	2
Controlled	0.4	0.2

[a]References 2 and 3. Emission factors expressed as units per unit weight of metal processed.

References for Section 7.12

1. Air Pollutant Emission Factors. Final Report. Resources Research, Inc. Reston, Va. Prepared for National Air Pollution Control Administration, Durham, N.C., under Contract Number CPA-22-69-119. April 1970.

2. Allen, G. L. et al. Control of Metallurgical and Mineral Dusts and Fumes in Los Angeles County. Department of the Interior, Bureau of Mines. Washington, D.C. Information Circular Number 7627. April 1952.

3. Hammond, W. F. Data on Non-Ferrous Metallurgical Operations. Los Angeles County Air Pollution Control District. November 1966.

7.13 STEEL FOUNDRIES

7.13.1 Process Description[1]

Steel foundries produce steel castings by the melting, alloying and molding of pig iron and steel scrap. The process flow diagram of a typical steel foundry is presented in Figure 7.13-1. The major processing operations of the typical steel foundry are raw materials handling, metal melting, mold and core production, and casting and finishing.

Raw Materials Handling - The raw material handling operations include the receiving, unloading, storage and conveying of all raw materials for the foundry. Some of the raw materials used by steel foundries are pig iron, iron and steel scrap, foundry returns, metal turnings, alloys, carbon additives, fluxes (limestone, soda ash, fluorspar, calcium carbide), sand, sand additives, and binders. These raw materials are received in ships, railcars, trucks, and containers, and are transferred by trucks, loaders, and conveyors to both open pile and enclosed storage areas. They are then transferred by similar means from storage to the subsequent processes.

Metal Melting - Generally, the first step in the metal melting operations is scrap preparation. Since scrap is normally purchased in the proper size for furnace feed, preparation primarily consists of scrap degreasing. This is very important for electric induction furnaces, as organics on scrap can be explosive. Scrap may be degreased with solvents, by centrifugation or by incinerator or preheater combustion. After preparation, the scrap, metal, alloy, and flux are weighed and charged to the furnace.

Electric arc furnaces are used almost exclusively in the steel foundry for melting and formulating steel. Electric arc furnaces are large refractory lined steel pots, fitted with a refractory roof through which three graphite electrodes are inserted. The metal charge is melted with resistive heating generated by electrical current flowing among the electrodes and through the charge. Electric arc furnaces are charged with raw materials by removing the lid, through a chute opening in the lid, or through a door in the side. The molten metal is tapped by tilting and pouring through a hole in the side. Melting capacities range up to 10 megagrams (11 tons) per hour.

A second, less common, furnace used in steel foundries is the open hearth furnace, a very large shallow refractory lined vessel which is operated in a batch manner. The open hearth furnace is fired at alternate ends, using the heat from the waste combustion gases to heat the incoming combustion air.

A third furnace used in the steel foundry is the induction furnace. Induction furnaces are vertical refractory lined cylinders

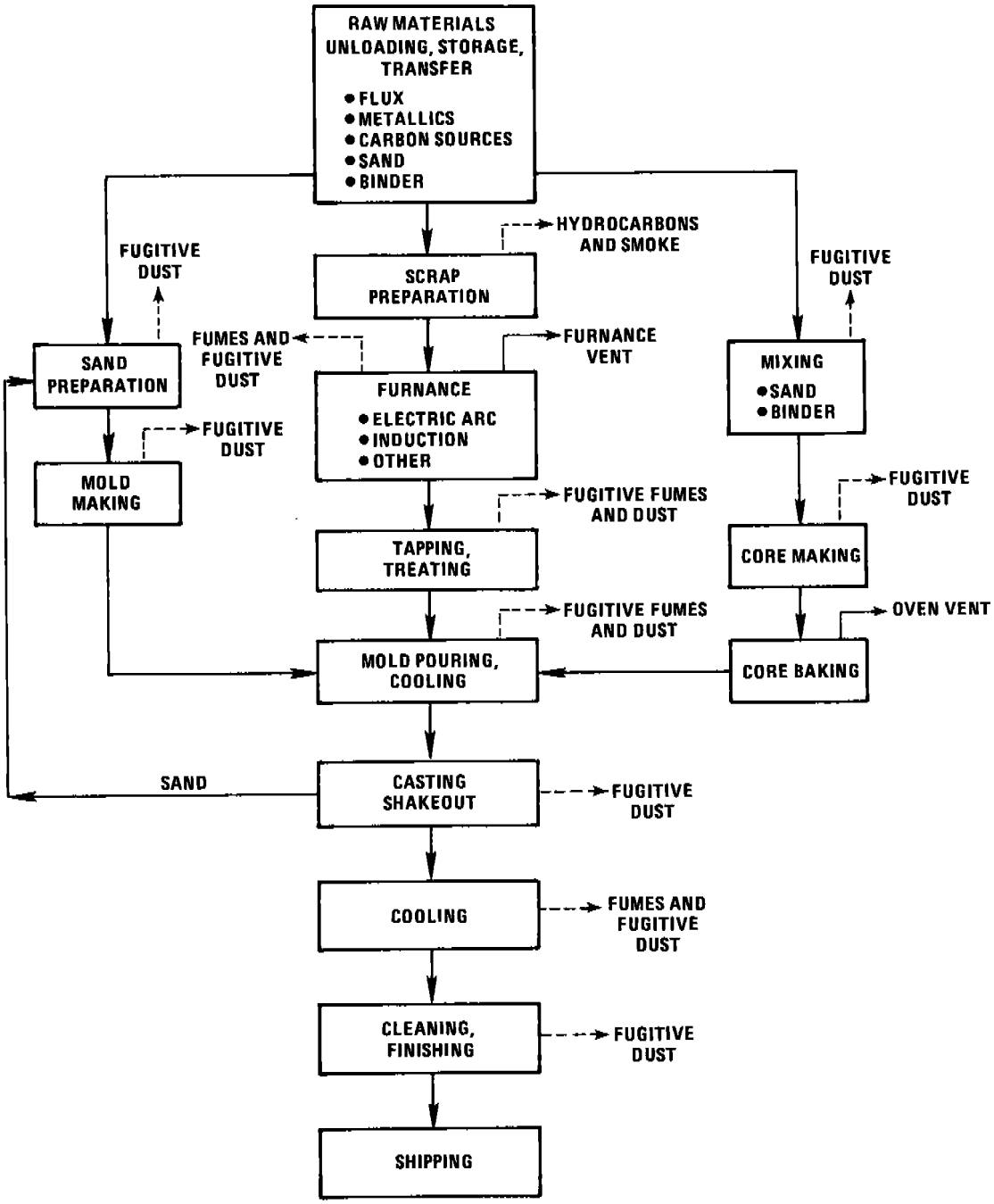

Figure 7.13-1. Typical flow diagram of a steel foundry.

surrounded by electrical coils energized with alternating current. The resulting fluctuating magnetic field heats the metal. Induction furnaces are kept closed except when charging, skimming and tapping. The molten metal is tapped by tilting and pouring through a hole in the side. Induction furnaces are also used with other furnaces, to hold and superheat a charge melted and refined in the other furnaces. A very small fraction of the secondary steel industry also uses crucible and pneumatic converter furnaces.

The basic melting process operations are 1) furnace charging, in which metal, scrap, alloys, carbon, and flux are added to the furnace, 2) melting, during which the furnace remains closed, 3) backcharging, which is the addition of more metal and possibly alloys, 4) refining, during which the carbon content is adjusted, 5) oxygen lancing, which is injecting oxygen into the molten steel to dislodge slag and to adjust the chemistry of the metal, 6) slag removal, and 7) tapping the molten metal into a ladle or directly into molds.

Mold and Core Production - Cores are forms used to make the internal voids in castings, and molds are forms used to shape the casting exterior. Cores are made of sand with organic binders, molded into a core and baked in an oven. Molds are made of wet sand with clay and organic additives, dried with hot air. Increasingly, coal setting binders are being used in both core and mold production. Used sand from castings shakeout operations is recycled to the sand preparation area, where it is cleaned, screened and reused.

Casting and Finishing - When the melting process is complete, the molten metal is tapped and poured into a ladle. At this time, the molten metal may be treated by adding alloys and/or other chemicals. The treated metal is then poured into molds and is allowed partially to cool under carefully controlled conditions. Molten metal may be poured directly from the furnace to the mold.

When partially cooled, the castings are placed on a vibrating grid, and the sand of the mold and core are shaken away from the casting. The sand is recycled to the mold manufacturing process, and the casting is allowed to cool further.

In the cleaning and finishing process, burrs, risers and gates are broken or ground off to match the contour of the casting. Afterward, the castings are usually shot blasted to remove remaining mold sand and scale.

7.13.2 Emissions and Controls[1]

Emissions from the raw materials handling operations are fugitive particulates generated from receiving, unloading, storage and conveying all raw materials for the foundry. These emissions are controlled by enclosing the major emission points and routing the air from the enclosures through fabric filters.

Emissions from scrap preparation consist of hydrocarbons if solvent degreasing is used, and consist of smoke, organics and carbon monoxide if heating is used. Catalytic incinerators and afterburners of approximately 95 percent control efficiency for carbon monoxide and organics can be applied to these sources.

Emissions from melting furnaces are particulates, carbon monoxide, organics, sulfur dioxide, nitrogen oxides, and small quantities of chlorides and fluorides. The particulates, chlorides and fluorides are generated by the flux, the carbon additives, and dirt and scale on the scrap charge. Organics on the scrap and the carbon additives effect CO emissions. The highest concentrations of furnace emissions occur during charging, backcharging, alloying, oxygen lancing, slag removal, and tapping operations, when the furnace lids and doors are opened. Characteristically, these emissions have escaped into the furnace building and have been vented through roof vents. Controls for emissions during the melting and refining operations focus on venting the furnace gases and fumes directly to an emission collection duct and control system. Controls for fugitive furnace emissions involve either the use of building roof hoods or of special hoods near the furnace doors, to collect emissions and route them to emission control systems. Emission control systems commonly used to control particulate emissions from electric arc and induction furnaces are bag filters, cyclones and venturi scrubbers. The capture efficiencies of the collection systems, presented in Table 7.13-1, range from 80 to 100 percent. Usually, induction furnaces are uncontrolled.

The major pollutants from mold and core production are particulates from sand reclaiming, sand preparation, sand mixing with binders and additives, and mold and core forming. There are volatile organics (VOC), CO and particulate emissions from core baking, and VOC emissions from mold drying. Bag filters and high energy scrubbers can be used to control particulates from mold and core production. Afterburners and catalytic incinerators can be used to control VOC and CO emissions.

In the casting operations, large quantities of particulates can be generated in the steps prior to pouring. Emissions from pouring consist of fumes, CO, VOC, and particulates from the mold and core materials when contacted by the molten steel. As the mold cools, emissions continue. A significant quantity of particulate emissions is also generated during the casting shakeout operation. The particulate emissions from the shakeout operations can be controlled by either high efficiency cyclones or bag filters. Emissions from pouring are usually uncontrolled.

Emissions from finishing operations consist of large particulates from the removal of burrs, risers and gates, and during shot blasting. Particulates from finishing operations typically are large and are generally controlled by cyclones.

TABLE 7.13-1. EMISSION FACTORS FOR STEEL FOUNDRIES

EMISSION FACTOR RATING: A

Process	Particulates[a] kg/Mg	Particulates[a] lb/ton	Nitrogen oxides kg/Mg	Nitrogen oxides lb/ton
Melting				
Electric arc[b,c]	6.5 (2 to 20)	13 (4 to 40)	0.1	0.2
Open hearth[d,e]	5.5 (1 to 10)	11 (2 to 20)	0.005	0.01
Open hearth oxygen lanced[f,g]	5 (4 to 5.5)	10 (8 to 11)	-	-
Electric induction[h]	0.05	0.1	-	-

[a]Expressed as units per unit weight of metal processed. If the scrap metal is very dirty or oily, or if increased oxygen lancing is employed, the emission factor should be chosen from the high side of the factor range.
[b]Electrostatic precipitator, 92 - 98% control efficiency; baghouse (fabric filter), 98 - 99% control efficiency; venturi scrubber, 94 - 98% control efficiency.
[c]References 2 - 10.
[d]Electrostatic precipitator, 95 - 98.5% control efficiency; baghouse, 99.9% control efficiency; venturi scrubber, 96 - 99% control efficiency.
[e]References 2, 11 - 13.
[f]Electrostatic precipitator, 95 - 98% control efficiency; baghouse, 99% control efficiency; venturi scrubber, 95 - 98% control efficiency.
[g]References 6 and 14.
[h]Usually not controlled.

Emission factors for melting furnaces in the steel foundry are presented in Table 7.13-1.

Although no emission factors are available for nonfurnace emission sources in steel foundries, they are very similar to those in iron foundries.[1] Nonfurnace emission factors and particle size distributions for iron foundry emission sources are presented in Section 7.10, Gray Iron Foundries.

References for Section 7.13

1. Paul F. Fennelly and Peter D. Spawn, Air Pollutant Control Techniques for Electric Arc Furnaces in the Iron and Steel Foundry Industry, EPA-450/2-78-024, U.S. Environmental Protection Agency, Research Triangle Park, NC, June 1978.

2. J.J. Schueneman, et al., Air Pollution Aspects of the Iron and Steel Industry, National Center for Air Pollution Control, Cincinnati, OH, June 1963.

3. Foundry Air Pollution Control Manual, 2nd Ed., Foundry Air Pollution Control Committee, Des Plaines, IL, 1967.

4. R.S. Coulter, "Smoke, Dust, Fumes Closely Controlled in Electric Furnaces", Iron Age, 173:107-110, January 14, 1954.

5. Air Pollution Aspects of the Iron and Steel Industry, p. 109.

6. J.M. Kane and R.V. Sloan, "Fume Control Electric Melting Furnaces", American Foundryman, 18:33-34, November 1950.

7. Air Pollution Aspects of the Iron and Steel Industry, p. 109.

8. C.A. Faist, "Electric Furnace Steel", Proceedings of the American Institute of Mining and Metallurgical Engineers, 11:160-161, 1953.

9. Air Pollution Aspects of the Iron and Steel Industry, p. 109.

10. I.H. Douglas, "Direct Fume Extraction and Collection Applied to a Fifteen Ton Arc Furnace", Special Report on Fume Arrestment. Iron and Steel Institute, 1964, pp. 144, 149.

11. Inventory of Air Contaminant Emissions, New York State Air Pollution Control Board, Table XI, pp. 14-19. Date unknown.

12. A.C. Elliot and A.J. Freniere, "Metallurgical Dust Collection in Open Hearth and Sinter Plant", Canadian Mining and Metallurgical Bulletin, 55(606):724-732, October 1962.

13. C.L. Hemeon, "Air Pollution Problems of the Steel Industry", JAPCA, 10(3):208-218, March 1960.

14. D.W. Coy, Unpublished data, Resources Research, Incorporated, Reston, VA.

7.14 SECONDARY ZINC PROCESSING

7.14.1 Process Description[1,2]

The secondary zinc industry processes obsolete and scrap materials to recover zinc as slabs, dust and zinc oxide. Processing involves three operations, scrap pretreatment, melting and refining. Processes typically used in each operation are shown in Figure 7.14-1. Molten product zinc may be used in zinc galvanizing.

Scrap Pretreatment - Pretreatment is the partial removal of metal and other contaminants from scrap containing zinc. Sweating separates zinc from high melting metals and contaminants by melting the zinc in kettle, rotary, reverberatory, muffle or electric resistance furnaces. The product zinc then is usually directly used in melting, refining or alloying processes. The high melting residue is periodically raked from the furnace and further processed to recover zinc values. These residues may be processed by crushing/screening to recover impure zinc or by sodium carbonate leaching to produce zinc oxide.

In crushing/screening, zinc bearing residues are pulverized or crushed to break the physical bonds between metallic zinc and contaminants. The impure zinc is then separated in a screening or pneumatic classification step.

In sodium carbonate leaching, the zinc bearing residues are converted to zinc oxide, which can be reduced to zinc metal. They are crushed and washed to leach out zinc from contaminants. The aqueous stream is then treated with sodium carbonate, precipitating zinc as the hydroxide or carbonate. The precipitate is then dried and calcined to convert zinc hydroxide into crude zinc oxide. The ZnO product is usually refined to zinc at primary zinc smelters.

Melting - Zinc is melted at 425-590°C (800-1100°F) in kettle, crucible, reverberatory and electric induction furnaces. Zinc to be melted may be in the form of ingots, reject castings, flashing or scrap. Ingots, rejects and heavy scrap are generally melted first, to provide a molten bath to which light scrap and flashing are added. Before pouring, a flux is added and the batch agitated to separate the dross accumulating during the melting operation. The flux floats the dross and conditions it so it can be skimmed from the surface. After skimming, the melt can be poured into molds or ladles.

Refining/Alloying - Additional processing steps may involve alloying, distillation, distillation and oxidation, or reduction. Alloying produces mainly zinc alloys from pretreated scrap. Often the alloying operation is combined with sweating or melting.

Distillation retorts and furnaces are used to reclaim zinc from alloys or to refine crude zinc. Retort distillation is the

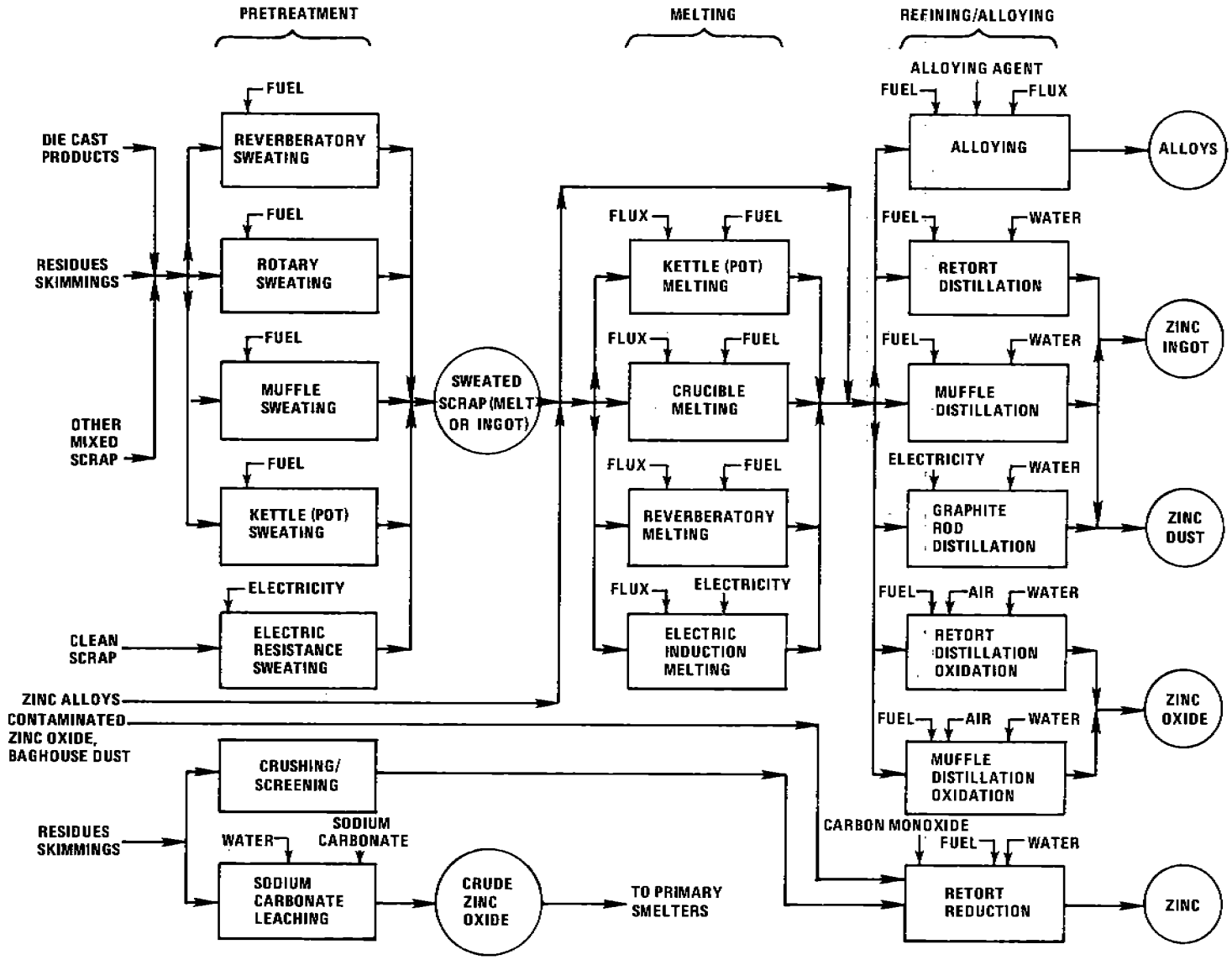

Figure 7.14-1. Process flow diagram of secondary zinc processing.

TABLE 7.14-1. UNCONTROLLED PARTICULATE EMISSION FACTORS FOR SECONDARY ZINC SMELTING[a]

EMISSION FACTOR RATING: C

Operation	Emissions kg/Mg	Emissions lb/ton
Reverberatory sweating[b]		
clean metallic scrap	Negligible	Negligible
general metallic scrap	6.5	13
residual scrap	16	32
Rotary sweating[c]	5.5-12.5	11-25
Muffle sweating[c]	5.4-16	10.8-32
Kettle sweating[b]		
clean metallic scrap	Negligible	Negligible
general metallic scrap	5.5	11
residual scrap	12.5	25
Electric resistance sweating[c]	<5	<10
Crushing/screening[c]	0.5-3.8	1.0-7.5
Sodium carbonate leaching		
crushing/screening[c]	0.5-3.8	1.0-7.5
calcining[d]	44.5	89
Kettle (pot) melting[d]	0.05	0.1
Crucible melting	DNA	DNA
Reverberatory melting	DNA	DNA
Electric induction melting	DNA	DNA
Alloying	DNA	DNA
Retort and muffle distillation		
pouring[c]	0.2-0.4	0.4-0.8
casting[c]	0.1-0.2	0.2-0.4
muffle distillation[d]	22.5	45
Graphite rod distillation[c,e]	Negligible	Negligible
Retort distillation/oxidation[f]	10-20	20-40
Muffle distillation/oxidation[f]	10-20	20-40
Retort reduction	23.5	47
Galvanizing[d]	2.5	5

[a]Expressed as units per unit weight of feed material processed for crushing/screening, skimming/residues processed; for kettle (pot) melting and retort and muffle distillation operations, metal product. Galvanizing factor expressed in units per unit weight of zinc used. DNA: Data not available.
[b]Reference 3.
[c]Reference 4.
[d]References 5-7.
[e]Reference 1.
[f]Reference 4. Factor units per unit weight of ZnO produced. The product zinc oxide dust is totally carried over in the exhaust gas from the furnace and is recovered with 98-99% efficiency.

vaporization at 980-1250°C (1800-2280°F) of elemental zinc with its subsequent condensation as zinc dust or liquid zinc. Rapid cooling of the vapor stream below the zinc melting point produces zinc dust, which can be removed from the condenser and packaged. If slab zinc is the desired product, the vapors are condensed slowly at a higher temperature. The resultant melt is cast into ingots or slabs. Muffle distillation furnaces produce principally zinc ingots, and graphite rod resistance distillation produces zinc dust.

Retort and muffle furnace distillation and oxidation processes produce zinc oxide dust. These processes are similar to distillation through the vaporization step. In contrast, for distillation/oxidation, the condenser is omitted, and the zinc vapor is discharged directly into an air stream leading to a refractory lined combustion chamber. Excess air is added to complete oxidation and to cool the product. The zinc oxide product is usually collected in a baghouse.

In retort reduction, zinc metal is produced by the reaction of carbon monoxide and zinc oxide to yield zinc and carbon dioxide. Carbon monoxide is supplied by the partial oxidation of the coke. The zinc is recovered by condensation.

Zinc Galvanizing - Zinc galvanizing is the coating of clean oxide free iron or steel with a thin layer of zinc by immersion in molten zinc. The galvanizing occurs in a vat or in dip tanks containing molten zinc and cover flux.

7.14.2 Emissions and Controls[1,2]

Factors for uncontrolled point source and fugitive particulate emissions are tabulated in Tables 7.14-1 and 7.14-2 respectively.

Emissions from sweating and melting operations consist principally of particulates, zinc fumes, other volatile metals, flux fumes and smoke generated by the incomplete combustion of grease, rubber and plastics in the zinc bearing feed material. Zinc fumes are negligible at low furnace temperatures, for they have a low vapor pressure even at 480°C (900°F). With elevated temperatures, however, heavy fuming can result. Flux emissions are minimized by the use of a nonfuming flux. Substantial emissions may arise from incomplete combustion of carbonaceous material in the zinc scrap. These contaminants are usually controlled by afterburners. Further emissions are the products of combustion of the furnace fuel. Since the furnace fuel is usually natural gas, these emissions are minor. In reverberatory furnaces, the products of fuel combustion are emitted with the other emissions. Other furnaces emit the fuel combustion products as a separate emission stream.

Particulates from sweating and melting are mainly hydrated $ZnCl_2$ and ZnO, with small amounts of carbonaceous material. Chemical

TABLE 7.14-2. FUGITIVE PARTICULATE UNCONTROLLED EMISSION FACTORS FOR SECONDARY ZINC SMELTING

EMISSION FACTOR RATING: E

Operation	Particulate	
	kg/Mg	lb/ton
Reverberatory sweating[b]	0.63	1.30
Rotary sweating[b]	0.45	0.90
Muffle sweating[b]	0.54	1.07
Kettle (pot) sweating[b]	0.28	0.56
Electric resistance sweating[b]	0.25	0.50
Crushing/screening[c]	2.13	4.25
Sodium carbonate leaching	DNA	DNA
Kettle (pot) melting furnace[b]	0.0025	0.005
Crucible melting furnace[d]	0.0025	0.005
Reverberatory melting furnace[b]	0.0025	0.005
Electric induction melting[b]	0.0025	0.005
Alloying retort distillation	DNA	DNA
Retort and muffle distillation	1.18	2.36
Casting[b]	0.0075	0.015
Graphite rod distillation	DNA	DNA
Retort distillation/oxidation	DNA	DNA
Muffle distillation/oxidation	DNA	DNA
Retort reduction	DNA	DNA

[a]Reference 8. Expressed as units per end product, except factors for crushing/screening and electric resistance furnaces, which are expressed as units per unit of scrap processed. DNA: Data not available.

[b]Estimate based on stack emission factor given in Reference 1, assuming fugitive emissions to be equal to 5% of stack emissions.

[c]Reference 1. Average of reported emission factors.

[d]Engineering judgement, assuming fugitive emissions from crucible melting furnace to be equal to fugitive emissions from kettle (pot) melting furnace.

analyses of particulate emissions from kettle sweat are shown in Table 7.14-3.

TABLE 7.14-3. COMPOSITION OF PARTICULATE EMISSIONS FROM KETTLE SWEAT PROCESSING[a]

Component	Percent
$ZnCl_2$	14.5 - 15.3
ZnO	46.9 - 50.0
NH_4Cl	1.1 - 1.4
Al_2O_3	1.0 - 2.7
Fe_2O_3	0.3 - 0.6
PbO	0.2
H_2O (in $ZnCl_2 \cdot 4H_2O$)	7.7 - 8.1
Oxide of Mg, Sn, Ni, Si, Ca, Na	2.0
Carbonaceous material	10.0
Moisture (deliquescent)	5.2 - 10.2

[a]Reference 3.

These particulates also contain Cu, Cd, Mn and Cr. Another analysis showed the following composition: 4 percent $ZnCl_2$, 77 percent ZnO, 4 percent H_2O, 4 percent metal chlorides and 10 percent carbonaceous matter.[4] These particulates vary widely in size. Particulates from kettle sweating of residual zinc scrap had the following size distributions:

60% 0 - 10μ

17% 11 - 20μ

23% >20μ

Particulates from kettle sweating of metallic scrap had mean particle size distributions ranging from $D_{p50} = 1.1/\mu$ to $D_{p50} = 1.6\mu$.[3] Emissions from a reverberatory sweat furnace had an approximate $D_{p50} = 1\mu$.

Baghouses are most commonly used to recover particulate emissions from sweating and melting. In one application on a muffle sweating

furnace, a cyclone and baghouse achieved particulate recovery efficiencies in excess of 99.7 percent.[4] In another application on a reverberatory sweating furnace, a baghouse removed 96.3 percent of the particulates, reducing the dust loading from 0.513 g/Nm^3 to 0.02 g/Nm^3.[2] Baghouses show similar efficiencies in removing particulates from exhaust gases of melting furnaces.

Crushing and screening operations are also sources of dust emissions. These particulates are composed of Zn, Al, Cu, Fe, Pb, Cd, Sn and Cr, and they can be recovered from hooded exhausts by baghouses.

The sodium carbonate leaching process produces particulate emissions of ZnO dust during the calcining operation. This dust can be recovered in baghouses, although $ZnCl_2$ in the dust may cause plugging problems.

Emissions from refining operations are mainly metallic fumes. These fume and dust particles are quite small, with sizes ranging from 0.05 - 1μ.[2] Distillation/oxidation operations emit their entire ZnO product in the exhaust gas. The ZnO has a very small particle size (0.03 to 0.5μ) and is recovered in baghouses with typical collection efficiencies of 98-99 percent.[4]

Some emissions of zinc oxide occur during galvanizing, but these emissions are small because of the bath flux cover and the relatively low temperature maintained in the bath.

Data describing the particle size distribution of fugitive emissions are unavailable. These emissions are probably similar in size to stack emissions.

References for Section 7.14

1. William M. Coltharp, et al., Multimedia Environmental Assessment of the Secondary Nonferrous Metal Industry, Draft Final Report, 2 vols., EPA Contract No. 68-02-1319, Radian Corporation, Austin, TX, June 1976.

2. John A. Danielson, Air Pollution Engineering Manual, 2nd Edition, AP-42, U.S. Environmental Protection Agency, Research Triangle Park, NC, 1973. Out of Print.

3. W. Herring, Secondary Zinc Industry Emission Control Problem Definition Study (Part I), APTD-0706, U.S. Environmental Protection Agency, Research Triangle Park, NC, May 1971.

4. H. Nack, et al., Development of an Approach to Identification of Emerging Technology and Demonstration Opportunities, EPA-650/2-74-048, U.S. Environmental Protection Agency, Research Triangle Park, NC, May 1974.

5. G.L. Allen, et al., Control of Metallurgical and Mineral Dusts and Fumes in Los Angeles County, Number 7627, U.S. Department of the Interior, Washington, DC, April 1952.

6. Restricting Dust and Sulfur Dioxide Emissions from Lead Smelters, translated from German, VDI Number 2285, U.S. Department of Health, Education and Welfare, Washington, DC, September 1961.

7. W.F. Hammond, Data on Nonferrous Metallurgical Operations, Los Angeles County Air Pollution Control District, Los Angeles, CA, November 1966.

8. Assessment of Fugitive Particulate Emission Factors for Industrial Processes, EPA-450/3-78-107, U.S. Environmental Protection Agency, Research Triangle Park, NC, September 1978.

7.15 STORAGE BATTERY PRODUCTION

7.15.1 Process Description[1]

Lead acid storage batteries are produced from lead alloy ingots and lead oxide. The lead oxide may be prepared by the battery manufacturer or may be purchased from a supplier. See Section 7.16.

Lead alloy ingots are charged to a melting pot, from which the molten lead flows into molds that form the battery grids. Pasting machines force a paste into the interstices of the grids, after which they are referred to as plates. The grids are often cast in doublets and split apart (slitting) after they have been pasted and cured. The paste is made in a batch type process. Mixing lead oxide powder, water and sulfuric acid produces a positive paste, and the same ingredients in slightly different proportions plus an expander (generally a mixture of barium sulfate, carbon black and organics) make the negative paste.

After the plates are cured, they are sent to the three process operation of plate stacking and burning and element assembly in the battery case. Doublet plates are cut apart and stacked in an alternating positive and negative block formation, with insulators between them. These insulators are of materials such as wood, treated paper, plastic or rubber. Then, in the burning operation, leads are welded to tabs on each positive or negative plate. An alternative to this operation is the cast-on strap process, in which molten lead is poured around the plate tabs to form the connection, and positive and negative terminals are then welded to each such connected element. The completed elements are assembled in battery cases either before (wet batteries) or after (dry batteries) the formation step.

Formation is the immersing of plates in a dilute sulfuric acid solution and the connecting of positive plates to the positive pole of a direct current (dc) source and the negative plates to the negative pole of the dc source. In the wet formation process, this is done in the battery case. After forming, the acid is dumped, fresh acid is added, and a boost charge is applied to complete the battery. In dry formation, the individual plates may be formed in tanks of sulfuric acid before assembly. Also, they may be assembled first and then formed in tanks. The formed elements from either method are then placed in the battery cases, and the batteries are shipped dry. Figure 7.15-1 is a process flow diagram for lead acid battery manufacture.

Defective parts are either reclaimed at the battery plant or are sent to a secondary lead smelter (See Section 7.11). Lead reclamation facilities at battery plants generally are small pot furnaces. Approximately 1 percent of the lead processed at a typical lead acid battery plant is recycled through the reclamation operation.

Lead acid storage battery plants range in production capacity from less than 500 batteries per day to about 10,000 batteries per day. Lead acid storage batteries are produced in many sizes, but the majority is produced for use in automobiles and falls into a standard size range. A standard

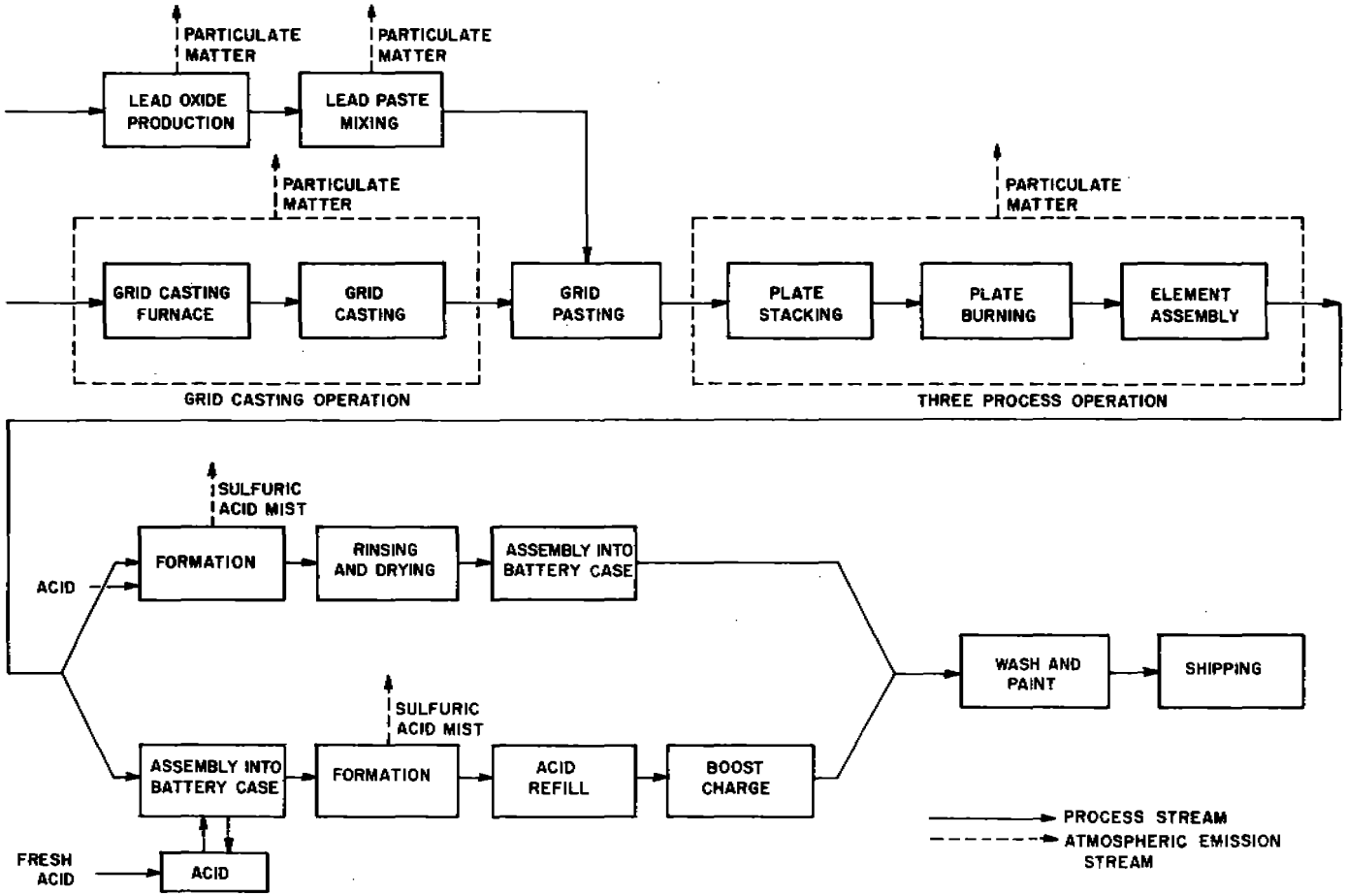

Figure 7.15-1. Process flow diagram for storage battery production.

TABLE 7.15-1. STORAGE BATTERY PRODUCTION EMISSION FACTORS[a]

Process	Particulate kg(lb)/10^3 batteries	Lead kg(lb)/10^3 batteries	Emission Factor Rating
Grid casting	1.42 (3.13)	0.35 (0.77)	B
Paste mixing	1.96 (4.32)	1.13 (2.49)	B
Lead oxide mill (baghouse outlet)[b]	0.05 (0.11)	0.05 (0.11)	C
Three process operation	42.0 (92.6)	4.79 (10.6)	B
Lead reclaim furnace[c]	3.03 (6.68)	0.63 (1.38)	B
Dry formation[d]	14.7 (32.4)	NA	B
Total production	63.2 (139)	6.94 (15.3)	

[a]References 1-7. NA = not applicable. Based on standard automotive batteries of about 11.8 kg (26 lb) of lead, of which approximately half is present in the lead grids and half in the lead oxide paste. Particulate emissions include lead and its compounds, as well as other substances. Lead emission factors are expressed as emissions of elemental lead.

[b]Reference 5. Emissions measured for a well controlled facility (fabric filters with an average air:cloth ratio of 3:1) were 0.025 kg (0.055 lb) particulate/1000 batteries and 0.024 kg (0.053 lb) lead/1000 batteries. Factors represent emissions from a facility with typical controls (fabric filtration with an air:cloth ratio of about 4:1). Emissions from a facility with typical controls are estimated to be about twice those from a well controlled facility (Reference 1).

[c]Based on the assumption that about 1% of the lead processed at a typical battery plant is processed by the reclaim operation.

[d]For sulfates in aerosol form, expressed as sulfuric acid, and not accounting for water and other substances which might be present.

battery contains about 11.8 kilograms (26 lb) of lead, of which about half is present in the lead grids and half in the lead oxide paste.

7.15.2 Emissions and Controls[1-7]

Lead oxide emissions result from the discharge of air used in the lead oxide production process. In addition, particulate matter and lead particulate are generated in the grid casting, paste mixing, lead reclamation, three process operations, and other operations such as slitting and small parts casting. These particulates are usually collected by ventilation systems to reduce employee exposure to airborne lead. Sulfuric acid mist emissions are generated during the formation step. Acid mist emissions are significantly higher for dry formation processes than for wet formation processes, because wet formation is conducted in battery cases, while dry formation is conducted in open tanks. Table 7.15-1 presents average uncontrolled emission factors for grid casting, paste mixing, lead reclamation, dry formation, and three process operations, and an average controlled emission factor for lead oxide production. The particulate emission factors presented in the Table include lead and its compounds. The lead emission factors represent emissions of lead in element and compound form, expressed as elemental lead.

A fabric filter is used as part of the process equipment to collect product from the lead oxide facility. Typical air to cloth ratios of fabric filters used for this facility are about 4 to 1. It is estimated that emissions from a facility controlled by a fabric filter with a 3 to 1 air to cloth ratio are about 50 percent less than those from a facility with a typical collection system.[1]

Fabric filters can also be used to control emissions from slitting and three process operations. The paste mixing operation consists of two phases. The first, in which dry ingredients are charged to the mixer, results in major emissions of lead oxide and is usually vented to a baghouse. For the second phase of the cycle, when moisture is present in the exhaust stream, the paste mixer generally is vented to an impingement scrubber. Grid casting machines are sometimes vented to an impingement scrubber. Lead reclamation facilities generally are also vented to impingement scrubbers.

Emission reductions of 99 percent and above can be obtained where fabric filtration is used to control slitting, paste mixing and three process operations. Application of scrubbers to paste mixing, grid casting and lead reclamation facilities can result in emission reductions from 85 percent to over 90 percent.

Wet formation processes usually do not require control. Emissions of sulfuric acid mist from dry formation processes can be reduced by over 95 percent with mist eliminators. Surface foaming agents are also used commonly in dry formation baths to control acid mist emissions.

References for Section 7.15

1. Lead Acid Battery Manufacture - Background Information for Proposed Standards, EPA 450/3-79-028a, U.S. Environmental Protection Agency, Research Triangle Park, NC, November 1979.

2. Source Test EPA-74-BAT-1, U.S. Environmental Protection Agency, Research Triangle Park, NC, March 1974.

3. Source Testing of Lead Acid Battery Manufacturing Plant - Globe-Union, Inc., Canby, OR, EPA-76-BAT-4, U.S. Environmental Protection Agency, Research Triangle Park, NC, 1976.

4. R.C. Fulton and G.W. Zolna, Report of Efficiency Testing Performed April 30, 1976, on American Air Filter Roto-Clone, Spotts, Stevens and McCoy, Inc., Wyomissing, PA, June 1, 1976.

5. Source Testing at a Lead Acid Battery Manufacturing Company - ESB, Canada, Ltd., Mississauga, Ontario, EPA-76-3, U.S. Environmental Protection Agency, Research Triangle Park, NC, 1976.

6. Emissions Study at a Lead Acid Battery Manufacturing Company - ESB, Inc., Buffalo, NY, EPA-76-BAT-2, U.S. Environmental Protection Agency, Research Triangle Park, NC, 1976.

7. Test Report - Sulfuric Acid Emissions from ESB Battery Plant Forming Room, Allentown, PA, EPA-77-BAT-5. U.S. Environmental Protection Agency, Research Triangle Park, NC, 1977.

7.16 LEAD OXIDE AND PIGMENT PRODUCTION

7.16.1 General

Lead oxide is used in the manufacture of lead/acid storage batteries (Section 7.15) and as a pigment in paints. Black oxide, which is used exclusively in storage batteries, contains 60 to 80 percent litharge (PbO) the remainder being finely divided metallic lead.[1] The major lead pigment is red lead (Pb_3O_4), which is used principally in ferrous metal protective paints. Other lead pigments include white lead and lead chromates.

Most lead oxides and many lead pigments are derived from lead monoxide (PbO) in the form of litharge, which is produced by (1) partially oxidizing lead and milling it into a powder, which is then completely oxidized in a reverberatory furnace; (2) oxidizing and stirring pig lead in a reverberatory furnace or rotary kiln; (3) running molten lead into a cupelling furnace; or (4) atomizing molten lead in a flame. The product must be cooled quickly to below 300°C (572°F) to avoid formation of red lead.[2]

Black oxide is usually produced (in the same furnace in which the litharge is made) by either the ball mill or Barton process. Cyclones and fabric filters collect the product. Red lead is produced by oxidizing litharge in a reverberatory furnace. Basic carbonate white lead production is based on the reaction of litharge with acetic acid or acetate ions. White leads other than carbonates are made either by chemical or fuming processes. Chromate pigments are generally manufactured by precipitation or calcination.

7.16.2 Emissions and Controls

Automatic shaker type fabric filters, often preceded by cyclone mechanical collectors or settling chambers, are the almost universal choice for collecting lead oxides and pigments. Where fabric filters are not appropriate, scrubbers are used, resulting in higher emissions. The ball mill and Barton processes of black oxide manufacturing recover the lead product by these two means. Collection of dust and fumes from the production of red lead is likewise an economic necessity, since particulate emissions, although small, are about 90 percent lead. Data on emissions from the production of white lead pigments are not available, but they have been estimated because of health and safety regulations. The emissions from dryer exhaust scrubbers account for over 50 percent of the total lead emitted in lead chromate production.

Table 7.16-1. LEAD OXIDE AND PIGMENT PRODUCTION EMISSION FACTORS[a]

EMISSION FACTOR RATING: B

Process	Particulate		Lead emission factor		References
	lb/ton produced	kg/10^3 kg produced	lb/ton produced	kg/10^3 kg produced	
Lead oxide production:					
Barton pot[b]	0.43-0.85	0.21-0.43	0.44	0.22	4,6,7
Calcining furnace	c	c	14.0	7.0	6
Pigment production:					
Red lead[b]	1.0[d]	0.5[d]	0.9	0.5	4,5
White lead[b]	c	c	0.55	0.28	4,5
Chrome pigments:	c	c	0.13	0.065	4,5

[a]Reference 4, pp. 4-283 and 4-287.
[b]Measured at baghouse outlet. Baghouse is considered process equipment.
[c]Data not available.
[d]Only PbO and oxygen used in red lead production, so particulate emissions assumed to be about 90% lead.

Table 7.16-2. LEAD OXIDE AND PIGMENT PRODUCTION CONTROL EFFICIENCIES

Process	Control	Percent reduction
Lead oxide and pigment production	Mechanical shaker fabric filter (preceded by dry cyclone or settling chamber)	99[a]
	Scrubber	70-95[b]

[a]Reference 3.
[b]Reference 4.

References for Section 7.16

1. E. J. Ritchie, *Lead Oxides*, Independent Battery Manufacturers Association, Inc., Largo, FL. 1974.

2. W. E. Davis, *Emissions Study of Industrial Sources of Lead Air Pollutants, 1970*, EPA Contract No. 68-02-0271, W. E. Davis and Associates, Leawood, KS, April 1973.

3. *Background Information in Support of the Development of Performance Standards for the Lead Additive Industry*, EPA Contract No. 68-02-2085, PEDCo-Environmental Specialists, Inc., Cincinnati, OH, January 1976.

4. *Control Techniques for Lead Air Emissions*, EPA-450/2-77-012. U.S. Environmental Protection Agency, Research Triangle Park, NC, December 1977.

5. R. P. Betz, *et al.*, *Economics of Lead Removal in Selected Industries*, EPA Contract No. 68-02-0299, Battelle Columbus Laboratories, Columbus, OH, December 1972.

6. Emission Test No. 74-PB-0-1, Office of Air Quality Planning and Standards, U.S. Environmental Protection Agency, Research Triangle Park, NC, August 1973.

7.17 MISCELLANEOUS LEAD PRODUCTS

7.17.1 Type Metal Production

7.17.1.1 General – Lead type, used primarily in the letterpress segment of the printing industry, is cast from a molten lead alloy and remelted after use. Linotype and monotype processes produce a mold, while the stereotype process produces a plate for printing. All type metal is an alloy consisting of 60 to 85 percent recovered lead, with antimony, tin and a small amount of virgin metal.

7.17.1.2 Emissions and Controls – The melting pot is the major source of emissions, containing hydrocarbons as well as lead particulates. Pouring the molten metal into the molds involves surface oxidation of the metal, possibly producing oxidized fumes, while the trimming and finishing operations emit lead particles. It is estimated that 35 percent of the total emitted particulate is lead.[1]

Approximately half of the current lead type operations control lead emissions, by about 80 percent. The other operations are uncontrolled.[2] The most frequently controlled sources are the main melting pots and drossing areas. Linotype equipment does not require controls when operated properly. Devices in current use on monotype and stereotype lines include rotoclones, wet scrubbers, fabric filters, and electrostatic precipitators, all which can be used in various combinations.

7.17.2 Can Soldering

7.17.2.1 Process Description – Side seams of cans are soldered on a machine consisting of a solder-coated roll operating in a bath of molten solder, typically containing 98 percent lead. After soldering, excess is wiped away by a rotating cloth buffer, which creates some dust (Table 7.17-1).[3]

7.17.2.2 Emissions and Controls – Hoods, exhaust ducts and mechanical cyclones (Table 7.17-2) collect the large flakes generated at the wiping station, but some dust escapes in the form of particles 20 microns or smaller, with a lead content of 3 to 38 percent. Maintaining a good flux cover is the most effective means of controlling lead emissions from the solder batch. Low energy wet collectors or fabric filters can also control lead emissions from can soldering.

7.17.3 Cable Covering

7.17.3.1 Process Description – About 90 percent of the lead cable covering produced in the United States is lead cured jacketed cables, and 10 percent is on lead sheathed cables. In preparation of the former type, an unalloyed lead cover applied in the vulcanizing treatment during the manufacture of rubber-insulated cable must be stripped from the cable and remelted.

Lead coverings are applied to insulated cable by hydraulic extrusion of solid lead around the cable. Molten lead is continuously fed into an extruder or screw press, where it solidifies as it progresses. A melting kettle supplies lead to the press.

7.17.3.2 Emissions and Controls – The melting kettle is the only source of atmospheric lead emissions, and it is generally uncontrolled.[4] Average particle size is approximately 5 microns, with a lead content of about 70 to 80 percent.[3,5]

Cable covering processes do not usually include particulate collection devices, although fabric filters, rotoclone wet collectors and dry cyclone collectors can reduce lead emissions (Table 7.17-2). Lowering and controlling the melt temperature, enclosing the melting unit and using fluxes to provide a cover on the melt can also minimize emissions.

Table 7.17-1 EMISSION FACTORS FOR MISCELLANEOUS SOURCES[a]

EMISSION FACTOR RATING: C

Process	Particulate emission factor		Lead emission factor		References
	Metric	English	Metric	English	
Type metal production	0.4 kg/10^3 kg Pb proc[b]	0.7 lb/ton Pb proc[b]	0.13 kg/10^3 kg Pb proc	0.25 lb/ton Pb proc	2,7
Can soldering	0.8 × 10^6 baseboxes prod[c]	0.9 ton/10^6 baseboxes prod[c]	160 kg/10^6 baseboxes prod[f]	0.18 ton/10^6 baseboxes prod	7
Cable covering	0.3 kg/10^3 kg Pb proc[d]	0.6 lb/ton Pb proc[d]	0.25 kg/10^3 kg Pb proc	0.5 lb/ton Pb proc	3,5,7
Metallic lead products					
Ammunition	e	e	≤0.5 kg/10^6 kg Pb proc	1.0 lb/10^3 ton Pb proc	3,7
Bearing metals	e	e	negligible	negligible	3,7
Other sources of lead	e	e	0.8 kg/10^3 kg Pb proc	1.5 lb/ton Pb proc	3,7

[a]Proc = processed; prod = produced.
[b]Calculated on the basis of 35% of the total (Reference 1).
[c]Reference 7, pp. 4-297 and 4-298.
[d]Reference 7, p. 4-301.
[e]Data not available.
[f]Basebox = 20.23 m^2 (217.8 ft^2), standard tin plate sheet area.

Table 7.17-2. CAN SOLDERING AND CABLE COVERING CONTROL EFFICIENCIES

Process	Control	Percent reduction
Can soldering	Mechanical cyclone	75 +
Cable covering	Fabric filter	99.9
	Rotoclone wet collector	75-85
	Dry cyclone collector	45 +

[a]Reference 7

7.17.4 Metallic Lead Products

7.17.4.1 General – Lead is consumed and emitted in the manufacture of ammunition, bearing metals and other lead products. Lead used in the manufacture of ammunition is melted and alloyed before it is cast, sheared, extruded, swaged or mechanically worked. Some lead is also reacted to form lead azide, a detonating agent. Lead is used in bearing manufacture by alloying it with copper, bronze, antimony and tin.

Other lead products include terne metal (a plating alloy), weights and ballasts, caulking lead, plumbing supplies, roofing materials, casting metal foil, collapsible metal tubes and sheet lead. Lead is also used for galvanizing, annealing and plating. It is usually melted and cast prior to mechanical forming operations.

7.17.4.2 Emissions and Controls – Little or no air pollution control equipment is currently used by manufacturers of metallic lead products.[6] Emissions from bearing manufacture are negligible, even without controls.[3]

References for Section 7.17

1. N. J. Kulujian, *Inspection Manual for the Enforcement of New Source Performance Standards: Portland Cement Plants,* EPA Contract No. 68-02-1355, PEDCo-Environmental Specialists, Inc., Cincinnati, OH, January 1975.

2. *Atmospheric Emissions from Lead Typesetting Operation Screening Study,* EPA Contract No. 68-02-2085, PEDCo-Environmental Specialists, Inc., Cincinnati, OH, January 1976.

3. W. E. Davis, *Emissions Study of Industrial Sources of Lead Air Pollutants, 1970,* EPA Contract No. 68-02-0271, W. E. Davis Associates, Leawood, KS, April 1973.

4. R. P. Betz, *et al., Economics of Lead Removal in Selected Industries,* EPA Contract No. 68-02-0611, Battelle Columbus Laboratories, Columbus, OH, August 1973.

5. E. P. Shea, *Emissions from Cable Covering Facility,* EPA Contract No. 68-02-0228, Midwest Research Institute, Kansas City, MO, June 1973.

6. *Mineral Industry Surveys: Lead Industry in May 1976,* Bureau of Mines, U.S. Department of the Interior, Washington, DC, August 1976.

7. *Control Techniques for Lead Air Emissions,* EPA-450/2-77-012, U.S. Environmental Protection Agency, Research Triangle Park, NC, December 1977.

7.18 LEADBEARING ORE CRUSHING AND GRINDING

7.18.1 Process Description

Lead and zinc ores are normally deep mined, whereas copper ores are open pit mined. Lead, zinc and copper are usually found together (in varying percentages) in combination with sulfur and/or oxygen.

In underground mines, the ore is disintegrated by percussive drilling machines, run through a primary crusher, and then conveyed to the surface. In open pit mines, ore and gangue are loosened and pulverized by explosives, scooped up by mechanical equipment, and transported to the concentrator.

Standard crushers, screens, and rod and ball mills classify and reduce the ore to powders in the 65 to 325 mesh range. The finely divided particles are separated from the gangue and are concentrated in a liquid medium by gravity and/or selective flotation, then cleaned, thickened and filtered. The concentrate is dried prior to shipment to the smelter.

7.18.2 Emissions and Controls

Lead emissions are basically fugitive, caused by drilling, blasting, loading, conveying, screening, unloading, crushing and grinding. The primary means of control are good mining techniques and equipment maintenance. These practices include enclosing the truck loading operation, wetting or covering truck loads and stored concentrates, paving the road from mine to concentrator, sprinkling the unloading area, and preventing leaks in the crushing and griding enclosures. Cyclones and fabric filters can be used in the milling operations.

Particulate and lead emission factors for lead ore crushing and materials handling operations are given in Table 7.18-1. Lead emissions from the mining and milling of copper ores are negligible.

Table 7.18-1. EMISSION FACTORS FOR ORE CRUSHING AND GRINDING

EMISSION FACTOR RATING: B

Type of ore	Particulate emission factor[a]		Lead emission factor[b]	
	lb/ton processed	kg/10^3 kg processed	lb/ton processed	kg/10^3 kg processed
Pb[c]	6.0	3.0	0.3	0.15
Zn	6.0	3.0	0.012	0.006
Cu	6.4	3.2	0.012	0.006
Pb-Zn	6.0	3.0	0.12	0.06
Cu-Pb	6.4	3.2	0.12	0.06
Cu-Zn	6.4	3.2	0.012	0.006
Cu-Pb-Zn	6.4	3.2	0.12	0.06

[a]Reference 1, pp. 4-39
[b]References 1-5
[c]Refer to Section 7.6

References for Section 7.18

1. *Control Techniques for Lead Air Emissions*. EPA-450/2-77-012, U. S. Environmental Protection Agency, Research Triangle Park, NC, December 1977.

2. W. E. Davis, *Emissions Study of Industrial Sources of Lead Air Pollutants, 1970*. EPA Contract No. 68-02-0271, W. E. Davis and Associates, Leawood, KS, April 1973.

3. *Environmental Assessment of the Domestic Primary Copper, Lead, and Zinc Industry*. EPA Contract No. 68-02-1321, PEDCO-Environmental Specialists, Inc., Cincinnati, OH, September 1976.

4. Communication with Mr. J. Patrick Ryan, Bureau of Mines, U. S. Department of the Interior, Washington, DC, September 9, 1976.

5. B. G. Wixson and J. C. Jennett, "The New Lead Belt in the Forested Ozarks of Missouri", *Environmental Science and Technology*, *9*(13):1128-1133, December 1975.

8. MINERAL PRODUCTS INDUSTRY

This section involves the processing and production of various minerals. Mineral processing is characterized by particulate emissions in the form of dust. Frequently, as in the case of crushing and screening, this dust is identical to the material being handled. Emissions also occur through handling and storing the finished product because this material is often dry and fine. Particulate emissions from some of the processes such as quarrying, yard storage, and dust from transport are difficult to control. Most of the emissions from the manufacturing processes discussed in this section, however, can be reduced by conventional particulate control equipment such as cyclones, scrubbers, and fabric filters. Because of the wide variety in processing equipment and final product, emissions cover a wide range; however, average emission factors have been presented for general use.

8.1 ASPHALTIC CONCRETE PLANTS

8.1.1 General

Asphaltic concrete (asphaltic hot mix) is a paving material which consists of a combination of graded aggregate that is dried, heated and evenly coated with hot asphalt cement.

Asphalt hot mix is produced by mixing hot, dry aggregate with hot liquid asphalt cement, in batch or continuous processes. Since different applications require different aggregate size distributions, the aggregate is segregated by size and is proportioned into the mix as required. In 1975, about 90 percent of total U.S. production was conventional batch process, and most of the remainder was continuous batch. The dryer drum process, another method of hot mix asphalt production, in which wet aggregate is dried and mixed with hot liquid asphalt cement simultaneously in a dryer, comprised less than 3 percent of the total, but most new construction favors this design. Plants may be either permanent or portable.

Conventional Plants - Conventional plants produce finished asphaltic concrete through either batch (Figure 8.1-1) or continuous (Figure 8.1-2) aggregate mixing operations. Raw aggregate is normally stockpiled near the plant, at a location where the moisture content will stabilize to between 3 and 5 percent by weight.

As processing for either type of operation begins, the aggregate is hauled from the storage piles and is placed in the appropriate hoppers of the cold feed unit. The material is metered from the hoppers onto a conveyor belt and is transported into a gas or oil fired rotary dryer. Because a substantial portion of the heat is transferred by radiation, dryers are equipped with flights designed to tumble the aggregate to promote drying.

As it leaves the dryer, the hot material drops into a bucket elevator and is transferred to a set of vibrating screens, where it is classified into as many as four different grades (sizes). The classified hot materials then enter the mixing operation.

In a batch plant, the classified aggregate drops into one of four large bins. The operator controls the aggregate size distribution by opening individual bins and allowing the classified aggregate to drop into a weigh hopper until the desired weight is obtained. After all the material is weighed, the sized aggregates are dropped into a mixer and mixed dry for about 30 seconds. The asphalt, a solid at ambient temperatures, is pumped from heated storage tanks, weighed and injected into the mixer. The hot mix is then dropped into a truck and hauled to the job site.

In a continuous plant, the classified aggregate drops into a set of small bins which collect and meter the classified aggregate to the mixer. From the hot bins, the aggregate is metered through

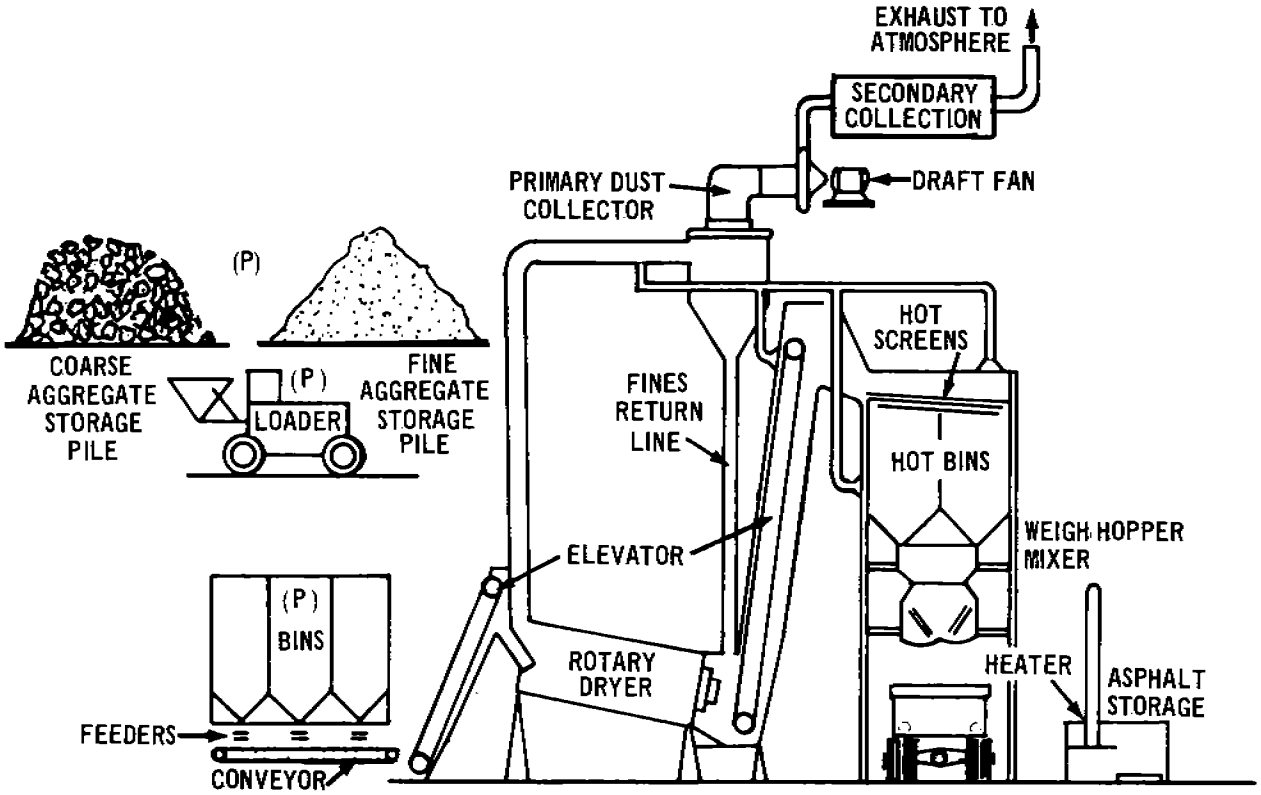

8.1-1. Batch hot mix asphalt plant. "P" denotes particulate emission points.[1]

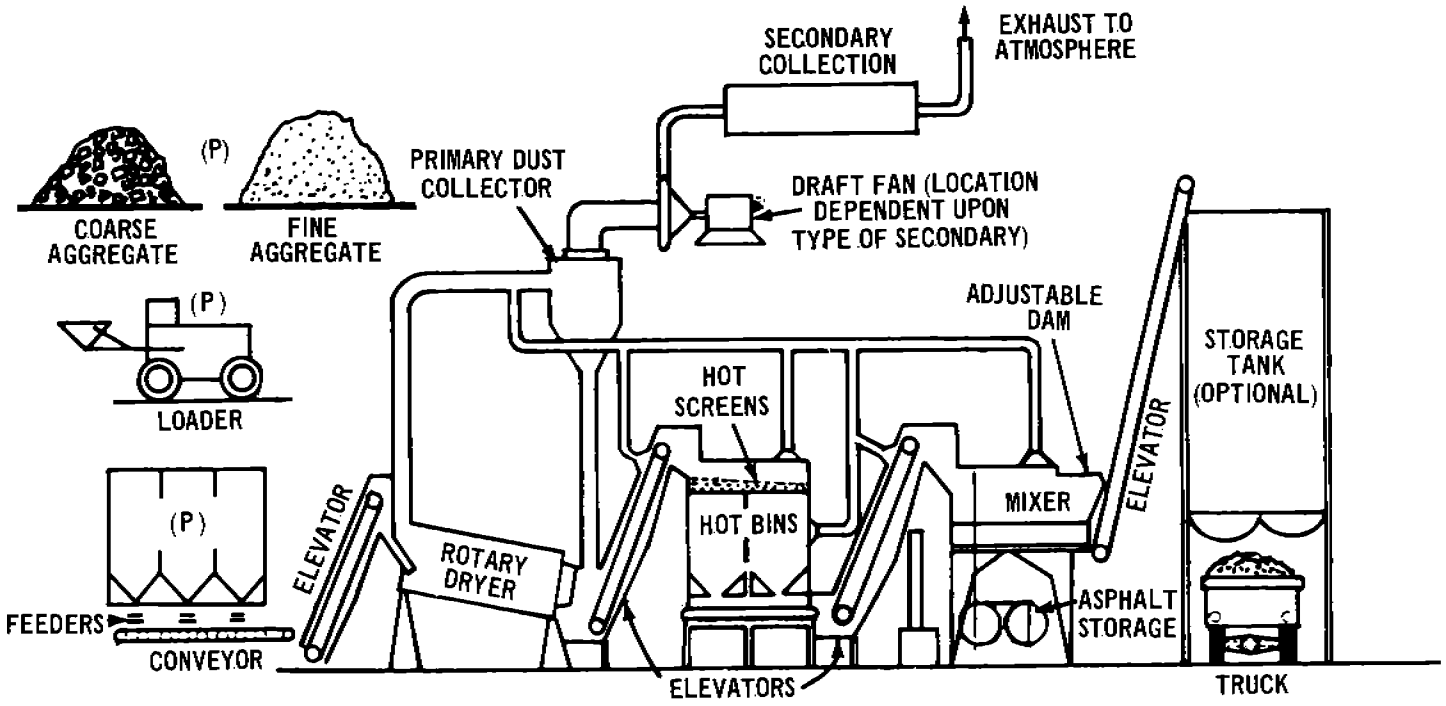

8.1 2. Continuous hot-mix asphalt plant. "P" denotes particulate emission points.[1]

a set of feeder conveyors to another bucket elevator and into the mixer. Asphalt is metered through the inlet end of the mixer, and retention time is controlled by an adjustable dam at the end of the mixer. The mix flows out of the mixer into a hopper from which trucks are loaded.

Dryer Drum Plants - The dryer drum process simplifies the conventional process by using proportioning feed controls in place of hot aggregate storage bins, vibrating screens and the mixer.

Figure 8.1-3 is a diagram of the dryer drum process. Both aggregate and asphalt are introduced near the flame end of the revolving drum. A variable flow asphalt pump is linked electronically to the aggregate belt scales to control mix specifications.

Dryer drum plants generally use parallel flow design for hot burner gases and aggregate flow. Parallel flow has the advantage of giving the mixture a longer time to coat and to collect dust in the mix, thereby reducing particulate emissions to the atmosphere. The amount of particulates generated within the dryer in this process is lower than that generated within conventional dryers, but because asphalt is heated to high temperatures for a long period of time, organic emissions are greater.

The mix is discharged from the revolving dryer drum into surge bins or storage silos.

Recycle Process for Drum Mix[22] - Asphalt injected directly into the dryer in the drum mix process is uniquely suited for the new, fast developing technology of recycling asphalt pavement. Many drum mix plants are now sold with a "recycle kit", which allows the plant to be converted to process blends of virgin and recycled material.

In a recycling process, salvaged asphalt pavement (or base material) that has been crushed and screened is introduced into the dryer drum at a point somewhere downstream of the virgin aggregate inlet. The amount of recycled pavement that can be successfully processed has not yet been determined, but eventually, as the technology is developed, the blends may approach 100 percent recycled material. Current blends range from about 20 percent to a maximum of 50 percent recycled material.

The advantages of the recycling process are that blended recycled material and virgin aggregate are generally less expensive than 100 percent virgin aggregate, liquid asphalt requirements are less due to residual asphalt in the recycled material, and the recycled material requires less drying than the virgin aggregate. The chief problem with recycling is opacity standards, because of emissions of blue smoke (an aerosol of submicron organic droplets volatilized from the asphalt and subsequently condensed before exiting the stack). However, current recycle plant designs have

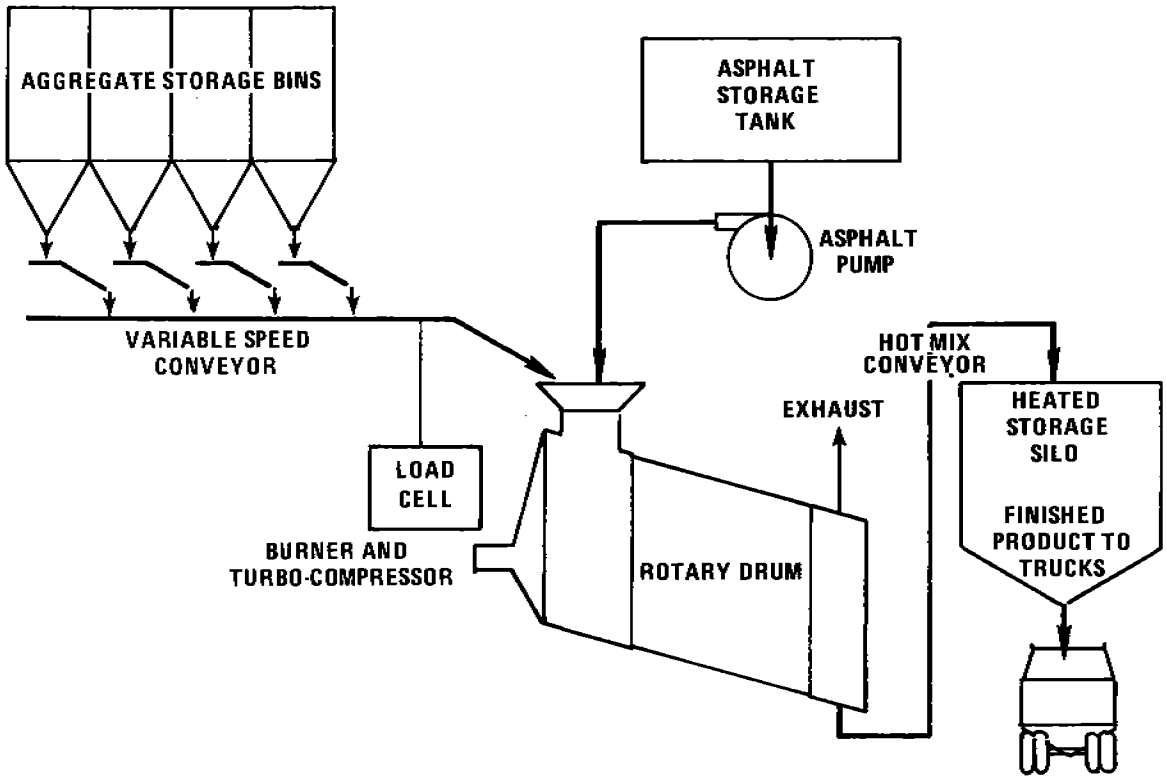

8.1-3. Shearer type dryer-drum hot asphalt plant.

reduced blue smoke emissions greatly by preventing direct contact of flame and liquid asphalt as it is injected.

8.1.2 Emissions and Controls

Emission points at batch, continuous and drum dryer hot mix asphalt plants numbered below refer to Figures 8.1-1, 2 and 3, respectively.

Emissions from the various sources in an asphaltic concrete plant are vented either through the dryer vent or the scavenger vent. The dryer vent stream goes to the primary collector. The outputs of the primary collector and the scavenger vent go to the secondary collector, then to the stack (1) for release to the atmosphere. The scavenger vent carries releases from the hot aggregate elevator (5), vibrating screens (5), hot aggregate storage bins (5), weigh hopper and mixer (2). The dryer vent carries emissions only from the dryer. In the dryer drum process, the screens, weigh hopper and mixer are not in a separate tower. Dryer emissions in conventional plants contain mineral fines and fuel combustion products, and the mixer assembly (2) also emits materials from the hot asphalt. In dryer drum plants, both types of emissions arise in the drum.

Emissions from drum mix recycled asphalt plants are similar to emissions from regular drum mix plants, except for greater volatile organics due to direct flame volatilization of petroleum derivatives contained in used asphalt. Control of liquid organic emissions in the drum mix recycle process is by (1) introduction of recycled material at the center of the drum or farther toward the discharge end, coupled with a flight design that causes a dense curtain of aggregate between the flame and the residual asphalt, (2) protection of the material from the flame by a heat shield, or (3) insulation of the recycled material from the combustion zone entirely by a drum-within-a-drum arrangement in which virgin material is dried and coated in the inner drum, recycled material is indirectly heated in the annular space surrounding the inner drum, and the materials are mixed at discharge of the inner drum.[22]

Potential fugitive particulate emission sources from asphaltic concrete plants include unloading of aggregate to storage bins (5), conveying aggregate by elevators (5), and aggregate screening operations (5). Another source of particulate emissions is the mixer (2), which, although it is generally vented into the secondary collector, is open to the atmosphere when a batch is loaded onto a truck. This is an intermittent operation, and ambient conditions (wind, etc.) are quite variable, so these emissions are best regarded as fugitive. The open truck (4) can also be a source of fugitive VOC emissions, as can the asphalt storage tanks (3), which may also emit small amounts of polycyclics.

Thus, fugitive particulate emissions from hot mix asphalt plants are mostly dust from aggregate storage, handling and transfer. Stone dust may range from 0.1 to more than 300 micrometers in diameter. On the average, 5 percent of cold aggregate feed is less than 74 micrometers (minus 200 mesh). Dust that may escape before reaching primary dust collection generally is 50 to 70 percent less than 74 micrometers. Materials emitted are given in Tables 8.1-1 and 8.1-4.

Emission factors for various materials emitted from the stack are given in Table 8.1-1. With the exception of aldehydes, the materials listed in this Table are also emitted from the mixer, but mixer concentrations are 5 to 100 fold smaller than stack concentrations, lasting only during the discharge of the mixer.

TABLE 8.1-1. EMISSION FACTORS FOR SELECTED MATERIALS FROM AN ASPHALTIC CONCRETE PLANT STACK[a]

Material emitted[b]	Emission factor[c]		Emission Factor Rating
	g/Mg	lb/ton	
Particulate[d]	137	.274	B
Sulfur oxides (as SO_2)[d,e]	146S	.292S	C
Nitrogen oxides (as NO_2)[f]	18	.036	D
Volatile organic compounds[f]	14	.028	D
Carbon monoxide[f]	19	.038	D
Polycyclic organic matter[f]	0.013	.000026	D
Aldehydes[f]	10	.020	D
Formaldehyde	0.077	.00015	D
2-Methylpropanal (isobutyraldehyde)	0.63	.0013	D
1-Butanal (n-butyraldehyde)	1.2	.0024	D
3-Methylbutanal (isovaleraldehyde)	8.3	.016	D

[a]Reference 16.
[b]Particulates, carbon monoxide, polycyclics, trace metals and hydrogen sulfide were observed in the mixer emissions at concentrations that were small relative to stack concentrations.
[c]Expressed as g/Mg and lb/ton of asphaltic concrete produced.
[d]Mean of 400 plant survey source test results.
[e]Reference 21. S = % sulfur in fuel. SO_2 may be attenuated >50% by adsorption on alkaline aggregate.
[f]Based on limited test data from the single asphaltic concrete plant described in Table 8.1-2.

Reference 16 reports mixer concentrations of SO_x, NO_x, VOC and ozone as less than certain values, so they may not be present at all, while particulates, carbon monoxide, polycyclics, trace metals and hydrogen sulfide were observed at concentrations that were small relative to stack amounts. Emissions from the mixer are thus best treated as fugitive.

The materials listed in Table 8.1-1 are discussed below. Factor ratings are listed for each material in the table. All emission factors are for controlled operation, based either on average industry practice shown by survey or on actual results of testing in a selected typical plant. The characteristics of this representative plant are given in Table 8.1-2.

TABLE 8.1-2. CHARACTERISTICS OF AN ASPHALTIC CONCRETE PLANT SELECTED FOR SAMPLING[a]

Parameter	Plant Sampled
Plant type	Conventional permanent batch plant
Production rate, Mg/hr (ton/hr)	160.3 ± 16% (177 ± 16%)
Mixer capacity, Mg (tons)	3.6 (4.0)
Primary collector	Cyclone
Secondary collector	Wet scrubber (venturi)
Fuel	Oil
Release agent	Fuel oil
Stack height, m (ft)	15.85 (52)

[a]Reference 16, Table 16.

The industrial survey showed that over 66 percent of operating hot mix asphalt plants use fuel oil for combustion. Possible sulfur oxide emissions from the stack were calculated assuming that all sulfur in the fuel oil is oxidized to SO_x. The amount of sulfur oxides actually released through the stack may be attenuated by water scrubbers or even by the aggregate itself, if limestone is being dried. No. 2 fuel oil has an average sulfur content of 0.22 percent.

Emission factors for nitrogen oxides, nonmethane volatile organics, carbon monoxide, polycyclic organic material and aldehydes

were determined by sampling stack gas at the representative asphalt hot mix plant.

The choice of applicable control equipment ranges from dry mechanical collectors to scrubbers and fabric collectors. Attempts to apply electrostatic precipitators have met with little success. Practically all plants use primary dust collection equipment such as large diameter cyclones, skimmers or settling chambers. These chambers are often used as classifiers to return collected material to the hot aggregate elevator combine it with the dryer aggregate load. The primary collector effluent is ducted to a secondary collection device because of high emission levels if vented to the atmosphere.

TABLE 8.1-3. PARTICULATE EMISSION FACTORS FOR CONVENTIONAL HOT MIX ASPHALTIC PLANTS[a]

EMISSION FACTOR RATING: B

Type of Control	Emission Factor[b] kg/Mg	lb/ton
Uncontrolled[c,d]	22.5	45.0
Precleaner[d]	7.5	15.0
High efficiency cyclone	0.85	1.7
Spray tower	0.20	0.4
Baffle spray tower	0.15	0.3
Multiple centrifugal scrubber[e]	0.035	0.07 (.007-.138)
Orifice scrubber	0.02	0.04
Venturi scrubber[f]	0.02	0.04 (.025-.053)
Baghouse[g]	0.01	0.02 (0.07-.036)

[a]References 1, 2, 5-10 and 14-16.
[b]Expressed in terms of emissions per unit weight of asphalt concrete produced.
[c]Almost all plants have at least a cleaner following the rotary dryer.
[d]Reference 16. These factors differ from those given in Table 8.1-1 because they are for uncontrolled emissions and are from an earlier survey.
[e]Reference 15. Average emission from a properly designed, installed, operated and maintained scrubber, based on a study to develop New Source Performance Standards.
[f]References 14 and 15.
[g]References 14 and 15. Emissions from a properly designed, installed, operated and maintained baghouse, based on a study to develop New Source Performance Standards.

Particulate emission factors for conventional asphaltic concrete plants are presented in Table 8.1-3. Particle size distribution information has not been included, because the particle size distribution varies with the aggregate being used, the mix being made and the type of plant operation. Potential fugitive particulate emission factors for conventional asphaltic concrete plants are shown in Table 8.1-4.

Particulate emission factors for dryer drum plants are presented in Table 8.1-5. (There are no data for other pollutants released from the dryer drum hot mix process.) Particle size distribution has not been included, because it varies with the aggregate used, the mix made and the type of plant operation. Emission factors for particulates in an uncontrolled plant can vary by a factor of 10, depending upon the percent of fine particles in the aggregate.

References for Section 8.1

1. Asphaltic Concrete Plants Atmospheric Emissions Study, EPA Contract No. 68-02-0076, Valentine, Fisher, and Tomlinson, Seattle, WA, November 1971.

2. Guide for Air Pollution Control of Hot Mix Asphalt Plants, Information Series 17, National Asphalt Pavement Association, Riverdale, MD.

3. J.A. Danielson, "Control of Asphaltic Concrete Batching Plants in Los Angeles County", JAPCA, 10(2):29-33, 1960.

4. H.E. Friedrich, "Air Pollution Control Practices and Criteria for Hot Mix Asphalt Paving Batch Plants", JAPCA, 19(12):424-8, December 1969.

5. Air Pollution Engineering Manual, AP-40, U.S. Environmental Protection Agency, Research Triangle Park, NC, 1973. Out of Print.

6. G.L. Allen, et al., "Control of Metallurgical and Mineral Dust and Fumes in Los Angeles County, California", Information Circular 7627, U.S. Department of Interior, Washington, DC, April 1952.

7. P.A. Kenline, Unpublished report on control of air pollutants from chemical process industries, Robert A. Taft Engineering Center, Cincinnati, OH, May 1959.

8. G. Sallee, Private communication on particulate pollutant study between Midwest Research Institute and National Air Pollution Control Administration, Durham, NC, June 1970.

TABLE 8.1-4. POTENTIAL UNCONTROLLED FUGITIVE PARTICULATE EMISSION FACTORS FOR CONVENTIONAL ASPHALTIC CONCRETE PLANTS

EMISSION FACTOR RATING: E

Type of Operation	Particulates[a] kg/Mg	Particulates[a] lb/ton
Unloading coarse and fine aggregate to storage bins[b]	0.05	0.10
Cold and dried (and hot) aggregate elevator[b]	0.10	0.20
Screening hot aggregate[c]	0.013	0.026

[a]Expressed as units per unit weight of aggregate.
[b]Reference 18. Assumed equal to similar sources.
[c]Reference 19. Asssumed equal to similar crushed granite processes.

TABLE 8.1-5. PARTICULATE EMISSION FACTORS FOR DRYER DRUM HOT MIX ASPHALT PLANTS[a]

EMISSION FACTOR RATING: B

Type of Control	Emission Factor[b] kg/Mg	Emission Factor[b] lb/ton
Uncontrolled	2.45	4.9
Cyclone or multicyclone	0.34	0.67
Low energy wet scrubber[c]	0.04	0.07
Venturi scrubber	0.02	0.04

[a]Reference 11.
[b]Expressed in terms of emissions per unit weight of asphalt concrete produced. These factors differ from those for conventional asphaltic concrete plants because the aggregate contacts, and is coated with, asphalt early in the dryer drum process.
[c]Either stack sprays where water droplets are injected into the exit stack, or a dynamic scrubber that incorporates a wet fan.

9. J.A. Danielson, Unpublished test data from asphalt batching plants, Los Angeles County Air Pollution Control District, Presented at Air Pollution Control Institute, University of Southern California, Los Angeles, CA, November 1966.

10. M.E. Fogel et al., Comprehensive Economic Study of Air Pollution Control Costs for Selected Industries and Selected Regions, R-OU-455, U.S. Environmental Protection Agency, Research Triangle Park, NC, February 1970.

11. Preliminary Evaluation of Air Pollution Aspects of the Drum Mix Process, EPA-340/1-77-004, U.S. Environmental Protection Agency, Research Triangle Park, NC, March 1976.

12. R.W. Beaty and B.M. Bunnell, "The Manufacture of Asphalt Concrete Mixtures in the Dryer Drum", Presented at the Annual Meeting of the Canadian Technical Asphalt Association, Quebec City, Quebec, November 19-21, 1973.

13. J.S. Kinsey, An Evaluation of Control Systems and Mass Emission Rates from Dryer Drum Hot Asphalt Plants, Colorado Air Pollution Control Division, Denver, CO, December 1976.

14. Background Information for Proposed New Source Performance Standards, APTD-1352A and B, U.S. Environmental Protection Agency, Research Triangle Park, NC, June 1973.

15. Background Information for New Source Performance Standards, EPA 450/2-74-003, U.S. Environmental Protection Agency, Research Triangle Park, NC, February 1974.

16. Z.S. Kahn and T.W. Hughes, Source Assessment: Asphalt Paving Hot Mix, EPA Contract No. 68-02-1874, Monsanto Research Corporation, Dayton, OH, July 1977.

17. V.P. Puzinauskas and L.W. Corbett, Report on Emissions from Asphalt Hot Mixes, RR-75-1A, The Asphalt Institute, College Park, MD, May 1975.

18. Evaluation of Fugitive Dust from Mining, EPA Contract No. 68-02-1321, Pedco Environmental Specialists, Inc., Cincinnati, OH, June 1976.

19. J.A. Peters and P.K. Chalekode, "Assessment of Open Sources", Presented at the Third National Conference on Energy and the Environment, College Corner, OH, October 1, 1975.

20. Illustration of Dryer Drum Hot Mix Asphalt Plant, Pacific Environmental Services, Inc., Santa Monica, CA, 1978.

21. Herman H. Forsten, "Applications of Fabric Filters to Asphalt Plants", Presented at the 71st Annual Meeting of the Air Pollution Control Association, Houston, TX, June 1978.

22. Emission of Volatile Organic Compounds from Drum Mix Asphalt Plants, EPA Contract No. 68-01-2585, JACA Corporation, Fort Washington, PA, September 1980.

8.2 ASPHALT ROOFING

8.2.1 General[1]

The asphalt roofing industry manufactures asphalt saturated felt rolls, shingles, roll roofing with mineral granules on the surface, and smooth roll roofing that may contain a small amount of mineral dust or mica on the surface. Most of these products are used in roof construction, with small quantities used in walls and other building applications.

8.2.2 Process Description

The manufacturing of asphalt felt, roofing, and shingles involves the saturating and coating of felt with heated asphalt (saturant asphalt and/or coating asphalt) by means of dipping and/or spraying. The process can be divided into (1) asphalt storage, (2) asphalt blowing, (3) felt saturation, (4) coating and (5) mineral surfacing. Glass fiber is sometimes used in place of the paper felt, in which case the asphalt saturation step is bypassed.

Preparation of the asphalt is an integral part of the production of asphalt roofing. This preparation, called "blowing", involves the oxidation of asphalt flux by bubbling air through liquid asphalt flux at 260°C (500°F) for 1 to 4.5 hours, depending on the desired characteristics of the asphalt, such as softening point and penetration rate.[2] A typical plant will blow from four to six batches per 16 hour day, and the roofing line will operate for 16 hours per day and 5 days per week. Blowing may be done either in vertical tanks or in horizontal chambers. Inorganic salts such as ferric chloride ($FeCl_3$) may be used as catalysts to achieve desired properties and to increase the rate of reaction in the blowing still, thus decreasing the time required for each blow.[3] Air blowing of asphalt may be conducted at oil refineries, asphalt processing plants, and asphalt roofing plants. Figure 8.2-1 illustrates an asphalt blowing operation.

Figure 8.2-2 shows a typical line for the manufacture of asphalt-saturated felt, which consists of a paper feed roll, a dry looper section, a saturator spray section (if used), a saturator dipping section, steam-heated drying-in drums, a wet looper, water cooled rollers, a finish floating looper, and a roll winder.

Organic felt may weigh from 25 to 55 pounds per 480 square feet (a common unit in the paper industry), depending upon the intended product. The felt is unrolled from the unwind stand into the dry looper, which maintains a constant tension on the material. From the dry looper, the felt may pass into the spray section of the saturator (not used in all plants), where asphalt at 205° to 250°C (400° to 480°F) is sprayed onto one side of the felt through several nozzles. In the saturator dip section, the saturated felt is drawn over a series of rollers, with the bottom rollers submerged in hot asphalt at 205° to 250°C (400° to 480°F).

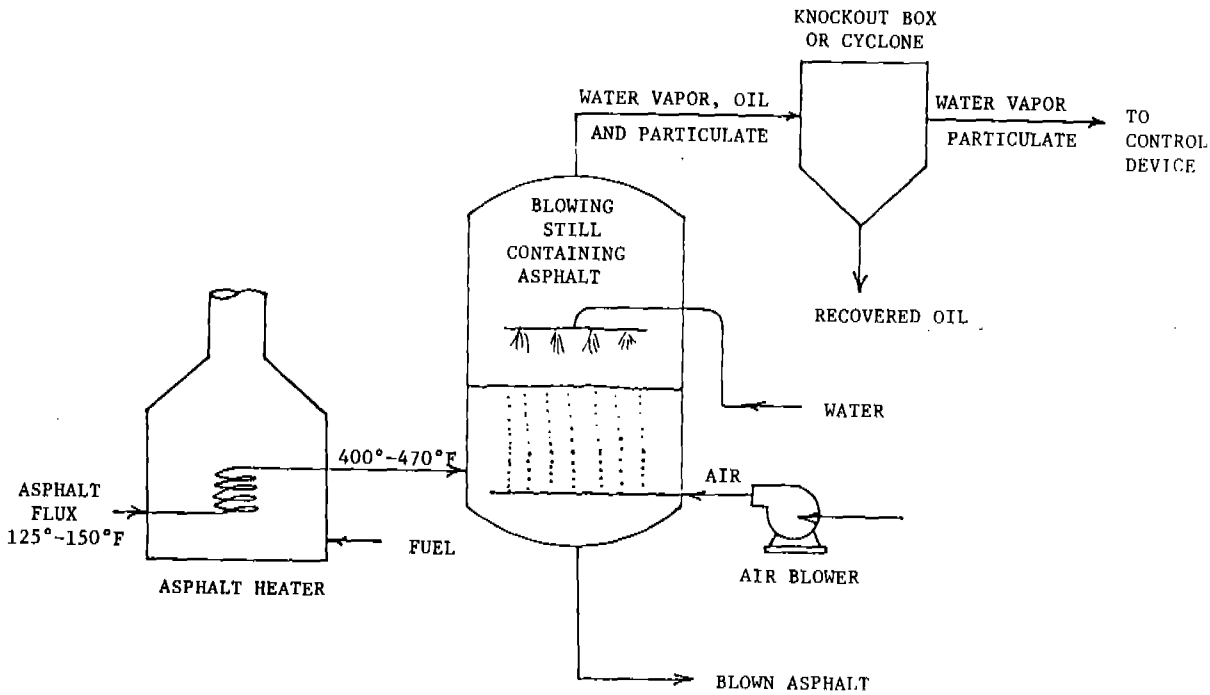

Figure 8.2.-1. Air blowing of asphalt.[3]

At the next step, steam heated drying-in drums and the wet looper provide the heat and time, respectively, for the asphalt to penetrate the felt. The saturated felt then passes through water cooled rolls and onto the finish floating looper, and then is rolled and cut on the roll winder to product size. Two common weights of asphalt felt are 15 and 30 pounds per 108 square feet (108 square feet of felt covers exactly 100 square feet of roof).

A typical process for manufacturing asphalt shingles, mineral surfaced rolls and smooth rolls is illustrated in Figure 8.2-3. This line is similar to the felt line, except that following the wet looper are a coater, a granule applicator, a press section, water cooled rollers, a finish floating looper, and either a roll winder or a shingle cutter and stacker. After leaving the wet looper, the saturated felt passes through the coater. Filled asphalt coating at 180° to 205°C (355° to 400°F) is released through a valve onto the felt just as it passes into the coater.[1] Filled asphalt is prepared by mixing coating asphalt at 205°C (400°F) and

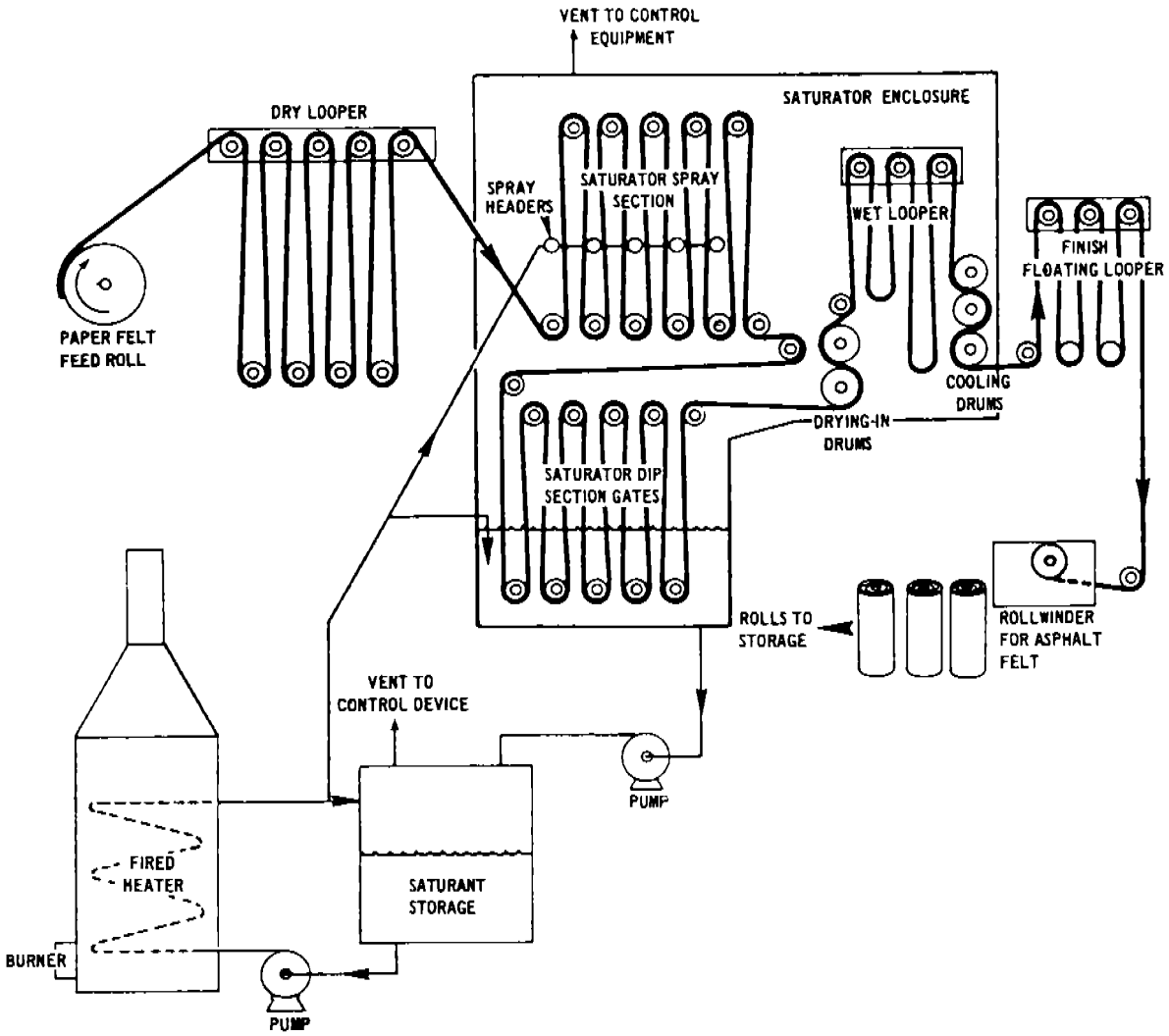

8.2-2. Schematic of line for manufacturing asphalt saturated felt.[1]

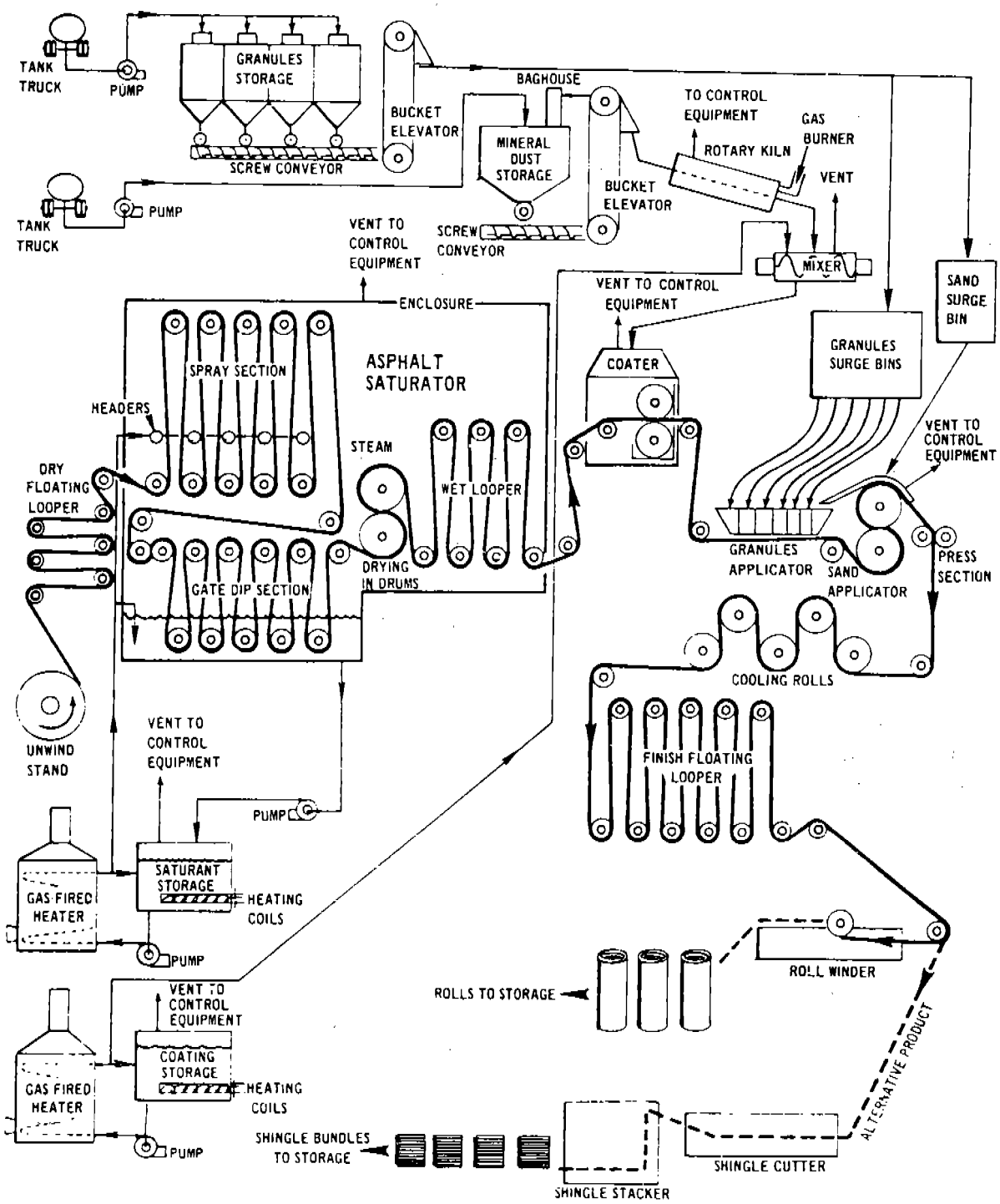

8.2-3. Schematic of line for manufacturing asphalt shingles, mineral surfaced rolls, and smooth rolls.[1]

a mineral stabilizer (filler) in approximately equal proportions. The filled asphalt is pumped to the coater. Sometimes the mineral stabilizer is dried at about 120°C (250°F) in a dryer before mixing with the coating asphalt. Heated squeeze rollers in the coater distribute the coating evenly upon the felt surface, to form a thick base coating to which rock granules, sand, talc, or mica can adhere. After leaving the coater, a felt to be made into shingles or mineral surfaced rolls passes through the granules applicator where granules are fed onto the hot, coated surface. The granules are pressed into the coating as it passes through squeeze rollers. Sand, talc or mica is applied to the back, or opposite, side of the felt and is also pressed into the felt surface. Following the application of the granules, the felt is cooled rapidly and is transferred through the finish flowing looper to a roll winder or shingle cutter.

8.2.3 Emissions and Controls

The atmospheric emissions from asphalt roofing manufacturing are:

1. gaseous and particulate organic compounds that include small amounts of particulate polycyclic organic matter (PPOM),

2. emissions of small amounts of aldehydes, carbon monoxide and sulfur dioxide, and

3. particulate emissions from mineral handling and storage.

The sources of the above pollutants are the asphalt blowing stills, the saturator and coater, the asphalt storage tanks, and the mineral handling and storage facilities. Emission factors from uncontrolled blowing and saturating processes for particulate, carbon monoxide, and volatile organic carbon as methane and nonmethane are summarized in Table 8.2-1.

A common method to control emissions at asphalt roofing plants is completely to enclose the saturator, wet looper and coater and then to vent the emissions to one or more control devices (see Figures 8.2-2 and 8.2-3). Fugitive emissions from the saturator may pass through roof vents and other openings in the building, if the saturator enclosure is not properly installed and maintained. Control devices used in the industry include afterburners, high velocity air filters, low voltage electrostatic precipitators, and wet scrubbers. Blowing operations are controlled by afterburners. Table 8.2-2 presents emission factors for controlled blowing and saturating processes.

Particulate emissions associated with mineral handling and storage operations are captured by enclosures, hoods or pickup pipes and are controlled by using cyclones and/or fabric filters with removal efficiencies of approximately 80-99 percent.

TABLE 8.2-1. EMISSION FACTORS FOR ASPHALT ROOFING MANUFACTURING WITHOUT CONTROLS[a]

EMISSION FACTOR RATING: PARTICULATE- A
OTHER- D

Operation	Particulates		Carbon monoxide		Volatile organic compounds: methane		Volatile organic compounds: nonmethane	
	kg/Mg	lb/ton	kg/Mg	lb/ton	kg/Mg	lb/ton	kg/Mg	lb/ton
Asphalt blowing[b]								
Saturant[c]	3.6	7.2	0.14[d]	0.27[d]	e	e	e	e
Coating[f]	13.4	26.7			0.94	1.88	0.93	1.86
Shingle saturation[g]	0.25	0.50	0.01	0.02	0.04	0.08	0.01	0.02
Shingle saturation[h]	1.57	3.14	0.13	0.25	0.11	0.22	0.02	0.03

[a]References 2 and 4.
[b]Expressed as kg/Mg (lb/ton) of asphalt processed.
[c]Saturant blow of 1.5 hours.
[d]Reference 2. CO data for uncontrolled emissions from stills was not obtained during latest test program.
[e]Species data not available for saturant blow. Total organics (as CH_4) for saturant blow are 0.73 kg/Mg (1.460 lb/ton).
[f]Coating blow of 4.5 hours.
[g]Expressed as kg/Mg (lb/ton) of 106.5 kg (235 lb) shingle produced. Data from dip saturators.
[h]Data from spray/dip saturator.

NOTES: -Particulate polycyclic organic matter is about 0.3 % of particulate for blowing stills and 0.1 % of particulate for saturators.

-Aldehyde emission measurements made during coating blows: 4.6×10^{-5} kg/Mg (9.2×10^{-5} lb/ton).

-Aldehyde emissions data taken from one saturator only, with afterburner the control device: 0.004 kg/Mg (0.007 lb/ton).

-Species data not obtained for uncontrolled VOC, assumed same percentage methane/nonmethane as in controlled emissions.

TABLE 8.2-2. EMISSION FACTORS FOR ASPHALT ROOFING MANUFACTURING WITH CONTROLS[a]

EMISSION FACTOR RATING: PARTICULATE- A
OTHER- D

Operation	Particulates		Carbon monoxide		Volatile organic compounds: methane		Volatile organic compounds: nonmethane	
	kg/Mg	lb/ton	kg/Mg	lb/ton	kg/Mg	lb/ton	kg/Mg	lb/ton
Asphalt blowing[b]								
Saturant[c]	0.25	0.50	0.6	1.2	d	d	d	d
Coating[e]	0.45	0.89	4.4	8.8	0.05	0.10	0.05	0.09
Shingle saturation[f]	0.03	0.06	0.45	0.89[g]	0.08	0.15	0.01	0.02

[a]References 2 and 4.
[b]Expressed as kg/Mg (lb/ton) of asphalt processed.
[c]Saturant blow of 1.5 hours.
[d]Species data not available for saturant blow. Total organics (as CH_4) for saturant blow are 0.015 kg/Mg (0.03 lb/ton).
[e]Coating blow of 4.5 hours.
[f]Expressed as kg/Mg (lb/ton) of 106.5 kg (235 lb) shingle produced (averages of test data from four plants).
[g]CO emissions data taken from one plant only, with afterburner the control device. Temperature of afterburner not high enough to convert CO to CO_2.

NOTE: Particulate polyclic organic matter is about 0.03 % of particulate for blowing stills and about 1.1 % of particulate for saturators.

In this industry, closed silos are used for mineral storage, so open storage piles are not a problem. To protect the minerals from moisture pickup, all conveyors that are outside the buildings are enclosed. Fugitive mineral emissions may occur at the unloading point, depending on the type of equipment used. The discharge from the conveyor to the silos is controlled by either a cyclone or a fabric filter.

References for Section 8.2

1. John A. Danielson, Air Pollution Engineering Manual (2d Ed.), AP-40, U.S. Environmental Protection Agency, Research Triangle Park, NC, May 1973. Out of print.

2. Atmospheric Emissions from Asphalt Roofing Processes, EPA Contract No. 68-02-1321, Pedco Environmental, Cincinnati, OH, October 1974.

3. L. W. Corbett, "Manufacture of Petroleum Asphalt", Bituminous Materials: Asphalts, Tars, and Pitches, Vol. 2, Part 1, New York, Interscience Publishers, 1965.

4. Background Information for Proposed Standards Asphalt Roofing Manufacturing Industry, EPA 450/3-80-021a, U.S. Enviromental Protection Agency, Research Triangle Park, NC, June 1980.

8.3 BRICKS AND RELATED CLAY PRODUCTS

8.3.1 Process Description

The manufacture of brick and related products such as clay pipe, pottery, and some types of refractory brick involves the mining, grinding, screening, and blending of the raw materials, and the forming, cutting or shaping, drying or curing, and firing of the final product.

Surface clays and shales are mined in open pits; most fine clays are found underground. After mining, the material is crushed to remove stones and stirred before it passes onto screens that are used to segregate the particles by size.

At the start of the forming process, clay is mixed with water, usually in a pug mill. The three principal processes for forming brick are: stiff-mud, soft-mud, and dry-process. In the stiff-mud process, sufficient water is added to give the clay plasticity; bricks are then formed by forcing the clay through a die and using cutter wire to separate the bricks. All structural tile and most brick are formed by this process. The soft-mud process is usually used when the clay contains too much water for the stiff-mud process. The clay is mixed with water until the moisture content reaches 20 to 30 percent, and the bricks are formed in molds. In the dry-press process, clay is mixed with a small amount of water and formed in steel molds by applying a pressure of 500 to 1500 psi. The brick manufacturing process is shown in Figure 8.3-1.

Before firing, the wet clay units that have been formed are almost completely dried in driers that are usually heated by waste heat from the kilns. Many types of kilns are used for firing brick; however, the most common are the tunnel kiln and the periodic kiln. The downdraft periodic kiln is a permanent brick structure that has a number of fireholes where fuel is fired into the furnace. The hot gases from the fuel are drawn up over the bricks, down through them by underground flues, and out of the oven to the chimney. Although fuel efficiency is not as high as that of a tunnel kiln because of lower heat recovery, the uniform temperature distribution through the kiln leads to a good quality product. In most tunnel kilns, cars carrying about 1200 bricks each travel on rails through the kiln at the rate of one 6-foot car per hour. The fire zone is located near the middle of the kiln and remains stationary.

In all kilns, firing takes place in six steps: evaporation of free water, dehydration, oxidation, vitrification, flashing, and cooling. Normally, gas or residual oil is used for heating, but coal may be used. Total heating time varies with the type of product; for example, 9-inch refractory bricks usually require 50 to 100 hours of firing. Maximum temperatures of about 2000°F (1090°C) are used in firing common brick.

8.3.2 Emissions and Controls[1,3]

Particulate matter is the primary emission in the manufacture of bricks. The main source of dust is the materials handling procedure, which includes drying, grinding, screening, and storing the raw material. Combustion products are emitted from the fuel consumed in the curing, drying, and firing portion of the process. Fluorides, largely in gaseous form, are also emitted from brick manufacturing operations. Sulfur dioxide may be emitted from the bricks when temperatures reach 2500°F (1370°C) or greater; however, no data on such emissions are available.[4]

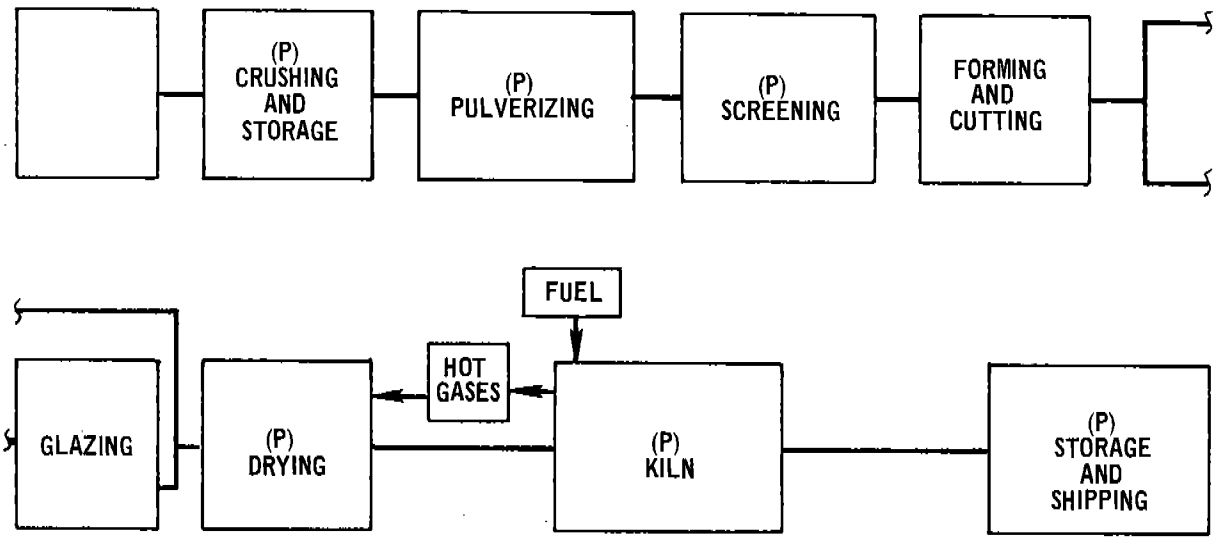

Figure 8.3-1. Basic flow diagram of brick manufacturing process. "P" denotes a major source of particulate emissions.

A variety of control systems may be used to reduce both particulate and gaseous emissions. Almost any type of particulate control system will reduce emissions from the material handling process, but good plant design and hooding are also required to keep emissions to a minimum.

The emissions of fluorides can be reduced by operating the kiln at temperatures below 2000°F (1090°C) and by choosing clays with low fluoride content. Satisfactory control can be achieved by scrubbing kiln gases with water; wet cyclonic scrubbers are available that can remove fluorides with an efficiency of 95 percent, or higher.

Emission factors for brick manufacturing are presented in Table 8.3-1. Insufficient data are available to present particle size information.

Table 8.3-1. EMISSION FACTORS FOR BRICK MANUFACTURING WITHOUT CONTROLS[a]
EMISSION FACTOR RATING: C

Type of process	Particulates		Sulfur oxides (SO_x)		Carbon monoxide (CO)		Hydrocarbons (HC)		Nitrogen oxides (NO_x)		Fluorides[b] (HF)	
	lb/ton	kg/MT	lb/ton	kg/MT	lb/ton	kg/MT	lb/ton	kg/MT	lb/ton	kg/MT	lb/ton	kg/MT
Raw material handling[c]												
Dryers, grinders, etc.	96	48	–	–	–	–	–	–	–	–	–	–
Storage	34	17	–	–	–	–	–	–	–	–	–	–
Curing and firing[d]												
Tunnel kilns												
Gas-fired	0.04	0.02	Neg[e]	Neg	0.04	0.02	0.02	0.01	0.15	0.08	1.0	0.5
Oil-fired	0.6	0.3	4.0S[f]	2.0S	Neg	Neg	0.1	0.05	1.1	0.55	1.0	0.5
Coal-fired	1.0A	0.5A[g]	7.2S	3.6S	1.9	0.95	0.6	0.3	0.9	0.45	1.0	0.5
Periodic kilns												
Gas-fired	0.11	0.05	Neg	Neg	0.11	0.05	0.04	0.02	0.42	0.21	1.0	0.5
Oil-fired	0.9	0.45	5.9S	2.95S	Neg	Neg	0.1	0.05	1.7	0.85	1.0	0.5
Coal-fired	1.6A	0.8A	12.0S	6.0S	3.2	1.6	0.9	0.45	1.4	0.70	1.0	0.5

[a]One brick weighs about 6.5 pounds (2.95 kg). Emission factors expressed as units per unit weight of brick produced.

[b]Based on data from References 3 and 6 through 10.

[c]Based on data from sections on ceramic clays and cement manufacturing in this publication. Because of process variation, some steps may be omitted. Storage losses apply only to that quantity of material stored.

[d]Based on data from References 1 and 5 and emission factors for fuel combustion.

[e]Negligible.

[f]S is the percent sulfur in the fuel.

[g]A is the percent ash in the coal.

References for Section 8.3

1. Air Pollutant Emission Factors. Final Report. Resources Research, Inc., Reston, Virginia. Prepared for National Air Pollution Control Administration, Durham, N.C., under Contract Number CPA-22-69-119. April 1970.

2. Technical Notes on Brick and Tile Construction. Structural Clay Products Institute. Washington, D.C. Pamphlet Number 9. September 1961.

3. Unpublished control techniques for fluoride emissions. Environmental Protection Agency, Office of Air Programs, Research Triangle Park, N.C.

4. Allen, M. H. Report on Air Pollution, Air Quality Act of 1967 and Methods of Controlling the Emission of Particulate and Sulfur Oxide Air Pollutants. Structural Clay Products Institute, Washington, D. C. September 1969.

5. Norton, F. H. Refractories, 3rd Ed. New York, McGraw-Hill Book Company. 1949.

6. Semran, K. T. Emissions of Fluorides from Industrial Processes: A Review. J. Air Pol. Control Assoc. *7*(2):92-108. August 1957.

7. Kirk-Othmer. Encyclopedia of Chemical Technology, Vol. V, 2nd Ed. New York, Interscience (John Wiley and Sons, Inc.), 1964. p. 561-567.

8. Wentzel, K. F. Fluoride Emissions in the Vicinity of Brickworks. Staub. *25*(3):45-50. March 1965.

9. Allen, G. L. et al. Control of Metallurgical and Mineral Dusts and Fumes in Los Angeles County. U. S. Department of Interior, Bureau of Mines. Washington, D.C. Information Circular Number 7627. April 1952.

10. Private communication between Resources Research, Inc. Reston, Va. and the State of New Jersey Air Pollution Control Program, Trenton. July 20, 1969.

8.4 CALCIUM CARBIDE MANUFACTURING

8.4.1 General

Calcium carbide (CaC_2) is manufactured by heating a lime and carbon mixture to 2,000 to 2,100°C (3,632 to 3,812°F) in an electric arc furnace. At those temperatures, the lime is reduced by carbon to calcium carbide and carbon monoxide, according to the following reaction:

$$CaO + 3C \rightarrow CaC_2 + CO$$

Lime for the reaction is usually made by reducing limestone in a kiln at the plant site. The sources of carbon for the reaction are petroleum coke, metallurgical coke or anthracite coal. Because impurities in the furnace charge remain in the calcium carbide product, the lime should contain no more than 0.5 percent each of magnesium oxide, aluminum oxide and iron oxide, and 0.004 percent phosphorous. Also, the coke charge should be low in ash and sulfur. Analyses indicate that 0.2 to 1.0 percent ash and 5 to 6 percent sulfur are typical in petroleum coke. About 991 kilograms (2,185 lb) of lime, 683 kilograms (1,506 lb) of coke, and 17 to 20 kilograms (37 to 44 lb) of electrode paste are required to produce one megagram (2,205 lb) of calcium carbide.

The process for manufacturing calcium carbide is illustrated in Figure 8.4-1. Moisture is removed from coke in a coke dryer, while limestone is converted to lime in a lime kiln. Fines from coke drying and lime operations are removed and may be recycled. The two charge materials are then conveyed to an electric arc furnace, the primary piece of equipment used to produce calcium carbide. There are two basic types of electric arc furnaces, the open furnace, in which the carbon monoxide burns to carbon dioxide when it contacts the air above the charge, and the closed furnace, in which the gas is collected from the furnace and either used as fuel for other processes or flared. Electrode paste composed of coal tar pitch binder and

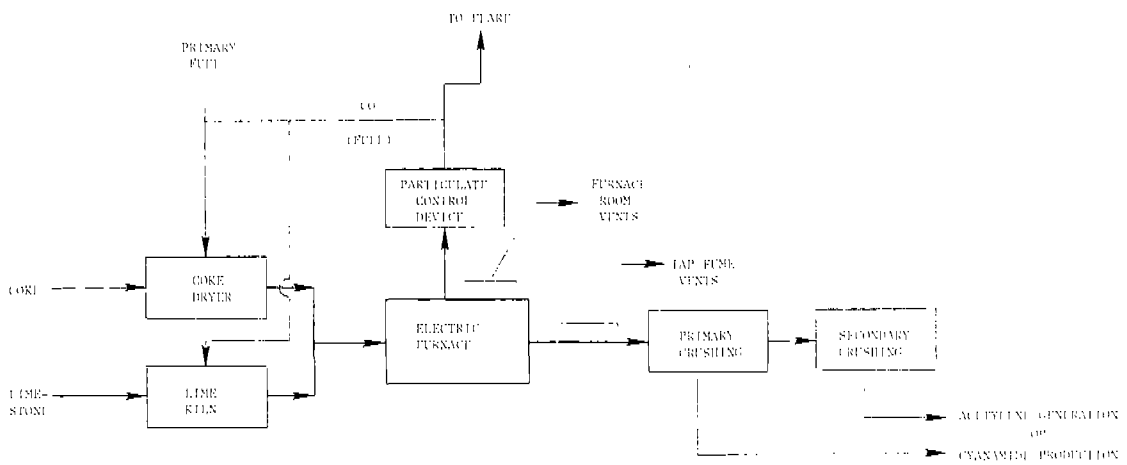

Figure 8.4-1. Calcium carbide manufacturing process.

anthracite coal is continuously fed into a steel casing where it is baked by heat from the electric arc furnace before introduction into the furnace. The baked electrode exits the steel casing just inside the furnace cover and is consumed in the calcium carbide production process. Molten calcium carbide is tapped continuously from the furnace into chill cars and is allowed to cool and solidify. Then, primary crushing of the solidified calcium carbide by jaw crushers is followed by secondary crushing and screening for size. To prevent explosion hazards from acetylene generated by reaction of calcium carbide with ambient moisture, crushing and screening operations may be performed in an air swept environment before the calcium carbide has completely cooled or may be carried out in an inert atmosphere. The calcium carbide product is used primarily in acetylene generation and also as a desulfurizer of iron.

8.4.2 Emissions and Controls

Emissions from calcium carbide manufacturing include particulate matter, sulfur oxides, carbon monoxide and hydrocarbons. Particulate matter is emitted from a variety of equipment and operations in the production of calcium carbide, including the coke dryer, lime kiln, electric furnace, tap fume vents, furnace room vents, primary and secondary crushers, and conveying equipment. (Lime kiln emission factors are presented in Section 8.15.) Particulate matter emitted from process sources such as the electric furnace are ducted to a particulate control device, usually fabric filters and wet scrubbers. Fugitive particulate matter from sources such as tapping operations, furnace room and conveyors is captured and sent to a particulate control device. The composition of the particulate matter emissions varies according to the specific equipment or operation, but the primary components are magnesium, calcium and carbon compounds. Sulfur oxides are emitted by the electric furnace from volatilization and oxidation of sulfur in the coke feed and by the coke dryer and lime kiln from fuel combustion. These process sources are not controlled specifically for sulfur oxide emissions. Carbon monoxide is a byproduct of calcium carbide formation in the electric furnace. Carbon monoxide emissions to the atmosphere are usually negligible. In open furnaces, carbon monoxide is oxidized to carbon dioxide, thus eliminating carbon monoxide emissions. In closed furnaces, a portion of the generated carbon monoxide is burned in the flames surrounding the furnace charge holes, and the remaining carbon monoxide is used as fuel for other processes or is flared. The only potential source of hydrocarbon emissions from the manufacture of calcium carbide is the coal tar pitch binder in the furnace electrode paste. Since the maximum volatiles content in the electrode paste is about 18 percent, the electrode paste represents only a small potential source of hydrocarbon emissions. In closed furnaces, actual hydrocarbon emissions from consumption of electrode paste typically are negligible due to high furnace operating temperature and flames surrounding the furnace charge holes. Hydrocarbon emissions from open furnaces are also expected to be negligible because of high furnace operating temperature and the presence of excess oxygen above the furnace.

Table 8.4-1 gives controlled and uncontrolled emission factors for various processes in the manufacture of calcium carbide. Controlled factors are based on test data and permitted emissions for operations with the fabric filters and wet scrubbers that are typically used to control particulate emissions in calcium carbide manufacturing.

TABLE 8.4-1. EMISSION FACTORS FOR CALCIUM CARBIDE MANUFACTURING PLANTS[a]

Process	Particulate Matter[b] Uncontrolled	Particulate Matter[b] Controlled[c]	Sulfur Oxides[d]	Emission Factor Rating
Electric furnace main stack[e]	12 (24)	0.39 (0.78)	1.5 (3.0)	B, C
Coke dryer	1.0 (2.0)	0.13 (0.26)	1.5 (3.0)	C
Tap fume vents	ND	0.07 (0.14)	0	C
Furnace room vents	13 (26)	0.07 (0.14)	0	C
Primary and secondary crushing	ND	0.57 (1.14)	0	C
Circular charging conveyor	ND	0.17 (0.34)	0	C

[a]Factors are in kg/Mg (lb/ton) of calcium carbide produced. ND - No data.

[b]Electric furnace: primarily magnesium compounds with small amounts of calcium, carbon, aluminum, iron, silicon compounds. Coke dryer: carbon compounds. Tap fume vents and furnace room vents: carbon, calcium, magnesium, silicon, iron compounds. Primary and secondary crushing: calcium carbide. Circular charging conveyor: lime, coke.

[c]Based on emissions data and not on assumed control efficiencies.

[d]Uncontrolled.

[e]Rating is B for particulate matter emission factor, C for sulfur oxides. Factors applicable to open furnaces using petroleum coke.

References for Section 8.4

1. "Permits to Operate: Airco Carbide, Louisville, Kentucky", Jefferson County Air Pollution Control District, Louisville, KY, December 16, 1980.

2. "Manufacturing or Processing Operations: Airco Carbide, Louisville, Kentucky", Jefferson County Air Pollution Control District, Louisville, KY, September 1975.

3. Written communication from A. J. Miles, Radian Corp., Durham, NC, to Douglas Cook, U. S. Environmental Protection Agency, Atlanta, GA, August 20, 1981.

4. "Furnace Offgas Emissions Survey: Airco Carbide, Louisville, Kentucky", Environmental Consultants, Inc., Clarksville, IN, March 17, 1975.

5. J. W. Frye, "Calcium Carbide Furnace Operation", Electric Furnace Conference Proceedings, American Institute of Mechanical Engineers, New York, December 9-11, 1970.

6. The Louisville Air Pollution Study, U. S. Department of Health and Human Services, Robert A. Taft Center, Cincinnati, OH, 1961.

7. R. N. Shreve and J. A. Brink, Jr., Chemical Process Industries, Fourth Edition, McGraw Hill Company, New York, 1977.

8. J. H. Stuever, "Particulate Emissions - Electric Carbide Furnace Test Report: Midwest Carbide, Pryor, Oklahoma", Stuever and Associates, Oklahoma City, OK, April 1978.

9. L. Thomsen, "Particulate Emissions Test Report: Midwest Carbide, Keokuk, Iowa", Beling Consultants, Inc., Moline, IL, July 1, 1980.

10. D. M. Kirkpatrick, "Acetylene from Calcium Carbide Is an Alternate Feedstock Route", Oil and Gas Journal, June 7, 1976.

11. L. Clarke and R. L. Davidson, Manual for Process Engineering Calculations, Second Edition, McGraw-Hill Company, New York, 1962.

8.5 CASTABLE REFRACTORIES

8.5.1 Process Description[1-3]

Castable or fused-cast refractories are manufactured by carefully blending such components as alumina, zirconia, silica, chrome, and magnesia; melting the mixture in an electric-arc furnace at temperatures of 3200 to 4500°F (1760 to 2480°C); pouring it into molds; and slowly cooling it to the solid state. Fused refractories are less porous and more dense than kiln-fired refractories.

8.5.2 Emissions and Controls[1]

Particulate emissions occur during the drying, crushing, handling, and blending of the components; during the actual melting process; and in the molding phase. Fluorides, largely in the gaseous form, may also be emitted during the melting operations.

The general types of particulate controls may be used on the materials handling aspects of refractory manufacturing. Emissions from the electric-arc furnace, however, are largely condensed fumes and consist of very fine particles. Fluoride emissions can be effectively controlled with a scrubber. Emission factors for castable refractories manufacturing are presented in Table 8.5-1.

Table 8.5-1. PARTICULATE EMISSION FACTORS FOR CASTABLE REFRACTORIES MANUFACTURING[a]
EMISSION FACTOR RATING: C

Type of process	Type of control	Uncontrolled		Controlled	
		lb/ton	kg/MT	lb/ton	kg/MT
Raw material dryer[b]	Baghouse	30	15	0.3	0.15
Raw material crushing and processing[c]	Scrubber			7	3.5
	Cyclone	120	60	45	22.5
Electric-arc melting[d]	Baghouse	50	25	0.8	0.4
	Scrubber			10	5
Curing oven[e]	–	0.2	0.1	–	–
Molding and shakeout[b]	Baghouse	25	12.5	0.3	0.15

[a]Fluoride emissions from the melt average about 1.3 pounds of HF per ton of melt (0.65 kg HF/MT melt). Emission factors expressed as units per unit weight of feed material.
[b]Reference 4.
[c]References 4 and 5.
[d]References 4 through 6.
[e]Reference 5.

References for Section 8.5

1. Air Pollutant Emission Factors. Final Report. Resources Research, Inc. Reston, Va. Prepared for National Air Pollution Control Administration, Durham, N.C., under Contract Number CPA-22-69-119. April 1970.

2. Brown, R. W. and K. H. Sandmeyer. Applications of Fused-Cast Refractories. Chem. Eng. *76*:106-114, June 16, 1969.

3. Shreve, R.N. Chemical Process Industries, 3rd Ed. New York, McGraw-Hill Book Company. 1967. p. 158.

4. Unpublished data provided by a Corhart Refractory. Kentucky Department of Health, Air Pollution Control Commission. Frankfort, Kentucky. September 1969.

5. Unpublished stack test data on refractories. Resources Research, Incorporated. Reston, Virginia. 1969.

6. Unpublished stack test data on refractories. Resources Research, Incorporated. Reston, Virginia. 1967.

8.6 PORTLAND CEMENT MANUFACTURING

8.6.1 Process Description [1-3]

Portland cement manufacture accounts for about 98 percent of the cement production in the United States. The more than 30 raw materials used to make cement may be divided into four basic components: lime (calcareous), silica (siliceous), alumina (argillaceous), and iron (ferriferous). Approximately 3200 pounds of dry raw materials are required to produce 1 ton of cement. Approximately 35 percent of the raw material weight is removed as carbon dioxide and water vapor. As shown in Figure 8.6-1, the raw materials undergo separate crushing after the quarrying operation, and, when needed for processing, are proportioned, ground, and blended using either the wet or dry process.

In the dry process, the moisture content of the raw material is reduced to less than 1 percent either before or during the grinding operation. The dried materials are then pulverized into a powder and fed directly into a rotary kiln. Usually, the kiln is a long, horizontal, steel cylinder with a refractory brick lining. The kilns are slightly inclined and rotate about the longitudinal axis. The pulverized raw materials are fed into the upper end and travel slowly to the lower end. The kilns are fired from the lower end so that the hot gases pass upward and through the raw material. Drying, decarbonating, and calcining are accomplished as the material travels through the heated kiln, finally burning to incipient fusion and forming the clinker. The clinker is cooled, mixed with about 5 percent gypsum by weight, and ground to the final product fineness. The cement is then stored for later packaging and shipment.

With the wet process, a slurry is made by adding water to the initial grinding operation. Proportioning may take place before or after the grinding step. After the materials are mixed, the excess water is removed and final adjustments are made to obtain a desired composition. This final homogeneous mixture is fed to the kilns as a slurry of 30 to 40 percent moisture or as a wet filtrate of about 20 percent moisture. The burning, cooling, addition of gypsum, and storage are carried out as in the dry process.

8.6.2 Emissions and Controls[1,2,4]

Particulate matter is the primary emission in the manufacture of portland cement. Emissions also include the normal combustion products of the fuel used to supply heat for the kiln and drying operations, including oxides of nitrogen and small amounts of oxides of sulfur.

Sources of dust at cement plants include: (1) quarrying and crushing, (2) raw material storage, (3) grinding and blending (dry process only), (4) clinker production, (5) finish grinding, and (6) packaging. The largest source of emissions within cement plants is the kiln operation, which may be considered to have three units: the feed system, the fuel-firing system, and the clinker-cooling and handling system. The most desirable method of disposing of the collected dust is injection into the burning zone of the kiln and production of clinkers from the dust. If the alkali content of the raw materials is too high, however, some of the dust is discarded or leached before returning to the kiln. In many instances, the maximum allowable alkali content of 0.6 percent (calculated as sodium oxide) restricts the amount of dust that can be recycled. Additional sources of dust emissions are raw material storage piles, conveyors, storage silos, and loading/unloading facilities.

The complications of kiln burning and the large volumes of materials handled have led to the adoption of many control systems for dust collection. Depending upon the emission, the temperature of the effluents in the

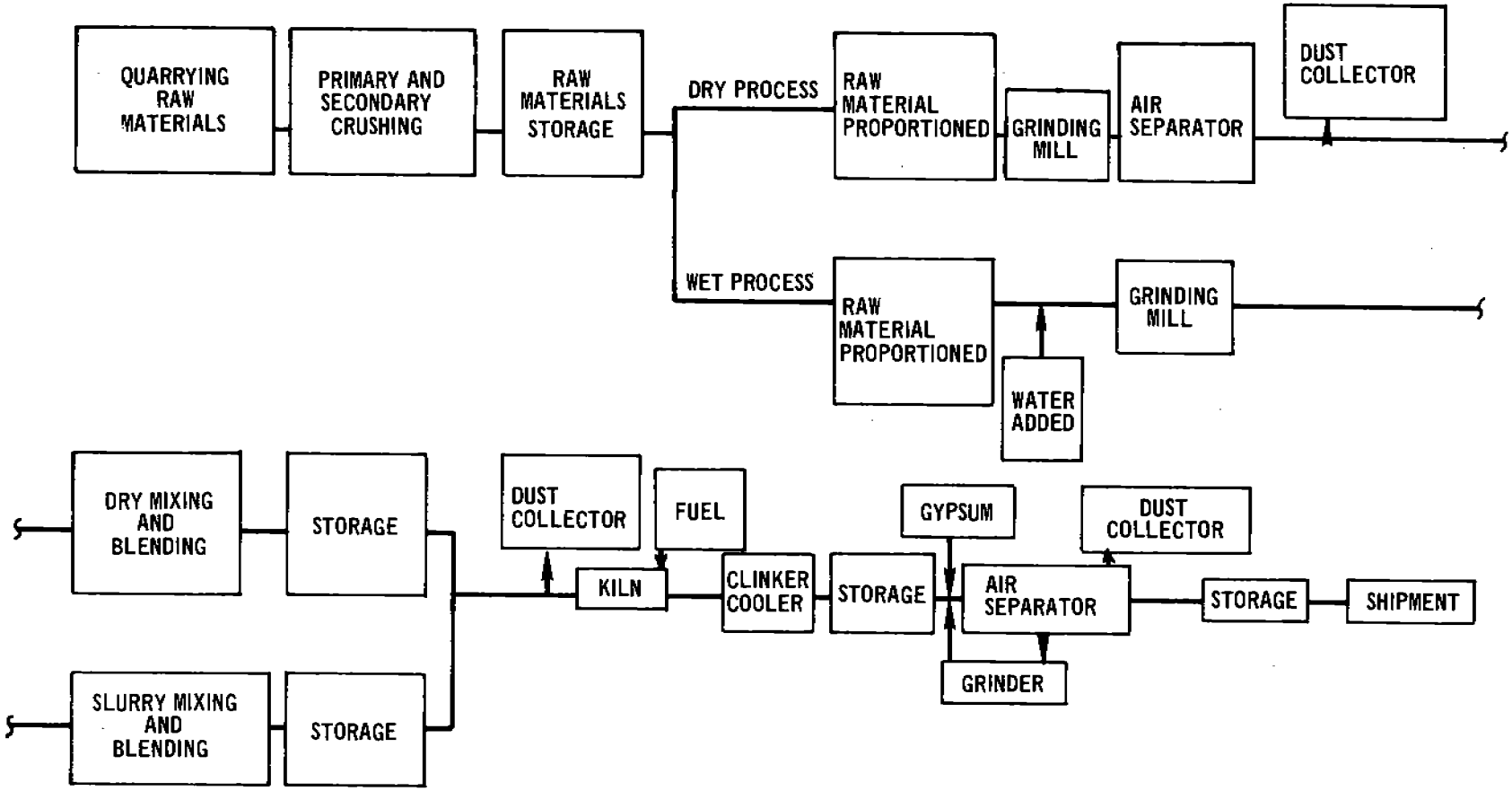

Figure 8.6-1. Basic flow diagram of portland cement manufacturing process.

plant in question, and the particulate emission standards in the community, the cement industry generally uses mechanical collectors, electrical precipitators, fabric filter (baghouse) collectors, or combinations of these devices to control emissions.

Table 8.6-1 summarizes emission factors for cement manufacturing and also includes in footnote d typical control efficiencies of particulate emissions. Table 8.6-2 indicates the particle size distribution for particulate emissions from kilns and cement plants before control systems are applied.

TABLE 8.6-1. EMISSION FACTORS FOR CEMENT MANUFACTURING WITHOUT CONTROLS[a,b,c,d]

EMISSION FACTOR RATING: B

Pollutant	Dry Process		Wet Process	
	Kilns	Dryers, grinders, etc.	Kilns	Dryers, grinders, etc.
Particulate[e]				
kg/Mg	122.0	48.0	114.0	16.0
lb/ton	245.0	96.0	228.0	32.0
Sulfur dioxide[f]				
Mineral source				
kg/Mg	5.1	-	5.1	-
lb/ton	10.2	-	10.2	-
Gas combustion				
kg/Mg	Neg[h]	-	Neg	-
lb/ton	Neg	-	Neg	-
Oil combustion				
kg/Mg	2.1S[i]	-	2.1S	-
lb/ton	4.2S	-	4.2S	-
Coal combustion				
kg/Mg	3.4S	-	3.4S	-
lb/ton	6.8S	-	6.8S	-
Nitrogen oxides				
kg/Mg	1.3	-	1.3	-
lb/ton	2.6	-	2.6	-
Lead				
kg/Mg	0.06	0.02	0.05	0.01
lb/ton	0.12	0.04	0.10	0.02

[a]One barrel of cement weighs 171 kg (376 pounds).
[b]These emission factors include emissions from fuel combustion, which should not be calculated separately.
[c]References 1-2.
[d]Emission factors expressed in weight per unit weight of cement produced. Dash indicates no available data.
[e]Typical collection efficiencies for kilns, dryers, grinders, etc., are: multicyclones, 80%; electrostatic precipitators, 95%; electrostatic precipitators with multicyclones, 97.5%; fabric filter units, 99.8%.
[f]The sulfur dioxide factors presented take into account the reactions with the alkaline dusts when no baghouses are used. With baghouses, approximately 50% more SO_2 is removed because of reactions with the alkaline particulate filter cake. Also note that the total SO_2 from the kiln is determined by summing emission contributions from the mineral source and the appropriate fuel.
[g]These emissions are the result of sulfur being present in the raw materials and are thus dependent upon source of the raw materials used. The 5.1 kg/Mg (10.2 lb/ton) factors account for part of the available sulfur remaining behind in the product because of its alkaline nature and affinity for SO_2.
[h]Negligible.
[i]S = % sulfur in fuel.
[j]References 7-8.

TABLE 8.6-2. SIZE DISTRIBUTION OF DUST EMITTED FROM UNCONTROLLED KILN OPERATIONS[1,5]

Particle size, microns	Kiln dust finer than corresponding particle size,%
60	93
50	90
40	84
30	74
20	58
10	38
5	23
1	3

Sulfur dioxide may be generated from the sulfur compounds in the ores as well as from combusion of fuel. The sulfur content of both ores and fuels will vary from plant to plant and with geographic location. The alkaline nature of the cement, however, provides for direct absorption of SO_2 into the product. The overall control inherent in the process is approximately 57 percent or greater of the available sulfur in ore and fuel if a baghouse that allows the SO_2 to come in contact with the cement dust is used. Control, of course, will vary according to the alkali and sulfur content of the raw materials and fuel.[6]

References for Section 8.6

1. T. E. Kreichelt, D. A. Kemnitz, and S. T. Cuffe, Atmospheric Emissions from the Manufacture of Portland Cement, U.S. DHEW, Public Health Service, Cincinnati, OH, PHS Publication Number 999-AP-17, 1967.

2. Unpublished standards of performance for new and substantially modified portland cement plants, U.S. Environmental Protection Agency, Bureau of Stationary Source Pollution Control, Research Triangle Park, NC, August 1971.

3. A Study of the Cement Industry in the State of Missouri, Resources Research Inc., Reston, VA, prepared for the Air Conservation Commission of the State of Missouri, December 1967.

4. Standards of Performance for New Stationary Sources, U.S. Environmental Protection Agency, Federal Register 36(247,Pt II): December 23, 1971.

5. Particulate Pollutant System Study, Midwest Research Institute, Kansas City, MO, prepared for U.S. Environmental Protection Agency, Air Pollution Control Office, Research Triangle Park, NC, under Contract Number CPA-22-69-104, May 1971.

6. Restriction of Emissions from Portland Cement Works, VDI Richtlinien, Dusseldorf, Germany, February 1967.

7. Emission Tests Nos. 71-MM-02, 71-MM-03 and 71-MM-05, Office of Air Quality Planning and Standards, Research Triangle Park, NC, March-April 1972.

8. Control Techniques for Lead Air Emissions, EPA 450/2-77-012, U. S. Environmental Protection Agency, Research Triangle Park, NC, December 1972.

8.7 CERAMIC CLAY MANUFACTURING

8.7.1 Process Description[1]

The manufacture of ceramic clay involves the conditioning of the basic ores by several methods. These include the separation and concentration of the minerals by screening, floating, wet and dry grinding, and blending of the desired ore varieties. The basic raw materials in ceramic clay manufacture are kaolinite ($Al_2O_3 \cdot 2SiO_2 \cdot 2H_2O$) and montmorillonite [(Mg, Ca) $O \cdot Al_2O_3 \cdot 5SiO_2 \cdot nH_2O$] clays. These clays are refined by separation and bleaching, blended, kiln-dried, and formed into such items as whiteware, heavy clay products (brick, etc.), various stoneware, and other products such as diatomaceous earth, which is used as a filter aid.

8.7.2 Emissions and Controls[1]

Emissions consist primarily of particulates, but some fluorides and acid gases are also emitted in the drying process. The high temperatures of the firing kilns are also conducive to the fixation of atmospheric nitrogen and the subsequent release of NO, but no published information has been found for gaseous emissions. Particulates are also emitted from the grinding process and from storage of the ground product.

Factors affecting emissions include the amount of material processed, the type of grinding (wet or dry), the temperature of the drying kilns, the gas velocities and flow direction in the kilns, and the amount of fluorine in the ores.

Common control techniques include settling chambers, cyclones, wet scrubbers, electrostatic precipitators, and bag filters. The most effective control is provided by cyclones for the coarser material, followed by wet scrubbers, bag filters, or electrostatic precipitators for dry dust. Emission factors for ceramic clay manufacturing are presented in Table 8.7-1.

Table 8.7-1. PARTICULATE EMISSION FACTORS FOR CERAMIC CLAY MANUFACTURING[a]
EMISSION FACTOR RATING: A

Type of process	Uncontrolled		Cyclone[b]		Multiple-unit cyclone and scrubber[c]	
	lb/ton	kg/MT	lb/ton	kg/MT	lb/ton	kg/MT
Drying[d]	70	35	18	9	7	3.5
Grinding[e]	76	38	19	9.5	–	–
Storage[d]	34	17	8	4	–	–

[a]Emission factors expressed as units per unit weight of input to process.
[b]Approximate collection efficiency: 75 percent.
[c]Approximate collection efficiency: 90 percent.
[d]References 2 through 5.
[e]Reference 3.

References for Section 8.7-1

1. Air Pollutant Emission Factors. Final Report. Resources Research, Inc. Reston, Va. Prepared for National Air Pollution Control Administration, Durham, N.C., under Contract Number CPA-22-69-119. April 1970.

2. Allen, G. L. et al. Control of Metallurgical and Mineral Dusts and Fumes in Los Angeles County. Department of Interior, Bureau of Mines. Washington, D.C. Information Circular Number 7627. April 1952.

3. Private Communication between Resources Research, Incorporated, Reston, Virginia, and the State of New Jersey Air Pollution Control Program, Trenton, New Jersey. July 20, 1969.

4. Henn, J. J. et al. Methods for Producing Alumina from Clay: An Evaluation of Two Lime Sinter Processes. Department of Interior, Bureau of Mines. Washington, D.C. Report of Investigations Number 7299. September 1969.

5. Peters, F. A. et al. Methods for Producing Alumina from Clay: An Evaluation of the Lime-Soda Sinter Process. Department of Interior, Bureau of Mines. Washington, D.C. Report of Investigation Number 6927. 1967.

8.8 CLAY AND FLY-ASH SINTERING

8.8.1 Process Description[1]

Although the processes for sintering fly ash and clay are similar, there are some distinctions that justify a separate discussion of each process. Fly-ash sintering plants are generally located near the source, with the fly ash delivered to a storage silo at the plant. The dry fly ash is moistened with a water solution of lignin and agglomerated into pellets or balls. This material goes to a traveling-grate sintering machine where direct contact with hot combustion gases sinters the individual particles of the pellet and completely burns off the residual carbon in the fly ash. The product is then crushed, screened, graded, and stored in yard piles.

Clay sintering involves the driving off of entrained volatile matter. It is desirable that the clay contain a sufficient amount of volatile matter so that the resultant aggregate will not be too heavy. It is thus sometimes necessary to mix the clay with finely pulverized coke (up to 10 percent coke by weight).[2,3] In the sintering process the clay is first mixed with pulverized coke, if necessary, and then pelletized. The clay is next sintered in a rotating kiln or on a traveling grate. The sintered pellets are then crushed, screened, and stored, in a procedure similar to that for fly ash pellets.

8.8.2 Emissions and Controls[1]

In fly-ash sintering, improper handling of the fly ash creates a dust problem. Adequate design features, including fly-ash wetting systems and particulate collection systems on all transfer points and on crushing and screening operations, would greatly reduce emissions. Normally, fabric filters are used to control emissions from the storage silo, and emissions are low. The absence of this dust collection system, however, would create a major emission problem. Moisture is added at the point of discharge from the silo to the agglomerator, and very few emissions occur there. Normally, there are few emissions from the sintering machine, but if the grate is not properly maintained, a dust problem is created. The consequent crushing, screening, handling, and storage of the sintered product also create dust problems.

In clay sintering, the addition of pulverized coke presents an emission problem because the sintering of coke-impregnated dry pellets produces more particulate emissions than the sintering of natural clay. The crushing, screening, handling, and storage of the sintered clay pellets creates dust problems similar to those encountered in fly-ash sintering. Emission factors for both clay and fly-ash sintering are shown in Table 8.8-1.

Table 8.8-1. PARTICULATE EMISSION FACTORS FOR SINTERING OPERATIONS[a]
EMISSION FACTOR RATING: C

Type of material	Sintering operation[b]		Crushing, screening, and yard storage[b,c]	
	lb/ton	kg/MT	lb/ton	kg/MT
Fly ash[d]	110	55	e	e
Clay mixed with coke[f,g]	40	20	15	7.5
Natural clay[h,i]	12	6	12	6

[a]Emission factors expressed as units per unit weight of finished product.
[b]Cyclones would reduce this emission by about 80 percent. Scrubbers would reduce this emission by about 90 percent.
[c]Based on data in section on stone quarrying and processing.
[d]Reference 1.
[e]Included in sintering losses.
[f]90 percent clay, 10 percent pulverized coke; traveling-grate, single-pass, up-draft sintering machine.
[g]References 3 through 5.
[h]Rotary dryer sinterer.
[i]Reference 2.

References for Section 8.8

1. Air Pollutant Emission Factors. Final Report. Resources Research, Inc. Reston, Va. Prepared for National Air Pollution Control Administration, Durham, N.C., under Contract Number CPA-22-69-119. April 1970.

2. Communication between Resources Research, Incorporated, Reston, Virginia, and a clay sintering firm. October 2, 1969.

3. Communication between Resources Research, Incorporated, Reston, Virginia, and an anonymous Air Pollution Control Agency. October 16, 1969.

4. Henn, J. J. et al. Methods for Producing Alumina from Clay: An Evaluation of Two Lime Sinter Processes. Department of the Interior, Bureau of Mines. Washington, D.C. Report of Investigation Number 7299. September 1969.

5. Peters, F. A. et al. Methods for Producing Alumina from Clay: An Evaluation of the Lime-Soda Sinter Process. Department of the Interior, Bureau of Mines. Washington, D.C. Report of Investigation Number 6927. 1967.

8.9 COAL CLEANING

8.9.1 Process Description[1,2]

Coal cleaning is a process by which impurities such as sulfur, ash and rock are removed from coal to upgrade its value. Coal cleaning processes are categorized as either physical cleaning or chemical cleaning. Physical coal cleaning processes, the mechanical separation of coal from its contaminants using differences in density, are by far the major processes in use today. Chemical coal cleaning processes are not commercially practical and are therefore not included in this discussion.

The scheme used in physical coal cleaning processes varies among coal cleaning plants but can generally be divided into four basic phases: initial preparation, fine coal processing, coarse coal processing, and final preparation. A sample process flow diagram for a physical coal cleaning plant is presented in Figure 8.9-1.

In the initial preparation phase of coal cleaning, the raw coal is unloaded, stored, conveyed, crushed, and classified by screening into coarse and fine coal fractions. The size fractions are then conveyed to their respective cleaning processes.

Fine coal processing and coarse coal processing use very similar operations and equipment to separate the contaminants. The primary differences are the severity of operating parameters. The majority of coal cleaning processes use upward currents or pulses of a fluid such as water to fluidize a bed of crushed coal and impurities. The lighter coal particles rise and are removed from the top of the bed. The heavier impurities are removed from the bottom. Coal cleaned in the wet processes then must be dried in the final preparation processes.

Final preparation processes are used to remove moisture from coal, thereby reducing freezing problems and weight, and raising the heating value. The first processing step is dewatering, in which a major portion of the water is removed by the use of screens, thickeners and cyclones. The second step is normally thermal drying, achieved by any one of three dryer types: fluidized bed, flash and multilouvered. In the fluidized bed dryer, the coal is suspended and dried above a perforated plate by rising hot gases. In the flash dryer, coal is fed into a stream of hot gases, for instantaneous drying. The dried coal and wet gases are drawn up a drying column and into a cyclone for separation. In the multilouvered dryer, hot gases are passed through a falling curtain of coal. The coal is raised by flights of a specially designed conveyor.

8.9.2 Emissions and Controls[1,2]

Emissions from the initial coal preparation phase of either wet or dry processes consist primarily of fugitive particulates, as coal dust, from roadways, stock piles, refuse areas, loaded railroad cars, conveyor

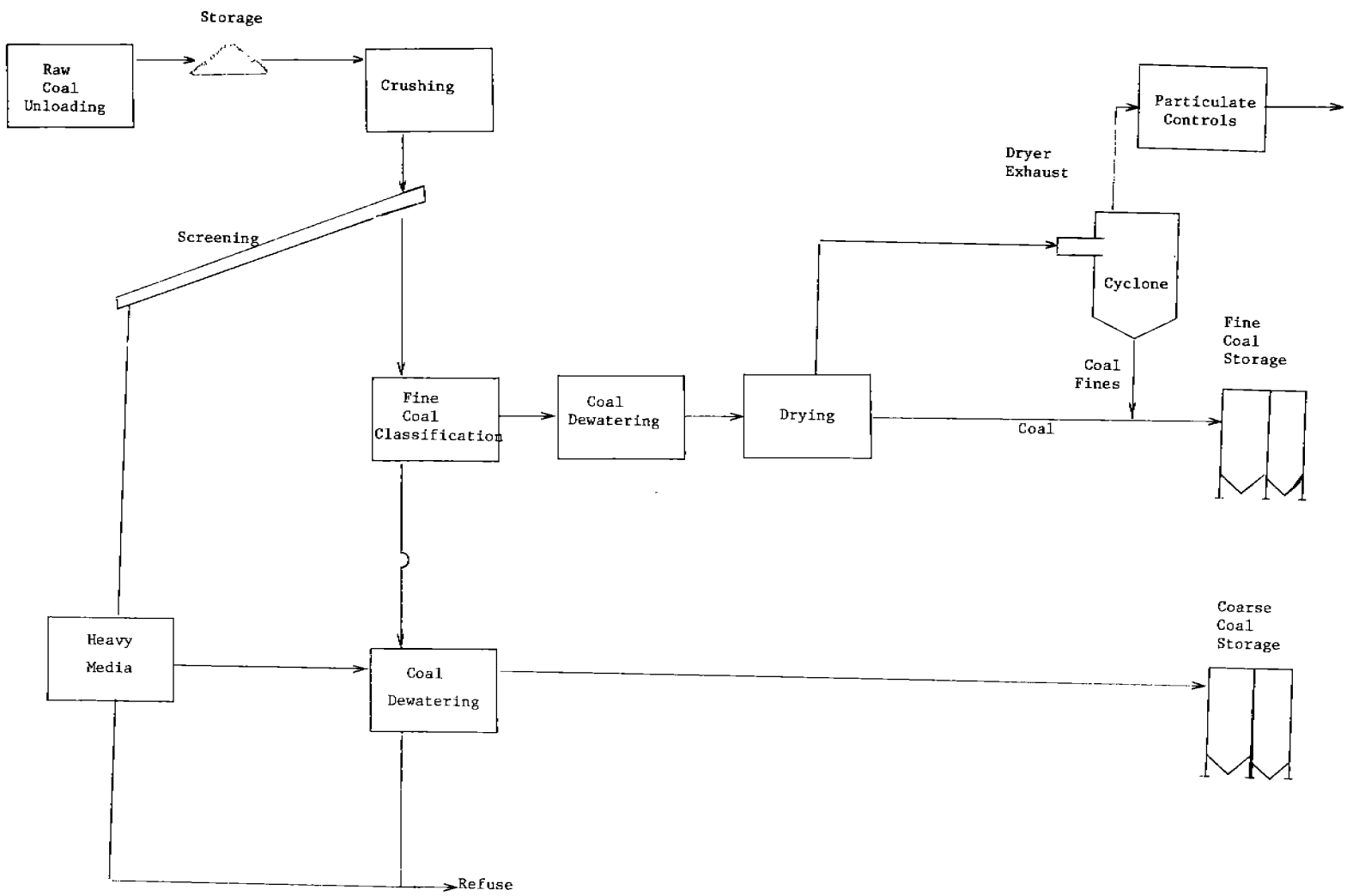

Figure 8.9-1. Typical coal cleaning plant process flow diagram.

belt pouroffs, crushers, and classifiers. The major control technique used to reduce these emissions is water wetting. Another technique applicable to unloading, conveying, crushing, and screening operations involves enclosing the process area and circulating air from the area through fabric filters.

Table 8.9-1. EMISSION FACTORS FOR COAL CLEANING[a]

EMISSION FACTOR RATING: B

Operation / Pollutant	Fluidized Bed		Flash		Multilouvered	
	lb/ton	kg/MT	lb/ton	kg/MT	lb/ton	kg/MT
Particulates						
Before Cyclone	20[b]	10[b]	16[b]	8[b]	25[c]	13[c]
After Cyclone[d]	12[e]	6[e]	10[f]	5[f]	8[c]	4[c]
After Scrubber	0.09[e]	0.05[e]	0.4[f]	0.2[f]	0.1[f]	0.05[c]
SO_2[g]						
After Cyclone	0.43[h]	0.22[h]	-[i]	-	-	-
After Scrubber	0.25	0.13	-	-	-	-
NO_x[j]						
After Scrubber	0.14	0.07	-	-	-	-
VOC[k]						
After Scrubber	0.10	0.05	-	-	-	-

[a]Emission factors expressed as units per weight of coal dried.
[b]References 3 and 4.
[c]Reference 5.
[d]Cyclones are standard pieces of process equipment for product collection.
[e]References 6, 7, 8, 9 and 10.
[f]Reference 1.
[g]References 7 and 8. The control efficiency of venturi scrubbers on SO_2 emissions depends on the inlet SO_2 loading, ranging from 70 to 80% removal for low sulfur coals (.7% S) down to 40 to 50% removal for high sulfur coals (3% S).
[h]References 7, 8 and 9.
[i]Not available.
[j]Reference 8. The control efficiency of venturi scrubbers on NO_x emissions is approximately 10 to 25%.
[k]Volatile organic compounds as lbs of carbon/ton of coal dried.

The major emission source in the fine or coarse coal processing phases is the air exhaust from the air separation processes. For the dry cleaning process, this is where the coal is stratified by pulses of air. Particulate emissions from this source are normally controlled with cyclones followed by fabric filters. Potential emissions from wet cleaning processes are very low.

The major source of emissions from the final preparation phase is the thermal dryer exhaust. This emission stream contains coal particles entrained in the drying gases, in addition to the standard products of coal combustion resulting from burning coal to generate the hot gases. Factors for these emissions are presented in Table 8.9-1. The most common technologies used to control this source are venturi scrubbers and mist eliminators downstream from the product recovery cyclones. The particulate control efficiency of these technologies ranges from 98 to 99.9 percent. The venturi scrubbbers also have an NO_x removal efficiency of 10 to 25 percent, and an SO_2 removal efficiency ranging from 70 to 80 percent for low sulfur coals to 40 to 50 percent for high sulfur coals.

References for Section 8.9

1. Background Information for Establishment of National Standards of Performance for New Sources: Coal Cleaning Industry, Environmental Engineering, Inc., Gainesville, FL, EPA Contract No. CPA-70-142, July 1971.

2. Air Pollutant Emissions Factors, National Air Pollution Control Administration, Contract No. CPA-22-69-119, Resources Research Inc., Reston, VA, April 1970.

3. Stack Test Results on Thermal Coal Dryers (Unpublished), Bureau of Air Pollution Control, Pennsylvania Department of Health, Harrisburg, PA.

4. "Amherst's Answer to Air Pollution Laws", Coal Mining and Processing, 7(2):26-29, February 1970.

5. D. W. Jones, "Dust Collection at Moss No. 3", Mining Congress Journal, 55(7):53-56, July 1969.

6. Elliott Northcott, "Dust Abatement at Bird Coal", Mining Congress Journal, 53:26-29, November 1967.

7. Richard W. Kling, Emissions from the Island Creek Coal Company Coal Processing Plant, York Research Corporation, Stamford, CT, February 14, 1972.

8. Coal Preparation Plant Emission Tests, Consolidation Coal Company, Bishop, West Virginia, EPA Contract No. 68-02-0233, Scott Research Laboratories, Inc., Plumsteadville, PA, November 1972.

9. Coal Preparation Plant Emission Tests, Westmoreland Coal Company, Wentz Plant, EPA Contract No. 68-02-0233, Scott Research Laboratories, Inc., Plumsteadville, PA, April 1972.

10. Background Information for Standards of Performance: Coal Preparation Plants, Volume 2: Test Data Summary, EPA-450/2-74-021b, U. S. Environmental Protection Agency, Research Triangle Park, NC, October 1974.

8.10 CONCRETE BATCHING

8.10.1 Process Description[1-3]

Concrete batching involves the proportioning of sand, gravel, and cement by means of weigh hoppers and conveyors into a mixing receiver such as a transit mix truck. The required amount of water is also discharged into the receiver along with the dry materials. In some cases, the concrete is prepared for on-site building construction work or for the manufacture of concrete products such as pipes and prefabricated construction parts.

8.10.2 Emissions and Controls[1]

Particulate emissions consist primarily of cement dust, but some sand and aggregate gravel dust emissions do occur during batching operations. There is also a potential for dust emissions during the unloading and conveying of concrete and aggregates at these plants and during the loading of dry-batched concrete mix. Another source of dust emissions is the traffic of heavy equipment over unpaved or dusty surfaces in and around the concrete batching plant.

Control techniques include the enclosure of dumping and loading areas, the enclosure of conveyors and elevators, filters on storage bin vents, and the use of water sprays. Table 8.10-1 presents emission factors for concrete batch plants.

Table 8.10-1. PARTICULATE EMISSION FACTORS FOR CONCRETE BATCHING[a] EMISSION FACTOR RATING: C

Concrete batching[b]	Emission	
	lb/yd^3 of concrete	kg/m^3 of concrete
Uncontrolled	0.2	0.12
Good control	0.02	0.012

[a]One cubic yard of concrete weighs 4000 pounds (1 m^3 = 2400 kg). The cement content varies with the type of concrete mixed, but 735 pounds of cement per yard (436 kg/m^3) may be used as a typical value.

[b]Reference 4.

References for Section 8.10

1. Air Pollutant Emission Factors. Final Report. Resources Research Inc. Reston, Va. Prepared for National Air Pollution Control Administration, Durham, N.C., under Contract Number CPA-22-69-119. April 1970.

2. Vincent, E. J. and J. L. McGinnity. Concrete Batching Plants. In: Air Pollution Engineering Manual. Danielson, J. A. (ed.). U.S. DHEW, PHS, National Center for Air Pollution Control. Cincinnati, Ohio. PHS Publication Number 999-AP-40. 1967. p. 334-335.

3. Communication between Resources Research, Incorporated, Reston, Virginia, and the National Ready-Mix Concrete Association. September 1969.

4. Allen, G. L. et al. Control of Metallurgical and Mineral Dusts and Fumes in Los Angeles County. Department of the Interior, Bureau of Mines. Washington, D.C. Information Circular Number 7627. April 1952.

8.11 GLASS FIBER MANUFACTURING

8.11.1 General

Glass fiber manufacturing is the high temperature conversion of various raw materials (predominantly borosilicates) into a homogeneous melt, followed by the fabrication of this melt into glass fibers. The two basic types of glass fiber products, textile and wool, are manufactured by similar processes. A typical diagram of these processes is shown in Figure 8.11-1. Glass fiber production can be segmented into three phases: raw materials handling, glass melting and refining, and fiber forming and finishing, this last phase being slightly different in textile and the wool glass fiber production.

Raw Materials Handling - The primary component of glass fiber is sand, but it also includes varying quantities of feldspar, sodium sulfate, anhydrous borax, boric acid, and many other materials. The bulk supplies are received by rail car and truck, and the lesser volume supplies are received in drums and packages. These raw materials are unloaded by a variety of methods, including drag shovels, vacuum systems and vibrator/gravity systems. Conveying to and from storage piles and silos is accomplished by belts, screws and bucket elevators. From storage, the materials are weighed according to the desired product recipe and then blended well before their introduction into the melting unit. The weighing, mixing and charging operations may be conducted in either batch or continuous mode.

Glass Melting And Refining - In the glass melting furnace, the raw materials are heated to temperatures ranging from 1500° to 1700°C (2700° to 3100°F) and are transformed through a sequence of chemical reactions to molten glass. Although there are many furnace designs, furnaces are generally large, shallow and well insulated vessels which are heated from above. In operation, raw materials are introduced continuously on top of a bed of molten glass, where they slowly mix and dissolve. Mixing is effected by natural convection, gases rising from chemical reactions, and in some operations, by air injection into the bottom of the bed.

Glass melting furnaces can be categorized, by their fuel source and method of heat application, into four types: recuperative, regenerative, unit, and electric melter. The recuperative, regenerative, and unit melter furnaces can be fueled by either gas or oil. The current trend is from gas fired to oil fired. Recuperative furnaces use a steel heat exchanger, recovering heat from the exhaust gases by exchange with the combustion air. Regenerative furnaces use a lattice of brickwork to recover waste heat from exhaust gases. In the initial mode of operation, hot exhaust gases are routed through a chamber containing a brickwork lattice, while combustion air is heated by passage through another corresponding brickwork lattice. About every twenty minutes, the air flow is reversed, so that the combustion air is always being passed through hot brickwork previously heated by exhaust gases. Electric furnaces melt glass by passing an electric current through the melt. Electric furnaces are either hot top or cold top. The former use gas for auxiliary heating, and the latter use only the electric current.

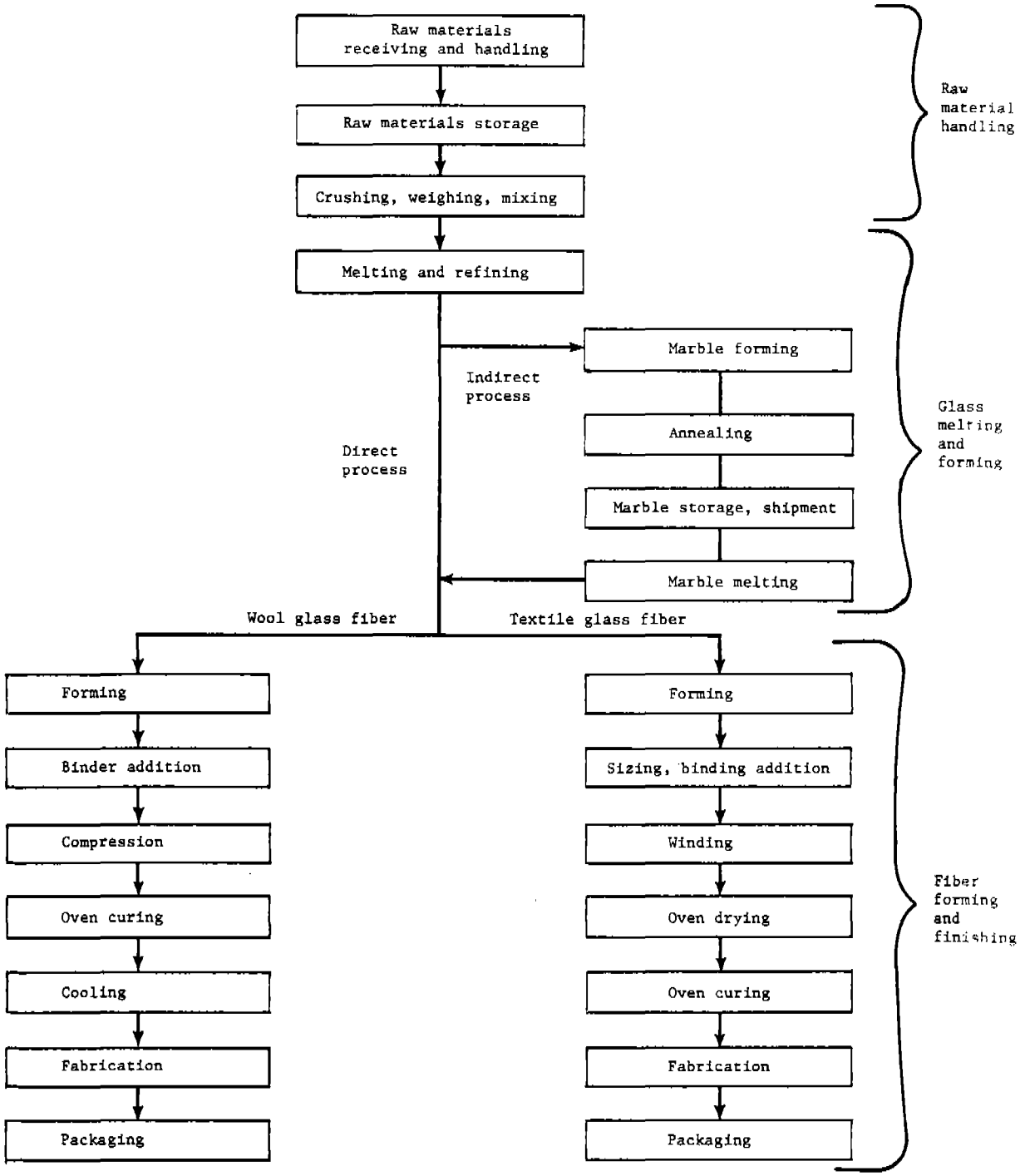

Figure 8.11-1. Typical flow diagram of the glass fiber production process.

Electric furnaces are currently used only for wool glass fiber production, because of the electrical properties of the glass formulation. Unit melters are used only for the "indirect" marble melting process, getting raw materials from a continuous screw at the back of the furnace adjacent to the exhaust air discharge. There are no provisions for heat recovery with unit melters.

In the "indirect" melting process, molten glass passes to a forehearth, where it is drawn off, sheared into globs, and formed into marbles by roll forming. The marbles are then stress relieved in annealing ovens, cooled, and conveyed to storage or to other plants for later use. In the "direct" glass fiber process, molten glass passes from the furnace into a refining unit, where bubbles and particles are removed by settling, and the melt is allowed to cool to the proper viscosity for the fiber forming operation.

Wool Glass Fiber Forming And Finishing - Wool fiberglass is produced for insulation and is formed into mats that are cut into batts. (Loose wool is primarily a waste product formed from mat trimming, although some is a primary product, and is only a small part of the total wool fiberglass produced. No specific emission data for loose wool production are available.) The insulation is used primarily in the construction industry and is produced to comply with ASTM C167-64, the "Standard Test Method for Thickness and Density of Blanket or Batt Type Thermal Insulating Material."[2]

Wool fiberglass insulation production lines usually consist of the following processes: (1) preparation of molten glass, (2) formation of fibers into a wool fiberglass mat, (3) curing the binder coated fiberglass mat, (4) cooling the mat, and (5) backing, cutting and packaging the insulation. Fiberglass plants contain various sizes, types, and numbers of production lines, although a typical plant has three lines. Backing (application of a flat flexible material, usually paper, glued to the mat), cutting and packaging operations are not significant sources of emissions to the atmosphere.

The trimmed edge waste from the mat and the fibrous dust generated during the cutting and packaging operations are collected by a cyclone and are either transported to a hammer mill to be chopped into blown wool (loose insulation) and bulk packaged or recycled to the forming section and blended with newly forming product.

During the formation of fibers into a wool fiberglass mat (the process known as forming in the industry), glass fibers are made from molten glass, and a chemical binder is simultaneously sprayed on the fibers as they are created. The binder is a thermosetting resin that holds the glass fibers together. Although the binder composition varies with product type, typically the binder consists of a solution of phenol-formaldehyde resin, water, urea, lignin, silane and ammonia. Coloring agents may also be added to the binder. Two methods of creating fibers are used by the industry. In the rotary spin process, depicted in Figure 8.11-2, centrifugal force causes molten glass to flow through small holes in the wall of a rapidly rotating cylinder to create fibers that are broken into pieces by an air stream. This is the newer of the two processes and dominates the industry today. In the flame attenuation process, molten glass flows by gravity from a furnace through numerous small orifices to create threads that are then

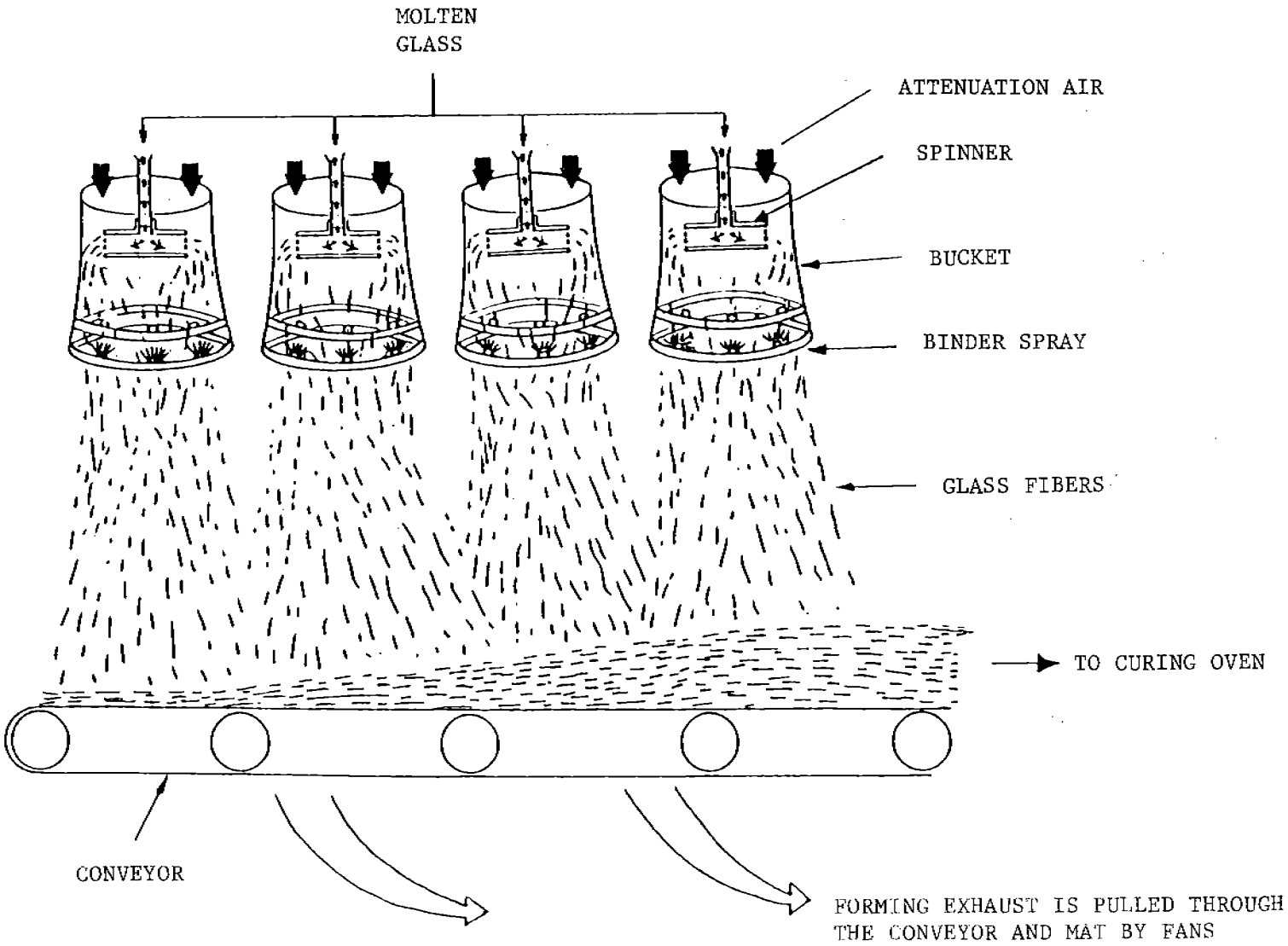

Figure 8.11-2. A typical rotary spin process.

attenuated (stretched to the point of breaking) by high velocity, hot air and/or a flame. After the glass fibers are created (by either process) and sprayed with the binder solution, they are collected by gravity on a conveyor belt in the form of a mat.

The conveyor carries the newly formed mat through a large oven for curing of the thermosetting binder and then through a cooling section where ambient air is drawn down through the mat. Figure 8.11-3 presents a schematic drawing of the curing and cooling sections. The cooled mat remains on the conveyor for trimming of the uneven edges. Then, if product specifications require it, a backing is applied with an adhesive to form a vapor barrier. The mat is then cut into batts of the desired dimensions and packaged.

Textile Glass Fiber Forming And Finishing - Molten glass from either the direct melting furnace or the indirect marble melting furnace is temperature regulated to a precise viscosity and delivered to forming stations. At the forming stations, the molten glass is forced through heated platinum bushings containing numerous very small orifices. The continuous fibers emerging from the orifices are drawn over a roller applicator which applies a coating of water soluble sizing and/or coupling agent. The coated fibers are gathered and wound into a spindle. The spindles of glass fibers are next conveyed to a drying oven, where moisture is removed from the sizing and coupling agents. The spindles are then sent to an oven to cure the coatings. The final fabrication includes twisting, chopping, weaving and packaging of the fiber.

8.11.2 Emissions And Controls

Emissions and controls for glass fiber manufacturing can be categorized by the three production phases with which they are associated. Emission factors for the glass fiber manufacturing industry are given in Tables 8.11-1 and 8.11-2.

Raw Materials Handling - The major emissions from the raw materials handling phase are fugitive dust and raw material particles generated at each of the material transfer points. Such a point would be where sand pours from a conveyor belt into a storage silo. The two major control techniques are wet or very moist handling and fabric filters. When fabric filters are used, the transfer points are enclosed, and air from the transfer area is continuously circulated through the fabric filters.

Glass Melting And Refining - The emissions from glass melting and refining include volatile organic compounds from the melt, raw material particles entrained in the furnace flue gas and, if furnaces are heated with fossil fuels, combustion products. The variation in emission rates among furnaces is attributable to varying operating temperature, raw material composition, fuels, and flue gas flow rates. Electric furnaces generally have the lowest emission rates, because of the lack of combustion products and of the lower temperature of the melt surface caused by bottom heating. Emission control for furnaces is primarily fabric filtration. Fabric filters are effective on particulates and SO_x and, to a lesser extent, on CO, NO_x and fluorides. Efficiency on these compounds is attributable to both condensation on filterable particulates and chemical reaction with particulates

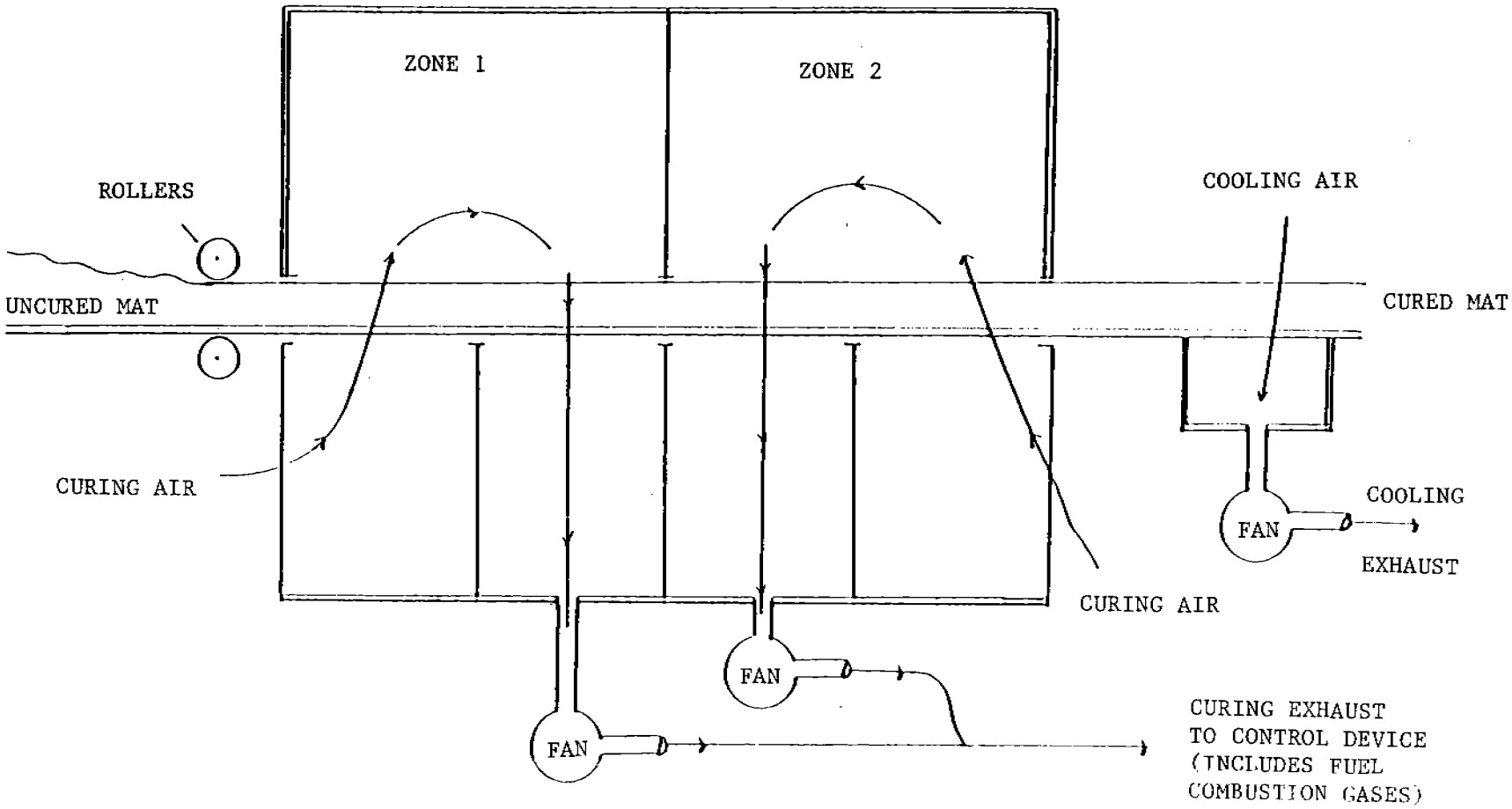

Figure 8.11-3. Side view of curing oven (indirect heating) and cooling section.

trapped on the filters. Reported fabric filter efficiencies on regenerative and recuperative wool furnaces are for particulates, 95+ percent; SO_x, 99+ percent; CO, 30 percent; and fluoride, 91 to 99 percent. Efficiencies on other furnaces are lower because of lower emission loading and pollutant characteristics.

Wool Fiber Forming And Finishing - Emissions generated during the manufacture of wool fiberglass insulation include solid particles of glass and binder resin, droplets of binder, and components of the binder that have vaporized. Glass particles may be entrained in the exhaust gas stream during forming, curing or cooling operations. Test data show that approximately 99 percent of the total emissions from the production line is emitted from the forming and curing sections. Even though cooling emissions are negligible at some plants, cooling emissions at others may include fugitives from the curing section. This commingling of emissions occurs because fugitive emissions from the open terminal end of the curing oven may be induced into the cooling exhaust ductwork and be discharged into the atmosphere. Solid particles of resin may be entrained in the gas stream in either the curing or cooling sections. Droplets of organic binder may be entrained in the gas stream in the forming section or may be a result of condensation of gaseous pollutants as the gas stream is cooled. Some of the liquid binder used in the forming section is vaporized by the elevated temperatures in the forming and curing processes. Much of the vaporized material will condense when the gas stream cools in the ductwork or in the emission control device.

Particulate matter is the principal pollutant that has been identified and measured at wool fiberglass insulation manufacturing facilities. It was known that some fraction of the particulate emissions results from condensation of organic compounds used in the binder. Therefore, in evaluating emissions and control device performance for this source, a sampling method, EPA Reference Method 5E, was used that permitted collection and measurement of both solid particles and condensed particulate material.[3]

Tests were performed during the production of R-11 building insulation, R-19 building insulation, ductboard and heavy density insulation.[4] These products, which account for 91 percent of industry production, had densities ranging from 9.1 to 12.3 kilograms per cubic meter (kg/m^3) for R-11, 8.2 to 9.3 kg/m^3 for R-19, and 54.5 to 65.7 kg/m^3 for ductboard. The heavy density insulation had a density of 118.5 kg/m^3. (The remaining 9 percent of industry wool fiberglass production is a variety of specialty products for which qualitative and quantitative information is not available.) The loss on ignition (LOI) of the product is a measure of the amount of binder present. The LOI values ranged from 3.9 to 6.5 percent, 4.5 to 4.6 percent, and 14.7 to 17.3 percent, respectively. The LOI for heavy density is 10.6 percent. A production line may be used to manufacture more than one of these product types because the processes involved do not differ. Although the data base did not show sufficient differences in mass emission levels to establish separate emission standards for each product, the uncontrolled emission factors are sufficiently different to warrant their segregation for AP-42.

The level of emissions control found in the wool fiberglass insulation manufacturing industry ranges from uncontrolled to control of forming, curing

TABLE 8.11-1. EMISSION FACTORS FOR GLASS FIBER MANUFACTURING WITHOUT CONTROLS[a]

EMISSION FACTOR RATING: B

	Particulates		SO_x		CO		NO_x		VOC[b]		Flourides	
	lb/ton	kg/Mg	lb/ton	kg/Mg	lb/ton	kg/Mg	lb/ton	kg/Mg	lb/ton	kg/Mg	lb/ton	kg/Mg
Unloading and conveying[c]	3.0	1.5	d	d	d	d	d	d	d	d	d	d
Storage bins[c]	0.2	0.1	d	d	d	d	d	d	d	d	d	d
Mixing and weighing[c]	0.6	0.3	d	d	d	d	d	d	d	d	d	d
Crushing and batch charging[c]	Neg	Neg	d	d	d	d	d	d	d	d	d	d
Glass furnace - wool												
Electric	0.5	0.25	0.04	0.02	0.05	0.025	0.27	0.14	e	e	0.002	0.001
Gas-regenerative	22	11	10	5	0.25	0.13	5	2.5	e	e	0.12	0.06
Gas-recuperative	25-30	13-15	10	5	0.25	0.13	1.7	0.85	e	e	0.11	0.06
Gas-unit melter	9	4.5	0.6	0.3	0.25	0.13	0.3	0.15	e	e	0.12	0.06
Glass furnace - textile												
Recuperative	2	1	3	1.5	0.5	0.25	20	10	d	d	2	1
Regenerative	16	8	30	15	1	0.5	20	10	d	d	2	1
Unit melter	6	3	e	e	0.9	0.45	20	10	d	d	2	1
Forming - wool												
Flame attenuation	2	1	d	d	d	d	d	d	0.3	0.15	e	e
Forming - textile	1	0.5	d	d	d	d	d	d	Neg	Neg	d	d
Oven curing - wool												
Flame attenuation	6	3	e	e	3.5	1.8	2	1	7	3.5	e	e
Oven curing and cooling - textile	1.2	0.6	d	d	1.5	0.75	2.6	1.3	Neg	Neg	d	d

[a]Expressed as units per unit weight of raw material processed. Neg = negligible.
[b]Includes primarily phenols and aldehydes, and to a lesser degree, methane.
[c]Reference 1.
[d]Not applicable.
[e]No data are available.

and cooling emissions from a line. The exhausts from these process operations may be controlled separately or in combination. Control technologies currently used by the industry include wet ESPs, low and high pressure drop wet scrubbers, low and high temperature thermal incinerators, high velocity air filters, and process modifications. These added control technologies are available to all firms in the industry, but the process modifications used in this industry are considered confidential. Wet ESPs are considered to be best demonstrated technology for the control of emissions from wool fiberglass insulation manufacturing lines.[4] Therefore, it is expected that most new facilities will be controlled in this manner.

Textile Fiber Forming And Finishing - Emissions from the forming and finishing processes include glass fiber particles, resin particles, hydrocarbons (primarily phenols and aldehydes), and combustion products from dryers and ovens. Emissions are usually lower in the textile fiber glass process than in the wool fiberglass process because of lower turbulence in the forming step, roller application of coatings, and use of much less coating per ton of fiber produced.

TABLE 8.11-2. UNCONTROLLED EMISSION FACTORS FOR ROTARY SPIN WOOL GLASS FIBER MANUFACTURING[a]

EMISSION FACTOR RATING: B

	Particulate			Organic compounds[b]		
Products	Front half	Back half	Total	Phenolics[c]	Phenol	Formaldehyde
R-19	17.81 (36.21)	4.25 (8.52)	22.36 (44.72)	3.21 (6.92)	0.96 (1.92)	0.75 (1.50)
R-11	19.61 (39.21)	3.19 (6.37)	22.79 (45.59)	6.21 (12.41)	0.92 (1.84)	1.23 (2.46)
Ductboard	27.72 (55.42)	8.55 (17.08)	36.26 (72.50)	10.66 (21.31)	3.84 (7.68)	1.80 (3.61)
Heavy density	4.91 (9.81)	1.16 (2.33)	6.07 (12.14)	0.88 (1.74)	0.53 (1.04)	0.43 (0.85)

[a]Reference 4. Expressed in kg/Mg (lb/ton) of finished product. Gas stream did not pass through any added primary control device (wet ESP, venturi scrubber, etc.).
[b]Included in total particulate catch. These organics are collected as condensible particulate matter and do not necessarily represent the entire organics present in the exhaust gas stream.
[c]Includes phenol.

References for Section 8.11

1. J. R. Schorr, et al., Source Assessment: Pressed and Blown Glass Manufacturing Plants, EPA-600/2-77-005, U. S. Environmental Protection Agency, Research Triangle Park, NC, January 1977.

2. Annual Book of ASTM Standards, Part 18, ASTM Standard C167-64 (Reapproved 1979), American Society for Testing and Materials, Philadephia, Pa.

3. Standard of Performance For Wool Fiberglass Insulation Manufacturing Plants, 50 FR 7700, February 25, 1985.

4. Wool Fiberglass Insulation Manufacturing Industry: Background Information for Proposed Standards, U. S. Environmental Protection Agency, Research Triangle Park, NC, EPA-450/3-83-022a, December 1983.

8.12 FRIT MANUFACTURING

8.12.1 Process Description[1,2]

Frit is used in enameling iron and steel and in glazing porcelain and pottery. In a typical plant, the raw materials consist of a combination of materials such as borax, feldspar, sodium fluoride or fluorspar, soda ash, zinc oxide, litharge, silica, boric acid, and zircon. Frit is prepared by fusing these various minerals in a smelter, and the molten material is then quenched with air or water. This quenching operation causes the melt to solidify rapidly and shatter into numerous small glass particles, called frit. After a drying process, the frit is finely ground in a ball mill where other materials are added.

8.12.2 Emissions and Controls[2]

Significant dust and fume emissions are created by the frit-smelting operation. These emissions consist primarily of condensed metallic oxide fumes that have volatilized from the molten charge. They also contain mineral dust carryover and sometimes hydrogen fluoride. Emissions can be reduced by not rotating the smelter too rapidly (to prevent excessive dust carry-over) and by not heating the batch too rapidly or too long (to prevent volatilizing the more fusible elements).

The two most feasible control devices for frit smelters are baghouses and venturi water scrubbers. Emission factors for frit smelters are shown in Table 8.12-1. Collection efficiencies obtainable for venturi scrubbers are also shown in the table.

Table 8.12-1. EMISSION FACTORS FOR FRIT SMELTERS WITHOUT CONTROLS[a]
EMISSION FACTOR RATING: C

Type of furnace	Particulates[b]		Fluorides[b]	
	lb/ton	kg/MT	lb/ton	kg/MT
Rotary	16	8	5	2.5

[a]Reference 2. Emission factors expressed as units per unit weight of charge.
[b]A venturi scrubber with a 21-inch (535-mm) water-gauge pressure drop can reduce particulate emissions by 67 percent and fluorides by 94 percent.

References for Section 8.12

1. Duprey, R. L. Compilation of Air Pollutant Emission Factors. U.S. DHEW, PHS, National Center for Air Pollution Control. Durham, N.C. PHS Publication Number 999-AP-42. 1968. p. 37-38.

2. Spinks, J. L. Frit Smelters. In: Air Pollution Engineering Manual. Danielson, J. A. (ed.), U.S. DHEW, PHS, National Center for Air Pollution Control. Cincinnati, Ohio. PHS Publication Number 999-AP-40. 1967. p. 738-744.

8.13 GLASS MANUFACTURING

8.13.1 General [1-5]

Commercially produced glass can be classified as either soda-lime, lead, fused silica, borosilicate, or 96 percent silica. Soda-lime glass, which constitutes 77 percent of total glass production, will be discussed in this section. Soda-lime glass consists of sand, limestone, soda ash, and cullet (broken glass). The manufacture of glass can be broken down into four phases: (1) preparation of raw material, (2) melting in a furnace, (3) forming, and (4) finishing. Figure 8.13-1 shows an overall flow diagram for glass manufacturing.

The products of the glass manufacturing industry are flat glass, container glass, or pressed and blown glass. The procedure for manufacturing glass is the same for all three categories except for forming and finishing. Flat glass, which comprises 24 percent of total glass production, is formed by either the float, drawing, or rolling process. Container glass and pressed and blown glass, which comprise 51 and 25 percent, respectively, of total glass production, utilize either pressing, blowing, or pressing and blowing to form the desired product.

As raw materials are received, they are crushed and stored in separate elevated bins. The raw materials are transferred through a gravity feed system to the weigher and mixer, where the material and cullet are mixed to ensure homogeneous melting. The mixture is then transferred by conveyor to the batch storage bin where it remains until being dropped into the furnace feeder, which supplies the raw material to the melting furnace. All equipment used in handling and preparing the raw material is housed separately from the furnace and is usually referred to as the batch plant. Figure 8.13-2 shows a flow diagram of a batch plant.

The furnace most commonly utilized is a continuous regenerative furnace capable of producing between 50 and 300 tons (45 and 272 metric tons) of glass per day. A furnace may have either side or end ports connecting brick checkers to the inside of the melter. The purpose of the checkers is to conserve fuel by utilizing the heat of the combustion products in one side of the furnace to preheat combustion air in the other side. As material enters the melting furnace through the feeder, it floats on the top of the molten glass already in the furnace. As it melts, it passes to the front of the melter and eventually flows through a throat connecting the melter and the refiner. In the refiner, the molten glass is heat conditioned for delivery to the forming process. Figures 8.13-3 and 8.13-4 show side-port and end-port regenerative furnaces.

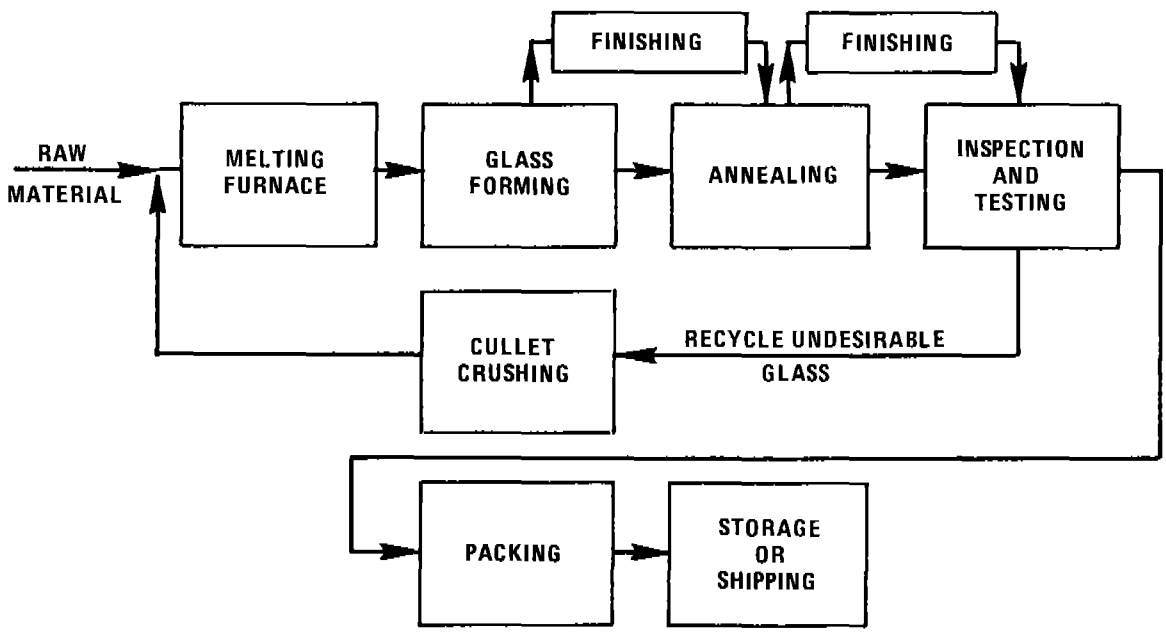

8.13-1. Flow diagram for glass manufacturing.

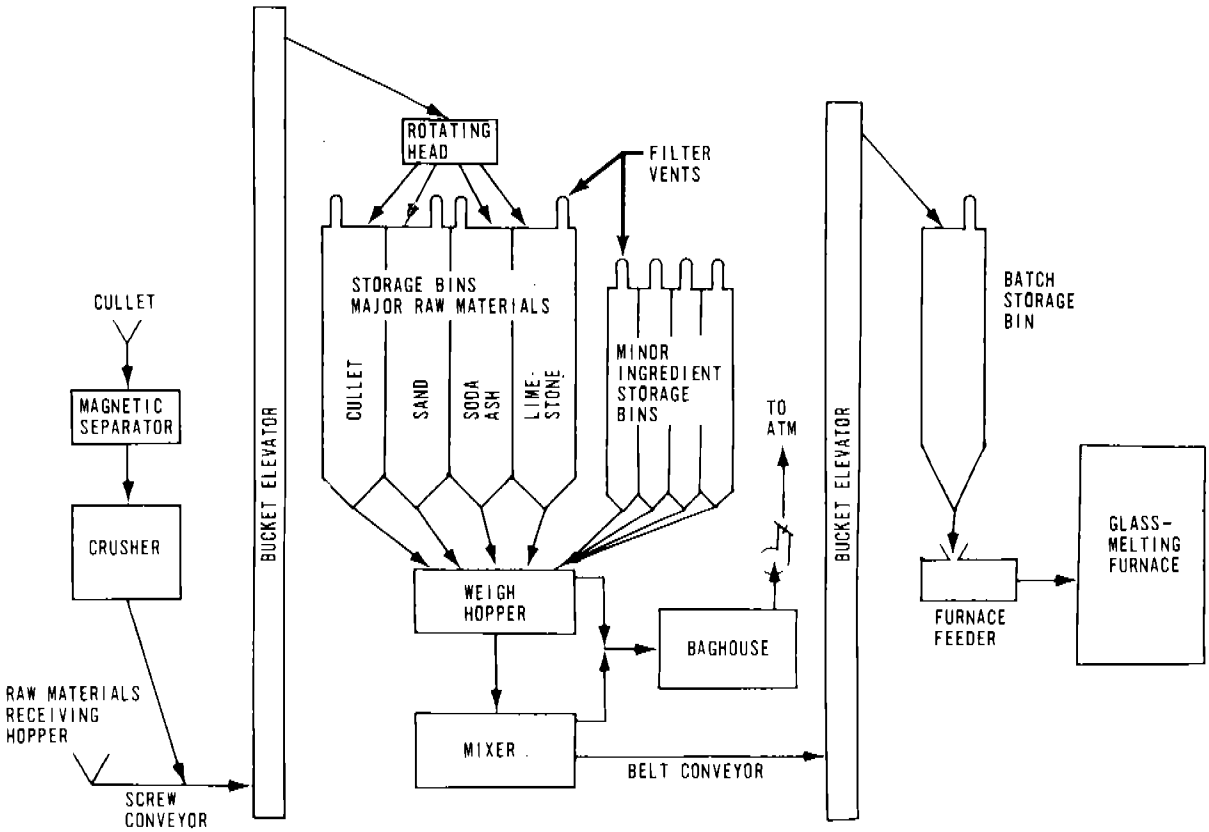

8.13-2. Flow diagram of a batch plant.[1]

After refining, the molten glass leaves the furnace through forehearths (except for the float process in which molten glass goes directly to the tin bath) and goes to be shaped by either pressing, blowing, pressing and blowing, drawing, rolling, or floating, depending upon the desired product. Pressing and blowing are preformed mechanically using blank molds and glass cut into sections (gobs) by a set of shears. In the drawing process, molten glass is drawn upward through rollers that guide the sheet glass. The thickness of the sheet is determined by the speed of the draw and the configuration of the draw bar. The rolling process is similar to the drawing process except that the glass is drawn horizontally by plain or patterned rollers and, for plate glass, requires grinding and polishing. The float process utilizes a molten tin bath over which the glass is drawn and formed into a finely finished surface requiring no grinding or polishing. The product undergoes finishing (decorating or coating) and annealing (removing unwanted stress areas in the glass), and is then inspected and prepared for shipment to market. Any damaged or undersirable glass is transferred back to the batch plant to be used as cullet.

8.13.2 Emissions and Controls[1-5]

Table 8.13-1 lists controlled and uncontrolled emission factors for glass manufacturing.

The main pollutant emitted by the batch plant is particulates in the form of dust. This can be controlled, with 99 to 100 percent efficiency, by enclosing all possible dust sources and using baghouses or cloth filters. Another way to control dust emissions, also with an efficiency approaching 100 percent, is to treat the batch to reduce the amount of fine particles present. Forms of preparation are presintering, briquetting, pelletizing, or liquid alkali treatment.

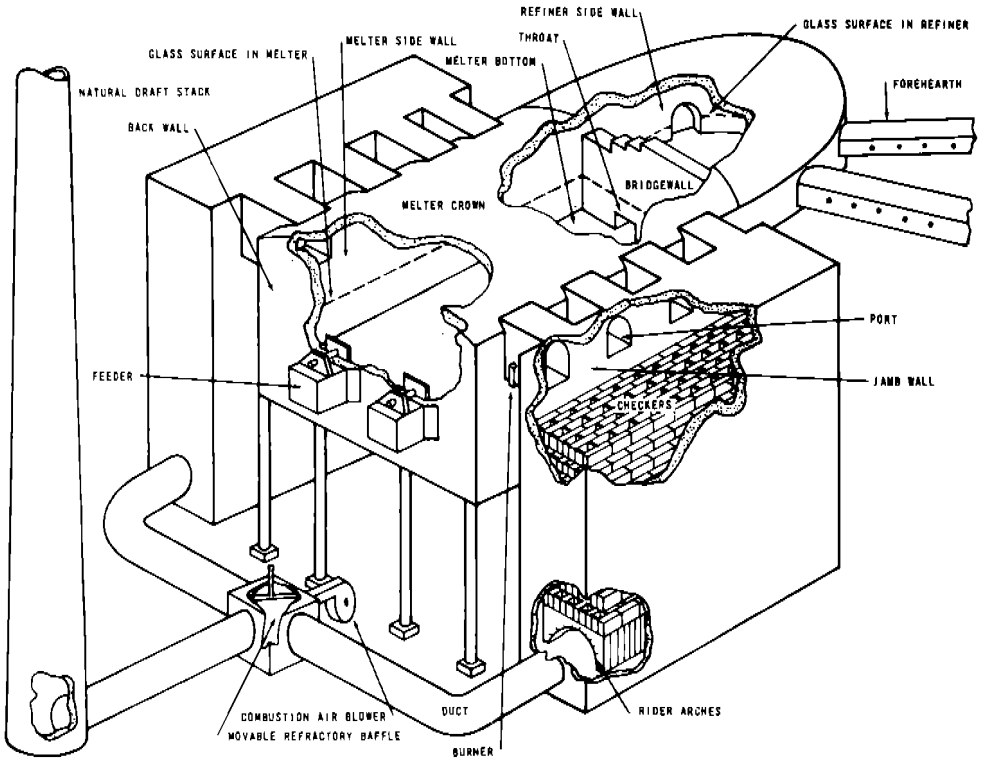

8.13-3. Side-port continuous regenerative furnace.[1]

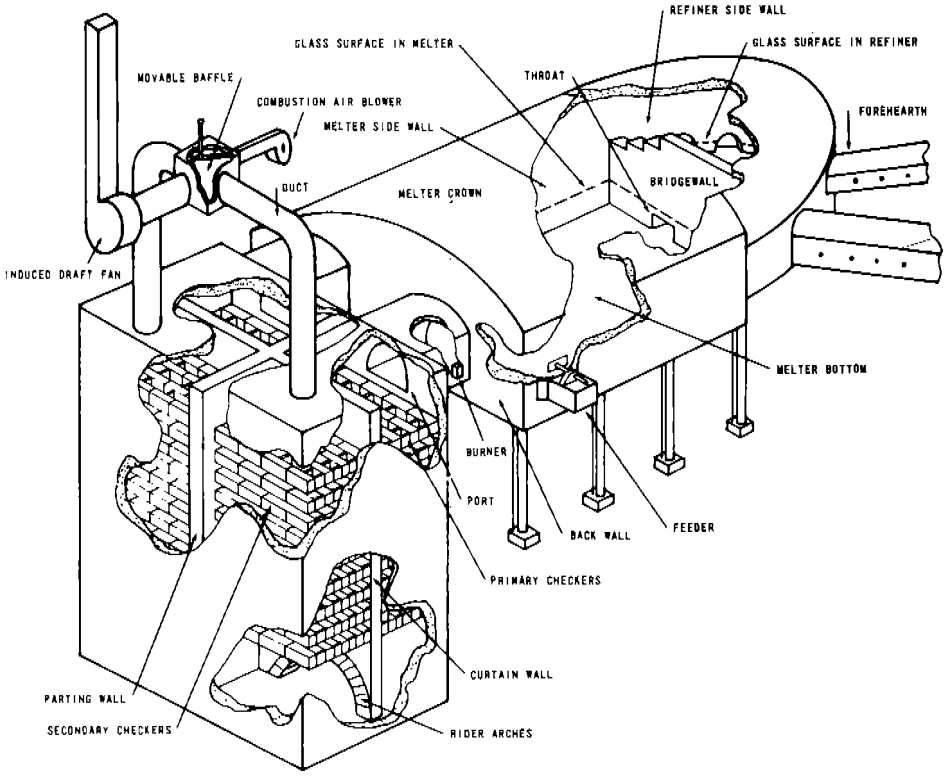

8.13-4. End-port continuous regenerative furnace.[1]

TABLE 8.13-1. EMISSION FACTORS FOR GLASS MANUFACTURING[a,b]

EMISSION FACTOR RATING: B

Process	Particulate[d]		Sulfur oxides		Nitrogen oxides		Organics		Carbon monoxide		Lead	
	kg/Mg	lb/ton	kg/Mg	lb/ton	kg/Mg	lb/ton	kg/Mg	lb/ton	kg/Mg	lb/ton	kg/Mg	lb/ton
Raw materials handling[e] (all types of glass)	Negl[f]	Negl[f]	0	0	0	0	0	0	0	0	-	-
Metal furnace[g]												
Container												
Uncontrolled	0.7 (0.4-0.9)	1.4 (0.9-1.9)	1.7 (1.0-2.4)	3.4 (2.0-4.8)	3.1 (1.6-4.5)	6.2 (3.3-9.1)	0.1 (0-0.2)	0.2 (0-0.4)	0.1 (0-0.2)	0.2 (0-0.5)	-	-
W/low-energy scrubber[h]	0.4	0.7	0.9	1.7	3.1	6.2	0.1	0.2	0.1	0.2	-	-
W/venturi scrubber[i]	< 0.1	0.1	0.1	0.2	3.1	6.2	0.1	0.2	0.1	0.2	-	-
W/baghouse[j]	Negl	Negl	1.7	3.4	3.1	6.2	0.1	0.2	0.1	0.2	-	-
W/electrostatic precipitator[k]	Negl	Negl	1.7	3.4	3.1	6.2	0.1	0.2	0.1	0.2	-	-
Flat												
Uncontrolled	1.0 (0.4-1.6)	2.0 (0.8-3.2)	1.5 (1.1-1.9)	3.0 (2.2-3.8)	4.0 (2.8-5.2)	8.0 (5.6-10.4)	< 0.1	< 0.1	< 0.1	< 0.1	-	-
W/low-energy scrubber[h]	0.5	1.0	0.8	1.5	4.0	8.0	< 0.1	< 0.1	< 0.1	< 0.1	-	-
W/venturi scrubber[i]	Negl	Negl	0.1	0.2	4.0	8.0	< 0.1	< 0.1	< 0.1	< 0.1	-	-
W/baghouse[j]	Negl	Negl	1.5	3.0	4.0	8.0	< 0.1	< 0.1	< 0.1	< 0.1	-	-
W/electrostatic precipitator[k]	Negl	Negl	1.5	3.0	4.0	8.0	< 0.1	< 0.1	< 0.1	< 0.1	-	-
Pressed and blown												
Uncontrolled	8.7 (0.5-12.6)	17.4 (1.0-25.1)	2.8 (0.5-5.4)	5.6 (1.1-10.9)	4.3 (0.4-10.0)	8.5 (0.8-20.0)	0.2 (<0.1-0.3)	0.3 (0.1-1.0)	0.1 (0.1-0.2)	0.2 (0.1-0.3)	-	-
W/low-energy scrubber[h]	4.2	8.4	1.3	2.7	2.2	8.5	0.2	0.3	0.1	0.2	-	-
W/venturi scrubber[i]	0.5	0.9	0.1	0.3	2.2	8.5	0.2	0.3	0.1	0.2	-	-
W/baghouse[j]	0.1	0.2	2.8	5.6	2.2	8.5	0.2	0.3	0.1	0.2	-	-
W/electrostatic precipitator[k]	0.1	0.2	2.8	5.6	2.2	8.5	0.2	0.3	0.1	0.2	-	-
Forming and finishing												
Container[l,m]	Negl	Negl	Negl	Negl	Negl	Negl	4.4	8.7	Negl	Negl	-	-
Flat	Negl	Negl	Negl	Negl	Negl	Negl	Negl	Negl	Negl	Negl	-	-
Pressed and blown[k,l]	Negl	Negl	Negl	Negl	Negl	Negl	4.5	9.0	Negl	Negl	-	-
Lead glass manufacturing, total[n,o,p]	-	-	-	-	-	-	-	-	-	-	5	2.5

[a]References 2-3, 5. Dash indicates no available data.
[b]Emission factors are expressed as kg/Mg (lb/ton) of glass produced.
[c]When literature references reported ranges in emission rates, these ranges are shown in parentheses along with the average emission factor. Single emission factors are averages of literature data for which no ranges were reported.
[d]Particulates are submicron in size.
[e]Emission factors for raw materials handling are not separated into types of glass produced since batch preparation is the same for all types. Particulate emissions are negligible because almost all plants utilize some form of control (i.e. baghouses, scrubbers, or centrifugal collectors).
[f]Negligible.
[g]Control efficiencies for the various devices are applied only to the average emission factor.
[h]Approximately 52 percent efficient in reducing particulate and sulfur oxides emissions. Effect on nitrogen oxides is unknown.
[i]Approximately 95% efficient in reducing particulate and sulfur oxide emissions. Effect on nitrogen oxides is unknown.
[j]Approximately 99% efficient in reducing particulate emissions.
[k]Particulate emission factors are calculated using data for furnaces melting soda lime and lead glasses. No data are available for borosilicate or opal glasses.
[l]Hydrocarbon emission factors for container and pressed and blown glass are from the decorating process. Emissions can be controlled by incineration, absorption, or condensation; however, efficiencies are not known.
[m]For container and pressed and blown glass, tin chloride, hydrated tin chloride, and hydrogen chloride are also emitted during the surface treatment process at a rate of less than 0.1 kg/Mg (0.2 lb/ton) each.
[n]References 6 and 7.
[o]For specific processes within lead glass manufacturing, use the general emission factors which apply to the specific process.
[p]Particulate containing 23% lead.

The melting furnace contributes over 99 percent of the total emissions from the glass plant. In the furnace, both particulates and gaseous pollutants are emitted. Particulates result from volatilization of materials in the melt that combine with gases to form condensates. These are either collected in the checker-work and gas passages or escape to the atmosphere. Serious problems arise when the checkers are not properly cleaned in that slag can form, clogging the passages and eventually deteriorating the condition and efficiency of the furnace. Nitrogen oxides form when nitrogen and oxygen react in the high temperatures of the furnace. Sulfur oxides result from the decomposition of the sulfates in the batch and the fuel. Proper maintenance and firing of the furnace can control emissions and also add to the efficiency of the furnace and reduce operational costs. Low-pressure wet centrifugal scrubbers have been used to control particulates and sulfur oxides, but their low efficiency (approximately 50 percent) indicates their inability to collect particulates of submicron size. High-energy venturi scrubbers are approximately 95 percent effective in reducing particulate and sulfur oxide emissions; their effect on nitrogen oxide emissions is unknown. Baghouses, which have up to 99 percent particulate collection efficiency, have been used on small regenerative furnaces, but due to fabric corrosion, require careful temperature control. Electrostatic precipitators have an efficiency of up to 99 percent in the collection of particulates.

Emissions from the forming and finishing phase depend upon the type of glass being manufactured. For container, press, and blow machines, the majority of emissions result from the gob coming into contact with the machine lubricant. Emissions in the form of a dense white cloud, which can exceed 40 percent opacity, are generated by flash vaporization of hydrocarbon greases and oils. Grease and oil lubricants are being replaced by silicone emulsions and water-soluble oils, which may virtually eliminate the smoke. For flat glass, the only contributor to air pollutant emissions is gas combustion in the annealing lehr, which is totally enclosed except for entry and exit openings. Since emissions are small and operational procedures are efficient, no controls are utilized.

References for Section 8.13

1. J. A. Danielson (ed.)., Air Pollution Engineering Manual (2nd Ed.), AP-40, U.S. Environmental Protection Agency, Research Triangle Park, NC, 1973. Out of Print.

2. Richard B. Reznik, Source Assessment: Flat Glass Manufacturing Plants, EPA-600/20-76-032b, U. S. Environmental Protection Agency, Research Triangle Park, NC, March 1976.

3. J. R. Schoor, D. T. Hooie, P. R. Sticksel, and Clifford Brockway, Source Assessment: Glass Container Manufacturing Plants, EPA-600/2-76-269, U.S. Environmental Protection Agency, Washington, DC, October 1976.

4. A. B. Tripler, Jr. and G. R. Smithson, Jr., A Review of Air Pollution Problems and Control in the Ceramic Industries, Battelle Memorial Institute, Columbus, OH, presented at 72nd Annual Meeting of the American Ceramic Society, May 1970.

5. J. R. Schorr, D. T. Hooie, M. C. Brockway, P. R. Sticksel, and D. E. Niesz, Source Assessment: Pressed and Blown Glass Manufacturing Plants, prepared for U. S. Environmental Protection Agency, Research Triangle Park, NC, Publication Number EPA-600/2-77-005, January 1977.

6. Control Techniques for Lead Air Emissions, EPA-450/2-77-012, U. S. Environmental Protection Agency, Research Triangle Park, NC, December 1977.

7. Confidential test data, PEDCo-Environmental Specialists, Inc., Cincinnati, OH.

8.14 GYPSUM MANUFACTURING

8.14.1 Process Description[1-2]

Gypsum is calcium sulfate dihydrate ($CaSO_4 \cdot 2H_2O$), a white or gray naturally occurring mineral. Raw gypsum ore is processed into a variety of products such as a Portland cement additive, soil conditioner, industrial and building plasters, and gypsum wallboard. To produce plasters or wallboard, gypsum must first be partially dehydrated or calcined to produce calcium sulfate hemihydrate ($CaSO_4 \cdot \frac{1}{2}H_2O$), commonly called stucco.

A flow diagram for a typical gypsum process producing both crude and finished gypsum products is shown in Figure 8.14-1. In this process, gypsum is crushed, dried, ground and calcined. Some of the operations shown in Figure 8.14-1 are not performed at all gypsum plants. Some plants produce only wallboard, and many plants do not produce soil conditioner.

Gypsum ore, from quarries and/or underground mines, is crushed and stockpiled near a plant. As needed, the stockpiled ore is further crushed and screened to about 50 millimeters (2 inches) in diameter. If the moisture content of the mined ore is greater than about 0.5 weight percent, the ore must be dried in a rotary dryer or a heated roller mill. Ore dried in a rotary dryer is conveyed to a roller mill where it is ground to 90 percent less 149 micrometers (100 mesh). The ground gypsum exits the mill in a gas stream and is collected in a product cyclone. Ore is sometimes dried in the roller mill by heating the gas stream, so that drying and grinding are accomplished simultaneously and no rotary dryer is needed. The finely ground gypsum ore is known as landplaster, which may be used as soil conditioner.

In most plants, landplaster is fed to kettle calciners or flash calciners, where it is heated to remove three quarters of the chemically bound water to form stucco. Calcination occurs at approximately 120 to 150°C (250 to 300°F), and 0.908 megagrams (Mg) (one ton) of gypsum calcines to about 0.77 Mg (0.85 ton) of stucco.

In kettle calciners, the gypsum is indirectly heated by hot combustion gas passed through flues in the kettle, and the stucco product is discharged into a "hot pit" located below the kettle. Kettle calciners may be operated in either batch or continuous modes. In flash calciners, the gypsum is directly contacted with hot gases, and the stucco product is collected at the bottom of the calciner. A major gypsum manufacturer holds a patent on the design of the flash calciner.

At some gypsum plants, drying, grinding and calcining are performed in heated impact mills. In these mills, hot gas contacts gypsum as it is ground. The gas dries and calcines the ore and then conveys the stucco to a product cyclone for collection. The use of heated impact mills eliminates the need for rotary dryers, calciners and roller mills.

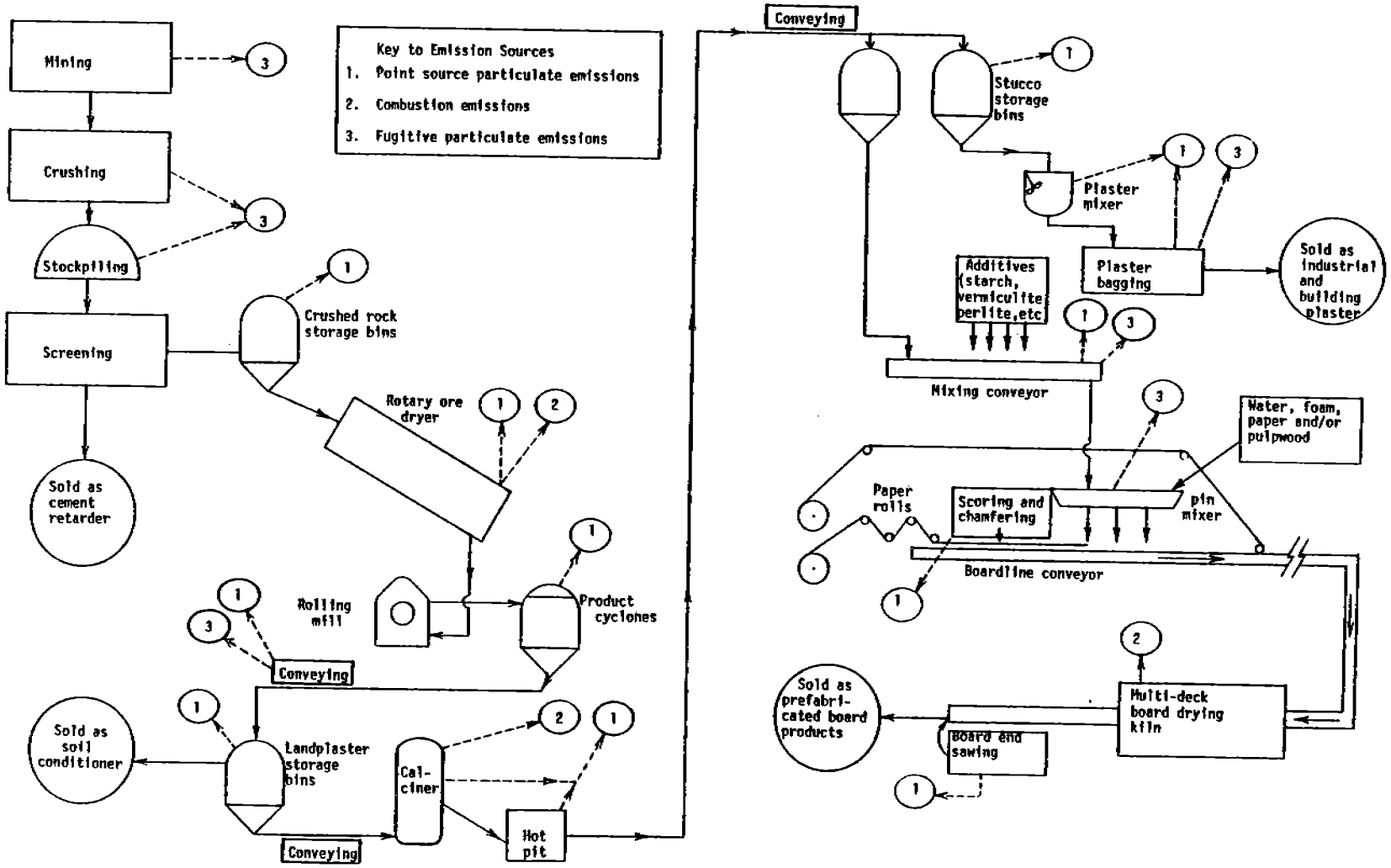

Figure 8.14-1. Overall gypsum manufacturing process flow diagram.

Gypsum and stucco usually are transferred from one process to another in screw conveyors or bucket elevators. Storage bins or silos are normally located downstream of roller mills and calciners but may also be used elsewhere.

In the manufacture of plasters, stucco is ground further in a tube or ball mill and then batch mixed with retarders and stabilizers to produce plasters with specific setting rates. The thoroughly mixed plaster is fed continuously from intermediate storage bins to a bagging operation.

In the manufacture of wallboard, stucco from storage is first mixed with dry additives such as perlite, starch, fiberglass or vermiculite. This dry mix is combined with water, soap foam, accelerators and shredded paper or pulpwood in a pin mixer at the head of a board forming line. The slurry is then spread between two paper sheets that serve as a mold. The edges of the paper are scored, and sometimes chamfered, to allow precise folding of the paper to form the edges of the board. As the wet board travels the length of a conveying line, the calcium sulfate hemihydrate combines with the water in the slurry to form solid calcium sulfate dihydrate or gypsum, resulting in rigid board. The board is rough cut to length, and it enters a multideck kiln dryer where it is dried by direct contact with hot combustion gases or by indirect steam heating. The dried board is conveyed to the board end sawing area and is trimmed and bundled for shipment.

8.14.2 Emissions and Controls[2]

Potential emission sources in gypsum manufacturing plants are shown in Figure 8.14-1. Although several sources may emit gaseous pollutants, particulate emissions are of greatest concern. The major sources of particulate emissions include rotary ore dryers, grinding mills, calciners and board end sawing operations. Particulate emission factors for these operations are shown in Table 8.14-1. All these factors are based on output production rates. Particle size data for ore dryers, calciners and board end sawing operations are shown in Tables 8.14-2 and 8.14-3.

The uncontrolled emission factors presented in Table 8.14-1 represent the process dust entering the emission control device. It is important to note that emission control devices are frequently needed to collect the product from some gypsum processes and, thus, are commonly thought of by the industry as process equipment and not added control devices.

Emissions sources in gypsum plants are most often controlled with fabric filters. These sources include:

- rotary ore dryers
- roller mills
- impact mills
- kettle calciners
- flash calciners
- board end sawing
- scoring and chamfering
- plaster mixing and bagging
- conveying systems
- storage bins

Uncontrolled emissions from scoring and chamfering, plaster mixing and bagging, conveying systems, and storage bins are not well quantified.

TABLE 8.14-1. PARTICULATE EMISSION FACTORS FOR GYPSUM PROCESSING[a]

EMISSION FACTOR RATING: B

Process	Uncontrolled[b]		With fabric filter[c]		With electrostatic precipitator	
	kg/Mg	lb/ton	kg/Mg	lb/ton	kg/Mg	lb/ton
Crushers, screens, stockpiles, roads	d	d	-	-	-	-
Rotary ore dryers[e,f,g]	$0.0042(FFF)^{1.77}$	$0.16(FFF)^{1.77}$	0.02[h]	0.04[h]	NA	
Roller mills[i]	1.3[j]	2.6[j]	0.06	0.12	0.05[k]	0.09[k]
Impact mills[e,l]	50[g,j]	100[g,j]	0.01	0.02	NA	
Flash calciners[e,m]	19	37	0.02	0.04	NA	
Continuous kettle calciners[n]	21[p]	41[p]	0.003[p]	0.006[p]	0.05[j]	0.09[j]
	kg/m^2	$lb/100\ ft^2$	$kg/10^6\ m^2$	$lb/10^6\ ft^2$		
Board end sawing[q]						
2.4 m (8 ft) boards	0.04	0.8	36	7.5		
3.7 m (12 ft) boards	0.03	0.5	36	7.5		

[a]Based on process output production rate. Rating applies to all factors except where otherwise noted. Dash = not applicable. NA = not available.

[b]Factors represent any dust entering the emission control device.

[c]References 3-6, 8-11. Factors for sources controlled with fabric filters are based on pulse jet fabric filters with actual air/cloth ratios ranging from 2.3:1 - 7.0:1, mechanical shaker fabric filters with ratios from 1.5:1 - 4.6:1, and a reverse flow fabric filter with a ratio of 2.3:1.

[d]Factors for these operations are in Sections 8.19 and 11.2.

[e]Includes particulate matter from fuel combustion.

[f]References 3-4, 8, 11-12. Equation is for emission rate upstream of any process cyclones and is applicable only to concurrent rotary ore dryers with flowrates of 7.5 m^3/s (16,000 acfm) or less. FFF in the uncontrolled emission factor equation is "flow feed factor", the ratio of gas mass rate per unit dryer cross sectional area to the dry mass feed rate, in the following units:

$$\frac{kg/hr - m^2 \text{ of gas flow}}{Mg/hr \text{ dry feed}} \quad \text{or} \quad \frac{lb/hr - ft^2 \text{ of gas flow}}{ton/hr \text{ dry feed}}$$

Measured uncontrolled emission factors for 4.2 and 5.7 m^3/s (9000 and 12,000 acfm) range from 5 - 60 kg/Mg (10 - 120 lb/ton).

[g]EMISSION FACTOR RATING: C.

[h]Applicable to rotary dryers with and without process cyclones upstream of the fabric filter.

[i]References 11-14. Factors apply to both heated and unheated roller mills.

[j]Factors represent emissions downstream of the product cyclone.

[k]Factor is for combined emissions from roller mills and kettle calciners, based on the sum of the roller mill and kettle calciner output production rates.

[l]References 9,15. As used here, an impact mill is a process unit with process cyclones and is used to dry, grind and calcine gypsum simultaneously.

[m]References 3, 6, 10. A flash calciner is a process unit used to calcine gypsum through direct contact with hot gas. No grinding is performed in this unit.

[n]References 4-5, 11, 13-14.

[p]Based on emissions from both the kettle and the hot pit. Not applicable to batch kettle calciners.

[q]References 4-5, 16. Based on 13 mm (½ in.) board thickness and 1.2 m (4 ft) board width. For other board thicknesses, multiply the appropriate emission factor by 0.079 times board thickness in millimeters, or by 2 times board thickness in inches.

TABLE 8.14-2. UNCONTROLLED PARTICLE SIZE DATA FOR GYPSUM PROCESSING

Process	Weight Percent 10 μm	2 μm
Rotary ore dryer		
with cyclones[a]	45[b]	12[b]
without cyclones[c]	8[b]	1[b]
Continuous kettle calciners[d]	63[e]	17[e]
Flash calciners[f]	38[b]	10[b]

[a]Reference 4.
[b]Aerodynamic diameter, Andersen analysis.
[c]Reference 3.
[d]References 4-5.
[e]Equivalent diameter, Bahco and Sedigraph analyses.
[f]References3, 6.

TABLE 8.14-3. PARTICLE SIZE DATA FOR GYPSUM PROCESSING OPERATIONS CONTROLLED WITH FABRIC FILTERS[a]

Process	Weight Percent 10 μm	2 μm
Rotary ore dryer		
with cyclones[b]	c	9
without cyclones[d]	26	9
Flash calciners[e]	84	52
Board end sawing[e]	76	49

[a]Aerodynamic diameters, Andersen analysis.
[b]Reference 4.
[c]Not available
[d]Reference 3.
[e]References 3, 6.
[f]References 4-5.

Emissions from some gypsum sources are also controlled with electrostatic precipitators (ESP). These sources include rotary ore dryers, roller mills, kettle calciners and conveying systems. Although rotary ore dryers may be controlled separately, emissions from roller mills and conveying systems are usually controlled jointly with kettle calciner emissions. Moisture in the kettle calciner exit gas improves the ESP performance by lowering the resistivity of the dust.[7]

Other sources of particulate emissions in gypsum plants are primary and secondary crushers, screens, stockpiles and roads. If quarrying is part of the mining operation, particulate emissions may also result from drilling and blasting. Emission factors for some of these sources are presented in Sections 8.19 and 11.2.

Gaseous emissions from gypsum processes result from fuel combustion and may include nitrogen oxides, carbon monoxide and sulfur oxides. Processes using fuel include rotary ore dryers, heated roller mills, impact mills, calciners and board drying kilns. Although some plants use residual fuel oil, the majority of the industry uses clean fuels such as natural gas or distillate fuel oil.[17] Emissions from fuel combustion may be estimated using emission factors presented in Sections 1.3 and 1.4.

References for Section 8.14

1. Kirk-Othmer Encyclopedia of Chemical Technology, Volume 4, John Wiley & Sons, Inc., New York, 1978.

2. Gypsum Industry - Background Information for Proposed Standards (Draft), U. S. Environmental Protection Agency, Research Triangle Park, NC, April 1981.

3. Source Emissions Test Report, Gold Bond Building Products, EMB-80-GYP-1, U. S. Environmental Protection Agency, Research Triangle Park, NC, November 1980.

4. Source Emissions Test Report, United States Gypsum Company, EMB-80-GYP-2, U. S. Environmental Protection Agency, Research Triangle Park, NC, November 1980.

5. Source Emission Tests, United States Gypsum Company Wallboard Plant, EMB-80-GYP-6, U. S. Environmental Protection Agency, Research Triangle Park, NC, January 1981.

6. Source Emission Tests, Gold Bond Building Products, EMB-80-GYP-5, U. S. Environmental Protection Agency, Research Triangle Park, NC, December 1980.

7. S. Oglesby and G. B. Nichols, A Manual of Electrostatic Precipitation Technology, Part II: Application Areas, APTD-0611, U. S. Environmental Protection Agency, Cincinnati, OH, August 25, 1970.

8. Official Air Pollution Emission Tests Conducted on the Rock Dryer and #3 Calcidyne Unit, Gold Bond Building Products, Report No. 5767, Rosnagel and Associates, Medford, NJ, August 3, 1979.

9. Particulate Analysis of Calcinator Exhaust at Western Gypsum Company, Kramer, Callahan and Associates, Rosario, NM, April 1979. Unpublished.

10. Official Air Pollution Tests Conducted on the #1 Calcidyner Baghouse Exhaust at the National Gypsum Company, Report No. 2966, Rossnagel and Associates, Atlanta, GA, April 10, 1978.

11. Report to United States Gypsum Company on Particulate Emission Compliance Testing, Environmental Instrument Systems, Inc., South Bend, IN, November 1975. Unpublished.

12. Particulate Emission Sampling and Analysis, United States Gypsum Company, Environmental Instrument Systems, Inc., South Bend, IN, July 1973. Unpublished.

13. Written communication from Wyoming Air Quality Division, Cheyenne, WY, to Michael Palazzolo, Radian Corporation, Durham, NC, 1980.

14. Written communication from V. J. Tretter, Georgia-Pacific Corporation, Atlanta, GA, to M. E. Kelly, Radian Corporation, Durham, NC, November 14, 1979.

15. Telephone communication between Michael Palazzolo, Radian Corporation, Durham, NC, and D. Louis, C. E. Raymond Company, Chicago, IL, April 23, 1981.

16. Written communication from Michael Palazzolo, Radian Corporation, Durham, NC, to B. L. Jackson, Weston Consultants, West Chester, PA, June 19, 1980.

17. Telephone communication between P. J. Murin, Radian Corporation, Durham, NC, and J. W. Pressler, U. S. Department of the Interior, Bureau of Mines, Washington, DC, November 6, 1979.

8.15 LIME MANUFACTURING

8.15.1 General[1-4]

Lime is the high-temperature product of the calcination of limestone. There are two kinds of lime: high-calcium lime (CaO) and dolomitic lime (CaO · MgO). Lime is manufactured in various kinds of kilns by one of the following reactions:

$$CaCO_3 + \text{heat} \rightarrow CO_2 + CaO \text{ (high calcium lime)}$$

$$CaCO_3 \,.\, MgCO_3 + \text{heat} \rightarrow CO_2 + CaO \,.\, MgO \text{ (dolomitic lime)}$$

In some lime plants, the resulting lime is reacted (slaked) with water to form hydrated lime.

The basic processes in the production of lime are (1) quarrying the raw limestone, (2) preparing the limestone for the kilns by crushing and sizing, (3) calcining the limestone, (4) processing the quicklime further by hydrating, and (5) miscellaneous transfer, storage, and handling operations. A generalized material flow diagram for a lime manufacturing plant is given in Figure 8.15-1. Note that some of the operations shown may not be performed in all plants.

The heart of a lime plant is the kiln. The most prevalent type of kiln is the rotary kiln, accounting for about 90 percent of all lime production in the United States. This kiln is a long, cylindrical, slightly inclined, refractory-lined furnace through which the limestone and hot combustion gases pass countercurrently. Coal, oil, and natural gas may all be fired in rotary kilns. Product coolers and kiln-feed preheaters of various types are commonly employed to recover heat from the hot lime product and and hot exhaust gases, respectively.

The next most prevalent type of kiln in the United States is the vertical, or shaft, kiln. This kiln can be described as an upright heavy steel cylinder lined with refractory material. The limestone is charged at the top and calcined as it descends slowly to the bottom of the kiln where it is discharged. A primary advantage of vertical kilns over rotary kilns is the higher average fuel efficiency. The primary disadvantages of vertical kilns are their relatively low production rates and the fact that coal cannot be used without degrading the quality of the lime produced. Although still prevalent in Europe, there have been few recent vertical kiln installations in the United States because of the high production requirements of domestic manufacturers.

Other, much less common, kiln types include rotary hearth and fluidized-bed kilns. The rotary hearth kiln, or "calcimatic" kiln, is a circular-shaped kiln with a slowly revolving donut-shaped hearth. In fluidized-bed kilns, finely divided limestone is brought into direct contact with hot combustion air in a turbulent zone, usually above a perforated grate. Dust collection equipment must be installed on fluidized-bed kilns for process economics because of the high lime carryover into the exhaust gases. Both kiln types can achieve high production rates, but neither can operate with coal.

About 10 percent of all lime produced is converted to hydrated (slaked) lime. There are two kinds of hydrators: atmospheric and pressure. Atmospheric hydrators, the most prevalent kind, are used to produce high calcium and normal dolomitic hydrates. Pressure hydrators, on the other hand, are only employed when a completely hydrated dolomitic lime is needed. Atmospheric hydrators operate continuously, whereas pressure hydrators operate in a batch mode. Generally, water sprays or wet scrubbers are employed as an integral part of the hydrating process to prevent product losses. Following hydration, the resulting product may be milled and conveyed to air separators for further drying and for removal of the coarse fractions.

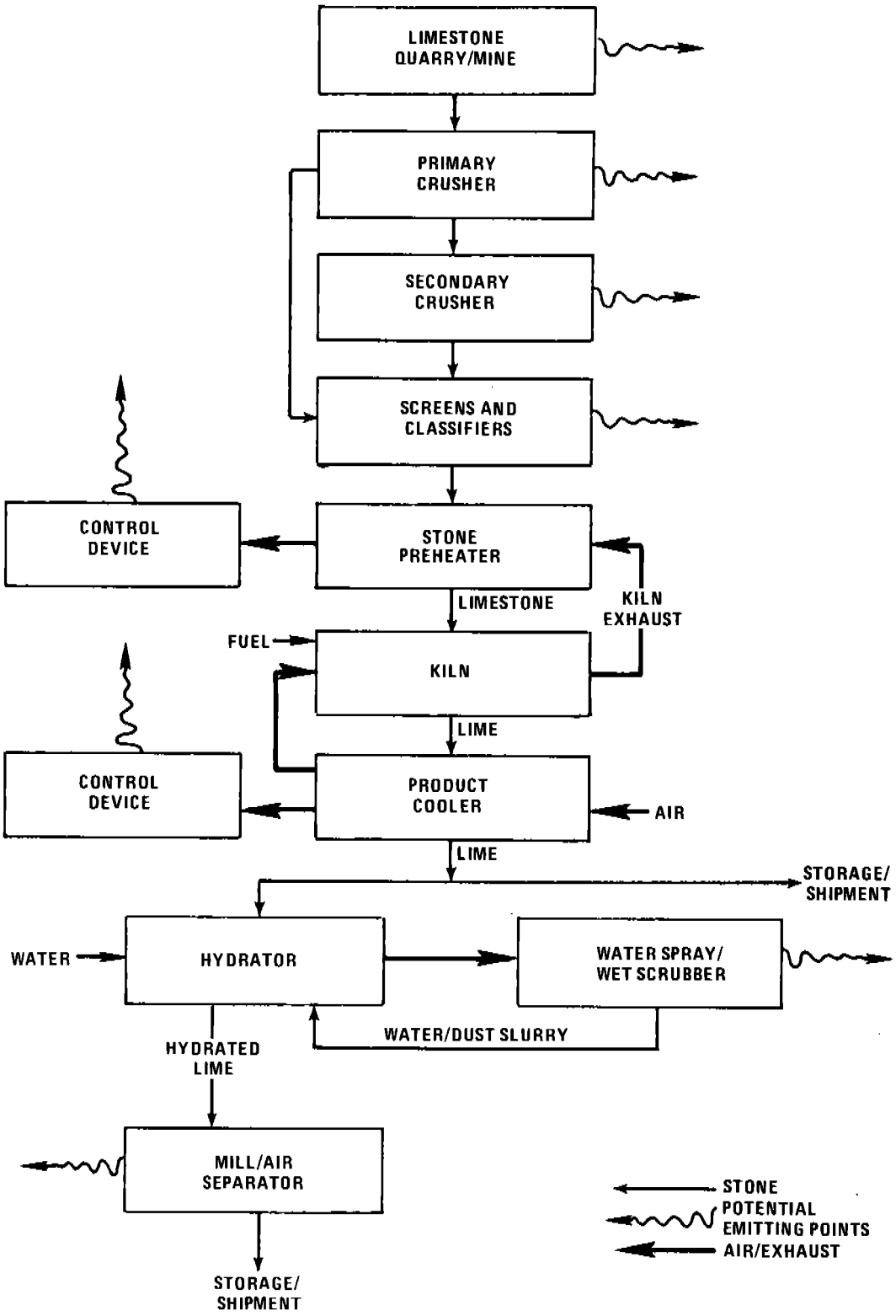

Figure 8.15-1. Generalized lime manufacturing plant.

In the United States, the major use of lime is in chemical and metallurgical applications. Two of the largest uses in these areas are as steel flux and in alkali production. Other lesser uses include construction, refractory, and agricultural applications.

8.15.2 Emissions and Controls[3-5]

Potential air pollutant emitting points in lime manufacturing plants are shown in Figure 8.15-1. Particulate is the only pollutant of concern from most of the operations; however, gaseous pollutants are also emitted from kilns.

The largest source or particulate is the kiln. Of the various kiln types in use, fluidized-bed kilns have the highest uncontrolled particulate emissions. This is due primarily to the very small feed size combined with the high air flow through these kilns. Fluidized-bed kilns are well controlled for maximum product recovery. The rotary kiln is second to the fluidized-bed kiln in uncontrolled particulate emissions. This is attributed to the small feed size and relatively high air velocities and dust entrainment caused by the rotating chamber. The rotary hearth, or "calcimatic" kiln ranks third in dust production, primarily because of the larger feed size combined with the fact that the limestone remains in a stationary position relative to the hearth during calcination. The vertical kiln has the lowest uncontrolled dust emissions due to the large lump-size feed and the relatively slow air velocities and slow movement of material through the kiln.

Some sort of particulate control is generally employed on most kilns. Rudimentary fallout chambers and cyclone separators are commonly used for control of the larger particles; fabric and gravel bed filters, wet (commonly venturi) scubbers, and electrostatic precipitators are employed for secondary control. Table 8.15-1 yields approximate efficiencies of each type of control on the various types of kilns.

Nitrogen oxides, carbon monoxide, and sulfur oxides are all produced in kilns, although the latter are the only gaseous pollutant emitted in significant quantities. Not all of the sulfur in the kiln fuel is emitted as sulfur oxides because some fraction reacts with the materials in the kiln. Some sulfur oxide reduction is also effected by the various equipment used for secondary particulate control. Estimates of the quantities of sulfur oxides emitted from kilns, both before and after controls, are presented in Table 8.15-1.

Hydrator emissions are low because water sprays or wet scrubbers are usually installed for economic reasons to prevent product loss in the exhaust gases. Emissions from pressure hydrators may be higher than from the more common atmospheric hydrators because the exhaust gases are released intermittently over short time intervals, making control more difficult.

Product coolers are emission sources only when some of their exhaust gases are not recycled through the kiln for use as combustion air. The trend is away from the venting of product cooler exhaust, however, to maximize fuel use efficiencies. Cyclones, baghouses, and wet scrubbers have been employed on coolers for particulate control.

Other particulate sources in lime plants include primary and secondary crushers, mills, screens, mechanical and pneumatic transfer operations, storage piles, and unpaved roads. If quarrying is a part of the lime plant operation, particulate may also result from drilling and blasting. Emission factors for some of these operations are presented in Sections 8.20 and 11.2.

Emission factors for lime manufacturing are presented in Table 8.15-1.

Table 8.15-1. EMISSION FACTORS FOR LIME MANUFACTURING
EMISSION FACTOR RATING: B

Source	Emissions[a]							
	Particulate		Sulfur dioxide		Nitrogen oxides		Carbon monoxide	
	lb/ton	kg/MT	lb/ton	kg/MT	lb/ton	kg/MT	lb/ton	kg/MT
Crushers, screens, conveyors, storage piles, unpaved roads	b	b	Neg.	Neg.	Neg.	Neg.	Neg.	Neg.
Rotary kilns								
Uncontrolled[c]	340	170	d	d	3	1.5	2	1
After settling chamber or large diameter cyclone	200	100	d	d	3	1.5	2	1
After multiple cyclones	85[e]	43[e]	d	d	3	1.5	2	1
After secondary dust collection[f]	1	0.5	g	g	3	1.5	2	1
Vertical kilns								
Uncontrolled	8	4	NA[h]	NA[h]	NA	NA	NA	NA
Calcimatic kilns[i]								
Uncontrolled	50	25	NA	NA	0.2	0.1	NA	NA
After multiple cyclones	6	3	NA	NA	0.2	0.1	NA	NA
After secondary dust collection[j]	NA	NA	NA	NA	0.2	0.1	NA	NA
Fluidized-bed kilns	NA[k]	NA[k]	NA	NA	NA	NA	NA	NA
Product coolers								
Uncontrolled	40[l]	20[l]	Neg.	Neg.	Neg.	Neg.	Neg.	Neg.
Hydrators	0.1[m]	0.05[m]	Neg.	Neg.	Neg.	Neg.	Neg.	Neg.

[a]All emission factors for kilns and coolers are per unit of lime produced. Divide by two to obtain factors per unit of limestone feed to the kiln. Factors for hydrators are per unit of hydrated lime produced. Multiply by 1.25 to obtain factors per unit of lime feed to the hydrator. All emissions data are based on References 4 through 6.

[b]Emission factors for these operations are presented in Sections 8.20 and 11.2.

[c]No particulate control except for settling that may occur in the stack breeching and chimney base.

[d]When low-sulfur (less than 1 percent, by weight) fuels are used, only about 10 percent of the fuel sulfur is emitted as SO_2. When high-sulfur fuels are used, approximately 50 percent of the fuel sulfur is emitted as SO_2.

[e]This factor should be used when coal is fired in the kiln. Limited data suggest that when only natural gas or oil is fired, particulate emissions after multiple cyclones may be as low as 20 to 30 lb/ton (10 to 15 kg/MT).

[f]Fabric or gravel bed filters, electrostatic precipitators, or wet (most commonly venturi) scrubbers. Particulate concentrations as low as 0.2 lb/ton (0.1 kg/MT) have been achieved using these devices.

[g]When scrubbers are used, less than 5 percent of the fuel sulfur will be emitted as SO_2, even with high-sulfur coal. When other secondary collection devices are used, about 20 percent of the fuel sulfur will be emitted as SO_2 with high-sulfur fuels and less than 10 percent with low-sulfur fuels.

[h]Not available.

[i]Calcimatic kilns generally employ stone preheaters. All factors represent emissions after the kiln exhaust passes through a preheater.

[j]Fabric filters and venturi scrubbers have been employed on calcimatic kilns. No data are available on particulate emissions after secondary control.

[k]Fluidized-bed kilns must employ sophisticated dust collection equipment for process economics; hence, particulate emissions will depend on the efficiency of the control equipment installed.

[l]Some or all of the cooler exhaust is typically used in the kiln as combustion air. Emissions will result only from that fraction that is not recycled to the kiln.

[m]This is a typical particulate loading for atmospheric hydrators following water sprays or wet scrubbers. Limited data suggest particulate emissions from pressure hydrators may be approximately 2 lb/ton (1 kg/MT) of hydrate produced, after wet collectors.

References for Section 8.15

1. Lewis, C.J. and B.B. Crocker. The Lime Industry's Problem of Airborne Dust. J. Air Pol. Control Asso. Vol. 19, No. 1. January 1969.

2. Kirk-Othmer Encyclopedia of Chemical Technology. 2nd Ed. Vol 12. New York, John Wiley and Sons. 1967. p. 414-459.

3. Screening Study for Emissions Characterization From Lime Manufacture. Vulcan-Cincinnati. Cincinnati, Ohio. Prepared for U.S. Environmental Protection Agency, Research Triangle Park, N.C. Under Contract No. 68-02-0299. August 1974.

4. Evans, L.B. et al. An Investigation of the Best Systems of Emission Reduction For Rotary Kilns and Lime Hydrators in the Lime Industry. Standards Support and Environmental Impact Statement. Office of Air Quality Planning and Standards. U.S. Environmental Protection Agency. Research Triangle Park, N.C. February 1976.

5. Source Test Data on Lime Plants from Office of Air Quality Planning and Standards. U.S. Environmental Protection Agency. Research Triangle Park, N.C. 1976.

6. Air Pollutant Emission Factors. TRW Systems Group. Reston, Virginia. Prepared for the National Air Pollution Control Administration, U.S. Department of Health, Education, and Welfare. Washington, D.C. under Contract No. CPA 22-69-119. April 1970. P. 2-2 through 2-19.

8.16 MINERAL WOOL MANUFACTURING

8.16.1 Process Description[1,2]

The product mineral wool used to be divided into three categories: slag wool, rock wool, and glass wool. Today, however, straight slag wool and rock wool as such are no longer manufactured. A combination of slag and rock constitutes the charge material that now yields a product classified as a mineral wool, used mainly for thermal and acoustical insulation.

Mineral wool is made primarily in cupola furnaces charged with blast-furnace slag, silica rock, and coke. The charge is heated to a molten state at about 3000°F (1650°C) and then fed to a blow chamber, where steam atomizes the molten rock into globules that develop long fibrous tails as they are drawn to the other end of the chamber. The wool blanket formed is next conveyed to an oven to cure the binding agent and then to a cooler.

8.16.2 Emissions and Controls

The major source of emissions is the cupola or furnace stack. Its discharge consists primarily of condensed fumes that have volatilized from the molten charge and gases such as sulfur oxides and fluorides. Minor sources of particulate emissions include the blowchamber, curing oven, and cooler. Emission factors for various stages of mineral wool processing are shown in Table 8.16-1. The effect of control devices on emissions is shown in footnotes to the table.

Table 8.16-1. EMISSION FACTORS FOR MINERAL WOOL PROCESSING WITHOUT CONTROLS[a]
EMISSION FACTOR RATING: C

Type of process	Particulates		Sulfur oxides	
	lb/ton	kg/MT	lb/ton	kg/MT
Cupola	22	11	0.02	0.01
Reverberatory furnace	5	2.5	Neg[b]	Neg
Blow chamber[c]	17	8.5	Neg	Neg
Curing oven[d]	4	2	Neg	Neg
Cooler	2	1	Neg	Neg

[a]Reference 2. Emission factors expressed as units per unit weight of charge.
[b]Negligible.
[c]A centrifugal water scrubber can reduce particulate emissions by 60 percent.
[d]A direct-flame afterburner can reduce particulate emissions by 50 percent.

References for Section 8.16

1. Duprey, R. L. Compilation of Air Pollutant Emission Factors. U.S. DHEW, PHS, National Center for Air Pollution Control. Durham, N. C. PHS Publication Number 999-AP-42. 1968. p. 39-40.

2. Spinks, J. L. Mineral Wool Furnaces. In: Air Pollution Engineering Manual. Danielson, J. A. (ed.). U.S. DHEW, PHS, National Center for Air Pollution Control. Cincinnati, Ohio. PHS Publication Number 999-AP-40. 1967. p. 343-347.

8.17 PERLITE MANUFACTURING

8.17.1 Process Description[1,2]

Perlite is a glassy volcanic rock consisting of oxides of silicon and aluminum combined as a natural glass by water of hydration. By a process called exfoliation, the material is rapidly heated to release water of hydration and thus to expand the spherules into low-density particles used primarily as aggregate in plaster and concrete. A plant for the expansion of perlite consists of ore unloading and storage facilities, a furnace-feeding device, an expanding furnace, provisions for gas and product cooling, and product-classifying and product-collecting equipment. Vertical furnaces, horizontal stationary furnaces, and horizontal rotary furnaces are used for the exfoliation of perlite, although the vertical types are the most numerous. Cyclone separators are used to collect the product.

8.17.2 Emissions and Controls[2]

A fine dust is emitted from the outlet of the last product collector in a perlite expansion plant. The fineness of the dust varies from one plant to another, depending upon the desired product. In order to achieve complete control of these particulate emissions, a baghouse is needed. Simple cyclones and small multiple cyclones are not adequate for collecting the fine dust from perlite furnaces. Table 8.17-1 summarizes the emissions from perlite manufacturing.

Table 8.17-1. PARTICULATE EMISSION FACTORS FOR PERLITE EXPANSION FURNACES WITHOUT CONTROLS[a]
EMISSION FACTOR RATING: C

Type of furnace	Emissions[b]	
	lb/ton	kg/MT
Vertical	21	10.5

[a]Reference 3. Emission factors expressed as units per unit weight of charge.

[b]Primary cyclones will collect 80 percent of the particulates above 20 micrometers, and baghouses will collect 96 percent of the particles above 20 micrometers.[2]

References for Section 8.17

1. Duprey, R. L. Compilation of Air Pollutant Emission Factors. U.S. DHEW, PHS, National Center for Air Pollution Control. Durham, N.C. PHS Publication Number 999-AP-42. 1968. p. 39.

2. Vincent, E. J. Perlite-Expanding Furnaces. In: Air Pollution Engineering Manual. Danielson, J. A. (ed.). U.S. DHEW, PHS, National Center for Air Pollution Control. Cincinnati, Ohio. PHS Publication Number 999-AP-40. 1967. p. 350-352.

3. Unpublished data on perlite expansion furnace. National Center for Air Pollution Control. Cincinnati, Ohio. July 1967.

8.18 PHOSPHATE ROCK PROCESSING

8.18.1 General

The processing of phosphate rock for use in fertilizer manufacture consists of beneficiation, drying or calcining, and grinding stages. Since the primary use of phosphate rock is in the manufacture of phosphatic fertilizer, only those phosphate rock processing operations associated with fertilizer manufacture are discussed here. A flow diagram of these operations is shown in Figure 8.18-1.

Phosphate rock from the mines is first sent to beneficiation units to remove impurities. Steps used in beneficiation depend on the type of rock. A typical beneficiation unit for processing phosphate rock mined in Florida (about 78 percent of United States plant capacity in 1978) begins with wet screening to separate pebble rock (smaller than 1/4 inch and larger than 14 mesh) from the balance of the rock. The pebble rock is sent to the rock dryer, and the fraction smaller than 14 mesh is slurried and treated by two-stage flotation. The flotation process uses hydrophilic or hydrophobic chemical reagents with aeration to separate suspended particles. Phosphate rock mined in North Carolina (about 8 percent of United States capacity in 1978) does not contain pebble rock. In processing this type of phosphate, the fraction larger than 1/4 inch is sent to a hammer mill and then recycled to the screens, and the fraction less than 14 mesh is treated by two-stage floation, like Florida rock. The sequence of beneficiation steps at plants processing Western hard phosphate rock (about 10 percent of United States capacity in 1978) typically includes crushing, classification and filtration. The size reduction is carried out in several steps, the last of which is a slurry grinding process using a wet rod mill to reduce the rock to particles about the size of beach sand. The slurry is then classified by size in hydroclones to separate tailings (clay and particles smaller than about 100 mesh), and the rock is then filtered from the slurry. Beneficiated rock is commonly stored in open wet piles. It is reclaimed from these piles by one of several methods (including skip loaders, underground conveyor belts, and aboveground reclaim trolleys) and is then conveyed to the next processing step.

The wet beneficiated phosphate rock is then dried or calcined, depending on its organic content. Florida rock is relatively free of organics and is dried in direct fired dryers at about 250°F (120°C), where the moisture content of the rock falls from 10-15 percent to 1-3 percent. Both rotary and fluidized bed dryers are used, but rotary dryers are more common. Most dryers are fired with natural gas or fuel oil (No. 2 or No. 6), with many equipped to burn more than one type of fuel. Unlike Florida rock, phosphate rock mined from other reserves contains organics and must be heated to 1400° - 1600°F (760°C - 870°C) to remove them. Fluidized bed calciners are most commonly used for this purpose, but rotary calciners are also used. After drying, the rock is usually conveyed to storage silos on weather protected conveyors and, from there, to grinding mills.

Table 8.18-1. UNCONTROLLED PARTICULATE EMISSION FACTORS FOR PHOSPHATE ROCK PROCESSING[a]

EMISSION FACTOR RATING: B

Type of Source	Emissions	
	lb/ton	kg/MT
Drying[b]	5.7	2.9
	(1.4 - 14.0)	(0.7 - 7.0)
Calcining[b]	15.4	7.7
	(3.8 - 38.0)	(1.9 - 19.0)
Grinding[b]	1.5	0.8
	(0.4 - 4.0)	(0.2 - 2.0)
Transfer and storage[c]	2	1
Open storage piles[d]	40	20

[a]Emission factors expressed as units per unit weight of processed phosphate rock. Ranges in parentheses.
[b]Reference 1.
[c]Reference 3.
[d]Reference 4.

Dried or calcined rock is ground in roll or ball mills to a fine powder, typically specified as 60 percent by weight passing a 200 mesh sieve. Rock is fed into the mill by a rotary valve, and ground rock is swept from the mill by a circulating air stream. Product size classification is provided by "revolving whizzers" and by an air classifier. Oversize particles are recycled to the mill, and product size particles are separated from the carrying air stream by a cyclone.

8.18.2 Emissions and Controls

The major emission sources for phosphate rock processing are dryers, calciners and grinders. These sources emit particulates in the form of fine rock dust. Emission factors for these sources are presented in Table 8.18-1. Beneficiation has no significant emission potential, since the operations involve slurries of rock and water.

Emissions from dryers depend on several factors, including fuel types, air flow rates, product moisture content, speed of rotation, and the type of rock. The pebble portion of Florida rock receives much less washing than the concentrate rock from the floation processes. It has a higher clay content and generates more emissions when dried. No significant differences have been noted in gas volume or emissions from fluid bed or rotary dryers. A typical dryer processing 250 tons per hour (230 metric tons per hour) of rock will discharge between 70,000 and 100,000 dscfm (31 - 45 dry nm^3/sec) of gas, with a particulate loading of 0.5 to

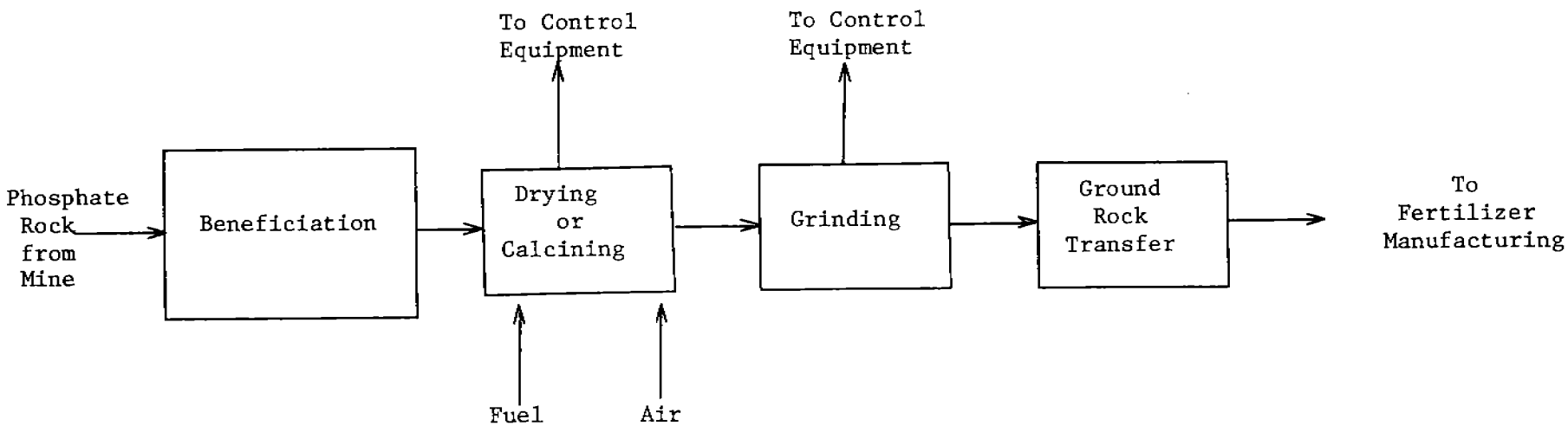

Figure 8.18-1. Typical flowsheet for processing phosphate rock.

5 grams/dscf (1.2 - 12 grams/dry nm^3). A particle size distribution of the uncontrolled dust emissions is given in Table 8.18-2.

Scrubbers are most commonly used to control emissions from phosphate rock dryers, but electrostatic precipitators are also used. Fabric filters are not currently being used to control emissions from dryers. Venturi scrubbers with a relatively low pressure loss (12 inches of water, or 3000 Pa) may remove 80 to 99 percent of particulates 1 to 10 micrometers in diameter, and 10 to 80 percent of particulates less than 1 micrometer. High pressure drop scrubbers (30 inches of water, or 7500 Pa) may have collection efficiencies of 96 to 99.9 percent for 1-10 micrometer particulates and 80 to 86 percent for particles less than 1 micrometer. Electrostatic precipitators may remove 90 to 99 percent of all particulates. Another control technique for phosphate rock dryers is use of the wet grinding process, in which the drying step is eliminated.

A typical 50 ton per hour (45 MT/hour) calciner will discharge about 30,000 to 60,000 dscfm (13 - 27 dry nm^3/sec) of exhaust gas, with a particulate loading of 0.5 to 5 g/dscf (1.2 - 12 g/dry nm^3). As shown in Table 8.18-2, the size distribution of the uncontrolled calciner emissions is very similar to that of the dryer emissions. As with dryers, scrubbers are the most common control devices used for calciners. At least one operating calciner is equipped with a precipitator. Fabric filters could also be applied.

Oil fired dryers and calciners have a potential to emit sulfur oxides when high sulfur residual fuel oils are burned. However, phosphate rock typically contains about 55 percent CaO, which reacts with the SO_x to form calcium sulfites and sulfates and thus reduces SO_x emissions.

Low levels of gaseous fluoride emissions (0.002 lb/ton or 0.001 kg/MT) of rock processed from calciners have been reported, although other reports indicate that the calcination temperature is too low to drive off gaseous fluorides. Fluoride emissions from dryers are negligible.

A typical grinder of 50 tons per hour (45 MT/hr) capacity will discharge about 3500 to 5500 dscfm (1.6 - 2.5 dry nm^3/sec) of air containing 0.5 to 5.0 gr/dscf (1.2 - 12 g/dry nm^3) of particulates. The air discharged is "tramp air" which infiltrates the circulating streams. To avoid fugitive emissions of rock dust, these streams are operated at negative pressure. Fabric filters, and sometimes scrubbers, are used to control grinder emissions. Substituting wet grinding for conventional grinding would reduce the potential for particulate emissions.

Emissions from material handling systems are difficult to quantify, since several different systems are employed to convey rock. Moreover, a large part of the emission potential for these operations is fugitives. Conveyor belts moving dried rock are usually covered and sometimes

enclosed. Transfer points are sometimes hooded and evacuated. Bucket elevators are usually enclosed and evacuated to a control device, and ground rock is generally conveyed in totally enclosed systems with well defined and easily controlled discharge points. Dry rock is normally stored in enclosed bins or silos which are vented to the atmosphere, with fabric filters frequently used to control emissions.

Table 8.18-2. PARTICLE SIZE DISTRIBUTION OF EMISSIONS FROM PHOSPHATE ROCK DRYERS AND CALCINERS[a]

Diameter (μm)	Percent Less Than Size	
	Dryers	Calciners
10.0	82	96
5.0	60	81
2.0	27	52
1.0	11	26
0.8	7	10
0.5	3	5

[a]Reference 1.

References for Section 8.18

1. Background Information: Proposed Standards for Phosphate Rock Plants (Draft), EPA-450/3-79-017, U. S. Environmental Protection Agency, Research Triangle Park, NC, September 1979.

2. "Sources of Air Pollution and Their Control", Air Pollution, Volume III, 2nd Ed., Arthur Stern, ed., New York, Academic Press, 1968, pp. 221-222.

3. Unpublished data from phosphate rock preparation plants in Florida, Midwest Research Institute, Kansas City, MO, June 1970.

4. Control Techniques for Fluoride Emissions, Internal document, Office of Air Quality Planning and Standards, U. S. Environmental Protection Agency, Research Triangle Park, NC, pp. 4-34, 4-36 and 4-46.

8.19 CONSTRUCTION AGGREGATE PROCESSING

General[1-2]

The construction aggregate industry covers a range of subclassifications of the nonmetallic minerals industry (see Section 8.23, Metallic Minerals Processing, for information on that similar activity). Many operations and processes are common to both groups, including mineral extraction from the earth, loading, unloading, conveying, crushing, screening, and loadout. Other operations are restricted to specific subcategories. These include wet and dry fine milling or grinding, air classification, drying, calcining, mixing, and bagging. The latter group of operations is not generally associated with the construction aggregate industry but can be conducted on the same raw materials used to produce aggregate. Two examples are processing of limestone and sandstone. Both substances can be used as construction materials and may be processed further for other uses at the same location. Limestone is a common source of construction aggregate, but it can be further milled and classified to produce agricultural limestone. Sandstone can be processed into construction sand and also can be wet and/or dry milled, dried, and air classified into industrial sand.

The construction aggregate industry can be categorized by source, mineral type or form, wet versus dry, washed or unwashed, and end uses, to name but a few. The industry is divided in this document into Section 8.19.1, Sand And Gravel Processing, and Section 8.19.2, Crushed Stone Processing. Sections on other categories of the industry will be published when data on these processes become available.

Uncontrolled construction aggregate processing can produce nuisance problems and can have an effect upon attainment of ambient particulate standards. However, the generally large particles produced often can be controlled readily. Some of the individual operations such as wet crushing and grinding, washing, screening, and dredging take place with "high" moisture (more than about 1.5 to 4.0 weight percent). Such wet processes do not generate appreciable particulate emissions.

References for Section 8.19

1. Air Pollution Control Techniques for Nonmetallic Minerals Industry, EPA-450/3-82-014, U. S. Environmental Protection Agency, Research Triangle Park, NC, August 1982.

2. Review Emissions Data Base And Develop Emission Factors For The Construction Aggregate Industry, Engineering-Science, Inc., Arcadia, CA, September 1984.

8.19.1 SAND AND GRAVEL PROCESSING

8.19.1.1 Process Description[1-3]

Deposits of sand and gravel, the consolidated granular materials resulting from the natural disintegration of rock or stone, are generally found in near-surface alluvial deposits and in subterranean and subaqueous beds. Sand and gravel are products of the weathering of rocks and unconsolidated or poorly consolidated materials and consist of siliceous and calcareous components. Such deposits are common throughout the country.

Depending upon the location of the deposit, the materials are excavated with power shovels, draglines, front end loaders, suction dredge pumps or other apparatus. In rare situations, light charge blasting is done to loosen the deposit. The materials are transported to the processing plant by suction pump, earth mover, barge, truck or other means. The processing of sand and gravel for a specific market involves the use of different combinations of washers, screens and classifiers to segregate particle sizes; crushers to reduce oversize material; and storage and loading facilities. Crushing operations, when used, are designed to reduce production of fines, which often must be removed by washing. Therefore, crusher characteristics, size reduction ratios and throughput, among other factors, are selected to obtain the desired product size distribution.

In many sand and gravel plants, a substantial portion of the initial feed bypasses any crushing operations. Some plants do no crushing at all. After initial screening, material is conveyed to a portion of the plant called the wet processing section, where wet screening and silt removal are conducted to produce washed sand and gravel. Negligible air emissions are expected from the wet portions of a sand and gravel plant.

Industrial sand processing is similar to that of construction sand, insofar as the initial stages of crushing and screening are concerned. Industrial sand has a high (90 to 99 percent) quartz or silica content and is frequently obtained from quartz rich deposits of sand or sandstone. At some plants, after initial crushing and screening, a portion of the sand may be diverted to construction sand use. Industrial sand processes not associated with construction sand include wet milling, scrubbing, desliming, flotation, drying, air classification and cracking of sand grains to form very fine sand products.

8.19.1.2 Emissions and Controls[1]

Dust emissions can occur from many operations at sand and gravel processing plants, such as conveying, screening, crushing, and storing operations. Generally, these materials are wet or moist when handled, and process emissions are often negligible. A substantial portion of these emissions may consist of heavy particles that settle out within the plant. Emission factors (for process or fugitive dust sources) from sand and gravel processing plants are shown in Table 8.19.1-1. (If processing is dry, expected emissions could be similar to those given in Section 8.19.2, Crushed Stone Processing).

Emission factors for crushing wet materials can be applied directly or on a dry basis, with a control efficiency credit being given for use of wet

materials (defined as 1.5 to 4.0 percent moisture content or greater) or wet suppression. The latter approach is more consistent with current practice.

The single valued fugitive dust emission factors given in Table 8.19.1-1 may be used for an approximation when no other information exists. Empirically derived emission factor equations presented in Section 11.2 of this document are preferred and should be used when possible. Each of those equations has been developed for a single source operation or dust generating mechanism which crosses industry lines, such as vehicle traffic on unpaved roads. The predictive equation explains much of the observed variance in measured emission factors by relating emissions to the differing source variables. These variables may be grouped as (1) measures of source activity or expended energy (e. g., feed rate, or speed and weight of a vehicle traveling on an unpaved road), (2) properties of the material being disturbed (e. g., moisture content, or content of suspendable fines in the material) and (3) climate (e. g., number of precipitation free days per year, when emissions tend to a maximum).

Because predictive equations allow for emission factor adjustment to specific conditions, they should be used instead of the factors given in Table 8.19.1-1 whenever emission estimates are needed for sources in a specific sand and gravel processing facility. However, the generally higher quality ratings assigned to these equations are applicable only if (1) reliable values of correction parameters have been determined for the specific sources of interest, and (2) the correction parameter values lie within the ranges found in developing the equations. Section 11.2 lists measured properties of aggregate materials used in operations similar to the sand and gravel industry, and these properties can be used to approximate correction parameter values for use in the predictive emission factor equations, in the event that site specific values are not available. Use of mean correction parameter values from Chapter 11 reduces the quality ratings of the emission factor equations by at least one level.

Since emissions from sand and gravel operations usually are in the form of fugitive dust, control techniques applicable to fugitive dust sources are appropriate. Some successful control techniques used for haul roads are application of dust suppressants, paving, route modifications, soil stabilization, etc.; for conveyors, covering and wet suppression; for storage piles, wet dust suppression, windbreaks, enclosure and soil stablizers; and for conveyor and batch transfer points (loading and unloading, etc.), wet suppression and various methods to reduce freefall distances (e. g., telescopic chutes, stone ladders, and hinged boom stacker conveyors); for screening and other size classification, covering and wet suppression.

Wet suppression techniques include application of water, chemicals and/or foam, usually at crusher or conveyor feed and/or discharge points. Such spray systems at transfer points and on material handling operations have been estimated to reduce emissions 70 to 95 percent.[7] Spray systems can also reduce loading and wind erosion emissions from storage piles of various materials 80 to 90 percent.[8] Control efficiencies depend upon local climatic conditions, source properties and duration of control effectiveness. Wet suppression has a carryover effect downstream of the point of application of water or other wetting agents, as long as the surface moisture content is high enough to cause the fines to adhere to the larger rock particles.

TABLE 8.19.1-1. UNCONTROLLED PARTICULATE EMISSION FACTORS FOR SAND AND GRAVEL PROCESSING PLANTS[a]

Uncontrolled Operation	Emissions by Particle Size Range (aerodynamic diameter)[b]				Emission Factor Rating
	Total Particulate	TSP ($\leq$ 30 μm)	PM_{10} ($\leq$ 10 μm)	Units	
Process Sources[c]					
Primary or secondary crushing (wet)	NA	0.009 (0.018)	NA	kg/Mg (lb/ton)	D
Open Dust Sources[c]					
Screening[d]					
Flat screens (dry product)	NA	0.08 (0.16)	0.06 (0.12)	kg/Mg (lb/ton)	C
Continous drop[c]					
Transfer station	0.014 (0.029)	NA	NA	kg/Mg (lb/ton)	E
Pile formation - stacker	NA	0.065 (0.13)	0.03 (0.06)[e]	kg/Mg (lb/ton)	E
Batch drop[c]					
Bulk loading	0.12 (0.024)	0.028 (0.056)[f]	0.0012 (0.0024)[f]	kg/Mg (lb/ton)	E
Active storage piles[g]					
Active day	NA	14.8 (13.2)	7.1 (6.3)[e]	kg/hectare/day[h] (lb/acre/day)	D
Inactive day (wind erosion only)	NA	3.9 (3.5)	1.9 (1.7)[e]	kg/hectare/day[h] (lb/acre/day)	D
Unpaved haul roads					
Wet materials	i	i	i		D

[a]NA = not available. TSP = total suspended particulate. Predictive emission factor equations, which generally provide more accurate estimates of emissions under specific conditions, are presented in Chapter 11. Factors for open dust sources are not necessarily representative of the entire industry or of a "typical" situtation.
[b]Total particulate is airborne particles of all sizes in the source plume. TSP is what is measured by a standard high volume sampler (see Section 11.2).
[c]References 5-9.
[d]References 4-5. For completely wet operations, emissions are likely to be negligible.
[e]Extrapolation of data, using k factors for appropriate operation from Chapter 11.
[f]For physical, not aerodynamic, diameter.
[g]Reference 6. Includes the following distinct source operations in the storage cycle: (1) loading of aggregate onto storage piles (batch or continuous drop operations), (2) equipment traffic in storage areas, (3) wind erosion of pile (batch or continuous drop operations). Assumes 8 to 12 hours of activity/24 hours.
[h]Kg/hectare (lb/acre) of storage/day (includes areas among piles).
[i]See Section 11.2 for empirical equations.

References for Section 8.19.1

1. Air Pollution Control Techniques For Nonmetallic Minerals Industry, EPA-450/3-82-014, U. S. Environmental Protection Agency, Research Triangle Park, NC, August 1982.

2. S. Walker, "Production of Sand and Gravel", Circular Number 57, National Sand and Gravel Association, Washington, DC, 1954.

3. Development Document For Effluent Limitations Guidelines And Standards - Mineral Mining And Processing Industry, EPA-440/1-76-059b, U. S. Environmental Protection Agency, Washington, DC, July 1979.

4. Review Emissions Data Base And Develop Emission Factors For The Construction Aggregate Industry, Engineering-Science, Inc., Arcadia, CA, September 1984.

5. "Crushed Rock Screening Source Test Reports on Tests Performed at Conrock Corp., Irwindale and Sun Valley, CA Plants", Engineering-Science, Inc., Arcadia, CA, August 1984.

6. C. Cowherd, Jr., et al., Development Of Emission Factors For Fugitive Dust Sources, EPA-450/3-74-037, U. S. Environmental Protection Agency, Research Triangle Park, NC, June 1974.

7. R. Bohn, et al., Fugitive Emissions From Integrated Iron And Steel Plants, EPA-600/2-78-050, U. S. Environmental Protection Agency, Washington, DC, March 1978.

8. G. A. Jutze and K. Axetell, Investigation Of Fugitive Dust, Volume I: Sources, Emissions and Control, EPA-450/3-74-036a, U. S. Environmental Protection Agency, Research Triangle Park, NC, June 1974.

9. Fugitive Dust Assessment At Rock And Sand Facilities In The South Coast Air Basin, Southern California Rock Products Association and Southern California Ready Mix Concrete Association, P.E.S., Santa Monica, CA, November 1979.

8.19.2 CRUSHED STONE PROCESSING

8.19.2.1 Process Description[1]

Major rock types processed by the rock and crushed stone industry include limestone, dolomite, granite, traprock, sandstone, quartz and quartzite. Minor types include calcareous marl, marble, shell and slate. Industry classifications vary considerably and, in many cases, do not reflect actual geological definitions.

Rock and crushed stone products generally are loosened by drilling and blasting, then are loaded by power shovel or front end loader and transported by heavy earth moving equipment. Techniques used for extraction vary with the nature and location of the deposit. Further processing may include crushing, screening, size classification, material handling, and storage operations. All of these processes can be significant sources of dust emissions if uncontrolled. Some processing operations also include washing, depending on rock type and desired product.

Quarried stone normally is delivered to the processing plant by truck and is dumped into a hoppered feeder, usually a vibrating grizzly type, or onto screens, as illustrated in Figure 8.19.2-1. These screens separate or scalp large boulders from finer rocks that do not require primary crushing, thus reducing the load to the primary crusher. Jaw, or gyratory, crushers are usually used for initial reduction. The crusher product, normally 7.5 to 30 centimeters (3 to 12 inches) in diameter, and the grizzly throughs (undersize material) are discharged onto a belt conveyor and usually are transported either to secondary screens and crushers or to a surge pile for temporary storage.

Further screening generally separates the process flow into either two or three fractions (oversize, undersize and throughs) ahead of the secondary crusher. The oversize is discharged to the secondary crusher for further reduction, and the undersize usually bypasses the secondary crusher. The throughs sometimes are separated, because they contain unwanted fines, and are stockpiled as crusher run material. Gyratory crushers or cone crushers are commonly used for secondary crushing, although impact crushers are sometimes found.

The product of the secondary crushing stage, usually 2.5 centimeters (1 inch) diameter or less, is transported to secondary screens for further sizing. Oversize material is sent back for recrushing. Depending on rock type and desired product, tertiary crushing or grinding may be necessary, usually using cone crushers or hammermills. (Rod mills, ball mills and hammer mills normally are used in milling operations, which are not considered a part of the construction aggregate industry.) The product from tertiary crushing may be conveyed to a classifier, such as a dry vibrating screen system, or to an air separator. Any oversize is returned to the tertiary crusher for further reduction. At this point, end products of the desired grade are conveyed or trucked directly to finished product bins or to open area stockpiles.

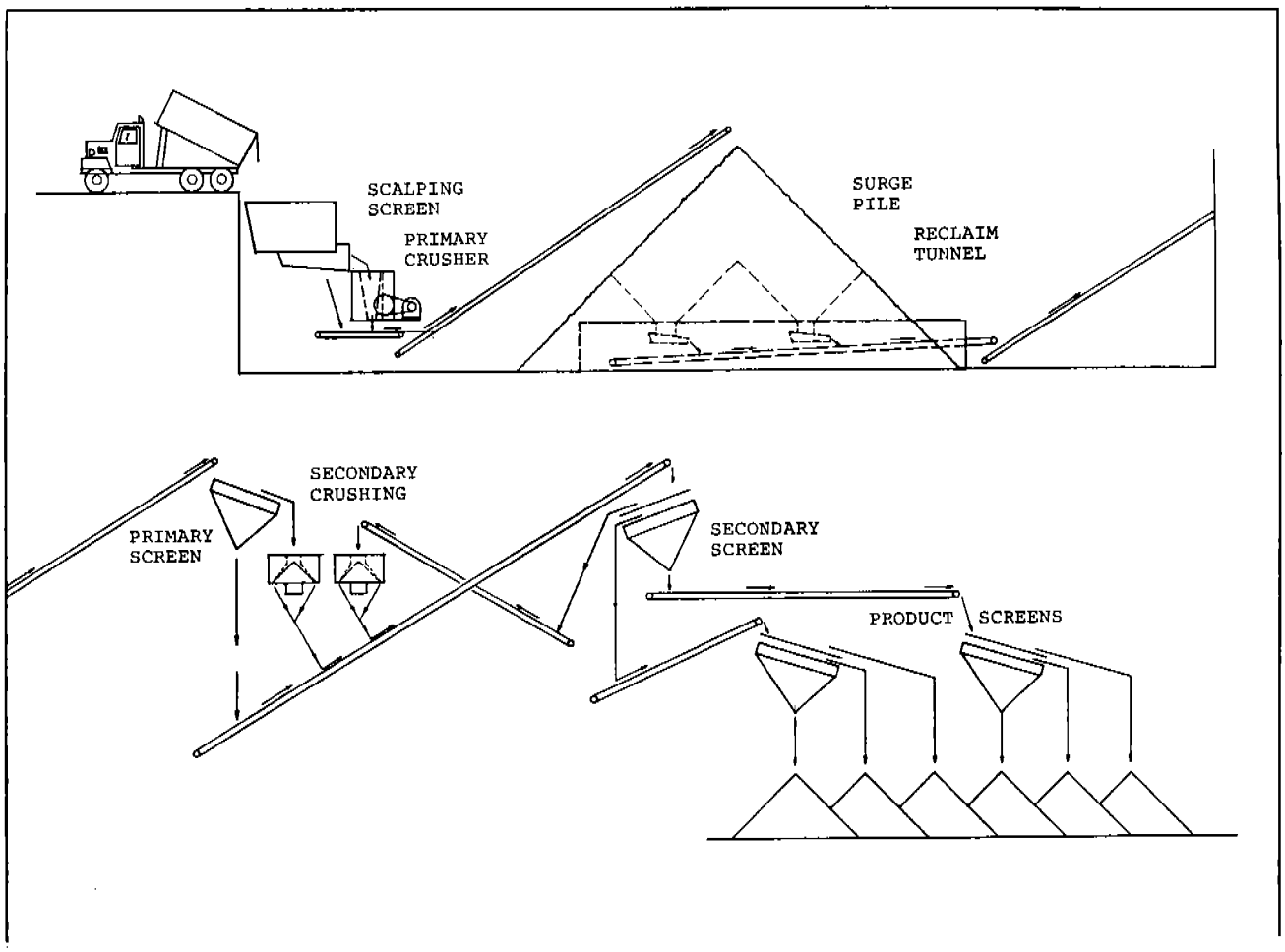

FIGURE 8.19.2-1. TYPICAL STONE PROCESSING PLANT

In certain cases, stone washing is required to meet particular end product specifications or demands, as with concrete aggregate processing. Crushed and broken stone normally are not milled but are screened and shipped to the consumer after secondary or tertiary crushing.

8.19.2.2 Emissions and Controls[1-3]

Dust emissions occur from many operations in stone quarrying and processing. A substantial portion of these emissions consists of heavy particles that may settle out within the plant. As in other operations, crushed stone emission sources may be categorized as either process sources or fugitive dust sources. Process sources include those for which emissions are amenable to capture and subsequent control. Fugitive dust sources generally involve the reentrainment of settled dust by wind or machine movement. Factors affecting emissions from either source category include the type, quantity and surface moisture content of the stone processed; the type of equipment and operating practices employed; and topographical and climatic factors.

Of geographic and seasonal factors, the primary variables affecting uncontrolled particulate emissions are wind and material moisture content. Wind parameters vary with geographical location, season and weather. It can be expected that the level of emissions from unenclosed sources (principally fugitive dust sources) will be greater during periods of high winds. The material moisture content also varies with geographic location, season and weather. Therefore, the levels of uncontrolled emissions from both process emission sources and fugitive dust sources generally will be greater in arid regions of the country than in temperate ones, and greater during the summer months because of a higher evaporation rate.

The moisture content of the material processed can have a substantial effect on uncontrolled emissions. This is especially evident during mining, initial material handling, and initial plant process operations such as primary crushing. Surface wetness causes fine particles to agglomerate on, or to adhere to, the faces of larger stones, with a resulting dust suppression effect. However, as new fine particles are created by crushing and attrition, and as the moisture content is reduced by evaporation, this suppressive effect diminishes and may disappear. Depending on the geographic and climatic conditions, the moisture content of mined rock may range from nearly zero to several percent. Since moisture content is usually expressed on a basis of overall weight percent, the actual moisture amount per unit area will vary with the size of the rock being handled. On a constant mass fraction basis, the per unit area moisture content varies inversely with the diameter of the rock. Therefore, the suppressive effect of the moisture depends on both the absolute mass water content and the size of the rock product. Typically, a wet material will contain 1.5 to 4 percent water or more.

There are a large number of material, equipment and operating factors which can influence emissions from crushing. These include: (1) rock type, (2) feed size and distribution, (3) moisture content, (4) throughput rate, (5) crusher type, (6) size reduction ratio, and (7) fines content. Insufficient data are available to present a matrix of rock crushing emission factors detailing the above classifications and variables. Data available from which to prepare emission factors also vary considerably, for both extractive testing and plume profiling. Emission factors from extractive testing are generally

higher than those based upon plume profiling tests, but they have a greater degree of reliability. Some test data for primary crushing indicate higher emissions than from secondary crushing, although factors affecting emission rates and visual observations suggest that the secondary crushing emission factor, on a throughput basis, should be higher. Table 8.19.2-1 shows single factors for either primary or secondary crushing reflecting a combined data base. An emission factor for tertiary crushing is given, but it is based on extremely limited data. All factors are rated low because of the limited and highly variable data base.

TABLE 8.19.2-1. UNCONTROLLED PARTICULATE EMISSION FACTORS FOR CRUSHING OPERATIONS[a]

Type of Crushing[b]	Particulate Matter		Emission Factor Rating
	$\leq$ 30 μm kg/Mg (lb/ton)	$\leq$ 10 μm kg/Mg (lb/ton)	
Primary or secondary			
Dry material	0.14 (0.28)	0.0085 (0.017)	D
Wet material[c]	0.009 (0.018)	-	D
Tertiary, dry material[d]	0.93 (1.85)	-	E

[a]Based on actual feed rate of raw material entering the particular operation. Emissions will vary by rock type, but data available are insufficient to characterize these phenomena. Dash = no data.
[b]References 4-5. Factors are uncontrolled. Typical control efficiencies: cyclone, 70 - 80%; fabric filter, 99%; wet spray systems, 70 - 90%.
[c]References 5-6. Refers to crushing of rock either naturally wet or after moistened to 1.5 to 4 weight % by use of wet suppression techniques.
[d]Range of values used to calculate emission factor was 0.0008 - 1.38 kg/Mg.

There are no screening emission factors presented in this Section. However, the screening emission factors given in Section 8.19.1, Sand and Gravel Processing, should be similar to those expected from screening crushed rock. Milling of fines is also not included in this Section as this operation is normally associated with non construction aggregate end uses and will be covered elsewhere in the future when information is adequate.

Open dust source (fugitive dust) emission factors for stone quarrying and processing are presented in Table 8.19.2-2. These factors have been determined through tests at various quarries and processing plants.[6-7] The single valued open dust emission factors given in Table 8.19.2-2 may be used when no other information exists. Empirically derived emission factor equations presented in Section 11.2 of this document are preferred and should be used when possible. Because these predictive equations allow the adjustment of emission factors for

TABLE 8.19.2-2. UNCONTROLLED PARTICULATE EMISSION FACTORS FOR OPEN DUST SOURCES AT CRUSHED STONE PLANTS

Operation	Material	Emissions by Particle Size Range (aerodynamic diameter)[a]			Emission Factor Rating
		TSP	PM_{10}		
		$\leq$ 30 μm	$\leq$ 10 μm	Units[b]	
Quarrying					
Wet drilling	Unfractured Stone[c]	0.4 (0.0008)	0.04 (0.0001)	g/Mg (lb/ton)	E
Blasting	Unfractured Stone[c]	$\frac{961(A)^{0.8}}{(D)^{1.8} \times (M)^{1.9}}$ [d]	0.2 x TSP[d]	lb/blast	D
Batch Drop					
Truck unloading	Fractured Stone[c]	0.17 (0.0003)	0.008 (0.00002)	g/Mg (lb/ton)	D
Truck loading					
conveyor	Crushed Stone[e]	0.17 (0.0003)	0.05 (0.0001)	g/Mg (lb/ton)	E
Front end loader	Crushed Stone[f]	29.0 (0.06)	NA	g/Mg (lb/ton)	E
Conveying					
Tunnel Belt	Crushed Stone[c]	1.7 (0.0034)	0.11 (0.0002)	g/Mg (lb/ton)	E
Unpaved haul roads		g	g		

[a]Total suspended particulate (TSP) is that measured by a standard high volume sampler (See Section 11.2). Use of empirical equations in Chapter 11 is preferred to single value factors in this Table. Factors in this Table are provided for convenience in quick approximations and/or for occasions when equation variables can not be reasonably estimated. NA = not available.

[b]Expressed as g/Mg (lb/ton) of material through primary crusher, except for front end loading, g/Mg (lb/ton) of material transferred, and blasting which is kg/blast.

[c]Reference 2.

[d]Where A = Area blasted in ft^2; D = Depth of blast in ft; and M = Moisture content; (Adapted from Table 8.24-2. Use moisture content of 1 - 2% and depth equal to depth of drill or depth from blast to vertical face, whichever is less.) Multiply TSP value by 0.2 to estimate quantity of particulate $\leq$ 10 μm (PM_{10}).

[e]Reference 3.

[f]Reference 6.

[g]See Section 11.2 for empirical equations.

specific source conditions, these equations should be used instead of those in Table 8.19.2-2, whenever emission estimates applicable to specific stone quarrying and processing facility sources are needed. Chapter 11.2 provides measured properties of crushed limestone, as required for use in the predictive emission factor equations.

References for Section 8.19.2

1. Air Pollution Control Techniques for Nonmetallic Minerals Industry, EPA-450/3-82-014, U. S. Environmental Protection Agency, Research Triangle Park, NC, August 1982.

2. P. K. Chalekode, et al., Emissions from the Crushed Granite Industry: State of the Art, EPA-600/2-78-021, U. S. Environmental Protection Agency, Washington, DC, February 1978.

3. T. R. Blackwood, et al., Source Assessment: Crushed Stone, EPA-600/2-78-004L, U. S. Environmental Protection Agency, Washington, DC, May 1978.

4. F. Record and W. T. Harnett, Particulate Emission Factors for the Construction Aggregate Industry, Draft Report, GCA-TR-CH-83-02, EPA Contract No. 68-02-3510, GCA Corporation, Chapel Hill, NC, February 1983.

5. Review Emission Data Base and Develop Emission Factors for the Construction Aggregate Industry, Engineering-Science, Inc., Arcadia, CA, September 1984.

6. C. Cowherd, Jr., et al., Development of Emission Factors for Fugitive Dust Sources, EPA-450/3-74-037, U. S. Environmental Protection Agency, Research Triangle Park, NC, June 1974.

7. R. Bohn, et al., Fugitive Emissions from Integrated Iron and Steel Plants, EPA-600/2-78-050, U. S. Environmental Protection Agency, Washington, DC, March 1978.

SECTION 8.20

This Section is reserved for future use.

8.21 COAL CONVERSION

In addition to its direct use for combustion, coal can be converted to organic gases and liquids, thus allowing the continued use of convential oil and gas fired processes when oil and gas supplies are not available. Currently, there is little commercial coal conversion in the United States. Consequently, it is very difficult to determine which of the many conversion processes will be commercialized in the future. The following sections provide general process descriptions and general emission discussions for high-, medium- and low-Btu gasification (gasifaction) processes and for catalytic and solvent extraction liquefaction processes.

8.21.1 Process Description[1-2]

8.21.1.1 Gasification - One means of converting coal to an alternate form of energy is gasification. In this process, coal is combined with oxygen and steam to produce a combustible gas, waste gases, char and ash. The more than 70 coal gasification systems currently available or being developed (1979) can be classified by the heating value of the gas produced and by the type of gasification reactor used. High-Btu gasification systems produce a gas with a heating value greater than 900 Btu/scf (33,000 J/m^3). Medium-Btu gasifiers produce a gas having a heating value between 250 - 500 Btu/scf (9,000 - 19,000 J/m^3). Low-Btu gasifiers produce a gas having a heating value of less than 250 Btu/scf (9,000 J/m^3).

The majority of the gasification systems consist of four operations: coal pretreatment, coal gasification, raw gas cleaning and gas beneficiation. Each of these operations consists of several steps. Figure 8.21-1 is a flow diagram for an example coal gasification facility.

Generally, any coal can be gasified if properly pretreated. High moisture coals may require drying. Some caking coals may require partial oxidation to simplify gasifier operation. Other pretreatment operations include crushing, sizing, and briqueting of fines for feed to fixed bed gasifiers. The coal feed is pulverized for fluid or entrained bed gasifiers.

After pretreatment, the coal enters the gasification reactor, where it reacts with oxygen and steam to produce a combustible gas. Air is used as the oxygen source for making low-Btu gas, and pure oxygen is used for making medium- and high-Btu gas (inert nitrogen in the air dilutes the heating value of the product). Gasification reactors are classified by type of reaction bed (fixed, entrained or fluidized), the operating pressure (pressurized or atmospheric), the method of ash removal (as molten slag or dry ash), and the number of stages in the gasifier (one or two). Within each class, gasifiers have similar emissions.

The raw gas from the gasifier contains varying concentrations of carbon monoxide, carbon dioxide, hydrogen, methane, other organics, hydrogen sulfide, miscellaneous acid gases, nitrogen (if air was used as the oxygen source), particulates and water. Four gas purification processes may be required to prepare the gas for combustion or further beneficiation: particulate removal, tar and oil removal, gas quenching and cooling, and acid gas removal. The primary function of the particulate removal process is the removal of coal dust, ash and tar aerosols in the raw product gas. During tar and oil removal and gas quenching and cooling, tars and oils are condensed, and other impurities such as ammonia are scrubbed from raw product gas using either aqueous or organic scrubbing liquors. Acid gases such as H_2S, COS, CS_2, mercaptans, and CO_2 can be removed from gas by an acid gas removal process. Acid gas removal processes generally absorb the acid gases in a solvent, from which they are subsequently stripped, forming a nearly pure acid gas waste stream with some hydrocarbon carryover. At this point, the raw gas is classified as either a low-Btu or medium-Btu gas.

To produce high-Btu gas, the heating value of the medium-Btu gas is raised by shift conversion and methanation. In the shift conversion process, H_2O and a portion of the CO are catalytically reacted to form CO_2 and H_2. After passing through an absorber for CO_2 removal, the remaining CO and H_2 in the product gas are reacted in a methanation reactor to yield CH_4 and H_2O.

There are also many auxiliary processes accompanying a coal gasification facility, which provide various support functions. Among the typical auxiliary processes are oxygen plant, power and steam plant, sulfur recovery unit, water treatment plant, and cooling towers.

8.21.1.2 Liquefaction - Liquefaction is a conversion process designed to produce synthetic organic liquids from coal. This conversion is achieved by reducing the level of impurities and increasing the hydrogen to carbon ratio of coal to the point that is becomes fluid. Currently, there are over 20 coal liquefaction processes in various stages of development by both industry and Federal agencies (1979). These processes can be grouped into four basic liquefaction techniques:

- Indirect liquefaction
- Pyrolysis
- Solvent extraction
- Catalytic liquefaction

Indirect liquefaction involves the gasification of coal followed by the catalytic conversion of the product gas to a liquid. Pyrolysis liquefaction involves heating coal to very high temperatures, thereby cracking the coal into liquid and gaseous products. Solvent extraction uses a solvent generated within the process to dissolve the coal and to transfer externally produced hydrogen to the coal molecules. Catalytic liquefaction resembles solvent extraction, except that hydrogen is added to the coal with the aid of a catalyst.

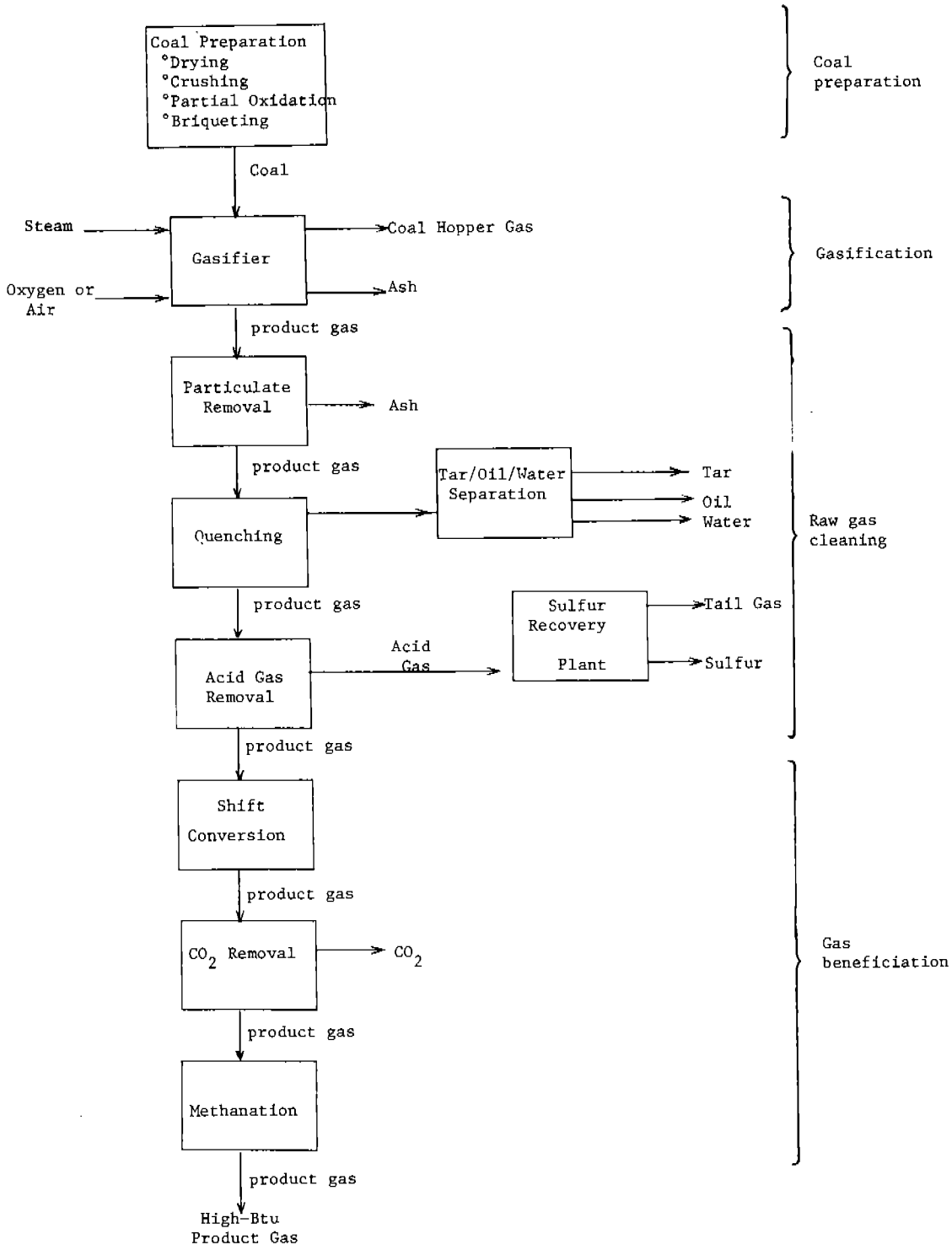

Figure 8.21-1. Flow diagram of typical coal gasification plant.

Figure 8.21-2 presents the flow diagram of a typical solvent extraction or catalytic liquefaction plant. These coal liquefaction processes consist of four basic operations: coal pretreatment, dissolution and liquefaction, product separation and purification, and residue gasification.

Coal pretreatment generally consists of coal pulverizing and drying. The dissolution of coal is best effected if the coal is dry and finely ground. The heater used to dry coal is typically coal fired, but it may also combust low-BTU value product streams or may use waste heat from other sources.

The dissolution and liquefaction operations are conducted in a series of pressure vessels. In these processes, the coal is mixed with hydrogen and recycled solvent, heated to high temperatures, dissolved and hydrogenated. The order in which these operations occur varies among the liquefaction processes and, in the case of catalytic liquefaction, involves contact with a catalyst. Pressures in these processes range up to 2000 psig (14,000 Pa), and temperatures range up to 900°F (480°C). During the dissolution and liquefaction process, the coal is hydrogenated to liquids and some gases, and the oxygen and sulfur in the coal are hydrogenated to H_2O and H_2S.

After hydrogenation, the liquefaction products are separated, through a series of flash separators, condensers, and distillation units, into a gaseous stream, various product liquids, recycle solvent, and mineral residue. The gases from the separation process are separated further by absorption into a product gas stream and a waste acid gas stream. The recycle solvent is returned to the dissolution/liquefaction process, and the mineral residue of char, undissolved coal and ash is used in a conventional gasification plant to produce hydrogen.

The residue gasification plant closely resembles a convential high-Btu coal gasifaction plant. The residue is gasified in the presence of oxygen and steam to produce CO, H_2, H_2O, other waste gases, and particulates. After treatment for removal of the waste gases and particulates, the CO and H_2O go into a shift reactor to produce CO_2 and additional H_2. The H_2 enriched product gas from the residue gasifier is used subsequently in the hydrogenation of the coal.

There are also many auxiliary processes accompanying a coal liquefaction facility which provide various support functions. Among the typical auxiliary processes are oxygen plant, power and steam plant, sulfur recovery unit, water treatment plant, cooling towers, and sour water strippers.

8.21.2 Emissions and Controls [1-3]

Although characterization data are availabe for some of the many developing coal conversion processes, describing these data in detail would require a more extensive discussion than possible here. So, this

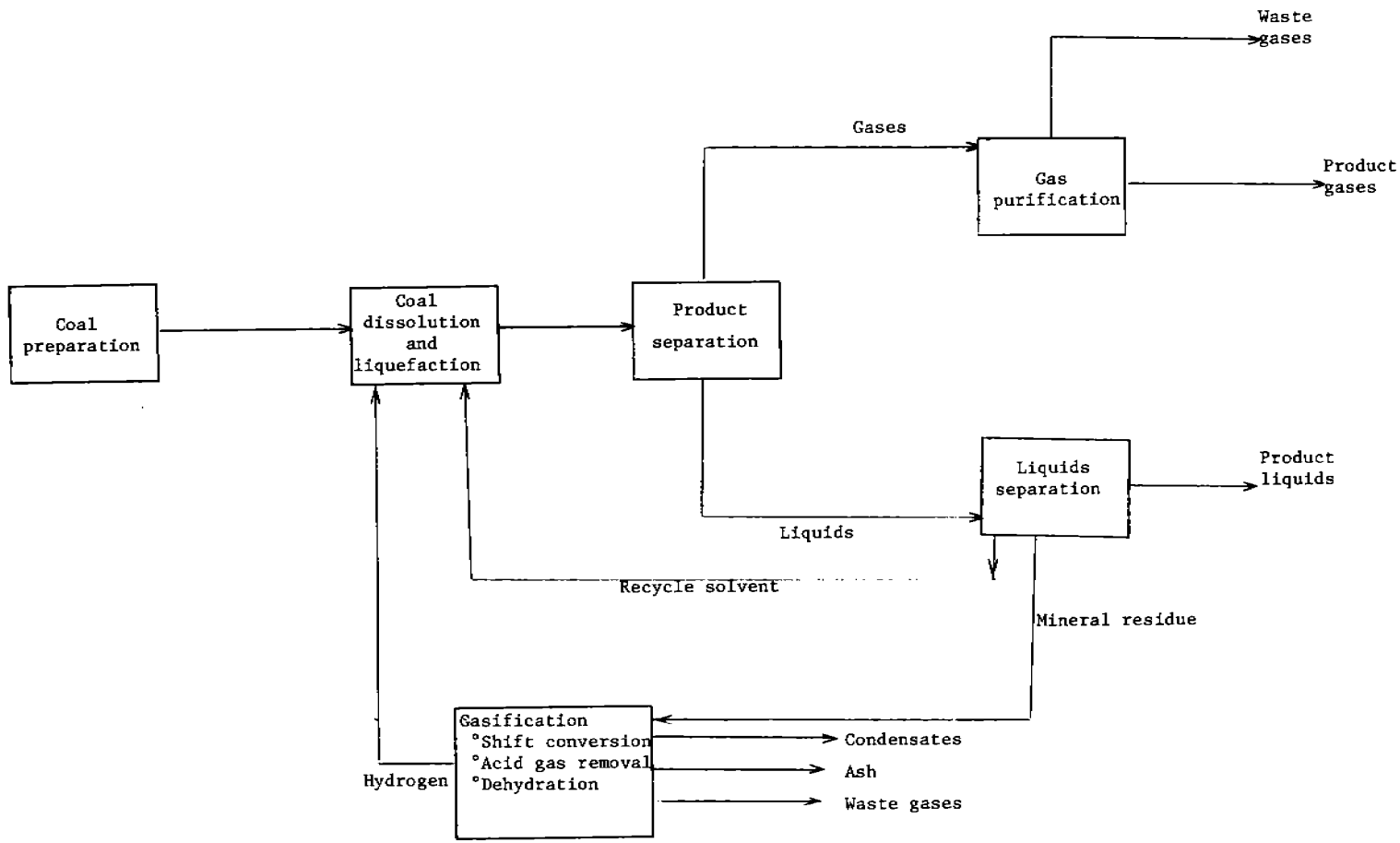

Figure 8.21-2. Flow diagram for an example coal liquefaction facility.

Table 8.21-1. SUMMARY OF EMISSIONS FROM COAL GASIFICATION PLANTS[1-3]

Operation/Emission Source/Stream	Characterization of Emission	Summary of Emission Control Choices
Coal Pretreatment		
Storage, handling and crushing/sizing - Dust emissions	Emissions from coal storage, handling and crushing/sizing mainly consist of coal dust. These emissions vary from site to site, depending on wind velocities, coal and pile size, and water content.	Water sprays and polymer coatings are used to control dust emissions from coal storage piles. Water sprays and enclosed equipment are vented to a baghouse to reduce or capture particulates from coal handling. Emissions from crushing/sizing are also usually vented to a baghouse or other particulate control device.
Drying, partial oxidation and briqueting - Vent gases	These emissions comprise coal dust and combustion gases along with a variety of organic compounds devolatilized from the coal. Organic species have not been determined.	In addition to particulate control devices, afterburners may be needed to destroy organic species.
Coal Gasification		
Feeding - Vent gases	These gases contain all the hazardous species found in the raw product gas exiting the gasifier, including H_2S, COS, CS_2, SO_2, CO, NH_3, CH_4, HCN, tars and oils, particulates, and trace organics and inorganics. The size and composition of this stream depend on the type of gasifier, e.g., fluidized	This stream could represent a sign ificant environmental problem. Control could include scrubbing or incineration (to capture or destroy the most hazardous species), or venting to the raw product gas or gasifier inlet air. The desired control depends on the type and size of gasification facility. Screw fed conveyors can be used instead of lock hoppers.

Table 8.21-1 (cont.). SUMMARY OF EMISSIONS FROM COAL GASIFICATION PLANTS[1-3]

Operation/Emission Source/Stream	Characterization of Emission	Summary of Emission Control Choices
	bed gasifiers emit substantially fewer tars and oils than fixed bed gasifiers.	
Ash removal - Vent gases	Emissions from ash removal and disposal depend on the type of gasifier. Ash dust will be released from all gasifiers that are not slagging or agglomerating ash units. If contaminated water is used for ash quenching, volatile organic and inorganic species may be released from the quench liquor.	These emissions have not been sufficiently characterized to recommend necessary controls. Particulate or organic emission controls could be needed. Clean water may be used for quenching to avoid the potential emission of hazardous volatile organic and inorganic species.
Startup - Vent gases	This vent gas initially resembles a coal combustion gas in composition. As the operating temperature of the gas increases, the startup gas begins to resemble the raw product gas.	A flare can incinerate the combustible constituents in the startup gas, but heavy tars and coal particulates will affect the performance of the flare. Potential problems with tars and particulates can be avoided by using charcoal or coke as the startup fuel.
Fugitives	These emissions have not been characterized, but they comprise hazardous species found in the raw product gas such as H_2S, COS, CS_2, CO, HCN, CH_4 and others.	Control methods mainly involve good maintenance and operating practices.

Table 8.21-1 (cont.). SUMMARY OF EMISSIONS FROM COAL GASIFICATION PLANTS[1-3]

Operation/Emission Source/Stream	Characterization of Emission	Summary of Emission Control Choices
Raw Gas Cleaning/Beneficiation		
Fugitives	These emissions have not been characterized, but they comprise hazardous species found in the various gas streams. Other emissions result from leaks from pump seals, valves, flanges and by-product storage tanks.	Control methods mainly involve good maintenance and operating practices.
Acid Gas Removal - Tail gases	The composition of this stream highly depends on the kind of acid gas removal employed. Processes featuring the direct removal and conversion of sulfur species in a single step (e.g., the Stretford process) produce tail gases containing small amounts of NH_3 and other species. Processes absorbing and subsequently desorbing a concentrated acid gas stream require a sulfur recovery process to avoid the emission of highly toxic gases having quantities of H_2S.	Some tail gas streams (from the Stretford process, for example) are probably not very hazardous. These streams have not been characterized, nor have control technology needs been demonstrated. Tail gases from other processes always require the removal of sulfur species. Trace constituents such as organics, trace elements and cyanides affect the performance of the auxiliary sulfur removal processes.
Auxiliary Operations		
Sulfur recovery	See Section 5.18	
Power and steam generation	See Section 1.1	

Table 8.21-1 (cont.). SUMMARY OF EMISSIONS FROM COAL GASIFICATION PLANTS[1-3]

Operation/Emission Source/Stream	Characterization of Emission	Summary of Emission Control Choices
Wastewater Treatment - Expansion gases	These streams comprise volatile organic and inorganic species that desorb from quenching/cooling liquor. The streams potentially include all the hazardous species found in the product gas.	These streams could pose significant environmental problems. Potential controls are generally similar to those needed to treat coal feeding vent gases.
Cooling Towers - Exhaust gas	Emissions from cooling towers are usually minor. However, if contaminated water is used as cooling water makeup, volatile organic and inorganic species from the contaminated water could be released.	The potential emission of hazardous volatile organic and inorganic species may be avoided by using clean water for cooling.

Section will cover emissions and controls for coal conversion processes on a qualitative level only.

8.21.2.1 Gasification - All of the major operations associated with low-, medium- and high-Btu gasification technology (coal pretreatment, gasification, raw gas cleaning, and gas beneficiation) can produce potentially hazardous air emissions. Auxiliary operations, such as sulfur recovery and combustion of fuel for electricity and steam generation, could account for a major portion of the emissions from a gasification plant. Discharges to the air from both major and auxiliary operations are summarized and discussed in Table 8.21-1.

Dust emissions from coal storage, handling and crushing/sizing can be controlled with available techniques. Controlling air emissions from coal drying, briqueting and partial oxidation processes is more difficult because of the volatile organics and possible trace metals liberated as the coal is heated.

The coal gasification process itself appears to be the most serious potential source of air emissions. The feeding of coal and the withdrawal of ash release emissions of coal or ash dust and organic and inorganic gases that are potentially toxic and carcinogenic. Because of their reduced production of tars and condensable organics, slagging gasifiers pose less severe emission problems at the coal inlet and ash outlet.

Gasifiers and associated equipment also will be sources of potentially hazardous fugitive leaks. These leaks may be more severe from pressurized gasifiers and/or gasifiers operating at high temperatures.

Raw gas cleaning and gas beneficiation operations appear to be smaller sources of potential air emissions. Fugitive emissions have not been characterized but are potentially large. Emissions from the acid gas removal process depend on the kind of removal process employed at a plant. Processes used for acid gas removal may remove both sulfur compounds and carbon dioxide or may be operated selectively to remove only the sulfur compounds. Typically, the acid gases are stripped from the solvent and processed in a sulfur plant. Some processes, however, directly convert the absorbed hydrogen sulfide to elemental sulfur. Emissions from these direct conversion processes (e.g., the Stretford process) have not been characterized but are probably minor, consisting of CO_2, air, moisture and small amounts of NH_3.

Emission controls for two auxiliary processes (power and steam generation and sulfur recovery) are discussed elsewhere in this document (Sections 1.1 and 5.18, respectively). Gases stripped or desorbed from process wastewaters are potentially hazardous, since they contain many of the components found in the product gas. These include sulfur and nitrogen species, organics, and other species that are toxic and potentially carcinogenic. Possible controls for these gases include incineration, byproduct recovery, or venting to the raw product gas or inlet

Table 8.21-2. SUMMARY OF EMISSIONS FROM COAL LIQUEFACTION FACILITY[1]

Operation/Emission Source/Stream	Characterization of Emission	Summary of Emission Control Choices
Coal Preparation		
Storage, handling and crushing/sizing	Emissions primarily consist of fugitive coal dust generated at transfer points and points exposed to wind erosion. A potentially significant source.	Water sprays and polymer coatings are used to control dust from storage sites. Water sprays and enclosures vented to baghouses are effective on crushing and sizing operations.
Drying	Emissions include coal dust, combustion products from heater, and organics volatilized from the coal. A potentially significant particulate source.	Scrubbers, electrostatic precipitators, and baghouses are effective coal dust controls. Low drying temperatures reduce organics formation.
Coal Dissolution and Liquefaction		
Process heater (fired with low grade fuel gas)	Emissions consist of combustion products (particulates, CO, SO_2, NO_x and HC).	Fuel desulfurization for SO_2 control and combustion modifications for reduced CO, HC and NO_x.
Slurry mix tank	Evolution of dissolved gases from recycle solvent (HC, acid gases, organics) due to low pressure (atmospheric) of tank. Some pollutants are toxic even in small quantities.	Controls might include scrubbing, incineration or venting to heater combustion air supply.
Product Separation and Liquefaction - Sulfur recovery plant	Tail gases containing acids (H_2S, SO_2, COS, CS_2 NH_3 and particulate sulfur).	Venting to tail gas treatment plant, or operating sulfur recovery plant at higher efficiency.

Table 8.21-2 (cont.). SUMMARY OF EMISSIONS FROM COAL LIQUEFACTION FACILITY[1]

Operation/Emission Source/Stream	Characterization of Emission	Summary of Emission Control Choices
Residue Gasification	See 8.21.2.1, in text.	
Auxiliary Processes		
Power and steam generation	See Section 1.1.	
Wastewater system	Volatile organics, acid gases, ammonia and cyanides, which evolve from various waste water collection and treating systems.	Enclosure of the waste water system and venting gases from system to scrubbers or incinerators.
Cooling towers	Any chemical in the facility can leak to cooling water system from leaking heat exchangers and can be stripped to the atmosphere in the cooling tower.	Good heat exchanger maintenance and surveillance of cooling water quality.
Fugitives	All organic and gaseous compounds in plant can leak from valves, flanges, seals and sample ports. This may be the largest source of hazardous organics.	Good housekeeping, frequent maintenance and selection of durable components are major control techniques.

air. Cooling towers are usually minor emission sources, unless the cooling water is contaminated.

8.21.2.2 Liquefaction - The potential exists for generation of significant levels of atmospheric pollutants from every major operation in a coal liquefaction facility. These pollutants include coal dust, combustion products, fugitive organics and fugitive gases. The fugitive organics and gases could include carcinogenic polynuclear organics and toxic gases such as metal carbonyls, hydrogen sulfides, ammonia, sulfurous gases, and cyanides. Many studies are currently underway to characterize these emissions and to establish effective control methods. Table 8.21-2 presents information now available on liquefaction emissions.

Emissions from coal preparation include coal dust from the many handling operations and combustion products from the drying operation. The most significant pollutant from these operations is the coal dust from crushing, screening and drying activities. Wetting down the surface of the coal, enclosing the operations, and venting effluents to a scrubber or fabric filter are effective means of particulate control.

A major source of emissions from the coal dissolution and liquefaction operation is the atmospheric vent on the slurry mix tank. The slurry mix tank is used for mixing feed coal and recycle solvent. Gases dissolved in the recycle solvent stream under pressure will flash from the solvent as it enters the unpressurized slurry mix tank. These gases can contain hazardous volatile organics and acid gases. Control techniques proposed for this source include scrubbing, incineration or venting to the combustion air supply for either a power plant or a process heater.

Emissions from process heaters fired with waste process gas or waste liquids will consist of standard combustion products. Industrial combustion emission sources and available controls are discussed in Section 1.1.

The major emission source in the product separation and purification operations is the sulfur recovery plant tail gas. This can contain significant levels of acid or sulfurous gases. Emission factors and control techniques for sulfur recovery tail gases are discussed in Section 5.18.

Emissions from the residue gasifier used to supply hydrogen to the system are very similar to those for coal gasifiers previously discussed in this Section.

Emissions from auxiliary processes include combustion products from onsite steam/electric power plant and volatile emissions from the wastewater system, cooling towers and fugitive emission sources. Volatile emissions from cooling towers, wastewater systems and fugitive emission sources possibly can include every chemical compound present in the plant. These sources will be the most significant and most difficult

to control in a coal liquefaction facility. Compounds which can be present include hazardous organics, metal carbonyls, trace elements such as mercury, and toxic gases such as CO, H_2S, HCN, NH_3, COS and CS_2.

Emission controls for wastewater systems involve minimizing the contamination of water with hazardous compounds, enclosing the waste water systems, and venting the wastewater systems to a scrubbing or incineration system. Cooling tower controls focus on good heat exchanger maintenance, to prevent chemical leaks into the system, and on surveillance of cooling water quality. Fugitive emissions from various valves, seals, flanges and sampling ports are individually small but collectively very significant. Diligent housekeeping and frequent maintenance, combined with a monitoring program, are the best controls for fugitive sources. The selection of durable low leakage components, such as double mechanical seals, is also effective.

References for Section 8.21

1. C. E. Burklin and W. J. Moltz, Energy Resource Development System, EPA Contract No. 68-01-1916, Radian Corporation and The University of Oklahoma, Austin, TX, September 1978.

2. E. C. Cavanaugh, et al., Environmental Assessment Data Base for Low/Medium-BTU Gasification Technology, Volume 1, EPA-600/7-77-125a, U. S. Environmental Protection Agency, Research Triangle Park, NC, November 1977.

3. P. W. Spaite and G. C. Page, Technology Overview: Low- and Medium-BTU Coal Gasification Systems, EPA-600/7-78-061, U.S. Environmental Protection Agency, Research Triangle Park, NC, March 1978.

8.22 TACONITE ORE PROCESSING

8.22.1 General[1-2]

More than two thirds of the iron ore produced in the United States for making iron consists of taconite concentrate pellets. Taconite is a low grade iron ore, largely from deposits in Minnesota and Michigan, but from other areas as well. Processing of taconite consists of crushing and grinding the ore to liberate ironbearing particles, concentrating the ore by separating the particles from the waste material (gangue), and pelletizing the iron ore concentrate. A simplified flow diagram of these processing steps is shown in Figure 8.22-1.

Liberation - The first step in processing crude taconite ore is crushing and grinding. The ore must be ground to a particle size sufficiently close to the grain size of the ironbearing mineral, to allow for a high degree of mineral liberation. Most of the taconite used today requires very fine grinding. The grinding is normally performed in three or four stages of dry crushing, followed by wet grinding in rod mills and ball mills. Gyratory crushers are generally used for primary crushing, and cone crushers are used for secondary and tertiary fine crushing. Intermediate vibrating screens remove undersize material from the feed to the next crusher and allow for closed circuit operation of the fine crushers. The rod and ball mills are also in closed circuit with classification systems such as cyclones. An alternative is to feed some coarse ores directly to wet or dry semiautogenous or autogenous grinding mills, then to pebble or ball mills. Ideally, the liberated particles of iron minerals and barren gangue should be removed from the grinding circuits as soon as they are formed, with larger particles returned for further grinding.

Concentration - As the iron ore minerals are liberated by the crushing steps, the ironbearing particles must be concentrated. Since only about 33 percent of the crude taconite becomes a shippable product for iron making, a large amount of gangue is generated. Magnetic separation and flotation are most commonly used for concentration of the taconite ore.

Crude ores in which most of the recoverable iron is magnetite (or, in rare cases, maghemite) are normally concentrated by magnetic separation. The crude ore may contain 30 to 35 percent total iron by assay, but theoretically only about 75 percent of this is recoverable magnetite. The remaining iron becomes part of the gangue.

Nonmagnetic taconite ores are concentrated by froth flotation or by a combination of selective flocculation and flotation. The method is determined by the differences in surface activity between the iron and gangue particles. Sharp separation is often difficult.

Various combinations of magnetic separation and flotation may be used to concentrate ores containing various iron minerals (magnetite and hematite, or maghemite) or wide ranges of mineral grain sizes. Flotation is also often used as a final polishing operation on magnetic concentrates.

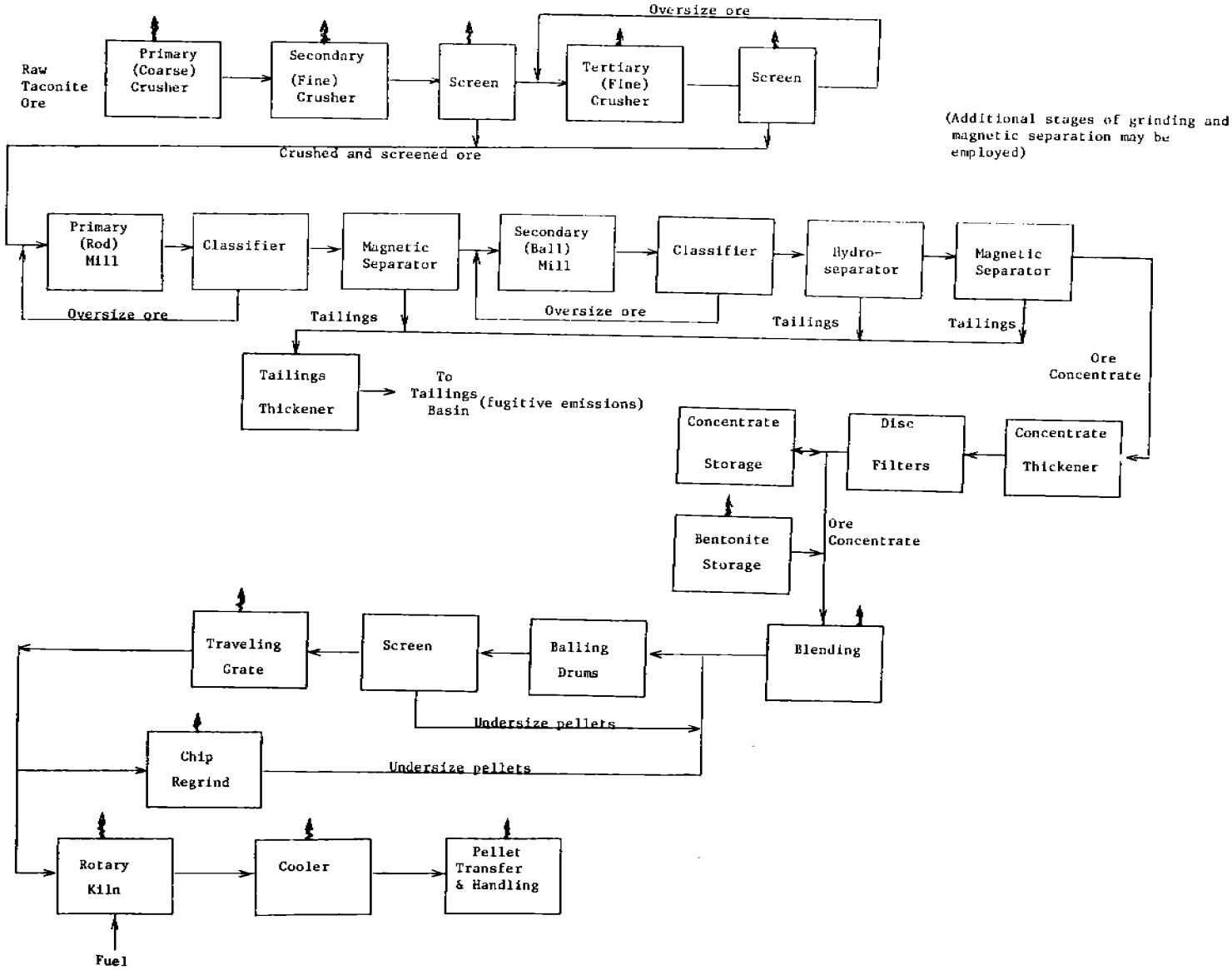

Figure 8.22-1. Taconite ore processing plant. (Process emissions are indicated by ↑.)

Pelletization - Iron ore concentrates must be coarser than about No. 10 mesh to be acceptable as blast furnace feed without further treatment. The finer concentrates are agglomerated into small "green" pellets. This is normally accomplished by tumbling moistened concentrate with a balling drum or balling disc. A binder additive, usually powdered bentonite, may be added to the concentrate to improve ball formation and the physical qualities of the "green" balls. The bentonite is lightly mixed with the carefully moistened feed at 4.5 to 9 kilograms per megagram (10 to 20 lb/ton).

The pellets are hardened by a procedure called induration, the drying and heating of the green balls in an oxidizing atmosphere at incipient fusion temperature [1290 to 1400°C (2350 to 2550°F), depending on the composition of the balls] for several minutes and then cooling. Four general types of indurating apparatus are currently used. These are the vertical shaft furnace, the straight grate, the circular grate and grate/kiln. Most of the large plants and new plants use the grate/kiln. Natural gas is most commonly used for pellet induration now, but probably not in the future. Heavy oil is being used at a few plants, and coal may be used at future plants.

In the vertical shaft furnace, the wet green balls are distributed evenly over the top of the slowly descending bed of pellets. A rising stream of gas of controlled temperature and composition flows counter to the descending bed of pellets. Auxiliary fuel combustion chambers supply hot gases midway between the top and bottom of the furnace. In the straight grate apparatus, a continuous bed of agglomerated green pellets is carried through various up and down flows of gases at different temperatures. The grate/kiln apparatus consists of a continuous traveling grate followed by a rotary kiln. Pellets indurated by the straight grate apparatus are cooled on an extension of the grate or in a separate cooler. The grate/kiln product must be cooled in a separate cooler, usually an annular cooler with countercurrent airflow.

8.22.2 Emissions and Controls[1-3]

Emission sources in taconite ore processing plants are indicated in Figure 8.22-1. Particulate emissions also arise from ore mining operations. Uncontrolled emission factors for the major processing sources are presented in Table 8.22-1, and control efficiencies in Table 8.22-2.

The taconite ore is handled dry through the crushing stages. All crushers, size classification screens and conveyor transfer points are major points of particulate emissions. Crushed ore is normally ground in wet rod and ball mills. A few plants, however, use dry autogenous or semi-autogenous grinding and have higher emissions than do conventional plants. The ore remains wet through the rest of the beneficiation process, so particulate emissions after crushing are generally insignificant.

The first source of emissions in the pelletizing process is the transfer and blending of bentonite. There are no other significant emissions in the balling section, since the iron ore concentrate is normally too wet to cause appreciable dusting. Additional emission points in the pelletizing process include the main waste gas stream from the indurating furnace,

TABLE 8.22-1. UNCONTROLLED PARTICULATE EMISSION FACTORS FOR TACONITE ORE PROCESSING[a]

EMISSION FACTOR RATING: D

Source	Emissions[b]	
	kg/Mg	lb/ton
Fine crushing	39.9	79.8
Waste gas	14.6	29.2
Pellet handling	1.7	3.4
Grate discharge	0.66	1.32
Grate feed	0.32	0.64
Bentonite blending	0.11	0.22
Coarse crushing	0.10	0.20
Ore transfer	0.05	0.10
Bentonite transfer	0.02	0.04

[a] Reference 1. Median values.
[b] Expressed as units per unit weight of pellets produced.

pellet handling, furnace transfer points (grate feed and discharge), and for plants using the grate/kiln furnace, annular coolers. In addition, tailings basins and unpaved roadways can be sources of fugitive emissions.

Fuel used to fire the indurating furnace generates low levels of sulfur dioxide emissions. For a natural gas fired furnace, these emissions are about 0.03 kilograms of SO_2 per megagram of pellets produced (0.06 lb/ton). Higher SO_2 emissions (about 0.6 to 0.7 kg/Mg, or 0.12 to 0.14 lb/ton) would result from an oil or coal fired furnace.

Particulate emissions from taconite ore processing plants are controlled by a variety of devices, including cyclones, multiclones, rotoclones, scrubbers, baghouses and electrostatic precipitators. Water sprays are also used to suppress dusting. Annular coolers are generally left uncontrolled, because their mass loadings of particulates are small, typically less than 0.11 grams per cubic meter (0.05 g/scf).

The largest source of particulate emissions in taconite ore mines is traffic on unpaved haul roads.[3] Table 8.22-3 presents size specific emission factors for this source determined through source testing at one taconite mine. Other significant particulate emission sources at taconite mines are wind erosion and blasting.[3]

As an alternative to the single valued emission factors for open dust sources given in Tables 8.22-1 and 8.22-3, empirically derived emission

TABLE 8.22-2. CONTROL EFFICIENCIES FOR COMBINATIONS OF CONTROL DEVICES AND SOURCES[a]

Control	Coarse crushing	Ore transfer	Fine crushing	Bentonite transfer	Bentonite blending	Grate feed	Grate discharge	Waste gas	Pellet handling
Scrubber	95(10)f 91.6(4)f 99(2)m	99.5(18)f 99(5)f 97(4)m 99(1)m	99.5(5)f 99.6(6)f 97(10)m 97(19)e	98(1)f	98.7(1)f 99.3(1)f	98.7(2)f 98(1)m 99(5)e	99.3(2)f 99(5)e 98(1)e	98.5(1)e 89(1)e	99.3(2)f 99.7(1)f 99(2)f 97.5(1)e
Cyclone	85(1)f	95(2)e						95-98(56)f	
Multiclone	92(2)f 88(2)f							95-98(2)f	
Rotoclone	91.6(4)f	98(1)f	99.7(7)f 98.3(4)f						98(1)e
Bag collector	99(2)m 99.9(2)m 99(4)e 99.9(2)e			99(8)e	99(2)f 99.7(1)f				
Electrostatic precipitator								98.9(2)f 98.8(1)e	
Dry mechanical collector	85(1)f	85(1)f							
Centrifugal collector						88(1)f 98(1)e 99.4(1)e	88(1)f 99.4(1)e		

[a] Reference 1. Control efficiencies are expressed as percent reduction. Numbers in parentheses are the number of indicated combinations with the stated efficiency. The letters m, f, e denote whether the stated efficiencies were based upon manufacturer's rating (m), field testing (f), or estimations (e). Blanks indicate that no such combinations of source and control technology are known to exist, or that no data on the efficiency of the combination are available.

TABLE 8.22-3. UNCONTROLLED PARTICULATE EMISSION FACTORS FOR HEAVY DUTY VEHICLE TRAFFIC ON HAUL ROADS AT TACONITE MINES[a]

Surface material	Emission factor by aerodynamic diameter					Units	Emission Factor Rating
	< 30 μm	< 15 μm	< 10 μm	< 5 μm	< 2.5 μm		
Crushed rock and glacial till	3.1	2.2	1.7	1.1	0.62	kg/VKT	C
	11.0	7.9	6.2	3.9	2.2	lb/VMT	C
Crushed taconite and waste	2.6	1.9	1.5	0.90	0.54	kg/VKT	D
	9.3	6.6	5.2	3.2	1.9	lb/VMT	D

[a] Reference 3. Predictive emission factor equations, which generally provide more accurate estimates of emissions, are presented in Chapter 11. VKT = Vehicle kilometers traveled. VMT = Vehicle miles traveled.

factor equations are presented in Chapter 11 of this document. Each equation was developed for a source operation defined on the basis of a single dust generating mechanism which crosses industry lines, such as vehicle traffic on unpaved roads. The predictive equation explains much of the observed variance in measured emission factors by relating emissions to parameters which characterize source conditions. These parameters may be grouped into three categories: 1) measures of source activity or energy expended (e.g., the speed and weight of a vehicle traveling on an unpaved road), 2) properties of the material being disturbed (e.g., the content of suspendable fines in the surface material on an unpaved road), 3) climatic parameters (e.g., number of precipitation free days per year, when emissions tend to a maximum).

Because the predictive equations allow for emission factor adjustment to specific source conditions, the equations should be used in place of the single valued factors for open dust sources, in Tables 8.22-1 and 8.22-3, if emission estimates for sources in a specific taconite ore mine or processing facility are needed. However, the generally higher quality ratings assigned to the equations are applicable only if 1) reliable values of correction parameters have been determined for the specific sources of interest and 2) the correction parameter values lie within the ranges tested in developing the equations. Chapter 11 lists measured properties of aggregate process materials and road surface materials found in taconite mining and processing facilities, which can be used to estimate correction parameter values for the predictive emission factor equations, in the event that site specific values are not available. Use of mean correction parameter values from Chapter 11 reduces the quality ratings of the emission factor equations by one level.

References for Section 8.22

1. J. P. Pilney and G. V. Jorgensen, Emissions from Iron Ore Mining, Beneficiation and Pelletization, Volume 1, EPA Contract No. 68-02-2113, Midwest Research Institute, Minnetonka, MN, June 1978.

2. A. K. Reed, Standard Support and Environmental Impact Statement for the Iron Ore Beneficiation Industry (Draft), EPA Contract No. 68-02-1323, Battelle Columbus Laboratories, Columbus, OH, December 1976.

3. T. A. Cuscino, et al., Taconite Mining Fugitive Emissions Study, Minnesota Pollution Control Agency, Roseville, MN, June 1979.

8.23 METALLIC MINERALS PROCESSING

8.23.1 Process Description[1-6]

Metallic mineral processing typically involves the mining of ore, either from open pit or underground mines; the crushing and grinding of ore; the separation of valuable minerals from matrix rock through various concentration steps; and at some operations, the drying, calcining or pelletizing of concentrates to ease further handling and refining. Figure 8.23-1 is a general flow diagram for metallic mineral processing. Very few metallic mineral processing facilities will contain all of the operations depicted in this Figure, but all facilities will use at least some of these operations in the process of separating valued minerals from the matrix rock.

The number of crushing steps necessary to reduce ore to the proper size will vary with the type of ore. Hard ores, including some copper, gold, iron and molybdenum ores, may require as much as a tertiary crushing. Softer ores, such as some uranium, bauxite and titanium/zirconium ores, require little or no crushing. Final comminution of both hard and soft ores is often accomplished by grinding operations using media such as balls or rods of various materials. Grinding is most often performed with an ore/water slurry, which reduces particulate emissions to negligible levels. When dry grinding processes are used, particulate emissions can be considerable.

After final size reduction, the beneficiation of the ore increases the concentration of valuable minerals by separating them from the matrix rock. A variety of physical and chemical processes is used to concentrate the mineral. Most often, physical or chemical separation is performed in an aqueous environment which eliminates particulate emissions, although some ferrous and titaniferous minerals are separated by magnetic or electrostatic methods in a dry environment.

The concentrated mineral products may be dried to remove surface moisture. Drying is most frequently done in natural gas fired rotary dryers. Calcining or pelletizing of some products, such as alumina or iron concentrates, are also performed. Emissions from calcining and pelletizing operations are not covered in this Section.

8.23.2 Process Emissions[7-9]

Particulate emissions result from metallic mineral plant operations such as crushing and dry grinding of ore; drying of concentrates; storing and reclaiming of ores and concentrates from storage bins; transfer of materials; and loading of final products for shipment. Particulate emission factors are provided in Table 8.23-1 for various metallic mineral process operations, including primary, secondary and tertiary crushing; dry grinding; drying; and material handling and transfer. Fugitive emissions are also possible from roads and open stockpiles, factors for which are in Section 11.2.

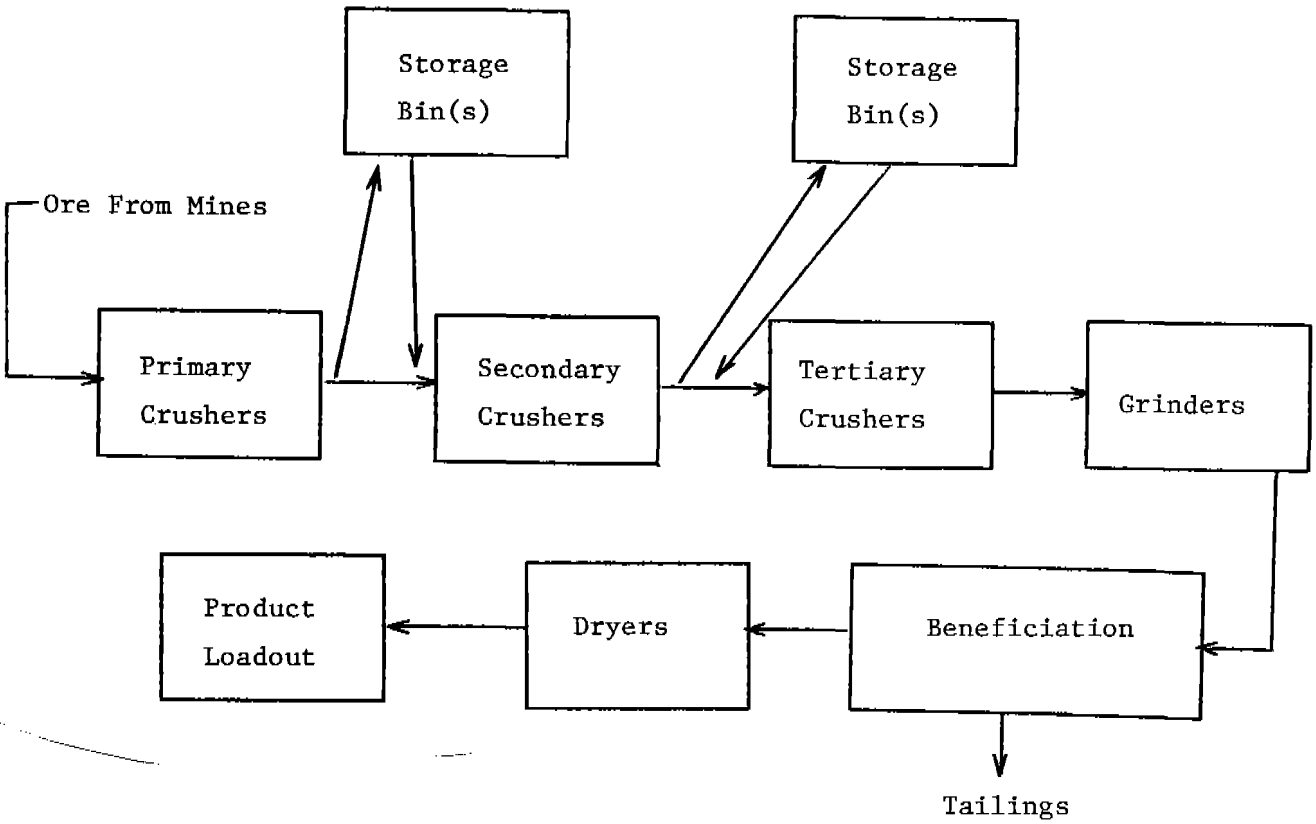

Figure 8.23-1. A metallic mineral processing plant.

The emission factors in Table 8.23-1 are for the process operations as a whole. At most metallic mineral processing plants, each process operation will require several types of equipment. A single crushing operation likely will include a hopper or ore dump, screen(s), crusher, surge bin, apron feeder, and conveyor belt transfer points. Emissions from these various pieces of equipment are often ducted to a single control device. The emission factors provided in Table 8.23-1 for primary, secondary and tertiary crushing operations are for process units that are typical arrangements of the above equipment.

Emission factors are provided in Table 8.23-1 for two types of dry grinding operations, those grinding operations that involve air conveying and/or air classification of material and those that involve screening of material without air conveying. Grinding operations that involve air conveying and air classification usually require dry cyclones for efficient product recovery. The factors in Table 8.23-1 are for emissions after product recovery cyclones. Grinders in closed circuit with screens usually do not require cyclones. Emission factors are not provided for wet grinders, because the high moisture content in these operations can reduce emissions to negligible levels.

The emission factors for dryers in Table 8.23-1 include transfer points integral with the drying operation. A separate emission factor is provided for dryers at titanium/zirconium plants that use dry cyclones for product recovery and for emission control. Titanium/zirconium sand type ores do not require crushing or grinding, and the ore is washed to remove humic and clay material before concentration and drying operations.

At some metallic mineral processing plants, material is stored in enclosed bins between process operations. The emission factors provided in Table 8.23-1 for the handling and transfer of material should be applied to the loading of material into storage bins and the transferring of material from the bin. The emission factor will usually be applied twice to a storage operation, once for the loading operation and once for the reclaiming operation. If material is stored at multiple points in the plant, the emission factor should be applied to each operation and should apply to the material being stored at each bin. The material handling and transfer factors do not apply to small hoppers, surge bins or transfer points that are integral with crushing, drying or grinding operations.

At some large metallic mineral processing plants, extensive material transfer operations, with numerous conveyor belt transfer points, may be required. The emission factors for material handling and transfer should be applied to each transfer point that is not an integral part of another process unit. These emission factors should be applied to each such conveyor transfer point and should be based on the amount of material transferred through that point.

The emission factors for material handling can also be applied to final product loading for shipment. Again, these factors should be applied to each transfer point, ore dump or other point where material is allowed to fall freely.

Test data collected in the mineral processing industries indicate that the moisture content of ore can have a significant effect on emissions from several process operations. High moisture generally reduces the uncontrolled emission rates, and separate emission rates are provided for primary crushers, secondary crushers, tertiary crushers, and material handling and transfer operations that process high moisture ore. Drying and dry grinding operations are assumed to produce or to involve only low moisture material.

For most metallic minerals covered in this Section, high moisture ore is defined as ore whose moisture content, as measured at the primary crusher inlet or at the mine, is 4 weight percent or greater. Ore defined as high moisture at the primary crusher is presumed to be high moisture ore at any subsequent operation for which high moisture factors are provided, unless a drying operation precedes the operation under consideration. Ore is defined as low moisture when a dryer precedes the operation under consideration or when the ore moisture at the mine or primary crusher is less than 4 weight percent.

Separate factors are provided for bauxite handling operations, in that some types of bauxite with a moisture content as high as 15 to 18 weight percent can still produce relatively high emissions during material handling

TABLE 8.23-1. UNCONTROLLED PARTICULATE EMISSION FACTORS FOR METALLIC MINERAL PROCESSES[a]

Process	Low moisture ore[b]		High moisture ore[b]		Emission Factor Rating
	Emissions kg/Mg (lb/ton)	Particulate emissions < 10 μm kg/Mg (lb/ton)	Emissions kg/Mg (lb/ton)	Particulate emissions < 10 μm kg/Mg (lb/ton)	
Crushing[c]					
Primary	0.2 (0.5)	0.02 (0.05)	0.01 (0.02)	0.004 (0.009)	C
Secondary	0.6 (1.2)	NA	0.03 (0.05)	0.012 (0.02)	D
Tertiary	1.4 (2.7)	0.08 (0.16)	0.03 (0.06)	0.001 (0.02)	E
Wet grinding	Negligible	-	Negligible	-	
Dry grinding[d]					
With air conveying and/or air classification	14.4 (28.8)	13.0 (26.0)	d	d	C
Without air conveying or air classification	1.2 (2.4)	0.16 (0.31)	d	d	D
Drying[e]					
All minerals but titanium/zirconium sands	9.8 (19.7)	5.9 (12.0)	e	e	C
Titanium/zirconium with cyclones	0.3 (0.5)	NA	e	e	C
Material handling and transfer[f]					
All minerals but bauxite	0.06 (0.12)	0.03 (0.06)	0.005 (0.01)	0.002 (0.006)	C
Bauxite/alumina	0.6 (1.1)	NA	NA	NA	C

[a]References 9-12. Controlled particulate emission factors are discussed in Section 8.23.3. NA = not available.
[b]Defined in Section 8.23.2.
[c]Based on weight of material entering primary crusher.
[d]Based on weight of material entering grinder. Factors are the same for both high moisture and low moisture ores, because material is usually dried before entering grinder.
[e]Based on weight of material exiting dryer. Factors are the same for both high moisture and low moisture ores. SO_x emissions are fuel dependent (see Chapter 1). NO_x emissions depend on burner design, combustion temperature, etc. (see Chapter 1).
[f]Based on weight of material transferred. Applies to each loading or unloading operation and to each conveyor belt transfer point.
[g]Bauxite with moisture content as high as 15 - 18% can exhibit the emission characteristics of low moisture ore. Use low moisture factor for bauxite unless material exhibits obvious sticky, nondusting characteristics.

procedures. These emissions could be eliminated by adding sufficient moisture to the ore, but bauxite then becomes so sticky that it is difficult to handle. Thus, there is some advantage to keeping bauxite in a relatively dusty state, and the low moisture emission factors given represent conditions fairly typical of the industry.

Particulate matter size distribution data for some process operations have been obtained for control device inlet streams. Since these inlet streams contain particulate matter from several activities, a variability has been anticipated in the calculated size specific emission factors for particulates.

Emission factors for particulate matter equal to or less than 10μm aerodynamic diameter, from a limited number of tests performed to characterize the processes, are presented in Table 8.23-1.

In some plants, particulate emissions from multiple pieces of equipment and operations are collected and ducted to a control device. Therefore, examination of reference documents is recommended before application of the factors to specific plants.

Emission factors for particulate matter equal to or less than 10μm from high moisture primary crushing operations and material handling and transfer operations were based on test results usually in the 30 to 40 weight percent range. However, high values were obtained for high moisture ore at both the primary crushing and the material handling and transfer operations, and these were included in the average values in the Table. A similarly wide range occurred in the low moisture drying operation.

Several other factors are generally assumed to affect the level of emissions from a particular process operation. These include ore characteristics such as hardness, crystal and grain structure, and friability. Equipment design characteristics, such as crusher type, could also affect the emissions level. At this time, data are not sufficient to quantify each of these variables.

8.23.3 Controlled Emissions[7-9]

Emissions from metallic mineral processing plants are usually controlled with wet scrubbers or baghouses. For moderate to heavy uncontrolled emission rates from typical dry ore operations, dryers and dry grinders, a wet scrubber with pressure drop of 1.5 to 2.5 kilopascals (6 to 10 inches of water) will reduce emissions by approximately 95 percent. With very low uncontrolled emission rates typical of high moisture conditions, the percentage reduction will be lower (approximately 70 percent).

Over a wide range of inlet mass loadings, a well designed and maintained baghouse will reduce emissions to a relatively constant outlet concentration. Such baghouses tested in the mineral processing industry consistently reduce emissions to less than 0.05 grams per dry standard cubic meter (0.02 grains per dry standard cubic foot), with an average concentration of 0.015 g/dscm (0.006 gr/dscf). Under conditions of moderate to high uncontrolled emission rates of typical dry ore facilities, this level of

controlled emissions represents greater than 99 percent removal of particulate emissions. Because baghouses reduce emissions to a relatively constant outlet concentration, percentage emission reductions would be less for baghouses on facilities with a low level of uncontrolled emissions.

References for Section 8.23

1. D. Kram, "Modern Mineral Processing: Drying, Calcining and Agglomeration", Engineering and Mining Journal, 181(6):134-151, June 1980.

2. A. Lynch, Mineral Crushing and Grinding Circuits, Elsevier Scientific Publishing Company, New York, 1977.

3. "Modern Mineral Processing: Grinding", Engineering and Mining Journal, 181(161):106-113, June 1980.

4. L. Mollick, "Modern Mineral Processing: Crushing", Engineering and Mining Journal, 181(6):96-103, June 1980.

5. R. H. Perry, et al., Chemical Engineer's Handbook, 4th Ed, McGraw-Hill, New York, 1963.

6. R. Richards and C. Locke, Textbook of Ore Dressing, McGraw-Hill, New York, 1940.

7. "Modern Mineral Processing: Air and Water Pollution Controls", Engineering and Mining Journal, 181(6):156-171, June 1980.

8. W. E. Horst and R. C. Enochs, "Modern Mineral Processing: Instrumentation and Process Control", Engineering and Mining Journal, 181(6):70-92, June 1980.

9. Metallic Mineral Processing Plants - Background Information for Proposed Standards (Draft). EPA Contract No. 68-02-3063, TRW, Research Triangle Park, NC, 1981.

10. Telephone communication between E. C. Monnig, TRW Environmental Division, and R. Beale, Associated Minerals, Inc., May 17, 1982.

11. Written communication from W. R. Chalker, DuPont, Inc., to S. T. Cuffe, U. S. Environmental Protection Agency, Research Triangle Park, NC, December 21, 1981.

12. Written communication from P. H. Fournet, Kaiser Aluminum and Chemical Corporation, to S. T. Cuffe, U. S. Environmental Protection Agency, Research Triangle Park, NC, March 5, 1982.

8.24 WESTERN SURFACE COAL MINING

8.24.1 General[1]

There are 12 major coal fields in the western states (excluding the Pacific Coast and Alaskan fields), as shown in Figure 8.24-1. Together, they account for more than 64 percent of the surface minable coal reserves

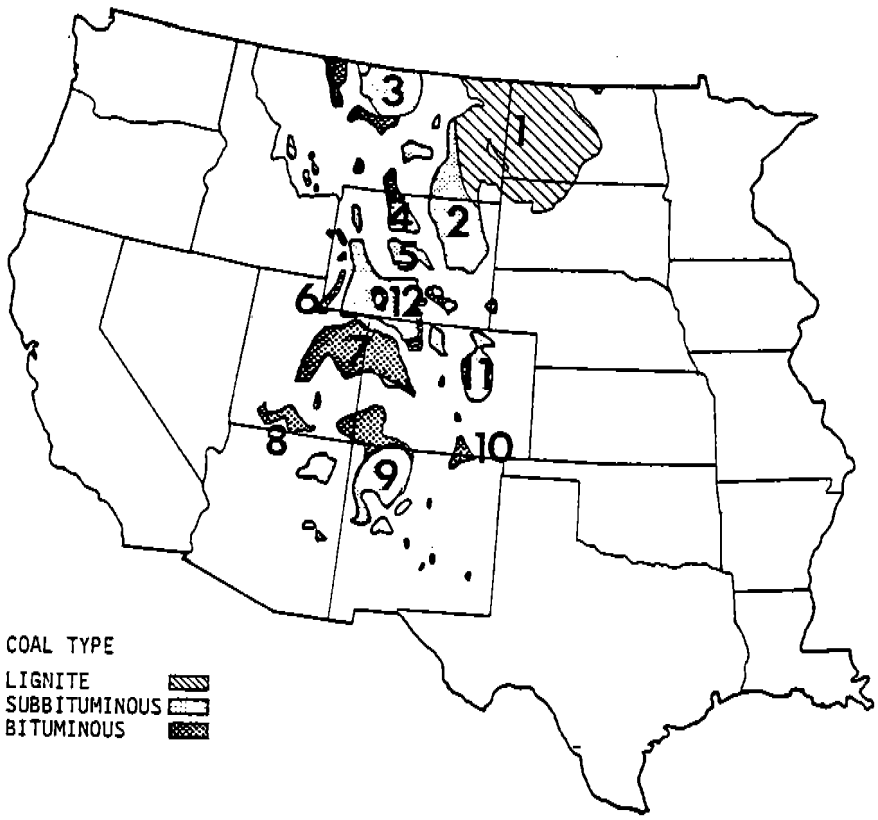

	Coal field	Strippable reserves (10^6 tons)
1	Fort Union	23,529
2	Powder River	56,727
3	North Central	All underground
4	Bighorn Basin	All underground
5	Wind River	3
6	Hams Fork	1,000
7	Uinta	308
8	Southwestern Utah	224
9	San Juan River	2,318
10	Raton Mesa	All underground
11	Denver	All underground
12	Green River	2,120

Figure 8.24-1. Coal fields of the western U.S.[3]

in the United States.[2] The 12 coal fields have varying characteristics which may influence fugitive dust emission rates from mining operations, including overburden and coal seam thicknesses and structure, mining equipment, operating procedures, terrain, vegetation, precipitation and surface moisture, wind speeds and temperatures. The operations at a typical western surface mine are shown in Figure 8.24-2. All operations that involve movement of soil, coal, or equipment, or exposure of erodible surfaces, generate some amount of fugitive dust.

The initial operation is removal of topsoil and subsoil with large scrapers. The topsoil is carried by the scrapers to cover a previously mined and regraded area as part of the reclamation process or is placed in temporary stockpiles. The exposed overburden, the earth which is between the topsoil and the coal seam, is leveled, drilled and blasted. Then the overburden material is removed down to the coal seam, usually by a dragline or a shovel and truck operation. It is placed in the adjacent mined cut, forming a spoils pile. The uncovered coal seam is then drilled and blasted. A shovel or front end loader loads the broken coal into haul trucks, and it is taken out of the pit along graded haul roads to the tipple, or truck dump. Raw coal sometimes may be dumped onto a temporary storage pile and later rehandled by a front end loader or bulldozer.

At the tipple, the coal is dumped into a hopper that feeds the primary crusher, then is conveyed through additional coal preparation equipment such as secondary crushers and screens to the storage area. If the mine has open storage piles, the crushed coal passes through a coal stacker onto the pile. The piles, usually worked by bulldozers, are subject to wind erosion. From the storage area, the coal is conveyed to a train loading facility and is put into rail cars. At a captive mine, coal will go from the storage pile to the power plant.

During mine reclamation, which proceeds continuously throughout the life of the mine, overburden spoils piles are smoothed and contoured by bulldozers. Topsoil is placed on the graded spoils, and the land is prepared for revegetation by furrowing, mulching, etc. From the time an area is disturbed until the new vegetation emerges, all disturbed areas are subject to wind erosion.

8.24.2 Emissions

Predictive emission factor equations for open dust sources at western surface coal mines are presented in Tables 8.24-1 and 8.24-2. Each equation is for a single dust generating activity, such as vehicle traffic on unpaved roads. The predictive equation explains much of the observed variance in emission factors by relating emissions to three sets of source parameters: 1) measures of source activity or energy expended (e.g., speed and weight of a vehicle traveling on an unpaved road); 2) properties of the material being disturbed (e.g., suspendable fines in the surface material of an unpaved road); and 3) climate (in this case, mean wind speed).

The equations may be used to estimate particulate emissions generated per unit of source extent (e.g., vehicle distance traveled or mass of material transferred).

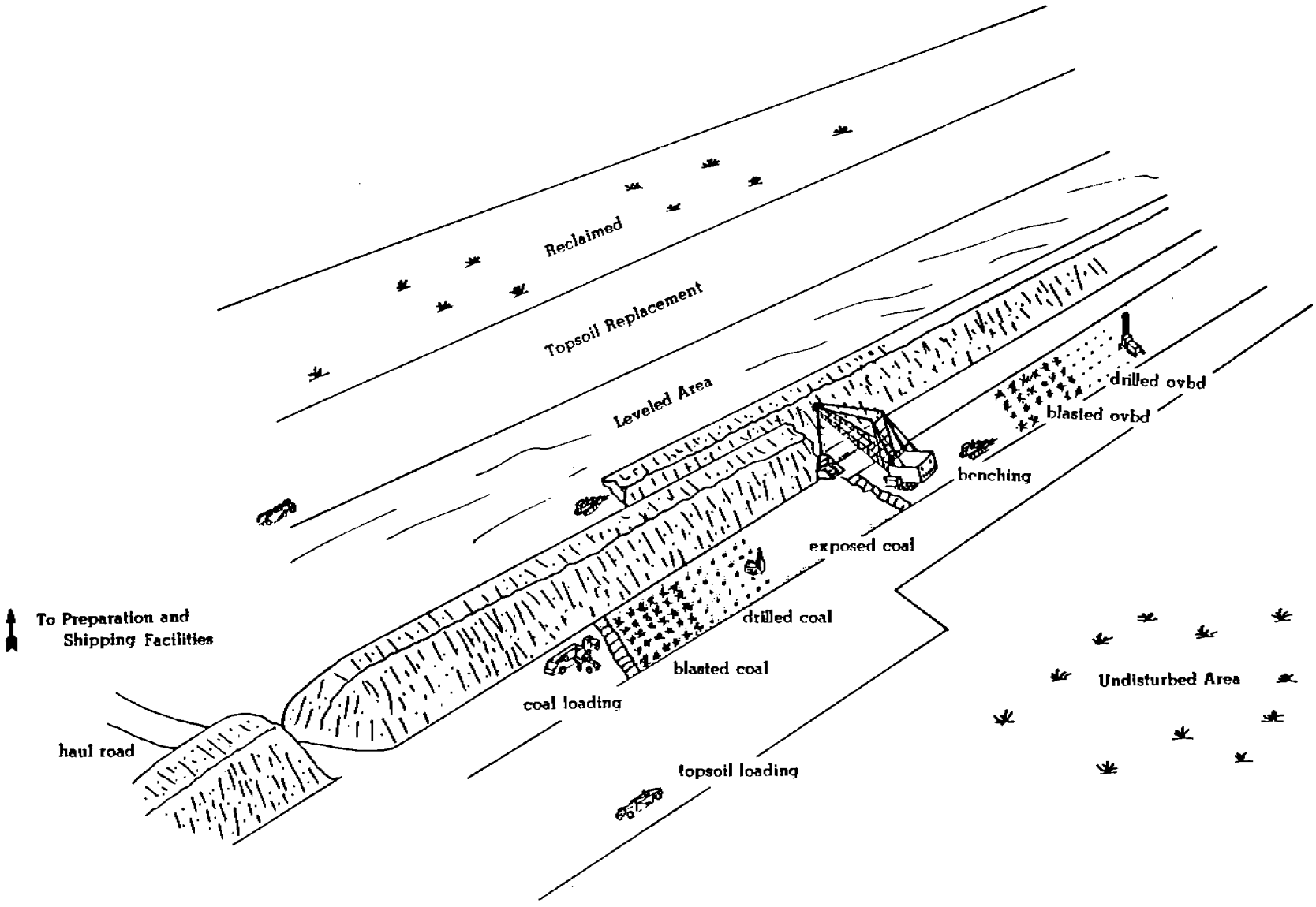

Figure 8.24-2. Operations at typical western surface coal mines.

TABLE 8.24-1. EMISSION FACTOR EQUATIONS FOR UNCONTROLLED OPEN DUST SOURCES AT WESTERN SURFACE COAL MINES (METRIC UNITS)[a]

Operation	Material	Emissions by particle size range (aerodynamic diameter)[b,c]			Units	Emission Factor Rating
		TSP (< ~ 30 μm)	< 15 μm	< 2.5 μm/TSP[d]		
Blasting	Coal or overburden	$\frac{344\ (A)^{0.8}}{(D)^{1.8}\ (M)^{1.9}}$	$\frac{811\ (A)^{0.6}}{(D)^{1.5}\ (M)^{2.3}}$	0.030	kg/blast	B
Truck loading	Coal	$\frac{0.580}{(M)^{1.2}}$	$\frac{0.0596}{(M)^{0.9}}$	0.019	kg/Mg	B
Bulldozing	Coal	$\frac{35.6\ (s)^{1.2}}{(M)^{1.3}}$	$\frac{8.44\ (s)^{1.5}}{(M)^{1.4}}$	0.022	kg/hr	B
	Overburden	$\frac{2.6\ (s)^{1.2}}{(M)^{1.3}}$	$\frac{0.45\ (s)^{1.5}}{(M)^{1.4}}$	0.105	kg/hr	B
Dragline	Overburden	$\frac{0.0046\ (d)^{1.1}}{(M)^{0.3}}$	$\frac{0.0029\ (d)^{0.7}}{(M)^{0.3}}$	0.017	kg/m^3	B
Scrapers (travel mode)		$9.6 \times 10^{-6}\ (s)^{1.3}\ (W)^{2.4}$	$2.2 \times 10^{-6}\ (s)^{1.4}\ (W)^{2.5}$	0.026	kg/VKT	A
Grading		$0.0034\ (S)^{2.5}$	$0.0056\ (S)^{2.0}$	0.031	kg/VKT	B
Vehicle traffic (light/medium duty)		$\frac{1.63}{(M)^{4.0}}$	$\frac{1.05}{(M)^{4.3}}$	0.040	kg/VKT	B
Haul trucks		$0.0019\ (w)^{3.4}\ (L)^{0.2}$	$0.0014\ (w)^{3.5}$	0.017	kg/VKT	A
Active storage pile (wind erosion and maintenance)	Coal	1.8 u	NA	NA	$\frac{kg}{(hectare)(hr)}$	C[e]

[a] All equations are from Reference 1, except for coal storage pile equation from Reference 4. TSP = total suspended particulate. VMT = vehicle miles traveled. VKT = vehicle kilometers traveled. NA = not available.
[b] TSP denotes what is measured by a standard high volume sampler (see Section 11.2).
[c] Symbols for equations:

A = area blasted (m^2)	d = drop height (m)
M = material moisture content (%)	W = mean vehicle weight (Mg)
D = hole depth (m)	S = mean vehicle speed (kph)
s = material silt content (%)	w = mean number of wheels
u = wind speed (m/sec)	L = road surface silt loading (g/m^2)

[d] Multiply the TSP predictive equation by this fraction to determine emissions in the < 2.5 μm size range.
[e] Rating applicable to Mine Types I, II and IV (see Tables 8.24-5 and 8.24-6).

TABLE 8.24-2. EMISSION FACTOR EQUATIONS FOR UNCONTROLLED OPEN DUST SOURCES AT WESTERN SURFACE COAL MINES (ENGLISH UNITS)[a]

Operation	Material	Emissions by particle size range (aerodynamic diameter)[b,c]			Units	Emission Factor Rating
		TSP (< ~ 30 μm)	< 15 μm	< 2.5 μm/TSP[d]		
Blasting	Coal or overburden	$\frac{961\ (A)^{0.8}}{(D)^{1.8}\ (M)^{1.9}}$	$\frac{2{,}550\ (A)^{0.6}}{(D)^{1.5}\ (M)^{2.3}}$	0.030	lb/blast	B
Truck loading	Coal	$\frac{1.16}{(M)^{1.2}}$	$\frac{0.119}{(M)^{0.9}}$	0.019	lb/T	B
Bulldozing	Coal	$\frac{78.4\ (s)^{1.2}}{(M)^{1.3}}$	$\frac{18.6\ (s)^{1.5}}{(M)^{1.4}}$	0.022	lb/hr	B
	Overburden	$\frac{5.7\ (s)^{1.2}}{(M)^{1.3}}$	$\frac{1.0\ (s)^{1.5}}{(M)^{1.4}}$	0.105	lb/hr	B
Dragline	Overburden	$\frac{0.0021\ (d)^{1.1}}{(M)^{0.3}}$	$\frac{0.0021\ (d)^{0.7}}{(M)^{0.3}}$	0.017	lb/yd^3	B
Scrapers (travel mode)		$2.7 \times 10^{-5}\ (s)^{1.3}\ (W)^{2.4}$	$6.2 \times 10^{-6}\ (s)^{1.4}\ (W)^{2.5}$	0.026	lb/VMT	A
Grading		$0.040\ (S)^{2.5}$	$0.051\ (S)^{2.0}$	0.031	lb/VMT	B
Vehicle traffic (light/medium duty)		$\frac{5.79}{(M)^{4.0}}$	$\frac{3.72}{(M)^{4.3}}$	0.040	lb/VMT	B
Haul trucks		$0.0067\ (w)^{3.4}\ (L)^{0.2}$	$0.0051\ (w)^{3.5}$	0.017	lb/VMT	A
Active storage pile (wind erosion and maintenance)	Coal	1.6 u	NA	NA	$\frac{lb}{(acre)(hr)}$	C[e]

[a] All equations are from Reference 1, except for coal storage pile equation from Reference 4. TSP = total suspended particulate. VMT = vehicle miles traveled. VKT = vehicle kilometers traveled. NA = not available.

[b] TSP denotes what is measured by a standard high volume sampler (see Section 11.2).

[c] Symbols for equations:

A = area blasted (ft^2)
M = material moisture content (%)
D = hole depth (ft)
s = material silt content (%)
u = wind speed (m/sec)
d = drop height (ft)
W = mean vehicle weight (tons)
S = mean vehicle speed (mph)
w = mean number of wheels
L = road surface silt loading (g/m^2)

[d] Multiply the TSP predictive equation by this fraction to determine emissions in the < 2.5 μm size range.

[e] Rating applicable to Mine Types I, II and IV (see Tables 8.24-5 and 8.24-6).

The equations were developed through field sampling various western surface mine types and are thus applicable to any of the surface coal mines located in the western United States.

In Tables 8.24-1 and 8.24-2, the assigned quality ratings apply within the ranges of source conditions that were tested in developing the equations, given in Table 8.24-3. However, the equations are derated one letter value (e.g., A to B) if applied to eastern surface coal mines.

TABLE 8.24-3. TYPICAL VALUES FOR CORRECTION FACTORS APPLICABLE TO THE PREDICTIVE EMISSION FACTOR EQUATIONS[a]

Source	Correction factor	Number of test samples	Range	Geometric mean	Units
Blasting	Moisture	5	7.2 - 38	17.2	%
	Depth	18	6 - 41	7.9	m
			20 - 135	25.9	ft
	Area	18	90 - 9,000	1,800	m^2
			1,000 - 100,000	19,000	ft^2
Coal loading	Moisture	7	6.6 - 38	17.8	%
Bulldozers					
Coal	Moisture	3	4.0 - 22.0	10.4	%
	Silt	3	6.0 - 11.3	8.6	%
Overburden	Moisture	8	2.2 - 16.8	7.9	%
	Silt	8	3.8 - 15.1	6.9	%
Dragline	Drop distance	19	1.5 - 30	8.6	m
			5 - 100	28.1	ft
	Moisture	7	0.2 - 16.3	3.2	%
Scraper	Silt	10	7.2 - 25.2	16.4	%
	Weight	15	33 - 64	48.8	Mg
			36 - 70	53.8	tons
Grader	Speed	7	8.0 - 19.0	11.4	kph
			5.0 - 11.8	7.1	mph
Light/medium duty vehicles	Moisture	7	0.9 - 1.7	1.2	%
Haul truck	Wheels	29	6.1 - 10.0	8.1	number
	Silt loading	26	3.8 - 254	40.8	g/m^2
			34 - 2,270	364	lb/acre

[a] Reference 1.

In using the equations to estimate emissions from sources in a specific western surface coal mine, it is necessary that reliable values for correction parameters be determined for the specific sources of interest, if the assigned quality ratings of the equations are to apply. For example, actual silt content of coal or overburden measured at a facility

should be used instead of estimated values. In the event that site specific values for correction parameters cannot be obtained, the appropriate geometric mean values from Table 8.24-3 may be used, but the assigned quality rating of each emission factor equation is reduced by one level (e.g., A to B).

Emission factors for open dust sources not covered in Table 8.24-3 are in Table 8.24-4. These factors were determined through source testing at various western coal mines.

The factors in Table 8.24-4 for mine locations I through V were developed for specific geographical areas. Tables 8.24-5 and 8.24-6 present characteristics of each of these mines (areas). A "mine specific" emission factor should be used only if the characteristics of the mine for which an emissions estimate is needed are very similar to those of the mine for which the emission factor was developed. The other (nonspecific) emission factors were developed at a variety of mine types and thus are applicable to any western surface coal mine.

As an alternative to the single valued emission factors given in Table 8.24-4 for train or truck loading and for truck or scraper unloading, two empirically derived emission factor equations are presented in Section 11.2.3 of this document. Each equation was developed for a source operation (i.e., batch drop and continuous drop, respectively), comprising a single dust generating mechanism which crosses industry lines.

Because the predictive equations allow emission factor adjustment to specific source conditions, the equations should be used in place of the factors in Table 8.24-4 for the sources identified above, if emission estimates for a specific western surface coal mine are needed. However, the generally higher quality ratings assigned to the equations are applicable only if 1) reliable values of correction parameters have been determined for the specific sources of interest and 2) the correction parameter values lie within the ranges tested in developing the equations. Table 8.24-3 lists measured properties of aggregate materials which can be used to estimate correction parameter values for the predictive emission factor equations in Chapter 11, in the event that site specific values are not available. Use of mean correction parameter values from Table 8.24-3 reduces the quality ratings of the emission factor equations in Chapter 11 by one level.

TABLE 8.24-4. UNCONTROLLED PARTICULATE EMISSION FACTORS FOR OPEN DUST SOURCES AT WESTERN SURFACE COAL MINES

Source	Material	Mine location[a]	TSP emission factor[b]	Units	Emission Factor Rating
Drilling	Overburden	Any	1.3	lb/hole	B
			0.59	kg/hole	B
	Coal	V	0.22	lb/hole	E
			0.10	kg/hole	E
Topsoil removal by scraper	Topsoil	Any	0.058	lb/T	E
			0.029	kg/Mg	E
		IV	0.44	lb/T	D
			0.22	kg/Mg	D
Overburden replacement	Overburden	Any	0.012	lb/T	C
			0.0060	kg/Mg	C
Truck loading by power shovel (batch drop)[c]	Overburden	V	0.037	lb/T	C
			0.018	kg/Mg	C
Train loading (batch or continuous drop)[c]	Coal	Any	0.028	lb/T	D
			0.014	kg/Mg	D
		III	0.0002	lb/T	D
			0.0001	kg/Mg	D
Bottom dump truck unloading (batch drop)[c]	Overburden	V	0.002	lb/T	E
			0.001	kg/T	E
	Coal	IV	0.027	lb/T	E
			0.014	kg/Mg	E
		III	0.005	lb/T	E
			0.002	kg/Mg	E
		II	0.020	lb/T	E
			0.010	kg/Mg	E
		I	0.014	lb/T	D
			0.0070	kg/Mg	D
		Any	0.066	lb/T	D
			0.033	kg/Mg	D
End dump truck unloading (batch drop)[c]	Coal	V	0.007	lb/T	E
			0.004	kg/Mg	E
Scraper unloading (batch drop)[c]	Topsoil	IV	0.04	lb/T	C
			0.02	kg/Mg	C
Wind erosion of exposed areas	Seeded land, stripped overburden, graded overburden	Any	0.38	$\frac{T}{(acre)(yr)}$	C
			0.85	$\frac{Mg}{(hectare)(yr)}$	C

[a] Roman numerals I through V refer to specific mine locations for which the corresponding emission factors were developed (Reference 4). Tables 8.24-4 and 8.24-5 present characteristics of each of these mines. See text for correct use of these "mine specific" emission factors. The other factors (from Reference 5 except for overburden drilling from Reference 1) can be applied to any western surface coal mine.

[b] Total suspended particulate (TSP) denotes what is measured by a standard high volume sampler (see Section 11.2).

[c] Predictive emission factor equations, which generally provide more accurate estimates of emissions, are presented in Chapter 11.

TABLE 8.24-5. GENERAL CHARACTERISTICS OF SURFACE COAL MINES REFERRED TO IN TABLE 8.24-4[a]

Mine	Location	Type of coal mined	Terrain	Vegetative cover	Surface soil type and erodibility index	Mean wind speed		Mean annual precipitation	
						m/s	mph	cm	in.
I	N.W. Colorado	Subbitum.	Moderately steep	Moderate, sagebrush	Clayey, loamy (71)	2.3	5.1	38	15
II	S.W. Wyoming	Subbitum.	Semirugged	Sparse, sagebrush	Arid soil with clay and alkali or carbonate accumulation (86)	6.0	13.4	36	14
III	S.E. Montana	Subbitum.	Gently rolling to semirugged	Sparse, moderate, prairie grassland	Shallow clay loamy deposits on bedrock (47)	4.8	10.7	28 - 41	11 - 16
IV	Central North Dakota	Lignite	Gently rolling	Moderate, prairie grassland	Loamy, loamy to sandy (71)	5.0	11.2	43	17
V	N.E. Wyoming	Subbitum.	Flat to gently rolling	Sparse, sagebrush	Loamy, sandy, clayey, and clay loamy (102)	6.0	13.4	36	14

[a] Reference 4.

TABLE 8.24-6. OPERATING CHARACTERISTICS OF THE COAL MINES REFERRED TO IN TABLE 8.24-4[a]

Parameter	Required information	Units	Mine I	Mine II	Mine III	Mine IV	Mine V
Production rate	Coal mined	10^6 T/yr	1.13	5.0	9.5	3.8	12.0[b]
Coal transport	Avg. unit train frequency	per day	NA	NA	2	NA	2
Stratigraphic data	Overburden thickness	ft	21	80	90	65	35
	Overburden density	lb/yd^3	4000	3705	3000	-	-
	Coal seam thicknesses	ft	9,35	15,9	27	2,4,8	70
	Parting thicknesses	ft	50	15	NA	32,16	NA
	Spoils bulking factor	%	22	24	25	20	-
	Active pit depth	ft	52	100	114	80	105
Coal analysis data	Moisture	%	10	18	24	38	30
	Ash	%, wet	8	10	8	7	6
	Sulfur	%, wet	0.46	0.59	0.75	0.65	0.48
	Heat content	Btu/lb	11000	9632	8628	8500	8020
Surface disposition	Total disturbed land	acre	168	1030	2112	1975	217
	Active pit	acre	34	202	87	-	71
	Spoils	acre	57	326	144	-	100
	Reclaimed	acre	100	221	950	-	100
	Barren land	acre	-	30	455	-	-
	Associated disturbances	acre	12	186	476	-	46
Storage	Capacity	ton	NA	NA	-	NA	48000
Blasting	Frequency, coal	per week	4	4	3	7	7[b]
	Frequency, overburden	per week	3	0.5	3	NA	7[b]
	Area blasted, coal	ft^2	16000	40000	-	30000	-
	Area blasted, overburden	ft^2	20000	-	-	NA	-

[a] Reference 4. NA = not applicable. Dash = not available.
[b] Estimate.

References for Section 8.24

1. K. Axetell and C. Cowherd, Improved Emission Factors for Fugitive Dust from Western Surface Coal Mining Sources, 2 Volumes, EPA Contract No. 68-03-2924, U. S. Environmental Protection Agency, Cincinnati, OH, July 1981.

2. Reserve Base of U. S. Coals by Sulfur Content: Part 2, The Western States, IC8693, Bureau of Mines, U. S. Department of the Interior, Washington, DC, 1975.

3. Bituminous Coal and Lignite Production and Mine Operations - 1978, DOE/EIA-0118(78), U. S. Department of Energy, Washington, DC, June 1980.

4. K. Axetell, Survey of Fugitive Dust from Coal Mines, EPA-908/1-78-003, U. S. Environmental Protection Agency, Denver, CO, February 1978.

5. D. L. Shearer, et al., Coal Mining Emission Factor Development and Modeling Study, Amax Coal Company, Carter Mining Company, Sunoco Energy Development Company, Mobil Oil Corporation, and Atlantic Richfield Company, Denver, CO, July 1981.

PETROLEUM INDUSTRY

9.1 PETROLEUM REFINING[1]

9.1.1 General Description

The petroleum refining industry converts crude oil into more than 2500 refined products, including liquefied petroleum gas, gasoline, kerosene, aviation fuel, diesel fuel, fuel oils, lubricating oils, and feedstocks for the petrochemical industry. Petroleum refinery activities start with receipt of crude for storage at the refinery, include all petroleum handling and refining operations, and terminate with storage preparatory to shipping the refined products from the refinery.

The petroleum refining industry employs a wide variety of processes. A refinery's processing flow scheme is largely determined by the composition of the crude oil feedstock and the chosen slate of petroleum products. The example refinery flow scheme presented in Figure 9.1-1 shows the general processing arrangement used by refineries in the United States for major refinery processes. The arrangement of these processes will vary among refineries, and few, if any, employ all of these processes. Petroleum refining processes having direct emission sources are presented in bold-line boxes on the figure.

Listed below are five categories of general refinery processes and associated operations:

1. Separation processes
   a. atmospheric distillation
   b. vacuum distillation
   c. light ends recovery (gas processing)

2. Petroleum conversion processes
   a. cracking (thermal and catalytic)
   b. reforming
   c. alkylation
   d. polymerization
   e. isomerization
   f. coking
   g. visbreaking

3. Petroleum treating processes
   a. hydrodesulfurization
   b. hydrotreating
   c. chemical sweetening
   d. acid gas removal
   e. deasphalting

4. Feedstock and product handling
   a. storage
   b. blending
   c. loading
   d. unloading

5. Auxiliary facilities
   a. boilers
   b. wastewater treatment
   c. hydrogen production

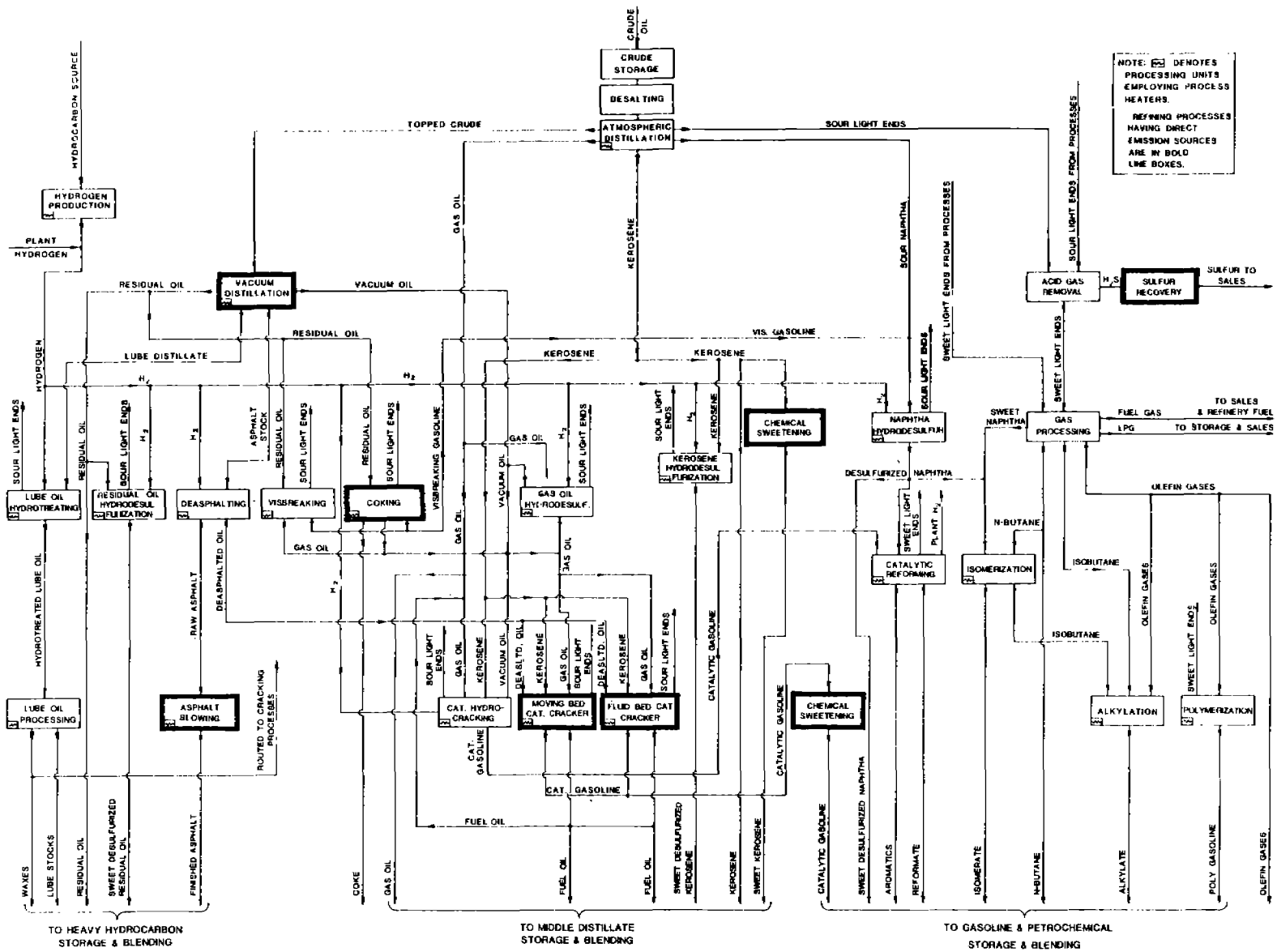

9.1-1. Schematic of an example integrated petroleum refinery.

d. sulfur recovery plant
e. cooling towers
f. blowdown system
g. compressor engines

These refinery processes are defined in the following section and their emission characteristics and applicable emission control technology are discussed.

9.1.1.1. Separation Processes — The first phase in petroleum refining operations is the separation of crude oil into its major constituents using three petroleum separation processes: atmospheric distillation, vacuum distillation, and light ends recovery (gas processing). Crude oil consists of a mixture of hydrocarbon compounds including paraffinic, naphthenic, and aromatic hydrocarbons plus small amounts of impurities including sulfur, nitrogen, oxygen, and metals. Refinery separation processes separate these crude oil constituents into common-boiling-point fractions.

9.1.1.2. Conversion Processes—To meet the demands for high-octane gasoline, jet fuel, and diesel fuel, components such as residual oils, fuel oils, and light ends are converted to gasolines and other light fractions. Cracking, coking, and visbreaking processes are used to break large petroleum molecules into smaller petroleum molecules. Polymerization and alkylation processes are used to combine small petroleum molecules into larger ones. Isomerization and reforming processes are applied to rearrange the structure of petroleum molecules to produce higher-value molecules of a similar molecular size.

9.1.1.3. Treating Processes—Petroleum treating processes stabilize and upgrade petroleum products by separating them from less desirable products and by removing objectionable elements. Undesirable elements such as sulfur, nitrogen, and oxygen are removed by hydrodesulfurization, hydrotreating, chemical sweetening and acid gas removal. Treating processes employed primarily for the separation of petroleum products include such processes as deasphalting. Desalting is used to remove salt, minerals, grit, and water from crude oil feed stocks prior to refining. Asphalt blowing is used for polymerizing and stabilizing asphalt to improve its weathering characteristics.

9.1.1.4. Feedstock and Product Handling—The refinery feedstock and product handling operations consist of unloading, storage, blending, and loading activities.

9.1.1.5. Auxiliary Facilities—A wide assortment of processes and equipment not directly involved in the refining of crude oil are used in functions vital to the operation of the refinery. Examples are boilers, wastewater treatment facilities, hydrogen plants, cooling towers, and sulfur recovery units. Products from auxiliary facilities (clean water, steam, and process heat) are required by most refinery process units throughout the refinery.

9.1.2 Process Emission Sources and Control Technology

This section presents descriptions of those refining processes that are significant air pollutant contributors. Process flow schemes, emission characteristics, and emission control technology are discussed for each process. Table 9.1-1 lists the emission factors for direct-process emissions in petroleum refineries. The following process emission sources are discussed in this section on petroleum refining emissions:

1. Vacuum distillation.
2. Catalytic cracking.
3. Thermal cracking processes.
4. Utility boilers.
5. Heaters.

6. Compressor engines.
7. Blowdown systems.
8. Sulfur recovery.

9.1.2.1. Vacuum Distillation—Topped crude withdrawn from the bottom of the atmospheric distillation column is composed of high-boiling-point hydrocarbons. When distilled at atmospheric pressures, the crude oil decomposes and polymerizes to foul equipment. To separate topped crude into components, it must be distilled in a vacuum column at a very low pressure and in a steam atmosphere.

In the vacuum distillation unit, topped crude is heated with a process heater to temperatures ranging from 700 to 800° F (370 to 425° C). The heated topped crude is flashed into a multi-tray vacuum distillation column operating at vacuums ranging from 0.5 to 2 psia (350 to 1400 kg/m^2). In the vacuum column, the topped crude is separated into common-boiling-point fractions by vaporization and condensation. Stripping steam is normally injected into the bottom of the vacuum distillation column to assist in the separation by lowering the effective partial pressures of the components. Standard petroleum fractions withdrawn from the vacuum distillation column include lube distillates, vacuum oil, asphalt stocks, and residual oils. The vacuum in the vacuum distillation column is normally maintained by the use of steam ejectors but may be maintained by the use of vacuum pumps.

The major sources of atmospheric emissions from the vacuum distillation column are associated with the steam ejectors or vacuum pumps. A major portion of the vapors withdrawn from the column by the ejectors or pumps are recovered in condensers. Historically, the noncondensable portion of the vapors has been vented to the atmosphere from the condensers. There are approximately 50 pounds (23 kg) of noncondensable hydrocarbons per 1000 barrels of topped crude processed in the vacuum distillation column.[2,12,13] A second source of atmospheric emissions from vacuum distillation columns is combustion products from the process heater. Process heater requirements for the vacuum distillation column are approximately 37,000 Btu per barrel (245 Joules/cm^3) of topped crude processed in the vacuum column. Process heater emissions and their control are discussed later in this section. Fugitive hydrocarbon emissions from leaking seals and fittings are also associated with the vacuum distillation unit, but these are minimized by the low operating pressures and low vapor pressures in the unit. Fugitive emission sources are also discussed later in this section.

Control technology applicable to the noncondensable emissions vented from the vacuum ejectors or pumps include venting into blowdown systems or fuel gas systems, and incineration in furnaces or waste heat boilers.[2,12,13] These control techniques are generally greater than 99 percent efficient in the control of hydrocarbon emissions, but they also contribute to the emission of combustion products.

9.1.2.2. Catalytic Cracking—Catalytic cracking, using heat, pressure, and catalysts, converts heavy oils into lighter products with product distributions favoring the more valuable gasoline and distillate blending components. Feedstocks are usually gas oils from atmospheric distillation, vacuum distillation, coking, and deasphalting processes. These feedstocks typically have a boiling range of 650 to 1000° F (340 to 540° C). All of the catalytic cracking processes in use today can be classified as either fluidized-bed or moving-bed units.

Fluidized-bed Catalytic Cracking (FCC) — The FCC process uses a catalyst in the form of very fine particles that act as a fluid when aerated with a vapor. Fresh feed is preheated in a process heater and introduced into the bottom of a vertical transfer line or riser with hot regenerated catalyst. The hot catalyst vaporizes the feed bringing both to the desired reaction temperature, 880 to 980° F (470 to 525° C). The high activity of modern catalysts causes most of the cracking reactions to take place in the riser as the catalyst and oil mixture flows upward into the reactor. The hydrocarbon vapors are separated from the catalyst particles by cyclones in the reactor. The reaction products are sent to a fractionator for separation.

The spent catalyst falls to the bottom of the reactor and is steam stripped as it exists the reactor bottom to remove absorbed hydrocarbons. The spent catalyst is then conveyed to a regenerator. In the regenerator, coke deposited on the catalyst as a result of the cracking reactions is burned off in a controlled combustion process with preheated air. Regenerator temperature is usually 1100 to 1250° F (590 to 675° C). The catalyst is then recycled to be mixed with fresh hydrocarbon feed.

Moving-bed Catalytic Cracking (TCC)— In the TCC process, catalyst beads (~0.5 cm) flow by gravity into the top of the reactor where they contact a mixed-phase hydrocarbon feed. Cracking reactions take place as the catalyst and hydrocarbons move concurrently downward through the reactor to a zone where the catalyst is separated from the vapors. The gaseous reaction products flow out of the reactor to the fractionation section of the unit. The catalyst is steam stripped to remove any adsorbed hydrocarbons. It then falls into the regenerator where coke is burned from the catalyst with air. The regenerated catalyst is separated from the flue gases and recycled to be mixed with fresh hydrocarbon feed. The operating temperatures of the reactor and regenerator in the TCC process are comparable to those in the FCC process.

Air emissions from catalytic cracking processes are (1) combustion products from process heaters and (2) flue gas from catalyst regeneration. Emissions from process heaters are discussed later in this section. Emissions from the catalyst regenerator include hydrocarbons, oxides of sulfur, ammonia, aldehydes, oxides of nitrogen, cyanides, carbon monoxide, and particulates (Table 9.1-1). The particulate emissions from FCC units are much greater than those from TCC units because of the higher catalyst circulation rates used.[2,3,5]

FCC particulate emissions are controlled by cyclones and/or electrostatic precipitators. Particulate control efficiencies are as high as 80 to 85 percent.[3,5] Carbon monoxide wasteheat boilers reduce the carbon monoxide and hydrocarbon emissions from FCC units to negligible levels.[3] TCC catalyst regeneration produces similar pollutants to FCC units but in much smaller quantities (Table 9.1-1). The particulate emissions from a TCC unit are normally controlled by high-efficiency cyclones. Carbon monoxide and hydrocarbon emissions from a TCC unit are incinerated to negligible levels by passing the flue gases through a process heater fire-box or smoke plume burner. In some installations, sulfur oxides are removed by passing the regenerator flue gases through a water or caustic scrubber.[2,3,5]

9.1.2.3 Thermal Cracking — Thermal cracking processes include visbreaking and coking, which break heavy oil molecules by exposing them to high temperatures.

Visbreaking — Topped crude or vacuum residuals are heated and thermally cracked (850 to 900° F, 50 to 250 psig) (455 to 480° C, 3.5 to 17.6 kg/cm^2) in the visbreaker furnace to reduce the viscosity or pour point of the charge. The cracked products are quenched with gas oil and flashed into a fractionator. The vapor overhead from the fractionator is separated into light distillate products. A heavy distillate recovered from the fractionator liquid can be used as a fuel oil blending component or used as catalytic cracking feed.

Coking — Coking is a thermal cracking process used to convert low value residual fuel oil to higher value gas oil and petroleum coke. Vacuum residuals and thermal tars are cracked in the coking process at high temperature and low pressure. Products are petroleum coke, gas oils, and lighter petroleum stocks. Delayed coking is the most widely used process today, but fluid coking is expected to become an important process in the future.

In the delayed coking process, heated charge stock is fed into the bottom section of a fractionator where light ends are stripped from the feed. The stripped feed is then combined with recycle products from the coke drum and rapidly heated in the coking heater to a temperature of 900 to 1100° F (480 to 590° C). Steam injection is used to control the residence time in the heater. The vapor-liquid feed leaves the heater, passing to a coke drum where, with controlled residence time, pressure (25 to 30 psig) (1.8 to 2.1 kg/cm^2), and temperature (750° F) (400° C), it is cracked to form coke and vapors. Vapors from the drum return to the fractionator where the thermal cracking products are recovered.

Table 9.1-1. EMISSION FACTORS FOR PETROLEUM REFINERIES

Process	Particulates	Sulfur oxides (as SO_2)	Carbon monoxide	Total hydro-carbons [a]	Nitrogen oxides (as NO_2)	Aldehydes	Ammonia	Emission factor rating
Boilers and process heaters,								
Fuel Oil	See Section 1.3 - Fuel Oil Combustion							
Natural Gas	See Section 1.4 - Natural Gas Combustion							
Fluid catalytic cracking units [b]								
Uncontrolled								
lb/10^3bbl fresh feed	242 (93 to 340) [c]	493 (100 to 525)	13,700	220	71.0 (37.1 to 145.0)	19	54	B
kg/10^3 liters fresh feed	0.695 (0.267 to 0.976)	1.413 (0.286 to 1.505)	39.2	0.630	0.204 (0.107 to 0.416)	0.054	0.155	B
Electrostatic precipitator and CO boiler								
lb/10^3 bbl fresh fed	45 [d] (7 to 150)	493 (100 to 525)	Neg [e]	Neg	71.0 [f] (37.1 to 145.0)	Neg	Neg	B
kg/10^3 liters fresh feed	0.128 (0.020 to 0.428)	1.413 (0.286 to 1.505)	Neg	Neg	0.204 (0.107 to 0.416)	Neg	Neg	B
Moving-bed catalytic cracking units [g]								
lb/10^3 bbl fresh feed	17	60	3,800	87	5	12	6	B
kg/10^3 liters fresh feed	0.049	0.171	10.8	0.250	0.014	0.034	0.017	B
Fluid coking units [h]								
Uncontrolled								
lb/10^3 bbl fresh feed	523	NA [i]	NA	NA	NA	NA	NA	C
kg/10^3 liters fresh feed	1.50	NA	NA	NA	NA	NA	NA	C
Electrostatic precipitator and CO boiler								
lb/10^3 bbl fresh feed	6.85	NA	Neg	Neg	NA	Neg	Neg	C
kg/10^3 liters fresh feed	0.0196	NA	Neg	Neg	NA	Neg	Neg	C
Delayed coking units	NA	NA	NA	NA	NA	NA	NA	
Compressor engines [j]								
Reciprocating engines								
lb/10^3 ft^3 gas burned	Neg	2s [k]	0.43	1.4	3.4	0.1	0.2	B
kg/10^3 m^3 gas burned	Neg	32s	7.02	21.8	55.4	1.61	3.2	B
Gas turbines								
lb/10^3 ft^3 gas burned	Neg	2s	0.12	0.02	0.3	NA	NA	B
kg/10^3 m^3 gas burned	Neg	32s	1.94	0.28	4.7	NA	NA	B

Table 9.1-1. (Continued) EMISSION FACTORS FOR PETROLEUM REFINERIES

Process	Particulates	Sulfur oxides (as SO_2)	Carbon monoxide	Total hydro-carbons	Nitrogen oxides (as NO_2)	Aldehydes	Ammonia	Emission factor rating
Blowdown systems[l]								
Uncontrolled								
lb/10^3 bbl refinery feed	Neg	Neg	Neg	580	Neg	Neg	Neg	C
kg/10^3 liters refinery feed	Neg	Neg	Neg	1.662	Neg	Neg	Neg	C
Vapor recovery system and flaring								
lb/10^3 bbl refinery feed	Neg	26.9	4.3	0.8	18.9	Neg	Neg	C
kg/10^3 liters refinery feed	Neg	0.077	0.012	0.002	0.054	Neg	Neg	C
Vacuum distillation[m] column condensers								
Uncontrolled								
lb/10^3 bbl refinery feed	Neg	Neg	Neg	18	Neg	Neg	Neg	C
kg/10^3 liters refinery feed	Neg	Neg	Neg	0.052	Neg	Neg	Neg	C
lb/10^3 bbl vacuum feed	Neg	Neg	Neg	50 (0-130)	Neg	Neg	Neg	C
kg/10^3 liters vacuum feed	Neg	Neg	Neg	0.144	Neg	Neg	Neg	C
Controlled	Neg	Neg	Neg	Neg	Neg	Neg	Neg	C
Claus plant and tail gas treatment		See section 5.18						

[a] Overall, less than 1 percent by weight of the total hydrocarbon emissions are methane.
[b] References 2 through 8.
[c] Numbers in parenthesis indicate range of values observed.
[d] Under the New Source Performance Standards, controlled FCC regenerators will have particulate emissions lower than 19 lb/10^3 bbl fresh feed.
[e] Negligible emission.
[f] May be higher due to the combustion of ammonia.
[g] Reference 2.
[h] Reference 5.
[i] NA, Not Available.
[j] References 9, 10.
[k] s = Refinery gas sulfur content (lb/1000 ft^3): Factors based on 100 percent combustion of sulfur to SO_2.
[l] References 2, 11.
[m] References 2, 12, 13.

In the fluid coking process, typified by Flexicoking, residual oil feeds are injected into the reactor where they are thermally cracked, yielding coke and a wide range of vapor products. Vapors leave the reactor and are quenched in a scrubber where entrained coke fines are removed. The vapors are then fractionated. Coke from the reactor enters a heater and is devolatilized. The volatiles from the heater are treated for fines and sulfur removal to yield a particulate free, low-sulfur fuel gas. The devolatilized coke is circulated from the heater to a gasifier where 95 percent of the reactor coke is gasified at high temperature with steam and air or oxygen. The gaseous products and coke from the gasifier are returned to the heater to supply heat for the devolatilization. These gases exit the heater with the heater volatiles through the same fines and sulfur removal processes.

From available literature, it is unclear what emissions are released and where they are released. Air emissions from thermal cracking processes include coke dust from decoking operations, combustion gases from the visbreaking and coking process heaters, and fugitive emissions. Emissions from the process heaters are discussed later in this section. Fugitive emissions from miscellaneous leaks are significant because of the high temperatures involved, and are dependent upon equipment type and configuration, operating conditions, and general maintenance practices. Fugitive emissions are also discussed later in this section. Particulate emissions from delayed coking operations are potentially very significant. These emissions are associated with removing the coke from the coke drum and subsequent handling and storage operations. Hydrocarbon emissions are also associated with cooling and venting the coke drum prior to coke removal. However, comprehensive data for delayed coking emissions have not been included in available literature. [4,5]

Particulate emission control is accomplished in the decoking operation by wetting down the coke.[5] Generally, there is no control of hydrocarbon emissions from delayed coking. However, some facilities are now collecting coke drum emissions in an enclosed system and routing them to a refinery flare.[4,5]

9.1.2.4 Utilities Plant — The utilities plant supplies the steam necessary for the refinery. Although the steam can be used to produce electricity by throttling through a turbine, it is primarily used for heating and separating hydrocarbon streams. When used for heating, the steam usually heats the petroleum indirectly in heat exchangers and returns to the boiler. In direct contact operations, the steam can serve as a stripping medium or a process fluid. Steam may also be used in vacuum ejectors to produce a vacuum. Emissions from boilers and applicable emission control technology are discussed in much greater detail in Chapter 1.0.

9.1.2.5 Sulfur Recovery Plant — Sulfur recovery plants are used in petroleum refineries to convert hydrogen sulfide (H_2S) separated from refinery gas streams into the more disposable by-product, elemental sulfur. Emissions from sulfur recovery plants and their control are discussed in Section 5.18.

9.1.2.6 Blowdown System — The blowdown system provides for the safe disposal of hydrocarbons (vapor and liquid) discharged from pressure relief devices.

Most refining processing units and equipment subject to planned or unplanned hydrocarbon discharges are manifolded into a collection unit, called the blowdown system. By using a series of flash drums and condensers arranged in decreasing pressure, the blowdown is separated into vapor and liquid cuts. The separated liquid is recycled into the refinery. The gaseous cuts can either be smokelessly flared or recycled.

Uncontrolled blowdown emissions primarily consist of hydrocarbons, but can also include any of the other criteria pollutants. The emission rate in a blowdown system is a function of the amount of equipment manifolded into the system, the frequency of equipment discharges, and the blowdown system controls.

Emissions from the blowdown system can be effectively controlled by combustion of the noncondensables in a flare. To obtain complete combustion or smokeless burning (as required by most states), steam is injected in the combustion zone of the flare to provide turbulence and to inspirate air. Steam injection also reduces emissions of nitrogen oxides by lowering the flame temperature. Controlled emissions are listed in Table 9.1-1.[2,11]

9.1.2.7 Process Heaters - Process heaters (furnaces) are used extensively in refineries to supply the heat necessary to raise the temperature of feed materials to reaction or distillation level. They are designed to raise petroleum fluid temperatures to a maximum of about 950°F (510°C). The fuel burned may be refinery gas, natural gas, residual fuel oils, or combinations, depending on economics, operating conditions and emission requirements. Process heaters may also use carbon monoxide-rich regenerator flue gas as fuel.

All the criteria pollutants are emitted from process heaters. The quantity of these emissions is a function of the type of fuel burned, the nature of the contaminants in the fuel, and the heat duty of the furnace. Sulfur oxide can be controlled by fuel desulfurization or flue gas treatment. Carbon monoxide and hydrocarbons can be limited by more combustion efficiency. Currently, four general techniques or modifications for the control of nitrogen oxides are being investigated: combustion modification, fuel modification, furnace design and flue gas treatment. Several of these techniques are presently being applied to large utility boilers, but their applicability to process heaters has not been established.[2,14]

9.1.2.8 Compressor Engines - Many older refineries run high pressure compressors with reciprocating and gas turbine engines fired with natural gas. Natural gas has usually been a cheap, abundant source of energy. Examples of refining units operating at high pressure include hydrodesulfurization, isomerization, reforming and hydrocracking. Internal combustion engines are less reliable and harder to maintain than steam engines or electric motors. For this reason, and because of increasing natural gas costs, very few such units have been installed in the last few years.

The major source of emissions from compressor engines is combustion products in the exhaust gas. These emissions include carbon monoxide, hydrocarbons, nitrogen oxides, aldehydes and ammonia. Sulfur oxides may also be present, depending on the sulfur content of the natural gas. All these emissions are significantly higher in exhaust of reciprocating engines than from turbine engines.

The major emission control technique applied to compressor engines is carburetion adjustment similar to that applied on automobiles. Catalyst systems similar to those applied to automobiles may also be effective in reducing emissions, but their use has not been reported.

9.1.2.9 Sweetening - Sweetening of distillates is accomplished by the conversion of mercaptans to alkyl disulfides in the presence of a catalyst. Conversion may be followed by an extraction step for the removal of the alkyl disulfides. In the conversion process, sulfur is added to the sour distillate with a small amount of caustic and air. The mixture is then passed upward through a fixed bed catalyst counter to a flow of caustic entering at the top of the vessel. In the conversion and extraction process, the sour distillate is washed with caustic and then is contacted in the extractor with a solution of catalyst and

Table 9.1-2. FUGITIVE EMISSION FACTORS FOR PETROLEUM REFINERIES[a]

Emission Source	Process Stream Type[b]	Emission Factor Units	Emission Factors: Uncontrolled Emissions[c]		Emission Factors: Controlled Emissions	Applicable Control Technology	Emission Factor Rating
Pipeline valves[d]	II	lb/hr-source	0.059	(0.030 - 0.110)	NA	Monitoring and maintenance programs	A
		kg/day-source	0.64	(0.32 - 1.19)			
	III	"	0.024	(0.017 - 0.036)	NA		A
		"	0.26	(0.18 - 0.39)			
	IV	"	0.0005	(0.0002- 0.0015)	NA		A
		"	0.005	(0.002 - 0.016)			
	V	"	0.018	(0.007 - 0.045)	NA		A
		"	0.20	(0.08 - 0.49)			
Open ended valves[d,e]	I	"	0.005	(0.0016- 0.016)	NA	Installation of cap or plug on open end of valve/line	A
		"	0.05	(0.017 - 0.17)			
Flanges[d]	I	"	0.00056	(0.0002- 0.0025)	NA	Monitoring and maintenance programs	A
			0.0061	(0.002 - 0.027)			
Pump seals[d]	III	"	0.25	(0.16 - 0.37)	NA	Mechanical seals, dual seals, purged seals, monitoring and maintenance programs, controlled degassing vents	A
		"	2.7	(1.7 - 4.0)			
	IV	"	0.046	(0.019 - 0.11)	NA		A
		"	0.50	(0.21 - 1.2)			
Compressor seals[d]	II	"	1.4	(0.66 - 2.9)	NA	Mechanical seals, dual seals, purged seals, monitoring and maintenance programs, controlled degassing vents	A
		"	15	(7.1 - 31)			
	V	"	0.11	(0.05 - 0.23)	NA		A
		"	1.2	(0.5 - 2.5)			
Process drains[d]	I	"	0.070	(0.023 - 0.20)	NA	Traps and covers	A
		"	0.76	(0.25 - 2.2)			
Pressure vessel relief valves (gas service)[d,f]	II	"	0.36	(0.10 - 1.3)	Negligible	Rupture disks upstream of relief valves and/or venting to a flare	A
		"	3.9	(1.1 - 14)			
Cooling towers	-	$lb/10^6$ gal cooling water	6		0.70	Minimization of hydrocarbon leaks into cooling water system. Monitoring of cooling water for hydrocarbons	D
		$kg/10^6$ liters cooling water	0.7		0.083		
		$lb/10^3$ bbl refinery feed[g]	10		1.2		
		$kg/10^3$ liters refinery feed	0.03		0.004		
Oil/water separators	-	$lb/10^3$ gal wastewater	5		0.2	Covered separators and/or vapor recovery Systems	D
		$kg/10^3$ liter waste water	0.6		0.024		
		$lb/10^3$ bbl refinery feed	200		10		
		$kg/10^3$ liters refinery feed	0.6		0.03		
Storage	See Section 4.3						
Loading	See Section 4.4						

[a]Data from References 2, 4, 12 and 13 except as noted. Overall, less than 1% by weight of the total VOC emissions are methane.
[b]NA = Not Available.
[b]The volatility and hydrogen content of the process streams have a substantial effect on the emission rate of some fugitive emission sources. The stream identification numerals and group names and descriptions are:

Stream Identification Numeral	Stream Name	Stream Group Description
I	All streams	All streams
II	Gas streams	Hydrocarbon gas/vapor at process conditions (containing less than 50% hydrogen, by volume)
III	Light liquid and gas/liquid streams	Liquid or gas/liquid stream with a vapor pressure greater than that of kerosene (> 0.1 psia @ 100°F or 689 Pa @ 38°C), based on the most volatile class present at > 20% by volume
IV	Heavy liquid streams	Liquid stream with a vapor pressure equal to or less than that of kerosene (≤ 0.1 psia @ 100°F or 689 Pa @ 38°C), based on the most volatile class present at > 20% by volume
V	Hydrogen streams	Gas streams containing more than 50% hydrogen by volume

[c]Numbers in parentheses are the upper and lower bounds of the 95% confidence interval for the emission factor.
[d]Data from Reference 17.
[e]The downstream side of these valves is open to the atmosphere. Emissions are through the valve seat of the closed valve.
[f]Emission factor for relief valves in gas service is for leakage, not for emissions caused by vessel pressure relief.
[g]Refinery rate is defined as the crude oil feed rate to the atmospheric distillation column.

caustic. The extracted distillate is then contacted with air to convert mercaptans to disulfides. After oxidation, the distillate is settled, inhibitors are added, and the distillate is sent to storage. Regeneration is accomplished by mixing caustic from the bottom of the extractor with air and then separating the disulfides and excess air.

The major emission problem is hydrocarbons from contact between the distillate product and air in the "air blowing" step. These emissions are related to equipment type and configuration, as well as to operating conditions and maintenance practices.[4]

9.1.2.10 Asphalt Blowing - The asphalt blowing process polymerizes asphaltic residual oils by oxidation, increasing their melting temperature and hardness to achieve an increased resistance to weathering. The oils, containing a large quantity of polycyclic aromatic compounds (asphaltic oils), are oxidized by blowing heated air through a heated batch mixture or, in continuous process, by passing hot air countercurrent to the oil flow. The reaction is exothermic, and quench steam is sometimes needed for temperature control. In some cases, ferric chloride or phosphorus pentoxide is used as a catalyst to increase the reaction rate and to impart special characteristics to the asphalt.

Air emissions from asphalt blowing are primarily hydrocarbon vapors vented with the blowing air. The quantities of emissions are small because of the prior removal of volatile hydrocarbons in the distillation units, but the emissions may contain hazardous polynuclear organics. Emission are 60 pounds per ton of asphalt.[13] Emissions from asphalt blowing can be controlled to negligible levels by vapor scrubbing, incineration, or both[4,13]

9.1.3 Fugitive Emissions and Controls

Fugitive emission sources are generally defined as volatile organic compound (VOC) emission sources not associated with a specific process but scattered throughout the refinery. Fugitive emission sources include valves of all types, flanges, pump and compressor seals, process drains, cooling towers, and oil/water separators. Fugitive VOC emissions are attributable to the evaporation of leaked or spilled petroleum liquids and gases. Normally, control of fugitive emissions involves minimizing leaks and spills through equipment changes, procedure changes, and improved monitoring, housekeeping and maintenance practices. Controlled and uncontrolled fugitive emission factors for the following sources are listed in Table 9.1-2.

- valves (pipeline, open ended, vessel relief)
- flanges
- seals (pump, compressor)
- process drains
- oil/water separators (wastewater treatment)
- storage
- transfer operations
- cooling towers

9.1.3.1 Valves, Flanges, Seals and Drains - For these sources, a very high correlation has been found between mass emission rates and the type of stream service in which the sources are employed. Except for compressed gases, streams are classified into one of three stream groups, (1) gas/vapor streams, (2) light liquid/two phase streams, and (3) kerosene and heavier liquid streams. Gases passing through compressors are classified as either hydrogen or hydrocarbon service. It is found that sources in gas/vapor stream service have higher emission rates than those in heavier stream service. This trend is especially pronounced for valves and pump seals. The size of sources like valves, flanges, pump seals, compressor seals, relief valves and process drains does not affect the leak rates.[17] The emission factors are independent of process unit or refinery throughput.

Emission factors are given for compressor seals in each of the two gas service classifications. Valves, because of their number and relatively high emission factor, are the major emission source among the source types. This conclusion is based on an analysis of a hypothetical refinery coupled with the emission rates. The total quantity of fugitive VOC emissions in a typical oil refinery with a capacity of 330,000 barrels (52,500 m^3) per day is estimated as 45,000 pounds (20.4 MT) per day. See Table 9.1-3.

9.1.3.2 Storage - All refineries have a feedstock and product storage area, termed a "tank farm", which provides surge storage capacity to assure smooth, uninterrupted refinery operations. Individual storage tank capacities range from less than 1000 barrels to more than 500,000 barrels (160 - 79,500 m^3). Storage tank designs, emissions and emission control technologies are discussed in detail in Section 4.3.

9.1.3.3 Transfer Operations - Although most refinery feedstocks and products are transported by pipeline, some are transported by trucks, rail cars and marine vessels. They are transferred to and from these transport vehicles in the refinery tank farm area by specialized pumps and piping systems. The emissions from transfer operations and applicable emission control technology are discussed in much greater detail in Section 4.4.

9.1.3.4 Wastewater Treatment Plant - All refineries employ some form of wastewater treatment so water effluents can safely be returned to the environment or reused in the refinery. The design of wastewater treatment plants is complicated by the diversity of refinery pollutants, including oil, phenols, sulfides, dissolved solids, and toxic chemicals. Although the wastewater treatment processes employed by refineries vary greatly, they generally include neutralizers, oil/water separators, settling chambers, clarifiers, dissolved air flotation systems, coagulators, aerated lagoons, and activated sludge ponds. Refinery water effluents are collected from various processing units and are conveyed through sewers and ditches to the wastewater treatment plant. Most of the wastewater treatment occurs in open ponds and tanks.

The main components of atmospheric emissions from wastewater treatment plants are fugitive VOC and dissolved gases that evaporate from the surfaces of wastewater residing in open process drains, wastewater separators, and wastewater ponds (Table 9.1-2). Treatment processes that involve extensive contact of wastewater and air, such as aeration ponds and dissolved air flotation, have an even greater potential for atmospheric emissions.

The control of wastewater treatment plant emissions involves covering wastewater systems where emission generation is greatest (such as covering American Petroleum Institute separators and settling basins) and removing dissolved gases from wastewater streams with sour water strippers and phenol recovery units prior to their contact with the atmosphere. These control techniques potentially can achieve greater than 90 percent reduction of wastewater system emissions.[13]

TABLE 9.1-3. FUGITIVE VOC EMISSIONS FROM AN OIL REFINERY[17]

Source	Number	VOC Emissions lb/day	VOC Emissions kg/day
Valves	11,500	6,800	3,084
Flanges	46,500	600	272
Pump Seals	350	1,300	590
Compressors	70	1,100	499
Relief Valves	100	500	227
Drains	650	1,000	454
Cooling Towers[a]	-	1,600	726
Oil/Water Separators (uncovered)[a]	-	32,100	14,558
TOTAL		45,000	20,408

[a]Emissions from the cooling towers and oil/water separators are based on limited data. EPA is currently involved in further research to provide better data on wastewater system fugitive emissions.

9.1.3.5 Cooling Towers - Cooling towers are used extensively in refinery cooling water systems to transfer waste heat from the cooling water to the atmosphere. The only refineries not employing cooling towers are those with once-through cooling. The increasing scarcity of large water supplies required for once-through cooling is contributing to the disappearance of that form of refinery cooling. In the cooling tower, warm cooling water returning from refinery processes is contacted with air by cascading through packing. Cooling water circulation rates for refineries commonly range from 0.3 to 3.0 gallons (1.1 - 11.0 liters) per minute per barrel per day of refinery capacity.[2,16]

Atmospheric emissions from the cooling tower consist of fugitive VOC and gases stripped from the cooling water as the air and water come into contact. These contaminants enter the cooling water system from

leaking heat exchangers and condensers. Although the predominant contaminant in cooling water is VOC, dissolved gases such as hydrogen sulfide and ammonia may also be found (Table 9.1-2).[2,4,17]

Control of cooling tower emissions is accomplished by reducing contamination of cooling water through the proper maintenance of heat exchangers and condensers. The effectiveness of cooling tower controls is highly variable, depending on refinery configuration and existing maintenance practices.[4]

References for Section 9.1

1. C. E. Burklin, et al., Revision of Emission Factors for Petroleum Refining, EPA-450/3-77-030, U.S. Environmental Protection Agency, Research Triangle Park, NC, October 1977.

2. Atmospheric Emissions from Petroleum Refineries: A Guide for Measurement and Control, PHS No. 763, Public Health Service, U.S. Department of Health, Education and Welfare, Washington, DC, 1960.

3. Background Information for Proposed New Source Standards: Asphalt Concrete Plants, Petroleum Refineries, Storage Vessels, Secondary Lead Smelters and Refineries, Brass or Bronze Ingot Production Plants, Iron and Steel Plants, Sewage Treatment Plants, APTD-1352a, U.S. Environmental Protection Agency, Research Triangle Park, NC, 1973.

4. John A. Danielson (ed.), Air Pollution Engineering Manual (2nd Ed.), AP-40, U.S. Environmental Protection Agency, Research Triangle Park, NC, 1973. Out of Print.

5. Ben G. Jones, "Refinery Improves Particulate Control", Oil and Gas Journal, 69(26):60-62, June 28, 1971.

6. "Impurities in Petroleum", Petreco Manual, Petrolite Corp., Long Beach, CA, 1958.

7. Control Techniques for Sulfur Oxide in Air Pollutants, AP-52, U.S. Environmental Protection Agency, Research Triangle Park, NC, January 1969.

8. H. N. Olson and K. E. Hutchinson, "How Feasible Are Giant, One-train Refineries?", Oil and Gas Journal, 70(1):39-43, January 3, 1972.

9. C. M. Urban and K. J. Springer, Study of Exhaust Emissions from Natural Gas Pipeline Compressor Engines, American Gas Association, Arlington, VA, February 1975.

10. H. E. Dietzmann and K. J. Springer, Exhaust Emissions from Piston and Gas Turbine Engines Used in Natural Gas Transmission, American Gas Association, Arlington, VA, January 1974.

11. M. G. Klett and J. B. Galeski, Flare Systems Study, EPA-600/2-76-079, U.S. Environmental Protection Agency, Research Triangle Park, NC, March 1976.

12. Evaporation Loss in the Petroleum Industry, Causes and Control, API Bulletin 2513, American Petroleum Institute, Washington, DC, 1959.

13. Hydrocarbon Emissions from Refineries, API Publication No. 928, American Petroleum Institute, Washington, DC, 1973.

14. R. A. Brown, et al., Systems Analysis Requirements for Nitrogen Oxide Control of Stationary Sources, EPA-650/2-74-091, U.S. Environmental Protection Agency, Research Triangle Park, NC, 1974.

15. R. P. Hangebrauck, et al., Sources of Polynuclear Hydrocarbons in the Atmosphere, 999-AP-33, Public Health Service, U.S. Department of Health, Education and Welfare, Washington, DC, 1967.

16. W. S. Crumlish, "Review of Thermal Pollution Problems, Standards, and Controls at the State Government Level", Presented at the Cooling Tower Institute Symposium, New Orleans, LA, January 30, 1966.

17. Assessment of Atmospheric Emissions from Petroleum Refining, EPA-600/2-80-075a through -075d, U.S. Environmental Protection Agency, Research Triangle Park, NC, 1980.

9.2 NATURAL GAS PROCESSING

9.2.1 General[1]

Natural gas from high-pressure wells is usually passed through field separators to remove hydrocarbon condensate and water at the well. Natural gasoline, butane, and propane are usually present in the gas, and gas processing plants are required for the recovery of these liquefiable constituents (see Figure 9.2-1). Natural gas is considered "sour" if hydrogen sulfide is present in amounts greater than 0.25 grain per 100 standard cubic feet. The hydrogen sulfide (H_2S) must be removed (called "sweetening" the gas) before the gas can be utilized. If H_2S is present, the gas is usually sweetened by absorption of the H_2S in an amine solution. Amine processes are used for over 95 percent of all gas sweetening in the United States. Processes such as carbonate processes, solid bed absorbents, and physical absorption methods are employed in the other sweetening plants. Emissions data for sweetening processes other than amine types are very meager.

The major emission sources in the natural gas processing industry are compressor engines and acid gas wastes from gas sweetening plants. Compressor engine emissions are discussed in section 3.3.2; therefore, only gas sweetening plant emissions are discussed here.

9.2.2 Process Description[2,3]

Many chemical processes are available for sweetening natural gas. However, at present, the most widely used method for H_2S removal or gas sweetening is the amine type process (also known as the Girdler process) in which various amine solutions are utilized for absorbing H_2S. The process is summarized in reaction 1 and illustrated in Figure 9.2-2.

$$2\ RNH_2 + H_2S \longrightarrow (RNH_3)_2S \qquad (1)$$

where: R = mono, di, or tri-ethanol

N = nitrogen

H = hydrogen

S = sulfur

The recovered hydrogen sulfide gas stream may be (1) vented, (2) flared in waste gas flares or modern smokeless flares, (3) incinerated, or (4) utilized for the production of elemental sulfur or other commercial products. If the recovered H_2S gas stream is not to be utilized as a feedstock for commercial applications, the gas is usually passed to a tail gas incinerator in which the H_2S is oxidized to sulfur dioxide and then passed to the atmosphere via a stack. For more details, the reader should consult Reference 8.

9.2.3 Emissions[4,5]

Emissions will only result from gas sweetening plants if the acid waste gas from the amine process is flared or incinerated. Most often, the acid waste gas is used as a feedstock in nearby sulfur recovery or sulfuric acid plants.

When flaring or incineration is practiced, the major pollutant of concern is sulfur dioxide. Most plants employ elevated smokeless flares or tail gas incinerators to ensure complete combustion of all waste gas constituents, including virtually 100 percent conversion of H_2S to SO_2. Little particulate, smoke, or hydrocarbons result from these devices, and because gas temperatures do not usually exceed 1200°F (650°C), significant quantities of nitrogen oxides are not formed. Emission factors for gas sweetening plants with smokeless flares or incinerators are presented in Table 9.2-1.

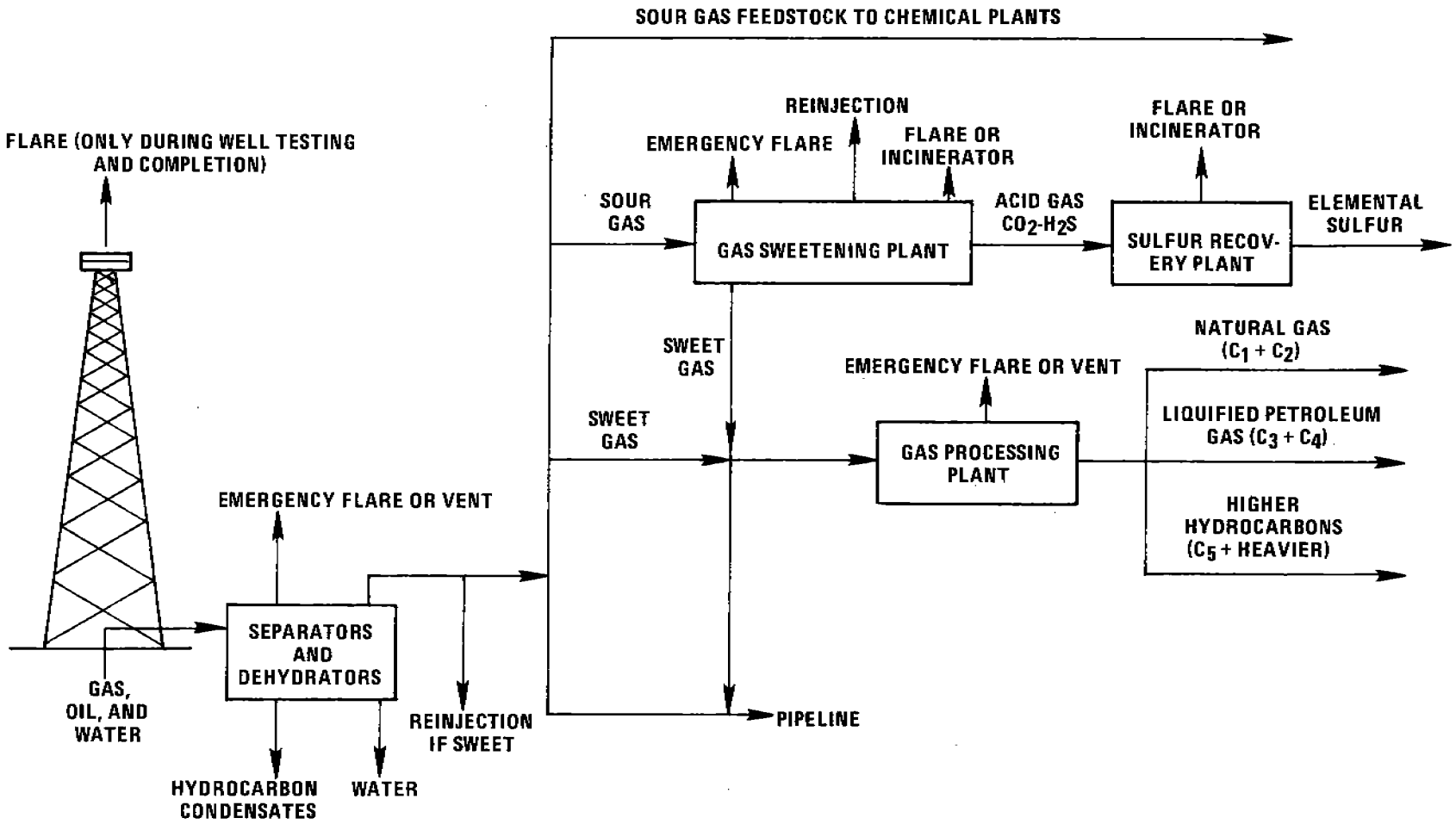

Figure 9.2-1. Generalized flow diagram of the natural gas industry.

Table 9.2-1. EMISSION FACTORS FOR GAS SWEETENING PLANTS[a]
EMISSION FACTOR RATING: SULFUR OXIDES: A
ALL OTHER FACTORS: C

Process[b]	Particulates	Sulfur oxides[c] (SO_2)	Carbon monoxide	Hydrocarbons	Nitrogen oxides
Amine					
lb/10^6 ft^3 gas processed	Neg.	1685 S^d	Neg.	Neg.	Neg.
kg/10^3 m^3 gas processed	Neg.	26.98 S^d	Neg.	Neg.	Neg.

[a]Emission factors are presented in this section only for smokeless flares and tail gas incinerators on the amine gas sweetening process. Too little emissions information exists to characterize emissions from older, less efficient waste gas flares on the amine process or from other, less common gas sweetening processes. Emission factors for various internal combustion engines utilized in a gas processing plant are given in section 3.3.2. Emission factors for sulfuric acid plants and sulfur recovery plants are given in sections 5.17 and 5.18, respectively.

[b]These factors represent emissions after smokeless flares (with fuel gas and steam injection) or tail gas incinerators and are based on References 2 and 4 through 7.

[c]These factors are based on the assumptions that virtually 100 percent of all H_2S in the acid gas waste is converted to SO_2 during flaring or incineration and that the sweetening process removes essentially 100 percent of the H_2S present in the feedstock.

[d]S is the H_2S content, on a mole percent basis, in the sour gas entering the gas sweetening plant. For example, if the H_2S content is 2 percent, the emission factor would be 1685 times 2, or 3370 lb SO_2 per million cubic feet of sour gas processed. If the H_2S mole percent is unknown, average values from Table 9.2-2 may be substituted.

Note: If H_2S contents are reported in grains per 100 scf or ppm, use the following factors to convert to mole percent:

0.01 mol % H_2S = 6.26 gr H_2S/100 scf at 60°F and 29.92 in. Hg

1 gr/100 scf = 16 ppm (by volume)

To convert to or from metric units, use the following factor:

0.044 gr/100 scf = 1 mg/Nm^3

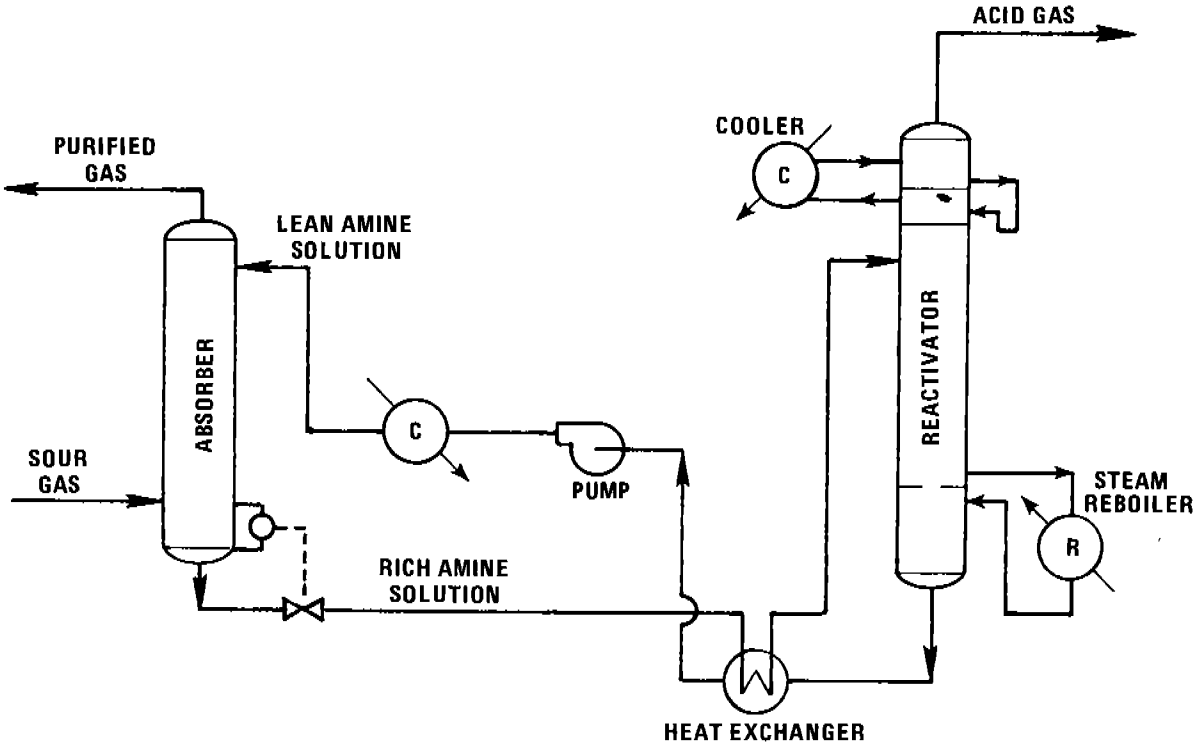

Figure 9.2-2. Flow diagram of the amine process for gas sweetening.

Table 9.2-2. AVERAGE HYDROGEN SULFIDE CONCENTRATIONS IN NATURAL GAS BY AIR QUALITY CONTROL REGION[a]

State	AQCR name	AQCR number	Average H_2S, mol %
Alabama	Mobile-Pensacola-Panama City - Southern Mississippi (Fla., Miss.)	5	3.30
Arizona	Four Corners (Colo., N.M., Utah)	14	0.71
Arkansas	Monroe-El Dorado (La.)	19	0.15
	Shreveport-Texarkana-Tyler (La., Okla., Texas)	22	0.55
California	Metropolitan Los Angeles	24	2.09
	San Joaquin Valley	31	0.89
	South Central Coast	32	3.66
	Southeast Desert	33	1.0
Colorado	Four Corners (Ariz., N.M., Utah)	14	0.71
	Metropolitan Denver	36	0.1
	Pawnee	37	0.49
	San Isabel	38	0.3
	Yampa	40	0.31
Florida	Mobile-Pensacola-Panama City - Southern Mississippi (Ala., Miss.)	5	3.30
Kansas	Northwest Kansas	97	0.005
	Southwest Kansas	100	0.02
Louisiana	Monroe-El Dorado (Ariz.)	19	0.15
	Shreveport-Texarkana-Tyler (Ariz., Okla., Texas)	22	0.55
Michigan	Upper Michigan	126	0.5
Mississippi	Mississippi Delta	134	0.68
	Mobile-Pensacola-Panama City - Southern Mississippi (Ala., Fla.)	5	3.30
Montana	Great Falls	141	3.93
	Miles City	143	0.4
New Mexico	Four Corners (Ariz., Colo., Utah)	14	0.71
	Pecos-Permian Basin	155	0.83
North Dakota	North Dakota	172	1.74[b]
Oklahoma	Northwestern Oklahoma	187	1.1
	Shreveport-Texarkana-Tyler (Ariz., La., Texas)	22	0.55
	Southeastern Oklahoma	188	0.3

Table 9.2-2 (continued). AVERAGE HYDROGEN SULFIDE CONCENTRATIONS IN NATURAL GAS BY AIR QUALITY CONTROL REGION[a]

State	AQCR name	AQCR number	Average H_2S, mol %
Texas	Abilene-Wichita Falls	210	0.055
	Amarillo-Lubbock	211	0.26
	Austin-Waco	212	0.57
	Corpus Christi-Victoria	214	0.59
	Metropolitan Dallas-Fort Worth	215	2.54
	Metropolitan San Antonio	217	1.41
	Midland-Odessa-San Angelo	218	0.63
	Shreveport-Texarkana-Tyler (Ariz., La., Okla.)	22	0.55
Utah	Four Corners (Ariz., Colo., N.M.)	14	0.71
Wyoming	Casper	241	1.262
	Wyoming (except Park, Bighorn and Washakie Counties)	243	2.34

[a]Reference 9.

[b]Sour gas only reported for Burke, Williams, and McKenzie Counties.

[c]Park, Bighorn, and Washakie Counties report gas with an average 23 mol % H_2S content.

Some plants still use older, less efficient waste gas flares. Because these flares usually burn at temperatures lower than necessary for complete combustion, some emissions of hydrocarbons and particulates as well as higher quantities of H_2S can occur. No data are available to estimate the magnitude of these emissions from waste gas flares.

Emissions from sweetening plants with adjacent commercial plants, such as sulfuric acid plants or sulfur recovery plants, are presented in sections 5.17 and 5.18, respectively. Emission factors for internal combustion engines used in gas processing plants are given in section 3.3.2.

Background material for this section was prepared for EPA by Ecology Audits, Inc.[8]

References for Section 9.2

1. Katz, D.L., D. Cornell, R. Kobayashi, F.H. Poettmann, J.A. Vary, J.R. Elenbaas, and C.F. Weinaug. Handbook of Natural Gas Engineering. New York, McGraw-Hill Book Company. 1959. 802 p.

2. Maddox, R.R. Gas and Liquid Sweetening. 2nd Ed. Campbell Petroleum Series, Norman, Oklahoma. 1974. 298 p.

3. Encyclopedia of Chemical Technology. Vol. 7. Kirk, R.E. and D.F. Othmer (eds.). New York, Interscience Encyclopedia, Inc. 1951.

4. Sulfur Compound Emissions of the Petroleum Production Industry. M.W. Kellogg Co., Houston, Texas. Prepared for Environmental Protection Agency, Research Triangle Park, N.C. under Contract No. 68-02-1308. Publication No. EPA-650/2-75-030. December 1974.

5. Unpublished stack test data for gas sweetening plants. Ecology Audits, Inc., Dallas, Texas. 1974.

6. Control Techniques for Hydrocarbon and Organic Solvent Emissions from Stationary Sources. U.S. DHEW, PHS, EHS, National Air Pollution Control Administration, Washington, D.C. Publication No. AP-68. March 1970. p. 3-1 and 4-5.

7. Control Techniques for Nitrogen Oxides from Stationary Sources. U.S. DHEW, PHS, EHS, National Air Pollution Control Administration, Washington, D.C. Publication No. AP-67. March 1970. p. 7-25 to 7-32.

8. Mullins, B.J. et al. Atmospheric Emissions Survey of the Sour Gas Processing Industry. Ecology Audits, Inc., Dallas, Texas. Prepared for Environmental Protection Agency, Research Triangle Park, N.C. under Contract No. 68-02-1865. Publication No. EPA-450/3-75-076. October 1975.

9. Federal Air Quality Control Regions. Environmental Protection Agency, Research Triangle Park, N.C. Publication No. AP-102. January 1972.

10. WOOD PRODUCTS INDUSTRY

Wood processing involves the conversion of raw wood to either pulp, pulpboard, or one of several types of wallboard including plywood, particleboard, or hardboard. This section presents emissions data for chemical wood pulping, for pulpboard and plywood manufacturing, and for woodworking operations. The burning of wood waste in boilers and conical burners is not included as it is discussed in Chapters 1 and 2 of this publication.

10.1 CHEMICAL WOOD PULPING

10.1.1 General[1]

Chemical wood pulping involves the extraction of cellulose from wood by dissolving the lignin that binds the cellulose fibers together. The principal processes used in chemical pulping are the kraft, sulfite, neutral sulfite semichemical (NSSC), dissolving, and soda; the first three of these display the greatest potential for causing air pollution. The kraft process accounts for about 65 percent of all pulp produced in the United States; the sulfite and NSSC processes, together, account for less than 20 percent of the total. The choice of pulping process is determined by the product being made, by the type of wood species available, and by economic considerations.

10.1.2 Kraft Pulping

10.1.2.1 Process Description[1,2]—The kraft process (see Figure 10.1.2-1) involves the cooking of wood chips under pressure in the presence of a cooking liquor in either a batch or a continuous digester. The cooking liquor, or "white liquor," consisting of an aqueous solution of sodium sulfide and sodium hydroxide, dissolves the lignin that binds the cellulose fibers together.

When cooking is completed, the contents of the digester are forced into the blow tank. Here the major portion of the spent cooking liquor, which contains the dissolved lignin, is drained, and the pulp enters the initial stage of washing. From the blow tank the pulp passes through the knotter where unreacted chunks of wood are removed. The pulp is then washed and, in some mills, bleached before being pressed and dried into the finished product.

It is economically necessary to recover both the inorganic cooking chemicals and the heat content of the spent "black liquor," which is separated from the cooked pulp. Recovery is accomplished by first concentrating the liquor to a level that will support combustion and then feeding it to a furnace where burning and chemical recovery take place.

Initial concentration of the weak black liquor, which contains about 15 percent solids, occurs in the multiple-effect evaporator. Here process steam is passed countercurrent to the liquor in a series of evaporator tubes that increase the solids content to 40 to 55 percent. Further concentration is then effected in the direct contact evaporator. This is generally a scrubbing device (a cyclonic or venturi scrubber or a cascade evaporator) in which hot combustion gases from the recovery furnace mix with the incoming black liquor to raise its solids content to 55 to 70 percent.

The black liquor concentrate is then sprayed into the recovery furnace where the organic content supports combustion. The inorganic compounds fall to the bottom of the furnace and are discharged to the smelt dissolving tank to form a solution called "green liquor." The green liquor is then conveyed to a causticizer where slaked lime (calcium hydroxide) is added to convert the solution back to white liquor, which can be reused in subsequent cooks. Residual lime sludge from the causticizer can be recycled after being dewatered and calcined in the hot lime kiln.

Many mills need more steam for process heating, for driving equipment, for providing electric power, etc., than can be provided by the recovery furnace alone. Thus, conventional industrial boilers that burn coal, oil, natural gas, and in some cases, bark and wood waste are commonly employed.

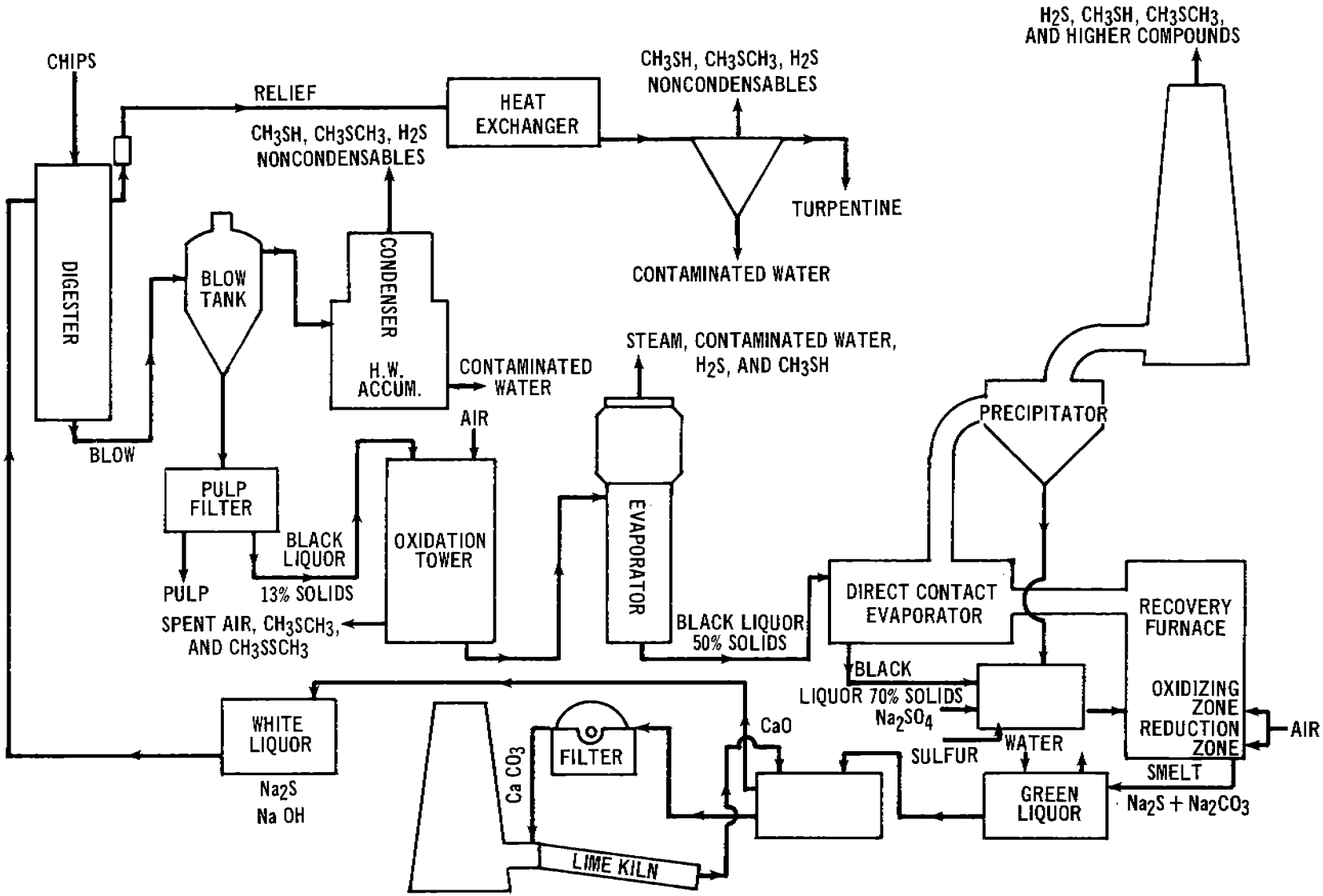

Figure 10.1.2-1. Typical kraft sulfate pulping and recovery process.

10.1.2.2. Emission and Controls[1-6]—Particulate emissions from the kraft process occur primarily from the recovery furnace, the lime kiln, and the smelt dissolving tank. These emissions consist mainly of sodium salts but include some calcium salts from the lime kiln. They are caused primarily by the carryover of solids plus the sublimation and condensation of the inorganic chemicals.

Particulate control is provided on recovery furnaces in a variety of ways. In mills where either a cyclonic scrubber or cascade evaporator serves as the direct contact evaporator, further control is necessary as these devices are generally only 20 to 50 percent efficient for particulates. Most often in these cases, an electrostatic precipitator is employed after the direct contact evaporator to provide an overall particulate control efficiency of 85 to $\geqslant$ 99 percent. In a few mills, however, a venturi scrubber is utilized as the direct contact evaporator and simultaneously provides 80 to 90 percent particulate control. In either case auxiliary scrubbers may be included after the precipitator or the venturi scrubber to provide additional control of particulates.

Particulate control on lime kilns is generally accomplished by scrubbers. Smelt dissolving tanks are commonly controlled by mesh pads but employ scrubbers when further control is needed.

The characteristic odor of the kraft mill is caused in large part by the emission of hydrogen sulfide. The major source is the direct contact evaporator in which the sodium sulfide in the black liquor reacts with the carbon dioxide in the furnace exhaust. The lime kiln can also be a potential source as a similar reaction occurs involving residual sodium sulfide in the lime mud. Lesser amounts of hydrogen sulfide are emitted with the noncondensible off-gasses from the digesters and multiple-effect evaporators.

The kraft-process odor also results from an assortment of organic sulfur compounds, all of which have extremely low odor thresholds. Methyl mercaptan and dimethyl sulfide are formed in reactions with the wood component lignin. Dimethyl disulfide is formed through the oxidation of mercaptan groups derived from the lignin. These compounds are emitted from many points within a mill; however, the main sources are the digester/blow tank systems and the direct contact evaporator.

Although odor control devices, per se, are not generally employed in kraft mills, control of reduced sulfur compounds can be accomplished by process modifications and by optimizing operating conditions. For example, black liquor oxidation systems, which oxidize sulfides into less reactive thiosulfates, can considerably reduce odorous sulfur emissions from the direct contact evaporator, although the vent gases from such systems become minor odor sources themselves. Noncondensible odorous gases vented from the digester/blow tank system and multiple-effect evaporators can be destroyed by thermal oxidation, usually by passing them through the lime kiln. Optimum operation of the recovery furnace, by avoiding overloading and by maintaining sufficient oxygen residual and turbulence, significantly reduces emissions of reduced sulfur compounds from this source. In addition, the use of fresh water instead of contaminated condensates in the scrubbers and pulp washers further reduces odorous emissions. The effect of any of these modifications on a given mill's emissions will vary considerably.

Several new mills have incorporated recovery systems that eliminate the conventional direct contact evaporators. In one system, preheated combustion air rather than flue gas provides direct contact evaporation. In the other, the multiple-effect evaporator system is extended to replace the direct contact evaporator altogether. In both of these systems, reduced sulfur emissions from the recovery furnace/direct contact evaporator reportedly can be reduced by more than 95 percent from conventional uncontrolled systems.

Sulfur dioxide emissions result mainly from oxidation of reduced sulfur compounds in the recovery furnace. It is reported that the direct contact evaporator absorbs 50 to 80 percent of these emissions; further scrubbing, if employed, can reduce them another 10 to 20 percent.

Potential sources of carbon monoxide emissions from the kraft process include the recovery furnace and lime kilns. The major cause of carbon monoxide emissions is furnace operation well above rated capacity, making it impossible to maintain oxidizing conditions.

Some nitrogen oxides are also emitted from the recovery furnace and lime kilns although the amounts are relatively small. Indications are that nitrogen oxides emissions from each of these sources are on the order of 1 pound per air-dried ton (0.5 kg/air-dried MT) of pulp produced.[5 6]

A major source of emissions in a kraft mill is the boiler for generating auxiliary steam and power. The fuels used are coal, oil, natural gas, or bark/wood waste. Emission factors for boilers are presented in Chapter 1.

Table 10.1.2-1 presents emission factors for a conventional kraft mill. The most widely used particulate controls devices are shown along with the odor reductions resulting from black liquor oxidation and incineration of noncondensible off-gases.

10.1.3 Acid Sulfite Pulping

10.1.3.1 Process Description[14] - The production of acid sulfite pulp proceeds similarly to kraft pulping except that different chemicals are used in the cooking liquor. In place of the caustic solution used to dissolve the lignin in the wood, sulfurous acid is employed. To buffer the cooking solution, a bisulfite of sodium, magnesium, calcium, or ammonium is used. A simplified flow diagram of a magnesium-base process is shown in Figure 10.1.3-1.

Digestion is carried out under high pressure and high temperature in either batch-mode or continuous digesters in the presence of a sulfurous acid-bisulfite cooking liquor. When cooking is completed, the digester is either discharged at high pressure into a blow pit or its contents are pumped out at a lower pressure into a dump tank. The spent sulfite liquor (also called red liquor) then drains through the bottom of the tank and is either treated and disposed, incinerated, or sent to a plant for recovery of heat and chemicals. The pulp is then washed and processed through screens and centrifuges for removal of knots, bundles of fibers, and other materials. It subsequently may be bleached, pressed, and dried in paper-making operations.

Because of the variety of bases employed in the cooking liquor, numerous schemes for heat and/or chemical recovery have evolved. In calcium-base systems, which are used mostly in older mills, chemical recovery is not practical, and the spent liquor is usually discarded or incinerated. In ammonium-base operations, heat can be recovered from the spent liquor through combustion, but the ammonium base is consumed in the process. In sodium- or magnesium-base operations heat, sulfur, and base recovery are all feasible.

If recovery is practiced, the spent weak red liquor (which contains more than half of the raw materials as dissolved organic solids) is concentrated in a multiple-effect evaporator and direct contact evaporator to 55 to 60 percent solids. Strong liquor is sprayed into a furnace and burned, producing steam for the digesters, evaporators, etc., and to meet the mills power requirements.

When magnesium base liquor is burned, a flue gas is produced from which magnesium oxide is recovered in a multiple cyclone as fine white powder. The magnesium oxide is then water-slaked and used as circulating liquor in a series of venturi scrubbers which are designed to absorb sulfur dioxide from the flue gas and form a bisulfite solution for use in the cook cycle. When sodium-base liquor is burned, the inorganic compounds are recovered as a molten smelt containing sodium sulfide and sodium carbonate. This smelt may be processed further and used to absorb sulfur dioxide from the flue gas and sulfur burner. In some sodium-base mills, however, the smelt may be sold to a nearby kraft mill as raw material for producing green liquor.

Table 10.1.2-1. EMISSION FACTORS FOR SULFATE PULPING[a]
(unit weights of air dried unbleached pulp)
EMISSION FACTOR RATING: A

Source	Type control	Particulates[b]		Sulfur dioxide (SO_2)[c]		Carbon monoxide[d]		Hydrogen sulfide($S^=$)[e]		RSH, RSR, RSSR($S^=$)[e,f]	
		lb/ton	kg/MT	lb/ton	kg/MT	lb/ton	kg/MT	lb/ton	kg/MT	lb/ton	kg/MT
Digester relief and blow tank	Untreated[g]	–	–	–	–	–	–	0.1	0.06	1.5	0.75
Brown stock washers	Untreated	–	–	0.01	0.005	–	–	0.02	0.01	0.2	0.1
Multiple effect evaporators	Untreated[g]	–	–	0.01	0.005	–	–	0.1	0.05	0.4	0.2
Recovery boiler and direct contact evaporator	Untreated[h]	150	75	5	2.5	2 - 60	1 - 30	12[i]	6[i]	1[i]	0.5[i]
	Venturi scrubber[j]	47	23.5	5	2.5	2 - 60	1 - 30	12[i]	6[i]	1[i]	0.5[i]
	Electrostatic precipitator	8	4	5	2.5	2 - 60	1 - 30	12[i]	6[i]	1[i]	0.5[i]
	Auxiliary scrubber	3 - 15[k]	1.5 - 7.5[k]	3	1.5	2 - 60	1 - 30	12[i]	6[i]	1[i]	0.5[i]
Smelt dissolving tank	Untreated	5	2.5	0.1	0.05	–	–	0.04	0.02	0.4	0.2
	Mesh pad	1	0.5	0.1	0.05	–	–	0.04	0.02	0.4	0.2
Lime kilns	Untreated	45	22.5	0.3	0.15	10	5	0.5	0.25	0.25	0.125
	Scrubber	3	1.5	0.2	0.1	10	5	0.5	0.25	0.25	0.125
Turpentine condenser	Untreated	–	–	–	–	–	–	0.01	0.005	0.5	0.25
Miscellaneous sources[l]	Untreated	–	–	–	–	–	–	–	–	0.5	0.25

[a]For more detailed data on specific types of mills, consult Reference 1.

[b]References 1, 7, 8.

[c]References 1, 7, 9, 10.

[d]References 6, 11. Use higher value for overloaded furnaces.

[e]References 1, 4, 7-10, 12, 13. These reduced sulfur compounds are usually expressed as sulfur.

[f]RSH-methyl mercaptan; RSR-dimethyl sulfide; RSSR-dimethyl disulfide.

[g]If the noncondensible gases from these sources are vented to the lime kiln, recovery furnace, or equivalent, the reduced sulfur compounds are destroyed..

[h]These factors apply when either a cyclonic scrubber or cascade evaporator is used for direct contact evaporation with no further controls.

[i]These reduced sulfur compounds (TRS) are typically reduced by 50 percent when black liquor oxidation is employed but can be cut by 90 to 99 percent when oxidation is complete and the recovery furnace is operated optimally.

[j]These factors apply when a venturi scrubber is used for direct contact evaporation with no further controls.

[k]Use 15(7.5) when the auxiliary scrubber follows a venturi scrubber and 3(1.5) when employed after an electrostatic precipitator.

[l]Includes knotter vents, brownstock seal tanks, etc. When black liquor oxidation is included, a factor of 0.6(0.3) should be used.

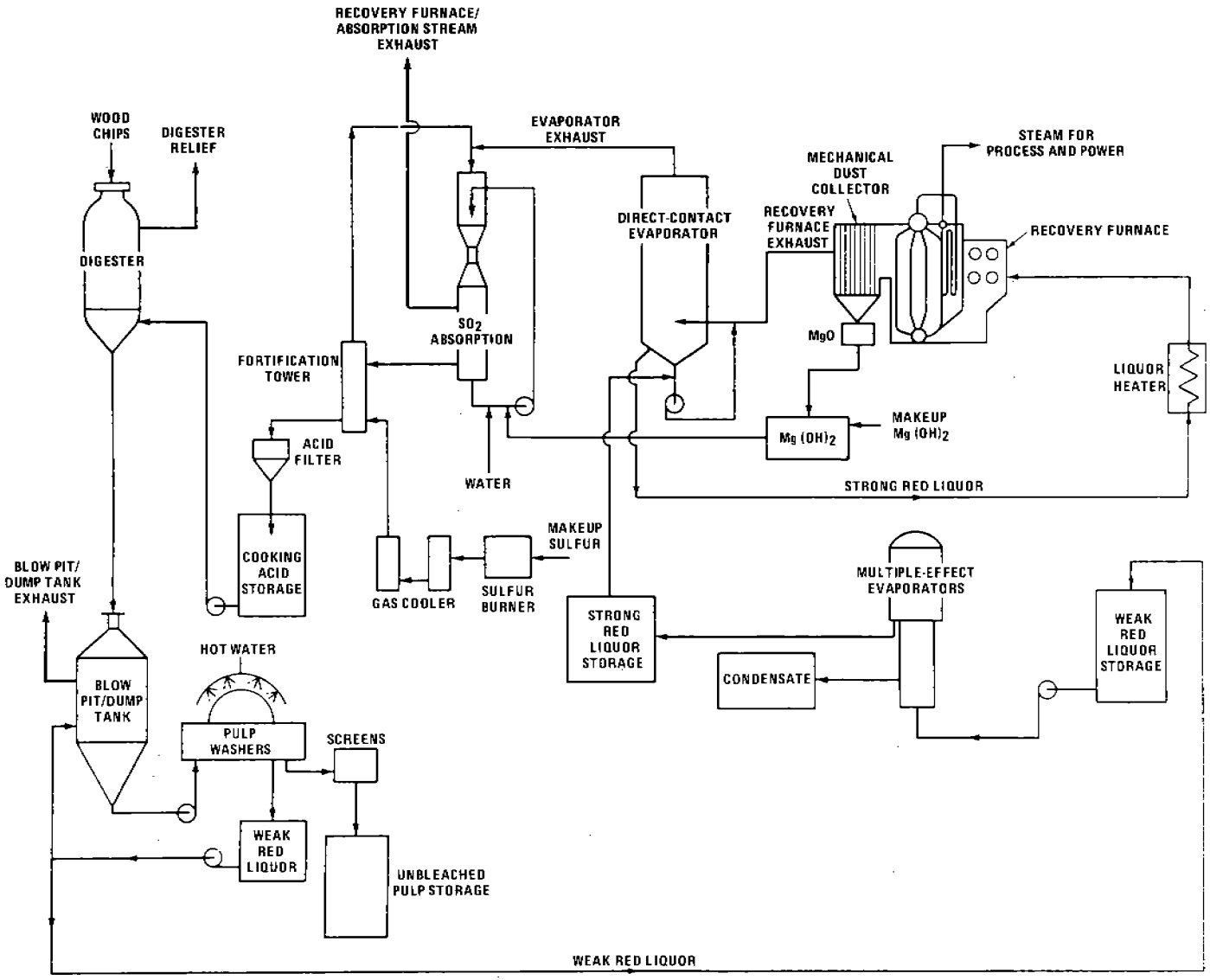

Figure 10.1.3-1. Simplified process flow diagram of magnesium-base process employing chemical and heat recovery.

If recovery is not practiced, an acid plant of sufficient capacity to fulfill the mill's total sulfite requirement is necessary. Normally, sulfur is burned in a rotary or spray burner. The gas produced is then cooled by heat exchangers plus a water spray and then absorbed in a variety of different scrubbers containing either limestone or a solution of the base chemical. Where recovery is practiced, fortification is accomplished similarly, although a much smaller amount of sulfur dioxide must be produced to make up for that lost in the process.

10.1.3.2 Emissions and Controls[14] - Sulfur dioxide is generally considered the major pollutant of concern from sulfite pulp mills. The characteristic "kraft" odor is not emitted because volatile reduced sulfur compounds are not products of the lignin-bisulfite reaction.

One of the major SO_2 sources is the digester and blow pit or dump tank system. Sulfur dioxide is present in the intermittent digester relief gases as well as in the gases given off at the end of the cook when the digester contents are discharged into the blow pit or dump tank. The quantity of sulfur oxide evolved and emitted to the atmosphere in these gas streams depends on the pH of the cooking liquor, the pressure at which the digester contents are discharged, and the effectiveness of the absorption systems employed for SO_2 recovery. Scrubbers can be installed that reduce SO_2 from this source by as much as 99 percent.

Another source of sulfur dioxide emissions is the recovery system. Since magnesium-, sodium-, and ammonium-base recovery systems all utilize absorption systems to recover SO_2 generated in the recovery furnace, acid fortification towers, multiple-effect evaporators, etc., the magnitude of SO_2 emissions depends on the desired efficiency of these systems. Generally, such absorption systems provide better than 95 percent sulfur recovery to minimize sulfur makeup needs.

The various pulp washing, screening, and cleaning operations are also potential sources of SO_2. These operations are numerous and may account for a significant fraction of a mill's SO_2 emissions if not controlled.

The only significant particulate source in the pulping and recovery process is the absorption system handling the recovery furnace exhaust. Less particulate is generated in ammonium-base systems than magnesium- or sodium-base systems as the combustion productions are mostly nitrogen, water vapor, and sulfur dioxide.

Other major sources of emissions in a sulfite pulp mill include the auxiliary power boilers. Emission factors for these boilers are presented in Chapter 1.

Emission factors for the various sulfite pulping operations are shown in Table 10.1.3-1.

10.1.4 Neutral Sulfite Semichemical (NSSC) Pulping

10.1.4.1 Process Description[1,7,15,16] - In this process, the wood chips are cooked in a neutral solution of sodium sulfite and sodium bicarbonate. The sulfite ion reacts with the lignin in the wood, and the sodium bicarbonate acts as a buffer to maintain a neutral solution. The major difference between this process (as well as all semichemical techniques) and the kraft and acid sulfite processes is that only a portion of the lignin is removed during the cook, after which the pulp is further reduced by mechanical disintegration. Because of this, yields as high as 60 to 80 percent can be achieved as opposed to 50 to 55 percent for other chemical processes.

Table 10.1.3-1. EMISSION FACTORS FOR SULFITE PULPING[a]

Source	Base	Control	Emission factor[b]				Emission factor rating
			Particulate		Sulfur Dioxide		
			lb/ADUT	kg/ADUMT	lb/ADUT	kg/ADUMT	
Digester/blow pit or dump tank[c]	All	None	Neg[d]	Neg	10-70	5-35	C
	MgO	Process change[e]	Neg	Neg	2-6	1-3	C
	MgO	Scrubber	Neg	Neg	1	0.5	B
	MgO	Process change and scrubber	Neg	Neg	0.2	0.1	B
	MgO	All exhaust vented through recovery system	Neg	Neg	0	0	A
	NH_3	Process change	Neg	Neg	25	12.5	D
	NH_3	Process change and scrubber	Neg	Neg	0.4	0.2	B
	Na	Process change and scrubber	Neg	Neg	2	1	C
	Ca	Unknown	Neg	Neg	67	33.5	C
Recovery system[f]	MgO	Multiclone and venturi scrubbers	2	1	9	4.5	A
	NH_3	Ammonia absorption and mist eliminator	0.7	0.35	7	3.5	B
	Na	Sodium carbonate scrubber	4	2	2	1	C
Acid plant[g]	NH_3	Scrubber	Neg	Neg	0.3	0.2	C
	Na	Unknown[h]	Neg	Neg	0.2	0.1	D
	Ca	Jenssen scrubber	Neg	Neg	8	4	C
Other sources[i]	All	None	Neg	Neg	12	6	D

[a]All emission factors represent long-term average emissions.

[b]Factors expressed in terms of lb (kg) of pollutant per air dried unbleached ton (MT) of pulp. All factors are based on data in Reference 14.

[c]These factors represent emissions that occur after the cook is completed and when the digester contents are discharged into the blow pit or dump tank. Some relief gases are vented from the digester during the cook cycle, but these are usually transferred to pressure accumulators, and the SO_2 therein is reabsorbed for use in the cooking liquor. These factors represent long-term average emissions; in some mills, the actual emissions will be intermittent and for short time periods.

[d]Negligible emissions.

[e]Process changes may include such measures as raising the pH of the cooking liquor, thereby lowering the free SO_2, relieving the pressure in the digester before the contents are discharged, and pumping out the digester contents instead of blowing them out.

[f]The recovery system at most mills is a closed system that includes the recovery furnace, direct contact evaporator, multiple-effect evaporator, acid fortification tower, and SO_2 absorption scrubbers. Generally, there will only be one emission point for the entire recovery system. These factors are long-term averages and include the high SO_2 emissions during the periodic purging of the recovery system.

[g]Acid plants are necessary in mills that have no or insufficient recovery systems.

[h]Control is practiced, but type of control is unknown.

[i]Includes miscellaneous pulping operations such as knotters, washers, screens, etc.

The NSSC process varies from mill to mill. Some mills dispose of their spent liquor, some mills recover the cooking chemicals, and some, which are operated in conjunction with kraft mills, mix their spent liquor with the kraft liquor as a source of makeup chemicals. When recovery is practiced, the steps involved parallel those of the sulfite process.

10.1.4.2 Emissions and Controls[1,7,15-16] – Particulate emissions are a potential problem only when recovery systems are employed. Mills that do practice recovery, but are not operated in conjunction with kraft operations often utilize fluidized bed reactors to burn their spent liquor. Because the flue gas contains sodium sulfate and sodium carbonate dust, efficient particulate collection may be included to facilitate chemical recovery.

A potential gaseous pollutant is sulfur dioxide. The absorbing towers, digester/blow tank system, and recovery furnace are the main sources of this pollutant with the amounts emitted dependent upon the capability of the scrubbing devices installed for control and recovery.

Hydrogen sulfide can also be emitted from NSSC mills using kraft-type recovery furnaces. The main potential source is the absorbing tower where a significant quantity of hydrogen sulfide is liberated as the cooking liquor is made. Other possible sources include the recovery furnace, depending on the operating conditions maintained, as well as the digester/blow tank system in mills where some green liquor is used in the cooking process. Where green liquor is used, it is also possible that significant quantities of mercaptans will be produced. Hydrogen sulfide emissions can be eliminated if burned to sulfur dioxide prior to entering the absorbing systems.

Because the NSSC process differs greatly from mill to mill, and because of the scarcity of adequate data, no emission factors are presented.

References for Section 10.1

1. Hendrickson, E. R. et al. Control of Atmospheric Emissions in the Wood Pulping Industry. Vol. I. U.S. Department of Health, Education and Welfare, PHS, National Air Pollution Control Administration, Washington, D.C. Final report under Contract No. CPA 22-69-18. March 15, 1970.

2. Britt, K. W. Handbook of Pulp and Paper Technology. New York, Reinhold Publishing Corporation, 1964. p. 166-200.

3. Hendrickson, E. R. et al. Control of Atmospheric Emissions in the Wood Pulping Industry. Vol. III. U.S. Department of Health, Education, and Welfare, PHS, National Air Pollution Control Administration, Washington, D.C. Final report under Contract No. CPA 22-69-18. March 15, 1970.

4. Walther, J. E. and H. R. Amberg. Odor Control in the Kraft Pulp Industry. Chem. Eng. Progress. *66*:73-80, March 1970.

5. Galeano, S. F. and K. M. Leopold. A Survey of Emissions of Nitrogen Oxides in the Pulp Mill. TAPPI. *56*(3):74-76, March 1973.

6. Source test data from the Office of Air Quality Planning and Standards, U.S. Environmental Protection Agency, Research Triangle Park, N.C. 1972.

7. Atmospheric Emissions from the Pulp and Paper Manufacturing Industry. U.S. Environmental Protection Agency, Research Triangle Park, N.C. Publication No. EPA-450/1-73-002. September 1973.

8. Blosser, R. O. and H. B. Cooper. Particulate Matter Reduction Trends in the Kraft Industry. NCASI paper, Corvallis, Oregon.

9. Padfield, D. H. Control of Odor from Recovery Units by Direct-Contact Evaporative Scrubbers with Oxidized Black-Liquor. TAPPI. *56*:83-86, January 1973.

10. Walther, J. E. and H. R. Amberg. Emission Control at the Kraft Recovery Furnaces. TAPPI. *55*(3):1185-1188, August 1972.

11. Control Techniques for Carbon Monoxide Emissions from Stationary Sources. U.S. Department of Health Education and Welfare, PHS, National Air Pollution Control Administration, Washington, D.C. Publication No. AP-65. March 1970. p. 4-24 and 4-25.

12. Blosser, R. O. et al. An Inventory of Miscellaneous Sources of Reduced Sulfur Emissions from the Kraft Pulping Process. (Presented at the 63rd APCA Meeting. St. Louis. June 14-18, 1970.)

13. Factors Affecting Emission of Odorous Reduced Sulfur Compounds from Miscellaneous Kraft Process Sources. NCASI Technical Bulletin No. 60. March 1972.

14. Background Document: Acid Sulfite Pulping. Prepared by Environmental Science and Engineering, Inc., Gainesville, Fla., for Environmental Protection Agency under Contract No. 68-02-1402, Task Order No. 14. Document No. EPA-450/3-77-005. Research Triangle Park, N.C. January 1977.

15. Benjamin, M. et al. A General Description of Commercial Wood Pulping and Bleaching Processes. J. Air Pollution Control Assoc. *19*(3):155-161, March 1969.

16. Galeano, S. F. and B. M. Dillard. Process Modifications for Air Pollution Control in Neutral Sulfite Semi-Chemical Mills. J. Air Pollution Control Assoc. *22*(3):195-199, March 1972.

10.2 PULPBOARD

10.2.1 General[1]

Pulpboard manufacturing involves the fabrication of fibrous boards from a pulp slurry. This includes two distinct types of product, paperboard and fiberboard. Paperboard is a general term that describes a sheet 0.012 inch (0.30 mm) or more in thickness made of fibrous material on a paper-forming machine.[2] Fiberboard, also referred to as particle board, is thicker than paperboard and is made somewhat differently.

There are two distinct phases in the conversion of wood to pulpboard: (1) the manufacture of pulp from raw wood and (2) the manufacture of pulpboard from the pulp. This section deals only with the latter as the former is covered under the section on the wood pulping industry.

10.2.2 Process Description[1]

In the manufacture of paperboard, the stock is sent through screens into the head box, from which it flows onto a moving screen. Approximately 15 percent of the water is removed by suction boxes located under the screen. Another 50 to 60 percent of the moisture content is removed in the drying section. The dried board then enters the calendar stack, which imparts the final surface to the product.

In the manufacture of fiberboard, the slurry that remains after pulping is washed and sent to the stock chests where sizing is added. The refined fiber from the stock chests is fed to the head box of the board machine. The stock is next fed onto the forming screens and sent to dryers, after which the dry product is finally cut and fabricated.

10.2.3 Emissions[1]

Emissions from the paperboard machine consist mainly of water vapor; little or no particulate matter is emitted from the dryers.[3-5] Particulates are emitted, however, from the fiberboard drying operation. Additional particulate emissions occur from the cutting and sanding operations. Emission factors for these operations are given in section 10.4. Emission factors for pulpboard manufacturing are shown in Table 10.2-1.

Table 10.2-1. PARTICULATE EMISSION FACTORS FOR PULPBOARD MANUFACTURING[a]
EMISSION FACTOR RATING: E

Type of product	Emissions	
	lb/ton	kg/MT
Paperboard	Neg	Neg
Fiberboard[b]	0.6	0.3

[a]Emission factors expressed as units per unit weight of finished product.
[b]Reference 1.

References for Section 10.2

1. Air Pollutant Emission Factors. Resources Research, Inc., Reston, Virginia. Prepared for National Air Pollution Control Administration, Washington, D.C. under Contract No. CPA-22-69-119. April 1970.

2. The Dictionary of Paper. New York, American Paper and Pulp Association, 1940.

3. Hough, G. W. and L. J. Gross. Air Emission Control in a Modern Pulp and Paper Mill. Amer. Paper Industry. *51*:36, February 1969.

4. Pollution Control Progress. J. Air Pollution Control Assoc. *17*:410, June 1967.

5. Private communication between I. Gellman and the National Council of the Paper Industry for Clean Air and Stream Improvement. New York, October 28, 1969.

10.3 PLYWOOD VENEER AND LAYOUT OPERATIONS

10.3.1 General[1-3]

Plywood is a building material consisting of veneers (thin wood layers or plies) bonded with an adhesive. The outer layers (faces) surround a core which is usually lumber, veneer or particle board. Plywood uses are many, including wall siding, sheathing, roof decking, concrete formboards, floors, and containers. Most plywood is made from Douglas Fir or other softwoods, and the majority of plants are in the Pacific Northwest. Hardwood veneers make up only a very small portion of total production.

In the manufacture of plywood, logs are sawed to the desired length, debarked and peeled into veneers of uniform thickness. Veneer thicknesses of less than one half inch or one centimeter are common. These veneers are then transported to veneer dryers with one or more decks, to reduce their moisture content. Dryer temperatures are held between about 300 and 400°F (150 - 200°C). After drying, the plies go through the veneer layout operation, where the veneers are sorted, patched and assembled in perpendicular layers, and a thermosetting resin adhesive applied. The veneer assembly is then transferred to a hot press where, under pressure and steam heat, the product is formed. Subsequently, all that remains is trimming, face sanding, and possibly some finishing treatment to enhance the usefulness of the product. Plywood veneer and layout operations are shown in Figure 10.3-1.

10.3.2 Emissions and Controls[2-8]

Emissions from the manufacture of plywood include particulate matter and organic compounds. The main source of emissions is the veneer dryer, with other sources producing negligible amounts of organic compound emissions or fugitive emissions. The log steaming and veneer drying operations produce combustion products, and these emissions depend entirely on the type of fuel and equipment used.

Uncontrolled fugitive particulate matter, in the form of sawdust and other small wood particles, comes primarily from the plywood cutting and sanding operations. To be considered additional sources of fugitive particulate emissions are log debarking, log sawing and sawdust handling. The dust that escapes into the air from sanding, sawing and other woodworking operations may be controlled by collection in an exhaust system and transport through duct work to a sized cyclone. Section 10.4 discusses emissions from such woodworking waste collection operations. Estimates of uncontrolled particulate emission factors for log debarking and sawing, sawdust pile handling, and plywood sanding and cutting are given in Table 10.3-1. From the veneer dryer, and at stack temperatures, the only particulate emissions are small amounts of wood fiber particles in concentrations of less than 0.002 grams per dry standard cubic foot.

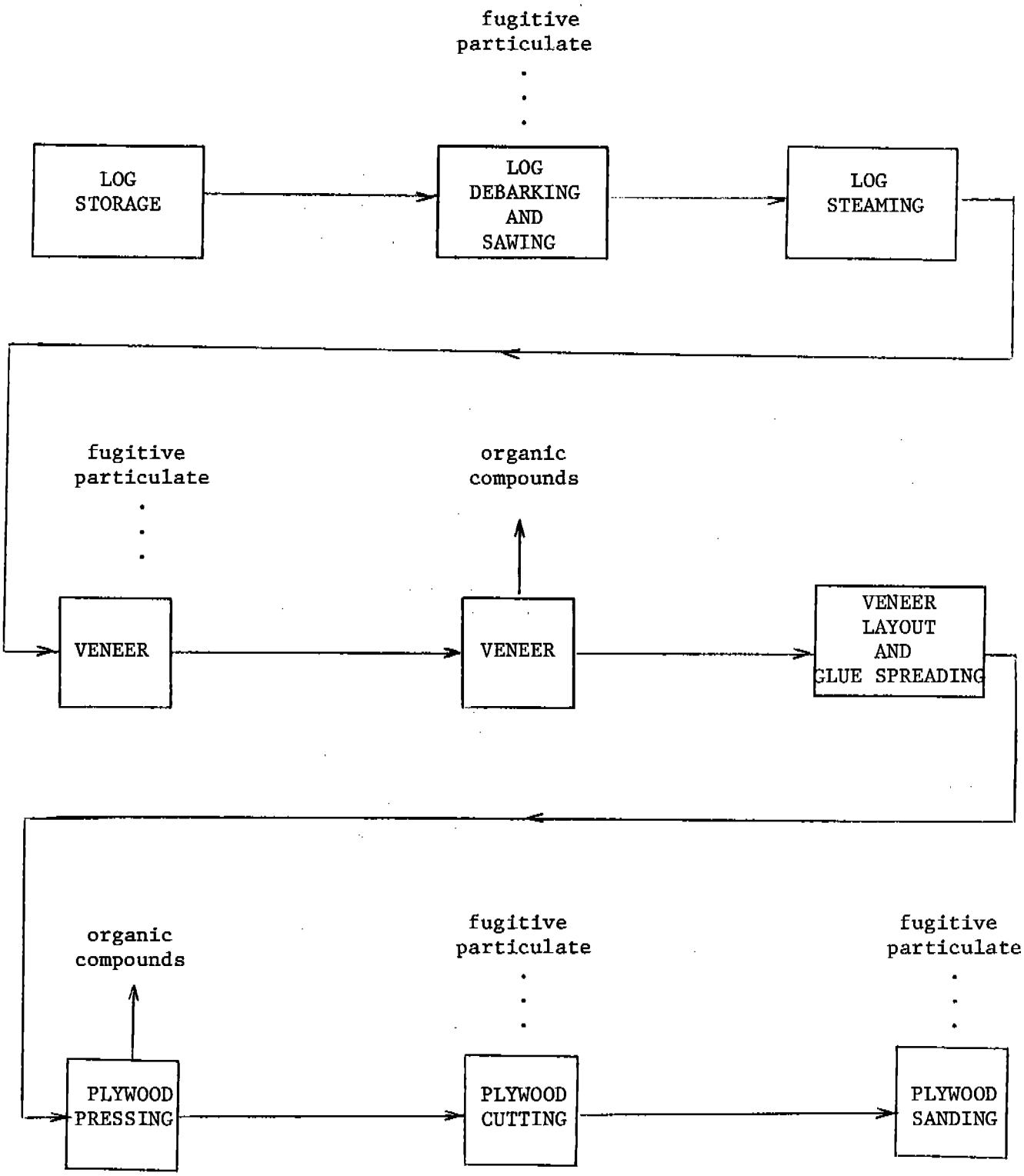

Figure 10.3-1. Plywood veneer and layout operations.[4,5]

Table 10.3-1. UNCONTROLLED FUGITIVE PARTICULATE EMISSION FACTORS FOR PLYWOOD VENEER AND LAYOUT OPERATONS

EMISSION FACTOR RATING: E

Source	Particulates	
Log debarking[a]	0.024 lb/ton	0.012 kg/MT
Log sawing[a]	0.350 lb/ton	0.175 kg/MT
Sawdust handling[b]	1.0 lb/ton	0.5 kg/MT
Veneer lathing[c]	NA	NA
Plywood cutting and sanding[d]	0.1 lb/ft^2	0.05 kg/m^2

[a]Reference 7. Emission factors are expressed as units per unit weight of logs processed.
[b]Reference 7. Emission factors are expressed as units per unit weight of sawdust handled, including sawdust pile loading, unloading and storage.
[c]Estimates not available.
[d]Reference 5. Emission factors are expressed as units per surface area of plywood produced. These factors are expressed as representative values for estimated values ranging from 0.066 to 0.132 lb/ft^2 (0.322 to 0.644 kg/m^2).

The major pollutants emitted from veneer dryers are organic compounds. The quantity and type of organics emitted vary, depending on the wood species and on the dryer type and its method of operation. There are two discernable fractions which are released, condensibles and volatiles. The condensible organic compounds consist largely of wood resins, resin acids and wood sugars, which cool outside the stack to temperatures below 70°F (21°C) and combine with water vapor to form a blue haze, a water plume or both. This blue haze may be eliminated by condensing the organic vapors in a finned tube matrix heat exhanger condenser. The other fraction, volatile organic compounds, is comprised of terpenes and natural gas components (such as unburned methane), the latter occurring only when gas fired dryers are used. The amounts of organic compounds released because of adhesive use during the plywood pressing operation are negligible. Uncontrolled organic process emission factors are given in Table 10.3-2.

Table 10.3-2. UNCONTROLLED ORGANIC COMPOUND PROCESS EMISSION FACTORS FOR PLYWOOD VENEER DRYERS[a]

EMISSION FACTOR RATING: B

Species	Volatile Organic Compounds		Condensible Organic Compounds	
	$lb/10^4\ ft^2$	$kg/10^4\ m^2$	$lb/10^4\ ft^2$	$kg/10^4\ m^2$
Douglas Fir				
sapwood				
steam fired	0.45	2.3	4.64	23.8
gas fired	7.53	38.6	2.37	12.1
heartwood	1.30	6.7	3.18	16.3
Larch	0.19	1.0	4.14	21.2
Southern pine	2.94	15.1	3.70	18.9
Other[b]	0.03-3.00	0.15-15.4	0.5-8.00	2.56-41.0

[a]Reference 2. Emission factors are expressed in pounds of pollutant per 10,000 square feet of 3/8 inch thick veneer dried, and kilograms of pollutant per 10,000 square meters of 1 centimeter thick veneer dried. All dryers are steam fired unless otherwise specified.

[b]These ranges of factors represent results from one source test for each of the following species (in order from least to greatest emissions): Western Fir, Hemlock, Spruce, Western Pine and Ponderosa Pine.

References for Section 10.3

1. C.B. Hemming, "Plywood", Kirk-Othmer Encyclopedia of Chemical Technology, Second Edition, Volume 15, John Wiley & Sons, Inc., New York, NY, 1968, pp. 896-907.

2. F. L. Monroe, et al., Investigation of Emissions from Plywood Veneer Dryers, Washington State University, Pullman, WA, February 1972.

3. Theodore Baumeister, ed., "Plywood", Standard Handbook for Mechanical Engineers, Seventh Edition, McGraw-Hill, New York, NY, 1967, pp. 6-162 - 6-169.

4. Allen Mick and Dean McCargar, Air Pollution Problems in Plywood, Particleboard, and Hardboard Mills in the Mid-Willamette Valley, Mid-Willamette Valley Air Pollution Authority, Salem, OR, March 24, 1969.

5. Controlled and Uncontrolled Emission Rates and Applicable Limitations for Eighty Processes, Second Printing, EPA-340/1-78-004, U.S. Environmental Protection Agency, Research Triangle Park, NC, April 1978, pp. X-1 - X-6.

6. John A. Danielson, ed., Air Pollution Engineering Manual, AP-40, Second Edition, U.S. Environmental Protection Agency, Research Triangle Park, NC, May 1973, pp. 372-374.

7. Assessment of Fugitive Particulate Emission Factors for Industrial Processes, EPA-450/3-78-107, U.S. Environmental Protection Agency, Research Triangle Park, NC, September 1978.

8. C. Ted Van Decar, "Plywood Veneer Dryer Control Device", Journal of the Air Pollution Control Association, 22:968, December 1972.

10.4 WOODWORKING WASTE COLLECTION OPERATIONS

10.4.1 General[1-5]

Woodworking, as defined in this section, includes any operation that involves the generation of small wood waste particles (shavings, sanderdust, sawdust, etc.) by any kind of mechanical manipulation of wood, bark, or wood byproducts. Common woodworking operations include sawing, planing, chipping, shaping, moulding, hogging, lathing, and sanding. Woodworking operations are found in numerous industries, such as sawmills, plywood, particleboard, and hardboard plants, and furniture manufacturing plants.

Most plants engaged in woodworking employ pneumatic transfer systems to remove the generated wood waste from the immediate proximity of each woodworking operation. These systems are necessary as a housekeeping measure to eliminate the vast quantity of waste material that would otherwise accumulate. They are also a convenient means of transporting the waste material to common collection points for ultimate disposal. Large diameter cyclones have historically been the primary means of separating the waste material from the airstreams in the pneumatic transfer systems, although baghouses have recently been installed in some plants for this purpose.

The waste material collected in the cyclones or baghouses may be burned in wood waste boilers, utilized in the manufacture of other products (such as pulp or particleboard), or incinerated in conical (teepee/wigwam) burners. The latter practice is declining with the advent of more stringent air pollution control regulations and because of the economic attractiveness of utilizing wood waste as a resource.

10.4.2 Emissions[1-6]

The only pollutant of concern in woodworking waste collection operations is particulate matter. The major emission points are the cyclones utilized in the pneumatic transfer systems. The quantity of particulate emissions from a given cyclone will depend on the dimensions of the cyclone, the velocity of the airstream, and the nature of the operation generating the waste. Typical large diameter cyclones found in the industry will only effectively collect particles greater than 40 micrometers in diameter. Baghouses, when employed, collect essentially all of the waste material in the airstream. The wastes from numerous pieces of equipment often feed into the same cyclone, and it is common for the material collected in one or several cyclones to be conveyed to another cyclone. It is also possible for portions of the waste generated by a single operation to be directed to different cyclones.

Because of this complexity, it is useful when evaluating emissions from a given facility to consider the waste handling cyclones as air pollution sources instead of the various woodworking operations that actually generate the particulate matter. Emission factors for typical large diameter cyclones utilized for waste collection in woodworking operations are given in Table 10.4-1.

Emission factors for wood waste boilers, conical burners, and various drying operations—often found in facilities employing woodworking operations—are given in Sections 1.6, 2.3, 10.2, and 10.3.

Table 10.4.1. PARTICULATE EMISSION FACTORS FOR LARGE DIAMETER CYCLONES IN WOODWORKING WASTE COLLECTION SYSTEMS[a]

EMISSION FACTOR RATING: D

Types of waste handled	Particulate emissions[b,c]			
	gr/scf	g/Nm^3	lb/hr	kg/hr
Sanderdust[d]	0.055 (0.005-0.16)	0.126 (0.0114-0.37)	5 (0.2-30.0)	2.3 (0.09-13.6)
Other[e]	0.03 (0.001-0.16)	0.07 (0.002-0.37)	2 (0.03-24.0)	0.91 (0.014-10.9)

[a]Typical waste collection cyclones range from 4 to 16 feet (1.2 to 4.9 meters) in diameter and employ airflows ranging from 2,000 to 26,000 standard cubic feet (57 to 740 normal cubic meters) per minute. Note: if baghouses are used for waste collection, particulate emissions will be negligible.

[b]References 1 through 3.

[c]Observed value ranges are in parentheses.

[d]These factors should be used whenever waste from sanding operations is fed directly into the cyclone in question.

[e]These factors should be used for cyclones handling waste from all operations other than sanding. This includes cyclones that handle waste (including sanderdust) already collected by another cyclone.

References for Section 10.4

1. Source test data supplied by Robert Harris, Oregon Department of Environmental Quality, Portland, OR, September 1975.

2. J.W. Walton, *et al.*, "Air Pollution in the Woodworking Industry", Presented at the 68th Annual Meeting of the Air Pollution Control Association, Boston, MA, June 1975.

3. J.D. Patton and J.W. Walton, "Applying the High Volume Stack Sampler To Measure Emissions from Cotton Gins, Woodworking Operations, and Feed and Grain Mills", Presented at 3rd Annual Industrial Air Pollution Control Conference, Knoxville, TN, March 29-30, 1973.

4. C.F. Sexton, "Control of Atmospheric Emissions from the Manufacturing of Furniture", Presented at 2nd Annual Industrial Air Pollution Control Conference, Knoxville, TN, April 20-21, 1972.

5. A. Mick and D. McCargar, "Air Pollution Problems in Plywood, Particleboard, and Hardboard Mills in the Mid-Willamette Valley", Mid-Williamette Valley Air Pollution Authority, Salem, OR, March 24, 1969.

6. Information supplied by the North Carolina Department of Natural and Economic Resources, Raleigh, NC, December 1975.

10.4.3 Fugitive Emission Factors

Since most woodworking operations control emissions out of necessity, fugitive emissions are seldom a problem. However, the wood waste storage bins are a common source of fugitive emissions. Table 10.4-2 shows these emission sources and their corresponding emission factors.

Information concerning size characteristics is very limited. Data collected in a western red cedar furniture factory equipped with exhaust ventilation on most woodworking equipment showed most suspended particles in the working environment to be less than 2 μm in diameter.[7]

Table 10.4-2. POTENTIAL UNCONTROLLED FUGITIVE PARTICULATE EMISSION FACTORS FOR WOODWORKING OPERATIONS

EMISSION FACTOR RATING: C

Type of operation	Particulates[a]	
	lb/ton	kg/MT
Wood waste storage bin vent[b]	1.0	0.5
Wood waste storage bin loadout[b]	2.0	1.0

[a]Factors expressed as units per unit weight of wood waste handled.
[b]Engineering judgment based on plant visits.

Additional Reference for Section 10.4

7. Lester V. Cralley, *et al.*, *Industrial Enivronmental Health, the Worker and the Community*, Academic Press, New York and London, 1972.

MISCELLANEOUS SOURCES

This chapter contains emission factor information on those source categories that differ substantially from—and hence cannot be grouped with—the other "stationary" sources discussed in this publication. These "miscellaneous" emitters (both natural and man-made) are almost exclusively "area sources", that is, their pollutant generating process(es) are dispersed over large land areas (for example, hundreds of acres, as in the case of forest wildfires), as opposed to sources emitting from one or more stacks with a total emitting area of only several square feet. Another characteristic these sources have in common is the nonapplicability, in most cases, of conventional control methods, such as wet/dry equipment, fuel switching, process changes, etc. Instead, control of these emissions, where possible at all, may include such techniques as modification of agricultural burning practices, paving with asphalt or concrete, or stabilization of dirt roads. Finally, miscellaneous sources generally emit pollutants intermittently, when compared with most stationary point sources. For example, a forest fire may emit large quantities of particulates and carbon monoxide for several hours or even days, but when measured against the emissions of a continuous emitter (such as a sulfuric acid plant) over a long period of time (1 year, for example), its emissions may seem relatively minor. Effects on air quality may also be of relatively short-term duration.

11.1 FOREST WILDFIRES

11.1.1 General [1]

A forest "wildfire" is a large-scale natural combustion process that consumes various ages, sizes, and types of botanical specimens growing outdoors in a defined geographical area. Consequently, wildfires are potential sources of large amounts of air pollutants that should be considered when trying to relate emissions to air quality.

The size and intensity (or even the occurrence) of a wildfire is directly dependent on such variables as the local meteorological conditions, the species of trees and their moisture content, and the weight of consumable fuel per acre (fuel loading). Once a fire begins, the dry combustible material (usually small undergrowth and forest floor litter) is consumed first, and if the energy release is large and of sufficient duration, the drying of green, live material occurs with subsequent burning of this material as well as the larger dry material. Under proper environmental and fuel conditions, this process may initiate a chain reaction that results in a widespread conflagration.

The complete combustion of a forest fuel will require a heat flux (temperature gradient), an adequate oxygen supply, and sufficient burning time. The size and quantity of forest fuels, the meteorological conditions, and the topographic features interact to modify and change the burning behavior as the fire spreads; thus, the wildfire will attain different degrees of combustion during its lifetime.

The importance of both fuel type and fuel loading on the fire process cannot be overemphasized. To meet the pressing need for this kind of information, the U.S. Forest Service is developing a country-wide fuel identification system (model) that will provide estimates of fuel loading by tree-size class, in tons per acre. Further, the environmental parameters of wind, slope, and expected moisture changes have been superimposed on this fuel model and incorporated into a National Fire Danger Rating System (NFDR). This system considers five classes of fuel (three dead and two living), the components of which are selected on the basis of combustibility, response to moisture (for the dead fuels), and whether the living fuels are herbaceous (plants) or ligneous (trees).

Most fuel loading figures are based on values for "available fuel" (combustible material that will be consumed in a wildfire under specific weather conditions). Available fuel values must not be confused with corresponding values for either "total fuel" (all the combustible material that would burn under the most severe weather and burning

conditions) or "potential fuel" (the larger woody material that remains even after an extremely high intensity wildfire). It must be emphasized, however, that the various methods of fuel identification are of value only when they are related to the existing fuel quantity, the quantity consumed by the fire, and the geographic area and conditions under which the fire occurs.

For the sake of conformity (and convenience), estimated fuel loadings were obtained for the vegetation in the National Forest Regions and the wildlife areas established by the U.S. Forest Service, and are presented in Table 11.1-1. Figure 11.1-1 illustrates these areas and regions.

Table 11.1-1. SUMMARY OF ESTIMATED FUEL CONSUMED BY FOREST FIRES[a]

Area and Region[b]		Estimated average fuel loading	
		MT/hectare	ton/acre
Rocky Mountain group		83	37
Region 1:	Northern	135	60
Region 2:	Rocky Mountain	67	30
Region 3:	Southwestern	22	10
Region 4:	Intermountain	40	8
Pacific group		43	19
Region 5:	California	40	18
Region 6:	Pacific Northwest	135	60
Region 10:	Alaska	36	16
	Coastal	135	60
	Interior	25	11
Southern group		20	9
Region 8:	Southern	20	9
Eastern group		25	11
North Central group		25	11
Region 9:	Conifers	22	10
	Hardwoods	27	12

[a]Reference 1.

[b]See Figure 11.1-1 for regional boundaries.

11.1.2 Emissions and Controls[1]

It has been hypothesized (but not *proven)* that the nature and amounts of air pollutant emissions are directly related to the intensity and direction (relative to the wind) of the wildfire, and indirectly related to the rate at which the fire spreads. The factors that affect the rate of spread are (1) weather (wind velocity, ambient temperature, and relative humidity), (2) fuels (fuel type, fuel bed array, moisture content, and fuel size), and (3) topography (slope and profile). However, logistical problems (such as size of the burning area) and difficulties in safely situating personnel and equipment close to the fire have prevented the collection of any reliable experimental emission data on actual wildfires, so that it is presently impossible to verify or disprove the above-stated hypothesis. Therefore, until such measurements are made, the only available information is that

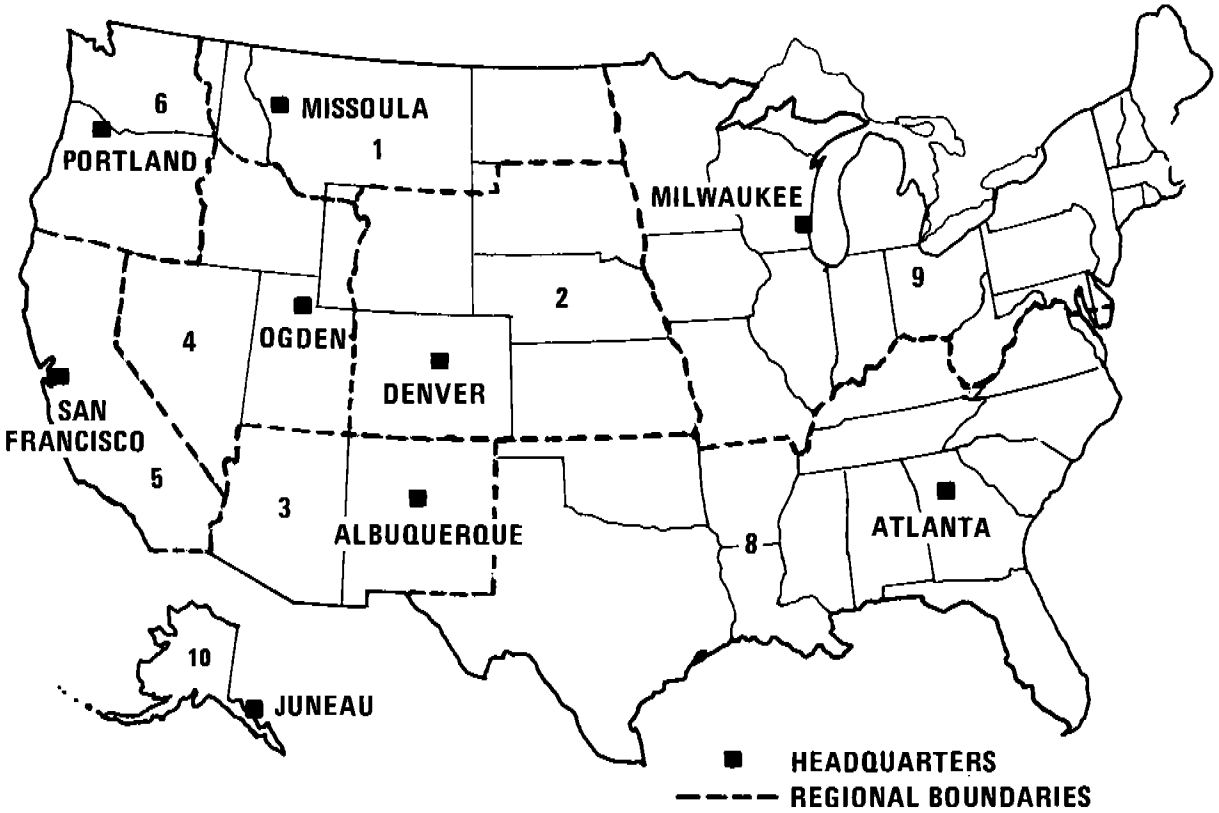

Figure 11.1-1. Forest areas and U.S. Forest Service Regions.

obtained from burning experiments in the laboratory. These data, in the forms of both emissions and emission factors, are contained in Table 11.1-2. It must be emphasized that the factors presented here are adequate for laboratory-scale emissions estimates, but that substantial errors may result if they are used to calculate actual wildfire emissions.

The emissions and emission factors displayed in Table 11.1-2 are calculated using the following formulas:

$$F_i = P_i L \quad (1)$$

$$E_i = F_i A = P_i L A \quad (2)$$

where: F_i = Emission factor (mass of pollutant/unit area of forest consumed)

P_i = Yield for pollutant "i" (mass of pollutant/unit mass of forest fuel consumed)

= 8.5 kg/MT (17 lb/ton) for total particulate

= 70 kg/MT (140 lb/ton) for carbon monoxide

= 12 kg/MT (24 lb/ton) for total hydrocarbon (as CH_4)

Table 11.1-2. SUMMARY OF EMISSIONS AND EMISSION FACTORS FOR FOREST WILDFIRES[a]
EMISSION FACTOR RATING: D

Geographic area[b]	Area consumed by wildfire, hectares	Wildfire fuel consumption, MT/hectare	Emission factors, kg/hectare				Emissions, MT			
			Particulate	Carbon monoxide	Hydrocarbons	Nitrogen oxides	Particulate	Carbon monoxide	Hydrocarbons	Nitrogen oxides
Rocky Mountain group	313,397	83	706	5,810	996	166	220,907	1,819,237	311,869	51,978
Northern, Region 1	142,276	135	1,144	9,420	1,620	269	162,628	1,339,283	229,592	38,265
Rocky Mountain, Region 2	65,882	67	572	4,710	808	135	37,654	310,086	53,157	8,860
Southwestern, Region 3	83,765	22	191	1,570	269	45	15,957	131,417	22,533	3,735
Intermountain, Region 4	21,475	40	153	1,260	215	36	3,273	26,953	4,620	770
Pacific group	469,906	43	362	2,980	512	85	170,090	1,400,738	240,126	40,021
California, Region 5	18,997	40	343	2,830	485	81	6,514	53,645	9,196	1,533
Alaska, Region 10	423,530	36	305	2,510	431	72	129,098	1,063,154	182,255	30,376
Pacific N.W. Region 6	27,380	135	1,144	9,420	1,620	269	31,296	257,738	44,183	7,363
Southern group	806,289	20	172	1,410	242	40	138,244	1,138,484	195,168	32,528
Southern, Region 8	806,289	20	172	1,410	242	40	138,244	1,138,484	195,168	32,528
North Central group	94,191	25	210	1,730	296	49	19,739	162,555	27,867	4,644
Eastern, Region 9 (Both groups are in Region 9)	141,238	25	210	1,730	296	49	29,598	243,746	41,785	6,964
Eastern group (With Region 9)	47,046	25	210	1,730	296	49	9,859	81,191	13,918	2,320
Total United States	1,730,830	38	324	2,670	458	76	560,552	4,616,317	791,369	131,895

[a]Areas consumed by wildfire and emissions are for 1971.

[b]Geographic areas are defined in Figure 11.1-1.

[c]Hydrocarbons expressed as methane.

= 2 kg/MT (4 lb/ton) for nitrogen oxides (NO_x)

= Negligible for sulfur oxides (SO_x)

L = Fuel loading consumed (mass of forest fuel/unit land area burned)

A = Land area burned

E_i = Total emissions of pollutant "i" (mass of pollutant)

For example, suppose that it is necessary to estimate the total particulate emissions from a 10,000 hectare wildfire in the Southern area (Region 8). From Table 11.1-1 it is seen that the average fuel loading is 20 MT/hectare (9 ton/acre). Further, the pollutant yield for particulates is 8.5 kg/MT (17 lb/ton). Therefore, the emissions are:

E = (8.5 kg/MT of fuel) (20 MT of fuel/hectare) (10,000 hectares)

E = 1,700,000 kg = 1,700 MT

The most effective method for controlling wildfire emissions is, of course, to prevent the occurrence of forest fires using various means at the forester's disposal. A frequently used technique for reducing wildfire occurrence is "prescribed" or "hazard reduction" burning. This type of managed burn involves combustion of litter and underbrush in order to prevent fuel buildup on the forest floor and thus reduce the danger of a wildfire. Although some air pollution is generated by this preventative burning, the net amount is believed to be a relatively smaller quantity than that produced under a wildfire situation.

Reference for Section 11.1

1. Development of Emission Factors for Estimating Atmospheric Emissions from Forest Fires. Final Report. IIT Research Institute, Chicago, Ill. Prepared for Office of Air Quality Planning and Standards, Environmental Protection Agency, Research Triangle Park, N.C., under Contract No. 68-02-0641, October 1973. (Publication No. EPA-450/3-73-009).

11.2 FUGITIVE DUST SOURCES

Significant atmospheric dust arises from the mechanical disturbance of granular material exposed to the air. Dust generated from these open sources is termed "fugitive" because it is not discharged to the atmosphere in a confined flow stream. Common sources of fugitive dust include unpaved roads, agricultural tilling operations, aggregate storage piles, and heavy construction operations.

For the above categories of fugitive dust sources, the dust generation process is caused by two basic physical phenomena:

1. Pulverization and abrasion of surface materials by application of mechanical force through implements (wheels, blades, etc.).

2. Entrainment of dust particles by the action of turbulent air currents, such as wind erosion of an exposed surface by wind speeds over 19 kilometers per hour (12 miles/hr).

The air pollution impact of a fugitive dust source depends on the quantity and drift potential of the dust particles injected into the atmosphere. In addition to large dust particles that settle out near the source (often creating a local nuisance problem), considerable amounts of fine particles are also emitted and dispersed over much greater distances from the source.

The potential drift distance of particles is governed by the initial injection height of the particle, the particle's terminal settling velocity, and the degree of atmospheric turbulence. Theoretical drift distances, as a function of particle diameter and mean wind speed, have been computed for fugitive dust emissions.[1] These results indicate that, for a typical mean wind speed of 16 kilometers per hour (10 miles/hr), particles larger than about 100 micrometers are likely to settle out within 6 to 9 meters (20 to 30 ft) from the edge of the road. Particles that are 30 to 100 micrometers in diameter are likely to undergo impeded settling. These particles, depending upon the extent of atmospheric turbulence, are likely to settle within a few hundred feet from the road. Smaller particles, particularly those less than 10 to 15 micrometers in diameter, have much slower gravitational settling velocities and are much more likely to have their settling rate retarded by atmospheric turbulence. Thus, based on the presently available data, it appears appropriate to report only those particles smaller than 30 micrometers. Future updates to this document are expected to define appropriate factors for other particle sizes.

Several of the emission factors presented in this Section are expressed in terms of total suspended particulate (TSP). TSP denotes what is measured by a standard high volume sampler. Recent wind tunnel studies have shown that the particle mass capture efficiency curve for the high volume sampler is very broad, extending from 100 percent capture of particles smaller than 10 micrometers to a few percent capture of particles as large as 100 micrometers. Also, the capture efficiency curve varies with

wind speed and wind direction, relative to roof ridge orientation. Thus, high volume samplers do not provide definitive particle size information for emission factors. However, an effective cutpoint of 30 micrometers aerodynamic diameter is frequently assigned to the standard high volume sampler.

Control techniques for fugitive dust sources generally involve watering, chemical stabilization, or reduction of surface wind speed with windbreaks or source enclosures. Watering, the most common and generally least expensive method, provides only temporary dust control. The use of chemicals to treat exposed surfaces provides longer dust suppression but may be costly, have adverse effects on plant and animal life, or contaminate the treated material. Windbreaks and source enclosures are often impractical because of the size of fugitive dust sources.

11.2.1 UNPAVED ROADS

11.2.1.1 General

Dust plumes trailing behind vehicles traveling on unpaved roads are a familiar sight in rural areas of the United States. When a vehicle travels an unpaved road, the force of the wheels on the road surface causes pulverization of surface material. Particles are lifted and dropped from the rolling wheels, and the road surface is exposed to strong air currents in turbulent shear with the surface. The turbulent wake behind the vehicle continues to act on the road surface after the vehicle has passed.

11.2.1.2 Emissions And Correction Parameters

The quantity of dust emissions from a given segment of unpaved road varies linearly with the volume of traffic. Also, field investigations have shown that emissions depend on correction parameters (average vehicle speed, average vehicle weight, average number of wheels per vehicle, road surface texture and road surface moisture) that characterize the condition of a particular road and the associated vehicle traffic.[1-4]

Dust emissions from unpaved roads have been found to vary in direct proportion to the fraction of silt (particles smaller than 75 micrometers in diameter) in the road surface materials.[1] The silt fraction is determined by measuring the proportion of loose dry surface dust that passes a 200 mesh screen, using the ASTM-C-136 method. Table 11.2.1-1 summarizes measured silt values for industrial and rural unpaved roads.

The silt content of a rural dirt road will vary with location, and it should be measured. As a conservative approximation, the silt content of the parent soil in the area can be used. However, tests show that road silt content is normally lower than in the surrounding parent soil, because the fines are continually removed by the vehicle traffic, leaving a higher percentage of coarse particles.

Unpaved roads have a hard nonporous surface that usually dries quickly after a rainfall. The temporary reduction in emissions because of precipitation may be accounted for by not considering emissions on "wet" days (more than 0.254 millimeters [0.01 inches] of precipitation).

The following empirical expression may be used to estimate the quantity of size specific particulate emissions from an unpaved road, per vehicle kilometer traveled (VKT) or vehicle mile traveled (VMT), with a rating of A:

$$E = k(1.7)\left(\frac{s}{12}\right)\left(\frac{S}{48}\right)\left(\frac{W}{2.7}\right)^{0.7}\left(\frac{w}{4}\right)^{0.5}\left(\frac{365-p}{365}\right) \quad \text{(kg/VKT)} \qquad (1)$$

$$E = k(5.9)\left(\frac{s}{12}\right)\left(\frac{S}{30}\right)\left(\frac{W}{3}\right)^{0.7}\left(\frac{w}{4}\right)^{0.5}\left(\frac{365-p}{365}\right) \quad \text{(lb/VMT)}$$

TABLE 11.2.1-1. TYPICAL SILT CONTENT VALUES OF SURFACE MATERIALS ON INDUSTRIAL AND RURAL UNPAVED ROADS[a]

Industry	Road Use Or Surface Material	Plant Sites	Test Samples	Silt (%, w/w) Range	Silt (%, w/w) Mean
Copper smelting	Plant road	1	3	[15.9 - 19.1]	[17.0]
Iron and steel production	Plant road	9	20	4.0 - 16.0	8.0
Sand and gravel processing	Plant road	1	3	[4.1 - 6.0]	[4.8]
Stone quarrying and processing	Plant road	1	5	[10.5 - 15.6]	[14.1]
Taconite mining and processing	Haul road	1	12	[3.7 - 9.7]	[5.8]
	Service road	1	8	[2.4 - 7.1]	[4.3]
Western surface coal mining	Access road	2	2	4.9 - 5.3	5.1
	Haul road	3	21	2.8 - 18	8.4
	Scraper road	3	10	7.2 - 25	17
	Haul road (freshly graded)	2	5	18 - 29	24
Rural roads	Gravel	1	1	NA	[5.0]
	Dirt	2	5	5.8 - 68	28.5
	Crushed limestone	2	8	7.7 - 13	9.6

[a]References 4 - 11. Brackets indicate silt values based on samples from only one plant site.
NA = Not available.

where: E = emission factor
k = particle size multiplier (dimensionless)
s = silt content of road surface material (%)
S = mean vehicle speed, km/hr (mph)
W = mean vehicle weight, Mg (ton)
w = mean number of wheels
p = number of days with at least 0.254 mm (0.01 in.) of precipitation per year

The particle size multiplier, k, in Equation 1 varies with aerodynamic particle size range as follows:

Aerodynamic Particle Size Multiplier For Equation 1

≤30 μm	≤15 μm	≤10 μm	≤5 μm	≤2.5 μm
0.80	0.50	0.36	0.20	0.095

The number of wet days per year, p, for the geographical area of interest should be determined from local climatic data. Figure 11.2.1-1 gives the geographical distribution of the mean annual number of wet days per year in the United States.

Equation 1 retains the assigned quality rating if applied within the ranges of source conditions that were tested in developing the equation, as follows:

RANGES OF SOURCE CONDITIONS FOR EQUATION 1

Equation	Road silt content (%, w/w)	Mean vehicle weight		Mean vehicle speed		Mean no. of wheels
		Mg	ton	km/hr	mph	
1	4.3 - 20	2.7 - 142	3 - 157	21 - 64	13 - 40	4 - 13

Also, to retain the quality rating of the equation applied to a specific unpaved road, it is necessary that reliable correction parameter values for the specific road in question be determined. The field and laboratory procedures for determining road surface silt content are given in Reference 4. In the event that site specific values for correction parameters cannot be obtained, the appropriate mean values from Table 11.2.1-1 may be used, but the quality rating of the equation is reduced to B.

Equation 1 was developed for calculation of annual average emissions, and thus, is to be multiplied by annual vehicle distance traveled (VDT). Annual average values for each of the correction parameters are to be substituted into

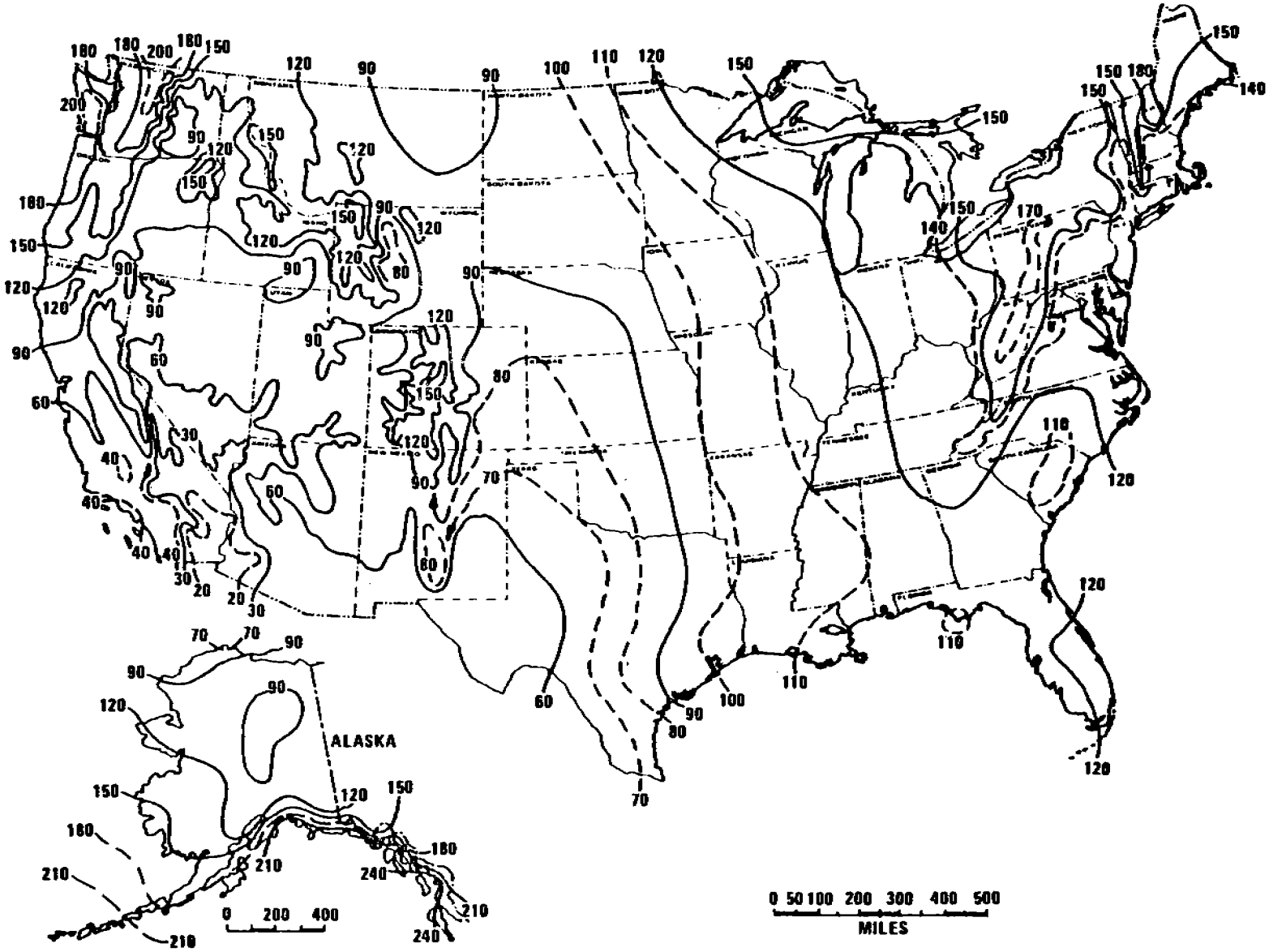

Figure 11.2.1-1. Mean number of days with 0.01 inch or more of precipitation in United States.[10]

the equation. Worst case emissions, corresponding to dry road conditions, may be calculated by setting p = 0 in the equation (which is equivalent to dropping the last term from the equation). A separate set of nonclimatic correction parameters and a higher than normal VDT value may also be justified for the worst case averaging period (usually 24 hours). Similarly, to calculate emissions for a 91 day season of the year using Equation 1, replace the term (365-p)/365 with the term (91-p)/91, and set p equal to the number of wet days in the 91 day period. Also, use appropriate seasonal values for the nonclimatic correction parameters and for VDT.

11.2.1.3 Control Methods

Common control techniques for unpaved roads are paving, surface treating with penetration chemicals, working into the roadbed of chemical stabilization chemicals, watering, and traffic control regulations. Chemical stabilizers work either by binding the surface material or by enhancing moisture retention. Paving, as a control technique, is often not economically practical. Surface chemical treatment and watering can be accomplished with moderate to low costs, but frequent retreatments are required. Traffic controls, such as speed limits and traffic volume restrictions, provide moderate emission reductions but may be difficult to enforce. The control efficiency obtained by speed reduction can be calculated using the predictive emission factor equation given above.

The control efficiencies achievable by paving can be estimated by comparing emission factors for unpaved and paved road conditions, relative to airborne particle size range of interest. The predictive emission factor equation for paved roads, given in Section 11.2.6, requires estimation of the silt loading on the traveled portion of the paved surface, which in turn depends on whether the pavement is periodically cleaned. Unless curbing is to be installed, the effects of vehicle excursion onto shoulders (berms) also must be taken into account in estimating control efficiency.

The control efficiencies afforded by the periodic use of road stabilization chemicals are much more difficult to estimate. The application parameters which determine control efficiency include dilution ratio, application intensity (mass of diluted chemical per road area) and application frequency. Between applications, the control efficiency is usually found to decay at a rate which is proportional to the traffic count. Therefore, for a specific chemical application program, the average efficiency is inversely proportional to the average daily traffic count. Other factors that affect the performance of chemical stabilizers include vehicle characteristics (e. g., average weight) and road characteristics (e. g., bearing strength).

Water acts as a road dust suppressant by forming cohesive moisture films among the discrete grains of road surface material. The average moisture level in the road surface material depends on the moisture added by watering and natural precipitation and on the moisture removed by evaporation. The natural evaporative forces, which vary with geographic location, are enhanced by the movement of traffic over the road surface. Watering, because of the frequency of treatments required, is generally not feasible for public roads and is used effectively only where water and watering equipment are available and where roads are confined to a single site, such as a construction location.

References for Section 11.2.1

1. C. Cowherd, Jr., et al., Development of Emission Factors for Fugitive Dust Sources, EPA-450/3-74-037, U. S. Environmental Protection Agency, Research Triangle Park, NC, June 1974.

2. R. J. Dyck and J. J. Stukel, "Fugitive Dust Emissions from Trucks on Unpaved Roads", Environmental Science and Technology, 10(10):1046-1048, October 1976.

3. R. O. McCaldin and K. J. Heidel, "Particulate Emissions from Vehicle Travel over Unpaved Roads", Presented at the 71st Annual Meeting of the Air Pollution Control Association, Houston, TX, June 1978.

4. C. Cowherd, Jr., et al., Iron and Steel Plant Open Dust Source Fugitive Emission Evaluation, EPA-600/2-79-103, U. S. Environmental Protection Agency, Research Triangle Park, NC, May 1979.

5. R. Bohn, et al., Fugitive Emissions from Integrated Iron and Steel Plants, EPA-600/2-78-050, U. S. Environmental Protection Agency, Research Triangle Park, NC, March 1978.

6. R. Bohn, Evaluation of Open Dust Sources in the Vicinity of Buffalo, New York, U. S. Environmental Protection Agency, New York, NY, March 1979.

7. C. Cowherd, Jr., and T. Cuscino, Jr., Fugitive Emissions Evaluation, Equitable Environmental Health, Inc., Elmhurst, IL, February 1977.

8. T. Cuscino, Jr., et al., Taconite Mining Fugitive Emissions Study, Minnesota Pollution Control Agency, Roseville, MN, June 1979.

9. K. Axetell and C. Cowherd, Jr., Improved Emission Factors for Fugitive Dust from Western Surface Coal Mining Sources, 2 Volumes, EPA Contract No. 68-03-2924, PEDCo Environmental, Inc., Kansas City, MO, July 1981.

10. T. Cuscino, Jr., et al., Iron and Steel Plant Open Source Fugitive Emission Control Evaluation, EPA-600/2-83-110, U. S. Environmental Protection Agency, Research Triangle Park, NC, October 1983.

11. J. Patrick Reider, Size Specific Emission Factors for Uncontrolled Industrial and Rural Roads, EPA Contract No. 68-02-3158, Midwest Research Institute, Kansas City, MO, September 1983.

12. C. Cowherd, Jr., and P. Englehart, Size Specific Particulate Emission Factors for Industrial and Rural Roads, EPA-600/7-85-038, U. S. Environmental Protection Agency, Research Triangle Park, NC, September 1985.

13. Climatic Atlas of the United States, U. S. Department of Commerce, Washington, DC, June 1968.

11.2.2 AGRICULTURAL TILLING

11.2.2.1 General

The two universal objectives of agricultural tilling are the creation of the desired soil structure to be used as the crop seedbed and the eradication of weeds. Plowing, the most common method of tillage, consists of some form of cutting loose, granulating and inverting the soil, and turning under the organic litter. Implements that loosen the soil and cut off the weeds but leave the surface trash in place have recently become more popular for tilling in dryland farming areas.

During a tilling operation, dust particles from the loosening and pulverization of the soil are injected into the atmosphere as the soil is dropped to the surface. Dust emissions are greatest during periods of dry soil and during final seedbed preparation.

11.2.2.2 Emissions and Correction Parameters

The quantity of dust from agricultural tilling is proportional to the area of land tilled. Also, emissions depend on surface soil texture and surface soil moisture content, conditions of a particular field being tilled.

Dust emissions from agricultural tilling have been found to vary directly with the silt content (defined as particles < 75 micrometers in diameter) of the surface soil depth (0 to 10 cm [0 to 4 in.]). The soil silt content is determined by measuring the proportion of dry soil that passes a 200 mesh screen, using ASTM-C-136 method. Note that this definition of silt differs from that customarily used by soil scientists, for whom silt is particles from 2 to 50 micrometers in diameter.

Field measurements[2] indicate that dust emissions from agricultural tilling are not significantly related to surface soil moisture, although limited earlier data had suggested such a dependence.[1] This is now believed to reflect the fact that most tilling is performed under dry soil conditions, as were the majority of the field tests.[1-2]

Available test data indicate no substantial dependence of emissions on the type of tillage implement, if operating at a typical speed (for example, 8 to 10 km/hr [5 to 6 mph]).[1-2]

11.2.2.3 Predictive Emission Factor Equation

The quantity of dust emissions from agricultural tilling, per acre of land tilled, may be estimated with a rating of A or B (see below) using the following empirical expression[2]:

$$E = k(5.38)(s)^{0.6} \quad \text{(kg/hectare)} \qquad (1)$$

$$E = k(4.80)(s)^{0.6} \quad \text{(lb/acre)}$$

where: E = emission factor
k = particle size multipler (dimensionless)
s = silt content of surface soil (%)

The particle size multiplier (k) in the equation varies with aerodynamic particle size range as follows:

Aerodynamic Particle Size Multiplier for Equation 1

Total particulate	< 30 μm	< 15 μm	< 10 μm	< 5 μm	< 2.5 μm
1.0	0.33	0.25	0.21	0.15	0.10

Equation 1 is rated A if used to estimate total particulate emissions, and B if used for a specific particle size range. The equation retains its assigned quality rating if applied within the range of surface soil silt content (1.7 to 88 percent) that was tested in developing the equation. Also, to retain the quality rating of Equation 1 applied to a specific agricultural field, it is necessary to obtain a reliable silt value(s) for that field. The sampling and analysis procedures for determining agricultural silt content are given in Reference 2. In the event that a site specific value for silt content cannot be obtained, the mean value of 18 percent may be used, but the quality rating of the equation is reduced by one level.

11.2.2.4 Control Methods[3]

In general, control methods are not applied to reduce emissions from agricultural tilling. Irrigation of fields before plowing will reduce emissions, but in many cases, this practice would make the soil unworkable and would adversely affect the plowed soil's characteristics. Control methods for agricultural activities are aimed primarily at reduction of emissions from wind erosion through such practices as continuous cropping, stubble mulching, strip cropping, applying limited irrigation to fallow fields, building windbreaks, and using chemical stabilizers. No data are available to indicate the effects of these or other control methods on agricultural tilling, but as a practical matter, it may be assumed that emission reductions are not significant.

References for Section 11.2.2

1. C. Cowherd, Jr., et al., Development of Emission Factors for Fugitive Dust Sources, EPA-450/3-74-037, U. S. Environmental Protection Agency, Research Triangle Park, NC, June 1974.

2. T. A. Cuscino, Jr., et al., The Role of Agricultural Practices in Fugitive Dust Emissions, California Air Resources Board, Sacramento, CA, June 1981.

3. G. A Jutze, et al., Investigation of Fugitive Dust - Sources Emissions And Control, EPA-450/3-74-036a, U. S. Environmental Protection Agency, Research Triangle Park, NC, June 1974.

11.2.3 AGGREGATE HANDLING AND STORAGE PILES

11.2.3.1 General

Inherent in operations that use minerals in aggregate form is the maintenance of outdoor storage piles. Storage piles are usually left uncovered, partially because of the need for frequent material transfer into or out of storage.

Dust emissions occur at several points in the storage cycle, during material loading onto the pile, during disturbances by strong wind currents, and during loadout from the pile. The movement of trucks and loading equipment in the storage pile area is also a substantial source of dust.

11.2.3.2 Emissions and Correction Parameters

The quantity of dust emissions from aggregate storage operations varies with the volume of aggregate passing through the storage cycle. Also, emissions depend on three correction parameters that characterize the condition of a particular storage pile: age of the pile, moisture content and proportion of aggregate fines.

When freshly processed aggregate is loaded onto a storage pile, its potential for dust emissions is at a maximum. Fines are easily disaggregated and released to the atmosphere upon exposure to air currents from aggregate transfer itself or high winds. As the aggregate weathers, however, potential for dust emissions is greatly reduced. Moisture causes aggregation and cementation of fines to the surfaces of larger particles. Any significant rainfall soaks the interior of the pile, and the drying process is very slow.

Field investigations have shown that emissions from aggregate storage operations vary in direct proportion to the percentage of silt (particles < 75 μm in diameter) in the aggregate material.[1 3] The silt content is determined by measuring the proportion of dry aggregate material that passes through a 200 mesh screen, using ASTM-C-136 method. Table 11.2.3-1 summarizes measured silt and moisture values for industrial aggregate materials.

11.2.3.3 Predictive Emission Factor Equations

Total dust emissions from aggregate storage piles are contributions of several distinct source activities within the storage cycle:

1. Loading of aggregate onto storage piles (batch or continuous drop operations).
2. Equipment traffic in storage area.
3. Wind erosion of pile surfaces and ground areas around piles.
4. Loadout of aggregate for shipment or for return to the process stream (batch or continuous drop operations).

TABLE 11.2.3-1. TYPICAL SILT AND MOISTURE CONTENT VALUES OF MATERIALS AT VARIOUS INDUSTRIES

Industry	Material	Silt (%)			Moisture (%)		
		No. of test samples	Range	Mean	No. of test samples	Range	Mean
Iron and steel production[a]	Pellet ore	10	1.4 - 13	4.9	8	0.64 - 3.5	2.1
	Lump ore	9	2.8 - 19	9.5	6	1.6 - 8.1	5.4
	Coal	7	2 - 7.7	5	6	2.8 - 11	4.8
	Slag	3	3 - 7.3	5.3	3	0.25 - 2.2	0.92
	Flue dust	2	14 - 23	18.0	0	NA	NA
	Coke breeze	1		5.4	1		6.4
	Blended ore	1		15.0	1		6.6
	Sinter	1		0.7	0	NA	NA
	Limestone	1		0.4	0	NA	NA
Stone quarrying and processing[b]	Crushed limestone	2	1.3 - 1.9	1.6	2	0.3 - 1.1	0.7
Taconite mining and processing[c]	Pellets	9	2.2 - 5.4	3.4	7	0.05 - 2.3	0.96
	Tailings	2	NA	11.0	1		0.35
Western surface coal mining[d]	Coal	15	3.4 - 16	6.2	7	2.8 - 20	6.9
	Overburden	15	3.8 - 15	7.5	0	NA	NA
	Exposed ground	3	5.1 - 21	15.0	3	0.8 - 6.4	3.4

[a] References 2-5. NA = not applicable.
[b] Reference 1.
[c] Reference 6.
[d] Reference 7.

Adding aggregate material to a storage pile or removing it usually involves dropping the material onto a receiving surface. Truck dumping on the pile or loading out from the pile to a truck with a front end loader are examples of batch drop-operations. Adding material to the pile by a conveyor stacker is an example of a continuous drop operation.

The quantity of particulate emissions generated by a batch drop operation, per ton of material transferred, may be estimated, with a rating of C, using the following empirical expression[2]:

$$E = k(0.00090)\ \frac{\left(\frac{s}{5}\right)\left(\frac{U}{2.2}\right)\left(\frac{H}{1.5}\right)}{\left(\frac{M}{2}\right)^2\left(\frac{Y}{4.6}\right)^{0.33}}\quad \text{(kg/Mg)} \qquad (1)$$

$$E = k(0.0018)\ \frac{\left(\frac{s}{5}\right)\left(\frac{U}{5}\right)\left(\frac{H}{5}\right)}{\left(\frac{M}{2}\right)^2\left(\frac{Y}{6}\right)^{0.33}}\quad \text{(lb/ton)}$$

where: E = emission factor
k = particle size multipler (dimensionless)
s = material silt content (%)
U = mean wind speed, m/s (mph)
H = drop height, m (ft)
M = material moisture content (%)
Y = dumping device capacity, m^3 (yd^3)

The particle size multipler (k) for Equation 1 varies with aerodynamic particle size, shown in Table 11.2.3-2.

TABLE 11.2.3-2. AERODYNAMIC PARTICLE SIZE MULTIPLIER (k) FOR EQUATIONS 1 AND 2

Equation	< 30 μm	< 15 μm	< 10 μm	< 5 μm	< 2.5 μm
Batch drop	0.73	0.48	0.36	0.23	0.13
Continuous drop	0.77	0.49	0.37	0.21	0.11

The quantity of particulate emissions generated by a continuous drop operation, per ton of material transferred, may be estimated, with a rating of C, using the following empirical expression[3]:

$$E = k(0.00090)\ \frac{\left(\frac{s}{5}\right)\left(\frac{U}{2.2}\right)\left(\frac{H}{3.0}\right)}{\left(\frac{M}{2}\right)^2} \quad \text{(kg/Mg)} \qquad (2)$$

$$E = k(0.0018)\ \frac{\left(\frac{s}{5}\right)\left(\frac{U}{5}\right)\left(\frac{H}{10}\right)}{\left(\frac{M}{2}\right)^2} \quad \text{(lb/ton)}$$

where: E = emission factor
k = particle size multiplier (dimensionless)
s = material silt content (%)
U = mean wind speed, m/s (mph)
H = drop height, m (ft)
M = material moisture content (%)

The particle size multiplier (k) for Equation 2 varies with aerodynamic particle size, as shown in Table 11.2.3-2.

Equations 1 and 2 retain the assigned quality rating if applied within the ranges of source conditions that were tested in developing the equations, as given in Table 11.2.3-3. Also, to retain the quality ratings of Equations 1 or 2 applied to a specific facility, it is necessary that reliable correction parameters be determined for the specific sources of interest. The field and laboratory procedures for aggregate sampling are given in Reference 3. In the event that site specific values for correction parameters cannot be obtained, the appropriate mean values from Table 11.2.3-1 may be used, but in that case, the quality ratings of the equations are reduced by one level.

TABLE 11.2.3-3. RANGES OF SOURCE CONDITIONS FOR EQUATIONS 1 AND 2[a]

Equation	Silt content (%)	Moisture content (%)	Dumping capacity		Drop height	
			m^3	yd^3	m	ft
Batch drop	1.3 - 7.3	0.25 - 0.70	2.10 - 7.6	2.75 - 10	NA	NA
Continuous drop	1.4 - 19	0.64 - 4.8	NA	NA	1.5 - 12	4.8 - 39

[a] NA = not applicable.

For emissions from equipment traffic (trucks, front end loaders, dozers, etc.) traveling between or on piles, it is recommended that the equations for vehicle traffic on unpaved surfaces be used (see Section 11.2.1). For vehicle travel between storage piles, the silt value(s) for the areas

among the piles (which may differ from the silt values for the stored materials) should be used.

For emissions from wind erosion of active storage piles, the following total suspended particulate (TSP) emission factor equation is recommended:

$$E = 1.9 \left(\frac{s}{1.5}\right) \left(\frac{365-p}{235}\right) \left(\frac{f}{15}\right) \text{ (kg/day/hectare)} \qquad (3)$$

$$E = 1.7 \left(\frac{s}{1.5}\right) \left(\frac{365-p}{235}\right) \left(\frac{f}{15}\right) \text{ (lb/day/acre)}$$

where: E = total suspended particulate emission factor
s = silt content of aggregate (%)
p = number of days with ≧ 0.25 mm (0.01 in.) of precipitation per year
f = percentage of time that the unobstructed wind speed exceeds 5.4 m/s (12 mph) at the mean pile height

The coefficient in Equation 3 is taken from Reference 1, based on sampling of emissions from a sand and gravel storage pile area during periods when transfer and maintenance equipment was not operating. The factor from Test Report 1, expressed in mass per unit area per day, is more reliable than the factor expressed in mass per unit mass of material placed in storage, for reasons stated in that report. Note that the coefficient has been halved to adjust for the estimate that the wind speed through the emission layer at the test site was one half of the value measured above the top of the piles. The other terms in this equation were added to correct for silt, precipitation and frequency of high winds, as discussed in Reference 2. Equation 3 is rated C for application in the sand and gravel industry and D for other industries.

Worst case emissions from storage pile areas occur under dry windy conditions. Worst case emissions from materials handling (batch and continuous drop) operations may be calculated by substituting into Equations 1 and 2 appropriate values for aggregate material moisture content and for anticipated wind speeds during the worst case averaging period, usually 24 hours. The treatment of dry conditions for vehicle traffic (Section 11.2.1) and for wind erosion (Equation 3), centering around parameter p, follows the methodology described in Section 11.2.1. Also, a separate set of nonclimatic correction parameters and source extent values corresponding to higher than normal storage pile activity may be justified for the worst case averaging period.

11.2.3.4 Control Methods

Watering and chemical wetting agents are the principal means for control of aggregate storage pile emissions. Enclosure or covering of inactive piles to reduce wind erosion can also reduce emissions. Watering is useful mainly to reduce emissions from vehicle traffic in the storage pile area. Watering of the storage piles themselves typically has only a very temporary slight effect on total emissions. A much more effective technique is to apply chemical wetting agents for better wetting of fines and

longer retention of the moisture film. Continuous chemical treatment of material loaded onto piles, coupled with watering or treatment of roadways, can reduce total particulate emissions from aggregate storage operations by up to 90 percent.[8]

References for Section 11.2.3

1. C. Cowherd, Jr., et al., Development of Emission Factors for Fugitive Dust Sources, EPA-450/3-74-037, U. S. Environmental Protection Agency, Research Triangle Park, NC, June 1974.

2. R. Bohn, et al., Fugitive Emissions from Integrated Iron and Steel Plants, EPA-600/2-78-050, U. S. Environmental Protection Agency, Research Triangle Park, NC, March 1978.

3. C. Cowherd, Jr., et al., Iron and Steel Plant Open Dust Source Fugitive Emission Evaluation, EPA-600/2-79-103, U. S. Environmental Protection Agency, Research Triangle Park, NC, May 1979.

4. R. Bohn, Evaluation of Open Dust Sources in the Vicinity of Buffalo, New York, U. S. Environmental Protection Agency, New York, NY, March 1979.

5. C. Cowherd, Jr., and T. Cuscino, Jr., Fugitive Emissions Evaluation, Equitable Environmental Health, Inc., Elmhurst, IL, February 1977.

6. T. Cuscino, et al., Taconite Mining Fugitive Emissions Study, Minnesota Pollution Control Agency, Roseville, MN, June 1979.

7. K. Axetell and C. Cowherd, Jr., Improved Emission Factors for Fugitive Dust from Western Surface Coal Mining Sources, 2 Volumes, EPA Contract No. 68-03-2924, PEDCo Environmental, Inc., Kansas City, MO, July 1981.

8. G. A. Jutze, et al., Investigation of Fugitive Dust Sources Emissions and Control, EPA-450/3-74-036a, U. S. Environmental Protection Agency, Research Triangle Park, NC, June 1974.

11.2.4 Heavy Construction Operations

11.2.4.1 General – Heavy construction is a source of dust emissions that may have substantial temporary impact on local air quality. Building and road construction are the prevalent construction categories with the highest emissions potential. Emissions during the construction of a building or road are associated with land clearing, blasting, ground excavation, cut and fill operations, and the construction of the particular facility itself. Dust emissions vary substantially from day to day depending on the level of activity, the specific operations, and the prevailing weather. A large portion of the emissions result from equipment traffic over temporary roads at the construction site.

11.2.4.2 Emissions and Correction Parameters – The quantity of dust emissions from construction operations are proportional to the area of land being worked and the level of construction activity. Also, by analogy to the parameter dependence observed for other similar fugitive dust sources,[1] it is probable that emissions from heavy construction operations are directly proportional to the silt content of the soil (that is, particles smaller than 75 μm in diameter) and inversely proportional to the square of the soil moisture, as represented by Thornthwaite's precipitation-evaporation (PE) index.[2]

11.2.4.3 Emission Factor – Based on field measurements of suspended dust emissions from apartment and shopping center construction projects, an approximate emission factor for construction operations is:

1.2 tons per acre of construction per month of activity

This value applies to construction operations with: (1) medium activity level, (2) moderate silt content ($\sim$30 percent), and (3) semiarid climate (PE $\sim$50; see Figure 11.2-2). Test data are not sufficient to derive the specific dependence of dust emissions on correction parameters.

The above emission factor applies to particles less than about 30 μm in diameter, which is the effective cut-off size for the capture of construction dust by a standard high-volume filtration sampler[1], based on a particle density of 2.0-2.5 g/cm^3.

11.2.4.4 Control Methods – Watering is most often selected as a control method because water and necessary equipment are usually available at construction sites. The effectiveness of watering for control depends greatly on the frequency of application. An effective watering program (that is, twice daily watering with complete coverage) is estimated to reduce dust emissions by up to 50 percent.[3] Chemical stabilization is not effective in reducing the large portion of construction emissions caused by equipment traffic or active excavation and cut and fill operations. Chemical stabilizers are useful primarily for application on completed cuts and fills at the construction site. Wind erosion emissions from inactive portions of the construction site can be reduced by about 80 percent in this manner, but this represents a fairly minor reduction in total emissions compared with emissions occurring during a period of high activity.

References for Section 11.2.4

1. Cowherd, C., Jr., K. Axetell, Jr., C. M. Guenther, and G. A. Jutze. Development of Emissions Factors for Fugitive Dust Sources. Midwest Research Institute, Kansas City, Mo. Prepared for Environmental Protection Agency, Research Triangle Park, N.C. under Contract No. 68-02-0619. Publication No. EPA-450/3-74-037. June 1974.

2. Thornthwaite, C. W. Climates of North America According to a New Classification. Geograph. Rev. *21*: 633-655, 1931.

3. Jutze, G. A., K. Axetell, Jr., and W. Parker. Investigation of Fugitive Dust-Sources Emissions and Control, PEDCo Environmental Specialists, Inc., Cincinnati, Ohio. Prepared for Environmental Protection Agency, Research Triangle Park, N.C. under Contract No. 68-02-0044. Publication No. EPA-450/3-74-036a. June 1974.

11.2.5 PAVED URBAN ROADS

11.2.5.1 General

Various field studies have indicated that dust emissions from paved street are a major component of the material collected by high volume samplers. Reentrained traffic dust has been found to consist primarily of mineral matter similar to common sand and soil, mostly tracked or deposited onto the roadway by vehicle traffic itself. Other particulate matter is emitted directly by the vehicles from, for example, engine exhaust, wear of bearings and brake linings, and abrasion of tires against the road surface. Some of these direct emissions may settle to the street surface, subsequently to be reentrained. Appreciable emissions from paved streets are added by wind erosion when the wind velocity exceeds a threshold value of about 20 kilometers per hour (13 miles per hour).[2] Figure 11.2.5-1 illustrates particulate transfer processes occurring on urban streets.

11.2.5.2 Emission Factors And Correction Parameters

Dust emission rates may vary according to a number of factors. The most important are thought to be traffic volume and the quantity and particle size of loose surface material on the street. On a normal paved street, an equilibrium is reached whereby the accumulated street deposits are maintained at a relatively constant level. On average, vehicle carryout from unpaved areas may be the largest single source of street deposit. Accidental spills, street cleaning and rainfall are activities that disrupt the street loading equilibrium, usually for a relatively short duration.

The lead content of fuels also becomes a part of reentrained dust from vehicle traffic. Studies have found that, for the 1975-76 sampling period, the lead emission factor for this source was approximately 0.03 grams per vehicle mile traveled (VMT). With the reduction of lead in gasoline and the use of catalyst equipped vehicles, the lead factor for reentrained dust was expected to drop below 0.01 grams per mile by 1980.[3]

The quantity of dust emissions of vehicle traffic on a paved roadway may be estimated using the following empirical expression[4]:

$$e = k \left(\frac{sL}{0.5}\right)^{p} \quad \text{(g/VKT)}$$

$$e = k \left(\frac{sL}{0.7}\right)^{p} \quad \text{(lb/VMT)}$$

where: e = particulate emission factor, g/VKT (lb/VMT)
L = total road surface dust loading, g/m^2 ($grains/ft^2$)
s = surface silt content, fraction of particles $\leq$ 75 μm diameter (American Association of State Highway Officials)
k = base emission factor, g/VKT (lb/VMT)
p = exponent (dimensionless)

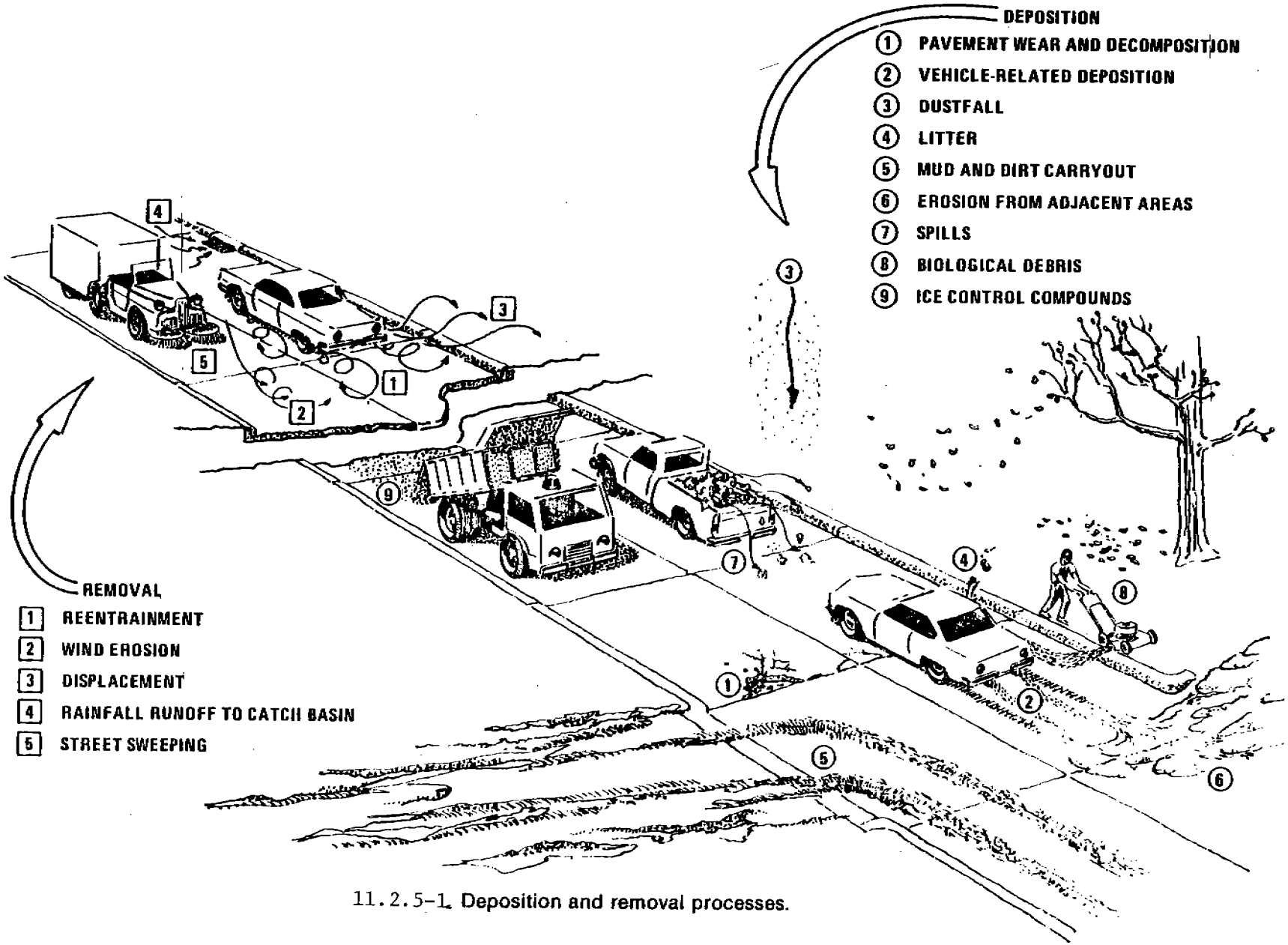

11.2.5-1. Deposition and removal processes.

The total loading (excluding litter) is measured by sweeping and vacuuming lateral strips of known area from each active travel lane. The silt fraction is determined by measuring the proportion of loose dry road dust that passes a 200 mesh screen, using the ASTM-C-136 method. Silt loading is the product of total loading and silt content.

The base emission factor coefficients, k, and exponents, p, in the equation for each size fraction are listed in Table 11.2.5-1. Total suspended particulate (TSP) denotes that particle size fraction of airborne particulate matter that would be collected by a standard high volume sampler.

TABLE 11.2.5-1. PAVED URBAN ROAD EMISSION FACTOR EQUATION PARAMETERS[a]

Particle Size Fraction[b]	k g/VKT (lb/VMT)	p
TSP	5.87 (0.0208)	0.9
$\leq$ 15 μm	2.54 (0.0090)	0.8
$\leq$ 10 μm	2.28 (0.0081)	0.8
$\leq$ 2.5 μm	1.02 (0.0036)	0.6

[a]Reference 4. See page 11.2.5-1 for equation. TSP = total suspended particulate.
[b]Aerodynamic diameter.

Microscopic analysis indicates the origin of material collected on high volume filters to be about 40 weight percent combustion products and 59 percent mineral matter, with traces of biological matter and rubber tire particles. The small particulate is mainly combustion products, while most of the large material is of mineral origin.

11.2.5.3 Emissions Inventory Applications[4]

For most emissions inventory applications involving urban paved roads, actual measurements of silt loading will probably not be made. Therefore, to facilitate the use of the previously described equation, it is necessary to characterize silt loadings according to parameters readily available to persons developing the inventories. It is convenient to characterize variations in silt loading with a roadway classification system, and this is presented in Table 11.2.5-2. This system generally corresponds to the classification systems used by transportation agencies, and thus the data necessary for an emissions inventory - number of road kilometers per road category and traffic counts - should be easy to obtain. In some situations, it may be necessary to combine this silt loading information with sound engineering judgment in order to approximate the loadings for roadway types not specifically included in Table 11.2.5-2.

TABLE 11.2.5-2. PAVED URBAN ROADWAY CLASSIFICATION[a]

Roadway Category	Average Daily Traffic (Vehicles)	Lanes
Freeways/expressways	> 50,000	≥ 4
Major streets/highways	> 10,000	≥ 4
Collector streets	500 - 10,000	2[b]
Local streets	< 500	2[c]

[a]Reference 4.
[b]Road width ≥ 32 ft.
[c]Road width ≤ 32 ft.

A data base of 44 samples analyzed according to consistent procedures may be used to characterize the silt loadings for each roadway category.[4] These samples, obtained during recent field sampling programs, represent a broad range of urban land use and roadway conditions. Geometric means for this data set are given by sampling location and roadway category in Table 11.2.5-3.

TABLE 11.2.5-3. SUMMARY OF SILT LOADINGS (sL) FOR PAVED URBAN ROADWAYS[a]

City	Roadway Category							
	Local Streets		Collector Streets		Major Streets/ Highways		Freeways/ Expressways	
	$\overline{X}_g$ (g/m^2)	n	$\overline{X}_g$ (g/m^2)	n	$\overline{X}_g$ (g/m^2)	n	$\overline{X}_g$ (g/m^2)	n
Baltimore	1.42	2	0.72	4	0.39	3	-	-
Buffalo	1.41	5	0.29	2	0.24	4	-	-
Granite City (IL)	-	-	-	-	0.82	3	-	-
Kansas City	-	-	2.11	4	0.41	13	-	-
St. Louis	-	-	-	-	0.16	3	0.022	1
All	1.41	7	0.92	10	0.36	26	0.022	1

[a]Reference 4. X_g = geometric mean based on corresponding n sample size. Dash = not available. To convert g/m^2 to grains/ft^2 multiply g/m^2 by 1.4337.

These sampling locations can be considered representative of most large urban areas in the United States, with the possible exception of those in the Southwest. Except for the collector roadway category, the mean silt loadings do not vary greatly from city to city, though the St. Louis mean for major roads is somewhat lower than those of the other four cities. The substantial variation within the collector roadway category is probably attributable to the effects of land use around the specific sampling locations. It should also be noted that an examination of data collected at three cities in Montana during early spring indicates that winter road sanding may produce loadings five to six times higher than the means of the loadings given in Table 11.2.5-3 for the respective road categories.[5]

Table 11.2.5-4 presents the emission factors by roadway category and particle size. These were obtained by inserting the above mean silt loadings into the equation on page 11.2.5-1. These emission factors can be used directly for many emission inventory purposes. It is important to note that the paved road emission factors for TSP agree quite well with those developed from previous testing of roadway sites in the major street and highway category, yielding mean TSP emission factors of 4.3 grams/VKT (Reference 6) and 2.6 grams/VKT (Reference 7).

TABLE 11.2.5-4. RECOMMENDED PARTICULATE EMISSION FACTORS FOR SPECIFIC ROADWAY CATEGORIES AND PARTICLE SIZE FRACTIONS

Roadway Category	Emission Factor			
	TSP	$\leq$ 15 μm	$\leq$ 10 μm	$\leq$ 2.5 μm
	g/VKT (lb/VMT)	g/VKT (lb/VMT)	g/VKT (lb/VMT)	g/VKT (lb/VMT)
Local streets	15 (0.053)	5.8 (0.021)	5.2 (0.018)	1.9 (0.0067)
Collector streets	10 (0.035)	4.1 (0.015)	3.7 (0.013)	1.5 (0.0053)
Major streets/ highways	4.4 (0.016)	2.0 (0.0071)	1.8 (0.0064)	0.84 (0.0030)
Freeways/ expressways	0.35 (0.0012)	0.21 (0.00074)	0.19 (0.00067)	0.16 (0.00057)

References for Section 11.2.5

1. D. R. Dunbar, Resuspension of Particulate Matter, EPA-450/2-76-031, U. S. Environmental Protection Agency, Research Triangle Park, NC, March 1976.

2. M. P. Abel, "The Impact of Refloatation on Chicago's Total Suspended Particulate Levels", Purdue University, Purdue, IN, August 1974.

3. C. M. Maxwell and D. W. Nelson, A Lead Emission Factor for Reentrained Dust from a Paved Roadway, EPA-450/3-78-021, U. S. Environmental Protection Agency, Research Triangle Park, NC, April 1978.

4. Chatten Cowherd, Jr. and Phillip J. Englehart, Paved Road Particulate Emissions, EPA-600/7-84-077, U. S. Environmental Protection Agency, Washington, DC, July 1984.

5. R. Bohn, Update and Improvement of the Emission Inventory for MAPS Study Areas, State of Montana, Helena, MT, August 1979.

6. C. Cowherd, Jr., et al., Quantification of Dust Entrainment from Paved Roadways, EPA-450/3-77-027, U. S. Environmental Protection Agency, Research Triangle Park, NC, July 1977.

7. K. Axetell and J. Zell, Control of Reentrained Dust from Paved Streets, EPA-907/9-77-077, U. S. Environmental Protection Agency, Kansas City, MO, August 1977.

11.2.6 INDUSTRIAL PAVED ROADS

11.2.6.1 General

Various field studies have indicated that dust emissions from industrial paved roads are a major component of atmospheric particulate matter in the vicinity of industrial operations. Industrial traffic dust has been found to consist primarily of mineral matter, mostly tracked or deposited onto the roadway by vehicle traffic itself when vehicles enter from an unpaved area or travel on the shoulder of the road, or when material is spilled onto the paved surface from haul truck traffic.

11.2.6.2 Emissions And Correction Parameters

The quantity of dust emissions from a given segment of paved road varies linearly with the volume of traffic. In addition, field investigations have shown that emissions depend on correction parameters (road surface silt content, surface dust loading and average vehicle weight) of a particular road and associated vehicle traffic.[1-2]

Dust emissions from industrial paved roads have been found to vary in direct proportion to the fraction of silt (particles ≤ 75 μm in diameter) in the road surface material.[1-2] The silt fraction is determined by measuring the proportion of loose dry surface dust that passes a 200 mesh screen, using the ASTM-C-136 method. In addition, it has also been found that emissions vary in direct proportion to the surface dust loading.[1-2] The road surface dust loading is that loose material which can be collected by broom sweeping and vacuuming of the traveled portion of the paved road. Table 11.2.6-1 summarizes measured silt and loading values for industrial paved roads.

11.2.6.3 Predictive Emission Factor Equations

The quantity of total suspended particulate emissions generated by vehicle traffic on dry industrial paved roads, per vehicle kilometer traveled (VKT) or vehicle mile traveled (VMT) may be estimated, with a rating of B or D (see below), using the following empirical expression[2]:

$$E = 0.022\ I \left(\frac{4}{n}\right)\left(\frac{s}{10}\right)\left(\frac{L}{280}\right)\left(\frac{W}{2.7}\right)^{0.7} \quad \text{(kg/VKT)} \qquad (1)$$

$$E = 0.077\ I \left(\frac{4}{n}\right)\left(\frac{s}{10}\right)\left(\frac{L}{1,000}\right)\left(\frac{W}{3}\right)^{0.7} \quad \text{(lb/VMT)}$$

where: E = emission factor
I = industrial augmentation factor (dimensionless) (see below)
n = number of traffic lanes
s = surface material silt content (%)
L = surface dust loading, kg/km (lb/mile) (see below)
W = average vehicle weight, Mg (ton)

TABLE 11.2.6-1. TYPICAL SILT CONTENT AND LOADING VALUES FOR PAVED ROADS AT INDUSTRIAL FACILITIES[a]

Industry	No. of Plant Sites	No. of Samples	Silt (%, w/w) Range	Silt (%, w/w) Mean	No. of Travel Lanes	Total loading Range	Total loading Mean	Units[b]	Silt loading (g/m) Range	Silt loading (g/m) Mean
Copper smelting	1	3	[15.4-21.7]	[19.0]	2	[12.9-19.5] [45.8-69.2]	[15.9] [55.4]	kg/km lb/mi	[188-400]	[292]
Iron and steel production	6	20	1.1-35.7	12.5	2 2	0.006-4.77 0.020-16.9	0.495 1.75	kg/km lb/mi	<1.0-2.3	7
Asphalt batching	1	4	[2.6-4.6]	[3.6]	1	[12.1-18.0] [43.0-64.0]	[15.7] [55.7]	kg/km lb/mi	[76-193]	[138]
Concrete batching	1	3	[5.2-6.0]	[5.5]	2	[1.4-1.8] [5.0-6.4]	[1.7] [5.9]	kg/km lb/mi	[11-12]	[12]
Sand and gravel processing	1	3	[6.4-7.9]	[7.1]	1	[2.8-5.5] [9.9-19.4]	[3.8] [13.3]	kg/km lb/mi	[53-95]	[70]

[a]References 1-5. Brackets indicate values based on samples obtained at only one plant site.
[b]Multiply entries by 1,000 to obtain stated units.

The industrial road augmentation factor (I) in the Equation 1 takes into account higher emissions from industrial roads than from urban roads. I = 7.0 for an industrial roadway which traffic enters from unpaved areas. I = 3.5 for an industrial roadway with unpaved shoulders where 20 percent of the vehicles are forced to travel temporarily with one set of wheels on the shoulder. I = 1.0 for cases in which traffic does not travel on unpaved areas. A value between 1.0 and 7.0 which best represents conditions for paved roads at a certain industrial facility should be used for I in the equation.

The equation retains the quality rating of B if applied to vehicles traveling entirely on paved surfaces (I = 1.0) and if applied within the range of source conditions that were tested in developing the equation as follows:

Silt content (%)	Surface loading kg/km	Surface loading lb/mile	No. of lanes	Vehicle weight Mg	Vehicle weight tons
5.1 - 92	42.0 - 2,000	149 - 7,100	2 - 4	2.7 - 12	3 - 13

If I is >1.0, the rating of the equation drops to D because of the subjectivity in the guidelines for estimating I.

The quantity of fine particle emissions generated by traffic consisting predominately of medium and heavy duty vehicles on dry industrial paved roads, per vehicle unit of travel, may be estimated, with a rating of A, using the

$$E = k \left(\frac{sL}{12}\right)^{0.3} \quad \text{(kg/VKT)} \qquad (2)$$

$$E = k(3.5) \left(\frac{sL}{0.35}\right)^{0.3} \quad \text{(lb/VMT)}$$

where: E = emission factor
sL = road surface silt loading, g/m^2 (oz/yd^2)

The particle size multiplier (k) above varies with aerodynamic size range as follows:

Aerodynamic Particle Size Multiplier (k) For Equation 2 (Dimensionless)

≤15 μm	≤10 μm	≤2.5 μm
0.28	0.22	0.081

To determine particulate emissions for a specific particle size range, use the appropriate value of k above.

The equation retains the quality rating of A, if applied within the range of source conditions that were tested in developing the equation as follows:

silt loading, 2 - 240 g/m^2 (0.06 - 7.1 oz/yd^2)

mean vehicle weight, 6 - 42 Mg (7 - 46 tons)

The following single valued emission factors[6] may be used in lieu of Equation 2 to estimate fine particle emissions generated by light duty vehicles on dry, heavily loaded industrial roads, with a rating of C:

Emission Factors For Light Duty Vehicles On Heavily Loaded Roads

≤15 μm	≤10 μm
0.12 kg/VKT (0.41 lb/VMT)	0.093 kg/VKT (0.33 lb/VMT)

These emission factors retain the assigned quality rating, if applied within the range of source conditions that were tested in developing the factors, as follows:

silt loading, 15 - 400 g/m^2 (0.44 - 12 oz/yd^2)

mean vehicle weight, ≤4 Mg (≤4 tons)

Also, to retain the quality ratings of Equations 1 and 2 when applied to a specific industrial paved road, it is necessary that reliable correction parameter values for the specific road in question be determined. The field and

laboratory procedures for determining surface material silt content and surface dust loading are given in Reference 2. In the event that site specific values for correction parameters cannot be obtained, the appropriate mean values from Table 11.2.6-1 may be used, but the quality ratings of the equations should be reduced by one level.

11.2.6.4 Control Methods

Common control techniques for industrial paved roads are broom sweeping, vacuum sweeping and water flushing, used alone or in combination. All of these techniques work by reducing the silt loading on the traveled portions of the road. As indicated by a comparison of Equations 1 and 2, fine particle emissions are less sensitive than total suspended particulate emissions to the value of silt loading. Consistent with this, control techniques are generally less effective for the finer particle sizes.[4] The exception is water flushing, which appears preferentially to remove (or agglomerate) fine particles from the paved road surface. Broom sweeping is generally regarded as the least effective of the common control techniques, because the mechanical sweeping process is inefficient in removing silt from the road surface.

To achieve control efficiencies on the order of 50 percent on a paved road with moderate traffic (500 vehicles per day) requires cleaning of the surface at least twice per week.[4] This is because of the characteristically rapid buildup of road surface material from spillage and the tracking and deposition of material from adjacent unpaved surfaces, including the shoulders (berms) of the paved road. Because industrial paved roads usually do not have curbs, it is important that the width of the paved road surface be sufficient for vehicles to pass without excursion onto unpaved shoulders. Equation 1 indicates that elimination of vehicle travel on unpaved or untreated shoulders would effect a major reduction in particulate emissions. An even greater effect, by a factor of 7, would result from preventing travel from unpaved roads or parking lots onto the paved road of interest.

References for Section 11.2.6

1. R. Bohn, et al., Fugitive Emissions from Integrated Iron and Steel Plants, EPA-600/2-78-050, U. S. Environmental Protection Agency, Research Triangle Park, NC, March 1978.

2. C. Cowherd, Jr., et al., Iron and Steel Plant Open Dust Source Fugitive Emission Evaluation, EPA-600/2-79-103, U. S. Environmental Protection Agency, Research Triangle Park, NC, May 1979.

3. R. Bohn, Evaluation of Open Dust Sources in the Vicinity of Buffalo, New York, U. S. Environmental Protection Agency, New York, NY, March 1979.

4. T. Cuscino, Jr., et al., Iron and Steel Plant Open Source Fugitive Emission Control Evaluation, EPA-600/2-83-110, U. S. Environmental Protection Agency, Research Triangle Park, NC, October 1983.

5. J. Patrick Reider, Size Specific Particulate Emission Factors for Uncontrolled Industrial and Rural Roads, EPA Contract No. 68-02-3158, Midwest Research Institute, Kansas City, MO, September 1983.

6. C. Cowherd, Jr. and P. Englehart, Size Specific Particulate Emission Factors For Industrial And Rural Roads, EPA-600/7-85-051, U. S. Environmental Protection Agency, Washington, DC, September 1985.

11.3 EXPLOSIVES DETONATION

11.3.1 General [1-5]

This section deals mainly with pollutants resulting from the detonation of industrial explosives and firing of small arms. Military applications are excluded from this discussion. Emissions associated with the manufacture of explosives are treated in Section 5.6, Explosives.

An explosive is a chemical material that is capable of extremely rapid combustion resulting in an explosion or detonation. Since an adequate supply of oxygen cannot be drawn from the air, a source of oxygen must be incorporated into the explosive mixture. Some explosives, such as trinitrotoluene (TNT), are single chemical species, but most explosives are mixtures of several ingredients. "Low explosive" and "high explosive" classifications are based on the velocity of explosion, which is directly related to the type of work the explosive can perform. There appears to be no direct relationship between the velocity of explosions and the end products of explosive reactions. These end products are determined primarily by the oxygen balance of the explosive. As in other combustion reactions, a deficiency of oxygen favors the formation of carbon monoxide and unburned organic compounds and produces little, if any, nitrogen oxides. An excess of oxygen causes more nitrogen oxides and less carbon monoxide and other unburned organics. For ammonium nitrate and fuel oil mixtures (ANFO), a fuel oil content of more than 5.5 percent creates a deficiency of oxygen.

There are hundreds of different explosives, with no universally accepted system for classifying them. The classification used in Table 11.3-1 is based on the chemical composition of the explosives, without regard to other to other properties, such as rate of detonation, which relate to the applications of explosives but not to their specific end products. Most explosives are used in two-, three-, or four-step trains that are shown schematically in Figure 11.3-1. The simple removal of a tree stump might be done with a two-step train made up of an electric blasting cap and a stick of dynamite. The detonation wave from the blasting cap would cause detonation of the dynamite. To make a large hole in the earth, an inexpensive explosive such as ammonium nitrate and fuel oil (ANFO) might be used. In this case, the detonation wave from the blasting cap is not powerful enough to cause detonation, so a booster must be used in a three- or four-step train. Emissions from the blasting caps and safety fuses used in these trains are usually small compared to those from the main charge, because the emissions are roughly proportional to the weight of explosive used, and the main charge makes up most of the total weight. No factors are given for computing emissions from blasting caps or fuses, because these have not been measured, and because the uncertainties are so great in estimating emissions from the main and booster charges that a precise estimate of all emissions is not practical.

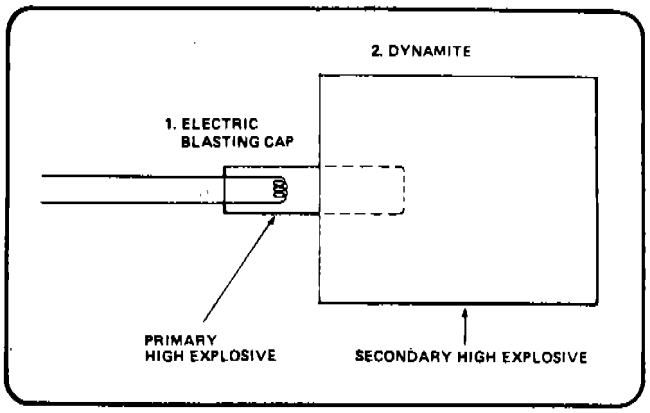

a. Two-step explosive train

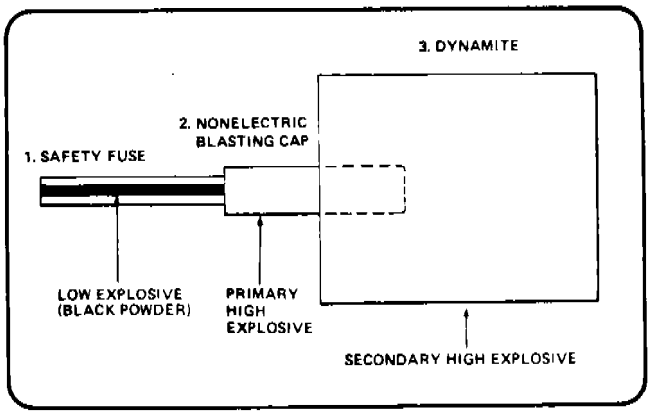

b. Three-step explosive train

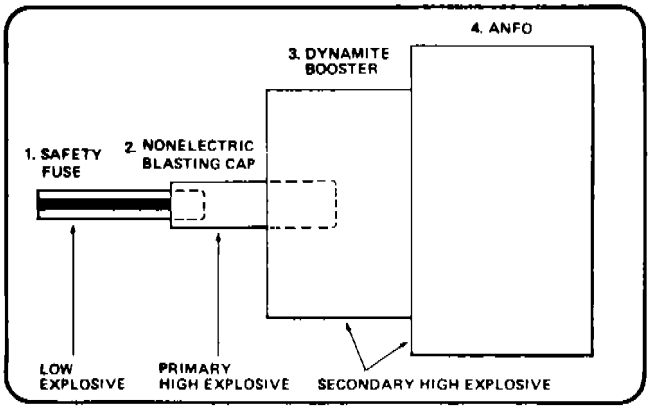

c. Four-step explosive train

Figure 11.3-1. Two-, three-, and four-step explosive trains.

Table 11.3-1. EMISSION FACTORS FOR DETONATION OF EXPLOSIVES (EMISSION FACTOR RATING: D)

Explosive	Composition	Uses	Carbon Monoxide[a]		Nitrogen Oxides[a]		Methane[b]		Other[a]		
			kg/MT	lb/ton	kg/MT	lb/ton	kg/MT	lb/ton	Pollutant	kg/MT	lb/ton
Black powder[2]	75/15/10; potassium (sodium) nitrate/charcoal/sulfur	delay fuses	85 (38-120)	170 (76-240)	NA	NA	2.1 (0.3-4.9)	4.2 (0.6-9.7)	H_2S	12 (0-37)	24 (0-73)
Smokeless Powder[2]	nitrocellulose (sometimes with other materials)	small arms propellant	38 (34-42)	77 (68-84)	NA	NA	0.6 (0.4-0.6)	1.1 (0.7-1.5)	H_2S Pb	10 (10-11) c	21 (20-21) c
Dynamite, Straight[2]	20-60% nitroglycerine/ sodium nitrate/wood pulp/ calcium carbonate	rarely used	141 (44-262)	281 (87-524)	NA	NA	1.3 (0.3-2.8)	2.5 (0.6-5.6)	H_2S	3 (0-7)	6 (0-15)
Dynamite, Ammonia[2]	20-60% nitroglycerine/ ammonium nitrate/sodium nitrate/wood pulp	quarry work stump blasting	32 (23-64)	63 (46-128)	NA	NA	0.7 (0.3-1.1)	1.3 (0.6-2.1)	H_2S	16 (9-19)	31 (19-37)
Dynamite, Gelatin[2]	20-100% nitroglycerine	demolition, construction work, blasting in mines	52 (13-110)	104 (26-220)	26 (4-59)	53 (8-119)	0.3 (0.1-0.8)	0.7 (0.3-1.7)	H_2S SO_2	2 (0-3) 1 (0-8)	4 (0-6) 1 (1-16)
ANFO[4,5]	ammonium nitrate with 5.8-8% fuel oil	construction work, blasting in mines	34	67	8	17	NA	NA	SO_2	1 (0-2)	2 (1-3)
TNT[2]	trinitrotoluene	main charge in artillery projectiles, mortar rounds, etc.	398 (324-472)	796 (647-944)	NA	NA	7.2 (6.6-7.7)	14.3 (13.2-15.4)	NH_3 HCN C_2H_2 C_2H_6	14 (14-15) 13 (11-16) 61 0.5	29 (27-30) 27 (22-32) 121 1.1
RDX[3]	$(CH_2)_3N_3(NO_2)_3$ cyclotrimethylenetrinitroamine	booster	98[d] (2.8-277)	196[d] (5.6-554)	NA	NA	NA	NA	NH_3	22[d] (12-61)	44[d] (24-122)
PETN[2]	$C(CH_2ONO_2)_4$ pentaerythritol tetranitrate	booster	149 (138-160)	297 (276-319)	NA	NA	NA	NA	NH_3	1.3 (0-25)	2.5 (0-5)

a Based on experiments carried out prior to 1930 except in the case of ANFO, TNT and PETN. NA = not available.

b The factors apply to the chemical species, methane. They do not represent total VOC expressed as methane. Studies were carried out more than 40 years ago. NA = not available.

c Greater than 6 mg per 158 grain projectile (0.6 kg/MT, 1.2 lb/ton).

d These factors are derived from theoretical calculations - not from experimental data.

11.3.3 Emissions and Controls [2,4-6]

Carbon monoxide is the pollutant produced in greatest quantity from explosives detonation. TNT, an oxygen deficient explosive, produces more CO than most dynamites, which are oxygen balanced. But all explosives produce measurable amounts of CO. Particulates are produced as well, but such large quantities of particulate are generated in the shattering of the rock and earth by the explosive that the quantity of particulates from the explosive charge cannot be distinguished. Nitrogen oxides (both NO and NO_2) are formed, but only limited data are available on these emissions. Oxygen deficient explosives are said to produce little or no nitrogen oxides, but there is only a small body of data to confirm this. Unburned hydrocarbons also result from explosions, but in most instances, methane is the only species that has been reported.

Hydrogen sulfide, hydrogen cyanide and ammonia all have been reported as products of explosives use. Lead is emitted from the firing of small arms ammunition with lead projectiles and/or lead primers, but the explosive charge does not contribute to the lead emissions.

The emissions from explosives detonation are influenced by many factors such as explosive composition, product expansion, method of priming, length of charge, and confinement. These factors are difficult to measure and control in the field and are almost impossible to duplicate in a laboratory test facility. With the exception of a few studies in underground mines, most studies have been performed in laboratory test chambers that differ substantially from the actual environment. Any estimates of emissions from explosives use must be regarded as approximations that cannot be made more precise, because explosives are not used in a precise, reproducible manner.

To a certain extent, emissions can be altered by changing the composition of the explosive mixture. This has been practiced for many years to safeguard miners who must use explosives. The U. S. Bureau of Mines has a continuing program to study the products from explosives and to identify explosives that can be used safely underground. Lead emissions from small arms use can be controlled by using jacketed soft point projectiles and special leadfree primers.

Emission factors are given in Table 11.3-1.

References for Section 11.3

1. C. R. Newhouser, Introduction to Explosives, National Bomb Data Center, International Association of Chiefs of Police, Gaithersburg, MD (undated).

2. Roy V. Carter, "Emissions from the Open Burning or Detonation of Explosives", Presented at the 71st Annual Meeting of the Air Pollution Control Association, Houston, TX, June 1978.

3. Melvin A. Cook, The Science of High Explosives, Reinhold Publishing Corporation, New York, 1958.

4. R. F. Chaiken, et al., Toxic Fumes from Explosives: Ammonium Nitrate Fuel Oil Mixtures, Bureau of Mines Report of Investigations 7867, U. S. Department of Interior, Washington, DC, 1974.

5. Sheridan J. Rogers, Analysis of Noncoal Mine Atmospheres: Toxic Fumes from Explosives, Bureau of Mines, U. S. Department of Interior, Washington, DC, May 1976.

6. A. A. Juhasz, "A Reduction of Airborne Lead in Indoor Firing Ranges by Using Modified Ammunition", Special Publication 480-26, Bureau of Standards, U. S. Department of Commerce, Washington, DC, November 1977.

TECHNICAL REPORT DATA
(Please read Instructions on the reverse before completing)

1. AP-42 Fourth Edition, Volume I	3. RECIPIENT'S ACCESSION NO.
4. TITLE AND SUBTITLE COMPILATION OF AIR POLLUTANT EMISSION FACTORS, VOLUME I: STATIONARY POINT AND AREA SOURCES	5. REPORT DATE September 1985 6. PERFORMING ORGANIZATION CODE
7. AUTHOR(S)	8. PERFORMING ORGANIZATION REPORT NO.
9. PERFORMING ORGANIZATION NAME AND ADDRESS Source Analysis Section, MDAD (MD 14) Office Of Air Quality Planning And Standards U. S. Environmental Protection Agency Research Triangle Park, NC 27711	10. PROGRAM ELEMENT NO. 11. CONTRACT/GRANT NO.
12. SPONSORING AGENCY NAME AND ADDRESS	13. TYPE OF REPORT AND PERIOD COVERED 14. SPONSORING AGENCY CODE

15. SUPPLEMENTARY NOTES

EPA Editor: Whitmel M. Joyner

16. ABSTRACT

Emission data obtained from source tests, material balance studies, engineering estimates, etc., have been compiled for use by individuals and groups responsible for conducting air pollution emission inventories. Emission factors given in this document cover most of the common stationary and area source emission categories: fuel combustion; combustion of solid wastes; evaporation of fuels, solvents and other volatile substances; various industrial processes; and miscellaneous sources. When no specific source test data are available, these factors can be used to estimate the quantities of pollutants being released from a source or source group.

Volume II of this document provides emission factors for mobile sources, both on and off highway types. This information is available from EPA's Office Of Mobile Sources, 2565 Plymouth Road, Ann Arbor, MI 48105.

17. KEY WORDS AND DOCUMENT ANALYSIS

a. DESCRIPTORS	b. IDENTIFIERS/OPEN ENDED TERMS	c. COSATI Field/Group
Emissions Emission Factors Stationary Sources Area Sources Fuel Combustion Emission Inventories		

18. DISTRIBUTION STATEMENT	19. SECURITY CLASS (This Report)	21. NO. OF PAGES 888
	20. SECURITY CLASS (This page)	22. PRICE

EPA Form 2220-1 (Rev. 4-77) PREVIOUS EDITION IS OBSOLETE

☆ U.S. GOVERNMENT PRINTING OFFICE: 1991-281-724/28459

United States
Environmental Protection
Agency

Office of Air and Radiation
Office of Air Quality Planning and Standards
Research Triangle Park, NC 27711

If your address is incorrect, please change on the above label; tear off; and return to the above address.
If you do not desire to continue receiving this technical report series, CHECK HERE ☐; tear off label; and return it to the above address.