On-Scene Coordinator Phone Book

Fall 2002

EPA
Environmental Protection Agency

542 B 02 099

OERR EMERGENCY RESPONSE CONTACTS

Name	Office/Responsibility	Office Phone
Mark Mjoness	Emergency Response	(703) 603-8727
Rafael Gonzalez	I/IX Center, Director	(703) 603-8892
JoAnn Griffith	II/VI Center, Director	(703) 603-8774
	III/VIII Center, Director	(703) 603-8916
John Cunningham	IV/X Center, Director	(703) 603-8708
Larry Zaragoza	V/VII Center, Director	(703) 603-8867
Paige Peck	Contracts Center, Director	(703) 603-8733
David Lopez	Oil Program Center, Director	(703) 603-8707
Paul Nadeau	Prog. Analysis, Resource Mgmnt. Director	(703) 603-8794
ERT 24-hour Duty Officer		**(732) 321-6660**

HQ REGIONAL COORDINATOR CONTACTS

Name	Region	Office Phone
Craig Beasley	Region I	(703) 603-9015
Craig Beasley	Region II	(703) 603-9015
Nelson Mix	Region III	(703) 603-8775
Terry Eby	Region IV	(703) 603-8741
Ray Worley	Region V	(703) 603-8724
Ray Worley	Region VI	(703) 603-8724
Kevin Mould	Region VII	(703) 603-8728
Kevin Mould	Region VIII	(703) 603-8728
Kevin Mould	Region IX	(703) 603-8728
Terry Eby	Region X	(703) 603-8741
Diana Stalcup	Alternate Contact for Mark Mjoness	(703) 603-8735
RC Duty Officer Cell Phone		**(703) 967-5012**

KEY AGENCY MANAGEMENT

Name	Office	Office Phone
Eileen McGinnis	Administrator's Office	(202) 564-6999
Charlotte Bertrand	Administrator's Office	(202) 564-8374
Bob Bostock	Administrator's Office	(202) 564-2039
Susan Spencer Mulvaney	Administrator's Office	(202) 564-3121
Claudia McMurray	Deputy Administrator's Office	(202) 564-4711
Marianne L. Horinko	Assistant Administrator, OSWER	(202) 566-0200
Tom Dunne	Associate Deputy AA, OSWER	(202) 566-0200
Gayle Rice	Chief of Staff	(202) 566-0186
Mike Cook	Director, OERR	(703) 603-8960
Elaine Davies	Dep. Director, OERR	(703) 603-8960
Debbie Dietrich	Director, CEPPO	(202) 564-8600
Jim Woolford	Director, FFRRO	(703) 603-9089

More "Blue Card" information inside back cover

REGION 00

ENVIRONMENTAL RESPONSE TEAM
B-3
26 W. MLK, Office B-5
Cincinnati, OH 45268

PHONE: (513) 569-7546
FAX: (513) 569-7537
24-HOUR: (732) 321-6660

Gilbert	John M.	Environmental Engineer	(513) 569-7590
Ludmann	Shirley	Secretary	(513) 569-7537
Potoka	Bruce	Environmental Scientist	(513) 569-7038
Powell	Greg W.	Geologist	(513) 569-7533

ENVIRONMENTAL RESPONSE TEAM
MS101
2890 Woodbridge Ave., Bldg. 18
Edison, NJ 08837-3679

PHONE: (732) 321-6740
FAX: (732) 321-6724
24-HOUR: (732) 321-6660

Alexander	Lucille M.	Secretary	(732) 321-6753
Allen	Harry L.	Environmental Scientist	(732) 321-6747
Aquino	Virginia A.	Secretary	(732) 906-6914
Burchette	Sella M.	Biologist	(732) 321-6726
Camacho	JoAnn M.	Environmental Engineer	(732) 906-6916
Campagna	Philip R.	Chemist	(732) 321-6689
Charters	David W.	Ecological Risk Program Mgr	(732) 906-6825
Cibulskis	Robert W.	Environmental Scientist	(732) 321-6746
Coakley	William A.	Chemist	(732) 906-6921
Compton	Harry R.	Environmental Engineer	(732) 321-6751
Greenberg	Marc	Wright State University / IPA	(732) 452-6413
Grohs	Bethany J.	Veterinary Medical Officer	(732) 906-6168
Henry	Richard	U.S. Fish & Wildlife Service	(732) 906-6987
Humphrey	Alan M.	Environmental Scientist	(732) 321-6748
Huston	Mark	U.S. Fish & Wildlife Service	(732) 321-6609
Kastner	Sophie A.	Management Analyst	(732) 906-6967
Lafornara	Joseph P.	Director	(732) 321-6740
Matey	Dale	Environmental Scientist, OERR	(732) 321-4386
Mickunas	David B.	Chemist	(732) 906-6913
Prince	George R.	Environmental Scientist	(732) 321-6649
Schaefer	Joseph	Student Co-op	(732) 906-6920
Simkovich	Dorothy E.	Secretary	(732) 906-6915
Singhvi	Rajeshmal	Chemist	(732) 321-6761
Sprenger	Mark D.	Environmental Scientist	(732) 906-6826
Turpin	Rod	Chief National H&S Advisor	(732) 321-6741
Ur	Nancy D.	Program Analyst	(732) 321-6745
Wright	David P.	Deputy Director	(732) 321-6743
Zownir	Andre P.	Environmental Engineer	(732) 321-6744

ENVIRONMENTAL RESPONSE TEAM – DC
5202G
1200 Pennsylvania Ave NW
Washington, DC 20460

PHONE/FAX: (703) 603-9133
24-HOUR: (732) 321-6660

Fredericks	Scott C.	Biologist	(703) 603-8771

ENVIRONMENTAL RESPONSE TEAM – West
4220 S. Maryland Parkway
Building D, Suite 800
Las Vegas, NV 89119

PHONE: (702) 784-8002
FAX: (702) 784-8001
24-HOUR: (732) 321-6660

Lavergne	Joseph	Program Analyst	(702) 784-8005
Petullo	Colleen	Health Services Specialist	(702) 784-8004
Valdes	Dennisses	Deputy Director	(702) 784-8003
Whiteford	Connie	Secretary	(702) 784-8002

OSWER
5101T
1200 Pennsylvania Ave NW
Washington, DC 20460

FAX: (202) 566-0207

Dunne	Tom	Associate Deputy AA	(202) 566-0200
Horinko	Marianne	Assistant Administrator	(202) 566-0200
Luftig	Steve	Senior Advisor	(703) 603-0048
Rice	Gayle	Chief of Staff	(202) 566-0186

CEPPO
5104A
1200 Pennsylvania Ave NW
Washington, DC 20460

FAX: (202) 564-8222

Dietrich	Debbie	Director	(202) 564-8600
Jones	Kathy	Associate Director	(202) 564-8353
Kalla	Patty	NICT Program Manager	(202) 564-8017

OERR
5201G
1200 Pennsylvania Ave NW
Washington, DC 20460

FAX: (703) 603-9133

Anderson	Phyllis	Special Assistant	(703) 603-8971
Cook	Michael B.	Office Director	(703) 603-8960
Davies	Elaine	Deputy Office Director	(703) 603-8960
Richardson	Gloria	Secretary	(703) 603-8893
Southerland	Elizabeth	Deputy Office Director	(703) 603-8960
Williams	Faith	Secretary	(703) 603-8990

OERR – Community Outreach
5204G
1200 Pennsylvania Ave. NW – 14th Floor
Washington, DC 20460

FAX: (703) 603-9102

Browne	Jennifer	Program Analyst	(703) 603-8922
Wells	Suzanne	Center Director	(703) 603-8863

OERR – Contract Oversight FAX (703) 603-9116
5203G
1200 Pennsylvania Ave. NW – 13th Floor
Washington, DC 20460

Grier	Timothy	Prog. Analyst	(703) 603-8734
Hawkins	Patricia	Env. Protection Specialist	(703) 603-8714
Ortowski	Nancy	Env. Protection Specialist	(703) 603-8785
Peck	Paige	Center Director	(703) 603-9048
Rauscher	Joseph	EPS/Grants Expert	(703) 603-9073
Williford	Esther	Env. Protection Specialist	(703) 603-8743

OERR – Emergency Response Center FAX: (703) 603-9133
1200 Pennsylvania Ave. NW – 12th Floor
Washington, DC 20460

Beasley	Craig	Regional Coordinator (1,2)	(703) 603-9015
Boynton	Lisa	Env. Protection Specialist	(703) 603-9052
Burgan	Karen	Env. Protection Specialist	(703) 603-9917
Duteau	Helen	ECOT Team Leader	(703) 603-8761
Eby	Terry	Regional Coordinator (4,10)	(703) 603-8741
Mjoness	Mark	Acting Center Director	(703) 603-8727
Mix	Nelson	Regional Coordinator (3)	(703) 603-8775
Mould	Kevin	Regional Coordinator (7,8,9)	(703) 603-8728
Previ	Caroline	Program Analyst	(703) 603-9003
Schumann	Jean	Env. Protection Specialist	(703) 603-8887
Shubert	Jan	Env. Protection Specialist	(703) 603-8737
Stalcup	Dana	Alternate Contact for Mark M.	(703) 603-8735
Worley	Ray	Regional Coordinator (5,6)	(703) 603-8724

OERR – Emergency Response Center, Cincinnati FAX: (513) 487-2050
NWD
26 W. MLK
Cincinnati, OH 45268

Kirby	Carole	SEE	(513) 487-2062
Koch	Natalie	Program Analyst	(513) 487-2062

OERR – Human & Organizational Services FAX: (703) 603-9133
5202G
1200 Pennsylvania Ave. NW – 12th Floor
Washington, DC 20460

Jacanin	Mary	Center Director	(703) 603-8753

OERR – Information Management Center FAX: (703) 603-9133
5202G
1200 Pennsylvania Ave. NW – 12th Floor
Washington, DC 20460

Cullen	Michael	Center Director	(703) 603-8881
Curtis	Mary	Management Analyst	(703) 603-8882

OERR – Oil Program FAX: (703) 603-9116
5203G
1200 Pennsylvania Ave. NW – 13th Floor
Washington, DC 20460

Davis	Barbara	Env. Health Scientist	(703) 603-8823
Fleischman	Hugo	Env. Prot. Specialist	(703) 603-8769
Howard	Mark	Environmental Scientist	(703) 603-8715
King	Gloria	SEE	(703) 603-9074
Lee	Lori	Env. Prot. Specialist	(703) 603-8866
Lopez	David	Center Director	(703) 603-8707
Nichols	Nick (Wm.)	Env. Prot. Specialist	(703) 603-9918
Oliveira	Beatriz	Env. Prot. Specialist	(703) 603-1229
Williams	Jannie	Program Assistant	(703) 603-8742

OERR – Program Analysis and Resource Management
5203G
1200 Pennsylvania Ave. NW – 13th Floor
Washington, DC 20460

Flaks	Art	Branch Chief	(703) 603-9088
Nadeau	Paul	Center Director	(703) 603-8794
Weiner	Janet	Attorney/Advisor	(703) 603-8717

OERR – REGION 1/9 FAX: (703) 603-9100
5204G
1200 Pennsylvania Ave. NW – 14th Floor
Washington, DC 20460

Gonzalez	Rafael	Center Director	(703) 603-8892
Hurd	Michael	Chemist	(703) 603-8836
Jeng	Richard	Regional Coordinator	(703) 603-8749

OERR – REGION 2/6 FAX: (703) 603-9133
5202G
1200 Pennsylvania Ave. NW – 12th Floor
Washington, DC 20460

Griffith	Joann	Center Director	(703) 603-8774
Johnson	Terri	Regional Coordinator	(703) 603-8118

OERR – REGION 3/8 FAX: (703) 603-9100
5204G
1200 Pennsylvania Ave. NW – 14th Floor
Washington, DC 20460

Hopkins	Tracy	Env. Protection Specialist	(703) 603-8788
Laskowski	Gil	Program Analyst	(703) 603-8719

OERR – REGION 4/10 FAX: (703) 603-9104
5204G
1200 Pennsylvania Ave. NW – 14th Floor
Washington, DC 20460

Cattall	Robert	SEE	(703) 603-9054
Cunningham	John	Center Director	(703) 603-8708
Harris	John	Senior Env. Prot. Specialist	(703) 603-9053
Zeller	Elizabeth	Senior Env. Prot. Specialist	(703) 603-8780

OERR – REGION 5/7 FAX: (703) 603-9133
5202G
1200 Pennsylvania Ave. NW – 14th Floor
Washington, DC 20460

Zaragoza	Larry	Center Director	(703) 603-8867

OERR – State/SI FAX: (703) 603-9104
5204G
1200 Pennsylvania Ave. NW – 14th Floor
Washington, DC 20460

Evans	Dave	Center Director	(703) 603-8885

TECHNOLOGY INNOVATION OFFICE FAX: (703) 603-9135
5102G
1200 Pennsylvania Ave NW - 13th Floor
Washington, DC 20460

Crumbling	Deana	TRIAD, Site Caracterization	(703) 603-0643
Cummings	Jim	Thermal Technologies	(703) 603-7197
De Kay	Thomas	International Markets	(703) 603-7193
Dickens	Melinda	Funds Certification	(703) 603-7187
Eleanor	Ann	Exhibits, OSWER Awards	(703) 603-7199
Fiedler	Linda	Bio/Phytorem., S/S, As, MTBE	(703) 603-7194
Heimerman	Jeff	Staff Director	(703) 603-7191
Kingscott	John	Staff Director	(703) 603-7189
Kovalick, Jr.	Walter	Director	(703) 603-9910
Madalinski	Kelly	Treatm. Costs, Cont., Sedim.	(703) 603-9901
Lapka	Joseph	Perchlorates	(703) 603-9903
Pachon	Carlos	CLUIN.ORG, Waste Treatm.	(703) 603-9904
Powell	Daniel	Brownfields, Monitoring Tech.	(703) 603-7196
Quander	John	Technology Support	(703) 603-7198
Self	Arthur	Support Staff	(703) 603-0271
Smith	Naomie	Program Analyst	(703) 603-7186
Steimle	Richard	Ground Water, Dry Cleaners	(703) 603-7195
Turner	Gary	Training, CEC, OSC Readin.	(703) 603-9902
Yager	Kathleen	Groundwater, Pump &Treat	(617) 918-8362

RESPONSE AND PREVENTION BRANCH - 2ERR
2ERR
2890 Woodbridge Avenue
Edison, NJ 08837-3679

FAX: (732) 321-4425
24-HOUR: (800) 424-8802
RRC-Desk: (732) 321-4370

Anderson	Arlene	OSC	(732) 906-6803
Banner	Ellen	OSC	(732) 321-4348
Bechtel	Jeff	OSC	(732) 906-6807
Brescio	Michael	OSC	(732) 321-6664
Camp	Kimberly J.	OSC	(732) 452-6415
Chong	Margaret	OSC	(732) 906-6904
Clifford	Curtis	Field Adm Specialist	(732) 321-6646
D'Onofrio	Cris A.	OSC	(732) 906-6977
Dalcia	James	Emergency Resp Team Ldr	(732) 906-6907
Daly	Eric	OSC	(732) 321-4350
DeAngelis	Greg	OSC	(732) 906-6874
Dease	Bobby	Field Adm Specialist	(732) 906-6893
Ferriola	Mike	OSC	(732) 321-4342
Gallo	Mark	OSC	(732) 906-6871
Glenn	Keith C.	OSC	(732) 321-4454
Guarneiri	Lisa	START DPO	(732) 906-6180
Harrington	Dwayne	OSC	(732) 906-6899
Higgins	John	Section Chief	(732) 906-6194
Hodanish	Michael	OSC	(732) 321-4372
Jimenez	Christopher	OSC	(732) 906-6847
Kahn	Paul	OSC	(732) 321-6617
Kodama	Doug	Oil Program Team Leader	(732) 906-6905
Koester	Paul	Field Adm. Specialist	(732) 906-6964
Norrell	Neil	OSC	(732) 321-4357
Pellegrino	Carlos	OSC	(732) 321-6794
Perera	Dilshad	OSC	(732) 321-4356
Savedoff	Mark	CERCLIS Coordinator	(732) 321-4341
Solecki	Michael	OSC	(732) 906-6918
Sprague	Bruce	Branch Chief	(732) 321-6656
Touw	Steven	OSC	(732) 906-6900
Ulshoefer	John	Chem. Em Prep. Coord.	(732) 321-6620
Vogelsang	Norman	ERRS PO	(732) 321-4346

EMERGENCY and REMEDIAL RESPONSE DIVISION
2890 Woodbridge Avenue
Edison, NJ 08837-3679

FAX: (732) 906-6182
Ombudsman 24-HOUR: (888) 283-7626

Freeman	Martin	Deputy Omb	(732) 906-6933
Zachos	George	Integr Mgr & Omb	(732) 321-6621

GRANTS & CONTRACT MANAGEMENT BRANCH
290 Broadway
New York, NY 10007-1823

FAX: (212) 637-3410

Riverso	Ted	Chief, Contracts Section	(212) 637-3368
Tao	Anthony	Contracting Officer	(212) 637-3372
Weaver	Kevin	Contracting Officer	(212) 637-3357

REMOVAL BRANCH
3HS30
1650 Arch Street
Philadelphia, PA 19103-2029

FAX: (215) 814-3254
24-HOUR: (215) 814-3255

Carney	Dennis	Acting Deputy Division Director	(215) 814-3241
Graham	Walter	CT Planner	(215) 814-3146
Schaul	Peter	Acting Branch Chief	(215) 814-3183

REMOVAL RESPONSE SECTION – PHILA
3HS31
1650 Arch Street
Philadelphia, PA 19103-2029

FAX: (215) 814-3254
24-HOUR: (215) 814-3255

Aquino	Marcos	OSC	(215) 814-3422
Bartos	Myles	OSC	(215) 814-3342
Boyd	Kevin	OSC	(215) 814-3418
Fox	Doug	OSC	(215) 814-3262
Gaughan	Perry	OSC	(215) 814-3282
Ham	Gregory	OSC	(215) 814-3194
Jarvela	Stephen	OSC	(215) 814-3259
Kelly	Jack	OSC	(215) 814-3112
Kelly	Robert	OSC	(215) 814-3268
Kleeman	Charles	Section Chief	(215) 814-3257
Rupert	Rich	OSC	(215) 814-2879
Taurino	Michael	OSC	(215) 814-3371
Towle	Mike	OSC	(215) 814-3272
Zenone	Vincent	OSC	(215) 814-3267
Zickler	Michael	OSC	(215) 814-2792

REMOVAL ENFORCEMENT SECTION – PHILA
3HS32
1650 Arch Street
Philadelphia, PA 19103-2029

FAX: (215) 814-3254
24-HOUR: (215) 814-3255

Arena	Joe	OSC	(215) 814-3278
Burns	Fran	Section Chief	(215) 814-3245
Guarni	Bob	OSC	(215) 814-3269
Lapsley	Glen	OSC	(215) 814-3279
Sharma	Raj	OSC	(215) 814-3260
Welsh	Mike	OSC	(215) 814-3285

PREP & PROGRAM SUPPORT SECTION – PHILA
3HS33
1650 Arch Street
Philadelphia, PA 19103-2029

FAX: (215) 814-3254
24-HOUR: (215) 814-3255

Heston	Jerry	Section Chief	(215) 814-3273
Marzulli	Linda	RRC Coordinator	(215) 814-3256
McDonald	Joanna	FAS	(215) 814-3251
Steuteville	Bill	ERRS PO	(215) 814-3264
Willliams	Jackie	ERRS & START DPO	(215) 814-3248
Wodarczyk	Karen	START PO	(215) 814-2336
Wright	James R.	FAS	(215) 814-3250

REMOVAL RESPONSE SECTION – WV
1060 Chapline Street, Suite 303
Wheeling, WV 26003-2995

FAX: (304) 234-0259
24-HOUR: (215) 814-3255

Downie	Jack	OSC	(304) 234-0255
Easton	Marjorie	OSC	(304) 234-0251

REMOVAL ENFORCEMENT SECTION – WV
1060 Chapline Street, Suite 303
Wheeling, WV 26003-2995

FAX: (304) 234-0259
24-HOUR: (215) 814-3255

Carlson	Debbie	OSC	(304) 234-0249
Matlock	Dennis	OSC	(304) 234-0284

PREP & PROGRAM SUPPORT SECTION – WV
1060 Chapline Street, Suite 303
Wheeling, WV 26003-2995

FAX: (304) 234-0259
24-HOUR: (215) 814-3255

Messimer	Rich	FAS	(304) 234-0239
Powell	Marty	CT Program Coordinator	(304) 234-0252

REMOVAL RESPONSE SECTION – VA
c/o Virginia DEQ
629 E. Main Street
Richmond, VA 23219

FAX: (215) 814-3254
24-HOUR: (215) 814-3255

Wagner	Christine	OSC	3HS 31	(804) 833-9440

REMOVAL RESPONSE SECTION – PA
c/o PA DEP
4530 Bath Pike
Bethlehem, PA 18017-2070

FAX: (610) 861-2072
24-HOUR: (215) 814-3255

Fetzer	Rich	OSC	3HS31	(610) 861-2087

REGION 4

EMERGENCY RESPONSE & REMOVAL BRANCH
ERRB
61 Forsyth St.
Atlanta, GA 30303-3104

FAX: (404) 562-8699
24-HOUR: (404) 562-8700

Adams	Glenn	OSC	(404) 562-8771
Andrews	David L.	OSC	(404) 562-8763
Bass	Brook	OSC	(404) 562-8770
Bittinger	Bob	RRC Coordinator	(404) 562-8706
Brannen	Larry	OSC	(404) 562-8723
Buerki	Karen	OSC	(404) 562-8747
Caprita	Barbara	OSC	(404) 562-8720
Davidson-Norris	Ruth	OSC Support	(404) 562-8753
Dixon	Warren	OSC	(404) 562-8739
Dorian	David	OSC	(404) 562-8767
Duty OSC	Region 4	OSC	(404) 562-8705
Eger	Chuck	Contingency Planner	(404) 562-8741
Foree	Gerald	OSC	(404) 562-8850
Franco	Ben	OSC	(404) 562-8758
Geraghty	Carol	OSC	(404) 562-8934
Goff	Gordon	Contingency Planner	(404) 562-8765
Hitchcock	Shane	Section Chief	(404) 562-8718
Ingraldi	Joe	OSC Support	(404) 562-8775
Jardine	Rick	OSC	(404) 562-8764
Jones	Katrina	OSC	(404) 562-8811
Knight	Karen	OSC	(404) 562-8885
Lair	Doug	Branch Chief	(404) 562-8721
Misenhemier	Kevin	OSC	(404) 562-8922
Moore	Tony	OSC	(404) 562-8756
Neal	Tim B.	OSC	(404) 562-8796
Negron	Jose	OSC	(404) 562-8754
Rasnick	Keri	OSC Support	(404) 562-8736
Rigger	Don	Section Chief	(404) 562-8744
Rosen	Robert	OSC	(404) 562-8761
Runge	Roberta	OSC	(404) 562-8755
Scott	Helen	OSC Support	(404) 562-8746
Stroud	Fred	OSC	(404) 562-8751
Taylor	Matt	Section Chief	(404) 562-8759
Walden	Ted	OSC	(404) 562-8752
Webster	Jim	OSC	(404) 562-8769
Williamson	Carter	OSC	(404) 562-8742

EMERGENCY RESPONSE & REMOVAL
Ed Jones Federal Building Suite B13
109 South Highland Avenue
Jackson, TN 38301

FAX: (731) 422-1232
24-HOUR: (404) 562-8700

Spurlin	Steve	OSC	(731) 422-0101

EMERGENCY RESPONSE & REMOVAL
Suite 7 West
701 Sand Marl Boulevard (starting Feb. 2003)
Jacksonville FL 32207
FAX: (___) ___-____
24-HOUR: (404) 562-8700

Nolen	John	OSC	(through Jan.2003) (404) 562-8750

EMERGENCY RESPONSE & REMOVAL
Ramano L. Mazzoli Federal Building, Room 216
600 MLK Jr. Place
Louisville, KY 40202
FAX: (502) 582-5268
24-HOUR: (404) 562-8700

Smith	Art	OSC	(502) 582-5161

EMERGENCY RESPONSE & REMOVAL (AT USCG GULF STRIKE TEAM)
Aviation Training Center
8501 Tanner Williams Road
Mobile, AL 36608
FAX: (251) 441-6610
24-HOUR: (404) 562-8700

Ullock	Dean	OSC	(251) 441-5913

EMERGENCY RESPONSE & REMOVAL
MD-81
4930 Old Page Rd.
Research Triangle Park, NC 27709
FAX: (919) 541-1511
24-HOUR: (404) 562-8700

Fitzsimmons	Charles	OSC	(919) 541-1939

EMERGENCY RESPONSE & REMOVAL
U.S. EPA South Florida Office
400 North Congress Ave., Suite 120
West Palm Beach, FL 33401
FAX: (561) 615-6959
24-HOUR: (404) 562-8700

Stilman	Terry	OSC	(561) 616-8880

CERCLA PROGRAM SERVICES BRANCH
Contracts Management Unit
61 Forsyth St.
Atlanta, GA 30303-3104
FAX : (404) 562-8842

Johnson	Dora Ann	ERCS PO	(404) 562-8737
Monsees	Matthew	START PO	(404) 562-8749

EMERGENCY RESPONSE BRANCH
SE-5J
77 W. Jackson
5th Floor
Chicago, Il 60604-3507

FAX: (312) 353-9176
24-HOUR: (312) 353-2318

Benning	Bradley	OSC	(312) 353-7613
Bolen	Bill	Section Chief	(312) 353-6316
Borries	Sam	OSC	(312) 353-2886
Boseman	Anita	OSC	(312) 886-6941
Brasher	Charlie	OSC	(312) 886-7196
Cook	Tom	OSC	(312) 886-7182
Emmanouil	Stavros	OSC	(312) 886-1768
Faryan	Steven	OSC	(312) 353-9351
Gebien	Charles	OSC	(312) 353-7645
Geishecker	Tom	Special Projects Coordinator	(312) 886-0755
Harris	Mike	OSC	(312) 886-0760
Karl	Rick	Branch Chief	(312) 353-9295
Kosik	Lorraine	START PO	(312) 886-7580
Kush	Bev	Section Chief	(312) 353-8200
Lavis	Betty	OSC	(312) 886-7183
Lee	Barbi	OSC	(312) 886-5296
Micke	Fredrick	OSC	(312) 886-5123
Mitchell	James	OSC	(312) 353-9537
Nabasny	Gail	ERRS PO	(312) 353-1056
Nachowicz	Linda	Section Chief	(312) 886-6337
Nied	Walter	OSC	(312) 886-4466
Norman	Carl	ERRS PO	(312) 886-5495
Rhame	Kenneth	OSC	(312) 353-6720
Ribordy	Mike	OSC	(312) 886-4592
Simes	William	OSC	(312) 886-3337
Simon	Verneta	OSC	(312) 886-3601
Theisen	Kenneth	OSC	(312) 886-1959
Thomas	Craig	OSC	(312) 886-5907
Vendl	Karen	OSC	(312) 886-7194
Whelan	Ann	Planning	(312) 886-7258
Zintak	Leonard	OSC	(312) 886-4246

EMERGENCY RESPONSE BRANCH – Response Section 1
SE-G1
9311 Groh Road
Grosse Ile, MI 48138-1697

FAX: (734) 692-7677
24-HOUR: (312) 353-2318

Dollhopf	Ralph	OSC	(734) 692-7682
El-Zein	Jason	Section Chief	(734) 692-7661
Gulch	Jon J.	OSC	(734) 692-7686
Jaster	Michelle	OSC	(734) 692-7683
Justice	James J.	OSC	(734) 692-7687
Kelly	Brian	OSC	(734) 692-7684
Kimble	Jeff W.	OSC	(734) 692-7688
Lall	Partap	OSC	(734) 692-7685
Powers	Ross	OSC	(734) 692-7681

EMERGENCY RESPONSE BRANCH – Response Section 1
ME-W
25089 Center Ridge Road
Westlake, OH 44145-4114

FAX: (440) 250-1750
24-HOUR: (312) 353-2318

Augustyn	James	OSC	(440) 250-1742
Durno	Mark	OSC	(440) 250-1743
Fredle	Joseph	OSC	(440) 250-1740
Stimple	Brad	OSC	(440) 250-1717

EMERGENCY RESPONSE BRANCH – Cintl
B-5
26 West Martin Luther King Blvd., Office B-2
Cincinnati, OH 45268

FAX: (513) 569-7546
24-HOUR: (312) 353-2318

Renninger	Steve	OSC	(513) 569-7539

EMERGENCY RESPONSE BRANCH – So. IL
Crab Orchard National Wildlife
8588 Route 148
Marion, Il 62959

FAX: (618) 998-0425
24-HOUR: (312) 353-2318

Turner	Kevin	OSC	(618) 997-0115

EMERGENCY RESPONSE BRANCH – MN
(To be opened soon)_____

FAX: (___) ___-____
24-HOUR: (312) 353-2318

Vega	Sonja	OSC	(312) 886-7191

REGION 6

RESPONSE AND PREVENTION BRANCH
6SF-R
Superfund Division
1445 Ross Avenue, 10th Floor
Dallas, TX 75202-2733

FAX: (214) 665-7447
24-HOUR: (888) 372-7745

Broyles	Ragan	Deputy Branch Chief	(214) 665-2284
Clark	Kenneth	OSC	(214) 665-6774
Cooper	Wallace	OSC	(214) 665-6495
Engblom	Rita	OSC	(214) 665-8341
Fife	Greg	OSC	(214) 665-6773
Fisher	Charles	OSC	(214) 665-2224
Foster	Althea	OSC	(214) 665-2268
Franklin	Richard	OSC	(214) 665-2785
Gazda	Charles	Branch Chief	(214) 665-2270
Hammack	Patrick	OSC	(214) 665-2214
Hansen	Carolyn	EPS	(214) 665-2265
Harris	Scott	OSC	(214) 665-7114
Jones	Nancy	OSC	(214) 665-8041
Josiam	Raji	OSC	(214) 665-8529
Martin	John	OSC	(214) 665-6748
Mason	Steve	OSC	(214) 665-2292
McCormick	Karen	OSC	(214) 665-8365
Moore	Gary	OSC	(214) 665-6609
Mullins	Jim	Removal Team Leader (Oil)	(214) 665-2273
Petersen	Chris	Removal Team Leader (CRCLA)	(214) 665-2275
Robinson	Kathleen	EPS	(214) 665-2252
Ruhl	Chris	OSC	(214) 665-7356
Smith	Donald	OSC	(214) 665-6489
Staves	Jim	Detail UT Dallas	(214) 665-6485
White	Amy	OSC	(214) 665-6449

REMOVALTEAM SOUTH
6MD-H
Superfund Division
10625 Fallstone Road
Houston, TX 77099

FAX: (281) 983-2248
24-HOUR: (888) 372-7745

Zehner	Warren	OSC	(281) 983-2229

SUPERFUND MANAGEMENT BRANCH
6SF-P
1445 Ross Avenue, 10th Floor
Dallas, TX 75202-2733

FAX: (214) 665-7447

Carter	Linda	START PO	(214) 665-6665
Gee	Jo Ann	ERRS PO	(214) 665-8138
Thompson	Hank	START PO (Alt)	(214) 665-2251

REGION 7

SUPERFUND DIVISION (SUPR)
901 North 5th Street
Kansas City, KS 66101

FAX: (913) 551-7063

Jirka	Andrea	Deputy Director	(913) 551-7799
Stafford	Larry	ERCS Project Officer	(913) 551-7394

EMERGENCY RESPONSE AND REMOVAL BRANCH
SUPR/ER&R
Superfund Division
901 North 5th Street
Kansas City, KS 66101

FAX: (913) 551-7948
24-HOUR: (913) 281-0991

Crossland	Roy	Project Officer	(913) 551-7965
Davis	Joe	OSC	(913) 551-7909
Doherty	Paul	OSC	(913) 551-7924
Ferguson	Doug	OSC	(913) 551-7221
Hayes	Scott	OSC	(913) 551-7670
Jackson	Robert	Branch Chief	(913) 551-7952
Kroone	Janice	OSC	(913) 551-7005
MacDonald	Jim	OSC	(913) 551-7767
Moore	David	OSC	(913) 551-7450
Ngo	Huu	OSC	(913) 551-7536
Schmaedick	Manuel A.	OSC	(913) 551-7449
Shademan	Randy J.	OSC	(913) 551-7331
Singletary	Antoinette	Financial Analyst	(913) 551-7491
Thomas	Mark	OSC	(913) 551-7937
Weatherford	Jeff	OSC	(913) 551-7695

ENFORCEMENT / FUND LEAD REMOVAL BRANCH
SUPR / EFLR
Superfund Division
901 North 5th Street
Kansas City, KS 66101

FAX: (913) 551-7948
24-HOUR: (913) 281-0991

Buchholz	Ken	Branch Chief	(913) 551-7473
Burnett	Bryant	OSC/MO State Coord.	(913) 551-7742
Curry	Tim	OSC/NE State Coord.	(913) 551-7636
Francisco	Curtis	OSC	(913) 551-7796
Garvey	Daniel	OSC	(913) 551-7600
Hamera	Don	OSC/IA State Coord.	(913) 551-7818
Larson	Kevin	OSC	(913) 551-7808
Lininger	Don	OSC/KS State Coord.	(913) 551-7724
Nold	Eric	OSC	(913) 551-7488
Rapplean	Ken	OSC	(913) 551-7769
Singletary	DeAndre	OSC	(913) 551-7373
Smith	James Heath	OSC	(913) 551-7903
Williams	David	OSC	(913) 551-7625

EMERGENCY RESPONSE AND REMOVAL BRANCH
97 North Outer Road
Eureka, MO 63025

FAX: (314) 215-0228
24-HOUR: (913) 281-0991

Silver	Jim	OSC	(636) 587-9895

REGION 8

PREP, ASSESSMENT AND EMERGENCY RESPONSE
ECOSYSTEMS PROTECTION and REMEDIATION
8EPR-ER
999 18th St., Suite 300
Denver, CO 80202-2466

FAX: (303) 312-6962
24-HOUR: (303) 293-1788

Ackerman	Joyce	OSC	(303) 312-6822
Chau	Shun-Ping	OSC	(303) 312-6848
Griswold	Hays	OSC	(303) 312-6809
Hawthorn	Steve	Supervisor Emer. Resp. Unit	(303) 312-6061
Knoy	James	OSC	(303) 312-6838
Lange	Al	OSC	(303) 312-6987
McKeown	John	OSC	(303) 312-6831
Miller	Johanna	OSC	(303) 312-6804
Myers	Craig L.	OSC	(303) 312-7067
Nguyen	Duc	OSC	(303) 312-6509
Nguyen	Tien	OSC	(303) 312-6820
Peronard	Paul	OSC	(303) 312-6808
Romero	David J.	OSC	(303) 312-6572
Rosas	Melissa	Project Support	(303) 312-6511
Skie	Doug	Director	(303) 312-6827
Stevenson	Peter	OSC	(303) 312-6799
Way	Steven	OSC	(303) 312-6723
Wolf	Martha	OSC	(303) 312-6839
Zimmerman	Mike	OSC	(303) 312-6828

REGION 9

RESPONSE PLANNING AND ASSESSMENT BRANCH
EMERGENCY RESPONSE SECTION
SFD-9-2
Superfund Division
75 Hawthorne Street
San Francisco, CA 94105

FAX: (415) 947-3518
24-HOUR: (415) 947-4400

Allen	Harry L. IV	OSC	(415) 972-3063
Brown	Ivana	START PO	(415) 972-3045
Calanog	Steve	OSC	(415) 972-3075
Calhoon	Mark	Investigator	(415) 972-3090
Dunkleman	Tom	OSC	(775) 687-9480
Ficklin	Hedy	OSC	(415) 972-3046
Guria	Peter	Section Chief	(415) 972-3043
Jaros	John	Investigator	(415) 972-3058
Lee	Barbara	ERRS PO	(415) 972-3195
Lewis	William	OSC	(415) 972-3042
Mandel	Bob	OSC	(415) 972-3040
Martyn	Richard	OSC	(415) 972-3038
Meer	Daniel	Branch Chief	(415) 972-3132
Moxley	Bret	OSC	(415) 972-3114
Rogow	Michelle	OSC	(415) 972-3082
Shane	Daniel	OSC	(415) 972-3037
Shipley	Brad	OSC	(415) 972-3011
Suter	Dan	OSC	(415) 972-3050
Temple	Celeste	START Alt PO	(415) 972-3051
Weden	Chris	OSC	(415) 972-3041
Yocum	Janet	OSC	(415) 972-3053
Zuroski	Donn	OSC	(415) 972-3035

EMERGENCY RESPONSE SECTION
(To be opened soon)_____
_____
_____
Los Angeles, CA

FAX: (___) ___-____
24-HOUR: (___) ___-____

_____ _____ _____ (___) ___-____

REGION 10

EMERGENCY RESPONSE and CLEANUP UNIT
ECL-116
1200 6th Avenue, 11th Floor
Seattle, WA 98101-3123

FAX: (206) 553-0175
24-HOUR: (206) 553-1263

Barber	Anthony	OSC	(206) 553-2136
Boykin	Michael	OSC	(206) 553-6362
Field	Chris	Removal Manager	(206) 553-1674
Kitz	Carl	OSC	(206) 553-1671
Longston	William	OSC	(206) 553-1679
Nickels	Sharon	Project Officer	(206) 553-6644
Rees	David	OSC	(206) 553-1808
Rodin	Jeffry	OSC	(206) 553-6709
Sheldrake	Beth	Northwest Area Planner	(206) 553-0220
Sibley	Mike	OSC	(206) 553-1886
Smith	Andy	OSC	(206) 553-1750
Szerlog	Mike	OSC	(206) 553-0279

EPA ALASKA OPERATIONS OFFICE
222 W. 7th Ave., #19, Room 520
Anchorage, AK 99513-7588

FAX: (907) 271-3424
24-HOUR: (206) 553-1263

Carr	Matthew	OSC	(907) 271-3616
Goolie	Mary	Alaska Area Planner	(907) 271-3414
Lautenberger	Carl	OSC	(907) 257-1342

OREGON OPERATIONS OFFICE
811 SW Sixth Avenue
Portland, OR 97132

FAX: (503) 326-3399
24-HOUR: (206) 553-1263

Callaghan	Marc	OSC	(503) 326-2917
Heister	Dan	OSC	(503) 326-6869

IDAHO OPERATIONS OFFICE
1435 Orchard Street
Boise, ID 83706

FAX: (208) 334-1231
24-HOUR: (206) 553-1263

Weigel	Greg	OSC	(208) 378-5773

COEUR D'ALENE FIELD OFFICE
1910 Northwest Blvd.
Coeur d'Alene ID 83814

FAX: (208) 664-5829
24-HOUR: (206) 553-1263

Liverman	Earl	OSC	(208) 664-4858

UNITED STATES COAST GUARD

USCG ATLANTIC STRIKE TEAM FAX: (609) 724-0232
P.O. Box 68
Fort Dix, NJ 08640

Commander	AST	Commanding Officer	(609) 724-0008

USCG GULF STRIKE TEAM FAX: (205) 694-661C
Aviation Training Center
8501 Tanner Williams Road
Mobile, AL 36608

Commander	GST	Commanding Officer	(205) 639-6601

USCG PACIFIC STRIKE TEAM FAX: (415) 883-7814
HANGER #2
Novato, CA 94949-5086

Commander	PST	Commanding Officer	(415) 883-3311

USCG STRIKE TEAM COORDINATION CENTER FAX: (252) 331-6012
1461North Road Street (Hwy 17N)
Elizabeth City, NC 27909

Commander	Commander in Charge	(252) 331-600(

USCG NATIONAL POLLUTION FUNDS CENTER- CX FAX: (703) 235-4837
Arlington, VA 22203-1804

Chief, Case Management	(202) 493-672'
Chief, Financial Management	(202) 493-680(
Chief, Claims	(202) 493 683(

RESOURCES

Site Name	URL	Description
The Training Exchange	http://www.trainex.org	Lists EPA Training Courses, e.g. NETI, TIO, ERTP, etc.
Clu-In	http://www.clu-in.org	EPA Site Characterization and Remediation Information Site
ERT Homepage	http://www.ert.org	Environmental Response Team Center Homepage
FRTR	http://www.frtr.gov	Federal Remediation Technologies Roundtable
SITE	http://www.epa.gov/ORD/SITE/	Superfund Innovative Technoloy Evaluation
ATSDR Homepage	http://www.atsdr.cdc.gov/	Agency for Toxic Substances and Disease Registry
SKC Air Methods Index	http://www.skcinc.com	Contains links to Air Sampling Method guides
Test Methods Index	http://www.epa.gov/NE/oarm/testmeth.pdf	Analytical Methods Index (sorted by method number AND by chemical)
NIOSH Pocket Guide	http://www.cdc.gov/niosh/npg/npg.html	NIOSH Pocket Guide On-line (or downloadable)
TOXFAQS	http://www.atsdr.cdc.gov/toxfaqs.html	ATSDR Chemical ToxFaqs
Tox Profiles	http://www.atsdr.cdc.gov/toxpro2.html	ATSDR Chemical Toxicological Profiles
Bioterrorism Homepage	http://www.bt.cdc.gov	CDC Public Health Emergency Preparedness and Response
TIO	http://www.epa.gov/swertio1/	EPA's Superfund Technology Innovation Office
NCEPI	http://www.epa.gov/ncepi/	EPA's National Service Center for Environmental Publications (800) 490-9198
EPA OSC Homepage	http://www.epaosc.org	By OSCs for OSCs...
OSC Readiness	http://oscreadiness.org	Reviews and Previews

ADDITIONAL NUMBERS and NOTES

CHECK OUT THE ONLINE OSC PHONE BOOK AT

www.epaosc.org
www.ert.org

SUBMIT ANY CHANGES OR CORRECTIONS AT
www.ert.org

EPA Environmental Protection Agency

LIST OF TABLES (Continued)

		Page
14-1	Aggregation of Field Duplicates	14-25
14-2	Aggregation of Grab Samples	14-26
14-3	Aggregation of Data Across Streams	14-27
14-4	Cases where Option Variability Factors Could Not be Calculated	14-28
15-1	Summary of Current and Incremental Energy Requirements and Sludge Generation by Subcategory	15-12
15-2	Incremental Energy Requirements by Subcategory and Option	15-13
15-3	Incremental Sludge Generation by Subcategory and Option	15-14
16-1	40 CFR Part 420 - Subcategorization	16-22
16-2	40 CFR Part 420 - Process and Non-Process Wastewaters	16-25
16-3	Example 1: Application of 40 CFR Part 420 - Direct Discharge Blast Furnaces and Sinter Plant	16-27
16-4	Example 2: Application of 40 CFR Part 420 - Indirect Discharge Coke Plant	16-28
16-5	List of Approved Test Methods for Pollutants Regulated Under the Final Rule for the Iron and Steel Point Source Category	16-29

LIST OF FIGURES

		Page
5-1	Iron and Steelmaking Operations	5-25
5-2	Forming and Finishing Operations	5-26
5-3	Integrated Steel Manufacturing Sites	5-27
5-4	Cokemaking Sites	5-28
5-5	By-Product Recovery Cokemaking Process Diagram	5-29
8-1	Illustration of a Fluidized Bed Acid Regeneration Process	8-47
8-2	Typical Free and Fixed Ammonia Distillation Column	8-48
8-3	Typical Cooling Tower	8-49
8-4	Typical Oil/Water Separator	8-50
8-5	Typical Dissolved Air Flotation System	8-51
8-6	Typical Hexavalent Chromium Reduction System	8-52
8-7	Process Flow Diagram of a Typical Chemical Precipitation System for Metals Removal	8-53
8-8	Minimum Solubilities of Various Metals Hydroxides	8-54
8-9	Typical Ion Exchange System	8-55
8-10	Typical Clarification System	8-56
8-11	Typical Multimedia Filtration System	8-57
8-12	Process Flow Diagram of a Typical Biological Treatment System	8-58
8-13	Typical Sequencing Batch Reactor Operation for One Cycle	8-59
8-14	Process Flow Diagram of Typical Biological Denitrification Systems	8-60
8-15	Typical Gravity Thickener	8-61

LIST OF FIGURES (Continued)

		Page
8-16	Typical Vacuum Filtration System	8-62
8-17	Typical Plate-and Frame Filter Press	8-63
9-1	BAT-1 for By-Product Recovery Cokemaking	9-34
9-2	BAT-3 for By-Product Recovery Cokemaking	9-35
9-3	PSES-1 for By-Product Recovery Cokemaking	9-36
9-4	PSES-3 for By-Product Recovery Cokemaking	9-37
9-5	BAT-1 for Ironmaking (Blast Furnace and Sintering Operations)	9-38
9-6	PSES-1 for Ironmaking (Blast Furnace and Sintering Operations)	9-39
9-7	BAT-1 and PSES-1 for Integrated Steelmaking (All Segments)	9-40
9-8	BAT-1 and PSES-1 for Integrated and Stand-Alone Hot Forming (All Segments)	9-41
9-9	BAT-1 and PSES-1 for Non-Integrated Steelmaking and Hot Forming (All Segments)	9-42
9-10	BAT-1 and PSES-1 for Carbon and Alloy Steel Finishing	9-43
9-11	BAT-1 and PSES-1 for Stainless Steel Finishing	9-44
9-12	BPT-1 for Direct Reduced Ironmaking	9-45
9-13	BPT-1 for Forging	9-46
10-1	Activated Carbon System for By-Products Recovery Cokemaking Wastewater	10-99
10-2	Breakpoint Chlorination for By-Product Recovery Cokemaking Wastewater	10-100
10-3	Blowdown Metals Precipitation for Ironmaking Wastewater	10-101
10-4	Breakpoint Chlorination for Ironmaking Wastewater	10-102

LIST OF FIGURES (Continued)

Page

10-5 Blowdown Metals Precipitation for Steelmaking Wastewater 10-103

10-6 Filtration of Wastewater from All Subcategories 10-104

SECTION 1

APPLICABILITY AND SUMMARY OF FINAL REGULATION

This section presents a brief overview of the Iron and Steel Category, discusses the applicability of the effluent limitations guidelines and standards for the category, and presents the applicability interface between the final rule and other regulations for the metals industry. This section also briefly summarizes the final rule and describes the Agency's efforts to protect confidential business information.

1.1 Applicability

The Iron and Steel Category comprises sites that produce raw materials used in ironmaking and steelmaking or produce finished or semifinished steel products. Operations include cokemaking, sintering, ironmaking, steelmaking, ladle metallurgy, vacuum degassing, continuous and ingot casting, hot forming, salt bath and electrolytic descaling, acid pickling, cold forming, alkaline cleaning, hot coating, direct-reduced ironmaking, briquetting, and forging.

Manufacturing operations that may be subject to the promulgated Iron and Steel rule are generally reported under one or more of the following North American Industry Classification System (NAICS) codes (Reference 1-1):

- 324199, Other Petroleum and Coal Products Manufacturing;
- 331111, Iron and Steel Mills;
- 331210, Iron and Steel Pipe and Tube Manufacturing from Purchased Steel;
- 331221, Rolled Steel Shape Manufacturing; and
- 332812, Metal coating, engraving (except jewelry and silverware), and allied services to manufacturers.

Specifically, the promulgated Iron and Steel effluent limitations guidelines and standards apply to wastewater discharges resulting from the following manufacturing operations:

- By-product recovery and other cokemaking operations manufacturing metallurgical coke (both furnace and foundry coke);
- Sintering, briquetting, and other beneficiation or agglomeration operations conducted by heating iron-bearing materials (e.g., iron ore, mill scale, blast furnace flue dust, blast furnace wastewater treatment sludge), limestone, coke fines, and other materials in a traveling grate combustion system to produce a beneficiate or agglomerate for charging to a blast furnace;

- Ironmaking operations in which iron ore and other iron-bearing materials are reduced to molten iron in a blast furnace;

- Direct-reduced ironmaking in which iron pellets are produced through a reaction of iron ore with hot reducing gases;

- Basic oxygen furnace (BOF) steelmaking, ladle metallurgy, vacuum degassing, and continuous casting operations at integrated steel mills. The rule also applies to BOF steelmaking conducted at any location;

- Electric arc furnace (EAF) steelmaking, ladle metallurgy, vacuum degassing and continuous casting operations conducted at non-integrated steel mills. The final rule also applies to EAF steelmaking conducted at any location;

- Hot forming operations conducted at integrated steel mills, non-integrated steel mills, and stand-alone hot forming mills;

- Steel forging operations performed at iron and steel mills; and

- Carbon, alloy, and stainless steel finishing operations, including salt bath and electrolytic sodium sulfate descaling, acid pickling, cold forming, alkaline cleaning, hot coating and continuous annealing at integrated, non-integrated, and stand-alone facilities.

1.2 Applicability Interface With Other Regulations

Several existing regulations currently establish effluent limitations guidelines and standards for the metals industry. Regulations covering nonferrous materials, including aluminum forming (40 CFR Part 467), copper forming (40 CFR Part 468), nonferrous metals manufacturing (40 CFR Part 421), and nonferrous metals forming (40 CFR Part 471) do not interface with the effluent limitations guidelines and standards promulgated for the Iron and Steel Category. Regulations that cover ferrous materials, however, do interface with the final rule for the Iron and Steel Category.

For facilities with process operations in more than one category, National Pollutant Discharge Elimination System (NPDES) permit writers must use a building-block approach to develop technology-based effluent limitations. Similarly, pretreatment control authorities must use the combined wastestream formula (Reference 1-2) to develop pretreatment requirements for facilities with process operations in more than one category. Permit writers and control authorities should refer to the applicability statements of the regulations for further clarification.

1.2.1 Electroplating

Facilities that are covered by the Electroplating Category and discharge to a publicly owned treatment works (POTW) are regulated under 40 CFR Part 413. This category comprises indirect discharging job shop electroplating and independent printed circuit board manufacturers that were in operation prior to July 15, 1983. The electroplating rule specifically excludes continuous strip electroplating operations conducted at indirect discharging iron and steel facilities; therefore, the electroplating rule does not overlap with the final Iron and Steel rule.

1.2.2 Metal Finishing

Wastewater discharges from facilities within the Metal Finishing Category are regulated under 40 CFR Part 433. This category comprises facilities that perform any of the following six metal finishing operations on any basis material: electroplating, electroless plating, anodizing, coating (chromating, phosphating, and coloring), chemical etching and milling, and printed circuit board manufacturing. The Metal Finishing rule establishes effluent limitations guidelines and standards for 40 surface treatment operations at facilities within this category.

1.2.3 Coil Coating

Wastewater discharges from facilities within the Coil Coating Category are regulated under 40 CFR Part 465. Coil coating facilities typically clean, conversion coat, and apply organic polymeric materials (such as paint) to continuous strips of metal coil (typically steel, galvanized metal, or aluminum). The Coil Coating Category comprises facilities that perform at least two of these three operations. The Iron and Steel rule is not intended to regulate mild acid or mild alkaline cleaning operations conducted at coil coating facilities, nor is it intended to regulate conversion coating or the application of organic polymeric material to steel; therefore, the promulgated Iron and Steel rule does not overlap with the Coil Coating rule.

1.2.4 Ferroalloy Manufacturing

Wastewater discharges from facilities Within the Ferroalloy Manufacturing Category are regulated under 40 CFR Part 424. This category comprises facilities that smelt ferroalloys in electric furnaces or other devices with wet air pollution control, recover and process furnace slag, produce calcium carbide in covered electric furnaces with and without wet air pollution control and manufacture electrolytic manganese products and electrolytic chromium products. A ferroalloy is an iron-bearing product, not within the range of those products called steel, which contains a considerable amount of one or more alloying elements, such as manganese, silicon, phosphorus, vanadium, and chromium. The Iron and Steel Category does not cover any ferroalloy manufacturing operations.

1.2.5 Metal Molding and Casting

Wastewater discharges from facilities within the Metal Molding and Casting Category are regulated under 40 CFR Part 464. This category comprises facilities that remelt, mold, and cast aluminum, copper, zinc, and ferrous metals and alloys into intermediate or finished products. The Iron and Steel rule does not overlap with the Metal Molding and Casting rule.

1.3 Summary of Proposed Regulation

On October 31, 2000, the EPA Administrator signed proposed revisions to technology-based effluent limitations guidelines and standards for wastewater discharges from new and existing iron and steel facilities. The proposed rule was published in the Federal Register on December 27, 2000 (65 FR 81964). EPA proposed to alter the applicability and scope of the existing rule by adding electroplating operations and by including direct iron reduction, briquetting, and forging operations. In addition, EPA proposed excluding from the iron and steel guideline in Part 420 some wire, cold forming, and hot dip coating operations. In a proposed rule for the Metal Products and Machinery (MP&M) industrial category published on January 3, 2001 (66 FR 424), EPA proposed to address these operations under Part 438.

The Agency proposed to revise the subcategorization scheme to create seven subcategories of iron and steel facilities based on co-treatment of compatible waste streams. This would have replaced the present structure of 12 subcategories. The proposed subcategorization approach would have reflected the way treatment systems are run in the iron and steel industry. EPA proposed the following seven subcategories:

Subpart	Subcategory	Segment
Subpart A	Cokemaking Subcategory	By-product Non-recovery
Subpart B	Ironmaking Subcategory	Blast Furnace Sintering
Subpart C	Steelmaking Subcategory	
Subpart D	Integrated and Stand-Alone Hot Forming Mills Subcategory	Carbon and Alloy Stainless
Subpart E	Non-Integrated Steelmaking and Hot Forming Operations Subcategory	Carbon and Alloy Stainless
Subpart F	Steel Finishing Subcategory	Carbon and Alloy Stainless
Subpart G	Other Operations Subcategory	Direct-Reduced Ironmaking Forging Briquetting

For most of the subcategories, except for cokemaking, finishing, and the newly added subcategory for other operations, the Agency proposed limits based on improved performance and operation of the same technologies that were the basis for the limits and standards promulgated in 1982 and amended in 1984. Consequently, the proposed limitations were more stringent than the limitations promulgated in 1982. For the cokemaking subcategory, EPA proposed BAT limits based on a technology option that was essentially the same as the 1982 technology basis but included an additional treatment step -- alkaline chlorination. For finishing, EPA proposed limits based on the 1982 technology basis with the addition of counter-current rinsing and acid purification.

For many of the proposed subcategories, wastewater flow reduction steps, in concert with better performance of the blowdown treatment systems, provided the primary basis for the proposal limits and standards. The proposed rule included the following features:

- EPA proposed two different BAT approaches for the carbon and alloy segment of the integrated and stand-alone hot forming subcategory. The options differed in the amount of time that facilities in the segment would have to achieve BAT limitations. Under one option, a facility would be subject to BAT limitations as soon as these limitations are placed in the NPDES permit. Under the other option, a facility could obtain additional time to achieve BAT limitations.

- The Agency proposed zero discharge as NSPS for the non-integrated steelmaking and hot forming subcategory.

- EPA considered defining a reasonable measure of actual production for calculating NPDES and pretreatment permit production rates.

- EPA proposed regulating, among others, mercury and selenium based on toxicity and presence in cokemaking wastewater.

- EPA proposed regulating 2,3,7,8-tetrachlorodibenzofuran (2,3,7,8-TCDF) in sinter plant wastewater and requiring compliance monitoring either after the primary treatment of sinter plant wastewater or after sinter plant and blast furnace wastewater discharges are cotreated, but before sinter plant wastewater is combined with any other process or non-process discharges.

- EPA considered developing a limit, based on acid purification technology or product substitution, for nitrate/nitrite (in the form of nitrate-nitrite-N) for stainless steel finishing operations with nitric acid and combination acid pickling.

- EPA considered waiving the pretreatment standards for ammonia as nitrogen for blast furnace wastewater indirectly discharged to POTWs that have the capability to conduct nitrification.

- EPA proposed revising the units of pollutant limitations from kilograms of allowable pollutant discharge per thousand kilograms of production (kg/kkg), also expressed as pounds of allowable pollutant discharge per thousand pounds of production (lbs/1,000 lbs), to pounds of allowable pollutant discharge per ton of production (lbs/ton).

- EPA proposed making the following revisions to the 1982 "Water Bubble" provision, but leaving the remainder unchanged:

  — Allow trades for cold rolling operations,

  — Allow trades for cokemaking operations, but only when more stringent limits result,

  — Prohibit trades for sintering operations when less stringent limits result, and

  — Prohibit trades for oil and grease.

- While the 1982 regulation often prompts permit writers and control authorities to apply pH limitations at internal discharge monitoring locations, prior to additional treatment or mixing with other wastewater discharges, the proposed rule allows permit writers and control authorities to establish pH effluent limitations at final outfalls such that redundant and unnecessary pH neutralization can be avoided.

The presentation in the remainder of this Technical Development Document will be organized around the proposed subcategorization scheme. The proposed subcategorization scheme was the basis on which EPA evaluated the technology options described and on which EPA made its final determinations regarding the content of the promulgated rule.

1.4 Summary of Final Regulation

EPA has decided to revise effluent limitations guidelines and standards only for current Subpart A (cokemaking), Subpart B (sintering), Subpart C (ironmaking), and Subpart D (steelmaking), and to promulgate new effluent limitations guidelines and standards for new Subpart M (other operations).

As a result of EPA's technical and economic review, EPA is promulgating revised BAT limitations, NSPS and pretreatment standards for the cokemaking by-product recovery segment based on technologies that are different than those proposed. Specifically, EPA is promulgating effluent limits based primarily on ammonia still and biological treatment with nitrification for direct dischargers and pretreatment standards based primarily on ammonia still treatment for indirect dischargers.

For the cokemaking subcategory, today's rule combines the "iron and steel" and "merchant" segments into a newly-created "by-product recovery" cokemaking segment for most regulatory purposes, although EPA is retaining the "iron and steel" and "merchant" segments for purposes of reflecting the existing BPT limitations. EPA concluded that this was appropriate because the production processes, wastewater characteristics, and wastewater flow rates from all by-product recovery cokemaking operations, including merchant facilities, are similar.

EPA is also eliminating the segment in BAT for by-product coke plants with physical chemical treatment systems. EPA has determined that technology basis for BAT limitations promulgated in today's rule are technically and economically achievable for all direct discharging by-product coke plants.

EPA is not establishing limitations and standards for selenium, mercury, or thiocyanate, nor is it establishing pretreatment standards for phenol in cokemaking subcategory. EPA is establishing limitations for phenols (4AAP) in the cokemaking subcategory.

For the sintering subcategory, EPA is revising the current regulation to add limitations and standards for one additional pollutant, 2,3,7,8-TCDF, while keeping the rest of the limits unchanged. The technology basis for new TCDF limitations and standards for the sintering subcategory remains unchanged from the proposal and is the same as the technology basis for the 1982 regulations with the addition of mixed-media filtration. EPA is also establishing limitations of no discharge of process wastewater pollutants for new and existing direct dischargers and new and existing indirect dischargers for sintering operations with dry air pollution control systems.

EPA is codifying language providing that the ammonia as nitrogen pretreatment standards do not apply to cokemaking, ironmaking, and sintering facilities discharging to POTWs with nitrification capability.

For the steelmaking subcategory, EPA is revising BPT, BCT, BAT, and PSES limitations for the semi-wet basic oxygen furnace (BOF) operations to allow discharge of process wastewater, when merited by safety considerations. EPA is allowing discharge of process wastewater because certain safety concerns currently prevent some sites from balancing the water applied for BOF gas conditioning with evaporative losses to achieve zero discharge. Also in the steelmaking subcategory, for the semi-wet EAF operations, EPA is establishing limitations of no discharge of process wastewater pollutants for new direct dischargers and existing and new indirect dischargers, making these limitations equivalent to the previously promulgated BPT, BCT, and BAT limitations applicable to semi-wet electric arc furnace (EAF) operations. EPA identified none of the safety or production concerns discussed for semi-wet BOF operations.

EPA is establishing, as proposed, the limitations and standards for the Other Operations subcategory.

Due to the small number of subcategories affected by today's rule, the Agency has decided to retain the 1982 subcategory structure with the addition of an "other operations" subcategory. As a result, the final rule covers the following 13 subcategories:

Subcategory	Description
Subcategory A	Cokemaking (includes by-product and non-recovery operations)
Subcategory B	Sintering (includes wet and dry air pollution control operations)
Subcategory C	Ironmaking
Subcategory D	Steelmaking (includes basic oxygen furnace and electric arc furnace operations)
Subcategory E	Vacuum degassing
Subcategory F	Continuous casting
Subcategory G	Hot forming
Subcategory H	Salt bath descaling
Subcategory I	Acid pickling
Subcategory J	Cold forming
Subcategory K	Alkaline cleaning
Subcategory L	Hot coating
Subcategory M	Other operations (includes forging, direct-reduced ironmaking, and briquetting operations)

EPA is eliminating segments for the following obsolete operations: beehive cokemaking, ferromanganese blast furnaces, and open hearth furnaces.

EPA is promulgating the following revisions to the "Water Bubble" provision:

- Allow trades for cold rolling operations;
- Allow trades for cokemaking operations, but only when more stringent limits result;
- Allow trades for Subpart M operations;
- Prohibit trades for 2,3,7,8-TCDF;
- Eliminate the net reduction provision;

- Prohibit trades for oil and grease; and
- Allow trades for new as well as existing sources.

1.5 Protection of Confidential Business Information

EPA recognizes that certain data in the rulemaking record have been claimed as confidential business information (CBI). The Agency has withheld CBI from the public record in the Water Docket. In addition, the Agency has withhold from disclosure some data not claimed as CBI because the release of these data could indirectly reveal CBI. Furthermore, EPA has aggregated certain data in the public record, masked facility identities, or used other strategies to prevent the disclosure of CBI. The Agency's approach to CBI protection ensures that the data in the public record both explain the basis for the final rule and provide the opportunity for public comment, without compromising data confidentiality.

1.6 References

1-1 North American Industry Classification System, U.S. Office of Management and Budget. Washington, DC, 1997.

1-2 U.S. Environmental Protection Agency. Guidance Manual for the Use of Production-Based Pretreatment Standards and the Combined Wastestream Formula. Washington, DC, September 1985.

SECTION 2

BACKGROUND

This section provides background information on the development of revised effluent limitations guidelines and standards for the Iron and Steel Category. Sections 2.1 and 2.2 discuss the legal authority and legislative background for the rule. Section 2.3 presents references for the Iron and Steel Category rulemaking activities.

2.1 Legal Authority

EPA is revising effluent limitations guidelines and standards for the Iron and Steel Category under the authority of Sections 301, 304, 306, 307, 308, 402, and 501 of the Clean Water Act, 33 U.S.C. 1311, 1314, 1316, 1317, 1318, 1342, and 1361.

2.1.1 Legislative Background

Congress adopted the Clean Water Act (CWA) to "restore and maintain the chemical, physical, and biological integrity of the Nation's waters" (Section 101(a), 33 U.S.C. 1251(a)). To achieve this goal, the CWA prohibits the discharge of pollutants into navigable waters except in compliance with the statute. The CWA confronts the problem of water pollution on a number of different fronts. Its primary reliance, however, is on establishing restrictions on the types and amounts of pollutants discharged from various industrial, commercial, and public sources of wastewater.

Congress recognized that regulating only those sources that discharge effluent directly into the nation's waters would not be sufficient to achieve the goals of the CWA. Consequently, the CWA requires EPA to promulgate nationally applicable pretreatment standards that restrict pollutant discharges for those facilities that discharge wastewater indirectly through sewers flowing to publicly owned treatment works (POTWs) (Section 307(b) and (c), 33 U.S.C. 1317(b) and (c)). National pretreatment standards are established for wastewater pollutants that may pass through or interfere with POTW operations. Generally, pretreatment standards are designed to ensure that wastewater from direct and indirect industrial dischargers are subject to similar levels of treatment. In addition, POTWs are required to implement local treatment limits applicable to their industrial indirect dischargers to satisfy any local requirements (40 CFR 403.5).

Direct dischargers must comply with effluent limitations in National Pollutant Discharge Elimination System (NPDES) permits; indirect dischargers must comply with pretreatment standards. These limitations and standards are established by regulation for categories of industrial dischargers and are based on the degree of control that can be achieved using various levels of pollution control technology.

Best Practicable Control Technology Currently Available (BPT) -- Section 304(b)(1) of the CWA

In establishing the effluent limitations guidelines and standards for the Iron and Steel Category, EPA generally defines BPT effluent limitations for conventional, non-conventional, and priority pollutants. In specifying BPT, EPA looks at a number of factors. EPA first considers the cost of achieving effluent reductions in relation to the effluent reduction benefits. The Agency also considers the age of equipment and facilities, the processes employed and any required process changes, engineering aspects of the control technologies, non-water quality environmental impacts (including energy requirements), and other factors the Agency deems appropriate (CWA 304(b)(1)(B)). Traditionally, EPA establishes BPT effluent limitations based on the average of the best performances of facilities within the industry of various ages, sizes, processes, or other common characteristics. Where, however, existing performance is uniformly inadequate, EPA may require higher levels of control than currently in place in an industrial category if the Agency determines that the technology can be practically applied.

Best Conventional Pollutant Control Technology (BCT) -- Section 304(b)(4) of the CWA

The 1977 amendments to the CWA required EPA to identify effluent reduction levels for conventional pollutants associated with BCT technology for discharges from existing industrial point sources. In addition to other factors specified in Section 304(b)(4)(B), the CWA required that EPA establish BCT limitations after consideration of a two-part "cost reasonableness" test. EPA explained its methodology for the development of BCT limitations in July 1986 (51 FR 24974).

Section 304(a)(4) designates the following as conventional pollutants: biochemical oxygen demand, total suspended solids, fecal coliform, pH, and any additional pollutants defined by the Administrator as conventional. The Administrator designated oil and grease as an additional conventional pollutant on July 30, 1979 (44 FR 44501).

Best Available Technology Economically Achievable (BAT) -- Section 304(b)(2) of the CWA

In general, BAT effluent limitations guidelines represent the best economically achievable performance of facilities in the industrial subcategory or category. The factors considered in assessing BAT include the cost of achieving BAT effluent reductions, the age of equipment and facilities involved, the process employed, potential process changes, and non-water quality environmental impacts, including energy requirements. The Agency retains considerable discretion in assigning the weights of these factors. BAT limitations may be based on effluent reductions attainable through changes in a facility's processes and operations. As with BPT, where existing performance is uniformly inadequate, BAT may require a higher level of performance than is currently being achieved based on technology transferred from a different subcategory or category. BAT may be based upon process changes or internal controls, even when these technologies are not common industry practice.

New Source Performance Standards (NSPS) -- Section 306 of the CWA

NSPS reflect effluent reductions that are achievable based on the best available demonstrated control technology. New facilities have the opportunity to install the best and most efficient production processes and wastewater treatment technologies. As a result, NSPS should represent the most stringent controls attainable through the application of the best available control technology for all pollutants (that is, conventional, non-conventional, and priority pollutants). In establishing NSPS, EPA is directed to take into consideration the cost of achieving the effluent reduction and any non-water quality environmental impacts and energy requirements.

Pretreatment Standards for Existing Sources (PSES) -- Section 307(b) of the CWA

PSES are designed to prevent the discharge of pollutants that pass through, interfere with, or are otherwise incompatible with the operation of POTWs. The CWA authorizes EPA to establish pretreatment standards for pollutants that pass through POTWs or interfere with treatment processes or sludge disposal methods at POTWs. Pretreatment standards are technology-based and analogous to BAT effluent limitations guidelines.

The General Pretreatment Regulations, which set forth the framework for the implementation of categorical pretreatment standards, are found at 40 CFR Part 403. Those regulations contain a definition of pass-through that address local rather than national instances of pass-through and establish pretreatment standards that apply to all non-domestic dischargers (see 52 FR 1586, January 14, 1987).

Pretreatment Standards for New Sources (PSNS) -- Section 307(c) of the CWA

Like PSES, PSNS are designed to prevent the discharges of pollutants that pass through, interfere with, or are otherwise incompatible with the operation of POTWs. PSNS are to be issued at the same time as NSPS. New indirect dischargers have the opportunity to incorporate into their facilities the best available demonstrated technologies. The Agency considers the same factors in promulgating PSNS as it considers in promulgating NSPS.

2.1.2 Section 304(m) Requirements and Litigation

Section 304(m) of the CWA, added by the Water Quality Act of 1987, requires EPA to establish schedules for (1) reviewing and revising existing effluent limitations guidelines and standards; and (2) promulgating new effluent limitations guidelines and standards. On January 2, 1990, EPA published an Effluent Guidelines Plan (55 FR 80) that established schedules for developing new and revised effluent limitations guidelines and standards for several industry categories, one of which was the Iron and Steel Category.

The Natural Resources Defense Council (NRDC) and Public Citizen, Inc. filed suit against the Agency, alleging violation of Section 304(m) and other statutory authorities requiring promulgation of effluent limitations guidelines and standards (Reference 2-1). Under the terms of a consent decree dated January 31, 1992, which settled the litigation, EPA agreed to, among other things, conduct a study of the Iron and Steel industry. This study, which is discussed in Section 2.2.3 of this document, was completed in 1995. After the study, the Agency named the Iron and Steel rule as one of the rules to be developed under the consent decree. On November 18, 1998, the court approved modifications to the consent decree to revise the deadline for the Iron and Steel rule to October 2000 for proposal and April 2002 for final action.

2.2 History of Iron and Steel Category Rulemaking Activities

This section presents a brief history of Iron and Steel Category rulemaking activities. Section 2.2.1 discusses prior Iron and Steel Category wastewater discharge regulations. Section 2.2.2 discusses the current Iron and Steel rule. Section 2.2.3 discusses the Preliminary Study of the Iron and Steel Category. Section 2.2.4 discusses the Proposed Regulation, Section 2.2.5 the Notice of Data Availability, and Section 2.2.6 the Extension to the Public Comment Period.

2.2.1 Prior Regulations

On June 28, 1974, EPA promulgated effluent limitations for BPT and BAT, NSPS, and PSNS for basic steelmaking operations (Phase I) of the integrated steel industry (39 FR 24114-24133, 40 CFR Part 420, Subparts A-L). The regulation covered the following 12 subcategories of the industry:

- By-product cokemaking;
- Beehive cokemaking;
- Sintering;
- Blast furnace (iron);
- Blast furnace (ferromanganese);
- Basic oxygen furnace (semi-wet air pollution control methods);
- Basic oxygen furnace (wet air pollution control methods);
- Open hearth furnace;
- Electric arc furnace (semi-wet air pollution control methods);
- Electric arc furnace (wet air pollution control methods);
- Vacuum degassing; and
- Continuous casting and pressure slab molding.

In response to several petitions for review, the United States Court of Appeals for the Third Circuit remanded that regulation on November 7, 1975 (Reference 2-2). While the court rejected all technical challenges to the BPT limitations, it held that the BAT effluent limitations and NSPS for certain subcategories were "not demonstrated." In addition, the court questioned the entire regulation on the grounds that EPA had failed to adequately consider the impact that plant age had on the cost or feasibility of retrofitting pollution controls, had failed to

assess the impact of the regulation on water scarcity in arid and semi-arid regions of the country, and had failed to make adequate "net/gross" provisions for pollutants found in intake water supplies. The court also held that the "form" of the regulation was improper because the regulation did not provide "ranges" of limitations to be selected by permit issuers. This judgement, however, was amended (Reference 2-3).

On March 29, 1976, EPA promulgated BPT effluent limitations and proposed BAT effluent limitations, NSPS, and PSNS for steel forming and finishing operations (Phase II) within the steel industry (39 FR 12990-13030, 40 CFR Part 420, Subparts M-Z). The regulation covered the following 14 subcategories of the industry:

- Hot forming - primary;
- Hot forming - section;
- Hot forming - flat;
- Pipe and tube;
- Pickling - sulfuric acid - batch and continuous;
- Pickling - hydrochloric acid - batch and continuous;
- Cold rolling;
- Hot coating - galvanizing;
- Hot coating - terne;
- Miscellaneous runoff - storage piles, casting, and slagging;
- Combination acid picking - batch and continuous;
- Scale removal - Kolene and Hydride;
- Wire pickling and coating; and
- Continuous alkaline cleaning.

The U.S. Court of Appeals for the Third Circuit remanded that regulation on September 14, 1977 (Reference 2-4). While the court again rejected all technical challenges to the BPT limitations, it again questioned the regulation in regard to the age/retrofit and water scarcity issues. In addition, the court invalidated the regulation for lack of proper notice to the specialty steel industry and directed EPA to reevaluate its cost estimates in light of "site-specific costs" and reexamine its economic impact analysis. The court also held that the Agency had no statutory authority to exempt plants in the Mahoning Valley region of Eastern Ohio from compliance with the BPT limitations.

On January 28, 1981, the Agency promulgated General Pretreatment Regulations applicable to existing and new indirect dischargers within the Iron and Steel industry and other major industries (40 CFR Part 403, 47 FR 4518).

2.2.2 Current Regulation

On May 27, 1982, EPA promulgated effluent limitations for BPT, BAT, BCT, and NSPS, PSES, and PSNS for the Iron and Steel Category (47 FR 23258, 40 CFR Part 420). The regulation covered the following 12 subcategories of the industry:

- Cokemaking;
- Sintering
- Ironmaking;
- Steelmaking;
- Vacuum degassing;
- Continuous casting;
- Hot forming;
- Salt bath descaling;
- Acid pickling;
- Cold forming;
- Alkaline cleaning; and
- Hot coating.

The 1982 regulation was the first promulgated by EPA under the 1977 amendments to the CWA, and thus was the first to distinguish between conventional, non-conventional, and priority pollutants in the regulatory scheme established by the 1977 amendments.

The American Iron and Steel Institute, certain members of the Iron and Steel industry, and the NRDC filed petitions to review the 1982 regulation. Their challenges were consolidated into one lawsuit by the Third Circuit Court of Appeals (Reference 2-5). On February 4, 1983, the parties in the consolidated lawsuit entered into a comprehensive settlement agreement that resolved all issues raised by the petitioners. In accordance with the settlement agreement, EPA modified and clarified certain parts of the Iron and Steel rule and published additional preamble language regarding the rule.[1] The Iron and Steel rule was amended on May 17, 1984 (49 FR 21024). Some of the modifications made to the rule include the following:

- EPA included a method for calculating production-based pretreatment standards. This method largely mirrored the method given at 40 CFR 122.45(b)(2) for calculating production-based effluent limitations for direct dischargers.

- While the "Water Bubble" provision in the 1982 rule provided that the alternative effluent limitations established under the provision must result in *no increase* in the discharge of pollutants beyond that allowed by the generally applicable limitations, the provision was amended to provide that alternative effluent limitations must result in a specified *decrease* in the discharge of traded pollutants from the amount allowed by the generally applicable limitations.

[1]EPA also agreed to take final action on an amendment to the General Pretreatment Regulations (40 CFR Part 403) to permit the reclassification of noncontact cooling water flows contaminated with significant quantities of pollutants from "dilute" to "unregulated" for purposes of the combined wastestream formula at 40 CFR 403.6 (e).

- EPA included a provision that removal credits may be granted for phenols (4AAP) when used as an indicator or surrogate pollutant.

- BAT, NSPS, PSES, and PSNS effluent limitations and standards for lead and zinc were raised slightly in the ironmaking and sintering subcategories.

- EPA modified BAT effluent limitations and PSES for total cyanide and established a new segment for existing indirect blast furnace dischargers. The new segment contained standards identical to the generally applicable PSES except that the promulgated ammonia-N and phenols (4AAP) standards were less stringent.

- BPT, BAT, NSPS, PSES, and PSNS effluent limitations and standards for zinc were raised slightly in the sulfuric and hydrochloric acid pickling segments of the acid pickling subcategory.

- While the 1982 regulation limited all cold worked pipe and tube operations to zero discharge for BPT, BAT, BCT, NSPS, PSES, and PSNS, EPA modified the rule to permit nominal discharges (rather than contract hauling) of spent oil or water solution and to specify that limitations and standards for types of process wastewater not covered under the 1982 regulation were to be developed on a case-by-case basis.

- EPA modified effluent limitations and standards for zinc under the hot coating subcategory, provided that facilities achieving zinc discharge levels more stringent than the amended limitations and standards continued to do so. The amended rule also provided that the limitations could be used as a basis for determining alternative limitations under the "Water Bubble" provision, even for those facilities achieving discharge levels more stringent than the amended limitations and standards.

EPA temporarily excluded 21 facilities from the provisions of the 1982 rule due to economic considerations, provided the owner(s) or operator(s) of the facilities requested that the Agency consider establishing alternative effluent limitations and supplied EPA with information consistent with 40 CFR 420.01(b) on or before July 26, 1982.

2.2.3 Preliminary Study of the Iron and Steel Category

EPA was required by the terms of the 1992 consent decree with the NRDC to initiate preliminary reviews of a number of categorical effluent limitations guidelines and standards on a set schedule. In compliance with the requirement, EPA published the "Preliminary Study of the Iron and Steel Category" (EPA 821-R-95-037) in September 1995. The study included:

- A preliminary assessment of the status of the industry with respect to the Iron and Steel rule promulgated in 1982 and amended in 1984;
- Identification of better-performing mills using conventional and innovative in-process pollution prevention and end-of-pipe treatment technologies;
- Estimation of possible effluent reduction benefits if the industry was upgraded to the level of better-performing mills; and
- Identification of regulatory and implementation issues with the Iron and Steel rule and identification of possible solutions to those regulatory and implementation issues.

The study found that the Iron and Steel industry had evolved during the decade following the 1984 amendments to the Iron and Steel rule. The study found that the industry had made improvements in manufacturing techniques, water conservation, pollution prevention, and wastewater treatment practices. The study also found that the industry had consolidated and modernized in response to domestic and world competition. While integrated mills continued to decrease in size in response to changes in demand, the market for non-integrated mills using steel scrap as their primary material continued to expand due to improvements in the quality of steel manufactured from scrap. Cokemaking operations were declining due to changes in ironmaking processes, while direct-reduced ironmaking was increasing. Also, continuous casting became the new industry standard due to the increased energy efficiency of the process compared with piecemeal casting.

Overall, the study found that the industry was operating with greater efficiency. Pollutant loadings had decreased due to increased wastewater recycle rates on manufacturing processes and improved wastewater treatment processes. At the time of the study, many better-performing mills were discharging wastewater loadings far below the 1982 standards; however, not all of the industry had improved wastewater treatment or implemented proactive pollution prevention practices. At the time of the study, some mills continued to discharge in excess of the 1982 rule.

2.2.4 Proposed Regulation

On October 31, 2000, the EPA Administrator signed proposed revisions to technology-based effluent limitations guidelines and standards for wastewater discharges from new and existing iron and steel facilities. The proposed rule was published in the Federal Register on December 27, 2000 (65 FR 81964). EPA proposed to alter the applicability and scope of the existing rule by adding electroplating operations and by including direct iron reduction, briquetting, and forging operations. In addition, EPA proposed excluding from the iron and steel guideline in Part 420 some wiring, cold forming, and hot dip coating operations. In a proposed rule for the Metal Products and Machinery (MP&M) industrial category published on January 3, 2001 (66 FR 424) EPA proposed to address these operations under Part 438.

The Agency proposed to revise the subcategorization scheme to create seven subcategories of iron and steel facilities based on co-treatment of compatible waste streams. This would have replaced the present structure of 12 subcategories. The proposed subcategorization approach reflected the way treatment systems are generally run in the iron and steel industry. EPA proposed the following seven subcategories:

Subpart	Subcategory	Segment
Subpart A	Cokemaking Subcategory	By-product Non-recovery
Subpart B	Ironmaking Subcategory	Blast Furnace Sintering
Subpart C	Steelmaking Subcategory	
Subpart D	Integrated and Stand-Alone Hot Forming Mills Subcategory	Carbon and Alloy Stainless
Subpart E	Non-Integrated Steelmaking and Hot Forming Operations Subcategory	Carbon and Alloy Stainless
Subpart F	Steel Finishing Subcategory	Carbon and Alloy Stainless
Subpart G	Other Operations Subcategory	Direct-Reduced Ironmaking Forging Briquetting

For most of the subcategories, except for cokemaking, finishing, and the newly added subcategory for other operations, the Agency proposed limits based on improved performance and operation of the same technology basis used to establish limits and standards in the 1982 rule. Consequently, the proposed limitations were more stringent than the limitations promulgated in 1982. For the cokemaking subcategory, EPA proposed BAT limits based on a technology option that was essentially the same as the 1982 technology option but included an additional treatment step -- alkaline chlorination. For finishing, EPA proposed limits based on the 1982 technology basis with the addition of counter-current rinsing and acid purification.

For many of the proposed subcategories, wastewater flow reduction steps, in concert with better performance of the blowdown treatment systems, provided the primary basis for the proposal limits and standards. The proposed options were presented in the Federal Register at 65 FR 81968-69, December 27, 2000 and in the Proposed Technical Development Document (EPA-821-B-00-011) in Section 14 (Reference 2-6).

Additionally, the proposed regulation provided notice of EPA's intent to delist a number of obsolete manufacturing operations from Part 420. These operations are shut down, the equipment has generally been dismantled, and production is not likely to ever resume in the United States. These operations are Beehive Coke Ovens (Part 420.12 (c), Part 420.13 (c), Part 420.14 (c), Part 420.15 (c), 420.16 (c), and 420.17 (c)); Ferromanganese blast furnace (Part

420.32(b), Part 420.33(b), 420.34(b), 420.35(b), and 420.36(b)); and Open Hearth Furnace (420.42 (c), and 420.43(c), 420.44 (d), 420.45 (c), 420.46(d), and 420.47(d)).

The proposed regulation is available on line at: **www.epa.gov/ost/ironsteel/notices.html.**

2.2.5 Notice of Data Availability

On February 14, 2001, EPA published a Notice of Data Availability (NODA) at 66 FR 10253. This notice provided additional discussion and clarification on some of the issues raised in the proposal. For example, the notice discussed EPA's new finding that phenol does not pass through POTWs, and indicated that EPA was rethinking its proposal to establish a nation-wide limit on ammonia from steel finishing operations.

The NODA also provided notice of changes to certain portions of the proposed regulation and accompanying preamble to eliminate inconsistencies. Finally, it corrected potentially confusing typographical errors and extended the proposal's comment period from February 26, 2001 to March 26, 2001. The February NODA is located on line at: **www.epa.gov/ost/ironsteel/reg.html.**

2.2.6 Extension to Public Comment Period

On April 4, 2001, EPA published a notice (66 FR 17842) extending the comment period to April 25, 2001.

2.2.7 Public Outreach

Public outreach began early in the process for the re-visitation of Part 420. The Agency visited 37 mills in order to get a better understanding of the current state of the iron and steel industry. The two purposes of the preliminary visits were to get assistance on preparation of the 308 survey and to search for candidate sampling mills. We needed a better understanding on what kinds of questions we needed to ask, how to ask them, what kind of data was available, where, who to ask, and other useful information such as current performance levels of treatment systems. All this information was use to prepare an Information Collection Request (ICR), which contained the 308 survey questionnaires, for OMB review. The OMB approved the ICR on March 3, 1998 (OMB Control No. 2040-0193).

Once we began to receive the 1997 database from the survey responses, the Agency prepared some preliminary summary information, and held a series of public meeting with stakeholders to discuss data submitted. Significant meetings were held in both Washington, D.C. and Chicago during 1998, 1999, and 2000 to reach a larger audience. Many additional meetings were held with stakeholders to reach the regulated community and to seek technical advise from the industry. At these meetings we sought the advice of all stakeholders on what they believed needed to be revised with Part 420, how this should be done, and sought their assistance in achieving this goal. We often presented information on pollutants of concern,

candidate treatment systems performance levels from better performing mills, and some preliminary estimates of attainability. On every occasion possible, some requested by the industry, some requested by the Agency staff, staff either went to the trade associations offices or participated via conference call to keep the dialogue open. These working session were essential to get a better understanding of their issues. At all meetings, the staff provided updates on the development of the study, exchanged ideas and, where appropriate, presented aggregate information to continue the dialogue.

The Agency also set up a website (**www.epa.gov/ost/ironsteel**) specifically to keep the public informed the about the development of the iron and steel regulation. The website contained background information on the purpose of the study, the current 1982 regulation, the preliminary study, all Federal Register notices related to this action, a complete copy of the ICR, news and stakeholder information such as minutes of meetings and action related to this activity, Agency contacts, links to trade associations, as well as other information. All documents presented at the public meetings were placed on the website and the website was kept up to date.

The Agency also invited many other stakeholders including members of the environmental community into our discussions. On some occasions, the Agency paid the travel of several stakeholders to attend these meeting in order to get input from all concerned stakeholders.

After the revised regulation was proposed, EPA continued to our outreach efforts. Staff presented aggregate information at several national conventions, held a public meeting on February 20, 2001, answered hundreds of phone calls. The staff completely complied with all written requests submitted by industry representative, within the bounds of 40 CFR Part 2, Subpart B, including providing plant-specific detailed costing when disclosure would not compromise confidential business information claims. The Agency made a special effort to keep the industry technical community involved since we felt it was essential to have their technical expertise available. We had a series of meetings in April 2001 and another in November 2001 to get a better understanding of their concerns with the proposed regulation. Every effort, within reason, was made to bring all stakeholders into the process to get a picture of the current iron and steel industry.

2.3 References

2-1 NRDC *et al.* v. Whitman, Civ. No. 89-2980 (D.D.C.).

2-2 American Iron and Steel Institute, et al. v. EPA, 526 F.2d 1027 (3d Cir. 1975).

2-3 American Iron and Steel Institute, et al. v. EPA, 560 F.2d 589 (3d Cir. 1977).

2-4 American Iron and Steel Institute, et al. v. EPA, 568 F.2d 284 (3d Cir. 1977).

2-5 National Steel Corp. v. EPA, No. 82-3225 and Consolidated Cases.

2-6 U.S. Environmental Protection Agency. Development Document for the Proposed Effluent Limitations Guidelines and Standards for the Iron and Steel Manufacturing Point Source Category. EPA 821-B-00-011, Washington, DC, December 2000.

SECTION 3

DATA COLLECTION

EPA collected and evaluated information and data from various sources in the course of developing today's final effluent limitations guidelines and standards for the iron and steel industry. EPA used these data to develop the industry profile, to determine the applicability of the rule, to subcategorize the industry, and to determine wastewater characteristics, technology options, compliance costs, pollutant loading reductions, and non-water quality environmental impacts. This section discusses the following data collection activities:

- Base year, for developing industry characteristics (Section 3.1);
- Surveys, including descriptions of the survey instruments and determination of survey recipients (Section 3.2);
- Site visits, including descriptions of the types of sites visited, the geographical locations, and the manufacturing processes at the sites visited (Section 3.3);
- Sampling episodes, including the types of sites sampled, the manufacturing processes and treatment systems sampled, and the sampling process (Section 3.4);
- Other data sources (Section 3.5);
- Public participation, including meetings with stakeholders from industry trade associations, individual steel companies, environmental groups, and nongovernmental organizations (Section 3.6);
- Summary of post-proposal data collected, including data submitted with comments on the proposed rule and data requested by the Agency (Section 3.7); and
- References (Section 3.8).

3.1 Base Year

EPA's effluent limitations guidelines studies typically use a base year for developing the industry characteristics that provide the basis for consistent technical, economic, and environmental assessments. When the iron and steel study data gathering efforts were initiated, 1997 was the most current year for gathering relatively complete, accurate information on manufacturing processes, waste management practices, in-place wastewater treatment technology, wastewater characteristics, costs of wastewater management and treatment practices, production levels, and pollutant loadings as well as economic and financial conditions. EPA

took a "snap-shot" of the industry to develop the costs for various wastewater treatment technology options, pollutant reduction benefits, and economic impacts for each option. Therefore, the impacts would correspond to the concurrent industry characteristics. As is the case for most effluent guidelines, for the final rule, EPA continued to use the base year information (from 1997) in its engineering analyses unless indicated otherwise. This is appropriate because it allows EPA to maintain a consistent database upon which to base its analyses.

3.2 Surveys

The principal source of information and data used in developing effluent limitations guidelines and standards is the industry response to surveys distributed by EPA under the authority of Section 308 of the Clean Water Act. EPA designed these surveys to obtain information concerning manufacturing operations, wastewater generation and treatment, discharge practices, and analytical data. The Agency also developed related surveys to obtain financial data for use in assessing economic impacts and the economic achievability of technology options.

EPA developed an Information Collection Request (ICR) entitled U.S. Environmental Protection Agency Collection of 1997 Iron and Steel Industry Data that explains the regulatory basis and intended use of the industry surveys. The Office of Management and Budget (OMB) approved the ICR in August 1998 (OMB Control No. 2040-0193, approval expired 08/31/2001) (Reference 3-1). The Agency published three Federal Register notices announcing:

(1) the intent to distribute the surveys (62 FR 54453; October 20, 1997);

(2) the submission of the ICR to the OMB (63 FR 16500; April 3, 1998); and

(3) OMB's approval of the ICR (63 FR 47023; September 3, 1998) (References 3-2 through 3-4).

The Agency consulted with industry trade associations and visited a number of sites to develop the survey instruments and to ensure an accurate mailing list.

EPA distributed four industry surveys:

- U.S. EPA Collection of 1997 Iron and Steel Industry Data (detailed survey);
- U.S. EPA Collection of 1997 Iron and Steel Industry Data (Short Form) (short survey);
- U.S. EPA Collection of Iron and Steel Industry Wastewater Treatment Capital Cost Data (cost survey); and

- U.S. EPA Analytical and Production Data Follow-Up to the Collection of 1997 Iron and Steel Industry Data (analytical and production survey).

In October 1998, EPA mailed the detailed survey to 176 iron and steel sites and the short survey to 223 iron and steel sites. EPA designed the detailed survey for those iron and steel sites that perform any iron and steel manufacturing process. Those sites include integrated and non-integrated steel mills, as well as sites that were initially identified as stand-alone cokemaking plants, stand-alone sinter plants, stand-alone direct-reduced ironmaking plants, stand-alone hot forming mills, and stand-alone finishing mills. The short survey is an abbreviated version of the detailed survey. It was designed for stand-alone iron and steel sites with the exceptions of those that received the detailed survey. EPA mailed the cost survey and the analytical and production survey to subsets of the facilities that received the detailed or short survey to obtain more detailed information on wastewater treatment system costs, analytical data, and facility production. EPA mailed the cost survey to 90 iron and steel sites and the analytical and production survey to 38 iron and steel sites.

The detailed and short surveys were divided into two parts: Part A: Technical Information and Part B: Financial and Economic Information. The "Part A" technical questions in the detailed survey comprised four sections, with Sections 3 and 4 being combined in the short survey, as follows:

- Section 1: General Site Information;
- Section 2: Manufacturing Process Information;
- Section 3: In-Process and End-of-Pipe Wastewater Treatment and Pollution Prevention Information; and
- Section 4: Wastewater Outfall Information.

The financial and economic information in Part B of the detailed survey also comprised four sections, as shown below:

- Section 1: Site Identification;
- Section 2: Site Financial Information;
- Section 3: Business Entity Financial Information; and
- Section 4: Corporate Parent Financial Information.

Part B of the short survey contained a single section for site identification and financial information. More detailed descriptions of financial data collection and analysis are included in the Economic Analysis of Final Effluent Limitations Guidelines and Standards for the Iron and Steel Manufacturing Point Source Category (Reference 3-5).

The detailed survey requested detailed descriptions of all manufacturing processes and treatment systems on site. The short survey contained manufacturing process questions for

only forming and finishing operations. EPA eliminated the cokemaking, ironmaking, and steelmaking questions from the short survey because those processes were not applicable to the facilities that received the short survey. The Agency also reduced the amount of detail requested in the short survey. EPA used the detailed descriptions of hot forming mills from the integrated, non-integrated, and stand-alone hot forming mills to make assumptions about industry trends.

Part A Section 1 requested site contacts and addresses and general information regarding manufacturing operations, age, and location. The Agency used this information to develop the proposed subcategorization and applicability statements.

Part A Section 2 requested information on products, types of steel produced, production levels, unit operations, chemicals and coatings used, quantity of wastewater discharged from unit operations, miscellaneous wastewater sources, flow rates, pollution prevention activities, and air pollution control. The Agency used these data to evaluate manufacturing processes and wastewater generation, to develop the model production-normalized flow rates, and to develop regulatory options. EPA also used these data to develop the proposed subcategorization and applicability and to estimate compliance costs and pollutant removals associated with the regulatory options EPA considered for the final rule.

Part A Section 3 requested detailed information (including diagrams) on the wastewater treatment systems and discharge flow rates, monitoring analytical data, and operating and maintenance cost data (including treatment chemical usage). The Agency used these data to identify treatment technologies-in-place, to determine regulatory options, and to estimate compliance costs and pollutant removals associated with the regulatory options considered for the final rule.

Part A Section 4 requested permit information, discharge locations, wastewater sources to each outfall, flow rates, regulated pollutants and limits, and permit monitoring data. EPA used this information to calculate baseline or current loadings for each facility. The Agency also used this information to calculate the pollutant loadings associated with the regulatory options considered for the final rule.

The cost survey requested detailed capital cost data on selected wastewater treatment systems installed since 1993, including equipment, engineering design, and installation costs. (EPA chose 1993 because 1997 was the base year for the detailed and short surveys, and this provided the Agency with a five year range for collecting cost data on recently installed treatment systems.) EPA incorporated these data into a costing methodology and used them to determine incremental investment costs and incremental operating and maintenance costs associated with the regulatory options considered for the final rule.

The analytical and production survey requested detailed daily analytical and flow rate data for selected sampling points, and monthly production data and operating hours for selected manufacturing operations. The Agency used the analytical data collected to estimate baseline pollutant loadings and pollutant removals from facilities with treatment-in-place similar to the technology options considered for the final rule, to evaluate the variability associated with

iron and steel industry discharges, and to establish effluent limitations guidelines and standards. The Agency used the production data collected to evaluate the production basis for applying the proposal in National Pollutant Discharge Elimination System (NPDES) permits and pretreatment control mechanisms.

EPA mailed the iron and steel industry surveys by mail to facilities that were identified from the following sources:

- Association of Iron and Steel Engineers' 1997 and 1998 Directories: Iron and Steel Plants Volume 1, Plants and Facilities (Reference 3-6);
- Iron and Steel Works of the World (11th and 12th editions) directories (Reference 3-7);
- Iron and Steel Society's The Steel Industry of Canada, Mexico, and the United States: Plant Locations (Reference 3-8);
- Member lists from the following trade associations:
  - American Coke and Coal Chemicals Institute (Reference 3-9),
  - American Galvanizers Association (Reference 3-10),
  - American Iron and Steel Institute (Reference 3-11),
  - American Wire Producers Association (Reference 3-12),
  - Cold Finished Steel Bar Institute (Reference 3-13),
  - Specialty Steel Industry of North America (Reference 3-14),
  - Steel Manufacturers Association (Reference 3-15),
  - Steel Tube Institute of North America (Reference 3-16), and
  - Wire Association International (Reference 3-17);
- Dun & Bradstreet Facility Index Database (Reference 3-18);
- EPA's Permit Compliance System (PCS) Database (Reference 3-19);
- EPA's Toxic Release Inventory (TRI) Database (Reference 3-20);
- Iron and Steel Society's Iron and Steelmaker "Roundup" editions (Reference 3-21);
- 33 Metalproducing "Roundup" editions (Reference 3-22);
- 33 Metalproducing "Census of the North American Steel Industry" (Reference 3-23); and
- Thomas Register (Reference 3-24).

The Agency cross-referenced these sources with one another to develop a list of individual sites. Based on these sources, EPA identified 822 candidate facilities to receive surveys. These candidates include some steel finishing facilities that EPA may include in the Metal Products and Machinery (MP&M) Category under 40 CFR Part 438. To minimize the burden on the respondents, EPA grouped facilities into 12 strata. In general, EPA determined the strata based on its understanding of the manufacturing processes at each facility. Table 3-1 presents the stratification of the iron and steel industry for the surveys.

Depending on the amount or type of information EPA required for the rulemaking, EPA either solicited information from all facilities within a stratum (i.e., a census or "certainty" stratum) or selected a random sample of facilities within a stratum (i.e., statistically sampled stratum). EPA sent a survey to all facilities in the certainty strata (strata 5 and 8) because the Agency determined it was necessary to capture the size, complexity, or uniqueness of the steel operations at these sites. EPA also sent surveys to all facilities in strata 1 through 4 (all cokemaking sites, integrated steelmaking sites, and sintering and direct-reduced ironmaking sites) because of the relatively low number of sites in each stratum and because of the size, complexity, and uniqueness of raw material preparation and steel manufacturing operations at these sites. The Agency statistically sampled the remaining sites in strata 6, 7, and 9 through 12. EPA calculated survey weights for each selected facility based on the facility's probability of selection. If the Agency sent a survey to every facility in a stratum, each selected facility represents only itself and has a survey weight of one (1). For statistically sampled strata, each selected facility represents itself and other facilities within that stratum that were not selected to receive an industry survey. These facilities have survey weights greater than one (1). See Appendix A for more details.

Of the 822 candidate facilities, EPA mailed either a detailed survey or a short survey to 399 facilities.[1] Detailed survey recipients included integrated mills, non-integrated mills, stand-alone cokemaking sites, stand-alone sintering sites, stand-alone direct-reduced ironmaking sites, stand-alone hot forming sites, and stand-alone finishing sites. Short survey recipients included stand-alone cold forming sites, stand-alone pipe and tube sites, stand-alone hot dip coating sites, and stand-alone wire sites. Section 5 describes these types of sites. EPA received 378 completed surveys, including those from 33 sites that certified that they were not engaged in iron and steel activities. Eleven survey recipients did not respond and, thus, are considered nonrespondents. The non-respondents consisted of non-integrated sites, stand-alone pipe and tube sites, and stand-alone wire sites. Finally, EPA did not receive responses from another ten survey recipients: seven of these sites were closed (i.e., the surveys were undeliverable), two sites were considered part of a third site owned by the same company (i.e., responses regarding the operations from those two sites were included with the response for the third site), and one site received two surveys under two mailing addresses and completed only one survey.

[1]Before the surveys were actually mailed, the Agency notified potential survey recipients. One site, randomly selected from stratum 12 and notified that it would be receiving a survey, notified the Agency that it was not engaged in iron and steel activities. The Agency decided not to mail a survey to that site. Therefore, this site was not included in the 399 facilities receiving surveys.

One hundred fifty-four of the returned surveys were from sites with operations that were later determined to be within the proposed scope of the MP&M Category. Similarly, two recipients of MP&M surveys were determined to be within the scope of the Iron and Steel Category. Therefore, the Agency used the data from 191 returned surveys and the two MP&M industry surveys in the development of the final rule.

Once the Agency completed a review of the detailed and short surveys and defined the technology options, EPA identified survey respondents who had installed wastewater treatment systems in the last 10 years (since 1990) that were similar to the technology options and mailed them the cost survey. Of the 90 cost survey recipients, 88 returned completed surveys. EPA selected 38 facilities to receive the analytical and production survey who had indicated in the detailed or short survey that: (1) they had treatment trains similar to the treatment technology options, (2) they had collected analytical data for that treatment train, (3) they had a treatment train with a dedicated outfall from which EPA could evaluate performance, and (4) they did not add excessive dilution water to the outfall before sampling. All 38 analytical and production survey recipients returned completed surveys. EPA included in the public record all information and data collected in the surveys for which sites have not asserted claims of confidential business information under 40 CFR Part 2, Subpart B.

3.3 Site Visits

EPA conducted 67 site visits at iron and steel facilities in 19 states and Canada between January 1997 and June 1999. In response to comments received on the proposed rule, the Agency conducted an additional seven site visits at iron and steel facilities in five states between January and November 2001. Some of the additional site visits were to sites that had previously been visited by the Agency. Table 3-2 presents the number of sites visited in each state. However, sites that were visited more than once were not counted more than once.

The purpose of the site visits was to collect information about each site's manufacturing processes, water management practices, and treatment technologies, and to evaluate each facility for potential inclusion in the sampling program. EPA also used information collected during site visits to help develop the industry surveys. EPA selected sites to visit based on the type of site (as described in Section 5.1), the manufacturing operations at each facility, the type of steel produced (carbon, alloy, stainless), and the wastewater treatment operations. The Agency wanted to visit all types of iron and steel manufacturing operations as well as all types of wastewater treatment operations, including recently installed treatment systems. Before EPA received any completed surveys, the Agency used information collected from the sources used to develop the survey database to select sites to visit. After EPA evaluated the completed surveys, the Agency used information provided by the sites to select additional sites to visit. Table 3-3 summarizes the number of sites visited both before and after proposal for each type of site. However, sites that were visited more than once were not counted more than once.

EPA collected detailed information during each site visit on the manufacturing processes, wastewater generation, in-process treatment and recycling systems, wastewater

management practices and pollution prevention, end-of-pipe treatment technologies, and, if the facility was a candidate for sampling, the logistics of collecting samples. The Agency observed the following manufacturing processes: coke plants, sinter plants, briquetting plants, blast furnaces, direct-reduced ironmaking plants, an iron carbide plant, basic oxygen furnaces, electric arc furnaces, vacuum degassers, ladle metallurgy stations, continuous and ingot casting facilities, hot forming mills (including forging mills), and cold forming mills. The Agency also observed acid pickling, descaling, and surface cleaning and coating operations (i.e., manufacturing lines or areas with acid cleaning, alkaline cleaning, annealing, electroplating, and/or hot dip coating operations). Table 3-4 summarizes the number of sites visited both before and after proposal that performed any of these manufacturing processes. However, sites that were visited more than once were not counted more than once.

EPA observed in-process wastewater treatment and recycling systems, pretreatment systems, and end-of-pipe wastewater treatment systems that were either dedicated to a manufacturing process or shared by multiple processes. The Agency observed the following wastewater treatment operations: biological treatment, metals precipitation, solids settling, alkaline chlorination, and filtration systems.

In response to comments received on the proposed rule, the Agency visited seven additional sites for the following reasons:

- Additional coke plants - To better understand coke plant wastewater sources and how flows might be reduced, and to review physical/chemical treatment and biofiltration at coke plants to understand the differences between these technologies and conventional activated sludge systems;

- Additional hot strip mill wastewater treatment systems - To determine modifications required to achieve the proposed BAT limitations; and

- Additional finishing operations - To assess rinsewater flow rates for finishing operations; to understand how finishing operation flow rates relate to product quality considerations; to determine typical flow control equipment and monitoring practices necessary to operate rinses effectively at finishing lines; and to collect investment cost and operating and maintenance cost data for flow controls and the installation of countercurrent rinse tanks on finishing lines.

EPA included in the public record all information and data collected during site visits for which sites have not asserted claims of confidential business information under 40 CFR Part 2, Subpart B.

3.4 Sampling

After evaluating information obtained during the site visits, EPA conducted wastewater sampling at 16 sites between June 1997 and June 1999. EPA selected these sites using the following criteria:

- The site performed operations either currently regulated under 40 CFR Part 420 or identified in the Preliminary Study or otherwise identified as iron and steel operations;
- The site performed high-rate recycling, in-process treatment, or end-of-pipe treatment operations that EPA believed may represent potential model pollutant control technology; and
- The site's compliance monitoring data indicated that it was among the better performing pollutant control systems in the industry, based on comparisons of monitoring data from other facilities with limits from the 1982 regulation in their permits.

In response to comments received on the proposed rule, EPA conducted wastewater sampling at four additional sites between November 2000 and April 2001. EPA selected these additional sites for the following reasons:

- As a collaborative effort between the American Iron and Steel Institute and EPA, to supplement the 1997/1998 sampling results by further characterizing raw sinter plant wastewater, specifically the amount of dioxins and furans generated by this industry, and to evaluate wastewater treatment system performance; and
- To further characterize untreated wastewater generated by continuous casting and hot forming operations at non-integrated steel mills.

Table 3-5 shows the type and number of manufacturing processes sampled during the EPA sampling program, both before and after proposal.

During the 16 initial sampling episodes, EPA collected samples of untreated process wastewater (treatment system influents), treatment system effluents, source water to characterize background concentrations, and other samples to characterize the performance of individual treatment units. During the additional four sampling episodes, EPA collected samples of untreated process wastewater (treatment system influents), treatment system effluents, and source water to characterize background concentrations. Table 3-6 summarizes all of the treatment systems sampled during the sampling program.

In general, the Agency collected 24-hour composite samples from wastewater sampling points each day of each sampling episode. Exceptions to this rule included samples

collected for volatile organics analysis and oil and grease (O&G), which EPA collected as multiple grab samples over each 24-hour period (laboratory personnel composited the volatile organics samples before analysis, while EPA mathematically composited the O&G analytical results after the analyses were performed). EPA collected a one-time grab sample from each water source contributing to the manufacturing processes sampled. The Agency collected all waste oil and treatment system sludge samples as one-time grab samples.

EPA analyzed wastewater samples for up to approximately 300 analytes spanning the following pollutant classes: conventional, priority, and nonconventional pollutants, including metals, volatile organic compounds, semivolatile organic compounds, and dioxins and furans. Analyte selection was based on knowledge of the manufacturing processes and raw materials used. EPA generally collected samples using the following protocol:

- Five consecutive days of samples for conventionals, nonconventional and priority metals, and certain other nonconventional pollutants, including total suspended solids (TSS), total dissolved solid (TDS), chlorides, fluorides, sulfates, total organic carbon (TOC), chemical oxygen demand (COD), total Kjeldahl nitrogen (TKN), nitrate/nitrite, ammonia as nitrogen, and total phenols;

- Five consecutive days of samples from biological treatment systems for five-day biochemical oxygen demand (BOD_5) and five-day carbonaceous biochemical oxygen demand ($CBOD_5$);

- Five consecutive days of samples of cokemaking, blast furnace ironmaking, and sintering wastewater for total sulfide, thiocyanate, amenable cyanide, total cyanide, and weak acid dissociable (WAD) cyanide;

- Five consecutive days of samples of cokemaking wastewater for organics and dioxins/furans;

- Three days of samples, usually consecutive, of all noncokemaking wastewater for organics;

- Two days of samples, usually consecutive, of blast furnace ironmaking, sintering, and basic oxygen furnace steelmaking wastewater for dioxins/furans;

- Five consecutive days of samples from carbon and alloy steel finishing treatment systems containing chromium-bearing wastewater from electroplating or hot coating operations, and from stainless steel finishing treatment systems for hexavalent chromium; and

- On six occasions (one cokemaking plant, two sintering operations, one direct-reduced ironmaking plant, and two non-integrated steel mills), the Agency performed a one-day raw wastewater characterization sampling for pollutants of concern.

Table 3-7 shows the EPA analytical methods used and parameters analyzed for during the sampling program, the manufacturing processes for which the analyte or analyte group was analyzed, and the general frequency with which samples were collected during the sampling program. EPA analyzed one-time grab waste oil and sludge samples for metals, volatile and semivolatile organic compounds, total phenols, and dioxins/furans, depending on the treatment system from which they were collected. Table 3-8 lists the specific analytes included within the following analyte groups: dioxins/furans, metals, volatile organics, and semivolatile organics.

EPA used the analytical results from untreated samples to characterize the industry, develop the list of pollutants of concern, and develop raw wastewater characteristics. EPA used data from both untreated wastewater samples, intermediate treatment samples, and treated effluent samples to evaluate treatment system performance, develop pollutant loadings and removals, and develop the technology options for the iron and steel industry. EPA used data collected from treated effluent sampling points to calculate the long-term averages (LTAs) and limitations for each of the regulatory options considered for the final rule. During each sampling episode, EPA also collected flow rate data corresponding to each sample collected and production information from each associated manufacturing operation for use in calculating pollutant loadings and production-normalized flow rates. EPA included in the public record all information and data collected during sampling episodes for which sites have not asserted claims of confidential business information under 40 CFR Part 2, Subpart B, or that would not otherwise disclose confidential business information because of small strata sizes or previously released information.

3.5 Other Data Sources

EPA evaluated existing data sources to collect technical and financial information about the iron and steel industry, as discussed below.

The Agency collected technical information from iron and steel industry trade journals published from 1985 through 1997 as well as information from Iron and Steel Society conference proceedings. Trade journals included Iron and Steel Engineer, published by the Association of Iron and Steel Engineers (AISE) (Reference 3-25), Iron and Steelmaker, published by the Iron and Steel Society (ISS) (Reference 3-26), and New Steel (formerly Iron Age), published by Chilton Publications (Reference 3-27). EPA obtained the following types of information from these sources: storm-water and wastewater issues, new and existing wastewater treatment technologies, wastewater treatment and manufacturing equipment upgrades and installations, and company mergers, acquisitions, and joint ventures. EPA also used these sources to identify facilities for potential site visits.

EPA consulted the following publications: Census Manufacturers - Industry Series and Current Industrial Reports (U.S. Bureau of the Census) (References 3-28 and 3-29); World Steel Dynamics (Paine Webber) (References 3-30 through 3-36); and The Annual Statistical Report (American Iron and Steel Institute) (Reference 3-37). These sources provided a variety of financial information, ranging from aggregate data on employment and payroll to steel shipments by product, grade, and market.

The Agency performed searches on the following on-line databases: Pollution Abstracts, Water Resources Abstracts, Engineering Index, Material Business File, National Technical Information Service (NTIS), Enviroline, Compendex, and Metadex (References 3-38 through 3-45) to collect information on wastewater treatment technology and pollution prevention practices used in the iron and steel industry. The Agency also searched EPA's TRI (Reference 3-20) and PCS databases (Reference 3-19) to determine what pollutants were reported by the industry. In addition, the Agency reviewed secondary sources, including data, reports, and analyses published by government agencies; reports and analyses published by the iron and steel industry and its associated organizations; and publicly available financial information compiled by both government and private organizations to collect additional financial information.

The Agency used the Fate of Priority Pollutants in Publicly Owned Treatment Works (Reference 3-46), commonly referred to as the "50-POTW Study," as the primary source of POTW percent removal data, described in more detail in the POTW pass-through methodology in Section 12.2.2. However, the 50-POTW Study did not contain data for all pollutants subject to the pass-through analysis. Therefore, EPA obtained additional data from EPA's National Risk Management Research Laboratory (NRMRL)'s Treatability Database (formerly called the Risk Reduction Engineering Laboratory (RREL) Treatability Database) (Reference 3-47). Finally, EPA used data submitted in comments on the proposal from POTWs that accept iron and steel wastewater to supplement the POTW pass-through analysis.

3.6 Public Participation

EPA encouraged participation of all interested parties throughout the development of the iron and steel category effluent limitations guidelines and standards. EPA conducted outreach with the following trade associations, which represent the vast majority of iron and steel facilities: American Iron and Steel Institute (AISI), Steel Manufacturers Association (SMA), Specialty Steel Industry of North America (SSINA), Cold Finished Steel Bar Institute (CFSBI), Wire Association International, Incorporated (WAI), American Wire Producers Association (AWPA), Steel Tube Institute of North America (STINA), American Galvanizers Association, Incorporated (AGA), and American Coke and Coal Chemicals Institute (ACCCI). EPA met on several occasions with various industry representatives to discuss aspects of the regulation development. EPA also participated in industry meetings and presented updates on the status of the regulation development.

Because some facilities affected by the revised rulemaking are indirect dischargers, the Agency made a concerted effort to consult with pretreatment coordinators and state and local entities who will be responsible for implementing the iron and steel regulation.

EPA sponsored five stakeholder meetings between December 1998 and January 2000. Four were held in Washington, D.C. and one was held in Chicago, Illinois. The primary objectives of the meetings were to present the Agency's thinking regarding the technology bases for the proposed revisions to 40 CFR Part 420 and to seek dialogue, discuss issues, and obtain new ideas from interested stakeholders, including industry representatives and members of environmental groups such as the Natural Resources Defense Council (NRDC), the Environmental Defense Fund (now Environmental Defense), Atlantic States Legal Foundation, Friends of the Earth, and Save the Dunes.

During the stakeholder meetings, EPA presented process flow diagrams showing preliminary technology options and potential best management practices (BMPs) that may be incorporated into a revised Part 420 and/or included in NPDES permit and pretreatment guidance. The presentations were organized by type of manufacturing process. In addition to soliciting comments on the preliminary options, EPA requested ideas from the stakeholders to identify useful incentives for greater pollution control.

At the meetings, EPA encouraged participants to supplement their oral statements with written comments and supporting data. In that regard, EPA provided a set of data quality protocols for use when submitting data for the iron and steel rulemaking effort. This handout, along with all other handouts and meeting summaries, is posted on EPA's iron and steel industry web site at *http://www.epa.gov/OST/ironsteel/*. All of the materials presented at the stakeholder meetings, as well as meeting summaries and any written comments from participants not containing confidential business information, are also in the public record.

Following the publication of the proposal, the Agency held a pretreatment hearing and public meeting on February 20, 2001 in Washington, D.C. to summarize the proposed rulemaking, to provide answers to questions posed by the audience, and to listen to comments pertaining to the proposed pretreatment standards. During the public meeting portion, the Agency presented a summary of the proposal, including background information on the effluent guidelines, the purpose of the rule, the general applicability and interface with the MP&M rule, data collection activities, subcategorization, proposed technology options, proposed regulated pollutants, total costs and removals, general implementation, and economic impacts. Following the public meeting, the Agency held the pretreatment hearing. Two representatives from three of the major trade associations (AISI, SSINA, and SMA) provided orals comments. These comments are included in Section 12.2 of the Iron and Steel Administrative Record.

EPA met with members of ACCCI on February 6, 2001. During this meeting, members of the trade association presented general information on the merchant coke industry and information on the economic effects of increased imports, decreased demand for coke, new and continuing regulatory burdens in addition to this rule, and coke battery upgrades, repairs, and rehabilitation on the merchant coke industry. All of the materials presented at this meeting are included in Section 12.3.1 of the Iron and Steel Administrative Record.

Between April 20 and 26, 2001, the Agency met with members of SMA, SSINA, and AISI in a series of meetings over four days. During the meetings, EPA presented plots

showing facility production-normalized flows for each subcategory and segment to complement discussions of the Agency's rationale for developing production-normalized flows. Industry representatives provided several handouts to complement discussions of issues related to alkaline chlorination design and performance, variability in cokemaking wastewater sources and volumes, variability in hot forming wastewater flow and intake water quality, and general stainless steel production processes. All of the materials presented at these meetings, as well as summaries of the meetings, are included in Section 12.3.2 of the Iron and Steel Administrative Record.

EPA met with members of ACCCI, AISI, SMA, and SSINA on November 15, 2001 as a follow-up to the April meetings. The intent of this meeting was to provide an overview of EPA activities subsequent to proposal in response to public comments. A summary of this meeting is included in Section 12.3.3 of the Iron and Steel Administrative Record.

All of the materials presented at all of the meetings following the publication of the proposal, as well as meeting summaries, data submitted, and any written comments from participants not containing confidential business information, are in the public record.

3.7 Summary of Post-Proposal Data Collected

EPA received 42 comments on the iron and steel proposal. From these comments, EPA obtained additional data and information from the industry and POTWs, including monitoring data and information related to cost of treatment and pass-through of pollutants at POTWs. Monitoring data submitted included the following:

- Five years of effluent data from a POTW that receives cokemaking wastewater;
- Three and a half years of average monthly influent data, effluent data, and the percent removal for ammonia and phenol from a POTW that receives cokemaking wastewater;
- A summary of aeration tank influent and effluent data and biofilter effluent data for thiocyanate from a POTW that receives cokemaking wastewater;
- A summary of existing effluent quality data for the nine merchant coke plants;
- One year of biweekly self-monitoring effluent data from a finishing treatment system without alkaline precipitation and ferric coprecipitation;
- One week of self-monitoring grab samples of the influent to and the effluent from a chromium (VI) reduction system; and

- A summary of influent and effluent pollutant concentrations and pollutant removal percent removal rates for all of the proposed regulated pollutants from a POTW that receives wastewaters from all of the subcategories.

EPA used these data to supplement its analyses and findings for the final rule.

The Agency also received comparisons of the industry estimates for costs to achieve the proposed BAT limitations and the estimates calculated by EPA for the nine merchant coke plants, two integrated mills, and a stand-alone cokemaking plant. Where appropriate, the Agency used these data to revise the cost estimates to achieve compliance with BAT.

The Agency requested and received self-monitoring data from six non-integrated steelmaking sites, ironmaking data from one integrated mill, and ammonia still influent data from two coke plants and effluent data from one coke plant. From the industry meetings following publication of the proposal, EPA received three years of monthly hot forming mill treatment plant effluent data (1998 to 2000) for zinc, five years of daily cokemaking treatment plant effluent data for thiocyanate, five years of discharge monitoring reports (DMR) data from a cokemaking treatment plant, and three years of DMR data from a cokemaking treatment plant as well as influent data for cyanide and selenium. EPA used these data to augment its datasets used to develop the model LTAs, to update the site-specific and average subcategory baseline pollutant concentrations, to further assess ammonia still operation, and to supplement other analyses and findings for the final rule.

All of the data submitted that do not contain confidential business information are in the public record.

3.8 References

3-1 U.S. Environmental Protection Agency. Information Collection Request, U.S. Environmental Protection Agency Collection of 1997 Iron and Steel Industry Data. EPA ICR 1830.01. Washington, DC, March 1998.

3-2 Agency Announcement of Information Collection Activities: 1997 Iron and Steel Industry Survey (EPA ICR No. 1830.01). Federal Register: October 20, 1997 (Volume 62, Number 202, Pages 54453-54454).

3-3 Agency Announcement of Information Collection Activities: Submission for OMB Review; Comment Request; Collection of 1997 Iron and Steel Industry Data (EPA ICR 1830.01). Federal Register: April 3, 1998 (Volume 63, Number 64, Pages 16500-16501).

3-4 Agency Information Collection Activities; OMB Responses. Federal Register: September 3, 1998 (Volume 63, Number 171, Page 47023-47024).

3-5 U.S. Environmental Protection Agency. Economic Analysis of Final Effluent Limitations Guidelines and Standards for the Iron and Steel Manufacturing Point Source Category, EPA 821-R-02-006, Washington, DC, December 2000.

3-6 Association of Iron and Steel Engineers. Directory: Iron and Steel Plants Volume 1, Plants and Facilities. Pittsburgh, PA, 1997 and 1998.

3-7 Iron and Steel Works of the World (11th and 12th edition). Metal Bulletin Books Ltd., Surrey, England, 1994 and 1997.

3-8 Iron and Steel Society. The Steel Industry of Canada, Mexico, and the United States: Plant Locations. Warrendale, PA, 1995.

3-9 American Coke and Coal Chemicals Institute. Member List. 1997.

3-10 American Galvanizers Association. Member List. 1997.

3-11 American Iron and Steel Institute. Member List. 1998.

3-12 American Wire Producers Association. Member List. 1997.

3-13 Cold Finished Steel Bar Institute. Member List. 1997.

3-14 Specialty Steel Industry of North America. Member List. 1997.

3-15 Steel Manufacturers Association. Member List. 1997.

3-16 Steel Tube Institute of North America. Member List. 1997.

3-17 Wire Association International. Member List. 1997.

3-18 Dun & Bradstreet. Facility Index Database. 1997.

3-19 U.S. EPA. Permit Compliance System (PCS) Database.

3-20 U.S. EPA. Toxic Release Inventory (TRI) Database. 1995.

3-21 Iron and Steel Society. Iron and Steelmaker, "Roundup: Electric Arc Furnace," May 1996 and May 1997; "Roundup: Blast furnace," August 1996 and August 1997; "Roundup: Continuous Caster," November 1996 and November 1997.

3-22 33 Metalproducing. "Roundup." Penton Publications, Cleveland, OH, May 1989 and May 1991.

3-23 33 Metalproducing. "Census of the North American Steel Industry." Penton Publications, Cleveland, OH, March 1996, July 1996, September 1996, October 1996, November 1996, and March 1997.

3-24 Thomas Register. Thomas Publishing Company, New York, NY, 1996.

3-25 Association of Iron and Steel Engineers (AISE). Iron and Steel Engineer. Pittsburgh, PA, 1985 through 1997.

3-26 Iron and Steel Society (ISS). Iron and Steelmaker. Warrendale, PA, 1985 through 1997.

3-27 New Steel (formerly Iron Age). Chilton Publications. 1985 through 1997.

3-28 U.S. Bureau of the Census. Census Manufacturers - Industry Series. 1992.

3-29 U.S. Bureau of the Census. Current Industrial Reports. 1992.

3-30 Paine Webber. World Steel Dynamics. "Steel's Thin-Slab/ Flat-Rolling Revolution: Provoking Changed." January 1996.

3-31 Paine Webber. World Steel Dynamics. "Steel Dynamics Inc. Progress Report." May 1996.

3-32 Paine Webber. World Steel Dynamics. "PriceTrack # 55." April 1997.

3-33 Paine Webber. World Steel Dynamics. "Trico Steel: Raising the Ante in Steel's Flat-Rolling Revolution." June 1997.

3-34 Paine Webber. World Steel Dynamics. " PriceTrack #56." August 1997.

3-35 Paine Webber. World Steel Dynamics. "Flat-Rolled Process-by-Process Costs." December 1997.

3-36 Paine Webber. World Steel Dynamics. "Long Product Process-by-Process Costs." December 1997.

3-37 American Iron and Steel Institute. The Annual Statistical Report. 1997.

3-38 Pollution Abstracts (on-line).

3-39 U.S. Geological Survey. Water Resources Abstracts (on-line).

3-40 Engineering Index (on-line).

3-41 Material Business File (on-line).

3-42 U.S. Environmental Protection Agency. National Technical Information Service (NTIS) (on-line).

3-43 Congressional Information Service, Inc. Enviroline (on-line).

3-44 Engineering Information, Inc. Compendex (on-line).

3-45 Cambridge Scientific Abstracts. Metadex (on-line).

3-46 U.S. Environmental Protection Agency. Fate of Priority Pollutants in Publicly Owned Treatment Works. EPA 440/1-82/303. Washington, DC, September 1982.

3-47 U.S. Environmental Protection Agency. National Risk Management Research Laboratory (NRMRL) Treatability Database Version 5.0. Cincinnati, OH, 1994.

3-48 U.S. Environmental Protection Agency. Preliminary Study of the Iron and Steel Category, 40 CFR Part Effluent Limitations Guidelines and Standards. EPA 821-R-95-037, Washington, DC, September 1995.

3-49 U.S. Environmental Protection Agency. Development Document for the Proposed Effluent Limitations Guidelines and Standards for the Iron and Steel Manufacturing Point Source Category. EPA 821-B-00-011, Washington, DC, December 2000.

Table 3-1

Iron And Steel Industry Survey Strata

Stratum Number	Stratum Name	Number of Sites in Stratum	Number of Sites Receiving Surveys
1	Integrated steel sites with cokemaking	9	9
2	Integrated steel sites without cokemaking	12	12
3	Stand-alone cokemaking sites	16	16
4	Stand-alone direct-reduced ironmaking and sintering sites	5	5
5	Detailed survey certainty stratum (a)(b)	60	60
6	Non-integrated steel sites	69	40
7	Stand-alone finishing sites and stand-alone hot forming sites	54	35
8	Short survey certainty stratum (b)(c)(d)	13	13
9	Stand-alone cold forming sites (d)	62	37
10	Stand-alone pipe and tubes sites (d)	164	59
11	Stand-alone hot coating sites (d)	106	49
12	Stand-alone wire sites (d)	252	67
	Total	**822**	**402**

(a) This stratum includes facilities from strata 6 and 7.
(b) These strata each include data transferred from one site that received an MP&M survey.
(c) This stratum includes facilities from strata 9 through 12.
(d) These strata include returned surveys from the 154 sites with operations that were later determined to be within the scope of the proposed MP&M Category.

Table 3-2

Number of Sites Visited in Each State and in Canada

State	Number of Sites Visited
Alabama	7
Arizona	1
Arkansas	1
California	2
Canada	2
Illinois	6
Indiana	9
Kentucky	1
Louisiana	1
Maryland	2
Michigan	3
New York	2
Ohio	10
Oregon	1
Pennsylvania	12
South Carolina	1
Texas	2
Utah	2
Virginia	2
West Virginia	3

Table 3-3

Number of Sites Visited for Each Type of Site

Type of Site	Number of Sites Visited
Integrated mill with cokemaking	10
Integrated mill without cokemaking	10
Stand-alone cokemaking plant	15
Stand-alone sintering plant (a)	1
Stand-alone direct-reduced ironmaking plant (b)	1
Non-integrated mill	16
Stand-alone hot forming mill	1
Stand-alone finishing mill	11
Stand-alone pipe and tube mill	4
Stand-alone iron carbide mill	1

(a) EPA visited seven additional sintering plants at integrated mills.
(b) EPA visited one additional direct-reduced ironmaking mill at a non-integrated mill.

Table 3-4

Number of Sites Visited With Each Type of Manufacturing Process

Manufacturing Process	Number of Sites Visited with Each Type of Manufacturing Process
Cokemaking	25
Sintering	8
Briquetting	4
Blast furnace ironmaking	20
Direct-reduced ironmaking	2
Iron carbide	1
Basic oxygen furnace steelmaking	19
Electric arc furnace steelmaking	19
Vacuum degassing	18
Ladle metallurgy	34
Casting (a)	33
Hot forming (b)	36
Cold forming	34
Acid pickling or descaling	28
Surface cleaning and coating (c)	28

(a) Casting operations include ingot casting and continuous casting.
(b) Hot forming operations include hot rolling, forging, seamless pipe and tube, and butt-welded pipe and tube operations.
(c) Surface cleaning and coating operations include acid cleaning, alkaline cleaning, annealing, electroplating, and hot coating operations.

Table 3-5

Manufacturing Processes Sampled

Manufacturing Process	Number of Processes Sampled
Cokemaking	4
Sintering	4
Blast furnace ironmaking	3
Direct-reduced ironmaking	1
Basic oxygen furnace steelmaking	5
Vacuum degassing	2
Continuous casting	8
Hot forming (a)	9
Descaling	2
Acid pickling	7
Cold forming	5
Surface cleaning or coating (b)	4

(a) Hot forming operations sampled include hot rolling, seamless pipe and tube, and butt-welded pipe and tube operations.
(b) Surface cleaning and coating operations include acid cleaning, alkaline cleaning, annealing, electroplating, and hot coating operations.

Table 3-6

Treatment Systems Sampled

Treatment System	Treatment System Description	Samples Collected
1	Coke plant treatment system with ammonia stripping and biological treatment	Ammonia still influent, ammonia still effluent, biological treatment system effluent
2	Coke plant treatment system with ammonia stripping and biological treatment	Ammonia still influent, ammonia still effluent, biological treatment system effluent
3	Coke plant treatment system with ammonia stripping, biological treatment, and sand and granular activated carbon filtration	Flushing liquor, by-products recovery wastewater, equalization tank effluent, biological treatment system effluent, sand filter effluent, carbon filter effluent
4	Coke plant treatment system with ammonia stripping and biological treatment	Ammonia still influent, ammonia still effluent, biological treatment system effluent
5	Sinter plant treatment system	Sinter plant untreated wastewater, treatment system effluent
6	Sinter plant treatment and high-rate recycle system	Sinter plant untreated wastewater, treatment system effluent
7	Blast furnace and sinter plant treatment system	Sinter plant untreated wastewater, combined recycle water
8	Blast furnace and sinter plant blowdown treatment and high-rate recycle system	Blast furnace scrubber untreated wastewater, sinter plant scrubber untreated wastewater, blast furnace treatment blowdown, sinter plant treatment blowdown, combined final effluent, treatment system filter cake
9	Blast furnace treatment and high-rate recycle system	Blast furnace untreated wastewater, recycle wastewater, filter press sludge
10	Blast furnace treatment and high-rate recycle system	Blast furnace untreated wastewater, treatment system blowdown, treatment system filter cake
11	Direct-reduced iron treatment and high-rate recycle system	Clarifier influent, sand filter influent, treatment system effluent
12	Basic oxygen furnace treatment and high-rate recycle system	Basic oxygen furnace untreated wastewater, recycle water
13	Basic oxygen furnace blowdown treatment system	Classifier effluent, thickener effluent, treatment system effluent, vacuum filter cake

Table 3-6 (Continued)

Treatment System	Treatment System Description	Samples Collected
14	Steelmaking (vacuum degasser, continuous caster) treatment and high-rate recycle system	Vacuum degasser untreated wastewater, clarifier overflow, filter effluent, continuous caster untreated wastewater, treatment system effluent
15	Basic oxygen furnace treatment and high-rate recycle system	Basic oxygen furnace untreated wastewater, untreated gas cooling water, thickener overflow, drum filter sludge, filter press sludge
16	Steelmaking (basic oxygen furnaces, vacuum degasser, continuous casters) treatment and high-rate recycle system	Continuous caster untreated wastewater, vacuum degasser untreated wastewater, clarifier underflow, thickener underflow, treatment system blowdown
17	Continuous caster treatment and high-rate recycle system	Scale pit influent
18	Continuous caster treatment and high-rate recycle system	Scale pit influent
19	Continuous caster treatment and high-rate recycle system	Scale pit influent, treatment system effluent
20	Continuous caster treatment and high-rate recycle system	Continuous caster untreated wastewater, sand filter effluent
21	Continuous caster treatment and high-rate recycle system	Continuous caster scale pit influent, sand filter effluent
22	Continuous caster treatment and high-rate recycle system	Continuous caster untreated wastewater, treatment system effluent, scale pit waste oil
23	Hot strip mill treatment and high-rate recycle system	Hot strip mill untreated wastewater, treatment system effluent
24	Hot strip mill treatment and high-rate recycle system	Continuous caster untreated wastewater, vacuum degasser untreated wastewater, hot strip mill untreated wastewater, treatment system blowdown
25	Hot strip mill treatment and high-rate recycle system	Roughing mill untreated wastewater, finishing mill untreated wastewater, roughing mill sand filter effluent, finishing mill sand filter effluent, waste oil
26	Hot strip mill blowdown treatment and high-rate recycle system	Hot strip mill untreated wastewater, treatment system blowdown

Table 3-6 (Continued)

Treatment System	Treatment System Description	Samples Collected
27	Hot strip mill treatment and high-rate recycle system	Hot mill scale pit influent, treatment system effluent, scale pit waste oil
28	Hot mill treatment and high-rate recycle system	Hot mill untreated wastewater, treatment system effluent, blowdown treatment system effluent, scale pit waste oil
29	Hot strip mill treatment and high-rate recycle system	Sand filter influent, treatment system effluent
30	Oily wastewater treatment system	Oily wastewater influent, treatment system effluent
31	Plate mill treatment system	Scale pit influent, scale pit effluent, scale pit waste oil
32	Rolling mill treatment and high-rate recycle system	Scale pit influent
33	Rolling mill treatment and high-rate recycle system	Scale pit influent
34	Steel finishing chemical precipitation system	Acid pickling untreated wastewater, galvanizing untreated wastewater, sand filter influent, sand filter effluent
35	Steel finishing chemical precipitation system with chromium reduction pretreatment	Acid pickling untreated wastewater, chromium reduction pretreatment influent, chromium reduction pretreatment effluent, sand filter influent, sand filter effluent
36	Steel finishing chemical precipitation system with chromium reduction pretreatment	Acid pickling untreated wastewater, cold forming untreated wastewater, electrogalvanizing untreated wastewater, hot dip coating untreated wastewater, oily wastewater, chromium reduction pretreatment effluent, intermediate treatment, final effluent
37	Steel finishing chemical precipitation system	Acid pickling untreated wastewater, cold forming untreated wastewater, treatment system influent, treatment system effluent
38	Steel finishing chemical precipitation system with chromium reduction pretreatment	Acid pickling untreated wastewater, descaling untreated wastewater, chromium reduction pretreatment effluent, treatment system effluent
39	Steel finishing chemical precipitation system	Electroplating solution, treatment system influent, clarifier effluent, sand filter effluent

Table 3-6 (Continued)

Treatment System	Treatment System Description	Samples Collected
40	Steel finishing chemical precipitation system	Acid pickling untreated wastewater, oily wastewater, treatment system effluent
41	Steel finishing chemical precipitation system with oily wastewater pretreatment and chromium pretreatment	Continuous annealing untreated wastewater, alkaline cleaning untreated wastewater, electroplating untreated wastewater, hot dip coating untreated wastewater, acid pickling untreated wastewater, oily wastewater pretreatment influent, oily wastewater pretreatment effluent, chromium reduction pretreatment influent, chromium reduction pretreatment effluent, treatment system influent, treatment system effluent
42	Steel finishing chemical precipitation system	Acid pickling untreated wastewater, electrogalvanizing untreated wastewater, treatment system effluent

Table 3-7

Analytical Methods Used During Sampling Program

EPA Method	Parameter	Manufacturing Processes	Typical Sampling Frequency (Days/Episode)
160.2	Total suspended solids (TSS)	All	5
160.1	Total dissolved solids (TDS)	All	5
325.1, 325.2, or 325.3	Chlorides	All	5
340.1, 340.2, or 340.3	Fluorides	All	5
375.1, 375.3, or 375.4	Sulfates	All	5
150.1	pH	All	5
415.1	Total organic carbon (TOC)	All	5
410.1, 410.2, or 410.4	Chemical oxygen demand (COD)	All	5
351.1, 351.2, 351.3, or 351.4	Total Kjeldahl nitrogen (TKN)	All	5
353.1, 353.2, or 353.3	Nitrate/nitrite	All	5
350.1, 350.2, or 350.3	Ammonia as nitrogen	All	5
405.1 or 5210B	Five-day biochemical oxygen demand (BOD_5)	Cokemaking	5
405.1 or SM5210	Five-day carbonaceous biochemical oxygen demand ($CBOD_5$)	Cokemaking	5
1664	Hexane extractable material (oil and grease)	All	5
1664	Silica-gel treated hexane extractable material (total petroleum hydrocarbons)	All	5
420.1 or 420.2	Total phenols	All	5
376.1, 376.2, or D4658	Total sulfide	Cokemaking, blast furnace ironmaking, sintering	5
4500CN Part M	Thiocyanate	Cokemaking, blast furnace ironmaking, sintering	5

Table 3-7 (Continued)

EPA Method	Parameter	Manufacturing Processes	Typical Sampling Frequency (Days/Episode)
335.1, 335.2, and 1677	Cyanide (amenable), cyanide (total), and weak acid dissociable cyanide (WAD), respectively	Cokemaking, blast furnace ironmaking, sintering	5
1613B	Dioxins/furans	Cokemaking, blast furnace ironmaking, sintering, basic oxygen furnace steelmaking	2 (blast furnace ironmaking, sintering, basic oxygen furnace steelmaking) 5 (cokemaking)
218.4	Hexavalent chromium	Chromium-bearing electroplating and hot coating wastewater from carbon and alloy finishing operations, stainless steel finishing operations	5
1620	Metals	All	5
1624C	Volatile organics	All	3 5 (cokemaking)
1625C	Semivolatile organics	All	3 5 (cokemaking)

Table 3-8

Analytes Included Within Analyte Groups

DIOXINS/FURAN ANALYTES	
2,3,7,8-TETRACHLORODIBENZO-P-DIOXIN	1,2,3,7,8-PENTACHLORODIBENZOFURAN
1,2,3,7,8-PENTACHLORODIBENZO-P-DIOXIN	2,3,4,7,8-PENTACHLORODIBENZOFURAN
1,2,3,4,7,8-HEXACHLORODIBENZO-P-DIOXIN	1,2,3,4,7,8-HEXACHLORODIBENZOFURAN
1,2,3,6,7,8-HEXACHLORODIBENZO-P-DIOXIN	1,2,3,6,7,8-HEXACHLORODIBENZOFURAN
1,2,3,7,8,9-HEXACHLORODIBENZO-P-DIOXIN	1,2,3,7,8,9-HEXACHLORODIBENZOFURAN
1,2,3,4,6,7,8-HEPTACHLORODIBENZO-P-DIOXIN	2,3,4,6,7,8-HEXACHLORODIBENZOFURAN
OCTACHLORODIBENZO-P-DIOXIN	1,2,3,4,6,7,8-HEPTACHLORODIBENZOFURAN
2,3,7,8-TETRACHLORODIBENZOFURAN	
METAL ANALYTES	
ALUMINUM	MANGANESE
ANTIMONY	MERCURY
ARSENIC	MOLYBDENUM
BARIUM	NICKEL
BERYLLIUM	SELENIUM
BORON	SILVER
CADMIUM	SODIUM
CALCIUM	THALLIUM
CHROMIUM	TIN
COBALT	TITANIUM
COPPER	VANADIUM
IRON	YTTRIUM
LEAD	ZINC
MAGNESIUM	

Table 3-8 (Continued)

VOLATILE ORGANIC ANALYTES	
ACRYLONITRILE	TRANS-1,4-DICHLORO-2-BUTENE
BENZENE	TRIBROMOMETHANE
BROMODICHLOROMETHANE	TRICHLOROETHENE
BROMOMETHANE	TRICHLOROFLUOROMETHANE
CARBON DISULFIDE	VINYL ACETATE
CHLOROACETONITRILE	VINYL CHLORIDE
CHLOROBENZENE	1,1-DICHLOROETHANE
CHLOROETHANE	1,1-DICHLOROETHENE
CHLOROFORM	1,1,1-TRICHLOROETHANE
CHLOROMETHANE	1,1,1,2-TETRACHLOROETHANE
CIS-1,3-DICHLOROPROPENE	1,1,2-TRICHLOROETHANE
CROTONALDEHYDE	1,1,2,2-TETRACHLOROETHANE
DIBROMOCHLOROMETHANE	1,2-DIBROMOETHANE
DIBROMOMETHANE	1,2-DICHLOROETHANE
DIETHYL ETHER	1,2-DICHLOROPROPANE
ETHYL CYANIDE	1,2,3-TRICHLOROPROPANE
ETHYL METHACRYLATE	1,3-BUTADIENE, 2-CHLORO
ETHYLBENZENE	1,3-DICHLOROPROPANE
IODOMETHANE	1,4-DIOXANE
ISOBUTYL ALCOHOL	2-BUTANONE
M-XYLENE	2-CHLOROETHYLVINYL ETHER
METHYL METHACRYLATE	2-HEXANONE
METHYLENE CHLORIDE	2-PROPANONE
o+p XYLENE	2-PROPEN-1-OL
TETRACHLOROETHENE	2-PROPENAL
TETRACHLOROMETHANE	2-PROPENENITRILE, 2-METHYL-
TOLUENE	3-CHLOROPROPENE
TRANS-1,2-DICHLOROETHENE	4-METHYL-2-PENTANONE
TRANS-1,3-DICHLOROPROPENE	

Table 3-8 (Continued)

SEMIVOLATILE ORGANIC ANALYTES	
ACENAPHTHENE	DY-N-OCTYL PHTHALATE
ACENAPHTHYLENE	DY-N-PROPYLNITROSAMINE
ACETOPHENONE	DIBENZO(A,H)ANTHRACENE
ALPHA-TERPINEOL	DIBENZOFURAN
ANILINE	DIBENZOTHIOPHENE
ANILINE, 2,4,5-TRIMETHYL-	DIETHYL PHTHALATE
ANTHRACENE	DIMETHYL PHTHALATE
ARAMITE	DIMETHYL SULFONE
BENZANTHRONE	DIPHENYL ETHER
BENZENETHIOL	DIPHENYLAMINE
BENZIDINE	DIPHENYLDISULFIDE
BENZO(A)ANTHRACENE	ETHANE, PENTACHLORO-
BENZO(A)PYRENE	ETHYL METHANESULFONATE
BENZO(B)FLUORANTHENE	ETHYLENETHIOUREA
BENZO(GHI)PERYLENE	FLUORANTHENE
BENZO(K)FLUORANTHENE	FLUORENE
BENZOIC ACID	HEXACHLOROBENZENE
BENZONITRILE, 3,5-DIBROMO-4-HYDROXY-	HEXACHLOROBUTADIENE
BENZYL ALCOHOL	HEXACHLOROCYCLOPENTADIENE
BETA-NAPHTHYLAMINE	HEXACHLOROETHANE
BIPHENYL	HEXACHLOROPROPENE
BIPHENYL, 4-NITRO	HEXANOIC ACID
BIS(2-CHLOROETHOXY)METHANE	INDENO(1,2,3-CD)PYRENE
BIS(2-CHLOROETHYL) ETHER	ISOPHORONE
BIS(2-CHLOROISOPROPYL) ETHER	ISOSAFROLE
BIS(2-ETHYLHEXYL) PHTHALATE	LONGIFOLENE
BUTYL BENZYL PHTHALATE	MALACHITE GREEN
CARBAZOLE	MESTRANOL
CHRYSENE	METHAPYRILENE
CROTOXYPHOS	METHYL METHANESULFONATE
DY-N-BUTYL PHTHALATE	N-DECANE

Table 3-8 (Continued)

SEMIVOLATILE ORGANIC ANALYTES (CONTINUED)	
N-DOCOSANE	PENTACHLOROPHENOL
N-DODECANE	PENTAMETHYLBENZENE
N-EICOSANE	PERYLENE
N-HEXACOSANE	PHENACETIN
N-HEXADECANE	PHENANTHRENE
N-NITROSODI-N-BUTYLAMINE	PHENOL
N-NITROSODIETHYLAMINE	PHENOL, 2-METHYL-4,6-DINITRO-
N-NITROSODIMETHYLAMINE	PHENOTHIAZINE
N-NITROSODIPHENYLAMINE	PRONAMIDE
N-NITROSOMETHYLETHYLAMINE	PYRENE
N-NITROSOMETHYLPHENYLAMINE	PYRIDINE
N-NITROSOMORPHOLINE	RESORCINOL
N-NITROSOPIPERIDINE	SAFROLE
N-OCTACOSANE	SQUALENE
N-OCTADECANE	STYRENE
N-TETRACOSANE	THIANAPHTHENE
N-TETRADECANE	THIOACETAMIDE
N-TRIACONTANE	THIOXANTHE-9-ONE
N,N-DIMETHYLFORMAMIDE	TOLUENE, 2,4-DIAMINO-
NAPHTHALENE	TRIPHENYLENE
NITROBENZENE	TRIPROPYLENEGLYCOL METHYL ETHER
o-ANISIDINE	1-BROMO-2-CHLOROBENZENE
o-CRESOL	1-BROMO-3-CHLOROBENZENE
o-TOLUIDINE	1-CHLORO-3-NITROBENZENE
o-TOLUIDINE, 5-CHLORO-	1-METHYLFLUORENE
p-CHLOROANILINE	1-METHYLPHENANTHRENE
p-CRESOL	1-NAPHTHYLAMINE
p-CYMENE	1-PHENYLNAPHTHALENE
p-DIMETHYLAMINOAZOBENZENE	1,2-DIBROMO-3-CHLOROPROPANE
p-NITROANILINE	1,2-DICHLOROBENZENE
PENTACHLOROBENZENE	1,2-DIPHENYLHYDRAZINE

Table 3-8 (Continued)

SEMIVOLATILE ORGANIC ANALYTES (CONTINUED)	
1,2,3-TRICHLOROBENZENE	2,3,6-TRICHLOROPHENOL
1,2,3-TRIMETHOXYBENZENE	2,4-DICHLOROPHENOL
1,2,4-TRICHLOROBENZENE	2,4-DIMETHYLPHENOL
1,2,4,5-TETRACHLOROBENZENE	2,4-DINITROPHENOL
1,2,3,4-DIEPOXYBUTANE	2,4-DINITROTOLUENE
1,3-DICHLORO-2-PROPANOL	2,4,5-TRICHLOROPHENOL
1,3-DICHLOROBENZENE	2,4,6-TRICHLOROPHENOL
1,3,5-TRITHIANE	2,6-DI-TER-BUTYL-P-BENZOQUINONE
1,4-DICHLOROBENZENE	2,6-DICHLORO-4-NITROANILINE
1,4-DINITROBENZENE	2,6-DICHLOROPHENOL
1,4-NAPHTHOQUINONE	2,6-DINITROTOLUENE
1,5-NAPHTHALENEDIAMINE	3-METHYLCHOLANTHRENE
2-(METHYLTHIO)BENZOTHIAZOLE	3-NITROANILINE
2-CHLORONAPHTHALENE	3,3'-DICHLOROBENZIDINE
2-CHLOROPHENOL	3,3'-DIMETHOXYBENZIDINE
2-ISOPROPYLNAPHTALENE	3,6-DIMETHYLPHENANTHRENE
2-METHYLBENZOTHIOAZOLE	4-AMINOBIPHENYL
2-METHYLNAPHTHALENE	4-BROMOPHENYL PHENYL ETHER
2-NITROANILINE	4-CHLORO-2-NITROANILINE
2-NITROPHENOL	4-CHLORO-3-METHYLPHENOL
2-PHENYLNAPHTALENE	4-CHLOROPHENYLPHENYL ETHER
2-PICOLINE	4-NITROPHENOL
2,3-BENZOFLUORENE	4,4'-METHYLENEBIS(2-CHLOROANILINE)
2,3-DICHLOROANILINE	4,5-METHYLENE PHENANTHRENE
2,3-DICHLORONITROBENZENE	5-NITRO-O-TOLUIDINE
2,3,4,6-TETRACHLOROPHENOL	7,12-DIMETHYLBENZ(A)ANTHRACENE

SECTION 4

ANALYTICAL METHODS AND BASELINE VALUES

This section describes the analytical methods associated with the concentration data used to develop the limitations and standards for the iron and steel industry. In today's rule, EPA is regulating only a subset of the pollutants discussed in this section. Depending on the subcategory and whether a facility is a direct or indirect discharger, the regulated pollutants are: ammonia as nitrogen, benzo(a)pyrene, oil and grease as hexane extractable material (HEM), naphthalene, phenols (4AAP), 2,3,7,8-tetrachlorodibenzofuran (TCDF), total cyanide, and total suspended solids (TSS). EPA has included discussion of other pollutants in this section because EPA used the data in its pollutants of concern analyses presented elsewhere in this document.

This section discusses the methods used to analyze the samples that EPA and the industry collected from iron and steel wastewater. Section 3 discusses these sampling efforts. This section also discusses how EPA used the results of its wastewater analyses for purposes of calculating the limitations and standards in today's rule (Section 14 describes the methodology used for those calculations).

Section 4.1 briefly describes baseline values for the pollutants and their importance. Section 4.2 describes the reporting conventions laboratories used in expressing the results of the analysis. Sections 4.3 and 4.4 further explain nominal quantitation limits and baseline values, respectively. Section 4.5 describes the specific analytical methods and the corresponding baseline value for pollutants used in EPA's pollutants of concern analyses and in developing the limitations and standards. Table 4-1 summaries the analytical methods and baseline values discussed in Section 4.5. This table also identifies each pollutant by Chemical Abstract Registry number, indicates whether the samples were collected by EPA or by industry, and lists the nominal quantitation value for the method used. Section 4.6 describes the requirements for laboratory analysis in compliance monitoring for today's regulations.

4.1 Explanation and Importance of Baseline Values

The database that EPA used to calculate the limitations and standards consists of two types of analytical data: 1) data collected and analyzed by EPA ("sampling episodes"), and 2) industry-supplied data ("self-monitoring episodes"). EPA consistently used the same method to analyze all samples for a particular pollutant, as shown in Table 4-1. The methods used for the industry-supplied data varied. Generally, industry used either EPA methods from Methods for Chemical Analysis of Water and Wastes (MCAWW) (Reference 4-1) or the American Public Health Association's Standard Methods for the Examination of Water and Wastewater (References 4-2 and 4-3).

As described further in Section 4.4, in using this database, EPA compared the reported concentrations for each pollutant to a baseline value. EPA used a single baseline value for each pollutant in these comparisons for both EPA sampling episodes and industry self-monitoring episodes. EPA used the nominal quantitation limits associated with the analytical

methods employed in its sampling episodes as the basis for determining each "baseline value." EPA determined that this was appropriate because EPA consistently used a single method for each pollutant while industry used a range of different methods. Consequently, the baseline value for each pollutant generally is the nominal quantitation limit associated with the analytical method EPA used to analyze that pollutant in its sampling episodes.

In general, the term "nominal quantitation limit" describes the smallest quantity of an analyte that can be measured reliably with a particular analytical method. In some cases, however, EPA used a value lower than the nominal quantitation limit as the baseline value because submitted data demonstrated that reliable measurements could be obtained at a lower level. In a few instances, EPA concluded that the nominal quantitation limit for a specified method was less than the level that laboratories could reliably achieve. For those pollutants, EPA modified the nominal quantitation limit upward and used a higher value as the baseline value. Section 4.3 discusses these instances and the nominal quantitation limit for each pollutant further.

4.2 Reporting Conventions Associated with Analytical Results

Most of the analytical data were reported as liquid concentrations in weight/volume units (e.g., micrograms per liter (μg/L)). In a few instances, the results were provided in weight/weight solids units (e.g., milligrams per kilogram (mg/kg)). In those instances, EPA converted the solids results into weight/volume units by using a conversion factor based upon the percent of solids in the sample. In addition, EPA converted data supplied in weight/time units to weight/volume units.[1]

The laboratories expressed the result of the analysis either numerically or as "not quantitated"[2] for a pollutant in a sample. When the result is expressed numerically, then the pollutant was quantitated[3] in the sample. For example, for a hypothetical pollutant X, the result would be reported as "15 μg/L" when the laboratory quantitated the amount of pollutant X in the sample as being 15 μg/L. For the nonquantitated results for each sample, the laboratories reported a "sample-specific quantitation limit."[4] For example, for the hypothetical pollutant X, the result would be reported as "<10 μg/L" when the laboratory could not quantitate the amount of pollutant X in the sample. That is, the analytical result indicated a value less than the sample-specific quantitation limit of 10 μg/L, meaning the actual amount of pollutant X in that sample is

[1]Some facilities reported the results in lbs/day and included the flow rates for each day. EPA used this information to convert the results to mg/L.

[2]Elsewhere in this document and in the preamble to the rule, EPA refers to pollutants as "not detected" or "nondetected." This section uses the term "not quantitated" or "nonquantitated" rather than nondetected.

[3]Elsewhere in this document and in the preamble to the rule, EPA refers to pollutants as "detected." This section uses the term "quantitated" rather than detected.

[4]Elsewhere in this document and in the preamble to the rule, EPA refers to a "sample-specific quantitation limit" as a "sample-specific detection limit" or, more simply, as a "detection limit."

between zero (i.e., the pollutant is not present) and 10 µg/L. The sample-specific quantitation limit for a particular pollutant is generally the smallest quantity in the calibration range that can be measured reliably in any given sample. If a pollutant is reported as not quantitated in a particular wastewater sample, it does not mean that the pollutant is not present in the wastewater, merely that analytical techniques (whether because of instrument limitations, pollutant interactions or other reasons) do not permit its measurement at levels below the sample-specific quantitation limit.

In its calculations, EPA generally substituted the value of the reported sample-specific quantitation limit for each nonquantitated result. In a few cases when the sample-specific quantitation limit was less than the baseline value, EPA substituted the baseline value for the nonquantitated result. In a few instances when the quantitated value was below the baseline value, EPA considered these values to be nonquantitated in the statistical analyses and substituted the baseline value for the measured value. Section 4.3 further discusses these cases.

4.3 Nominal Quantitation Limits

Protocols used for determining nominal quantitation limits in a particular method depend on the definitions and conventions that EPA used at the time the method was developed. As stated previously, the nominal quantitation limit is the smallest quantity of an analyte that can be reliably measured with a particular method. The nominal quantitation limits associated with the EPA methods addressed in the following sections fall into three general categories. The first category includes Methods 1613B, 1625, and 1664, which use the minimum level (ML) definition as the lowest level at which the entire analytical system must give a recognizable signal and an acceptable calibration point for the analyte. The second category pertains specifically to Method 1620, and is explained in detail in Section 4.5.2. The third category pertains to the remainder of the methods, in which a variety of terms are used to describe the lowest level at which measurement results are quantitated. These include the classical wet chemistry methods and several EPA methods for the determination of metals and organics. In some cases (especially with the classical wet chemistry analytes), the methods are older (1970s and 1980s) and different concepts of quantitation apply. These methods typically list a measurement range or lower limit of measurement. The terms differ by method and, as discussed in subsequent sections, the levels presented do not always represent the lowest levels laboratories can currently achieve. For those methods associated with a calibration procedure, the laboratories demonstrated through a low point calibration standard that they were capable of reliable quantitation at method-specified (or lower) levels. In such cases, these nominal quantitation limits are operationally equivalent to the ML (though not specifically identified as such in the methods). In the case of titrimetric or gravimetric methods, the laboratory adhered to the established lower limit of the measurement range published in the methods. Section 4.5 presents details of the specific methods.

4.4 Comparisons to Baseline Values

EPA performed two types of comparisons of the concentration data to the baseline values. For the proposal, EPA performed a third type of comparison in which the metals (i.e.,

those measured by EPA Method 1620) and TSS baseline values were compared to the option long-term averages used to calculate the limitations and standards. However, for today's rule, EPA has not provided any limitations and standards for any metal and the TSS levels were high enough that it was not necessary to perform the comparison. Thus, only the two types of comparisons involving baseline values for today's rule are described below.

4.4.1 Individual Data Values

When the baseline value was based upon method-defined minimum levels of Methods 1613B, 1625, or 1664 (see Section 4.5.1), EPA compared the individual concentration values to the baseline values. For these methods, the baseline values are based upon MLs that were developed through interlaboratory studies to determine the lowest measurable level (Section 4.5.1 provides a more precise definition).

Before using the data measured by these methods, EPA compared each analytical result (i.e., quantitated value or sample-specific quantitation limit for a non-quantitated value) to the baseline value for the pollutant. The objective of this comparison was to identify any results reported below the method-defined ML of quantitation. Results reported below the method-defined ML were changed to the ML to ensure that all results used by EPA were quantitatively reliable. In addition, any quantitated value changed to the ML was also considered to be nonquantitated[5] in calculating the limitations and standards and in EPA's pollutants of concern analyses. In most cases, the quantitated values and sample-specific quantitation limits were equal to or greater than the baseline values. If EPA had data from multiple methods for a particular analyte (e.g., naphthalene) and one of those methods (e.g., 1625) had an ML, then EPA performed this comparison for all of the data for that analyte.

An example of this comparison: Suppose a facility's dataset had five values for HEM, of which two were nonquantitated with sample-specific quantitation limits of 2 mg/L and 6 mg/L and the remaining three values were quantitated at 4 mg/L, 25 mg/L, and 50 mg/L. In the comparison, EPA compared the baseline value of 5 mg/L for HEM to all five values of HEM in the facility's dataset. Because the sample-specific quantitation limit of 2 mg/L is less than 5 mg/L, EPA changed this sample-specific quantitation limit to 5 mg/L and considered the value to be a sample-specific quantitation limit (i.e., nonquantitated) rather than a quantitated value. Likewise, EPA changed the quantitated value of 4 mg/L to 5 mg/L. The remaining sample-specific quantitation limit of 6 mg/L and the two quantitated values of 25 mg/L and 50 mg/L remained the same because they were greater than the baseline value of 5 mg/L.

4.4.2 Assessment of Treatability of Influent

As explained in Section 14, in the "LTA test," EPA compared a multiple of the baseline value to influent concentrations to determine if the influent concentrations were at treatable levels for all pollutants. If the influent concentrations were determined to be below treatable levels, then the corresponding effluent data were excluded from the analyses.

---

[5]As explained in Appendix E, EPA applied different statistical assumptions to quantitated and nonquantitated results.

4.5 Analytical Methods

In developing the limitations and standards and in its pollutants of concern analyses, EPA generally used only data from analytical methods approved for compliance monitoring or those that EPA has used for decades in support of effluent limitations guidelines and standards development. (The remainder of this section refers to such methods as 'NPDES-approved'[6] or 'nonapproved.') Unless otherwise stated, Standard Methods references are based on the 18th edition, which is the edition currently approved for NPDES monitoring. Table 4-1 summarizes the analytical methods, the associated pollutants measured by the method, the nominal quantitation levels, and the baseline levels. The following subsections provide additional information supporting Table 4-1 which is located at the end of Section 4. (The subsections are listed in order by method number, except for Method 420 which is in Section 4.5.16.)

4.5.1 Methods 1613B, 1625, 1664 (2,3,7,8-TCDF, Benzo(a)pyrene, Naphthalene, Phenol, HEM)

As stated earlier, Method 1613B for dioxins, Method 1625 for semivolatile organic compounds, and Method 1664 for HEM[7] and silica gel treated n-hexane extractable material (SGT-HEM)[8] use the ML concept for quantitation of the pollutants measured by the methods. The ML is defined as the lowest level at which the entire analytical system must give a recognizable signal and an acceptable calibration point for the analyte. When an ML is published in a method, the Agency has demonstrated that at least one well-operated laboratory can achieve the ML, and when that laboratory or another laboratory uses that method, the laboratory is required to demonstrate, through calibration of the instrument or analytical system, that it can make measurements at the ML.

For these three NPDES-approved analytical methods, if a quantitated value or sample-specific quantitation limit was reported with a value less than the ML specified in a method, EPA substituted the value of the ML and assumed that the measurement was nonquantitated. For example, if the ML was 10 μg/L and the laboratory reported a quantitated value of 5 μg/L, EPA assumed that the concentration was nonquantitated with a sample-specific quantitation limit of 10 μg/L.

Of the analytes measured by these methods, today's rule includes limitations and standards for 2,3,7,8-TCDF (Method 1613B); benzo(a)pyrene and naphthalene (Method 1625); and HEM (Method 1664). None of the reported values from these methods were less than the ML; therefore, no substitutions were made to data from EPA's sampling episodes. However, in

[6]NPDES is the acronym for the National Pollutant Discharge Elimination System.

[7]As explained in Section 14.1, EPA excluded oil and grease data determined by analytical methods that required freon, an ozone depleting agent. Thus, this section does not describe those analytical methods.

[8]SGT-HEM measures nonpolar material (i.e., n-hexane extractable material that is not absorbed by silica gel). Method 1664 measures both oil and grease and nonpolar material.

calculating the limitations and standards for naphthalene, EPA also included data generated from Method 625 (see Section 4.5.14).

4.5.2 Method 1620 and 200.7 (Metals)

Method 1620 for metals determination uses the concept of an instrument detection limit (IDL), which is defined as "the smallest signal above background noise that an instrument can detect reliably."[9] EPA used Method 1620 to determine metals in the samples collected during its sampling episodes. While Method 1620 is not an NPDES-approved method, it represents a consolidation of several NPDES-approved methods including Method 200.7 (inductively coupled plasma atomic emission (ICP) spectroscopy for trace elements) and Method 245.1 (mercury by cold vapor atomic absorption technique). Some industry-supplied results for chromium, lead, nickel, and zinc were determined by Method 200.7. Other industry-supplied results for metals were determined by Methods 239.2, 245.1, 3120B, and 3130B, as discussed in Sections 4.5.5 through 4.5.8.

Data reporting practices for Method 1620 analysis follow conventional metals reporting practices used in other EPA programs, in which values are required to be reported at or above the IDL. In applying Method 1620, each analytical laboratory participating in EPA's data gathering efforts determines IDLs on a quarterly basis. The IDL is, therefore, laboratory-specific and time-specific. Although Method 1620 contains MLs, these MLs predate EPA's recent refinement of the ML concept described in Section 4.3. The ML values associated with Method 1620 are based on a consensus reached by EPA and laboratories during the 1980s regarding levels that could be considered reliable quantitation limits when using Method 1620. These limits do not reflect advances in technology and instrumentation since the 1980s. Consequently, EPA used the IDLs as the lowest values for reporting purposes, with the general understanding that reliable results can be produced at or above the IDL.

The Agency used the Method 1620 ML values as the baseline values for the metal analytes, with the exception of lead. In Method 1620, lead has an ML of 5 μg/L for graphite furnace atomic absorption (GFAA) spectroscopy analysis; EPA determined, however, that it was not necessary to measure down to such low levels, and that lead could instead be analyzed by inductively coupled plasma atomic emission (ICP) spectroscopy. Consequently, for the purposes of EAD's data gathering efforts, the required ML (and baseline value) for lead was adjusted to 50 μg/L. EPA used the laboratory-reported quantitated values and sample-specific quantitation limits, which captured concentrations down to the IDLs, in calculating the long-term averages for the pollutants of concern analyses.

4.5.3 Method 160.2, 209C, and 2540D (Total Suspended Solids)

Total suspended solids (TSS) was determined by Method 160.2 for samples collected by EPA and some samples collected by the industry. Industry also used Method 209C

[9]Keith, L.H., W. Crummett, J. Deegan, R.A. Libby, J.K. Taylor, G. Wentler. "Principles of Environmental Analysis," Analytical Chemistry, Volume 55, 1983, Page 2217.

and 2540D to measure TSS. Methods 160.2 and 2540D are NPDES-approved and are essentially identical methods. While it is not currently NPDES-approved, Method 209C for TSS appears in the 15th and 16th editions of Standard Methods and was approved in the CFR in 1986. Since then, the method numbers have been updated in more recent editions of Standard Methods and in the CFR, but the analytical procedures in Method 209C are identical to those of Method 2540D. Therefore, EPA determined that the data from all three methods should produce similar results and thus are usable for the purposes of rulemaking development.

Because EPA used Method 160.2 for its sampling episodes, the Agency selected the nominal quantitation limit of 4 mg/L from Method 160.2 as the baseline value. In calculating the limitations and standards, EPA used the laboratory-reported quantitated values and sample-specific quantitation limits. For the proposal, if the option long-term average for TSS was less than the baseline value, EPA substituted the baseline value for the long-term average. In today's rule, the option long-term averages were at or above the baseline value and thus no substitutions were required.

4.5.4 Method 218.4 (Hexavalent Chromium)

For EPA sampling episodes, hexavalent chromium was determined by Method 218.4, an NPDES-approved procedure that utilizes atomic absorption for the determination of hexavalent chromium after chelation and extraction. In developing the option long-term averages for the pollutants of concern analyses, EPA included industry-supplied data for which industry did not cite the analytical methods used. Industry also supplied data determined by Method 3120B. Because of concerns about the use of this method (see Section 4.5.7), EPA excluded these data from the calculation of the option long-term averages for the pollutants of concern analyses.

In Method 218.4, the nominal quantitation limit or lower limit of the measurement range is 0.01 mg/L. Because EPA used this method, this nominal quantitation limit was used as the baseline value for all hexavalent chromium results.

4.5.5 Method 239.2 (Lead)

In its pollutants of concern analyses for lead, EPA included industry-supplied data from Method 239.2. This NPDES-approved method utilizes atomic absorption as the determinative technique to measure lead. Its nominal quantitation limit of 0.005 mg/L is expressed in the method as the lower limit of the measurement range.[10] For the pollutants of concern analyses, EPA used the baseline value of 0.05 mg/L from Method 1620 (see Section 4.5.2).

[10]This method refers to the lower value of the "optimum concentration range."

4.5.6 Method 245.1 (Mercury)

In developing the option long-term averages for the pollutants of concern analyses for mercury, EPA included industry-supplied data from Method 245.1. This NPDES-approved method utilizes cold vapor atomic absorption as the determinative technique to measure mercury. Its nominal quantitation limit of 0.0002 mg/L is expressed in the method as the lower limit of the measurement range.[11] The industry-supplied mercury data included results lower than the baseline value (see Section 4.5.2). EPA used these data as reported in its pollutants of concern analyses.

4.5.7 Method 3120B (Chromium and Hexavalent Chromium)

Industry-supplied results for chromium and hexavalent chromium were determined by Method 3120B, an inductively coupled plasma (ICP) method. Its nominal quantitation limit of 0.01 mg/L is cited in the method as the lower limit of the measurement range.

Method 3120B is NPDES-approved for chromium determination, and EPA included these data in calculating the chromium option long-term averages for the pollutants of concern analyses. None of the chromium data from Method 3120B had quantitated values or sample-specific quantitation limits lower than the baseline value of 0.01 mg/L from Method 1620 (see Section 4.5.2).

Because of EPA's concerns about the quality of the hexavalent chromium measurements from Method 3120B, EPA excluded these measurements from its pollutants of concern analyses. Method 3120B is used for determination of total metals (including chromium), but is not typically used for hexavalent chromium determination. It is technically possible to analyze for hexavalent chromium by this method if, during sample preparation, the hexavalent chromium is separated from other forms of chromium (i.e., Cr^{+3}). After proposal, EPA contacted the facility to determine if the appropriate procedures were followed in determining hexavalent chromium concentrations, and to determine if all quality assurance/quality control (QA/QC) criteria were met, but this information was not made available to EPA.

4.5.8 Method 3130B (Lead, Zinc)

Method 3130B was used to determine lead and zinc in some industry-supplied data. Method 3130B is an anodic stripping voltammetry (ASV) method that does not require sample digestion. EPA excluded these data in its pollutants of concern analyses because the associated laboratory reports and QA/QC data were not provided to EPA. This information was necessary to determine whether samples were acid digested to ensure that lead and zinc complexes were broken down to a detectable form and to reduce analytical interferences. Also, it was not possible to determine whether the results were associated with acceptable laboratory and matrix QA/QC. Furthermore, as there are no NPDES-approved ASV methods for the

[11]This method calls it a detection limit.

determination of lead or zinc in wastewater, EPA required additional information to assess whether application of the ASV method to wastewater effluents analyzed was appropriate (i.e., not subject to substantial interferences).

4.5.9 Method 335.2 (Total Cyanide)

EPA and industry determined total cyanide using Method 335.2, an NPDES-approved method. Method 335.2 uses either titrimetric or colorimetric procedures to measure total cyanide. In addition to these data, EPA used data from one facility that used Methods 335.3 and 335.4. Method 335.2 is manual; Method 335.3 is automated; and Method 335.4 uses different digestion. However, all three versions are similar and provide comparable results.

The nominal quantitation limit for Method 335.2 is expressed in the method as the lower limit of the measurement range.[12] Because EPA used Method 335.2, the Agency used its nominal quantitation limit of 0.02 mg/L as the baseline value for all total cyanide results. Although some laboratories have demonstrated that they can quantitate to lower levels, none of the total cyanide data determined from Method 335.2 had quantitated values or sample-specific quantitation limits lower than the baseline value.

For total cyanide, industry also used the NPDES-approved 4500-CN procedures for sample analysis. In the listings of data for the proposal, EPA has identified this procedure with three different references provided by industry: 4500-CNC; 4500 CN E; and 4500-CNE. Method 4500-CNC refers to the distillation process used to prepare samples for analysis, and Methods 4500 CN E and 4500-CNE refer to the colorimetric method of total cyanide determination. EPA compared the data determined from these analyses to the baseline value of 0.02 mg/L associated with the nominal quantitation limit from Method 335.2. These values were used as reported in calculating the limitations and standards.

4.5.10 Method 340.2 (Fluoride)

For samples collected by EPA, fluoride was determined by Method 340.2, an NPDES-approved potentiometric method that uses a fluoride electrode. Industry did not supply any additional data for this analyte. The nominal quantitation limit of 0.1 mg/L for Method 340.2 is expressed in the method as the lower limit of the measurement range.[13] This nominal quantitation limit was used as the baseline value for fluoride.

---

[12]The method states that it is "sensitive to about 0.02 mg/L for the colorimetric procedure; the titrimetric procedure is used for measuring concentrations above 1 mg/L;" hence, these values represent the lower limit of the measurement range.

[13]The method states that "Concentrations from 0.1... may be measured."

4.5.11 Methods 350.2, 417/350.2, and 4500-NH_3 (Ammonia as Nitrogen)

For EPA's sampling episodes, ammonia as nitrogen was determined by Method 350.2, an NPDES-approved method. Industry also supplied data determined by Methods 417/350.2 and 4500-NH_3.

Method 350.2 uses either colorimetric, titrimetric, or electrode procedures to measure ammonia. This method has a lower measurement range limit of 0.05 mg/L for the colorimetric and electrode procedures, and a lower measurement range limit of 1.0 mg/L for the titrimetric procedure. Rather than use different baseline values, EPA used 0.05 mg/L because it represented a value at which ammonia as N can be reliably measured by several determinative techniques in Method 350.2, as well as in other NPDES-approved methods.

One facility supplied concentration data and reported the method as '417/350.2.' Based on additional information received from the facility, the method utilized is equivalent to NPDES-approved Method 350.2; therefore, EPA included these data in its analyses.

Some facilities used the 4500-NH_3 procedure. In the listings of data, EPA has identified this procedure in four different ways: 4500-NH_3; 4500NH, BE; 4500NH_3-E; and 4500-NH_3F. With the exception of Method 4500-NH_3, which is a general method citation applicable to a group of specific methods, all these citations refer to NPDES-approved procedures for ammonia as nitrogen. 4500-NH_3-B refers to the primary distillation step performed prior to analysis. 4500-NH_3-E refers to the ammonia-selective electrode determinative technique, and 4500-NH_3-F refers to the spectrophotometric determination of ammonia by reaction with phenate.

EPA used the nominal quantitation limit of 0.05 mg/L derived from Method 350.2 as the baseline because this is the method associated with EPA's sampling episodes.

4.5.12 Methods 353.1, 353.2, and 353.3 (Nitrate/Nitrite)

Nitrate/nitrite can be determined by three NPDES-approved methods, each of which lists slightly different nominal quantitation limits that are expressed in the methods as the lower limit of the measurement range. Methods 353.1 and 353.2 are automated colorimetric procedures with quantitation limits of 0.01 and 0.05 mg/L, respectively. Method 353.3 is a cadmium reduction, spectrophotometric procedure with a nominal quantitation limit of 0.01 mg/L. In the pollutant of concern analyses, EPA established the baseline value as the Method 353.1 quantitation limit of 0.01 mg/L.

4.5.13 Methods 4500-CN M and D4374-98 (Thiocyanate)

EPA and industry used the 4500-CN M procedure in determining the concentrations of thiocyanate. In the listings of the data, EPA has identified this method in three ways: 4500-CN; 4500-CN M.; and 4500CN-M. EPA has confirmed that the associated data were all generated by Method 4500-CN M. The nominal quantitation limit for Method 4500-CN

M is cited in the method as the lower limit of the measurement range.[14] Because EPA used Method 4500-CN M, the Agency used its nominal quantitation limit of 0.1 mg/L as the baseline value for all thiocyanate results. None of the thiocyanate data had quantitated values or sample-specific quantitation limits lower than this baseline value.

Because there is no NPDES-approved method for thiocyanate, EPA proposed two consensus standards, Method 4500-CN M (Reference 4-3) and D4374-98 (Annual Book of ASTM Standards, Volume 11.02, 1999). Because EPA has not established any limitations for thiocyanate in today's rule, the D4374-98 consensus standard is not included in today's rule.

4.5.14 Methods 625 and 610 (Naphthalene)

In developing the limitations and standards for naphthalene, EPA included industry-supplied data from Method 625, an NPDES-approved GC/MS method for semivolatile organics. This method's nominal quantitation limit is expressed as the lower limit of the measurement range, typically the concentration of the lowest calibration standard. EPA selected 0.01 mg/L as the baseline value based on the ML for Method 1625 (see Section 4.5.1).

The industry-supplied naphthalene data from Method 1625 included quantitated values or sample-specific quantitation limits lower than the baseline value in developing the limitations and standards. EPA replaced these data with the value of the baseline value and assumed that the measurements were nonquantitated.

While none of today's data were determined by Method 610, it is an NPDES-approved method for naphthalene that is less susceptible to phenol interferences. In measuring for compliance with today's limitations and standards for naphthalene, if a facility has a problem with phenol in their wastewater, the laboratory can use the HPLC procedure in Method 610 to achieve the required sensitivity. Also, see Section 4.6.

4.5.15 Method 8270 (Benzo(a)pyrene)

Industry supplied benzo(a)pyrene data generated from Method 8270. Although Method 8270 is not NPDES-approved, EPA recognizes that a number of similarities exist between Method 8270 and NPDES-approved methods. The estimated quantitation limit of 10 μg/L for benzo(a)pyrene in Method 8270 is the same as Method 1625's ML which was used as the baseline value for this analyte. This is consistent with Method 625, which has an ML of 10 μg/L for benzo(a)pyrene. Many of the QC checks and procedures of Method 8270 are analogous to procedures utilized by NPDES-approved methods, Method 625 in particular. However, one major drawback for Method 8270 is that it only requires a subset of target analytes to be evaluated in the matrix spike, while Method 625 requires a full target analyte matrix spike. Furthermore, the calibration requirement in Method 8270 could be interpreted to mean that the calibration standard should be at or below the known or anticipated regulatory compliance level.

[14]The method lists this value as the lower limit under "application" in natural waters or wastewaters.

Because of these concerns, EPA contacted the facility for more information about its laboratory analyses. As explained in the proposal technical development document, EPA could only reconsider its decision to exclude these data pending a full review of the laboratory reports, including initial precision and recovery (IPR) analyses, instrument tunes, calibrations, blanks, laboratory control sample (LCS) analyses, matrix spikes, surrogates, and all sample data. However, this information was not provided to EPA. Because EPA has concerns about the quality of the benzo(a)pyrene data generated by Method 8270, EPA excluded them from developing the limitations and standards.

4.5.16 Methods 420.1 and 420.2 (Phenols (4AAP))

In EPA's database, the terms "total phenols" and "total recoverable phenolics" are used synonymously. The term "total recoverable phenolics" is used in the titles of EPA Methods 420.1 to 420.4. While "total recoverable phenolics" could be considered a more accurate term for what is measured in any of these related methods, both terms refer to an aggregate measure of compounds with a phenol-like or "phenolic" structure. The use of the adjective "recoverable" simply recognizes that there are some compounds that are not measured, as well as other related compounds in this class. Thus, the method reports what can be recovered from the sample under the conditions of the analysis. EPA uses the term phenols (4AAP) in today's rule.

The methods for the analysis of phenols (4AAP) employ the reagent 4-aminoantipyrine (4AAP), which reacts with phenolic compounds to produce a dark red product, an antipyrine dye. The concentration of the phenolic compounds is determined by measuring the absorbance of the sample at a wavelength of 460 to 520 nm, depending on the method. The methods are calibrated using a series of standards containing the single compound phenol. EPA Methods 420.1 and 420.2, the two NPDES-approved methods, provide several options for sample preparation and analysis, including a preliminary distillation designed to remove interferences and a chloroform extraction procedure in Method 420.1 that is designed to improve the sensitivity of the method. Both methods also provide information on the concentrations of the calibration standards that may be prepared for a given set of procedural options.

Each of these methods contains at least one set of options that will provide sufficient sensitivity to meet the effluent guideline limitation for phenols (4AAP). Therefore, as with any other compliance monitoring analysis, the permitted discharger is responsible for communicating the requirements of the analysis to the laboratory, including the sensitivity required to meet the regulatory limits associated with each analyte of interest. In turn, the laboratory is responsible for employing the appropriate set of method options and a calibration range in which the concentration of the lowest non-zero standard represents a sample concentration lower than the regulatory limit for each analyte.

The methods themselves do not contain a required calibration range. Each laboratory can, and does, establish a calibration range based on its use of the method. EPA used a baseline value of 0.05 mg/L because this was the most commonly reported sample-specific

detection limit[15] in EPA's sampling episode data. (These data included more concentrated samples than effluent.)

4.6 Requirements for Laboratory Analysis for Compliance Monitoring

The permittee is responsible for communicating the requirements of the analysis to the laboratory, including the sensitivity necessary to meet the regulatory limits associated with each analyte of interest. In turn, the laboratory is responsible for employing the appropriate set of method options and a calibration range in which the concentration of the lowest non-zero standard represents a sample concentration lower than the regulatory limit for each analyte. For example, EPA Methods 420.1 and 420.2 provide several options for sample preparation and analysis, including a preliminary distillation designed to remove interferences and a chloroform extraction procedure (Method 420.1) designed to improve the sensitivity of the method. Both methods also provide information on the concentrations of the calibration standards that may be prepared for a given set of procedural options. Each of these methods contains at least one set of options that will provide sufficient sensitivity to meet the effluent guideline limitations for phenols (4AAP). Thus, it is the responsibility of the permittee to convey to the laboratory the required sensitivity to comply with the limitations. See Sierra Club v. Union Oil, 813 F.2d 1480, 1492 (9th Cir. 1987).

For organic compounds, such as 2,3,7,8-TCDF, naphthalene, and benzo(a)pyrene, it may be necessary for laboratories to overcome interferences using procedures such as those suggested in *Guidance on the Evaluation, Resolution, and Documentation of Analytical Problems Associated with Compliance Monitoring* (EPA 821-B-93-001). The Monitoring Guidance was developed in response to matrix interference problems encountered primarily in development of the final rule for the Organic Chemicals, Plastics and Synthetic Fibers (OCPSF) category promulgated at 40 CFR Part 414. EPA consulted several laboratories that used different strategies to analyze wastewaters (in-process, treated, untreated) from the OCPSF industry and other industries. Wastewaters in the OCPSF industry presented a considerably greater challenge than those in the iron and steel industry because of high loadings of inorganic substances, suspended solids, and especially of organic compounds including monomers, polymeric materials, intermediate chemicals, and manufactured products. As a result of the consultation with the laboratories testing these more complex matrices, EPA found that nearly all matrix interference problems could be eliminated. Therefore, EPA believes that laboratories and iron and steel mills following the Monitoring Guidance should be able to eliminate any residual matrix interference problems.

4.7 References

4-1 U.S. Environmental Protection Agency. Methods for Chemical Analysis of Water and Wastes. EPA 821-C-99-004. Washington, DC, June 1999.

[15]For more than one hundred samples, the laboratories reported a lower sample-specific detection limit of 0.005 mg/L using Method 420.1.

4-2 American Public Health Association, American Water Works Association, and Water Environment Federation. Standard Methods for the Examination by Water and Wastewater, 18th Edition. Washington, DC, 1992.

4-3 American Public Health Association, American Water Works Association, and Water Environment Federation. Standard Methods for the Examination by Water and Wastewater, 20th Edition. Washington, DC, 1998.

Table 4-1

Analytical Methods and Baseline Values

Analyte	Chemical Abstract Service (CAS) Number	Baseline Value (mg/L)	Samples Collected and Analyzed by	Method Used to Analyze Samples	Nominal Quantitation Value (mg/L) for Method
Ammonia as Nitrogen	7664-41-7	0.05	EPA, Industry	350.2	0.05
			Industry	417/350.2	0.05
				4500-NH_3	0.1(a)
				4500-NH_3F	0.1
				4500NH, BE	0.8
				4500NH_3-E	0.8
Fluoride	16984-48-8	0.1	EPA	340.2	0.1
Hexane Extractable Material (HEM)	C036	5	EPA	1664	5
Silica Gel Treated Hexane Extractable Material (SGT-HEM) (b)	C037	5	EPA	1664	5
Nitrate/Nitrite	C005	0.01	(c)	353.1	0.01
Thiocyanate	302-04-5	0.1	EPA	4500-CN	0.1
			EPA	4500-CN M	0.1
			Industry	4500CN-M	0.1
			Proposed	D4374-98	0.0001
Total Cyanide	57-12-5	0.02	EPA, Industry	335.2	0.02
			Industry	4500 CN E	0.005
				4500-CNC	0.005(d)
				4500-CNE	0.005
Total Suspended Solids (TSS)	C009	4	EPA, Industry	160.2	4
			Industry	160.2	4
				209C	4
				2540 D	4
Chromium	7440-47-3	0.01	EPA	1620	0.01
			Industry	200.7	0.01
				3120B	0.01
Hexavalent Chromium	18540-29-9	0.01	EPA, Industry	218.4	0.01
			Industry	3120B	NA

Table 4-1 (continued)

Analyte	Chemical Abstract Service (CAS) Number	Baseline Value (mg/L)	Samples Collected and Analyzed by	Method Used to Analyze Samples	Nominal Quantitation Value (mg/L) for Method
Lead	7439-92-1	0.05	EPA	1620	0.05
			Industry	200.7	0.05
				239.2	0.005
				3130B	NA
Mercury	7439-97-6	0.0002	EPA	1620	0.0002
			Industry	245.1	0.0002
Nickel	7440-02-0	0.04	EPA	1620	0.04
			Industry	200.7	0.04
Selenium	7782-49-2	0.005	EPA	1620	0.005
Zinc	7440-66-6	0.02	EPA	1620	0.02
			Industry	200.7	0.02
				3130B	NA
Benzo(a)pyrene	50-32-8	0.01	EPA	1625	0.01
			Industry	8270	0.01
Naphthalene	91-20-3	0.01	EPA	1625	0.01
			Industry	625	0.01
Phenols (4AAP)	C020	0.05	EPA, Industry	420.1	(c)
				420.2	(c)
2,3,7,8-Tetrachlorodibenzofuran (TCDF)	51207-31-9	10 pg/L	EPA	1613B	10 pg/L

(a) For some of the industry-submitted data, "4500-NH_3" was cited as the method used. This reference is vague in that it potentially refers to seven different procedures. Consequently, EPA has listed the lowest of the measurement ranges cited in the methods.
(b) SGT-HEM measures nonpolar material (i.e., n-hexane extractable material that is not absorbed by silica gel), the portion of oil and grease that is similar to total petroleum hydrocarbons (TPH).
(c) The method does not have a required calibration range. The baseline value is based upon the most frequently reported sample-specific detection limit.
(d) Method 4500-CN-C is the distillation process by which to prepare samples for analysis by either 4500-CN-D or -E. Because EPA does not have complete information on which determinative technique industry used, the quantitation limit reflected in the citation for 4500-CN-C is the lower quantitation limit of the two procedures.
NA - Not available.

SECTION 5

DESCRIPTION OF THE INDUSTRY

This section describes the iron and steel industry in the United States. Unless otherwise noted, all estimates included in this section represent 1997 data collected in the U.S. EPA Collection of 1997 Iron and Steel Industry Data (EPA survey). EPA recognizes that the estimates provided in this section do not necessarily reflect the current status of the iron and steel industry in the United States; however, EPA does not have a more recent comprehensive set of data to use to describe the industry.

The United States is the third largest steel producer in the world, accounting for 12 percent of the international steel market. The iron and steel industry in the United States has an annual steel output of approximately 117 million tons per year, and employs nearly 145,000 people (Reference 5-1). Based on estimates from the EPA survey, there are approximately 254 iron and steel sites in the United States; the 254 sites are owned by 115 companies. The types of sites and the manufacturing operations conducted at these sites are described below.

5.1 Types of Sites

EPA classified manufacturing facilities in the iron and steel industry into the following three types on the basis of raw material consumption and manufacturing processes: integrated steel mills, non-integrated steel mills, and stand-alone facilities. This section provides a general description of the types of sites, these processes conducted, the number of facilities and locations, the types of steel processed, and the wastewater discharge practices for each type of site. Figure 5-1 is a schematic drawing of the steelmaking, refining, and casting operations that occur at iron and steel facilities. Figure 5-2 shows the various hot forming and finishing operations that steel may undergo to form semi-finished or finished products.

Integrated steel mills produce molten iron in blast furnaces using coke, limestone, beneficiated iron ore, and preheated air as the principal raw materials. Other raw materials used to produce molten iron may include sinter, other iron-bearing materials, oxygen, and alternate sources of carbon. These mills then charge the molten iron (or hot metal) and steel scrap to basic oxygen furnaces (BOFs) to produce molten steel. Depending on final product specifications, the molten steel then undergoes various refining steps prior to casting, hot forming, and finishing operations. Several integrated mills also have cokemaking and sintering plants that produce raw materials for blast furnace operations.

Non-integrated steel mills produce molten steel by melting steel scrap in electric arc furnaces (EAFs). Some non-integrated steel mills also use high-quality iron materials such as pig iron or direct-reduced iron along with scrap. As at integrated mills, the molten steel undergoes various refining, casting, hot forming, and finishing operations.

Stand-alone facilities do not produce molten steel and include certain raw material preparation facilities and steel forming and finishing mills. A number of stand-alone operations produce raw materials for ironmaking and steelmaking (e.g., by-product recovery and non-recovery coke plants, sinter plants, and direct-reduced ironmaking plants). Steel forming and finishing stand-alone mills conduct many of the same hot forming and steel finishing operations conducted at integrated and non-integrated steel mills. The major types of stand-alone facilities are described below:

- Coke plants and sinter plants manufacture feed materials for blast furnaces.

- Direct-reduced ironmaking plants manufacture feed materials for EAFs.

- Hot forming mills receive cast products from integrated and non-integrated steel mills. These facilities perform hot forming operations and, depending on the product, a limited number may perform steel finishing operations.

- Carbon steel finishing mills may perform acid pickling, cold forming and annealing, acid and alkaline cleaning, electroplating, and hot coating on carbon steel products received from other mills. Stand-alone stainless steel finishing mills typically perform acid pickling and descaling and cold forming and annealing operations on stainless steel products received from other mills.

- Pipe and tube mills include:

  — Facilities that manufacture butt-welded or seamless pipe and tube through hot forming operations,

  — Facilities that manufacture pipe and tube using cold forming operations, such as electric resistance welding, and

  — Facilities that receive pipe and tube and perform other operations, such as drawing.

  Only the stand-alone pipe and tube mills that manufacture butt-welded or seamless pipe and tube through hot forming operations, as opposed to those that perform cold forming and drawing operations on pipe and tube , were evaluated as part of the iron and steel industry for the purpose of developing effluent limitations and guidelines. Section 1 provides more detail on the applicability of the iron and steel category.

Table 5-1 presents EPA's national estimates of the numbers of iron and steel sites by type in the United States. There are 20 integrated steel mills that account for approximately 60 percent of domestic annual raw steel production. Approximately 94 non-integrated steel mills account for the remaining 40 percent of domestic annual raw steel production. There are approximately 138 stand-alone facilities. Non-integrated steel mills are the largest group and they outnumber integrated steel mills by more than four to one. Stand-alone finishing facilities form the second largest group, and stand-alone hot forming facilities form the third largest group. This reflects two trends in the industry over the past 25 years: (1) a shift of steel production from older, larger integrated steel mills to newer, smaller non-integrated steel mills, and (2) the emergence of specialized, stand-alone finishing facilities that process semi-finished sheet, strip, bars, and rods obtained from integrated or non-integrated facilities.

Integrated steel mills are located primarily east of the Mississippi River in Illinois, Indiana, Michigan, Ohio, Pennsylvania, West Virginia, Maryland, Kentucky, and Alabama; one integrated steel mill is located in Utah. Figure 5-3 shows the locations of integrated steel mills. Stand-alone coke plants and coke plants at integrated steel mills are located in Illinois, Indiana, Michigan, Ohio, New York, Pennsylvania, Virginia, Kentucky, Alabama, and Utah. Figure 5-4 shows the locations of stand-alone and colocated coke facilities. Non-integrated steel mills are located throughout the continental United States, as are stand-alone hot forming and finishing mills.

Steel produced at integrated and non-integrated steel mills can be classified as carbon steels, alloy steels, and stainless steels. Carbon steels owe their properties to varying concentrations of carbon, with relatively low concentrations of alloying elements (less than 1.65 percent manganese, 0.60 percent silicon, and 0.60 percent copper). Alloy steels contain concentrations of manganese, silicon, or copper greater than those for carbon steels, or other specified alloying elements added to impart unique properties to the steel. Stainless steels are corrosion resistant and heat resistant; the principal alloying elements for stainless steel are chromium, nickel, and silicon. Steel is typically considered stainless steel when the chromium content is 10 percent or greater.

Table 5-2 lists the types of steels manufactured or processed at integrated and non-integrated steel mills and stand-alone hot forming, finishing, and pipe and tube. All integrated steel mills produce carbon steels; some also produce alloy and stainless steels. EPA estimates that 72 non-integrated steel mills, 26 stand-alone hot forming mills, 45 stand-alone finishing mills, and 11 stand-alone pipe and tube mills produce or process carbon steels.

Steel mills discharge process wastewater directly to surface water (direct discharge), to publicly owned treatment works (POTWs) (indirect discharge), both directly and indirectly, or not at all (zero or alternative discharge). Zero and alternative dischargers include sites that do not discharge process wastewater and sites that are completely dry (i.e., do not use water in iron and steel operations). Table 5-3 shows the discharge status of integrated and non-integrated steel mills and stand-alone facilities. A single mill may discharge process wastewater from one operation directly to surface waters and from another operation indirectly to a POTW.

All but one integrated mill discharge directly; two discharge both directly and indirectly. EPA estimates that among the 94 non-integrated steel mills, 46 are direct dischargers, 32 are zero or alternative dischargers, and 19 are indirect dischargers. For the 70 stand-alone finishing mills, EPA estimates 34 indirect dischargers, 28 direct dischargers, and 11 zero or alternative dischargers.

5.2 Manufacturing Operations

The following subsections describe the types of manufacturing operations performed at integrated and non-integrated steel mills and stand-alone iron and steel facilities. Table 5-4 lists the various manufacturing operations and EPA's national estimates of the number of sites performing each operation, 1997 production, and 1997 production capacity.

5.2.1 Cokemaking

Cokemaking is the manufacture of metallurgical coke from coal. There are two types of coke plants operated in the United States. By-product recovery coke plants recover several chemical by-products from coke oven gas. Non-recovery or heat recovery coke plants do not recover chemical by-products from the coke oven gas; the only by-product is heat, which is used to generate steam and electric power. In 1997, there were 23 by-product recovery coke plants and one non-recovery coke plant located in the United States (one additional non-recovery coke plant started operation after 1997).

Coke is used to reduce iron oxide to metallic iron in both blast furnaces and foundries; coke used for blast furnace operations is called furnace coke, and coke used for foundry operations is called foundry coke. Presently, foundry coke is produced only by by-product coke plants, and furnace coke is produced by both by-product recovery and non-recovery coke plants. Of the 24 coke plants operating in 1997, 19 primarily produce blast furnace coke, 4 primarily produce foundry coke, and 1 routinely produces both. Merchant by-product cokemaking operations provide more than 50 percent of the coke produced to operations, industries, or processes other than ironmaking blast furnaces. Iron and steel by-product cokemaking operations are those other than merchant cokemaking operations.

By-Product Recovery Coke Plants

By-product recovery coke plants comprise coal handling and preparation facilities, one or more coke batteries (i.e., groups of 40 or more vertical, slot-type coke ovens located side by side) equipped with coal charging and coke pushing equipment, coke oven gas collection and cleaning facilities, by-product recovery systems, coke quenching stations, and associated air and water pollution control facilities and solid waste processing operations.

Blends of high-, medium-, and low-volatile coals and other carbonaceous materials are pulverized and screened to desired size and charged into the tops of coke ovens with charging machines called larry cars. Different blends of coals are used to produce foundry

and furnace coke. The ovens are positive pressure ovens operated on a sequential batch basis. The coal charge is heated in the absence of air to drive off volatile materials and water to leave the carbonaceous residue called coke. The coking time is approximately 16 hours for furnace coke and approximately 28 to 30 hours for foundry coke. Coking temperatures in the ovens range from approximately 1,650 to 2,000°F (Reference 5-2).

When the coking cycle is completed, the oven doors are removed and the incandescent coke is pushed from the oven into a rail car called a coke quench car. Plants usually control air emissions from pushing operations with baghouses or wet scrubbers. The quench car is positioned under a quench station where large volumes of water quench the coke. All coke plants in the United States recycle and evaporate coke quench water, typically to extinction. The coke is then sized and stored for future use. Relatively fine coke particles collected in quench station sumps are called coke breeze. Coke breeze is reused as a charge material for production of foundry coke or for sinter plant operations, or sold for other uses.

Figure 5-5 presents a typical by-product cokemaking process diagram. Processed coke oven gas is ultimately used as a fuel for battery underfiring. Coke oven gas is scrubbed in gas collector mains, which are located on top of the coke battery, with a fluid called flushing liquor to condense tars and moisture derived from the coal. The flushing liquor is processed in tar decanter tanks to separate tar from the flushing liquor stream. Flushing liquor is recycled to the gas collector mains at a high rate. Primary gas coolers and electrostatic precipitators remove additional tar from coke oven gas. Exhausters pull the coke oven gas through the primary coolers and push the gas through the remainder of the by-product recovery plant. Final gas coolers lower the coke oven gas temperature further; the location of the final coolers depend on the types of by-products that are recovered at the plant.

Excess flushing liquor, also called waste ammonia liquor, is rejected from the flushing liquor circuit and is the principal process wastewater stream generated at by-product coke plants. Sludge collected at the bottom of the tar decanters is a listed hazardous waste and is typically mixed with coke breeze and other carbonaceous material and recycled to the coke ovens with the coal charge. The recovered tars are stored in tanks on site and sold as a by-product.

The by-product recovery cokemaking industry uses a variety of chemical processing technologies to recover additional products from coke oven gas and waste ammonia liquor, such as ammonia or ammonia compounds, sulfur and sulfur compounds, naphthalene, crude light oils, and phenols. The following technologies are used:

- *Recovery of ammonia and ammonia compounds.* Ammonia formed during by-product recovery cokemaking is recovered from both coke oven gas and waste ammonia liquor that is condensed from the gas (Reference 5-3). Ammonia is recovered from the waste ammonia liquor through distillation; overhead vapors from the distillation process are combined with the coke oven gas stream for further recovery of ammonia. Ammonia may be scrubbed directly from coke oven gas with sulfuric acid to produce

ammonium sulfate crystals. Using the Phosam process, ammonia may also be scrubbed directly from coke oven gas with phosphoric acid and then stripped. The overhead vapor from the stripper is condensed to form an aqueous ammonia feed for a fractionator, where anhydrous ammonia is produced. Ammonia may also be scrubbed from coke oven gas using water; the ammonia-rich water stream is generally sent to an ammonia stripper to produce ammonia vapors. Vapors from the ammonia stripper are typically combined with coke oven gas and can be combusted or destructed, or can be used to generate ammonium sulfate crystals using sulfuric acid or liquid ammonia using the Phosam process.

- *Recovery of sulfur and sulfur compounds.* Desulfurization systems recover elemental sulfur or sulfur compounds from coke oven gas. Techniques to remove sulfur include iron oxide boxes using Fe_2O_3 on wood shavings, absorption and desorption with soda ash, Wilputte vacuum carbonate systems, and Claus sulfur recovery systems.

- *Recovery of naphthalene.* Crystals of naphthalene are condensed from the coke oven gas in the final cooler and recovered from the recirculating final cooler wastewater by skimming, filtration, or centrifugation. Naphthalene may be recovered by solidification at temperatures below 74°C (165°F).

- *Recovery of crude light oils.* Crude light oils are scrubbed from coke oven gas with a recirculated wash oil solution. Crude light oil is an unrefined oil rich in benzene, toluene, xylene, and solvent naphthas. The oil is recovered for resale, reused as a solvent to recover phenolic compounds from waste ammonia liquor, or further refined on or off site.

- *Recovery of phenols.* Liquid/liquid extraction with suitable solvents is a common method to remove and recover phenols from waste ammonia liquor. In liquid/liquid extraction, light oil or other suitable solvents extracts phenolic compounds from waste ammonia liquor. The phenolized solvent is separated and extracted with caustic to form sodium phenolate. Because there is not a strong economic incentive, phenol recovery is not commonly performed.

Non-Recovery Coke Plants

Non-recovery coke plants carbonize coal in large dome-shaped oven chambers. The single non-recovery coke plant that was in operation in 1997 operates Jewell-Thompson non-recovery coke batteries (Reference 5-4). Coal is charged to the ovens with a conveyor charging machine. Volatile by-products generated during the cokemaking process are contained in the ovens by negative pressure and are thermally destroyed, thus eliminating the need for a by-products recovery plant. Combustion of these volatile components also provides some of the

heat for the cokemaking process. Air for combustion enters the ovens above the charge; the temperature in the ovens can be controlled by regulating the flow of air into the ovens. The volatile components are combusted in the sole flues beneath the cokemaking oven floors; additional air may be added to the sole flues to aid combustion. The gas is collected in a common waste heat tunnel above the ovens; the gas may then pass through an afterburner or a scrubber before being discharged to the atmosphere at a temperature of 1,600°F. Heat from the waste gases can be recovered to generate steam for electric power generation or for other uses.

Because non-recovery plants combust all materials evolved from the coal, there are no by-products recovered other than heat in the waste gases and coke breeze. The pushing and quenching operations are similar to those performed at by-product recovery coke plants. Non-recovery cokemaking operations do not generate process wastewater other than boiler blowdown and process storm water, which are typically disposed of by coke quenching.

5.2.2 Sintering

Sintering is a beneficiation process in which iron-bearing materials recovered from other iron and steel operations are mixed with iron ore, limestone, and finely divided fuel, such as coke breeze. During iron and steel production operations, blast furnaces, basic oxygen furnaces, continuous casters, and hot forming mills generate large quantities of particulate matter and other solids (e.g., fines, mill scale, flue dust, wastewater sludge). Sintering can recover a large percentage of these iron-rich materials, provided the oil content is low enough to prevent objectionable fumes. Sinter serves as a supplementary raw material for blast furnace operations.

Sinter plants consist of raw material handling facilities and raw material storage bins, a sinter strand (traveling grate combustion device), a mixing drum for each sinter strand, a windbox (draws air through the traveling grate), a discharge end, and a cooling bed for sintered product. The iron-rich materials are mixed in sinter machines and charged to the traveling grate at a depth of approximately one foot. The mixture is ignited, and air is drawn through the bed as it travels toward the discharge end to promote combustion and fusing of the iron-bearing materials. Sinter plants may operate either wet air pollution control systems or dry air pollution control systems. In 1997, seven sites reported that they used wet air pollution control systems to control air emissions from the sintering process, while two sites used dry air pollution control systems.

5.2.3 Briquetting

Briquetting is an agglomeration process used to recycle and reuse fine materials recovered from other iron and steel operations that otherwise could not be charged to blast furnaces or steelmaking furnaces. The operation forms materials into discrete shapes of sufficient size, strength, and weight for charging to a subsequent process (e.g., blast furnaces, BOFs). Materials are similar to those charged to sintering operations, although they are usually formed with the use of a binder and do not possess the strength of sintered products (Reference 5-5). Briquetting operations can be performed with or without heating the raw materials, and do

not generate process wastewater. EPA estimates that four facilities perform briquetting or similar agglomeration processes.

5.2.4 Blast Furnace Ironmaking

Blast furnaces produce molten iron, which is charged to BOFs. The blast furnace has several zones: a crucible-shaped hearth (bottom of the furnace), an intermediate zone called a bosh (between the hearth and the stack), a vertical shaft called the stack (between the bosh and furnace top), and the furnace top, which contains the mechanism for charging the furnace. The hearth and bosh walls are lined with carbon-type refractory blocks, and the stack is lined with high-quality fireclay bricks. To protect these refractory materials from burning out, cooling water circulates through exterior plates, staves, or sprays. Blast furnaces range between 70 and 120 feet in height, with hearth diameters between 20 and 45 feet (Reference 5-6). The rated capacity of blast furnaces ranges from under one million tons per year to over four million tons per year. There are 20 integrated steel mills with blast furnace operations in the United States.

The raw materials charged to the top of the blast furnace include coke, limestone, beneficiated iron ores or iron pellets, scrap, and sinter. Iron pellets, the dominant burden material (material charged to the furnace) in North America, include acid pellets and fluxed pellets, which are typically produced at or near iron ore mine sites. A continuous feed of alternating layers of coke, iron-bearing materials, and limestone are charged to the top of the furnace. Hot blast (preheated air) at temperatures between 1,650 and 2,300°F and injected fuel (e.g., pulverized coal, oil, natural gas) are blown into the bottom of the furnace (top of the hearth) through a bustle pipe and tuyeres (orifices) located around the circumference of the furnace (Reference 5-6). The preheated air reacts with the coke to produce the reducing agent, carbon monoxide. The reducing gases ascend through the furnace to reduce the iron-bearing materials to produce the molten iron and slag. The following chemical equations present a simplified summary of the chemical reactions that occur in a blast furnace:

$$3Fe_2O_3 + H_2 \rightarrow 2Fe_3O_4 + H_2O$$
$$3Fe_2O_3 + CO \rightarrow 2Fe_3O_4 + CO_2$$

$$Fe_3O_4 + H_2 \rightarrow 3FeO + H_2O$$
$$Fe_3O_4 + CO \rightarrow 3FeO + CO_2$$

$$FeO + H_2 \rightarrow Fe + H_2O$$
$$FeO + CO \rightarrow Fe + CO_2$$

$$3Fe + CO \rightarrow Fe_3C + H_2O$$
$$3Fe + 2CO \rightarrow Fe_3C + CO_2$$

$$CO_2 + C \rightarrow 2CO$$
$$H_2O + C \rightarrow CO + H_2$$

$FeO + C \rightarrow Fe + CO$

$3Fe + C \rightarrow Fe_3C$

The molten iron, at approximately 2,800 to 3,000°F, accumulates in the hearth and is tapped at regular intervals into refractory-lined cars for transport to the steelmaking furnaces. Limestone is a fluxing agent that forms fluid slag to dissolve unwanted impurities in the ore. Molten slag, which floats on top of the molten iron, is also tapped and processed for sale as a by-product. Blast furnace slag uses include railroad ballast, aggregate in cement manufacturing, and other construction uses. Wastewater or plant service water is used for slag cooling or quenching. Nineteen of the 20 integrated facilities surveyed use water for slag cooling at blast furnace operations.

The hot blast exits the furnace top as blast furnace flue gas in enclosed piping. A combination of dry dust catchers and high-energy venturi scrubbers clean and cool the gas. Stoves combust the cleaned gas to preheat the incoming air or the cleaned gas is used as fuel elsewhere at integrated mills. Direct contact water is applied in the gas coolers and high-energy scrubbers. All sites operating blast furnaces use wet air gas cleaning systems.

5.2.5 Direct-Reduced Ironmaking

Another method of producing iron is through direct reduction. Direct reduction produces relatively pure iron in solid pellet form by reducing iron ore at a temperature below the melting point of the iron produced. Direct-reduced iron (DRI) is produced through the same chemical reactions presented in Section 5.2.4 for blast furnace ironmaking. DRI is used as a substitute for scrap steel in EAF steelmaking to minimize contaminant levels in the melted steel and to allow economic steel production when market prices for scrap steel are high. There were two direct-reduced ironmaking plants in the United States operating in 1997 (an additional direct-reduced ironmaking facility started operation after 1997).

DRI can be produced by several different types of processes (Reference 5-5). DRI may be produced in shaft furnaces or fluidized beds, with the reducing gases generated outside of the reduction furnace. DRI may also be produced in rotary kilns or shaft or hearth furnaces, with the reducing gases generated inside the reduction furnace. Facilities in the United States use the Midrex® process, which produces DRI in a shaft furnace with reducing gases produced outside of the reduction furnace. The Midrex® process is discussed in more detail below.

The Midrex® process equipment consists of three main components: a direct-reduction shaft furnace, a gas reformer, and a cooling-gas system. The direct-reduction shaft furnace is divided into three zones: a preheat zone, a reduction zone, and a cooling zone. Iron ore is charged into the top of the furnace and heated in the preheat zone with ascending gases from the reduction zone. Reformed gas consisting of hydrogen and carbon monoxide, which reduce the iron ore, flows into the reduction zone at a temperature of approximately 875° C; the hydrogen and carbon monoxide are produced in the gas reformers from natural gas and scrubbed

reducing furnace top gas using a catalyst. The DRI formed in the reduction zone is cooled in the cooling zone using direct-contact cooling gas. The cooling gas is scrubbed and then recycled. DRI is continuously conveyed from the furnace through seal legs and screened to provide the final product. Direct-reduced ironmaking facilities have wet air pollution control systems to control furnace emissions and emissions from material handling and storage.

5.2.6 Steelmaking

Steelmaking in the United States is performed in either BOFs or EAFs. BOF and EAF processes are batch operations with tap-to-tap (batch cycle) times of about 45 minutes for BOFs and in the range of 1 hour to more than 1.5 hours for EAFs. BOFs typically produce high-tonnage carbon steels and EAFs produce low-tonnage carbon, alloy, and stainless steels.

Basic Oxygen Furnace (BOF)

The open hearth furnace process for steelmaking was replaced after World War II with the basic oxygen process (BOP). This process involves blowing oxygen through a lance into the top of a pear-shaped vessel. Lime addition to the charge removes phosphorus and sulfur impurities in the form of slag. Compared with the open hearth furnace, which had tap-to-tap times of 12 hours or more, steelmaking using BOP is a much quicker process. In addition, up to 35 percent of the charge could be steel scrap. After its invention, the BOP was modified. In addition to blowing oxygen directly onto the charge, the process involved also blowing burnt lime through the lance with the oxygen. This process allowed refining of pig iron smelted from high-phosphorus ores. Another process modification, developed in Canada and Germany in the mid-1960s, was the bottom-blown steelmaking process. This process used two concentric tuyeres, the outer with hydrocarbon gas and the inner with oxygen. This new process became know as Quelle-BOP (Q-BOP). Both the BOP and Q-BOP process are types of BOF steelmaking used today.

The BOF steelmaking process refines the product of the blast furnace (molten iron), which contains approximately 3.5 to 4.4 percent carbon, ≤ 0.05 percent sulfur, and ≤ 0.04 percent phosphorus. In steelmaking operations, the furnace charge consists of approximately two-thirds molten iron and one-third scrap steel. The furnace melts the charge and refines it by oxidizing silicon, carbon, manganese, phosphorus, and a portion of the iron in the molten bath. Various alloying elements are added to produce different grades of steel. Common alloying elements include aluminum, boron, chromium, copper, magnesium, molybdenum, niobium, nickel, silicon, and vanadium. The BOF allows close control of steel quality and the ability to process a wide range of raw materials.

Vessels used in the BOF process are generally vertical cylinders surmounted by a truncated cone. Typical heat sizes in BOFs range between under 100 tons per heat to over 300 tons per heat. Scrap and molten iron are first placed in the vessel. Oxygen is then injected into the molten bath either through the top of the furnace (top blown), bottom of the furnace (bottom blown), or both (combination blown). A violent reaction occurs immediately, bringing the

molten metal and hot gases into intimate contact, causing impurities to burn off quickly. Management of furnace slag processes controls residual sulfur. The slag is separated and removed from the molten steel. Alloys are added to the bath or as the steel is tapped (poured) into ladles. Slag material is charged back to the blast furnace to recover iron or used as railroad ballast. Similar to blast furnaces, BOF manufacturing facilities may use wastewater or plant service water for slag cooling or quenching. Eighteen of the 20 integrated facilities surveyed use water instead of air for slag cooling in BOF operations.

Off-gases from BOFs exit the vessel at temperatures of approximately 3,000°F. This gas contains approximately 90 percent carbon monoxide, 10 percent carbon dioxide, and may also contain ferrous oxide dust. BOF off-gas control systems include three types: semi-wet, wet-open combustion, and wet-suppressed combustion. Semi-wet systems condition furnace off-gases with moisture prior to processing in the electrostatic precipitators or baghouses. Wet-open combustion systems admit excess air to the off-gas collection system, allowing carbon monoxide to combust prior to high-energy wet scrubbing for air pollution control. Wet-suppressed combustion systems do not admit excess air to the off-gas collection system prior to high-energy scrubbing for air pollution control. BOF facilities use water for air pollution control systems designed to treat furnace off-gases prior to release into the atmosphere (Reference 5-6).

Electric Arc Furnace (EAF)

The EAF is designed to produce specific grades of steel. The first EAFs developed in the late 1800s and early 1900s could melt approximately one ton per heat. Typical heat sizes in current EAFs range between under one ton per heat to over 350 tons per heat. EPA estimates that 96 sites operate EAFs.

An EAF is a cylindrical vessel with a dish-shaped refractory hearth and three electrodes that lower from the dome-shaped, removable roof. Shell diameters depend on the heat size and range from 8 feet for a 10-ton vessel to 30 feet for a 300-ton vessel. Tar-bonded magnesite bricks form the lining of the furnace. The walls typically contain water-cooled panels that are covered to minimize heat loss. The electrodes may also be equipped with water cooling systems (Reference 5-6).

EAF steelmaking consists of scrap charging, melting, refining, deslagging, and tapping. In addition to scrap steel, the charge may include pig iron, DRI, and alloying elements. As the steel scrap is melted, additional scrap may be added to the furnace. The EAF generates heat by passing an electric current between electrodes through the charge in the furnace. Lime-rich slag removes the steel impurities (e.g., silicon, sulfur, and phosphorus) from the molten steel. Oxygen may be added to the furnace to speed up the steelmaking process. At the end of a heat, the furnace tips forward and the molten steel is poured off. EAFs in the United States are equipped with dry or semi-wet air pollution controls, and none discharge process wastewater.

5.2.7 Vacuum Degassing

Vacuum degassing is a refining process in which gases are removed from molten steel prior to casting to produce steel of high metallurgical quality. Vacuum degassing is used to control composition and temperature, remove oxygen (deoxidation) and hydrogen (degassing), decarburize, and otherwise remove impurities from the steel. Vacuum degassers are common at integrated and non-integrated mills that produce carbon, stainless, and certain alloy steels. Vacuum degassers often operate as part of ladle metallurgy stations (discussed in Section 5.2.8), where additional steel refining is conducted. EPA estimates that 44 sites operate vacuum degassing systems.

Steam ejectors create the vacuum for most vacuum degassing units. Gases removed from the molten steel come in contact with the injected steam, thereby contaminating the condensate wastewater. While the molten steel is under vacuum, elements that have a relatively higher vapor pressure volatilize and are present in the gases.

5.2.8 Ladle Metallurgy and Secondary Steelmaking

Ladle metallurgy and secondary steelmaking are steel refining operations that molten steels undergo at atmospheric conditions (i.e., no vacuum is applied) prior to casting. The purpose of ladle metallurgy and secondary steelmaking may include controlling gases in the steel, adjusting concentrations of metallic or nonmetallic compounds (alloying), and adjusting physical properties (e.g., temperature).

Common types of ladle metallurgy include argon or nitrogen bubbling and stirring, argon-oxygen decarburization, lance injection, magnetic stirring, and other alloy addition operations. Common types of secondary steelmaking include electroslag refining and other alloy addition operations. None of sites that conduct ladle metallurgy and/or secondary steelmaking reported generating or discharging process wastewater from these operations. EPA estimates that 103 sites use ladle metallurgy and/or secondary steelmaking; some sites may operate more than one type of process. The following table lists the numbers of sites in 1997 performing various types of ladle metallurgy and secondary steelmaking.

1997 National Estimate for Types of Ladle Metallurgy and Secondary Steelmaking Processes

Type of Ladle Metallurgy or Secondary Steelmaking	Number of Sites
Argon bubbling	66
Argon-oxygen decarburization	16
Electroslag remelting	10
Lance injection	19

Type of Ladle Metallurgy or Secondary Steelmaking	Number of Sites
Other (a)	37

Source: U.S. EPA, U.S. EPA Collection of 1997 Iron and Steel Industry Data (Detailed and Short Surveys).
(a) Other types of ladle metallurgy include alloy addition, reheating, magnetic stirring, ladle stirring, and carbon addition/adjustment.

5.2.9 Casting

Casting converts molten steel into a semi-finished product or shape that is suitable for further processing. There are two main types of casting operations: continuous casting and ingot casting. Molten steel is tapped from the BOF or EAF into ladles large enough to hold an entire heat. The ladles are then processed in ladle metallurgy stations and/or vacuum degassers prior to teeming (pouring) the steel into ingot molds or direct casting it into semi-finished shapes using continuous casters. EPA estimates that 113 sites operate casters.

Continuous Casting

Continuous casting is the most efficient and most common method of casting performed at steel mills. In the continuous casting process, molten steel is poured from the ladle into a refractory-lined tundish. The molten metal from the tundish pours through nozzles into an oscillating water-cooled copper mold, where the metal partially solidifies. The copper molds oscillate to prevent the molten steel from sticking to their sides. Lubricants spray into the molds to keep the steel moving through the mold. After passing through the water-cooled molds, the partially solidified product passes into a secondary cooling zone, where sprays of contact water cool the semi-finished product enough to solidify. The product then passes into the cut-off zone where it is cut to the desired length.

Continuous casting machines are configured with either single or multiple strands, which mold molten steel into the desired shapes. The three main types of continuous casters are based on the shape of the cast product: billet, bloom, and slab. Billet casters form squares or rounds between 3 and 7 inches thick and are multiple-strand casters (Reference 5-6); billet casters also form steel for seamless tube production. Bloom casters form sections ranging between 7 by 7 inches and 14.6 by 23.6 inches and are usually three-strand. Slab casters form sections up to 12 inches thick and 100 inches wide, and are usually single- or twin-strands. In addition, casters may form beams that are fed directly to I-beam or H-beam rolling mills. The following table presents continuous casting products and the number of sites casting these products in 1997.

1997 National Estimate For Types of Continuous Casting Products

Type of Cast Product	Number of Sites
Slab	28
Thin slab	8
Round billet	6
Rectangular or square billet	47
Bloom	12
Other (a)	7

Source: U.S. EPA, U.S. EPA Collection of 1997 Iron and Steel Industry Data (Detailed and Short Surveys).
(a) Other types of cast products include beam blanks and near net-shape products.

Ingot Casting

Ingot casting involves teeming the molten steel into ingot molds, and then cooling and stripping the ingots out of the molds. The ingots are then heated and rolled into blooms, billets, or slabs during hot forming. Because continuous casting directly forms the molten steel into blooms, billets, or slabs, increasing productivity and conserving energy, continuous casting has replaced most ingot casting operations. Ingot casting is used typically for small, specialty batches and for certain applications for producing plate. Twenty-two sites reported performing ingot casting.

5.2.10 Hot Forming

Hot forming is a process in which preheated (typically in the range of 1,800°F), solidified steel is reshaped through a series of forming steps in which mechanical pressure is applied through work rolls (Reference 5-2). Hot formed products have numerous cross-sections, lengths, and tonnages. While several different types of hot forming mills are in operation today, they can be grouped into four types:

- Primary mills;
- Section mills;
- Flat mills (plate, hot strip, and sheet); and
- Pipe and tube mills (seamless and butt-weld).

In general, hot forming primary mills reduce ingots to slabs or blooms, or blooms to billets. Section mills reduce billets to form rod, bar products, structural shapes (e.g., channels, angles), or other forms. Flat mills reduce slabs to plates or strips. Pipe and tube mills form seamless products from round billets and butt-welded products from strips.

Hand chipping, machine chipping, manual scarfing, grinding, milling, and machine scarfing are methods used to remove surface defects from blooms, billets, and slabs prior to hot rolling. Scarfing removes a thin layer of the steel surface by localized melting and oxidation. The process may be done manually (continuously moving an oxyacetylene torch along the length of the product), or by a scarfing machine located near the entry of the hot forming mill.

Flat mills, specifically hot strip mills, are the most common type of hot forming mills at integrated steel mills. Hot rolled strip is formed from a slab, which is heated in one or more furnaces. Scale is removed from the heated slab in a two-high rolling mill with vertical rolls. The rolls loosen the scale, and high-pressure water jets remove the scale. The slab then rolls through four-high roughing stands until it reaches a thickness of approximately 1.2 inches. The slab then passes to the finishing train, where a crop-shear cuts both ends and high-pressure steam jets remove scale. Six or seven four-high finishing stands roll the strip to a thickness between 0.06 and 0.4 inches. Both the roughing and finishing stands are usually arranged in tandem.

Butt-welded pipes and tubes are made from hot rolled strips with square or slightly beveled edges called skelp. The width of skelp corresponds to the circumference of the pipe, while the gauge corresponds to the wall thickness. Skelp is preheated to welding temperature in a reheat furnace and drawn through a die or roll forming a cylindrical shape. The edges are pressed together forming a butt-weld. Seamless pipes and tubes are usually made by a piercing process. The process heats, pierces, and shapes a solid round bar or billet to the desired diameter and wall thickness.

Forging is another type of steel forming where steel shapes are produced by hammering or by processing in a press (Reference 5-7). Forging operations can be conducted on cold, warm, or hot steel. Typically, ingots are forged into billets, flats, or rounds. Types of forging include open die forging, impression die forging, ring rolling, and extrusion. Open die forging is conducted with dies that do not completely confine the steel that is being shaped, and is generally used to shape large parts, such as shafts, sleeves, and disks. Impression die forging is conducted in a die that completely encloses the steel shape that is being formed; impression die forging accounts for the majority of forging production. Ring rolling produces seamless rolled rings in a variety of dimensions. Extrusion is conducted by placing a steel shape in a container and compressing it until the steel travels through an opening to form an extruded product. Secondary forging processes and special techniques, such as drawing, ironing, bending, trimming, coining, and swaging, may also be conducted on steel shapes.

The following table presents the national estimate for types of hot forming operations and the number of sites performing these operations in 1997.

1997 National Estimate for Hot Forming Operations

Hot Forming Operation	Number of Sites
Rolling mill	122
Pipe and tube mill	6
Forging	14

Source: U.S. EPA, U.S. EPA Collection of 1997 Iron and Steel Industry Data (Detailed and Short Surveys).

The following table presents the national estimate for types of hot forming products and the number of sites producing these products in 1997.

1997 National Estimate for Hot Forming Products

Type of Hot Forming Product	Number of Sites
Bar	67
Beam (a)	8
Billet	25
Bloom (a)	7
Plate	21
Railroad rail (a)	4
Reinforcing bar	25
Rod	17
Sheet	11
Slab (a)	16
Small structural	23
Strip	25
Tube and pipe	21
Other (b)	44

Source: U.S. EPA, U.S. EPA Collection of 1997 Iron and Steel Industry Data (Detailed and Short Surveys).
(a) This estimate does not represent a national estimate of sites producing this product because it is based on data from only the detailed survey. Short surveys did not collect this level of detail on products.
(b) Other hot forming products include various miscellaneous product shapes.

Hot forming mills generally use water for scale breaking, flume flushing, and direct contact cooling. The water often recirculates in cooling water systems. Sites may have multiple hot forming contact water and/or rolling solution systems. Forging wastewater sources are very similar to those for hot forming.

5.2.11 Finishing

Steel finishing operations follow hot forming operations; therefore, integrated steel mills and those stand-alone steel finishing mills that receive steel from integrated steel mills are most likely to perform steel finishing operations. Integrated steel mills in the United States principally produce flat-rolled steel products that require finishing, such as hot rolled strip (hot bands), pickled and oiled strip, cold rolled and annealed strip and sheet, hot coated strip (principally zinc and zinc/aluminum), electroplated strip (principally chromium, tin, and zinc), and plates. Several non-integrated steel mills produce flat-rolled products, but most produce bar and bar products and small structural shapes. Non-integrated steel mills are more likely to ship hot rolled products without further surface treatments or finishing.

The type of steel finishing operation is closely related to the type of steel processed. For carbon steels, acid pickling with hydrochloric acid, cold forming and annealing, temper rolling, acid and/or alkaline cleaning, hot coating, and electroplating are performed. For stainless steels, descaling (molten salt bath and electrolytic sodium sulfate); sulfuric, nitric, nitric/hydrofluoric acid and sometimes hydrochloric acid pickling; cold forming and annealing; and temper rolling are likely to be performed. A number of steel finishing mills also perform surface coating of electrical steels.

Acid Pickling and Descaling

Acid pickling and descaling operations clean the steel surface prior to further processing (e.g., cold forming, application of protective and decorative coatings). The steel surface must also be cleaned at various production stages to ensure that oxides that form on the surface are not worked into the finished product, causing marring, staining, or other surface imperfections.

The acid pickling process chemically removes oxides and scale from the surface of the steel using water solutions of inorganic acids. While acid pickling is only one of several methods of removing undesirable surface oxides, it is most widely used because of comparatively low operating costs and ease of operation. Carbon steel is usually pickled with hydrochloric acid; stainless steels are pickled with sulfuric, hydrochloric, nitric, and/or hydrofluoric acids. The Agency estimates that 38 of the 69 acid pickling sites use hydrochloric acid, 33 use sulfuric acid, 28 use hydrofluoric acid, and 28 use nitric acid. The pickling process uses various organic chemicals that inhibit the acid from attacking the base metal while permitting it to attack the oxides. Wetting agents improve the effective contact of the acid solution with the metal surface. After the pickling bath, the steel passes through one or more rinse operations.

Finishing mills that conduct pickling operations may regenerate or recover the spent acid by removing the iron; acids can then be reused by the mill. Hydrochloric acid and sulfuric acid are the more commonly regenerated or recovered acids, although stainless steel finishing mills also recover nitric and mixed nitric/hydrofluoric acids.

Two common types of descaling operations are blast cleaning and salt bath descaling. Blast cleaning (mechanical descaling) uses abrasives such as sand, steel, iron grit, or shot to clean the steel surface. The abrasives come in contact with the steel using either a compressed air blast cleaning apparatus or by a rotary-type blasting cleaning machine. Salt bath descaling, a surface treatment operation, processes stainless or alloy steel products in molten salt solutions. This operation uses the physical and chemical properties of molten salt baths to loosen heavy scale from selected stainless and high-alloy steels; the scale is removed in subsequent water-quenching steps. Two processes, oxidizing and reducing, are commonly referred to by the names of proprietary molten salt descaling baths, Kolene® and Hydride®, respectively. Descaling may also be performed using an electrolytic solution of sodium sulfate.

Of the 69 sites operating acid pickling and descaling systems, 41 reported using wet air pollution control, and 14 reported using dry air pollution control. The remaining sites did not report the use of pollution control.

Cold Forming

Cold forming involves cold rolling of hot rolled and pickled steels at ambient temperatures to impart desired mechanical and surface properties in the steel. Cold rolling operations reduce the thickness of the steel much less than it is reduced in hot forming operations. Cold rolling imparts hardness to steel. The following table shows common products formed during cold forming.

1997 National Estimate for Type of Cold Forming Product

Type of Cold Forming Product	Number of Sites
Plate	5
Sheet	21
Strip	47

Source: U.S. EPA, U.S. EPA Collection of 1997 Iron and Steel Industry Data (Detailed and Short Surveys).

Common cold rolling mills in the iron and steel industry include tandem and temper mills. Tandem mills modify steel sheet properties, including strength, surface properties, and thickness. They are typically used in a series of three to five stands. Temper mills slightly improve the finish of steel sheet, such as shiny, dull, or grooved surfaces, and generally do not modify shape or thickness; they primarily improve flatness, alter mechanical properties, and

minimize surface disturbances. Temper mills are typically used with only one or two stands (Reference 5-8).

Sendzimir cold rolling mills, commonly referred to as Z-mills, are another type of cold forming operation. Z-mills have various configurations, but generally steel passes through work rolls that are supported and driven by first- and second-intermediate rolls. The mill design allows for quick adjustments to vary the width, thickness, and hardness of the rolled steel. These mills typically use hydraulic fluid or oil emulsions rather than aqueous rolling solutions.

Cold rolling operations generate heat that is dissipated by flooded lubrication systems. These systems use palm oil or synthetic oils that are emulsified in water and directed in jets against the rolls and the steel surface during rolling.

Surface Treatment and Annealing Operations

Surface treatment and annealing operations include alkaline cleaning, annealing, hot coating, and electroplating. Facilities performing finishing operations often have a number of these operations on a single line.

Alkaline cleaning removes mineral and animal fats and oils from the steel surface. Caustic, soda ash, alkaline silicates, and phosphates are common alkaline cleaning agents. Passing the steel through alkaline solutions of specified compositions, concentrations, and temperatures is often enough to clean the product; however, for large-scale production or a cleaner product, sites may use electrolytic cleaning. Adding wetting agents to the cleaning bath also facilitates cleaning.

The annealing process heats steel to modify its bulk properties, which makes the steel easier to form and bend. Steel is heated and kept at a designated temperature and then cooled at a designated rate. Through the annealing process, the metal grain size increases, new bonds are formed at the higher temperature, and the steel becomes more ductile. Sites perform annealing through a batch or continuous process; they may follow annealing operations with a water quench to cool the steel for further processing.

Steel coating operations, such as hot coating and electroplating, improve resistance to corrosion or appearance. Hot coating operations involve immersing precleaned steel into molten baths of tin, zinc (hot galvanizing), combinations of lead and tin (terne coating), or combinations of aluminum and zinc (galvalume coating); any associated cleaning or fluxing (used to facilitate metal application) steps prior to immersion; and any post-immersion steps (e.g., chromium passivation). Based on survey responses, the metals used for hot coating operations include zinc, zinc/aluminum alloy, aluminum, chromium, lead, antimony, tin/lead alloy, and zinc/nickel alloy.

Electroplating uses electrodes to deposit a metal coating onto the steel. Historically, electroplating at steel mills was limited to tin and chromium electroplating for food

and beverage markets and relatively low-tonnage production of zinc electroplated (electrogalvanized) steel for the automotive market. New coatings consisting of combinations of iron, nickel, and other metals have been developed. Based on survey responses, the metals used for electroplating operations include zinc, chromium, tin, nickel, brass, cobalt, copper, nickel/tin alloy, zinc/nickel alloy, and zinc/iron/aluminum alloy.

EPA estimates that, of the 98 sites performing surface treatment operations, 38 operate wet air pollution control systems and 16 operate dry systems.

5.3 References

5-1 American Iron and Steel Institute (AISI). Annual Statistical Report. Washington, DC, 1998.

5-2 U.S. Environmental Protection Agency. Preliminary Study of the Iron and Steel Category: 40 CFR Part 420 Effluent Limitations Guidelines and Standards. EPA 821-R-95-037, Washington, DC, September 1995.

5-3 Association of Iron and Steel Engineers. The Making, Shaping and Treating of Steel (10th edition). ISBN 0-930767-00-4, Pittsburgh, PA, 1985.

5-4 Knoerzer, Jeremy; Ellis, Charles E. The Design and Operation of Jewell's New Nonrecovery Coke Oven Batteries.

5-5 Association of Iron and Steel Engineers. The Making, Shaping and Treating of Steel (11th edition), Ironmaking Volume. Pittsburgh, PA, 1999.

5-6 Encyclopedia Britannica. Britannica.com. http:\\www.britannica.com, Chicago, IL.

5-7 The Forging Industry Association. The Forging Industry Association's How Are Forgings Produced?. http://www.forging.org/facts/wwhy6.htm, 2000.

5-8 American Iron and Steel Institute. AISI's Everything You Always Wanted to Know About Steel. . . A Glossary of Terms and Concepts. Courtesy of Michelle Applebaum, Managing Director (Summer 1998). Salomon Smith Barney Inc, http://www.steel.org/learning/glossary/, 2000.

Table 5-1

1997 National Estimate of Types of Iron and Steel Sites in the United States

Type of Site	Total Number of Sites Operating in 1997 (% of Industry Total)
Integrated steel mill with coke plant	9 (3.5%)
Integrated steel mill without coke plant	11 (4.5%)
Stand-alone coke plant	15 (6.0%)
Stand-alone sintering plant	2 (<1%)
Stand-alone direct-reduced ironmaking plant	1 (<1%)
Non-integrated steel mill	94 (37%)
Stand-alone hot forming mill	39 (15.5%)
Stand-alone finishing mill	70 (28%)
Stand-alone pipe and tube mill	11 (4.5%)
TOTAL (a)	**254**

Source: U.S. EPA, U.S. EPA Collection of 1997 Iron and Steel Industry Data (Detailed and Short Surveys).
(a) Columns do not sum to totals because of rounding each number and because two sites are counted as one integrated steel mill.

Table 5-2

1997 National Estimate of Sites Producing or Processing Carbon, Alloy, or Stainless Steel

Type of Site (a)	Total Number of Sites (a)	Number of Sites Producing Each Type of Steel		
		Carbon Steel	Stainless Steel	Alloy Steel
Integrated steel mill with coke plant	9	9	1	6
Integrated steel mill without coke plant	11	11	2	5
Non-integrated steel mill	94	72	20	58
Stand-alone hot forming mill	39	26	10	19
Stand-alone finishing mill	70	45	24	21
Stand-alone pipe and tube mill	11	11	0	6
TOTAL	**234**	**174**	**57**	**115**

Source: U.S. EPA, U.S. EPA Collection of 1997 Iron and Steel Industry Data (Detailed and Short Surveys).
(a) The sum of the numbers of sites producing each steel type may not equal the total number of sites. Sites may produce more than one steel type.

Table 5-3

1997 National Estimate of Direct, Indirect, and Zero or Alternative Discharging Sites

Type of Site	Total Number of Sites (a)	Number (%) of Direct Dischargers	Number (%) of Indirect Dischargers	Number (%) of Zero or Alternative Dischargers (b)
Integrated steel mill with coke plant	9	8 (89%)	3 (33%)	0 (c)
Integrated steel mill without coke plant	11	11 (100%)	0 (c)	0 (c)
Stand-alone coke plant	15	9 (60%)	5 (33%)	1 (7%)
Stand-alone sintering plant	2	1 (50%)	0 (c)	1 (50%)
Stand-alone direct-reduced ironmaking plant	1	0 (c)	1 (100%)	0 (c)
Non-integrated steel mill	94	46 (49%)	19 (20%)	32 (34%)
Stand-alone hot forming mill	39	22 (56%)	6 (15%)	12 (31%)
Stand-alone finishing mill	70	28 (40%)	34 (49%)	11 (16%)
Stand-alone pipe and tube mill	11	8 (72%)	3 (27%)	0 (c)
TOTAL (d)	**254**	**133 (53%)**	**70 (28%)**	**56 (22%)**

Source: U.S. EPA, U.S. EPA Collection of 1997 Iron and Steel Industry Data (Detailed and Short Surveys).
(a) The sum of direct dischargers, indirect dischargers, and zero dischargers may not equal the total number of sites. Sites may directly and indirectly discharge wastewater from their site.
(b) Zero dischargers include sites that do not discharge process wastewater and sites that are completely dry (i.e., do not use water in iron and steel operations).
(c) Cells with a zero (0) value indicate that none of the survey respondents have the characteristic.
(d) Columns do not sum to totals because of rounding each number and because two sites are counted as one integrated mill.

Table 5-4

1997 National Estimate of Actual Production and Rated Capacity by Manufacturing Operation

Manufacturing Operation	Total Number of Sites with this Operation	Total 1997 Production (million standard tons)	Total 1997 Rated Capacity (million standard tons)
Cokemaking	24	20.4	22.6
Sintering	9	12.4	17.9
Blast furnace ironmaking	20	54.5	68.6
BOF steelmaking	20	65.9	78.3
EAF steelmaking	96	50.8	75.8
Vacuum degassing	44	18.0	39.1
Ladle metallurgy	103	102	157
Casting	113	110	142
Hot forming	153	127	177 (a)
Acid pickling and descaling	69	48.3	67.9 (a)
Cold forming	103	72.8	105
Surface cleaning and coating	98	35.3	40.1
Briquetting and other agglomeration process	4	0.319	0.731
Direct-reduced ironmaking	2	0.581	1.56

Source: U.S. EPA, U.S. EPA Collection of 1997 Iron and Steel Industry Data (Detailed and Short Surveys).
(a) This estimate does not represent a national estimate of capacity because it is based on data only from the detailed survey. Production capacity was not requested in the short survey.

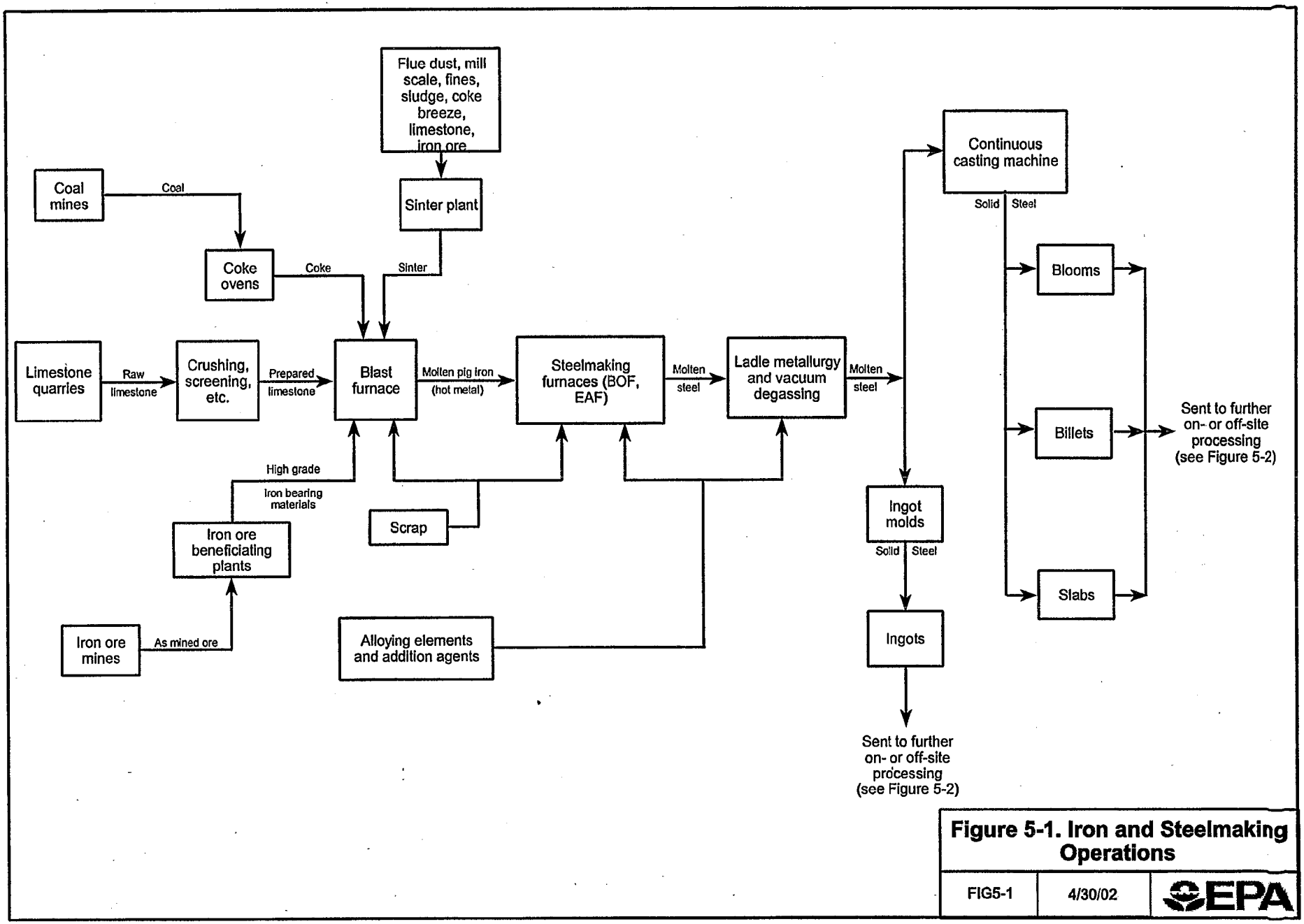

Figure 5-1. Iron and Steelmaking Operations

FIG5-1	4/30/02	EPA

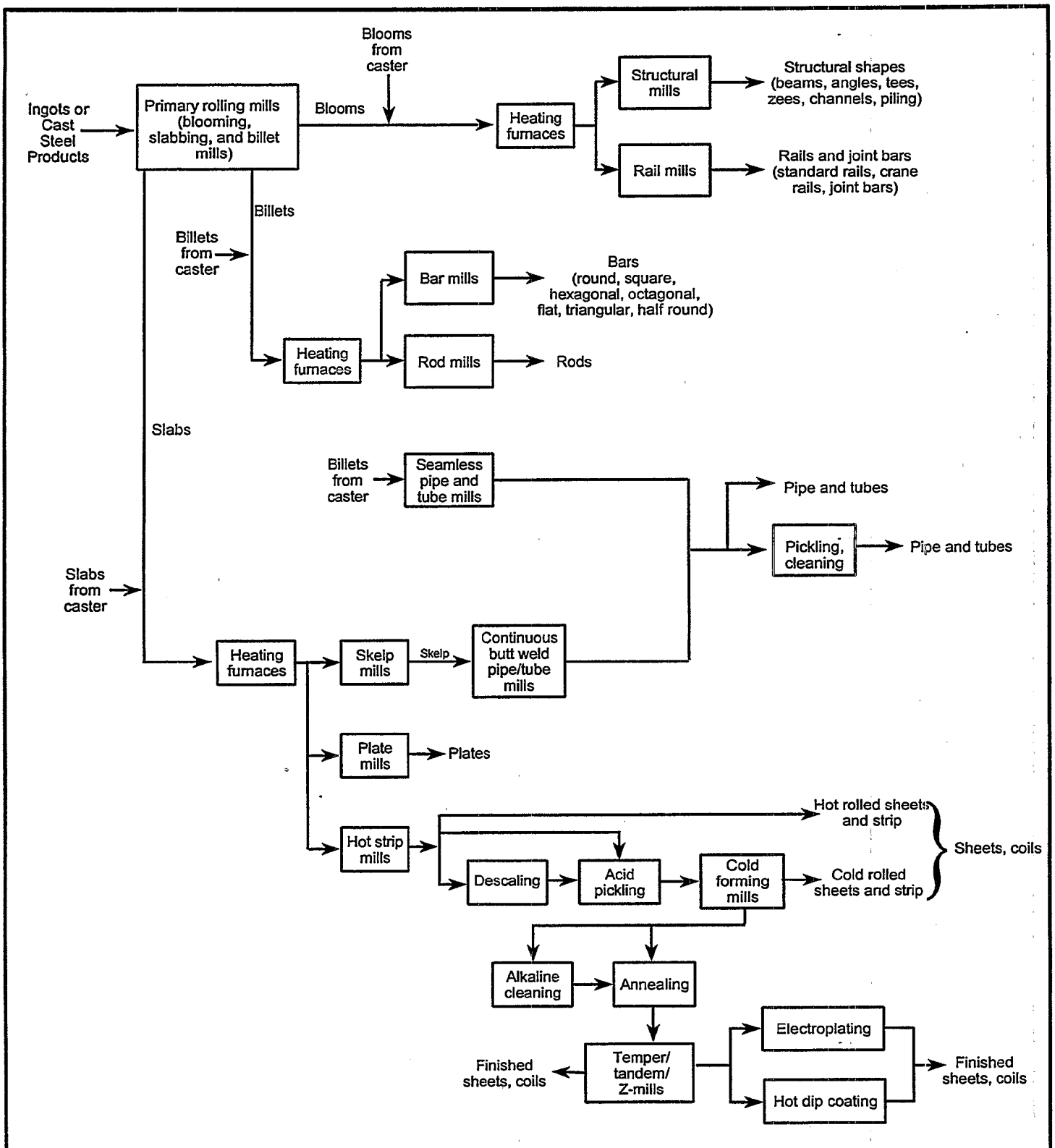

Figure 5-2. Forming and Finishing Operations

FIG5_2	4/30/02	EPA

Figure 5-3.
Integrated Steel Manufacturing Sites

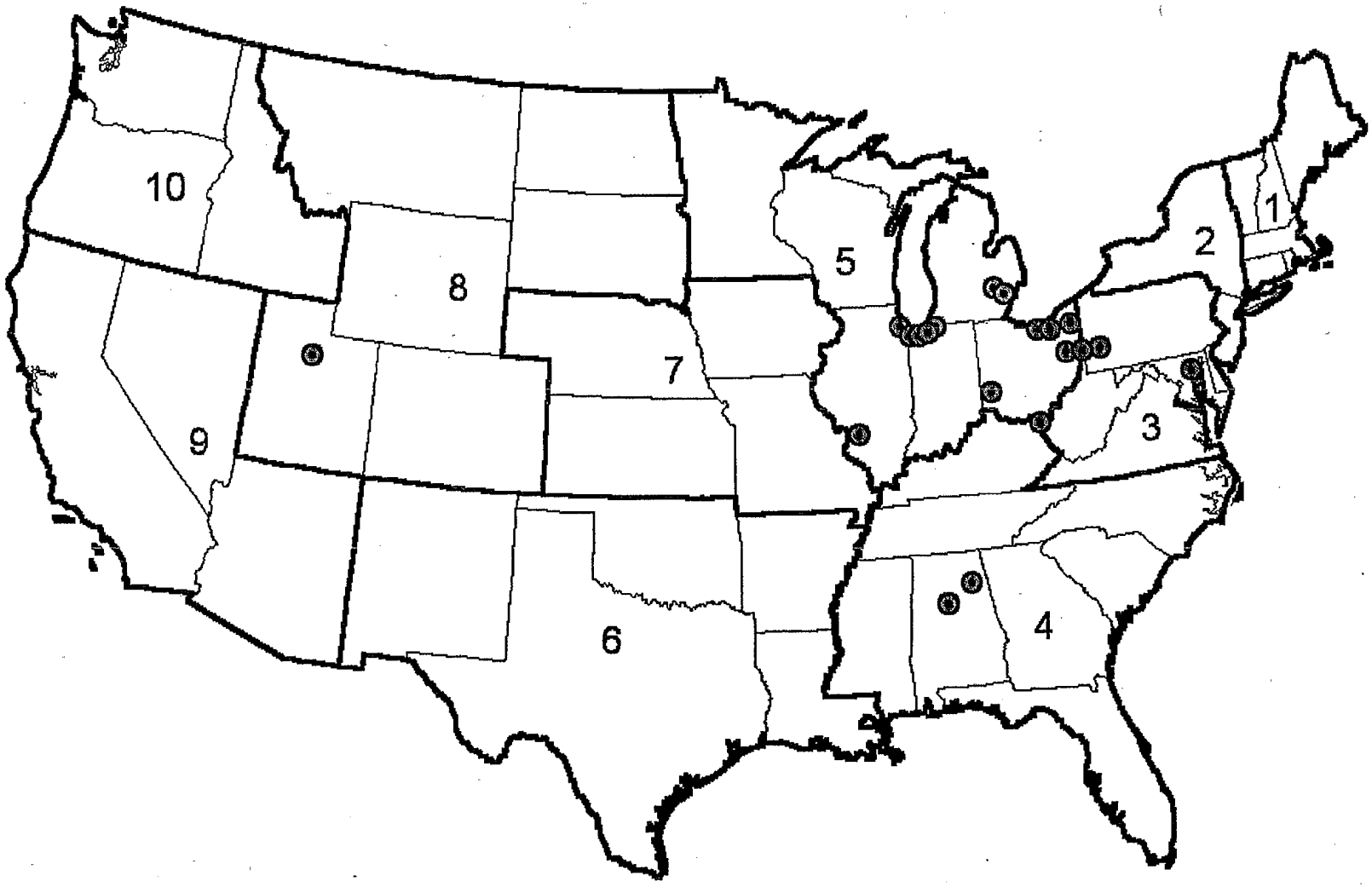

Smaller stand-alone forming and finishing facilities are generally located near steel manufacturing sites.

Figure 5-4.
Cokemaking Sites

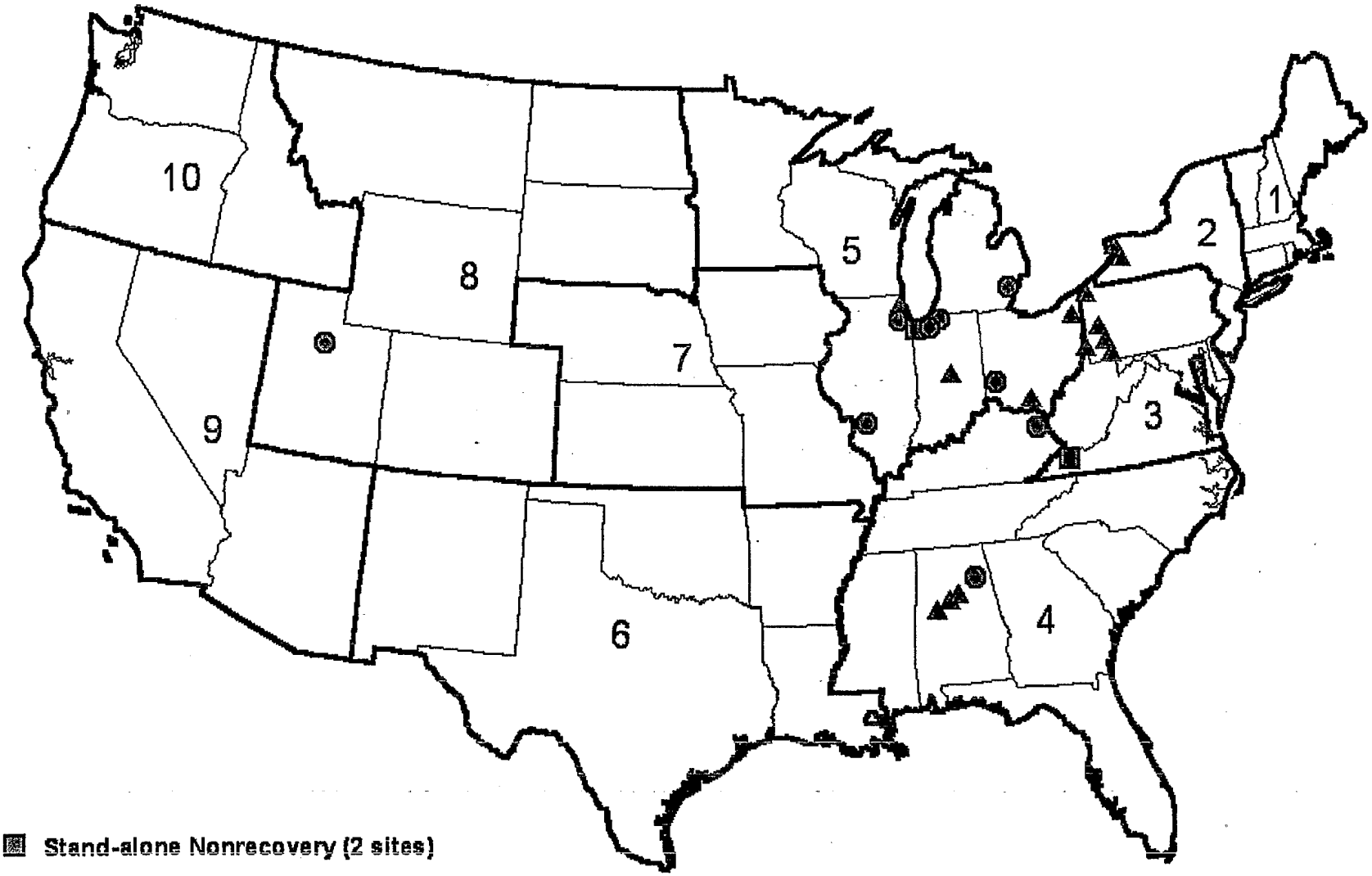

Stand-alone Nonrecovery (2 sites)

By-product Recovery Co-located at Integrated Steel Mills (9 sites)

Stand-alone By-product Recovery (14 sites)

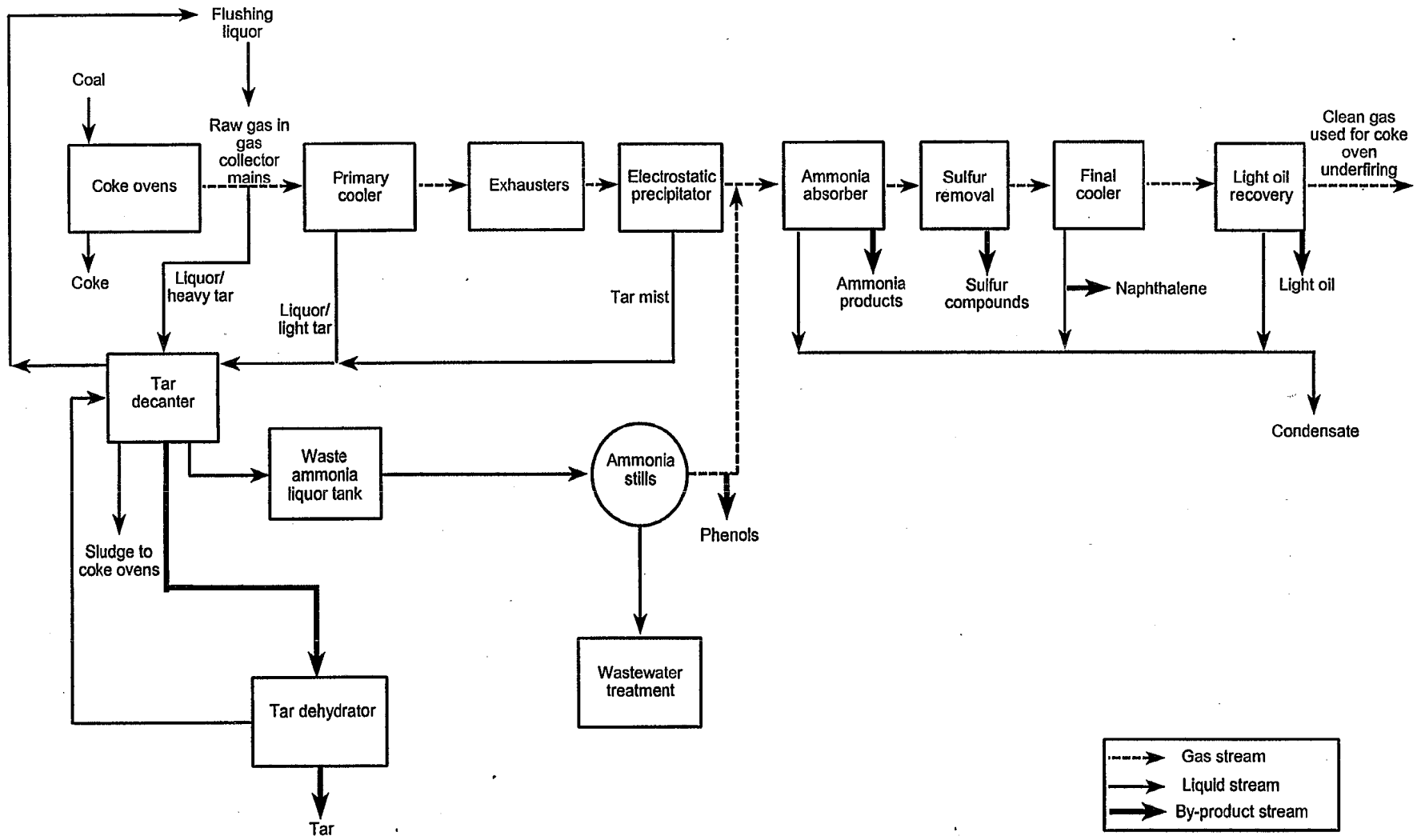

Figure 5-5. By-Product Recovery Cokemaking Process Diagram

FIG5-5	4/30/02	EPA

SECTION 6

SUBCATEGORIZATION

This section presents a discussion on subcategorization for today's iron and steel effluent limitations guidelines and standards. Section 6.1 presents background on EPA's subcategorization process and describes the factors EPA evaluated for this rulemaking. Section 6.2 presents information on the proposed subcategorization structure. Section 6.3 presents the final subcategorization analyses, structure, and rational, and describes each of the subcategories and segments.

6.1 Subcategorization Factors

The CWA requires EPA, in developing effluent limitations guidelines and standards, to consider a number of different factors (Section 304(b)(2)(b), 33 U.S.C. § 1314 (b)(2)(B)). Among others, these factors include

- Age of equipment and facilities;
- Location;
- Size of site;
- Manufacturing processes employed;
- Wastewater characteristics; and
- Non-water quality environmental impacts.

One way the Agency has taken some of these factors into account is by breaking down categories of industries into separate classes of similar characteristics. This recognizes the major differences among companies within an industry that may reflect, for example, different manufacturing processes or other factors.

EPA considered all the relevant factors in developing the subcategorization structure for the existing iron and steel regulation, which is based on manufacturing operation and/or product produced. In developing today's final rule for the iron and steel industry, EPA reviewed the existing subcategorization structure to determine whether it is still appropriate. EPA used information from industry survey data, EPA site visits, sampling data, and public comments (discussed in Chapter 2) to re-evaluate and consider each of the statutory factors listed above as they affect the current industry.

For both the proposed and final rule, EPA concluded that, like the existing subcategorization structure, the majority of these factors do not support subcategorization. EPA first evaluated the age of facilities with respect to production-normalized wastewater discharge rates (volume of water discharged with respect to production). The comparison between the age of the facilities and the respective process wastewater discharge rates showed no relationships between mill age and the volume of process wastewater discharged. Therefore, the Agency determined that the age of facilities and equipment did not have an impact on wastewater generation or discharge. The Agency's analysis of age versus wastewater discharge rate are

located in the administrative record for the rule. (See DCNs IS10357, IS10359, IS10362, and IS10441 of Section 14.1 of the Administrative Record.)

Similarly, the Agency also evaluated age with respect to installing or upgrading wastewater treatment equipment and found that while a site or a plant may have been operating for several decades, manufacturing and treatment system upgrades regularly occur. In certain cases, older sites actually have modern wastewater treatment systems and have demonstrated model BAT treatment. Consequently, the Agency has determined that subcategorization was not warranted on the basis of age. (See DCN IS04614 of Section 5.2 of the Administrative Record.)

The Agency analyzed location of the sites with respect to the amount of process wastewater discharged. While the Agency realizes that facilities located in arid and semi-arid regions of the country have greater opportunity for decreased discharge flow rates due to water loss from evaporation, the flow allowances used to develop the final regulation have been determined to be achievable in any region of the country. Therefore, the Agency determined that location was not a significant criterion for subcategorization. The data from EPA's analysis of location versus wastewater discharge rate are located in the administrative record for this rule. (See DCNs IS10357, IS10359, IS10362, and IS10441 of Section 14.1 of the Administrative Record.)

While larger iron and steel sites discharge greater total volumes of wastewater, the size of a site (e.g., acreage, number of employees) did not have an impact on production-normalized wastewater discharge rates or pollutant concentrations. Consequently, the Agency determined that size was also not a significant factor for subcategorization. (See DCNs IS10357, IS10359, IS10362, and IS10441 of Section 14.1 of the Administrative Record.)

Similarly, EPA evaluated non-water quality impacts, such as solid waste and air emission effects, and determined that non-water quality environmental impacts did not constitute a basis for subcategorization in the final rule. A detailed discussion of non-water quality impacts is presented in Section 15.

Of all the subcategorization criteria, EPA identified manufacturing processes as the most significant factor affecting the final subcategorization structure because it had the greatest impact on wastewater generation and characteristics. In addition, EPA used type of product and wastewater characteristics, including flow rates with respect to production and type of pollutant present, to segment within each subcategory. A detailed discussion of wastewater sources, pollutant loadings, option selection, regulated pollutants, and production-normalized flow rates for each segment is presented in Sections 7, 9, 11, 12, and 13 of this document.

Since many of the elements considered for subcategorization, including statutory factors, have not changed since the 1982 rule, refer to Volume I of the Technical Development for the 1982 regulation (pages 155 to 163, EPA 440/1-82/024, May 1982) for a more detailed review of the above factors.

6.2 Proposed Subcategorization

On December 27, 2000, EPA proposed a subcategorization structure that was significantly different from the structure in the 1982 iron and steel rule (see 65 FR 65 FR 81964, 81974-81975). The Agency proposed to revise the subcategorization structure to create seven subcategories of iron and steel facilities based on co-treatment of compatible waste streams. This would have replaced the present structure of 12 subcategories. EPA proposed the following seven subcategories:

Subpart	Subcategory	Segment
Subpart A	Cokemaking Subcategory	By-Product Recovery Non-Recovery
Subpart B	Ironmaking Subcategory	Blast Furnace Sintering
Subpart C	Steelmaking Subcategory	
Subpart D	Integrated and Stand-Alone Hot Forming Mills Subcategory	Carbon and Alloy Stainless
Subpart E	Non-Integrated Steelmaking and Hot Forming Operations Subcategory	Carbon and Alloy Stainless
Subpart F	Steel Finishing Subcategory	Carbon and Alloy Stainless
Subpart G	Other Operations Subcategory	Direct-Reduced Ironmaking Forging Briquetting

The Agency proposed to consolidate sintering and ironmaking into a single "ironmaking subcategory." Additionally, the Agency consolidated steelmaking processes combining basic oxygen furnace (BOF), vacuum degassing, and continuous casting into the "steelmaking subcategory." The Agency also attempted to separate integrated mills hot forming operations from non-integrated mills operations (electric arc furnace steelmaking, vacuum degassing, continuous casting, and hot forming). Unlike the 1982 rule, EPA proposed to consolidate operations such as salt bath descaling, acid pickling, and other finishing operations into a single "steel finishing subcategory." In addition, one new subcategory, "other operations subcategory," has been created to regulate direct-reduced ironmaking, briquetting, and forging.

In addition to the revised subcategory structure, EPA proposed segmentation changes in the proposed cokemaking, ironmaking (sintering), integrated steelmaking, integrated and stand-alone hot forming, non-integrated steelmaking and hot forming, and finishing subcategories. First, EPA proposed to combine two 1982 segments in the cokemaking subcategory, "iron and steel" and "merchant," into a single "by-product recovery" segment because differences in wastewater flow rates observed in the 1982 rulemaking are no longer apparent within the current population of by-product coke plants. In addition to combining all by-product recovery cokemaking operations into one segment, the Agency also proposed a new

"non-recovery" segment to accommodate the two non-recovery coke plants. Second, for the proposed integrated and stand-alone hot forming subcategory, the non-integrated steelmaking and hot forming subcategory, and the steel finishing subcategory, EPA proposed segmenting based on whether facilities primarily make stainless or carbon/alloy steels.

The Agency proposed this subcategorization structure to reflect not only the modern state of the industry, in terms of both process and wastewater management, but also the experience that the Agency and other regulatory entities have gained from implementing the 1982 iron and steel effluent limitations guidelines and standards. EPA also expected that the revised subcategorization structure would simplify the regulatory process and reflect co-treatment of compatible wastewaters, which is currently practiced by the industry. As a result, many of the proposed subcategories would have included various operations that are regulated under different segments or subcategories in the 1982 rule.

Table 6-1 presents a comparison of the 1982 subcategorization structure and the structure EPA proposed on December 27, 2000. For a detailed discussion of the proposed subcategorization, see Section 6 of the Development Document for the Proposed Iron and Steel Manufacturing Point Source Category, EPA 831-B-00-011, December 2000.

6.3 Final Subcategorization

While EPA did not receive any comments specific to the proposed subcategorization structure, the Agency did receive a number of comments on the change in segmentation for the cokemaking subcategory. The comments opposed EPA's proposal to drop the segmentation of "iron and steel" and "merchant" coke plants; however, the comments agree with EPA's assessment that production process and wastewaters from these types of plants coke plants are similar. The Agency also evaluated potential economic differences among these plants in order to see whether they justified retaining the 1982 segmentation. Although some difference in facility size was observed, EPA did not find substantial differences in profitability or other factors that might affect economic achievability. Some commenters also expressed confusion regarding the segmentation of stainless and carbon/alloy steels.

Following proposal, the Agency re-evaluated the economic conditions and technology bases of the proposed rule. The Agency decided to promulgate new or revised limits for only three subcategories (cokemaking, sintering, and other operations), and for segments within two others (ironmaking and steelmaking). These decisions similarly affected the final subcategorization structure. Due to the small number of subcategories affected by today's rule, the Agency has decided to retain the 1982 subcategory structure with the addition of an "other operations subcategory." As a result, the final rule covers the following 13 subcategories:

Subcategory	Description
Subcategory A	Cokemaking (includes by-product recovery and non-recovery operations)
Subcategory B	Sintering (includes wet and dry air pollution control operations
Subcategory C	Ironmaking
Subcategory D	Steelmaking (includes basic oxygen furnace and electric arc furnace operations)
Subcategory E	Vacuum degassing
Subcategory F	Continuous casting
Subcategory G	Hot forming
Subcategory H	Salt bath descaling
Subcategory I	Acid pickling
Subcategory J	Cold forming
Subcategory K	Alkaline cleaning
Subcategory L	Hot coating
Subcategory M	Other operations (includes forging, direct-reduced ironmaking, and briquetting operations)

For the cokemaking subcategory, this final rule combines the "iron and steel" and "merchant" segments into a newly-created "by-product recovery" cokemaking segment for most regulatory purposes, although EPA is retaining the "iron and steel" and "merchant" segments for purposes of reflecting the existing BPT/BCT limitations. EPA is also creating a new cokemaking segment for non-recovery operations and a new sintering segment for dry air pollution control systems. Because the promulgated rule makes no change to subcategorization for the steelmaking, hot forming, vacuum degassing, casting, or various finishing operations, the segmentation for these operations in the 1982 rule remains applicable. Finally, the Agency is creating a new subcategory, the "other operations subcategory." The complete final subcategorization structure is presented in Table 6-2. A detailed discussion of each subcategory, in the structure of the 2000 proposal follows.

6.3.1 Proposed Subpart A: Cokemaking

Cokemaking turns carbon in raw coal into metallurgical coke, which is subsequently used in the ironmaking process. There are two types of cokemaking operations: by-product recovery and non-recovery. In by-product coke plants, metallurgical coke is produced by distilling coal in refractory-lined, slot-type ovens at high temperatures in the absence of air. In non-recovery coke plants, coal is made into coke in negative pressure, higher temperature coke ovens.

In by-product coke operations, the moisture and volatile components generated from the coal distillation process are collected and processed to recover by-products, such as crude coal tars, light crude oil, etc. Non-recovery cokemaking facilities use higher temperature ovens which destroy volatile organics, and they do not recover any by-products.

In by-product recovery coke plants, wastewater such as waste ammonia liquor is generated from moisture contained in the coal charge to the coke ovens, and some wastewater is generated from the by-product recovery operations. The non-recovery coke plants, on the other hand, do not generate process wastewater other than boiler blowdown and process storm water, which are typically disposed of by coke quenching.

The 1982 regulation segmented by-product recovery cokemaking into "iron and steel" and "merchant" coke plants. "Iron and steel" cokemaking was defined at 420.11(d) and "merchant" cokemaking was defined at 420.11(c). The term "iron and steel" means those by-product recovery cokemaking operations other than merchant cokemaking operations. "Merchant" means those by-product recovery cokemaking operations which provide more than fifty percent of the coke produced to operations, industries, or processes other than iron making blast furnaces associated with steel production. The proposed subdivision was created to reflect different wastewater volume generation rates between coke plants located at integrated steel plants and at merchant coke plants.

In December 2000, EPA proposed to combine the iron and steel and merchant cokemaking segments into a single segment: by-product recovery cokemaking. EPA proposed this change because its analyses showed that wastewater generation and characteristics, and pollution prevention and wastewater treatment technology effectiveness for the two segments were similar. In 1982, EPA determined that the model flow rates for "iron and steel" coke plants and merchant coke plants, including control water, were 153 gpt and 170 gpt, respectively. However, EPA did not observe these differences in wastewater generation rates when analyzing the current survey data.

Comments opposed EPA's proposal to drop the segmentation on the basis of "iron and steel" and "merchant" coke plants based on economic considerations. However, the comments agreed with EPA's assessment that production process and wastewaters characteristics and flow rates from merchant coke plants are similar to those from the integrated "iron and steel" facilities. The Agency evaluated potential economic differences between "merchant" and "iron and steel" facilities and found no substantial differences in profitability or other factors which might affect economic achievability, although some difference in facility size was observed. This facility size was not significant and not considered adequate for subcategorization. (See DCN IS11044 of Section 15.1.4, and DCN IS10362 of Section 14.1, of the Administrative Record.)

Consequently, for the cokemaking subcategory, today's rule combines the "iron and steel" and "merchant" segments into a newly-created "by-product recovery" cokemaking segment for most regulatory purposes, although EPA is retaining the "iron and steel" and "merchant" segments for purposes of reflecting the existing BPT limitations. EPA concluded

that this was appropriate because the production processes, wastewater characteristics, wastewater flow rates, and economic impacts from all by-product recovery cokemaking operations, including merchant facilities, are similar.

The non-recovery cokemaking segment includes non-recovery cokemaking processes that have either existed for many years or are currently emerging in the industry. Other than low-volume boiler blowdown and process area storm water, non-recovery cokemaking processes do not generate wastewater like the by-product recovery processes do. This major difference in wastewater flow necessitated the segmentation of this subcategory.

6.3.2 Proposed Subpart B: Ironmaking

In ironmaking, blast furnaces are used to produce molten iron, which makes up about two-thirds of the charge to basic oxygen steelmaking furnaces. The raw materials charged to the top of the blast furnace include coke, limestone, refined iron ores, and sinter. Preheated air is blown into the bottom of the furnace and exits the furnace top as blast furnace gas in enclosed piping. The off-gas is cleaned and cooled in a combination of dry dust catchers and high-energy venturi scrubbers. Direct contact water used in the gas coolers and high-energy scrubbers comprises nearly all of the wastewater from ironmaking blast furnace operations.

Sinter plants upgrade the iron content of ores and recover iron from a mixture of wastewater treatment sludges, mill scale from integrated steel mills, and fine coke particles (also known as coke breeze) from cokemaking operations. In sinter plants, the iron source mixture is combined with limestone and charged to a furnace. Sinter of suitable size and weight is formed for charging to the blast furnace. Wastewaters are generated from wet air pollution control devices on the wind box and discharge ends of the sinter furnace. No process wastewater is generated by dry air pollution control systems.

The 1982 regulation distinguished sintering and blast furnace operations as two separate subcategories, sintering and ironmaking, respectively. In 2000, EPA proposed to combine these two subcategories together into a single "ironmaking" subcategory. EPA proposed this change because survey responses indicated that facilities with both operations generate wastewater with similar characteristics and tended to co-mingle these wastewaters before treatment[1]. However, EPA concluded that it was still appropriate to distinguish between the two in terms of model system flow rates and manufacturing process, and proposed to divide the ironmaking subcategory into the sintering and blast furnace segments. The Agency proposed to further divide the sintering segment due to differences in wastewater generation, as discussed below.

Sinter facilities use two types of air pollution control systems to treat air emissions from sinter plants: wet and dry. Sinter plants that operate dry air pollution controls do

[1]An exception is that EPA found dioxins and furans in wastestreams from sinter operations with wet air pollution control systems and in blast furnace wastewaters cotreated with sintering wastewaters. No measurable dioxins and furans were found in treated blast furnace wastewater only.

not generate process wastewater. Data from the surveys indicate that approximately a third of these plants employ dry air pollution controls. EPA proposed to establish a segment for sintering plants with dry air pollution control and designate the discharge requirements to be zero discharge of pollutants.

In response to comments received on the proposal, EPA generally concluded it was not appropriate to revise the existing limitations and standards for the proposed ironmaking subcategory (with the exception of codifying an ammonia waiver). Consequently, EPA is similarly retaining the existing subcategorization structure for sintering and ironmaking. However, EPA did not receive any comments opposing the segmentation of sintering on the basis of air pollution control systems. Therefore, the final rule creates two segments the sintering subcategory: dry air pollution control and wet air pollution control.

6.3.3 Proposed Subpart C: Integrated Steelmaking

The 1982 iron and steel regulation included separate subcategories for steelmaking, vacuum degassing, continuous casting, and hot forming. In 2000, EPA proposed a revised subcategorization structure that recognized the differences between integrated and non-integrated steelmaking facilities. The Agency proposed segregating steelmaking operations at integrated plants and non-integrated plants to simplify the structure of the regulation and because different wastewater generation rates were observed between integrated and non-integrated plants. This proposed structure included combining certain operations at integrated facilities from the existing steelmaking, vacuum degassing, and continuous casting operations into an "integrated steelmaking subcategory." The following provides a general description of each of these operations.

BOFs are one of two types of furnaces used in steelmaking in the United States[2]. They are typically used for high tonnage production of carbon steels at integrated mills. Integrated steel mills use BOFs to refine a metallic charge consisting of approximately two-thirds molten iron and one-third steel scrap. Facilities use three types of air pollution control systems to treat furnace off-gases from BOF steelmaking operations: semi-wet air pollution controls, wet-open combustion air pollution controls, and wet-suppressed combustion air pollution controls. Each type of air pollution control system operates in a different manner and generates different wastewater flow rates. However, the wastewater characteristics are similar. Twenty-four BOF shops are operated at 20 integrated steel plants and one non-integrated steel plant. Of the 24 BOF shops, eight use semi-wet air pollution control systems, eight use wet-open combustion air pollution control systems, seven use wet-suppressed combustion air pollution control systems, and one uses a combination wet-open/wet-suppressed combustion air pollution control system.

Vacuum degassing is a batch process where molten steel is subjected to a vacuum for composition control, temperature control, deoxidation, degassing, decarburization, and the removal of impurities from the steel. Oxygen and hydrogen are the principal gases removed

[2]The other type is an electric arc furnace (EAF), which is typically used to produce low-tonnage carbon, alloy, and stainless steels at non-integrated mills.

from the steel. In most degassing systems, the vacuum is provided by barometric condensers; thus, direct contact between the gases and the barometric water occurs.

Likewise, ladle metallurgy is also a batch process where molten steel is refined in addition to, or in place of, vacuum degassing. These operations include argon bubbling, argon-oxygen decarburization (AOD), electroslag remelting (ESR), and lance injection. These additional refining operations do not generate any process water.

Casting is generally a continuous process where molten steel is shaped while cooling into semi-finished shapes after the vacuum degassing and/or ladle metallurgy processes. The continuous casting machine includes a receiving vessel for molten steel, water-cooled molds, secondary cooling water sprays, containment rolls, oxygen-acetylene torches for cutoff, and a runout table. Wastewater is generated by a direct contact water system used for spray cooling and for flume flushing to transport scale from below the caster runout table. The other main casting operation type is ingot casting, in which molten steel is poured into ingot molds.

Under the proposed structure, wastewaters from basic oxygen furnace operations were included with wastewaters from vacuum degassing operations and continuous casting operations to make up the "integrated steelmaking subcategory." Hot forming operations that took place either at integrated mills or were not associated directly with steelmaking operations were to be covered by the "integrated and stand-alone hot forming subcategory." Wastewaters from electric arc furnaces were included with wastewaters from vacuum degassing operations, continuous casting operations and hot forming operations to make up the "non-integrated steelmaking and hot forming subcategory." This proposed subcategory is discussed in more detail in Section 6.3.5 below.

After considering comments to the proposal and conducting a thorough re-evaluation of the costs, pollutant reductions, and economic achievability of the proposed subcategorization structure, EPA, for the most part, is not promulgating new effluent limitations guidelines and standards for the proposed "integrated steelmaking subcategory." (EPA is promulgating a provision for one segment whereby permit writers or pretreatment control authorities can establish alternative limitations on a best professional judgement basis.) Therefore, EPA is not adopting the proposed subcategorization structure. Changing the subcategorization structure only made sense when EPA believed it would promulgate new limits and standards for the new subcategory. Consequently, this final rule maintains the current subcategorization structure in regards to steelmaking, vacuum degassing, and continuous casting.

However, EPA is revising the segments of the 1982 steelmaking subcategory so that they cover the following operations:

- Electric arc furnace steelmaking - semi-wet;
- BOF steelmaking - wet-suppressed combustion (retained);

- BOF steelmaking - wet-open combustion, and electric arc furnace steelmaking-wet; and

- BOF steelmaking - semi-wet.

6.3.4 Proposed Subpart D: Integrated and Stand-Alone Hot Forming

Hot forming is a process that heats ingots, blooms, billets, slabs, or rounds to rolling temperatures so that the products will form under mechanical pressure into semi-finished shapes for further hot or cold rolling or as finished shapes. Process water is used for scale breaking, flume flushing, and direct contact cooling.

Integrated and stand-alone hot forming operations include hot forming processes at integrated steel plants and stand-alone hot forming mills. Four different types of hot forming mills are operated at integrated and stand-alone facilities: flat mills (hot strip and sheet mills and plate mills), primary mills (slabbing and blooming mills), section mills (bar and rod mills), and hot formed pipe and tube mills. The existing regulation segregates the hot forming subcategory into four different segments based on differences in flow rates: primary mills, section mills, flat mills, and pipe and tube mills.

The proposed integrated and stand-alone hot forming subcategory includes hot forming processes that takes place at integrated mills or at locations that were not associated directly with steelmaking operations (stand-alone hot forming mills). EPA proposed two segments, carbon and alloy steel and stainless steel, for this subcategory because of differences in pollutants present in the wastewater and because facilities typically combine these types of wastewaters together for treatment.

However, for today's final rule, EPA has not adopted limits and standards for the proposed "integrated and stand-alone hot forming subcategory." Therefore, EPA is not adopting the proposed subcategorization structure. Changing the subcategorization structure only made sense when EPA believed it would promulgate new limits and standards for the new subcategory. Consequently, the final rule maintains the existing hot forming subcategory.

6.3.5 Proposed Subpart E: Non-Integrated Steelmaking and Hot Forming

As explained in Section 6.3.3 above, in 2000, EPA proposed a revised subcategorization structure that recognized the differences between integrated and non-integrated steelmaking facilities. The Agency proposed segregating steelmaking operations at integrated plants and non-integrated plants to simplify the structure of the regulation and because different wastewater generation rates were observed between integrated and non-integrated plants. This proposed structure included combining certain operations at non-integrated facilities from the existing steelmaking, vacuum degassing, continuous casting, and hot forming subcategories into a "non-integrated steelmaking and hot forming subcategory." The following provides a general description of non-integrated steelmaking. Section 6.6.3 provides descriptions of the other operations included in this subcategory.

Non-integrated steelmaking in this proposed subcategory is achieved with the use of electric arc furnaces (EAF). EAFs melt and refine a metallic charge of scrap steel to produce low tonnage carbon, alloy, and stainless steels at non-integrated mills. In addition, most mills operate EAFs with dry air cleaning systems, which produce no process wastewater discharges. There are a small number of wet and semi-wet systems.

Departing from the structure of the 1982 regulation, EPA proposed the non-integrated steelmaking and hot forming subcategory as a means to simplify the regulatory structure by grouping the basic steelmaking (electric arc furnace, vacuum degassing, and continuous casting) and forming operations performed at non-integrated plants under one subcategory. EPA proposed to combine these operations into one subcategory because of similar wastewater pollutant characteristics and the potential for cotreatment of these wastewaters. Substantially lower wastewater flow rates are demonstrated at non-integrated facilities, due to their lower water application rates, use of high-rate water recycle systems, and good water management practices.

As in the integrated and stand-alone hot forming subcategory, EPA proposed two segments, carbon and alloy steel and stainless steel, in this subcategory due to differences in wastewater pollutant characteristics. The Agency believed this approach would be helpful in simplifying the existing regulation was appropriate because of the similar wastewater characteristics, demonstrated flows, and treatment systems applied at these mills. For additional details of the proposed subcategorization structure and rational, see Section 6 of the Development Document for the Proposed Iron and Steel Manufacturing Point Source Category, EPA 831-B-00-011, December 2000.

For today's final rule, EPA has not adopted limits and standards for the proposed "non-integrated steelmaking and hot forming subcategory." Therefore, EPA is not adopting the proposed subcategorization structure. Changing the subcategorization structure only made sense when EPA believed it would promulgate new limits and standards for the new subcategory. Consequently, the final rule maintains the existing subcategorization structure in regards to steelmaking, vacuum degassing, and continuous casting.

6.3.6 Proposed Subpart F: Steel Finishing

Since extensive cotreatment of steel finishing wastewaters is currently practiced by the industry, the Agency proposed to simplify the regulatory structure for steel finishing operations by combining them into a single subcategory, steel finishing, because of the compatibility of wastewaters for treatment. The proposed steel finishing subcategory included salt bath and ESS descaling, acid pickling, cold forming, alkaline cleaning, continuous annealing, hot coating, and electroplating at integrated, non-integrated, and stand-alone facilities. EPA proposed to divide this subcategory into carbon and alloy steel and stainless steel segments to reflect variations in the wastewater pollutant characteristics and flow rates. The following provides a general description of the operations included in the proposed steel finishing subcategory and additional information on the proposed structure and EPA's rational is located in

Section 6 of the Development Document for the Proposed Iron and Steel Manufacturing Point Source Category, EPA 831-B-00-011, December 2000.

Salt bath descaling is the oxidizing and reducing using molten salt baths to remove heavy scale from specialty and high-alloy steels. Process wastewaters originate from quenching and rinsing operations conducted after processing in the molten salt baths. Electrolytic sodium sulfate (ESS) descaling is performed on stainless steels for essentially the same purposes as salt bath descaling.

Acid pickling is the use of acid solutions of various acids to remove oxide scale from the surfaces of semi-finished products prior to further processing by cold rolling, cold drawing, and subsequent cleaning and coating operations. Process wastewaters include spent pickling acids, rinse waters, and pickling line fume scrubber water.

Cold forming is the shaping of metal products conducted on hot rolled and pickled steels at ambient temperatures to impart desired mechanical and surface properties in the steel. Process wastewater characteristics result from using synthetic or animal-fat based rolling solutions, many of which are proprietary.

Hot coating is a process where pre-cleaned steel is immersed into baths of molten metal. Hot coating is typically used to improve resistance to corrosion, and for some products, to improve appearance and ability to hold paint. Wastewaters result principally from cleaning operations prior to the molten bath.

For today's final rule, EPA has not adopted limits and standards for the proposed "steel finishing subcategory." Therefore, EPA is not adopting the proposed subcategorization structure. Changing the subcategorization structure only made sense when EPA believed it would promulgate new limits and standards for the new subcategory. Consequently, the final rule maintains the existing subcategorization structure in regards to salt bath descaling, acid pickling, cold forming, alkaline cleaning, and hot coating.

6.3.7 Proposed Subpart G: Other Operations

In 2000, EPA proposed to create a new subcategory, the "other operations subcategory," which included the following operations: direct-reduced ironmaking, forging, and briquetting. These manufacturing operations are not covered by the existing rule, but are directly related to iron and steel production and are performed at iron and steel sites.

The direct-reduced ironmaking (DRI) process produces relatively pure iron by reducing iron ore in a furnace below the melting point of the iron produced. DRI is used as a substitute for scrap steel in the non-integrated steelmaking process to minimize contaminant levels in the melted steel and to allow economic steel production when market prices for scrap are high. Process wastewaters are generated from air pollution control devices, but contain insignificant toxic pollutants.

The briquetting process of agglomeration forms materials into discrete shapes of sufficient size, strength, and weight so that the material can serve as feed for subsequent processes. Briquetting does not generate process wastewater.

Forging is a hot forming operation in which a metal piece is shaped by hammering or by processing in a hydraulic press. Process wastewaters are generated from direct contact cooling water, but contain insignificant toxic pollutants.

As explained in its proposal, the Agency determined that it was appropriate to segment this subcategory on the basis of manufacturing operation. Therefore, the Agency proposed to segment the subcategory into DRI, forging and briquetting.

The Agency received no comments on the proposed subcategorization structure and determined it was appropriate to establish limits for this subcategory. Consequently, the final rule includes this additional subcategory for "other operations."

Table 6-1

Subcategory Comparison of the 1982 and Proposed Regulations

<table>
<tr><th>1982 Regulation</th><th colspan="2">Proposed Regulation</th></tr>
<tr><td>A. Cokemaking</td><td colspan="2">A. Cokemaking</td></tr>
<tr><td>B. Sintering</td><td colspan="2" rowspan="2">B. Ironmaking</td></tr>
<tr><td>C. Ironmaking</td></tr>
<tr><td>D. Steelmaking</td><td rowspan="3">C. Integrated Steelmaking</td><td rowspan="4">E. Non-Integrated Steelmaking and Hot Forming</td></tr>
<tr><td>E. Vacuum Degassing</td></tr>
<tr><td>F. Continuous Casting</td></tr>
<tr><td>G. Hot Forming</td><td>D. Integrated and Stand-Alone Hot Forming</td></tr>
<tr><td>H. Salt Bath Descaling</td><td colspan="2" rowspan="5">F. Steel Finishing</td></tr>
<tr><td>I. Acid Pickling</td></tr>
<tr><td>J. Cold Forming</td></tr>
<tr><td>K. Alkaline Cleaning</td></tr>
<tr><td>L. Hot Coating</td></tr>
<tr><td></td><td colspan="2">G. Other Operations</td></tr>
</table>

Table 6-2

Final Subcategorization

Subcategory		Segment	Manufacturing Process
A	Cokemaking	By-Product Recovery	---
		Non-Recovery	---
B	Sintering	Dry Air Pollution Control	---
		Wet Air Pollution Control	---
C	Ironmaking	Iron Blast Furnace	---
D	Steelmaking	Basic Oxygen Furnace	Semi-Wet
			Wet-Suppressed Combustion
			Wet-Open Combustion
		Electric Arc Furnace	Semi-Wet
			Wet
E	Vacuum Degassing	---	---
F	Continuous Casting	---	---
G	Hot Forming	Primary	Carbon and Specialty Mills Without Scarfers
			Carbon and Specialty Mills With Scarfers
		Section	Carbon Mills
			Specialty Mills
		Flat	Hot Strip and Sheet Mills
			Carbon Plate Mills
			Specialty Plate Mills
		Pipe & Tube Mills	---

Table 6-2 (Continued)

Subcategory		Segment	Manufacturing Process
H	Salt Bath Descaling	Oxidizing	Batch: Sheet, Plate
			Batch: Rod, Wire, Bar
			Batch: Pipe, Tube
			Continuous
		Reducing	Batch
			Continuous
I	Acid Pickling	Sulfuric Acid	Rod, Wire, Coil
			Bar, Billet, Bloom
			Strip, Sheet, Plate
			Pipe, Tube, Other
			Fume Scrubber
		Hydrochloric Acid	Rod, Wire, Coil
			Strip, Sheet, Plate
			Pipe, Tube, Other
			Fume Scrubber
			Acid Regeneration
		Combination Acid	Rod, Wire, Coil
			Bar, Billet, Bloom
			Strip, Sheet, Plate - Continuous
			Strip, Sheet, Plate - Batch
			Pipe, Tube, Other
			Fume Scrubber

Table 6-2 (Continued)

Subcategory		Segment	Manufacturing Process
J	Cold Forming	Cold Rolling	Recirculation: Single Stand
			Recirculation: Multi Stand
			Combination
			Direct Application: Single Stand
			Direct Application: Multi Stand
		Cold Worked Pipe & Tube	Water Solutions
			Oil Solutions
K	Alkaline Cleaning	Batch	---
		Continuous	---
L	Hot Coating	Galvanizing, Terne and Other Metal Coatings	Strip, Sheet, and Miscellaneous Products
			Wire Products and Fasteners
		Fume Scrubbers	---
M	Other Operations	Direct Iron Reduction	---
		Forging	---
		Briquetting	---

SECTION 7

WASTEWATER CHARACTERIZATION

This section presents information on water use and wastewater generation practices associated with iron and steel manufacturing operations, identifies pollutants of concern (POCs), and presents untreated process wastewater characterization data for the POCs. Section 7.1 presents water use, wastewater sources, wastewater generation rates, and wastewater discharge practices for the seven operations that EPA had proposed as subcategories. (Although EPA did not adopt a new subcategorization scheme as proposed, EPA is using that structure in this section to facilitate comparison to the proposal.) Section 7.2 describes EPA's methodology for selecting POCs and identifies the POCs that EPA had considered for each proposed subcategory and segment. Section 7.3 presents untreated process wastewater characterization data collected during EPA's sampling program for the POCs, to the extent that it does not disclose confidential business information. Section 7.4 presents references used in this section.

7.1 Water Use and Wastewater Generation and Discharge

The principal uses of process water by iron and steel manufacturing processes include cooling and cleaning of process off-gases, direct cooling of coke and slag, direct cooling and cleaning of steel, product rinsing, process solution makeup, and direct cooling of process equipment. Most of the water used by the iron and steel industry is for non-contact cooling of processing equipment. Water is also used for steam and power generation.

Process wastewaters are any wastewaters that come into direct contact with the process, product, by-products, or raw materials for the manufacturing of iron and steel. Process wastewaters also include wastewater from slag quenching, equipment cleaning, air pollution control devices, rinse water, and contaminated cooling water. Sanitary wastewater and storm water are not considered process wastewaters. Non-contact cooling wastewaters are cooling waters that do not directly contact the processes, products, by-products, or raw materials; these wastewaters are not considered process wastewaters. Non-process wastewaters are those generated by non-process operations such as utility wastewaters (water treatment residuals, boiler blowdown, air pollution control wastewaters from heat recovery equipment, and water generated from co-generation facilities), treated or untreated wastewaters from ground water remediation systems, dewatering water for building foundations, and other wastewater streams not associated with production processes.

In this section, the term wastewater discharge flow rates refers to the volume of wastewater that is generated and then discharged by individual process operations; the wastewater discharge flow rate does not include the volume of wastewater that is recycled back to the process. For example, many iron and steel operations such as hot forming include high-rate recycle water systems where the vast majority of water is recirculated, while the relatively small blowdown stream is routed to wastewater treatment. In this example, the blowdown stream comprises the wastewater discharged from this process. EPA provides the wastewater discharge flow rates in this section for several reasons. First, because the rule is mass-based,

both the wastewater discharge rate and the effluent concentration are important components to determine compliance. Second, wastewater discharge flow rates provide information to permit writers to better understand water use and discharge practices by the iron and steel industry, and to iron and steel site personnel to identify opportunities for water conservation at their facilities.

This document generally presents wastewater flow ranges and medians based on the data reported by the iron and steel industry in response to the industry survey. EPA analyzed the reported flow rates to determine process water flows at each site and used these data to calculate ranges and medians. EPA identified and resolved discrepancies in reported process water flows wherever possible by performing water flow balances from all data reported in the questionnaire and by contacting site personnel. EPA presents median flow rates in this section instead of mean flow rates because the median better represents typical operation of water systems because the median is not influenced as much as the mean by extremely high flow rates. Presenting median flow rates also allows EPA to reveal as much information as possible without compromising confidential business information.

The following subsections further describe process water use, process wastewater sources, and process wastewater discharge flow rates for each proposed iron and steel subcategory. Non-contact cooling water, sanitary water, storm water, and non-process waters are not further discussed. Table 7-1 provides EPA's estimates for the annual process wastewater discharge rate by operation and discharge type (direct or indirect) and the number of zero or alternative dischargers for each operation. The estimates provided below are based on data collected in the U.S. EPA Collection of 1997 Iron and Steel Industry Data (EPA Survey).

7.1.1 Cokemaking Operations

The cokemaking subcategory covers the by-product recovery and non-recovery cokemaking segments. The water use and wastewater generation sources for cokemaking operations are described below.

Water Use

Both types of cokemaking operations use large volumes of water for coke quenching; the water application rates required for quenching are balanced between the need to quench the incandescent coke, and the need to leave enough heat in the coke to evaporate water trapped within it. Water used for coke quenching is typically plant service water (i.e., the plant's water supply), non-contact cooling water, or treated coke plant wastewater. The Agency does not advocate quenching coke with untreated wastewater because of the potential for air pollution and ground water contamination associated with this practice. To the Agency's knowledge, coke quenching with untreated process wastewaters is no longer practiced at any of the coke plants that responded to the industry survey. Since all U.S. coke plants recycle and evaporate coke quench water, a minimum amount of wastewater is generated from coke quenching operations. Excess coke quenching water is a reported wastewater source at two by-product recovery plants. Standard industry practice is to recycle coke quenching water to extinction; adequate controls can eliminate process wastewater discharges from coke quenching.

Several by-product recovery cokemaking facilities also use plant service water for wet air pollution control (WAPC) of cokemaking processes such as larry coal car charging, coke pushing, by-product recovery, and coke handling, crushing, and blending. WAPC water is typically recirculated. Other water uses in the by-product recovery cokemaking process include coke oven gas cooling and steam heating.

Process Wastewater Sources for By-Product Recovery Cokemaking

By-product recovery cokemaking operations generate wastewater from a number of sources. The greatest volume of wastewater generated at by-product recovery plants is waste ammonia liquor. Ammonia liquor is used to scrub coke oven gas to condense tars and moisture and is recycled at a high rate. Excess or waste ammonia liquor, comprising coal moisture and volatile compounds released from the coal during the coking process, is removed and sent to treatment. Waste ammonia liquor has high concentrations of ammonia, cyanide, sulfide, benzene, and phenols (Reference 7-1). Waste ammonia liquor flow rates reported in response to the survey range from 26 gallons per ton (gpt) to 270 gpt, with a median flow rate of 69 gpt. These flow rates are higher than would be expected based on a conservation of mass analysis of coal moisture and a comparison to the values reported for the 1982 rulemaking effort. Therefore, EPA concludes that the reported flow rates include a combination of wastewaters from other sources. Section 13.3.1 describes waste ammonia liquor flow rates in more detail and provides the basis of EPA's conclusion that a representative waste ammonia liquor flow rate is approximately 36 gpt.

Nearly all by-product recovery plants reported one or more other sources of wastewater, which are commingled with excess ammonia liquor for subsequent treatment. These wastewater sources include the following:

- Coke oven gas desulfurization;
- Crude light oil recovery;
- Ammonia still operation;
- Coke oven gas condensates;
- Final gas coolers;
- Barometric condensers;
- National emission standards for hazardous air pollutants (NESHAP) controls for benzene;
- WAPC devices; and
- Other miscellaneous process wastewater.

Below are detailed descriptions of these wastewater sources and wastewater discharge flow rates as reported in response to the industry survey. Note that, although the reported flow rates represent the sites' best estimates of source-specific discharge flow rates, EPA identified inconsistencies in reported wastewater discharge flow rate data from coke plants that EPA could not resolve. The data reported herein reflect what was reported by the industry in the questionnaires.

Approximately 40 percent of by-product recovery plants reported operating coke oven gas desulfurization systems that generate process wastewater. Desulfurization wastewater is composed of condensed moisture in the gas stream, and wastewater discharge flow rates reported in response to the survey range from <1 gpt to 55 gpt, with a median discharge flow rate of 13 gpt.

Approximately 70 percent of by-product recovery plants reported generating wastewater from crude light oil recovery operations. Distillates from the wash oil still and subsequent separation equipment are condensed and decanted to recover oil by-products. Condensates removed from product decanters comprise the crude light oil recovery wastewater stream. Wastewater discharge flow rates vary depending on the degree of separation and recovery (crude or refined), and the extent of wastewater recirculation. Reported wastewater discharge flow rates range from approximately 3 gpt to 71 gpt, with a median discharge flow rate of 20 gpt.

Steam used for operation of ammonia stills condenses and adds to the volume of the still effluent. The volume of steam can be minimized through use of heat exchangers on the still effluent. Most ammonia stills are operated with caustic addition for pH control, while some are operated with lime or soda ash. Solutions of these chemicals also add to the discharge flow. Twelve sites reported wastewater flow from the ammonia stills; reported wastewater discharge flow rates range from 0.03 gpt to 87 gpt, with a median discharge flow rate of 9 gpt.

Coke oven gas condensates are generated by a variety of gas cooling and by-product recovery operations. While some sites reported coke oven gas condensates as a component of their reported wastewater ammonia liquor discharge flow rates, or as specific by-product recovery discharge flow rates, others reported coke oven gas condensate discharge flow rates separately. Reported coke oven gas condensate discharge flow rates ranged from <1 gpt to 15 gpt, with a median discharge flow rate of 1.5 gpt.

Final gas coolers generate wastewater from direct contact cooling coke oven gas with water sprays that dissolve any remaining soluble gas components and physically flush out condensed naphthalene crystals. Only one of the surveyed by-product recovery plants specifically reported final gas cooler discharge flow rates separately from other reported wastewater flow rates (e.g., waste ammonia liquor or coke oven gas condensates). This plant reported a final cooler blowdown rate of 12 gpt. EPA estimates that typical final cooler wastewater volumes range from 2 gpt to 12 gpt based on wastewater discharge flow data collected from this site and from data collected for development of the 1982 regulation (Reference 7-1).

Some plants use vacuum crystallizers to form and remove ammonia sulfate crystals. Barometric condensers are used to create a vacuum in the crystallizer systems, which results in the generation of condensate wastewater. None of the surveyed by-product recovery plants specifically reported barometric condenser discharge flow rates separately from other reported wastewater flow rates; however, approximately 60 percent of by-product recovery plants reported recovery of ammonium sulfate. Two plants reported generating ammonia recovery wastewater, and one plant reported generating blowdown from the saturator/crystallizer, which may or may not include barometric condenser wastewater. EPA estimates that typical barometric condenser wastewater volumes range from 1 gpt to 18 gpt based on wastewater discharge flow data collected from these sites and data collected for development of the 1982 regulation (Reference 7-1).

Approximately 20 percent of by-product recovery plants reported generating wastewater from NESHAP control systems for benzene emissions at by-product recovery plants. NESHAP controls are site-specific and are designed to minimize emissions during cokemaking and by-product recovery. An example of a NESHAP control system that generates wastewater is water seals on storage and process tanks, although most plants use gas blanketing. Reported NESHAP wastewater discharge flow rates cannot be disclosed to prevent compromising confidential business information.

Approximately 50 percent of by-product recovery plants reported generating wastewater from WAPC devices used to control emissions from operations such as coal charging, coke pushing, by-product recovery, and coal drying. Wastewater from WAPC devices may contain high concentrations of suspended solids (Reference 7-1). WAPC water is typically recirculated, with the system blowdown comprising the wastewater stream. Standard industry practice is to dispose of WAPC wastewater from coal charging and coke pushing by coke quenching. The Agency supports this practice because these types of WAPC wastewater do not contain volatile pollutants found in waste ammonia liquor and other untreated wastewaters and would not result in transfer of these pollutants to the atmosphere. Reported coke pushing WAPC wastewater discharge flow rates ranged from 1.2 gpt to 119 gpt, with a median discharge flow rate of 27 gpt (the flow rates include water being used for coke quenching). Relatively few by-product recovery plants perform WAPC of emissions from by-product recovery and coal drying; WAPC wastewaters generated by these operations are routed to wastewater treatment.

Approximately 40 percent of by-product recovery plants reported generating miscellaneous wastewaters. Reported wastewater sources were site-specific and discharge flow rates ranged from <1 gpt to 72 gpt, with a median discharge flow rate of 12 gpt. Examples of reported wastewater sources include: ovens basement, furnace condensate, tar storage drainage, coal yard drainage, exhauster and flare stack seals, floor drains, drip legs, and lab sink waste. In addition to these sources, approximately 25 percent of plants reported generating small volumes (<1 gpt) of equipment cleaning and washdown water. Many sites have improved their collection of miscellaneous wastewaters since the promulgation of the 1982 regulation. The Agency believes that collecting and treating these wastewaters prior to discharge is necessary to ensure compliance with the regulation.

In summary, by-product recovery cokemaking plants generate process wastewater from a variety of sources. Reported total plant process wastewater discharge flow rates ranged from 55 gpt to 281 gpt, with a median discharge flow rate of 118 gpt. These reported flow rates include the process wastewater sources described above, but exclude other wastewater sources that may be commingled with process wastewater for treatment, such as contaminated ground water, control water for subsequent biological treatment, WAPC water suitable for coke quenching, and cooling tower blowdown. WAPC water used for coke quenching is also not included in the discharge flow rate.

Process Wastewater Sources for Non-Recovery Cokemaking

Non-recovery cokemaking operations do not generate process wastewater. Process area storm water and boiler blowdown, which are typically disposed of by coke quenching at non-recovery facilities, are not considered process waters. In addition, EPA does not consider wastewater associated with waste heat recovery and reuse from co-generation facilities, such as WAPC wastewater, boiler blowdown and cooling tower blowdown to be process wastewater subject to this rule.

7.1.2 Sintering and Ironmaking Operations

Separate discussions are provided below for sintering and blast furnace ironmaking segments of the proposed ironmaking subcategory. In the final rule, these operations continue to be regulated in separate subcategories.

Sintering

The sintering process primarily uses water to add to the sinter mix to attain the desired moisture content. The typical water source is plant service water, which is also used by most plants as makeup water for WAPC of sintering processes such as the sintering stand windbox and material processing. Other water uses are site-specific and include sinter cooling, belt sprays, and equipment cleaning and washdown.

The primary wastewater source for sintering operations is WAPC system wastewater. Seven sites reported in their survey response that they used WAPC systems to control air emissions from the sintering process, while two sites used dry air pollution control (DAPC) systems. WAPC wastewater is recirculated, and the system blowdown is discharged. All of the sinter plants generating process wastewater reported using wet scrubbers to control wind box emissions, and some sites also reported using scrubbers to control emissions at the discharge end of the sinter strand. Reported WAPC wastewater discharge flow rates ranged from 0 gpt to 452 gpt, with a median discharge flow rate of 73 gpt. Sites that use dry air pollution control do not generate process wastewater.

Facilities identified other sources of sintering wastewater in the industry surveys, including sinter cooling water, belt sprays, and equipment cleaning water. EPA believes that

these miscellaneous wastewaters are discharged with the WAPC blowdown because the survey respondents did not provide flow rate data for these sources.

Blast Furnace Ironmaking

Blast furnace ironmaking primarily uses water in wet gas cleaning and cooling systems designed to clean and cool the furnace off-gas prior to its use as a fuel in the blast furnace stoves. Water is recirculated at a high rate. Other water uses include water addition to adjust the moisture content of the burden, slag quenching, and gas seals. Source water may be provided by plant service water, but often consists of treated blast furnace wastewater, other process wastewater, slag quench wastewater, or gas seal wastewater.

Blowdown from the high-energy scrubbers and gas coolers is the primary wastewater from blast furnace ironmaking. Reported gas cleaning system wastewater discharge flow rates ranged from 1.5 gpt to 2,182 gpt, with a median discharge flow rate of 15 gpt. Blast furnace gas seal wastewater is also a significant wastewater source; however, common industry practice is to reuse blast furnace gas seal wastewater as makeup for the gas cleaning system. Among survey respondents that reported separate gas seal wastewater discharge flow rates, flow rates ranged from <1 gpt to 156 gpt, with a median discharge flow rate of 15 gpt.

Pump seals, blast furnace drip legs, equipment cleaning water, and excess slag quenching wastewater are other, relatively minor sources of process wastewater. Common industry practice is to reuse these wastewater streams as makeup for the gas cleaning system.

Five sites achieve zero discharge and five sites achieve reduced discharge of blast furnace wastewater by using all or a portion of the gas cleaning blowdown for slag quenching. One additional site achieves zero discharge by discharging gas cleaning blowdown to one unlined and one synthetically lined pond where the wastewater infiltrates and evaporates. The Agency does not advocate using untreated gas cleaning blowdown for slag quenching in unlined slag pits because of the potential for ground water contamination and air pollution associated with this practice.

7.1.3 Integrated Steelmaking Operations

Separate discussions are provided below for the following manufacturing processes within the integrated steelmaking subcategory that EPA had proposed: basic oxygen furnace steelmaking, ladle metallurgy, vacuum degassing, and continuous casting.

Six of 20 integrated steelmaking sites operate combined wastewater treatment and/or recycle systems for vacuum degassing, continuous casting, and/or hot forming operations. The common characteristics of the process wastewater from each of these operations allow the sites to commingle and treat the wastewater simultaneously.

Basic Oxygen Furnace (BOF) Steelmaking

The primary use of water and primary source of wastewater in BOF steelmaking are air pollution control systems designed to treat furnace off-gases prior to release into the atmosphere. Each BOF shop uses one of three types of WAPC systems: semi-wet, wet-suppressed combustion, or wet-open combustion (one shop uses a combination of WAPC systems). Semi-wet systems apply water to the furnace off-gases to partially cool and condition the off-gases prior to particulate removal in an electrostatic precipitator. Both wet-suppressed and wet-open systems use wet scrubbers for gas cooling and conditioning and for particulate removal. Wet-suppressed systems are high-energy wet scrubbing systems that limit excess air entering the furnace mouth, minimizing carbon monoxide combustion and thus minimizing the volume of gas requiring treatment. Wet-open systems are gas cleaning systems that admit excess air to allow the combustion of carbon monoxide prior to high-energy scrubbing. Plant service water is the predominant water source for all three system types. Other minor wastewater sources are site-specific and include excess slag quench water, hood cooling water losses, cooling tower blowdown, and equipment cleaning water.

EPA analyzed BOF steelmaking wastewater discharge flow rates based on the type of WAPC system used because of differences in water recycle rates and wastewater discharge rates. Eight of the 24 BOF shops active in 1997 operated semi-wet air pollution control systems. Reported wastewater discharge flow rates ranged from 0 gpt to 124 gpt, with a median discharge flow rate of 22 gpt. Wastewater is generally not recirculated. Two BOF shops reported zero discharge of process wastewater, while two additional BOF sites reported discharge rates of <6 gpt. Sites achieve zero or relatively low discharges from semi-wet systems by balancing the applied water with water that evaporates in the conditioning process. Although the 1982 regulation designates semi-wet air pollution control as zero discharge (Reference 7-1), currently not all of the sites are able to achieve this discharge status because of safety considerations and because the level of control required to attain zero discharge is difficult to maintain at all times. Some sites operate their semi-wet systems with excess water, which is subsequently discharged, to flush the air pollution control ductwork and prevent the buildup of debris within the ductwork. If this wet debris accumulates, it has the potential to fall back into the BOF, causing explosions and process upsets. The Agency recognizes the benefits of using excess water in these systems.

Seven BOF shops operate wet-suppressed combustion air pollution control systems. All of the shops recirculate air pollution control wastewater at a high rate. Reported wastewater discharge flow rates ranged from 14 gpt to 97 gpt, with a median discharge flow rate of 34 gpt. Five of these BOF shops use carbon dioxide injection in the high-rate recycle system to reduce wastewater blowdown requirements. Carbon dioxide injection allows carbonates to precipitate in the treatment system clarifiers (in effect water softening), thus minimizing the need for blowdown from the system.

Eight BOF shops (at seven sites) operate wet-open combustion air pollution control systems. All of the shops recirculate air pollution control wastewater at a high rate. Reported wastewater discharge flow rates ranged from 0 gpt to 201 gpt, with a median discharge

flow rate of 95 gpt. One shop achieves zero discharge of process wastewater by using carbon dioxide injection, which eliminates the need for system blowdown because 100 percent of the water is recirculated. Two additional shops achieve wastewater discharge flow rates less than the median rate by using carbon dioxide injection to reduce system blowdown requirements.

Ladle Metallurgy

None of the estimated 103 sites that conduct ladle metallurgy operations reported generating or discharging process wastewater from these operations. Water is used and discharged by vacuum degassers that often operate as part of ladle metallurgy stations. Water use and wastewater discharge by vacuum degassing is discussed below.

Vacuum Degassing

The vacuum generating system is the primary use of water and primary source of wastewater in vacuum degassing systems. Steam ejectors create a vacuum in vacuum degassing systems; condensate wastewater is generated from this process. Molten steel exhaust comes in contact with the injected steam, thereby contaminating the condensate wastewater. Wastewater is recirculated at a high rate; blowdown is the vacuum degassing wastewater stream. Makeup water for the system is generally plant service water. Reported wastewater discharge flow rates ranged from 0 gpt to 735 gpt, with a median discharge flow rate of 44 gpt. No other sources of wastewater were reported.

Continuous Casting

The primary use of water and primary source of wastewater in continuous casting are direct contact spray cooling (secondary cooling) of the partially solidified product as it exits the mold to produce a solid product. (Primary cooling and equipment cooling are non-contact cooling systems, which are not discussed in this section.) As the cast product surface oxidizes, scale is washed away by the cooling water. The spray water also becomes contaminated with oils and greases that are released by hydraulic and lubrication systems. Wastewater is recirculated at a high rate; blowdown comprises the continuous casting wastewater stream. Makeup water for the system is generally plant service water; however, some sites also use non-contact cooling water or treated process wastewater. Reported continuous caster wastewater discharge flow rates ranged from 1 gpt to 1,836 gpt, with a median discharge flow rate of 35 gpt.

Another use of water and source of wastewater is flume flushing. As the cast product is placed on the run-out tables for final cooling, additional scale flakes off and drops beneath the tables. Some sites sluice this scale to the spray cooling water pit. Reported flume flushing wastewater discharge rates cannot be disclosed to prevent compromising confidential business information. Other minor wastewater sources were site-specific and include equipment cleaning water, torch table wastewater, and granulator water.

Non-process wastewater sources often treated with process wastewater include low-volume losses from closed caster mold and machine cooling water systems.

7.1.4 Integrated and Stand-Alone Hot Forming Operations

EPA identified contact water systems used for scale removal, roll and machinery cooling, product cooling, flume flushing, and other miscellaneous uses during the hot forming process as the primary use of water and primary wastewater source. EPA uses contact water systems as a generic term because there are many different sources of contact water within a hot forming mill. Sites may have multiple hot forming contact water systems.

Certain contact wastewaters are common to all hot forming operations, regardless of mill type (i.e., primary, section, flat, and pipe and tube). When the hot steel product is being rolled, iron oxide scale forms on the surface of the hot steel. The scale is removed by direct contact high-pressure sprays (gauge pressure of approximately 1,000 - 2,000 pounds per square inch) that release water before each roll pass of the product. Low-pressure spray cooling water is used to prevent the mill stand rolls and the table rolls from overheating as the hot steel passes over or in between them. Scale removal and cooling wastewater are discharged beneath the rolling mill to trenches called flumes. Sites sluice this scale (flume flushing wastewater) to the scale pits.

Hot strip mills use large quantities of direct contact water, referred to as laminar flow, to cool the strip on the run-out table after it has been rolled on the final mill finishing stands. Laminar flow is a method in which a nonturbulent water flow is applied over the entire surface of the strip to effect uniform surface cooling and to prevent strip distortion. This water is relatively clean and is often recycled because of its large volume. In addition, low-pressure spray is also applied at the downcoiler to allow proper strip coiling.

Makeup water for contact water systems is generally plant service water; however, many sites also use non-contact cooling water or treated process wastewater. At most facilities that discharge direct contact wastewater (30 of 38), wastewater is recirculated at a high rate, and system blowdown is the resulting wastewater stream requiring treatment. However, some mills operate multiple contact water systems (e.g., nonlaminar and laminar cooling) and not all systems are recirculating. In addition, some facilities operate multiple hot forming mills, but not all mills recirculate contact wastewater. Other miscellaneous, low-volume wastewater sources reported by a significant number of facilities include wastewater collected in basement sumps, roll shop wastewater, and equipment cleaning and washdown wastewater. The range of and median wastewater discharge flow rates for wastewaters generated by hot forming operations at integrated and stand-alone hot forming sites are listed below.

Wastewater Source	Range of Discharge Flow Rates (gpt)	Median Discharge Flow Rate (gpt)
Contact wastewater	0 to 17,299	231
Basement sumps	0 to 108	4
Roll shop wastewater	0 to 21	0.01
Equipment cleaning and washdown wastewater	0 to 76	<0.5

Scarfer emissions control wastewater is generated by a minority of facilities that operate wet scarfer emissions control. Only a portion of mills perform scarfing, and the majority of these mills either do not control scarfer emissions or operate dry emissions control. Exhaust gases from scarfers contain metal fumes comprising mainly iron oxides and the alloying elements of the steel. Because gases are saturated when exiting the scarfer hood, one of three wet emissions control systems is generally used: wet precipitator (intermittent spray wash), wet precipitator (continuous wash), and high energy venturi scrubber. Only two facilities specifically reported generating scarfer WAPC wastewater; both discharge flow rates were <10 gpt.

Finally, additional hot forming operations performed by some mills that generate contact cooling wastewater include hydraulic edging, hot shearing, die cooling, scarfer cooling, and saw cooling. EPA believes that these wastewaters are discharged with contact cooling wastewater because the survey respondents did not provide flow rate data for these sources.

7.1.5 Non-Integrated Steelmaking and Hot Forming Operations

The proposed non-integrated steelmaking and hot forming subcategory included two segments, carbon and alloy steel and stainless steel, because of differences in pollutants present in the wastewaters. EPA did not find discernable differences in water use practices, wastewater sources, and wastewater discharge flow rates between the segments; therefore, this discussion does not distinguish between the two segments. However, separate discussions are provided below for the following manufacturing processes within the subcategory: electric arc furnace (EAF) steelmaking, ladle metallurgy, vacuum degassing, continuous casting, and hot forming.

Approximately 67 percent of sites operate recycle systems specific to one type of operation. The remaining 33 percent of sites operate treatment and/or recycle systems for combined wastewater site operations, including vacuum degassing, continuous casting, and hot forming. The common characteristics of the process wastewater from each of these operations allows the sites to commingle and treat their wastewater simultaneously.

Electric Arc Furnace (EAF) Steelmaking

The Agency evaluated data from 69 survey respondents that reported that they performed non-integrated steelmaking operations. The analysis included a total of 76 EAF shops

and 132 EAFs. All EAFs in the United States are equipped with dry or semi-wet air pollution controls, and none discharge process wastewater. (One EAF shop has a wet scrubber system that functions as a backup.) Dry systems clean furnace off-gases without adding water to the gas cleaning system. Semi-wet systems apply water to the furnace off-gases to partially cool and condition the off-gases prior to particulate removal in an electrostatic precipitator. Sites achieve zero wastewater discharge from semi-wet systems by balancing the applied water with water that evaporates in the conditioning process. Non-contact cooling water is the predominant water source; however, some facilities use treated process water and plant service water. Wastewater is not recirculated.

Ladle Metallurgy

None of the 83 sites that perform ladle metallurgy and/or secondary steelmaking reported generating or discharging process wastewater from these operations. Water is used and discharged by vacuum degassers that often operate as part of ladle metallurgy stations. Water use and wastewater discharge by vacuum degassing is discussed below.

Vacuum Degassing

The vacuum generating system is the primary use of water and primary source of wastewater in vacuum degassing systems. Steam ejectors create a vacuum in the vacuum degassing systems; condensate wastewater is generated from this process. Molten steel exhaust comes in contact with the injected steam, thereby contaminating the condensate wastewater. Wastewater is recirculated at a high rate, and blowdown is the vacuum degassing wastewater stream. Sources of makeup water for the recirculation system include non-contact cooling water, plant service water, and treated or untreated process wastewater. Reported wastewater discharge flow rates ranged from 0 gpt to 116 gpt, with a median discharge flow rate of 19 gpt. The only other reported wastewater sources were boiler blowdown, cooling water leaks/spills, and mold cleaning water; each of these sources were reported by a single facility.

Continuous Casting

The primary use of water and primary source of wastewater in continuous casting are direct contact spray cooling (secondary cooling) of the partially solidified product as it exits the mold to produce a solid product. (Primary cooling and equipment cooling are non-contact cooling systems, which are not discussed in this section.) As the cast product surface oxidizes, scale is washed away by the cooling water. The spray water also becomes contaminated with oils and greases that are released by hydraulic and lubrication systems. Wastewater is recirculated at a high rate, and blowdown is the continuous casting wastewater stream. Sources of makeup water for the recirculation system include non-contact cooling water, plant service water, ground water, and treated or untreated process wastewater. Reported continuous caster wastewater discharge flow rates ranged from 0 gpt to 603 gpt, with a median discharge flow rate of 18 gpt.

Four sites reported generating equipment cleaning and washdown wastewater. Wastewater discharge rates for this source were <0.5 gpt. No additional process wastewater

sources were reported. Non-process wastewater sources often treated with process wastewater include losses from closed caster mold and machine cooling water systems.

Hot Forming

EPA identified contact water systems used for scale removal, roll and machinery cooling, product cooling, flume flushing, and other miscellaneous uses during the hot forming process as the primary use of water and primary wastewater source. EPA uses contact water systems as a generic term because there are many different sources of contact water within a hot forming mill. Sites may have multiple hot forming contact water systems. Section 7.1.4 describes water use and wastewater sources for hot forming operations in detail. Reported contact wastewater discharge flow rates ranged from 0 gpt to 11,644 gpt, with a median discharge flow rate of 39 gpt. Discharge flow rates for other common wastewater sources, including basement sumps, roll shop, equipment cleaning and washdown, and scarfer cooling and emissions control cannot be disclosed because it would compromise confidential business information.

Additional reported wastewater sources were site-specific, often generated by only one facility. Examples include lubricating, hot saw, and rail head hardening. Reported flow rates are not disclosed to prevent compromising confidential business information.

Non-process wastewater from hot forming operations that is treated with process wastewater includes non-contact cooling water from reheat furnaces, which is sometimes included in the process water recycle loop or recycled separately with a blowdown to the process water loop.

7.1.6 Steel Finishing Operations

The steel finishing subcategory, as proposed by EPA, included two segments, carbon and alloy steel and stainless steel, because of differences in pollutants present in the wastewaters. EPA also identified several manufacturing process divisions between the proposed segments. Separate discussions are provided below for the following manufacturing processes: acid pickling, cold forming, alkaline cleaning, stand-alone continuous annealing, hot coating, and electroplating.

Acid Pickling

For this analysis, EPA defines acid pickling as also including alkaline cleaning and salt bath and electrolytic sodium sulfate (ESS) descaling operations when performed on a line that includes acid pickling. In a small number of instances, continuous annealing operations with an associated water quench take place on acid pickling lines. In these instances, EPA considered discharge from the annealing rinse as a wastewater from acid pickling lines.

EPA identified three major uses of water and sources of wastewater from acid pickling lines: rinse water, pickle liquor, and WAPC devices. Rinse water comprises the largest

volume of wastewater from acid pickling lines to wastewater treatment. Multiple rinse tanks operated in series are used to clean the acid solution that carries over from acid pickling operations. Some sites operate countercurrent cascade rinsing whereby rinse water flows from one tank to another in the direction opposite of the product flow. Fresh water is added to the rinse tank located farthest from the pickling tanks. Although countercurrent cascade rinsing can reduce water use significantly, some sites operate once-through rinsing systems to maintain product quality.

Pickling is often performed in multiple tanks operated in series whereby acid solution cascades from the last tank to the first. Fresh acid and makeup water are added to the first pickling tank, and spent pickle liquor from the final pickling tank is blowdown. Spent pickle liquor is composed primarily of acid that is no longer an effective pickling agent. Spent pickle liquor may be regenerated on site, contract hauled off site, or discharged to wastewater treatment.

WAPC devices are located on acid pickling lines and at acid regeneration plants. Approximately 50 percent of WAPC systems recirculate wastewater, while 50 percent use once-through wastewater.

The range of and median wastewater discharge flow rates for selected wastewaters generated by acid pickling operations of strip and sheet (the predominant products) are listed below.

Wastewater Source	Range of Discharge Flow Rates (gpt)	Median Discharge Flow Rate (gpt)
Carbon and Alloy Strip/Sheet - Hydrochloric Acid		
Pickling rinse wastewater	0 to 1,374	63
Pickling solution wastewater	0 to 870	6
WAPC	0 to 809	14
Carbon and Alloy Strip/Sheet - Sulfuric Acid		
Pickling rinse wastewater	0 to 310	7
Pickling solution wastewater	0 to 24	8
WAPC wastewater	6 to 343	108
Stainless Strip/Sheet		
Pickling rinse wastewater	0 to 8,172	258
Pickling solution wastewater	0 to 1,704	3
WAPC wastewater	0 to 11,507	97

Other minor sources of wastewater reported by sites include process wastewater from other operations on the acid pickling lines (e.g., spent process baths and rinses from salt bath descaling); raw material handling, preparation, and storage; tank clean-outs; wet looping pits; equipment cleaning water; sumps; and pump seals. Except for blowdown from surface cleaning tanks, these wastewater sources are noncontinuous with minimal contribution to the total wastewater flow.

The Agency identified six sites that have acid pickling wastewaters contract hauled; these sites do not discharge acid pickling wastewater.

Cold Forming

The primary use of water in cold forming operations is in the contact spray water and rolling solution systems, and the primary cold forming wastewater is the blowdown from these systems. For purposes of analyzing wastewater flow rates, the Agency made no distinction between contact spray water systems and rolling solution systems, which can include blowdown from roll and/or roll table spray cooling and product cooling. Other reported sources of wastewater include equipment cleaning water, wastewater from roll shops, and basement sumps. The range of and median wastewater discharge flow rates for wastewaters generated by cold forming operations are listed below.

Wastewater Source	Range of Discharge Flow Rates (gpt)	Median Discharge Flow Rate (gpt)
Carbon and Alloy		
Multiple stand, combination	3 to 319	115
Multiple stand, direct application	0 to 5,856	199
Carbon and Alloy (continued)		
Multiple stand, recirculation	0 to 1,237	14
Single stand, direct application	0 to 360	2
Single stand, recirculation	0 to 76	7
Stainless		
Multiple stand, recirculation	0 to 30	11
Single stand, direct application	Not disclosed to prevent compromising confidential business information	Not disclosed to prevent compromising confidential business information
Single stand, recirculation	0 to 82	5

Some carbon and alloy cold forming operations achieve zero discharge from their recycle system(s) through either contract hauling or discharge to other processes, such as acid pickling, casting, hot forming, vacuum degassing, and other cold forming operations.

Alkaline Cleaning

For this analysis, EPA defines alkaline cleaning operations as also including annealing operations performed on the same line. As a result, this segment includes both stand-alone alkaline cleaning lines and continuous annealing/alkaline cleaning lines.

The primary uses of water and primary sources of wastewater identified for alkaline cleaning operations are blowdown from the alkaline cleaning solution tanks and rinse water used to clean the alkaline cleaning solution from the steel. The range of and median wastewater discharge flow rates for solution blowdown and rinse wastewaters generated by alkaline cleaning of strip and sheet (the predominant products) are listed below.

Wastewater Source	Range of Discharge Flow Rates (gpt)	Median Discharge Flow Rate (gpt)
Carbon and Alloy Steel, Strip/Sheet		
Cleaning solution blowdown	0 to 1,118	3
Cleaning rinse wastewater	0 to 2,271	162
Stainless Steel, Strip/Sheet		
Cleaning solution blowdown	0.3 to 3,566	18
Cleaning rinse wastewater	39 to 15,082	2,257

Other reported minor sources of wastewater include: rinse water from annealing operations (when operated with a water quench), brush scrubbing, tank clean-outs, roll shop, and equipment cleaning and washdown water.

Continuous Annealing

For this analysis, EPA defines continuous annealing operations as those continuous annealing operations not on the same process line with other operations such as alkaline cleaning or acid pickling (i.e., stand-alone continuous annealing operations). Stand-alone continuous annealing operations are divided into two categories: lines that do not use water to quench the steel after the annealing process, and lines that do. Continuous annealing lines that operate without a water quench do not generate process wastewater. Sites with continuous annealing lines that operate with a water quench reported discharge flow rates ranging from <1 gpt to 672 gpt, with a median discharge flow rate of 21 gpt. A few quenching sites also reported generating small volumes of solution blowdown (<1 gpt).

Hot Coating

For this analysis, EPA defines hot coating as also including acid cleaning, annealing, alkaline cleaning, and other surface cleaning and preparation operations performed on the same line as a hot coating operation. Hot coating operations are performed on carbon and alloy steels only. The primary use of water and primary source of wastewater from hot coating operations are surface preparation operations, such as acid and alkaline cleaning, that the steel undergoes before hot coating. Twenty-four sites operate a total of 40 hot coating lines. Four of these operations reported a discharge from their hot coating tanks, but did not provide any flow data. Thirty-nine of the operations have a rinse following the coating operation. Rinse wastewater discharge flow rates ranged from 0 gpt to 4,044 gpt, with a median discharge flow rate of 182 gpt. Tank clean-outs, fume scrubbers, and equipment cleaning are other sources of wastewater reported by several sites.

Two of the lines reported operating without a discharge via contract hauling of process wastewater.

Electroplating

For this analysis, EPA defines electroplating lines as also including annealing, alkaline cleaning, acid cleaning, and other surface cleaning and surface preparation operations on the same line. Twenty-two sites reported performing electroplating on a total of 42 lines.

The primary uses of water and primary sources of wastewater from electroplating operations are acid and alkaline cleaning operations performed on the same process line, which generate solution blowdown and rinse wastewater. Wastewater discharge flow rates for electroplating operations vary by the type of metal applied and the product type. Some sites operate countercurrent cascade rinsing and other flow reduction techniques to conserve water; however, other sites require once-through rinsing to ensure product quality. At these sites, thorough rinsing after acid cleaning is critical for proper adhesion of the plating. The range and median wastewater discharge flow rates by metal type for these wastewater streams are listed below. Wastewater discharge flow rates for plate electroplating are not disclosed to prevent compromising confidential business information.

Wastewater Source	Range of Discharge Flow Rates (gpt)	Median Discharge Flow Rate (gpt)
Chrome/Tin Electroplating		
Cleaning solution blowdown	0 to 8,938	1.5
Cleaning rinse wastewater	0 to 54,444	154
Other Metals Electroplating		
Cleaning solution blowdown	0 to 74,691	5.3
Cleaning rinse wastewater	0 to 1,554	26

Other minor wastewater sources reported by several sites include electroplating solution blowdown and rinse water, plating solution losses, fume scrubbers, tank clean-outs, equipment cleaning, and spills/leaks.

7.1.7 Other Operations

The Other Operations Subcategory includes segments for direct-reduced ironmaking, forging, and briquetting.

Direct-Reduced Ironmaking (DRI)

Three DRI plants provided industry survey data. One plant was operated at a non-integrated site and two were operated as stand-alone DRI sites. WAPC systems, used to control furnace emissions and emissions from material handling and storage, are the primary reported use of water and primary source of wastewater for DRI operations. All three sites recirculate WAPC wastewater. WAPC wastewater discharge flow rates ranged from 0 gpt to 64 gpt, with a median discharge flow rate of 2.2 gpt.

Forging

Contact water is the primary use of water and primary source of process wastewater from forging operations. Contact water is used for flume flushing, descaling, die spray cooling, and product quenching. Forging wastewater sources and generation are very similar to those for hot forming; Section 7.1.5 describes water use and wastewater sources for hot forming operations in detail. Reported forging contact wastewater discharge flow rates ranged from 0 gpt to 1,110 gpt, with a median wastewater discharge flow rate of 117 gpt.

Other minor wastewater sources reported include hydraulic system wastewater, equipment cleaning water, and basements sumps.

Briquetting

The Agency found that briquetting operations do not generate or discharge process wastewater.

7.2 Identification of Pollutants of Concern (POCs)

This section presents the approach used for identifying POCs and lists the POCs that EPA considered for this rulemaking. EPA presents this information using the subcategories as proposed. Memoranda describing the POC identification in more detail and the data used to identify the POCs are located in the Iron and Steel Administrative Record (Section 5.4, DCN IS05030 and Section 14.3, DCN IS10616). EPA used the POCs for each subcategory to screen pollutants for possible regulation; Section 12 describes the selection of regulated pollutants for each subcategory from the list of POCs. EPA also used the POCs to calculate pollutant loadings and removals and to perform an environmental assessment for each subcategory.

To identify POCs, EPA used analytical data for over 300 analytes collected during sampling episodes conducted by EPA at 18 iron and steel facilities; in addition, EPA used analytical data from 2 dioxins/furans sampling episodes to confirm the presence of dioxins/furans in sintering wastewater. Section 3 provides more details on EPA's sampling program, the analytical methods used, and the individual analytes analyzed for during the sampling episodes. In general, EPA analyzed wastewater samples for conventional pollutants (pH, total suspended solids, and biochemical oxygen demand), bulk nonconventional pollutants, volatile and semivolatile organic pollutants, metals, and dioxins and furans. The list of pollutants analyzed for each subcategory depended on the types of pollutants EPA expected to find in wastewater discharged from operations in the subcategory; pollutants not analyzed for a particular subcategory are noted in the subcategory-specific subsections below.

EPA used the following general criteria for selecting POCs for each subcategory:

- EPA considered three pollutants as POCs for all manufacturing processes: total suspended solids (TSS), oil and grease measured as hexane extractable material (HEM), and total petroleum hydrocarbons measured as silica gel treated-hexane extractable material (SGT-HEM). These pollutants are important wastewater characteristics and are important indicators of wastewater treatment system performance in many applications in the steel industry.

- EPA did not evaluate pH as a candidate POC since pH is not expressed in terms of quantity or concentration. However, the pH level is an important wastewater characteristic and an important indicator of wastewater treatment system performance in many applications in the steel industry.

- Except where specifically noted, EPA excluded the following pollutants from consideration as POCs for all manufacturing processes because they are either dissolved substances or common elements found in wastewater: total dissolved solids (TDS), calcium, chloride, sodium, total sulfide, and sulfate.

In addition to the general criteria listed above, EPA used the following methodology to identify POCs. First, EPA eliminated from consideration all pollutants not detected in untreated wastewater samples from specific manufacturing processes during EPA's 18 sampling episodes. Table 7-2 presents the list of 147 pollutants that were not detected in any manufacturing-process-specific untreated wastewater samples. For the remaining pollutants, EPA reviewed its data from untreated wastewater samples from individual manufacturing processes to identify pollutants present in wastewaters from each process. EPA identified POCs for each manufacturing process using the following criteria:

- The pollutant was detected at greater than or equal to 10 times the minimum level (ML, also referred to as baseline value (see Section 4)) concentration in at least 10 percent of all untreated process wastewater

samples. This criterium ensures that the pollutant was present at treatable concentrations at sites where EPA evaluated treatment performance.

- The mean detected concentration in untreated process wastewater samples was greater than the mean detected concentration in source water samples. This criterium ensures that pollutants are generated by the manufacturing process rather than merely reflecting background pollutant concentrations.

Using the criteria above, EPA developed segment- and/or operation-level POC lists for each of the seven subcategories. The following subsections present tables that list the POCs for each subcategory/segment. The following subsections also present tables for each subcategory listing the pollutants that were detected in at least one untreated process wastewater sample, but failed the POC for the subcategory. These additional tables, together with Table 7-2 and the POC tables document the status of all the pollutants analyzed in untreated process wastewater samples for each subcategory.

Note that while EPA evaluated POCs based on an assessment of untreated process wastewater data at the subcategory, segment, or operational level, certain tables provided in this section represent assessments at the subcategory level only in order to be concise. As a result, certain information presented in the subcategory-level tables may appear contradictory. For example, for the steel finishing subcategory, mercury is shown in Table 7-16 as both not detected and as detected, but not greater than 10 times the minimum level in at least 10 percent of samples. In this case, mercury was not detected in any untreated wastewater samples for certain steel finishing operations, but was detected at low levels in other steel finishing operations. See the memoranda describing the POC identification located in the Iron and Steel Administrative Record (Section 5.4, DCN IS05030 and Section 14.3, DCN IS10616) for detailed information presented by subcategory/segment/operation.

7.2.1 Cokemaking Subcategory

The cokemaking subcategory is divided into two segments: by-product recovery and non-recovery. EPA did not identify POCs for the non-recovery segment because non-recovery cokemaking operations do not generate process wastewater. The identification of POCs for the by-product segment is discussed below.

EPA reviewed untreated wastewater data from four by-product cokemaking facilities (a total of 4 sampling points and 16 samples) to identify POCs for the by-product segment of the cokemaking subcategory. EPA did not analyze by-product cokemaking wastewater samples for hexavalent chromium because EPA did not expect this pollutant to be present at treatable concentrations in cokemaking wastewaters. Table 7-3 presents pollutants that were detected in iron and steel untreated process wastewater, but not identified as POCs for this subcategory.

Table 7-4 lists the POCs identified for this segment. EPA identified 68 POCs using the criteria presented in Section 7.2; in addition, EPA selected total Kjeldahl nitrogen (TKN), weak acid dissociable (WAD) cyanide, thiocyanate, and nitrate/nitrite as POCs.

TKN, WAD cyanide, and thiocyanate could not be evaluated using the criteria presented in Section 7.2 because no minimum levels are specified for these analyses. EPA selected these three pollutants as POCs because they are widely present in cokemaking wastewater (each was detected in 100 percent of EPA's cokemaking untreated wastewater samples). Nitrate/nitrite failed the screening criteria in Section 7.2 because the mean detected concentration of nitrate/nitrite was greater in source water samples than in untreated wastewater samples. However, EPA selected nitrate/nitrite as a POC because it is an important indicator of biological treatment effectiveness.

7.2.2 Ironmaking Subcategory

The proposed ironmaking subcategory was divided into the following two segments: sintering and blast furnace ironmaking. Because the characteristics of sintering and blast furnace ironmaking wastewater are different, EPA identified different POCs for the two proposed segments. The POCs for each segment are discussed below. EPA did not analyze sintering and blast furnace ironmaking wastewater samples for biochemical oxygen demand and hexavalent chromium because EPA did not expect these pollutants to be present at treatable concentrations in ironmaking wastewaters. Table 7-5 presents pollutants that were detected in iron and steel untreated process wastewater, but not identified as POCs for this subcategory.

Sintering

EPA reviewed untreated wastewater data from two sintering facilities (a total of 2 sampling points and 10 samples) to identify POCs for sintering. Table 7-6 lists the POCs identified for this segment. EPA identified 62 POCs using the criteria presented in Section 7.2. In addition, EPA selected TKN, WAD cyanide, and thiocyanate as POCs.

TKN, WAD cyanide, and thiocyanate could not be evaluated using the criteria presented in Section 7.2 because no minimum levels are specified for these analyses. EPA selected these three pollutants as POCs because they are widely present in sintering wastewater (each was detected in 100 percent of EPA's sintering untreated wastewater samples).

Dioxins and furans were detected during the two sampling episodes conducted by EPA. To confirm that dioxins and furans are present in sintering wastewaters, EPA collected additional sampling data in collaboration with the American Iron and Steel Institute. These data, while not included in this POC analysis, further characterized the presence and amount of dioxins and furans in sintering wastewater and confirmed EPA's data.

Blast Furnace Ironmaking

EPA reviewed untreated wastewater data from three blast furnace ironmaking facilities (a total of 4 sampling points and 20 samples) to identify POCs for blast furnace ironmaking. Table 7-7 lists the POCs identified for this segment. EPA identified 24 POCs using the criteria presented in Section 7.2; in addition, EPA selected TKN, WAD cyanide, and thiocyanate as POCs.

TKN, WAD cyanide, and thiocyanate could not be evaluated using the criteria presented in Section 7.2 because no minimum levels are specified for these analyses. EPA selected these three pollutants as POCs because they are widely present in blast furnace wastewater (each was detected in at least 60 percent of EPA's blast furnace ironmaking untreated wastewater samples).

7.2.3 Integrated Steelmaking Subcategory

The proposed integrated steelmaking subcategory included the following manufacturing processes that generate process wastewater: basic oxygen furnace (BOF) steelmaking, vacuum degassing, and continuous casting. Because wastewaters from these three manufacturing processes are commonly cotreated, the list of POCs for this subcategory includes all pollutants identified as POCs for any of the three manufacturing processes. EPA did not analyze steelmaking wastewater samples for biochemical oxygen demand, total organic carbon, total sulfide, cyanide, thiocyanate, and hexavalent chromium because EPA did not expect these pollutants to be present at treatable concentrations in steelmaking wastewaters. Table 7-8 presents pollutants that were detected in iron and steel untreated process wastewater, but not identified as POCs for this subcategory.

EPA identified a total of 28 POCs for this subcategory. The POCs for each specific manufacturing process are discussed below; Table 7-9 lists the POCs identified for the proposed integrated steelmaking subcategory and for each manufacturing process.

EPA reviewed untreated steelmaking wastewater data from three BOF steelmaking facilities (a total of 7 sampling points and 28 samples) to identify POCs for BOF steelmaking operations. EPA identified 28 POCs using the criteria presented in Section 7.2.

EPA reviewed untreated vacuum degassing wastewater data from two BOF steelmaking facilities performing vacuum degassing (a total of two sampling points and six samples) to identify POCs for vacuum degassing operations. EPA identified 15 POCs using the criteria presented in Section 7.2.

EPA reviewed untreated continuous casting wastewater data from three BOF steelmaking facilities performing continuous casting (a total of 3 sampling points and 14 samples) to identify POCs for continuous casting operations. EPA identified 12 POCs using the criteria presented in Section 7.2; in addition, EPA selected lead as a POC. Lead failed the screening criteria in Section 7.2 because the mean detected concentration of lead was not greater

than 10 times the minimum level. However, EPA selected lead as a POC because industry-supplied effluent data indicate that lead was detected in 129 of the 262 samples (49 percent) from integrated continuous casting operations. In addition, EPA selected lead as a POC for continuous casting operations because it is regulated under the 1982 regulation (Reference 7-1) and data collected in support of the 1982 regulation indicate it is present in wastewater discharged from continuous casting operations.

7.2.4 Integrated and Stand-Alone Hot Forming Subcategory

The proposed integrated and stand-alone hot forming subcategory was divided into two segments: carbon and alloy steel and stainless steel. Because the characteristics of hot forming wastewater are affected by steel type, EPA identified different POCs for the two segments. The POCs for each segment are discussed below. EPA did not analyze integrated and stand-alone hot forming wastewater samples for dioxins and furans, cyanide, thiocyanate, biochemical oxygen demand, total sulfide, and hexavalent chromium because EPA did not expect these pollutants to be present at treatable concentrations in hot forming wastewaters. Table 7-10 presents pollutants that were detected in iron and steel untreated process wastewater, but not identified as POCs for this subcategory.

Integrated and Stand-Alone Hot Forming - Carbon and Alloy Steel

EPA reviewed untreated wastewater data from two carbon and alloy steel integrated hot forming facilities (a total of 4 sampling points and 15 samples) to identify POCs for hot forming operations. Table 7-11 lists the POCs identified for this segment. EPA identified 10 POCs using the criteria presented in Section 7.2; in addition, EPA selected lead as a POC. Lead failed the screening criteria in Section 7.2 because the mean detected concentration of lead was not greater than 10 times the minimum level. However, EPA selected lead as a POC because industry-supplied effluent data indicate that lead was detected in 38 of the 168 samples (23 percent) from integrated and stand-alone hot forming operations.

Integrated and Stand-Alone Hot Forming - Stainless Steel

EPA did not sample any stainless steel integrated or stand-alone hot forming facilities. EPA did sample stainless steel non-integrated hot forming operations. Since the hot forming processes performed and type of steel formed are identical for the stainless steel segments, EPA transferred the 15 POCs from the non-integrated steelmaking and hot forming subcategory to the integrated and stand-alone hot forming subcategory, stainless steel segment. (see Section 7.2.5 for a discussion of the selection of these POCs). Table 7-12 lists the POCs for this segment.

7.2.5 Non-Integrated Steelmaking and Hot Forming Subcategory

The proposed non-integrated steelmaking and hot forming subcategory was divided into two segments: carbon and alloy steel and stainless steel. Because the characteristics of the steelmaking and hot forming wastewater generated are affected by steel type, EPA

identified different POCs for the two segments. The POCs for each segment are discussed in the following subsections. EPA did not analyze non-integrated steelmaking and hot forming wastewater samples for dioxins and furans, cyanide, thiocyanate, biochemical oxygen demand, and total sulfide because EPA did not expect these pollutants to be present at treatable concentrations in non-integrated steelmaking and hot forming wastewaters. Table 7-13 presents pollutants that were detected in iron and steel untreated wastewater, but not identified as POCs for this subcategory.

Non-Integrated Steelmaking and Hot Forming - Carbon and Alloy Steel

The non-integrated steelmaking and hot forming subcategory, carbon and alloy steel segment included the following manufacturing processes that generate wastewater: vacuum degassing, continuous casting, and hot forming. Because wastewaters from these manufacturing processes are commonly cotreated, the list of POCs for the entire segment includes all pollutants identified as POCs for any of the manufacturing processes. EPA identified a total of 15 POCs for this segment. The POCs for each specific manufacturing process are discussed below; Table 7-14 lists the POCs identified for this segment, and for each manufacturing process.

EPA did not identify POCs for vacuum degassing because EPA did not sample non-integrated vacuum degassing operations during its sampling program. Based on process chemistry and the steel material processed, EPA determined that it is unlikely that wastewater associated with this operation would contain pollutants not identified as POCs in the other manufacturing processes in this segment. POCs identified for continuous casting and hot forming apply to vacuum degassing.

EPA reviewed untreated continuous casting wastewater data from three non-integrated steelmaking facilities performing continuous casting on carbon and alloy steel (a total of three sampling points and three samples) to identify POCs for continuous casting operations. EPA identified 12 POCs using the criteria presented in Section 7.2; in addition, EPA selected lead and zinc as POCs. Lead failed the screening criteria in Section 7.2 because the mean detected concentration of lead was not greater than 10 times the minimum level. Zinc failed because the mean detected concentration of zinc was greater in source water samples than in untreated wastewater samples. However, EPA selected lead and zinc as POCs because industry-supplied effluent data indicate that lead was detected in 65 of the 72 samples (90 percent) and zinc was detected in 70 of the 72 (97 percent) from non-integrated continuous casting operations on carbon and alloy steel. In addition, EPA selected lead and zinc as POCs for continuous casting operations because both pollutants are regulated under the 1982 regulation (Reference 7-1) and data collected in support of the 1982 regulation indicate that these pollutants were present in wastewater discharged from continuous casting operations (no distinction was made between steel type in the 1982 regulation).

EPA reviewed untreated hot forming wastewater data from three non-integrated steelmaking facilities conducting hot forming on carbon and alloy steel (a total of three sampling points and three samples) to identify POCs for hot forming operations. EPA identified 11 POCs using the criteria presented in Section 7.2; in addition, EPA selected lead and zinc as POCs.

Lead failed the screening criteria in Section 7.2 because it was not detected in EPA's sampling program. Zinc failed because the mean detected concentration of zinc was not greater than 10 times the minimum level. EPA selected lead and zinc as POCs because industry-supplied effluent data indicate that lead was detected in 229 of the 237 samples (97 percent) and zinc was detected in 200 of the 237 (84 percent) from non-integrated hot forming operations on carbon and alloy steel.

Non-Integrated Steelmaking and Hot Forming - Stainless Steel

The proposed non-integrated steelmaking and hot forming subcategory, stainless steel segment included the following manufacturing processes that generate wastewater: vacuum degassing, continuous casting, and hot forming. Because wastewaters from these manufacturing processes are commonly cotreated, the list of POCs for the entire segment includes all pollutants identified as POCs for any of the manufacturing processes. EPA identified a total of 22 POCs for this segment. The POCs for each specific manufacturing process are discussed below; Table 7-15 lists the POCs identified for this segment and for each manufacturing process.

EPA did not identify POCs for vacuum degassing because EPA did not sample non-integrated vacuum degassing operations during its sampling program. Based on process chemistry, EPA determined that it is unlikely that wastewater associated with this operation would contain pollutants not identified as POCs in the other manufacturing processes this segment. POCs identified for continuous casting and hot forming apply to vacuum degassing.

EPA reviewed untreated continuous casting wastewater data from two non-integrated steelmaking facilities performing continuous casting of stainless steel (a total of two sampling points and seven samples) to identify POCs for continuous casting operations. EPA identified 19 POCs using the criteria presented in Section 7.2; in addition, EPA selected lead and zinc as POCs. Lead failed the screening criteria in Section 7.2 because it was not detected in EPA's sampling program. Zinc failed because the mean detected concentration of zinc was not greater than 10 times the minimum level. EPA selected lead and zinc as POCs because industry-supplied effluent data indicate that lead was detected in 12 of the 13 samples (92 percent) and zinc was detected in 13 of the 13 samples (100 percent) from non-integrated continuous casting operations on stainless steel. In addition, EPA selected lead and zinc as POCs for continuous casting operations because both pollutants are regulated under the 1982 regulation (Reference 7-1) and data collected in support of the 1982 regulation indicate that these pollutants were present in wastewater discharged from continuous casting operations (no distinction was made between steel type in the 1982 regulation).

EPA reviewed untreated hot forming wastewater data from two non-integrated steelmaking facilities performing hot forming of stainless steel (a total of two sampling points and seven samples) to identify POCs for hot forming operations. EPA identified 15 POCs for hot forming using the criteria presented in Section 7.2.

7.2.6 Steel Finishing Subcategory

The proposed steel finishing subcategory was divided into two segments: carbon and alloy steel and stainless steel. Because the characteristics of the steel finishing wastewater generated are affected by steel type, EPA identified different POCs for the two segments. The POCs for each segment are discussed below. EPA did not analyze steel finishing wastewater samples for dioxins and furans, cyanide, thiocyanate, biochemical oxygen demand, and total sulfide because EPA did not expect these pollutants to be present at treatable concentrations in steel finishing wastewaters. Table 7-16 presents pollutants that were detected in iron and steel untreated wastewater, but not identified as POCs for this subcategory.

Steel Finishing - Carbon and Alloy Steel

The proposed steel finishing subcategory, carbon and alloy steel segment included the following manufacturing processes that generate wastewater: acid pickling, cold forming, alkaline cleaning, stand-alone continuous annealing, hot coating, and electroplating. Because wastewaters from these manufacturing processes are commonly cotreated, the list of POCs for the entire segment includes all pollutants identified as POCs for any of the manufacturing processes. EPA identified a total of 37 POCs for this segment. The POCs for each specific manufacturing process are discussed below; Table 7-17 lists the POCs identified for this segment and for each manufacturing operation.

EPA reviewed untreated wastewater data from four facilities performing acid pickling on carbon and alloy steel (a total of 5 sampling points and 19 samples) to identify POCs for acid pickling operations. EPA identified 18 POCs using the criteria presented in Section 7.2; in addition, EPA selected sulfate as a POC. EPA selected sulfate as a POC because it is present in sulfuric acid pickling wastewater, which EPA did not sample.

EPA reviewed untreated wastewater data from two facilities performing cold forming on carbon and alloy steel (a total of 3 sampling points and 14 samples) to identify POCs for cold forming operations. EPA identified 25 POCs using the criteria presented in Section 7.2; in addition, EPA selected zinc as a POC. Zinc failed the screening criteria in Section 7.2 because the mean detected concentration of zinc in source water was greater than in untreated wastewater. However, EPA selected zinc as a POC because zinc is regulated under the 1982 regulation (Reference 7-1).

EPA reviewed untreated wastewater data from two facilities performing alkaline cleaning on carbon and alloy steel (a total of 4 sampling points and 12 samples) to identify POCs for alkaline cleaning operations. EPA identified 12 POCs for alkaline cleaning using the criteria presented in Section 7.2.

EPA did not identify POCs for stand-alone continuous annealing for carbon and alloy steel because EPA did not sample any annealing quenching operations during its sampling program. However, because quenching is simply a direct-contact water cooling process with no chemicals involved, EPA determined that wastewater associated with this operation is unlikely to

contain pollutants not identified as POCs in other finishing manufacturing process operations. POCs identified for the other finishing processes apply to continuous annealing.

EPA reviewed untreated wastewater data from two facilities performing hot coating on carbon and alloy steel (a total of two sampling points and six samples), including chromium-bearing rinsing operations, to identify POCs for hot coating operations. EPA identified 22 POCs for hot coating using the criteria presented in Section 7.2.

EPA reviewed untreated wastewater data from four facilities performing electroplating on carbon and alloy steel (a total of 6 sampling points and 24 samples) to identify POCs for electroplating operations. The types of electroplating operations sampled include zinc, zinc-nickel, tin (chromium-bearing), and chromium. EPA identified 19 POCs for electroplating using the criteria presented in Section 7.2.

Steel Finishing - Stainless Steel

The proposed steel finishing subcategory, stainless steel segment included the following manufacturing processes that generate wastewater: acid pickling and descaling, cold forming, alkaline cleaning, and stand-alone continuous annealing. Because wastewaters from these manufacturing processes are commonly cotreated, the list of POCs for the entire segment includes all pollutants identified as POCs for any of the manufacturing processes. EPA identified a total of 49 POCs for this segment. The POCs for each specific manufacturing process are discussed below; Table 7-18 lists the POCs identified for this segment and for each manufacturing operation.

EPA reviewed untreated wastewater data from two facilities performing acid pickling, electrolytic sodium sulfate (ESS) descaling, and salt bath descaling on stainless steel (a total of 5 sampling points and 22 samples) to identify POCs for acid pickling and descaling operations. EPA identified 30 POCs for acid pickling and descaling. EPA identified 29 POCs using the criteria presented in Section 7.2; in addition, EPA selected cyanide as a POC. EPA selected cyanide as a POC because it is present in reducing salt bath descaling wastewater (Reference 7-1), which EPA did not sample.

EPA reviewed untreated wastewater data from one facility performing cold forming on stainless steel (a total of 2 sampling points and 10 samples) to identify POCs for cold forming operations. EPA identified 40 POCs for cold forming using the criteria presented in Section 7.2.

EPA reviewed untreated wastewater data from one facility performing alkaline cleaning on stainless steel (a total of one sampling point and five samples) to identify POCs for alkaline cleaning operations. EPA identified 10 POCs for alkaline cleaning using the criteria presented in Section 7.2.

EPA did not identify POCs for stand-alone continuous annealing for stainless steel because EPA did not sample any annealing quenching operations during its sampling

program. However, because quenching is simply a direct-contact water cooling process with no chemicals involved, EPA determined that wastewater associated with this operation is unlikely to contain pollutants not identified as POCs in other finishing manufacturing process operations. POCs identified for the other finishing processes apply to continuous annealing.

7.2.7 Other Operations Subcategory

The other operations subcategory is divided into three segments: direct-reduced ironmaking (DRI), forging, and briquetting. The POCs for each segment are discussed below.

EPA reviewed untreated wastewater data from one facility performing DRI operations (a total of one sample) to identify POCs for DRI operations. EPA did not analyze DRI wastewater samples for dioxins and furans, cyanide, thiocyanate, biochemical oxygen demand, and total sulfide because EPA did not expect these pollutants to be present at treatable concentrations in DRI wastewaters. Table 7-19 presents pollutants that were detected in iron and steel untreated wastewater, but not identified as POCs for this subcategory. EPA identified 10 POCs for the DRI segment using the criteria presented in Section 7.2. Table 7-20 lists the POCs identified for the DRI segment.

Based on an analysis of industry-supplied data, EPA determined that the principal pollutants from forging are TSS and oil and grease. EPA did not identify any specific priority and nonconventional POCs for forging because EPA lacked data for these pollutants.

Briquetting operations do not discharge process wastewater; therefore, EPA did not identify POCs for the briquetting segment.

7.3 Untreated Process Wastewater Characterization Data for Pollutants of Concern

Tables 7-21 through 7-27 present untreated process wastewater characterization data for POCs for each subcategory in the iron and steel industry, to the extent that it does not disclose confidential business information. Data presented in these tables include for each pollutant the number of times analyzed, number of times detected, percentage of samples detected greater than 10 times minimum level, mean concentration of detects, median concentration of detects, detection limit range, and the minimum level. Data from all sampling points representing a particular subcategory were combined to calculate the mean and median detected concentrations. The mean and the median concentrations were calculated for each pollutant using only data from samples where the pollutant was detected; data from samples where the pollutant was not detected were not used to calculate the mean and median concentrations.

As discussed in Section 7.2, POCs were identified based on an assessment performed at the subcategory, segment, or operation level, while the untreated process wastewater characterization data are presented in Tables 7-22 through 7-28 at the subcategory level. EPA chose to present untreated process wastewater characterization data at the

subcategory level to present as much information as possible without compromising confidential business information. As a result, certain information presented in these tables may not appear to meet the criteria for selecting POCs presented in Section 7.2. For example, Table 7-27 for the steel finishing subcategory shows that selenium is detected at concentrations greater than 10 times the minimum level in 3 percent of the samples (compared to 10 percent of samples as specified by the POC selection criteria). In this case, selenium met the POC criteria for a subset of the steel finishing operations shown in Tables 7-17 and 7-18.

7.4 References

7-1 U.S. Environmental Protection Agency. Development Document for Effluent Guidelines and Standards for the Iron and Steel Manufacturing Point Source Category. EPA 440/1-82/024, Washington, DC, May 1982.

Table 7-1

1997 National Estimate of Annual Discharge from Manufacturing Operations by Discharge Type

Manufacturing Operation	Total Number of Sites (a)	Total Annual Discharge Rate (1,000 gallons per year)	Number (%) of Direct Dischargers	Annual Discharge Rate for Direct Dischargers (1,000 gallons per year)	Number (%) of Indirect Dischargers	Annual Discharge Rate for Indirect Dischargers (1,000 gallons per year)	Number (%) of Zero Dischargers (b)
Cokemaking	24	3,031,000	14 (58%)	2,450,000	8 (33%)	581,000	2 (8%)
Sintering	9	2,110,000	4 (44%)	2,110,000	0 (0%) (c)	0 (c)	5 (56%)
Blast furnace ironmaking	20	7,914,000	13 (62%)	7,630,000	1 (5%)	284,000	7 (33%)
BOF steelmaking	20	6,371,110	17 (81%)	6,370,000	1 (5%)	1,110	3 (14%)
EAF steelmaking	96	0 (c)	3 (3%)	0 (c)	2 (2%)	0 (c)	92 (96%)
Vacuum degassing	44	1,270,000	26 (59%)	1,250,000	4 (9%)	20,000	14 (32%)
Ladle metallurgy	103	0 (c)	0 (0%) (c)	0 (c)	0 (0%) (c)	0 (c)	103 (100%)
Continuous Casting	113	10,573,000	53 (47%)	10,100,000	17 (15%)	473,000	43 (38%)
Hot forming	153	140,772,000	87 (57%)	140,000,000	29 (19%)	772,000	39 (25%)
Acid pickling and descaling	69	13,755,000	50 (72%)	13,400,000	14 (20%)	355,000	7 (10%)
Cold forming	103	9,479,600	39 (38%)	9,420,000	16 (16%)	59,600	52 (50%)
Surface cleaning and coating (d)	98	14,519,000	53 (54%)	13,800,000	33 (34%)	719,000	14 (14%)
Briquetting or other agglomeration process	4	0 (c)	0 (0%) (c)	0 (c)	0 (0%) (c)	0 (c)	4 (100%)
Direct-reduced ironmaking	2	119,000	1 (50%)	78,600	1 (50%)	40,500	0 (0%)

Source: U.S. EPA, U.S. EPA Collection of 1997 Iron and Steel Industry Data (Detailed and Short Surveys).

(a) The sum of direct, indirect, and zero dischargers may not equal the total number of operations. Sites may discharge wastewater both directly and indirectly from their manufacturing operations.
(b) Zero dischargers include operations that do not discharge process wastewater (either by 100 percent recycle/reuse or by alternative discharge practices, such as contract hauling or evaporation) and operations that are completely dry.
(c) Cells with a zero (0) indicate that none of the survey respondents have the characteristic; however, it is possible for nonsurveyed facilities to have the characteristic.
(d) Surface cleaning and coating operations include: alkaline cleaning, stand-alone continuous annealing, hot coating, and electroplating.

Table 7-2

Pollutants Not Detected in Untreated Wastewater Samples (a)

Pollutant Name	
Nonconventional Metals	
Cadmium, Dissolved	Cobalt, Dissolved
Silver, Dissolved	Thallium, Dissolved
Tin, Dissolved	Vanadium, Dissolved
Priority Organic Pollutants	
Acrolein	Bis(2-chloroisopropyl) Ether
Bromodichloromethane	Bromomethane
4-Bromophenyl Phenyl Ether	Butyl Benzyl Phthalate
Chlorobenzene	Chloroethane
2-Chloroethylvinyl Ether	Chloromethane
2-Chloronaphthalene	2-Chlorophenol
4-Chlorophenylphenyl Ether	Di-n-butyl Phthalate
1,2-Dichlorobenzene	1,3-Dichlorobenzene
1,4-Dichlorobenzene	3,3'-Dichlorobenzidine
1,1-Dichloroethane	1,1-Dichloroethene
trans-1,2-Dichloroethene	2,4-Dichlorophenol
1,2-Dichloropropane	Diethyl Phthalate
Dimethyl Phthalate	2,4-Dinitrophenol
2,4-Dinitrotoluene	2,6-Dinitrotoluene
Di-n-octyl Phthalate	Di-n-propylnitrosamine
Hexachlorobenzene	Hexachlorobutadiene
Hexachlorocyclopentadiene	Hexachloroethane
Isophorone	2-Methyl-4,6-dinitrophenol
N-Nitrosodimethylamine	Pentachlorophenol
1,1,2,2-Tetrachloroethane	Tetrachloroethene
Tetrachloromethane	1,2,4-Trichlorobenzene

Table 7-2 (Continued)

Pollutant Name	
Priority Organic Pollutants (continued)	
1,1,2-Trichloroethane	2,4,6-Trichlorophenol
Vinyl Chloride	
Nonconventional Organic Pollutants	
o-Anisidine	Aramite
Benzanthrone	1-Bromo-2-chlorobenzene
1-Bromo-3-chlorobenzene	Chloroacetonitrile
p-Chloroaniline	2-Chloro-1,3-butadiene
4-Chloro-2-nitroaniline	1-Chloro-3-nitrobenzene
3-Chloropropene	5-Chloro-o-toluidine
Crotonaldehyde	Crotoxyphos
p-Cymene	2,4-Diaminotoluene
1,2-Dibromo-3-chloropropane	1,2-Dibromoethane
3,5-Dibromo-4-hydroxy-benzonitrile	Dibromomethane
2,3-Dichloroaniline	trans-1,4-Dichloro-2-butene
2,6-Dichloro-4-nitroaniline	2,3-Dichloronitrobenzene
2,6-Dichlorophenol	1,3-Dichloropropane
1,3-Dichloro-2-propanol	cis-1,3-Dichloropropene
1,2:3,4-Diepoxybutane	Diethyl Ether
3,3'-Dimethoxybenzidine	p-Dimethylaminoazobenzene
7,12-Dimethylbenz(a)anthracene	1,4-Dinitrobenzene
Diphenyl Ether	Diphenyldisulfide
Ethyl Cyanide	Ethyl Methacrylate
Ethyl Methanesulfonate	Ethylenethiourea
Hexachloropropene	2-Hexanone
Iodomethane	Isobutyl Alcohol
2-Isopropylnaphthalene	Isosafrole
Longifolene	Malachite Green

Table 7-2 (Continued)

Pollutant Name	
Nonconventional Organic Pollutants (continued)	
Mestranol	Methapyrilene
Methyl Isobutyl Ketone	Methyl Methacrylate
Methyl Methanesulfonate	2-Methylbenzothioazole
3-Methylcholanthrene	4,4'-Methylenebis(2-chloroaniline)
2-Methyl-2-propenenitrile	2-(Methylthio)benzothiazole
1,5-Naphthalenediamine	1,4-Naphthoquinone
2-Nitroaniline	3-Nitroaniline
4-Nitroaniline	4-Nitrobiphenyl
N-Nitrosodi-n-butylamine	N-Nitrosodiethylamine
N-Nitrosomethylethylamine	N-Nitrosomethylphenylamine
N-Nitrosomorpholine	N-Nitrosopiperidine
5-Nitro-o-toluidine	Pentachlorobenzene
Pentachloroethane	Pentamethylbenzene
Phenacetin	Phenothiazine
1-Phenylnaphthalene	Pronamide
2-Propen-1-ol	Safrole
Squalene	1,2,4,5-Tetrachlorobenzene
1,1,1,2-Tetrachloroethane	2,3,4,6-Tetrachlorophenol
Thioacetamide	Thioxanthe-9-one
1,2,3-Trichlorobenzene	Trichlorofluoromethane
2,3,6-Trichlorophenol	2,4,5-Trichlorophenol
1,2,3-Trichloropropane	1,2,3-Trimethoxybenzene
2,4,5-Trimethylaniline	Triphenylene
Tripropyleneglycol Methyl Ether	Vinyl Acetate

(a) Pollutant not detected in any untreated wastewater samples during EPA's 18 iron and steel sampling episodes.

Table 7-3

Pollutants Not Identified as Pollutants of Concern Cokemaking Subcategory - By-Product Recovery Segment (a)

Pollutant	Not Detected (b)	Detected at Low Concentration (c)	Source Water Contaminant (d)	Comments
Conventional Pollutants				
pH		(e)		pH is not selected as a POC for any subcategory
Nonconventional Pollutants, Other (f)				
Chloride				Chloride is not selected as a POC for any subcategory
Sulfate		(e)		Except where noted, sulfate is not selected as a POC for any subcategory
Total Dissolved Solids (TDS)		(e)		TDS is not selected as a POC for any subcategory
Total Sulfide				Total sulfide is not selected as a POC for any subcategory
Priority Metals				
Antimony		✓		
Beryllium		✓	✓	
Cadmium		✓		
Chromium		✓	✓	
Copper		✓		
Lead		✓	✓	
Nickel		✓	✓	
Silver	✓			
Thallium		✓		
Zinc		✓	✓	
Nonconventional Metals				
Aluminum		✓	✓	
Barium		✓	✓	
Calcium		✓	✓	Calcium is not selected as a POC for any subcategory

Table 7-3 (Continued)

Pollutant	Not Detected (b)	Detected at Low Concentration (c)	Source Water Contaminant (d)	Comments
Nonconventional Metals (continued)				
Cobalt		✓	✓	
Iron			✓	
Magnesium		✓	✓	
Manganese		✓	✓	
Molybdenum	✓			
Sodium				Sodium is not selected as a POC for any subcategory
Tin		✓		
Titanium		✓	✓	
Vanadium	✓			
Yttrium	✓			
Priority Organic Pollutants				
Acrylonitrile		✓		
Bis(2-chloroethoxy)methane		✓		
Bis(2-chloroethyl) Ether		✓		
Bis(2-ethylhexyl) Phthalate		✓		
Chloroform	✓			
4-Chloro-3-methylphenol		✓		
Dibenzo(a,h)anthracene	✓			
Dibromochloromethane	✓			
trans-1,3-Dichloropropene		✓		
1,2-Diphenylhydrazine	✓			
Methylene Chloride	✓			
Nitrobenzene		✓		
2-Nitrophenol	✓			
4-Nitrophenol	✓			
N-Nitrosodiphenylamine	✓			
Tribromomethane	✓			

Table 7-3 (Continued)

Pollutant	Not Detected (b)	Detected at Low Concentration (c)	Source Water Contaminant (d)	Comments
Priority Organic Pollutants (continued)				
1,1,1-Trichloroethane	✓			
Trichloroethene	✓			
Nonconventional Organic Pollutants				
Acetophenone	✓			
alpha-Terpineol	✓			
4-Aminobiphenyl	✓			
Benzenethiol		✓		
Benzoic Acid	✓			
Benzyl Alcohol	✓			
n-Decane	✓			
2,6-Di-tert-butyl-p-benzoquinone	✓			
N,N-Dimethylformamide	✓			
3,6-Dimethylphenanthrene	✓			
Dimethyl Sulfone	✓			
1,4-Dioxane		✓		
Diphenylamine	✓			
n-Docosane	✓			
n-Dodecane	✓			
n-Hexacosane	✓			
Hexanoic Acid	✓			
1-Methylfluorene		✓		
n-Octacosane	✓			
Resorcinol		✓		
n-Tetracosane	✓			
n-Tetradecane		✓		
n-Triacontane	✓			
1,3,5-Trithiane		✓		

Table 7-3 (Continued)

Pollutant	Not Detected (b)	Detected at Low Concentration (c)	Source Water Contaminant (d)	Comments
Priority Dioxin and Furans				
2,3,7,8-Tetrachlorodibenzo-p-dioxin		✓		
Nonconventional Dioxins and Furans				
1,2,3,7,8-Pentachlorodibenzo-p-dioxin	✓			
1,2,3,4,7,8-Hexachlorodibenzo-p-dioxin	✓			
1,2,3,6,7,8-Hexachlorodibenzo-p-dioxin	✓			
1,2,3,7,8,9-Hexachlorodibenzo-p-dioxin	✓			
1,2,3,4,6,7,8-Heptachlorodibenzo-p-dioxin	✓			
Octachlorodibenzo-p-dioxin	✓			
2,3,7,8-Tetrachlorodibenzofuran		✓		
1,2,3,7,8-Pentachlorodibenzofuran	✓			
2,3,4,7,8-Pentachlorodibenzofuran	✓			
1,2,3,4,7,8-Hexachlorodibenzofuran	✓			
1,2,3,6,7,8-Hexachlorodibenzofuran	✓			
1,2,3,7,8,9-Hexachlorodibenzofuran	✓			
2,3,4,6,7,8-Hexachlorodibenzofuran	✓			
1,2,3,4,6,7,8-Heptachlorodibenzofuran	✓			

Table 7-3 (Continued)

Pollutant	Not Detected (b)	Detected at Low Concentration (c)	Source Water Contaminant (d)	Comments
Nonconventional Dioxins and Furans (continued)				
1,2,3,4,7,8,9-Heptachlorodibenzofuran	✓			
Octachlorodibenzofuran	✓			

(a) Pollutants were detected in at least one untreated wastewater sample during EPA's 18 iron and steel sampling episodes. Check marks in a column indicate that the criterium applies to data from this segment.
(b) Pollutant was not detected in untreated process wastewater samples from any operations in this segment.
(c) The pollutant was detected at greater than or equal to 10 times the minimum level concentration in less than 10 percent of all untreated process wastewater samples.
(d) The mean detected concentration in untreated process wastewater samples was less than or equal to the mean detected concentration in source water samples.
(e) Pollutant does not have a specified minimum level.
(f) Nonconventional pollutants other than nonconventional metals, nonconventional organic pollutants, and nonconventional dioxins and furans.

Table 7-4

Pollutants of Concern
Cokemaking Subcategory - By-Product Recovery Segment

Pollutant Group	Pollutant of Concern
Conventional pollutants	Biochemical oxygen demand 5-day (BOD_5)
	Biochemical oxygen demand 5-day (BOD_5) - carbonaceous
	Oil and grease measured as hexane extractable material (HEM)
	Total suspended solids (TSS)
Nonconventional pollutants, other (a)	Amenable cyanide
	Ammonia as nitrogen
	Chemical oxygen demand (COD)
	Fluoride
	Nitrate/nitrite
	Total petroleum hydrocarbons measured as silica gel treated-hexane extractable material (SGT-HEM)
	Thiocyanate
	Total Kjeldahl nitrogen (TKN)
	Total organic carbon (TOC)
	Total phenols
	Weak acid dissociable (WAD) cyanide
Priority metals	Arsenic
	Mercury
	Selenium
Nonconventional metals	Boron
Priority organic pollutants	Acenaphthene
	Acenaphthylene
	Anthracene
	Benzene
	Benzidine
	Benzo(a)anthracene
	Benzo(a)pyrene
	Benzo(b)fluoranthene
	Benzo(k)fluoranthene
	Benzo(ghi)perylene
	Chrysene

Table 7-4 (Continued)

Pollutant Group	Pollutant of Concern
Priority organic pollutants (cont.)	1,2-Dichloroethane
	2,4-Dimethylphenol
	Ethylbenzene
	Fluoranthene
	Fluorene
	Indeno(1,2,3-cd)pyrene
	Naphthalene
	Phenanthrene
	Phenol
	Pyrene
	Toluene
Nonconventional organic pollutants	Aniline
	2,3-Benzofluorene
	beta-Naphthylamine
	Biphenyl
	2-Butanone
	Carbazole
	Carbon disulfide
	Dibenzofuran
	Dibenzothiophene
	4,5-Methylene phenanthrene
	2-Methylnaphthalene
	1-Methylphenanthrene
	m- + p-Xylene
	m-Xylene
	1-Naphthylamine
	n-Eicosane
	n-Hexadecane
	n-Octadecane
	o-Cresol
	o- + p-Xylene
	o-Toluidine
	o-Xylene

Table 7-4 (Continued)

Pollutant Group	Pollutant of Concern
Nonconventional organic pollutants (cont.)	p-Cresol
	Perylene
	2-Phenylnaphthalene
	2-Picoline
	2-Propanone
	Pyridine
	Styrene
	Thianaphthene
Other priority pollutants	Total cyanide

(a) Nonconventional pollutants other than nonconventional metals and nonconventional organic pollutants.

Table 7-5

Pollutants Not Identified as Pollutants of Concern Ironmaking Subcategory (a)

Pollutant	Not Detected (b)	Detected at Low Concentration (c)	Source Water Contaminant (d)	Comments
Conventional Pollutants				
pH (SU)		(e)		pH is not selected as a POC for any subcategory
Nonconventional Pollutants, Other (f)				
Chloride				Chloride is not selected as a POC for any subcategory
Sulfate		(e)		Except where noted, sulfate is not selected as a POC for any subcategory
Total Dissolved Solids (TDS)		(e)		TDS is not selected as a POC for any subcategory
Total Sulfide		✓		Total sulfide is not selected as a POC for any subcategory
Priority Metals				
Antimony		✓		
Beryllium		✓		
Nonconventional Metals				
Barium		✓		
Calcium				Calcium is not selected as a POC for any subcategory
Cobalt		✓		
Sodium				Sodium is not selected as a POC for any subcategory
Tin		✓		
Vanadium		✓		
Yttrium		✓		
Priority Organic Pollutants				
Acenaphthene	✓			
Acenaphthylene	✓			
Acrylonitrile	✓			
Anthracene	BF	S		
Benzene	✓			

Table 7-5 (Continued)

Pollutant	Not Detected (b)	Detected at Low Concentration (c)	Source Water Contaminant (d)	Comments
Priority Organic Pollutants (continued)				
Benzidine	✓			
Benzo(ghi)perylene	BF	S		
Bis(2-chloroethoxy)methane	✓			
Bis(2-chloroethyl) Ether	✓			
Bis(2-ethylhexyl) Phthalate		✓		
Chloroform	S	BF	BF	
4-Chloro-3-methylphenol		✓		
Dibenzo(a,h)anthracene	BF	S		
Dibromochloromethane	✓			
1,2-Dichloroethane	✓			
trans-1,3-Dichloropropene	✓			
1,2-Diphenylhydrazine	✓			
Ethylbenzene	✓			
Fluorene	BF	S		
Indeno(1,2,3-cd)pyrene	BF	S		
Methylene Chloride	✓			
Naphthalene	S	BF		
Nitrobenzene	✓			
2-Nitrophenol	BF	S		
N-Nitrosodiphenylamine	✓			
Toluene	✓			
Tribromomethane	✓			
1,1,1-Trichloroethane	✓			
Trichloroethene	✓			
Nonconventional Organic Pollutants				
Acetone		✓		
Acetophenone	✓			
alpha-Terpineol	✓			
4-Aminobiphenyl	BF	S		

Table 7-5 (Continued)

Pollutant	Not Detected (b)	Detected at Low Concentration (c)	Source Water Contaminant (d)	Comments
Nonconventional Organic Pollutants (continued)				
Aniline	✓			
Benzenethiol	✓			
2,3-Benzofluorene	BF	S		
Benzoic Acid	BF	S		
Benzyl Alcohol	BF	S		
Biphenyl	✓			
Carbazole	BF	S		
Carbon Disulfide	✓			
n-Decane	✓			
Dibenzofuran	BF	S		
Dibenzothiophene	BF	S		
2,6-Di-tert-butyl-p-benzoquinone	✓			
N,N-Dimethylformamide	BF	S		
3,6-Dimethylphenanthrene	BF	S		
Dimethyl Sulfone	BF	S		
1,4-Dioxane	✓			
Diphenylamine	✓			
n-Dodecane	BF	S		
n-Hexacosane	BF	S		
Hexanoic Acid		✓	✓	
Methyl Ethyl Ketone	✓			
4,5-Methylene Phenanthrene	✓			
1-Methylfluorene	✓			
2-Methylnaphthalene	BF	S		
1-Methylphenanthrene	BF	S		
alpha-Naphthylamine	✓			
beta-Naphthylamine	✓			
n-Octacosane	BF	S		
Perylene	✓			

Table 7-5 (Continued)

Pollutant	Not Detected (b)	Detected at Low Concentration (c)	Source Water Contaminant (d)	Comments
Nonconventional Organic Pollutants (continued)				
2-Phenylnaphthalene	✓			
2-Picoline	✓			
Resorcinol	✓			
Styrene	✓			
n-Tetradecane	BF	S		
Thianaphthene	✓			
o-Toluidine	S	BF		
n-Triacontane	BF	S		
1,3,5-Trithiane	✓			
m-Xylene	✓			
m- + p-Xylene	✓			
o-Xylene	✓			
o- + p-Xylene	✓			
Priority Dioxins and Furans				
2,3,7,8-Tetrachlorodibenzo-p-dioxin		✓		

(a) Pollutants were detected in at least one untreated wastewater sample during EPA's 18 iron and steel sampling episodes. Check marks in a column indicate that the criterium applies to data from all segments/operations within the subcategory, while letter codes indicate the specific segment/operation which correspond to the criterium. The following letter codes apply: BF- blast furnace ironmaking; S - sintering.
(b) Pollutant was not detected in untreated process wastewater samples from any operations in this subcategory.
(c) The pollutant was detected at greater than or equal to 10 times the minimum level concentration in less than 10 percent of all untreated process wastewater samples.
(d) The mean detected concentration in untreated process wastewater samples was less than or equal to the mean detected concentration in source water samples.
(e) Pollutant does not have a specified minimum level.
(f) Nonconventional pollutants other than nonconventional metals and nonconventional organic pollutants.

Table 7-6

Pollutants of Concern
Ironmaking Subcategory - Sintering Segment

Pollutant Group	Pollutant of Concern
Conventional pollutants	Oil and grease measured as hexane extractable material (HEM)
	Total suspended solids (TSS)
Nonconventional pollutants, other (a)	Amenable cyanide
	Ammonia as nitrogen
	Chemical oxygen demand (COD)
	Fluoride
	Nitrate/nitrite
	Total petroleum hydrocarbons measured as silica gel treated-hexane extractable material (SGT-HEM)
	Thiocyanate
	Total Kjeldahl nitrogen (TKN)
	Total organic carbon (TOC)
	Total phenols
	Weak acid dissociable (WAD) cyanide
Priority metals	Arsenic
	Cadmium
	Chromium
	Copper
	Lead
	Mercury
	Selenium
	Silver
	Thallium
	Zinc
Nonconventional metals	Aluminum
	Boron
	Iron
	Magnesium
	Manganese
	Titanium

Table 7-6 (Continued)

Pollutant Group	Pollutant of Concern
Priority organic pollutants	Benzo(a)anthracene
	Benzo(a)pyrene
	Benzo(b)fluoranthene
	Benzo(k)fluoranthene
	Chrysene
	2,4-Dimethylphenol
	Fluoranthene
	4-Nitrophenol
	Phenanthrene
	Phenol
	Pyrene
Nonconventional organic pollutants	n-Docosane
	n-Eicosane
	n-Hexadecane
	n-Octadecane
	n-Tetracosane
	o-Cresol
	p-Cresol
	Pyridine
Nonconventional dioxins and furans	1,2,3,4,6,7,8-Heptachlorodibenzofuran
	1,2,3,4,7,8,9-Heptachlorodibenzofuran
	1,2,3,4,6,7,8-Heptachlorodibenzo-p-dioxin
	1,2,3,4,7,8-Hexachlorodibenzofuran
	1,2,3,6,7,8-Hexachlorodibenzofuran
	1,2,3,7,8,9-Hexachlorodibenzofuran
	2,3,4,6,7,8-Hexachlorodibenzofuran
	1,2,3,4,7,8-Hexachlorodibenzo-p-dioxin
	1,2,3,6,7,8-Hexachlorodibenzo-p-dioxin
	1,2,3,7,8,9-Hexachlorodibenzo-p-dioxin
	Octachlorodibenzofuran
	Octachlorodibenzo-p-dioxin
	1,2,3,7,8-Pentachlorodibenzofuran
	2,3,4,7,8-Pentachlorodibenzofuran

Table 7-6 (Continued)

Pollutant Group	Pollutant of Concern
Nonconventional dioxins and furans (cont.)	1,2,3,7,8-Pentachlorodibenzo-p-dioxin
	2,3,7,8-Tetrachlorodibenzofuran
Other priority pollutants	Total cyanide

(a) Nonconventional pollutants other than nonconventional metals, nonconventional organic pollutants, and nonconventional dioxins and furans.

Table 7-7

Pollutants of Concern
Ironmaking Subcategory - Blast Furnace Segment

Pollutant Group	Pollutant of Concern
Conventional pollutants	Oil and grease measured as hexane extractable material (HEM)
	Total suspended solids (TSS)
Nonconventional pollutants, other (a)	Amenable cyanide
	Ammonia as nitrogen
	Chemical oxygen demand (COD)
	Fluoride
	Nitrate/nitrite
	Total petroleum hydrocarbons measured as silica gel treated-hexane extractable material (SGT-HEM)
	Thiocyanate
	Total Kjeldahl nitrogen (TKN)
	Total organic carbon (TOC)
	Weak acid dissociable (WAD) cyanide
Priority metals	Chromium
	Copper
	Lead
	Nickel
	Selenium
	Zinc
Nonconventional metals	Aluminum
	Boron
	Iron
	Magnesium
	Manganese
	Molybdenum
	Titanium
Nonconventional dioxins and furans	1,2,3,4,6,7,8-Heptachlorodibenzo-p-dioxin
Other priority pollutants	Total cyanide

(a) Nonconventional pollutants other than nonconventional metals and nonconventional dioxins and furans.

Table 7-8

Pollutants Not Identified as Pollutants of Concern Integrated Steelmaking Subcategory (a)

Pollutant	Not Detected (b)	Detected at Low Concentration (c)	Source Water Contaminant (d)	Comments
Conventional Pollutants				
pH (SU)		(e)		pH is not selected as a POC for any subcategory
Nonconventional Pollutants, Other (f)				
Chloride				Except where noted, chloride is not selected as a POC for any subcategory
Sulfate		(e)		Except where noted, sulfate is not selected as a POC for any subcategory
Total Dissolved Solids (TDS)		(e)		Except where noted, TDS is not selected as a POC for any subcategory
Total Kjeldahl Nitrogen (TKN)		(e)	VD, CC	
Total Recoverable Phenolics	VD, CC	BOF		
Priority Metals				
Arsenic		✓		
Selenium	VD	BOF	CC	
Thallium		✓		
Nonconventional Metals				
Aluminum, Dissolved		(e)		Dissolved metals are not considered POCs because they are accounted for in the total metal analysis
Antimony, Dissolved		(e)		Dissolved metals are not considered POCs because they are accounted for in the total metal analysis
Arsenic, Dissolved		(e)		Dissolved metals are not considered POCs because they are accounted for in the total metal analysis
Barium		✓		

Table 7-8 (Continued)

Pollutant	Not Detected (b)	Detected at Low Concentration (c)	Source Water Contaminant (d)	Comments
Nonconventional Metals (continued)				
Barium, Dissolved		(e)		Dissolved metals are not considered POCs because they are accounted for in the total metal analysis
Beryllium, Dissolved	✓			Dissolved metals are not considered POCs because they are accounted for in the total metal analysis
Boron		✓		
Boron, Dissolved		(e)		Dissolved metals are not considered POCs because they are accounted for in the total metal analysis
Calcium			VD	Except where noted, calcium is not selected as a POC for any subcategory
Calcium, Dissolved		(e)		Dissolved metals are not considered POCs because they are accounted for in the total metal analysis
Chromium, Dissolved		(e)		Dissolved metals are not considered POCs because they are accounted for in the total metal analysis
Copper, Dissolved	✓			Dissolved metals are not considered POCs because they are accounted for in the total metal analysis
Iron, Dissolved		(e)		Dissolved metals are not considered POCs because they are accounted for in the total metal analysis
Lead, Dissolved		(e)		Dissolved metals are not considered POCs because they are accounted for in the total metal analysis
Magnesium, Dissolved		(e)		Dissolved metals are not considered POCs because they are accounted for in the total metal analysis
Manganese, Dissolved		(e)		Dissolved metals are not considered POCs because they are accounted for in the total metal analysis
Mercury, Dissolved		(e)		Dissolved metals are not considered POCs because they are accounted for in the total metal analysis

Table 7-8 (Continued)

Pollutant	Not Detected (b)	Detected at Low Concentration (c)	Source Water Contaminant (d)	Comments
Nonconventional Metals (continued)				
Molybdenum, Dissolved		(e)		Dissolved metals are not considered POCs because they are accounted for in the total metal analysis
Nickel, Dissolved		(e)		Dissolved metals are not considered POCs because they are accounted for in the total metal analysis
Selenium, Dissolved		(e)		Dissolved metals are not considered POCs because they are accounted for in the total metal analysis
Sodium				Except where noted, sodium is not selected as a POC for any subcategory
Sodium, Dissolved		(e)		Dissolved metals are not considered POCs because they are accounted for in the total metal analysis
Titanium, Dissolved		(e)		Dissolved metals are not considered POCs because they are accounted for in the total metal analysis
Yttrium	VD	BOF, CC		
Yttrium, Dissolved	✓			Dissolved metals are not considered POCs because they are accounted for in the total metal analysis
Zinc, Dissolved		(e)		Dissolved metals are not considered POCs because they are accounted for in the total metal analysis
Priority Organic Pollutants				
Acenaphthene	✓			
Acenaphthylene	✓			
Acrylonitrile	✓			
Anthracene	✓			
Benzene	✓			
Benzidine	✓			
Benzo(a)anthracene	✓			
Benzo(b)fluoranthene	✓			

Table 7-8 (Continued)

Pollutant	Not Detected (b)	Detected at Low Concentration (c)	Source Water Contaminant (d)	Comments
Priority Organic Pollutants (continued)				
Benzo(k)fluoranthene	✓			
Benzo(ghi)perylene	✓			
Benzo(a)pyrene	✓			
Bis(2-chloroethoxy)methane	✓			
Bis(2-chloroethyl) Ether	✓			
Bis(2-ethylhexyl) Phthalate	✓			
Chloroform	✓			
4-Chloro-3-methylphenol	✓			
Chrysene	✓			
Dibenzo(a,h)anthracene	✓			
Dibromochloromethane	✓			
1,2-Dichloroethane	✓			
trans-1,3-Dichloropropene	✓			
2,4-Dimethylphenol	VD, CC	BOF		
1,2-Diphenylhydrazine	✓			
Ethylbenzene	✓			
Fluoranthene	✓			
Fluorene	✓			
Indeno(1,2,3-cd)pyrene	✓			
Methylene Chloride	✓			
Naphthalene	VD, CC	BOF		
Nitrobenzene	✓			
2-Nitrophenol	VD, CC	BOF		
4-Nitrophenol	✓			
N-Nitrosodiphenylamine	✓			
Phenanthrene	✓			
Pyrene	✓			

Table 7-8 (Continued)

Pollutant	Not Detected (b)	Detected at Low Concentration (c)	Source Water Contaminant (d)	Comments
Priority Organic Pollutants (continued)				
Toluene	✓			
Tribromomethane	✓			
1,1,1-Trichloroethane	✓			
Trichloroethene	VD, CC	BOF		
Nonconventional Organic Pollutants				
Acetone	VD, CC	BOF		
Acetophenone	✓			
alpha-Terpineol	✓			
4-Aminobiphenyl	✓			
Aniline	✓			
Benzenethiol	✓			
2,3-Benzofluorene	✓			
Benzoic Acid	✓			
Benzyl Alcohol	✓			
Biphenyl	✓			
Carbazole	✓			
Carbon Disulfide	✓			
o-Cresol	VD, CC	BOF		
p-Cresol	VD, CC	BOF		
n-Decane	✓			
Dibenzofuran	✓			
Dibenzothiophene	✓			
2,6-Di-tert-butyl-p-benzoquinone	✓			
N,N-Dimethylformamide	✓			
3,6-Dimethylphenanthrene	✓			
Dimethyl Sulfone	✓			
1,4-Dioxane	✓			
Diphenylamine	✓			

Table 7-8 (Continued)

Pollutant	Not Detected (b)	Detected at Low Concentration (c)	Source Water Contaminant (d)	Comments
Nonconventional Organic Pollutants (continued)				
n-Docosane	✓			
n-Dodecane	✓			
n-Eicosane	✓			
n-Hexacosane	✓			
n-Hexadecane	✓			
Hexanoic Acid	✓			
Methyl Ethyl Ketone	✓			
4,5-Methylene Phenanthrene	✓			
1-Methylfluorene	✓			
2-Methylnaphthalene	✓			
1-Methylphenanthrene	✓			
alpha-Naphthylamine	✓			
beta-Naphthylamine	✓			
n-Octacosane	✓			
n-Octadecane	✓			
Perylene	✓			
2-Phenylnaphthalene	✓			
2-Picoline	✓			
Pyridine	VD, CC	BOF		
Resorcinol	✓			
Styrene	VD, CC	BOF		
n-Tetracosane	✓			
n-Tetradecane	✓			
Thianaphthene	✓			
o-Toluidine	✓			
n-Triacontane	✓			
1,3,5-Trithiane	✓			
m-Xylene	✓			

Table 7-8 (Continued)

Pollutant	Not Detected (b)	Detected at Low Concentration (c)	Source Water Contaminant (d)	Comments
Nonconventional Organic Pollutants (continued)				
m- + p-Xylene	✓			
o-Xylene	✓			
o- + p-Xylene	✓			
Priority Dioxins and Furans				
2,3,7,8-Tetrachlorodibenzo-p-dioxin	BOF			
Nonconventional Dioxins and Furans				
1,2,3,7,8-Pentachlorodibenzo-p-dioxin	BOF			
1,2,3,4,7,8-Hexachlorodibenzo-p-dioxin	BOF			
1,2,3,6,7,8-Hexachlorodibenzo-p-dioxin	BOF			
1,2,3,7,8,9-Hexachlorodibenzo-p-dioxin	BOF			
1,2,3,4,6,7,8-Heptachlorodibenzo-p-dioxin	BOF			
Octachlorodibenzo-p-dioxin		BOF	BOF	
2,3,7,8-Tetrachlorodibenzofuran		BOF		
1,2,3,7,8-Pentachlorodibenzofuran	BOF			
2,3,4,7,8-Pentachlorodibenzofuran	BOF			
1,2,3,4,7,8-Hexachlorodibenzofuran	BOF			
1,2,3,6,7,8-Hexachlorodibenzofuran	BOF			

Table 7-8 (Continued)

Pollutant	Not Detected (b)	Detected at Low Concentration (c)	Source Water Contaminant (d)	Comments
Nonconventional Dioxins and Furans (continued)				
1,2,3,7,8,9-Hexachlorodibenzofuran	BOF			
2,3,4,6,7,8-Hexachlorodibenzofuran	BOF			
1,2,3,4,6,7,8-Heptachlorodibenzofuran	BOF			
1,2,3,4,7,8,9-Heptachlorodibenzofuran	BOF			
Octachlorodibenzofuran	BOF			

(a) Pollutants were detected in at least one untreated wastewater sample during EPA's 18 iron and steel sampling episodes. Check marks in a column indicate that the criterium applies to data from all segments/operations within the subcategory, while letter codes indicate the specific segment/operation which correspond to the criterium. The following letter codes apply: BOF - basic oxygen furnace steelmaking; VD - vacuum degassing; CC - continuous casting.
(b) Pollutant was not detected in untreated process wastewater samples from any operations in this subcategory.
(c) The pollutant was detected at greater than or equal to 10 times the minimum level concentration in less than 10 percent of all untreated process wastewater samples.
(d) The mean detected concentration in untreated process wastewater samples was less than or equal to the mean detected concentration in source water samples.
(e) Pollutant does not have a specified minimum level.
(f) Nonconventional pollutants other than nonconventional metals, nonconventional organic pollutants, and nonconventional dioxins and furans.

Table 7-9

Pollutants of Concern
Integrated Steelmaking Subcategory

Pollutant Group	Pollutant of Concern	BOF Steelmaking	Vacuum Degassing	Continuous Casting
Conventional pollutants	Oil and grease measured as hexane extractable material (HEM)	✔	✔	✔
	Total suspended solids (TSS)	✔	✔	✔
Nonconventional pollutants, other (a)	Ammonia as nitrogen	✔	✔	
	Chemical oxygen demand (COD)	✔	✔	✔
	Fluoride	✔	✔	✔
	Nitrate/nitrite	✔		
	Total petroleum hydrocarbons measured as silica gel treated-hexane extractable material (SGT-HEM)	✔	✔	✔
	Total organic carbon (TOC)	✔		✔
Priority metals	Antimony	✔		✔
	Beryllium	✔		
	Cadmium	✔		
	Chromium	✔		
	Copper	✔	✔	
	Lead	✔	✔	✔
	Mercury	✔		
	Nickel	✔		
	Silver	✔		
	Zinc	✔	✔	✔
Nonconventional metals	Aluminum	✔	✔	✔
	Cobalt	✔		
	Iron	✔	✔	✔
	Magnesium	✔		
	Manganese	✔	✔	✔
	Molybdenum	✔	✔	✔
	Tin	✔	✔	
	Titanium	✔	✔	
	Vanadium	✔		
Priority organic pollutants	Phenol	✔		

(a) Nonconventional pollutants other than nonconventional metals.

Table 7-10

Pollutants Not Identified as Pollutants of Concern Integrated and Stand-Alone Hot Forming Subcategory (a)

Pollutant	Not Detected (b)	Detected at Low Concentration (c)	Source Water Contaminant (d)	Comments
Conventional Pollutants				
pH (SU)		(e)		pH is not selected as a POC for any subcategory
Nonconventional Pollutants, Other (f)				
Chloride			✓	Chloride is not selected as a POC for any subcategory
Nitrate/Nitrite (NO2 + NO3-N)		✓	✓	
Sulfate		(e)		Except where noted, sulfate is not selected as a POC for any subcategory
Total Dissolved Solids (TDS)		(e)	✓	TDS is not selected as a POC for any subcategory
Total Kjeldahl Nitrogen (TKN)		(e)	✓	
Total Recoverable Phenolics	✓			
Priority Metals				
Arsenic		✓		
Beryllium	✓			
Cadmium	✓			
Mercury		✓		
Selenium		✓		
Silver		✓	✓	
Thallium		✓		
Nonconventional Metals				
Aluminum		✓	✓	
Barium		✓	✓	
Boron		✓	✓	
Calcium			✓	Calcium is not selected as a POC for any subcategory
Cobalt	✓			

Table 7-10 (Continued)

Pollutant	Not Detected (b)	Detected at Low Concentration (c)	Source Water Contaminant (d)	Comments
Nonconventional Metals (continued)				
Magnesium		✓	✓	
Sodium			✓	Sodium is not selected as a POC for any subcategory
Tin		✓		
Vanadium		✓		
Yttrium	✓			
Priority Organic Pollutants				
Acenaphthene	✓			
Acenaphthylene	✓			
Acrylonitrile	✓			
Anthracene	✓			
Benzene	✓			
Benzidine	✓			
Benzo(a)anthracene	✓			
Benzo(b)fluoranthene	✓			
Benzo(k)fluoranthene	✓			
Benzo(ghi)perylene	✓			
Benzo(a)pyrene	✓			
Bis(2-chloroethoxy)methane	✓			
Bis(2-chloroethyl) Ether	✓			
Bis(2-ethylhexyl) Phthalate	✓			
Chloroform	✓			
4-Chloro-3-methylphenol	✓			
Chrysene	✓			
Dibenzo(a,h)anthracene	✓			
Dibromochloromethane	✓			
1,2-Dichloroethane	✓			
trans-1,3-Dichloropropene	✓			
2,4-Dimethylphenol	✓			

Table 7-10 (Continued)

Pollutant	Not Detected (b)	Detected at Low Concentration (c)	Source Water Contaminant (d)	Comments
Priority Organic Pollutants (continued)				
1,2-Diphenylhydrazine	✓			
Ethylbenzene	✓			
Fluoranthene	✓			
Fluorene	✓			
Indeno(1,2,3-cd)pyrene	✓			
Methylene Chloride	✓			
Naphthalene	✓			
Nitrobenzene	✓			
2-Nitrophenol	✓			
4-Nitrophenol	✓			
N-Nitrosodiphenylamine	✓			
Phenanthrene	✓			
Phenol	✓			
Pyrene	✓			
Toluene	✓			
Tribromomethane	✓			
1,1,1-Trichloroethane	✓			
Trichloroethene	✓			
Nonconventional Organic Pollutants				
Acetone		✓		
Acetophenone	✓			
alpha-Terpineol	✓			
4-Aminobiphenyl	✓			
Aniline	✓			
Benzenethiol	✓			
2,3-Benzofluorene	✓			
Benzoic Acid	✓			
Benzyl Alcohol	✓			
Biphenyl	✓			
Carbazole	✓			
Carbon Disulfide	✓			

Table 7-10 (Continued)

Pollutant	Not Detected (b)	Detected at Low Concentration (c)	Source Water Contaminant (d)	Comments
Nonconventional Organic Pollutants (continued)				
o-Cresol	✓			
p-Cresol	✓			
n-Decane	✓			
Dibenzofuran	✓			
Dibenzothiophene	✓			
2,6-Di-tert-butyl-p-benzoquinone	✓			
N,N-Dimethylformamide	✓			
3,6-Dimethylphenanthrene	✓			
Dimethyl Sulfone	✓			
1,4-Dioxane	✓			
Diphenylamine	✓			
n-Docosane	✓			
n-Dodecane	✓			
n-Eicosane	✓			
n-Hexacosane	✓			
n-Hexadecane	✓			
Hexanoic Acid	✓			
Methyl Ethyl Ketone	✓			
4,5-Methylene Phenanthrene	✓			
1-Methylfluorene	✓			
2-Methylnaphthalene	✓			
1-Methylphenanthrene	✓			
alpha-Naphthylamine	✓			
beta-Naphthylamine	✓			
n-Octacosane	✓			
n-Octadecane	✓			
Perylene	✓			
2-Phenylnaphthalene	✓			
2-Picoline	✓			

Table 7-10 (Continued)

Pollutant	Not Detected (b)	Detected at Low Concentration (c)	Source Water Contaminant (d)	Comments
Nonconventional Organic Pollutants (continued)				
Pyridine	✓			
Resorcinol	✓			
Styrene	✓			
n-Tetracosane	✓			
n-Tetradecane	✓			
Thianaphthene	✓			
o-Toluidine	✓			
n-Triacontane	✓			
1,3,5-Trithiane	✓			
m-Xylene	✓			
m- + p-Xylene	✓			
o-Xylene	✓			
o- + p-Xylene	✓			

(a) Pollutants were detected in at least one untreated wastewater sample during EPA's 18 iron and steel sampling episodes. Check marks in a column indicate that the criterium applies to data from integrated and stand-alone hot forming operations on carbon and alloy steel. EPA did not sample integrated and stand-alone hot forming operations for stainless steelmaking operations; therefore, data on this table only apply to the integrated and stand-alone hot forming subcategory, carbon and alloy steel segment.
(b) Pollutant was not detected in untreated process wastewater samples from any operations in this subcategory.
(c) The pollutant was detected at greater than or equal to 10 times the minimum level concentration in less than 10 percent of all untreated process wastewater samples.
(d) The mean detected concentration in untreated process wastewater samples was less than or equal to the mean detected concentration in source water samples.
(e) Pollutant does not have a specified minimum level.
(f) Nonconventional pollutants other than nonconventional metals and nonconventional organic pollutants.

Table 7-11

Pollutants of Concern
Integrated and Stand-Alone Hot Forming Subcategory
Carbon and Alloy Steel Segment

Pollutant Group	Pollutant of Concern
Conventional pollutants	Oil and grease measured as hexane extractable material (HEM)
	Total suspended solids (TSS)
Nonconventional pollutants, other (a)	Ammonia as nitrogen
	Chemical oxygen demand (COD)
	Fluoride
	Total petroleum hydrocarbons measured as silica gel treated-hexane extractable material (SGT-HEM)
Priority metals	Lead
	Zinc
Nonconventional metals	Iron
	Manganese
	Molybdenum

(a) Nonconventional pollutants other than nonconventional metals.

Table 7-12

Pollutants of Concern
Integrated and Stand-Alone Hot Forming Subcategory
Stainless Steel Segment

Pollutant Group	Pollutant of Concern
Conventional pollutants	Oil and grease measured as hexane extractable material (HEM)
	Total suspended solids (TSS)
Nonconventional pollutants, other (a)	Chemical oxygen demand (COD)
	Fluoride
	Total petroleum hydrocarbons measured as silica gel treated-hexane extractable material (SGT-HEM)
	Total organic carbon (TOC)
Priority metals	Antimony
	Chromium
	Copper
	Nickel
	Zinc
Nonconventional metals	Iron
	Manganese
	Molybdenum
	Titanium

(a) Nonconventional pollutants other than nonconventional metals.

Table 7-13

Pollutants Not Identified as Pollutants of Concern Non-integrated Steelmaking and Hot Forming Subcategory (a)

Pollutant	Not Detected (b)	Detected at Low Concentration (c)	Source Water Contaminant (d)	Comments
Conventional Pollutants				
pH (SU)		(e)		pH is not selected as a POC for any subcategory
Nonconventional Pollutants, Other (f)				
Chloride				Except where noted, chloride is not selected as a POC for any subcategory
Sulfate		(e)		Except where noted, sulfate is not selected as a POC for any subcategory
Total Dissolved Solids (TDS)		(e)		Except where noted, TDS is not selected as a POC for any subcategory
Total Kjeldahl Nitrogen (TKN)		(e)		
Total Recoverable Phenolics		✓		
Priority Metals				
Arsenic		✓		
Beryllium	✓			
Cadmium	CC-S, HF-S, HF-C	CC-C		
Mercury	✓			
Selenium	HF-C	CC-S, HF-S, CC-C		
Silver	CC-S, HF-S, HF-C	CC-C		
Thallium	CC-S, CC-C, HF-C	HF-S		

Table 7-13 (Continued)

Pollutant	Not Detected (b)	Detected at Low Concentration (c)	Source Water Contaminant (d)	Comments
Nonconventional Metals				
Aluminum, Dissolved	CC-C, HF-C	(e)		Dissolved metals are not considered POCs because they are accounted for in the total metal analysis
Antimony, Dissolved	CC-C	(e)		Dissolved metals are not considered POCs because they are accounted for in the total metal analysis
Arsenic, Dissolved		(e)		Dissolved metals are not considered POCs because they are accounted for in the total metal analysis
Barium		HF-S, CC-S, CC-C, HF-C	CC-S	
Barium, Dissolved		(e)	CC-S, CC-C, HF-C	Dissolved metals are not considered POCs because they are accounted for in the total metal analysis
Beryllium, Dissolved	CC-S, CC-C, HF-C	(e)		Dissolved metals are not considered POCs because they are accounted for in the total metal analysis
Boron, Dissolved		(e)		Dissolved metals are not considered POCs because they are accounted for in the total metal analysis
Calcium		CC-S	CC-S	Except where noted, calcium is not selected as a POC for any subcategory
Calcium, Dissolved		(e)	CC-S	Dissolved metals are not considered POCs because they are accounted for in the total metal analysis
Chromium, Dissolved	HF-C	(e)	HF-S	Dissolved metals are not considered POCs because they are accounted for in the total metal analysis
Cobalt	CC-C	CC-S, HF-S, HF-C		
Copper, Dissolved	HF-S, CC-C, HF-C	(e)		Dissolved metals are not considered POCs because they are accounted for in the total metal analysis
Iron, Dissolved		(e)	CC-C, HF-C	Dissolved metals are not considered POCs because they are accounted for in the total metal analysis

Table 7-13 (Continued)

Pollutant	Not Detected (b)	Detected at Low Concentration (c)	Source Water Contaminant (d)	Comments
Nonconventional Metals (continued)				
Lead, Dissolved	CC-S, HF-S, HF-C	(e)	CC-C	Dissolved metals are not considered POCs because they are accounted for in the total metal analysis
Magnesium		✓		
Magnesium, Dissolved		(e)		Dissolved metals are not considered POCs because they are accounted for in the total metal analysis
Manganese, Dissolved		(e)	CC-C, HF-C	Dissolved metals are not considered POCs because they are accounted for in the total metal analysis
Mercury, Dissolved	CC-S, HF-S, CC-C	(e)		Dissolved metals are not considered POCs because they are accounted for in the total metal analysis
Molybdenum, Dissolved		(e)		Dissolved metals are not considered POCs because they are accounted for in the total metal analysis
Nickel, Dissolved	CC-C, HF-C	(e)		Dissolved metals are not considered POCs because they are accounted for in the total metal analysis
Selenium, Dissolved	CC-C, HF-C	(e)		Dissolved metals are not considered POCs because they are accounted for in the total metal analysis
Sodium				Except where noted, sodium is not selected as a POC for any subcategory
Sodium, Dissolved		(e)		Dissolved metals are not considered POCs because they are accounted for in the total metal analysis
Tin	HF-S, HF-C	CC-S, CC-C		
Titanium, Dissolved	HF-S, CC-C, HF-C	(e)		Dissolved metals are not considered POCs because they are accounted for in the total metal analysis
Vanadium	HF-S	CC-S, CC-C, HF-C		
Yttrium	CC-S, CC-C, HF-C	HF-S	HF-S	

Table 7-13 (Continued)

Pollutant	Not Detected (b)	Detected at Low Concentration (c)	Source Water Contaminant (d)	Comments
Nonconventional Metals (continued)				
Yttrium, Dissolved	HF-S, CC-C, HF-C	(e)		Dissolved metals are not considered POCs because they are accounted for in the total metal analysis
Zinc, Dissolved	CC-S, CC-C, HF-C	(e)		Dissolved metals are not considered POCs because they are accounted for in the total metal analysis
Priority Organic Pollutants				
Acenaphthene	✓			
Acenaphthylene	✓			
Acrylonitrile	✓			
Anthracene	✓			
Benzene	✓			
Benzidine	✓			
Benzo(a)anthracene	✓			
Benzo(b)fluoranthene	✓			
Benzo(k)fluoranthene	✓			
Benzo(ghi)perylene	✓			
Benzo(a)pyrene	✓			
Bis(2-chloroethoxy)methane	✓			
Bis(2-chloroethyl) Ether	✓			
Bis(2-ethylhexyl) Phthalate	✓			
Chloroform	✓			
4-Chloro-3-methylphenol	✓			
Chrysene	✓			
Dibenzo(a,h)anthracene	✓			
Dibromochloromethane	HF-S, CC-C, HF-C	CC-S		
1,2-Dichloroethane	✓			
trans-1,3-Dichloropropene	✓			
2,4-Dimethylphenol	✓			

Table 7-13 (Continued)

Pollutant	Not Detected (b)	Detected at Low Concentration (c)	Source Water Contaminant (d)	Comments
Priority Organic Pollutants (continued)				
1,2-Diphenylhydrazine	✓			
Ethylbenzene	✓			
Fluoranthene	✓			
Fluorene	✓			
Indeno(1,2,3-cd)pyrene	✓			
Methylene Chloride	✓			
Naphthalene	✓			
Nitrobenzene	✓			
2-Nitrophenol	✓			
4-Nitrophenol	✓			
N-Nitrosodiphenylamine	✓			
Phenanthrene	✓			
Phenol	✓			
Pyrene	✓			
Toluene	✓			
1,1,1-Trichloroethane	✓			
Trichloroethene	✓			
Nonconventional Organic Pollutants				
Acetone	CC-C, HF-C	CC-S, HF-S		
Acetophenone	✓			
alpha-Terpineol	✓			
4-Aminobiphenyl	✓			
Aniline	✓			
Benzenethiol	✓			
2,3-Benzofluorene	✓			
Benzoic Acid	HF-C	CC-S, HF-S, CC-C		
Benzyl Alcohol	HF-S	CC-S, CC-C, HF-C		
Biphenyl	✓			
Carbazole	✓			

Table 7-13 (Continued)

Pollutant	Not Detected (b)	Detected at Low Concentration (c)	Source Water Contaminant (d)	Comments
Nonconventional Organic Pollutants (continued)				
Carbon Disulfide	✓			
o-Cresol	✓			
p-Cresol	✓			
n-Decane	✓			
Dibenzofuran	✓			
Dibenzothiophene	✓			
2,6-Di-tert-butyl-p-benzoquinone	✓			
N,N-Dimethylformamide	✓			
3,6-Dimethylphenanthrene	✓			
Dimethyl Sulfone	✓			
1,4-Dioxane	✓			
Diphenylamine	✓			
n-Docosane	✓			
n-Dodecane	✓			
n-Eicosane	✓			
n-Hexacosane	✓			
n-Hexadecane	✓			
Hexanoic Acid	✓			
Methyl Ethyl Ketone	✓			
4,5-Methylene Phenanthrene	✓			
1-Methylfluorene	✓			
2-Methylnaphthalene	✓			
1-Methylphenanthrene	✓			
alpha-Naphthylamine	✓			
beta-Naphthylamine	✓			
n-Octacosane	✓			
n-Octadecane	✓			
Perylene	✓			

Table 7-13 (Continued)

Pollutant	Not Detected (b)	Detected at Low Concentration (c)	Source Water Contaminant (d)	Comments
Nonconventional Organic Pollutants (continued)				
2-Phenylnaphthalene	✓			
2-Picoline	✓			
Pyridine	✓			
Resorcinol	✓			
Styrene	✓			
n-Tetracosane	✓			
n-Tetradecane	✓			
Thianaphthene	✓			
o-Toluidine	✓			
n-Triacontane	✓			
1,3,5-Trithiane	✓			
m-Xylene	✓			
m- + p-Xylene	✓			
o-Xylene	✓			
o- + p-Xylene	✓			

(a) Pollutants were detected in at least one untreated wastewater sample during EPA's 18 iron and steel sampling episodes. Check marks in a column indicate that the criterium applies to data from all segments/operations within the subcategory, while letter codes indicate the specific segment/operation which correspond to the criterium. The following letter codes apply: CC-S - continuous casting, stainless steel; HF-S - hot forming, stainless steel; CC-C - continuous casting, carbon and alloy steel; HF-C - hot forming, carbon and alloy steel.
(b) Pollutant was not detected in untreated process wastewater samples from any operations in this subcategory.
(c) The pollutant was detected at greater than or equal to 10 times the minimum level concentration in less than 10 percent of all untreated process wastewater samples.
(d) The mean detected concentration in untreated process wastewater samples was less than or equal to the mean detected concentration in source water samples.
(e) Pollutant does not have a specified minimum level.
(f) Nonconventional pollutants other than nonconventional metals and nonconventional organic pollutants.

Table 7-14

Pollutants of Concern
Non-Integrated Steelmaking and Hot Forming Subcategory
Carbon and Alloy Steel Segment

Pollutant Group	Pollutant of Concern	Continuous Casting	Hot Forming
Conventional pollutants	Oil and grease measured as hexane extractable material (HEM)	✔	✔
	Total suspended solids (TSS)	✔	✔
Nonconventional pollutants, other (a)	Ammonia as nitrogen	✔	✔
	Chemical oxygen demand (COD)	✔	✔
	Fluoride	✔	✔
	Nitrate/nitrite		✔
	Total petroleum hydrocarbons measured as silica gel treated-hexane extractable material (SGT-HEM)	✔	✔
	Total organic carbon (TOC)	✔	✔
Priority metals	Copper	✔	
	Lead	✔	✔
	Zinc	✔	✔
Nonconventional metals	Boron	✔	
	Iron	✔	✔
	Manganese	✔	✔
	Molybdenum	✔	✔

(a) Nonconventional pollutants other than nonconventional metals.

Note: EPA did not identify POCs for vacuum degassing because EPA did not sample non-integrated vacuum degassing operations during its sampling program. POCs identified for continuous casting and hot forming apply to vacuum degassing.

Table 7-15

Pollutants of Concern
Non-Integrated Steelmaking and Hot Forming Subcategory
Stainless Steel Segment

Pollutant Group	Pollutant of Concern	Continuous Casting	Hot Forming
Conventional pollutants	Oil and grease measured as hexane extractable material (HEM)	✔	✔
	Total suspended solids (TSS)	✔	✔
Nonconventional pollutants, other (a)	Ammonia as nitrogen	✔	
	Chemical oxygen demand (COD)	✔	✔
	Fluoride	✔	✔
	Nitrate/nitrite	✔	
	Total petroleum hydrocarbons measured as silica gel treated-hexane extractable material (SGT-HEM)	✔	✔
	Total organic carbon (TOC)	✔	✔
Priority metals	Antimony		✔
	Chromium	✔	✔
	Copper	✔	✔
	Lead	✔	
	Nickel	✔	✔
	Zinc	✔	✔
Nonconventional metals	Aluminum	✔	
	Boron	✔	
	Hexavalent chromium	✔	
	Iron	✔	✔
	Manganese	✔	✔
	Molybdenum	✔	✔
	Titanium	✔	✔
Priority organic pollutants	Tribromomethane	✔	

(a) Nonconventional pollutants other than nonconventional metals.

Note: EPA did not identify POCs for vacuum degassing because EPA did not sample non-integrated vacuum degassing operations during its sampling program. POCs identified for continuous casting and hot forming apply to vacuum degassing.

Table 7-16

Pollutants Not Identified as Pollutants of Concern
Steel Finishing Subcategory (a)

Pollutant	Not Detected (b)	Detected at Low Concentration (c)	Source Water Contaminant (d)	Comments
Conventional Pollutants				
pH (SU)		(e)		pH is not selected as a POC for any subcategory
Nonconventional Pollutants, Other (f)				
Chloride			✓	Chloride is not selected as a POC for any subcategory
Total Dissolved Solids (TDS)		(e)	✓	TDS is not selected as a POC for any subcategory
Total Kjeldahl Nitrogen (TKN)	✓	(e)		
Priority Metals				
Beryllium	✓	✓		
Mercury	✓	✓		
Silver	✓	✓	✓	
Thallium	✓	✓		
Nonconventional Metals				
Calcium		✓	✓	Calcium is not selected as a POC for any subcategory
Sodium		✓	✓	Sodium is not selected as a POC for any subcategory
Yttrium	✓	✓		
Priority Organic Pollutants				
Acenaphthene	✓			
Acenaphthylene	✓			
Acrylonitrile	✓			
Anthracene	✓			
Benzene	✓	✓		
Benzidine	✓			
Benzo(a)anthracene	✓			
Benzo(b)fluoranthene	✓			
Benzo(k)fluoranthene	✓			

Table 7-16 (Continued)

Pollutant	Not Detected (b)	Detected at Low Concentration (c)	Source Water Contaminant (d)	Comments
Priority Organic Pollutants (continued)				
Benzo(ghi)perylene	✓			
Benzo(a)pyrene	✓			
Bis(2-chloroethoxy)methane	✓			
Bis(2-chloroethyl) Ether	✓			
Chloroform	✓	✓	✓	
4-Chloro-3-methylphenol	✓			
Chrysene	✓			
Dibenzo(a,h)anthracene	✓			
Dibromochloromethane	✓			
1,2-Dichloroethane	✓			
trans-1,3-Dichloropropene	✓			
2,4-Dimethylphenol	✓	✓		
1,2-Diphenylhydrazine	✓	✓		
Fluoranthene	✓			
Fluorene	✓			
Indeno(1,2,3-cd)pyrene	✓			
Methylene Chloride	✓	✓		
Nitrobenzene	✓			
2-Nitrophenol	✓			
4-Nitrophenol	✓			
N-Nitrosodiphenylamine	✓	✓		
Phenanthrene	✓	✓		
Pyrene	✓			
Tribromomethane	✓			
Trichloroethene	✓	✓		
Nonconventional Organic Pollutants				
Acetophenone	✓	✓		
4-Aminobiphenyl	✓			
Aniline	✓			
Benzenethiol	✓			

Table 7-16 (Continued)

Pollutant	Not Detected (b)	Detected at Low Concentration (c)	Source Water Contaminant (d)	Comments
Nonconventional Organic Pollutants (continued)				
2,3-Benzofluorene	✓			
Benzyl Alcohol	✓	✓		
Biphenyl	✓	✓		
Carbon Disulfide	✓	✓		
Carbazole	✓			
o-Cresol	✓			
p-Cresol	✓			
n-Decane	✓	✓		
Dibenzofuran	✓			
Dibenzothiophene	✓			
3,6-Dimethylphenanthrene	✓			
Dimethyl Sulfone	✓			
1,4-Dioxane	✓			
Diphenylamine	✓	✓		
n-Hexacosane	✓	✓		
Methyl Ethyl Ketone	✓	✓		
4,5-Methylene Phenanthrene	✓			
1-Methylfluorene	✓			
1-Methylphenanthrene	✓			
alpha-Naphthylamine	✓			
beta-Naphthylamine	✓			
n-Octacosane	✓			
Perylene	✓			
2-Phenylnaphthalene	✓			
2-Picoline	✓			
Pyridine	✓			
Resorcinol	✓			
Styrene	✓			
Thianaphthene	✓			
o-Toluidine	✓			

Table 7-16 (Continued)

Pollutant	Not Detected (b)	Detected at Low Concentration (c)	Source Water Contaminant (d)	Comments
Nonconventional Organic Pollutants (continued)				
n-Triacontane	✓	✓		
1,3,5-Trithiane	✓			
m- + p-Xylene	✓			
o-Xylene	✓			

(a) Pollutants were detected in at least one untreated wastewater sample during EPA's 18 iron and steel sampling episodes. Check marks in a column indicate that the criterium applies to data from at least one of the segments/operations within the subcategory. EPA did not incorporate segment/operational-level detail in this table because EPA sampled 14 different operations for this subcategory. See Section 5.4, DCN IS05030 of the iron and steel administrative record for detailed information presented by subcategory/segment/operation.
(b) Pollutant was not detected in untreated process wastewater samples from any operations in this subcategory.
(c) The pollutant was detected at greater than or equal to 10 times the minimum level concentration in less than 10 percent of all untreated process wastewater samples.
(d) The mean detected concentration in untreated process wastewater samples was less than or equal to the mean detected concentration in source water samples.
(e) Pollutant does not have a specified minimum level.
(f) Nonconventional pollutants other than nonconventional metals and nonconventional organic pollutants.

Table 7-17

Pollutants of Concern
Steel Finishing Subcategory - Carbon and Alloy Steel Segment

Pollutant Group	Pollutant of Concern	Acid Pickling	Cold Forming	Alkaline Cleaning	Hot Coating	Electro-plating
Conventional pollutants	Oil and grease measured as hexane extractable material (HEM)	✔	✔	✔	✔	✔
	Total suspended solids (TSS)	✔	✔	✔	✔	✔
Nonconventional pollutants, other (a)	Ammonia as nitrogen	✔	✔	✔	✔	✔
	Chemical oxygen demand (COD)	✔	✔	✔	✔	✔
	Fluoride	✔	✔	✔	✔	✔
	Nitrate/nitrite	✔			✔	✔
	Total petroleum hydrocarbons measured as silica gel treated-hexane extractable material (SGT-HEM)	✔	✔	✔	✔	✔
	Total organic carbon (TOC)	✔	✔	✔	✔	✔
	Total phenols		✔			
	Sulfate	✔				
Priority metals	Antimony				✔	
	Arsenic	✔	✔		✔	
	Chromium	✔	✔		✔	✔
	Copper	✔	✔	✔	✔	✔
	Lead				✔	✔
	Nickel	✔	✔		✔	✔
	Selenium					✔
	Zinc	✔	✔	✔	✔	✔
Nonconventional metals	Aluminum		✔		✔	
	Boron				✔	
	Hexavalent chromium				✔	✔
	Iron	✔	✔	✔	✔	✔

Table 7-17 (Continued)

Pollutant Group	Pollutant of Concern	Acid Pickling	Cold Forming	Alkaline Cleaning	Hot Coating	Electro-plating
Nonconventional metals (cont.)	Manganese	✔	✔	✔	✔	✔
	Molybdenum				✔	✔
	Tin			✔		
	Titanium	✔	✔		✔	✔
Priority organic pollutants	Bis(2-ethylhexyl) phthalate		✔			
	1,1,1-Trichloroethane		✔			
Nonconventional organic pollutants	alpha-Terpineol		✔			
	Benzoic acid		✔			
	n-Dodecane		✔			
	n-Eicosane		✔			
	n-Hexadecane		✔			
	n,n-Dimethylformamide	✔				
	n-Octadecane		✔			
	n-Tetradecane		✔			
	2-Propanone	✔				

(a) Nonconventional pollutants other than nonconventional metals and nonconventional organic pollutants.

Note: EPA did not identify POCs for stand-alone continuous annealing because EPA did not sample annealing quenching operations during its sampling program. POCs identified for the other finishing processes apply to continuous annealing.

Table 7-18

Pollutants of Concern
Steel Finishing Subcategory - Stainless Steel Segment

Pollutant Group	Pollutant of Concern	Acid Pickling and Descaling	Cold Forming	Alkaline Cleaning
Conventional pollutants	Oil and grease measured as hexane extractable material (HEM)	✔	✔	✔
	Total suspended solids (TSS)	✔	✔	✔
Nonconventional pollutants, other (a)	Ammonia as nitrogen	✔	✔	✔
	Chemical oxygen demand (COD)	✔	✔	✔
	Fluoride	✔	✔	✔
	Nitrate/nitrite	✔		
	Total petroleum hydrocarbons measured as silica gel treated-hexane extractable material (SGT-HEM)	✔	✔	✔
	Total cyanide	✔		
	Total organic carbon (TOC)	✔	✔	
	Total phenols		✔	
Priority metals	Antimony	✔	✔	
	Arsenic	✔	✔	
	Cadmium	✔	✔	
	Chromium	✔	✔	
	Copper	✔	✔	
	Lead	✔		
	Nickel	✔	✔	
	Selenium	✔		
	Zinc	✔	✔	
Nonconventional metals	Aluminum	✔	✔	
	Barium	✔		
	Boron	✔		
	Cobalt	✔		
	Hexavalent chromium	✔	✔	
	Iron	✔	✔	✔

Table 7-18 (Continued)

Pollutant Group	Pollutant of Concern	Acid Pickling and Descaling	Cold Forming	Alkaline Cleaning
Nonconventional metals (cont.)	Magnesium	✔		✔
	Manganese	✔	✔	✔
	Molybdenum	✔	✔	
	Tin	✔	✔	
	Titanium	✔	✔	✔
	Vanadium	✔		
Priority organic pollutants	Ethylbenzene		✔	
	Naphthalene		✔	
	Phenol		✔	
	Toluene		✔	
Nonconventional organic pollutants	Benzoic acid		✔	
	2,6-Di-tert-butyl-p-benzoquinone		✔	
	Hexanoic acid		✔	
	2-Methylnaphthalene		✔	
	m-Xylene		✔	
	n-Docosane		✔	
	n-Dodecane		✔	
	n-Eicosane		✔	
	n-Hexadecane		✔	
	n-Octadecane		✔	
	n-Tetracosane		✔	
	n-Tetradecane		✔	
	o- + p-Xylene		✔	
	2-Propanone		✔	

(a) Nonconventional pollutants other than nonconventional metals and nonconventional organic pollutants.

Note: EPA did not identify POCs for stand-alone continuous annealing because EPA did not sample annealing quenching operations during its sampling program. POCs identified for the other finishing processes apply to continuous annealing.

Table 7-19

Pollutants Not Identified as Pollutants of Concern
Other Operations Subcategory - Direct-Reduced Ironmaking Segment (a)

Pollutant	Not Detected (b)	Detected at Low Concentration (c)	Source Water Contaminant (d)	Comments
Conventional Pollutants				
pH (SU)		(e)		pH is not selected as a POC for any subcategory
Nonconventional Pollutants, Other (f)				
Chloride				Except where noted, chloride is not selected as a POC for any subcategory
Nitrate/Nitrite (NO2 + NO3-N)	✓			
Sulfate		(e)	✓	Except where noted, sulfate is not selected as a POC for any subcategory
Total Dissolved Solids (TDS)		(e)		Except where noted, TDS is not selected as a POC for any subcategory
Total Kjeldahl Nitrogen (TKN)		(e)		
Total Organic Carbon (TOC)		✓		
Total Recoverable Phenolics		✓		
Priority Metals				
Antimony		✓		
Arsenic		✓		
Beryllium	✓			
Cadmium	✓			
Chromium		✓		
Copper	✓			
Lead		✓		
Mercury	✓			
Nickel	✓			
Selenium	✓			
Silver	✓			

Table 7-19 (Continued)

Pollutant	Not Detected (b)	Detected at Low Concentration (c)	Source Water Contaminant (d)	Comments
Priority Metals (continued)				
Thallium	✓			
Zinc		✓	✓	
Nonconventional Metals				
Aluminum, Dissolved		(e)	✓	Dissolved metals are not considered POCs because they are accounted for in the total metal analysis
Antimony, Dissolved	✓			Dissolved metals are not considered POCs because they are accounted for in the total metal analysis
Arsenic, Dissolved		(e)		Dissolved metals are not considered POCs because they are accounted for in the total metal analysis
Barium		✓		
Barium, Dissolved		(e)		Dissolved metals are not considered POCs because they are accounted for in the total metal analysis
Beryllium, Dissolved	✓			Dissolved metals are not considered POCs because they are accounted for in the total metal analysis
Boron		✓		
Boron, Dissolved		(e)		Dissolved metals are not considered POCs because they are accounted for in the total metal analysis
Calcium				Except where noted, calcium is not selected as a POC for any subcategory
Calcium, Dissolved		(e)		Dissolved metals are not considered POCs because they are accounted for in the total metal analysis
Chromium, Dissolved		(e)		Dissolved metals are not considered POCs because they are accounted for in the total metal analysis
Cobalt	✓			
Copper, Dissolved	✓			Dissolved metals are not considered POCs because they are accounted for in the total metal analysis

Table 7-19 (Continued)

Pollutant	Not Detected (b)	Detected at Low Concentration (c)	Source Water Contaminant (d)	Comments
Nonconventional Metals (continued)				
Iron, Dissolved		(e)		Dissolved metals are not considered POCs because they are accounted for in the total metal analysis
Lead, Dissolved	✓			Dissolved metals are not considered POCs because they are accounted for in the total metal analysis
Magnesium		✓		
Magnesium, Dissolved		(e)		Dissolved metals are not considered POCs because they are accounted for in the total metal analysis
Manganese, Dissolved		(e)		Dissolved metals are not considered POCs because they are accounted for in the total metal analysis
Mercury, Dissolved	✓			Dissolved metals are not considered POCs because they are accounted for in the total metal analysis
Molybdenum		✓		
Molybdenum, Dissolved		(e)		Dissolved metals are not considered POCs because they are accounted for in the total metal analysis
Nickel, Dissolved	✓			Dissolved metals are not considered POCs because they are accounted for in the total metal analysis
Selenium, Dissolved	✓			Dissolved metals are not considered POCs because they are accounted for in the total metal analysis
Sodium				Except where noted, sodium is not selected as a POC for any subcategory
Sodium, Dissolved		(e)		Dissolved metals are not considered POCs because they are accounted for in the total metal analysis
Tin	✓			
Titanium, Dissolved	✓			Dissolved metals are not considered POCs because they are accounted for in the total metal analysis
Vanadium	✓			
Yttrium		✓		

Table 7-19 (Continued)

Pollutant	Not Detected (b)	Detected at Low Concentration (c)	Source Water Contaminant (d)	Comments
Nonconventional Metals (continued)				
Yttrium, Dissolved	✓			Dissolved metals are not considered POCs because they are accounted for in the total metal analysis
Zinc, Dissolved	✓			Dissolved metals are not considered POCs because they are accounted for in the total metal analysis
Priority Organic Pollutants				
Acenaphthene	✓			
Acenaphthylene	✓			
Acrylonitrile	✓			
Anthracene	✓			
Benzene	✓			
Benzidine	✓			
Benzo(a)anthracene	✓			
Benzo(b)fluoranthene	✓			
Benzo(k)fluoranthene	✓			
Benzo(ghi)perylene	✓			
Benzo(a)pyrene	✓			
Bis(2-chloroethoxy)methane	✓			
Bis(2-chloroethyl) Ether	✓			
Bis(2-ethylhexyl) Phthalate	✓			
Chloroform	✓			
4-Chloro-3-methylphenol	✓			
Chrysene	✓			
Dibenzo(a,h)anthracene	✓			
Dibromochloromethane	✓			
1,2-Dichloroethane	✓			
trans-1,3-Dichloropropene	✓			
2,4-Dimethylphenol	✓			
1,2-Diphenylhydrazine	✓			

Table 7-19 (Continued)

Pollutant	Not Detected (b)	Detected at Low Concentration (c)	Source Water Contaminant (d)	Comments
Priority Organic Pollutants (continued)				
Ethylbenzene	✓			
Fluoranthene	✓			
Fluorene	✓			
Indeno(1,2,3-cd)pyrene	✓			
Methylene Chloride	✓			
Naphthalene	✓			
Nitrobenzene	✓			
2-Nitrophenol	✓			
4-Nitrophenol	✓			
N-Nitrosodiphenylamine	✓			
Phenanthrene	✓			
Phenol		✓		
Pyrene	✓			
Toluene	✓			
Tribromomethane	✓			
1,1,1-Trichloroethane	✓			
Trichloroethene	✓			
Nonconventional Organic Pollutants				
Acetone	✓			
Acetophenone	✓			
alpha-Terpineol	✓			
4-Aminobiphenyl	✓			
Aniline	✓			
Benzenethiol	✓			
2,3-Benzofluorene	✓			
Benzoic Acid	✓			
Benzyl Alcohol	✓			
Biphenyl	✓			
Carbazole	✓			
Carbon Disulfide	✓			
o-Cresol	✓			

Table 7-19 (Continued)

Pollutant	Not Detected (b)	Detected at Low Concentration (c)	Source Water Contaminant (d)	Comments
Nonconventional Organic Pollutants (continued)				
p-Cresol	✓			
n-Decane	✓			
Dibenzofuran	✓			
Dibenzothiophene	✓			
2,6-Di-tert-butyl-p-benzoquinone	✓			
N,N-Dimethylformamide	✓			
3,6-Dimethylphenanthrene	✓			
Dimethyl Sulfone	✓			
1,4-Dioxane	✓			
Diphenylamine	✓			
n-Docosane	✓			
n-Dodecane	✓			
n-Eicosane	✓			
n-Hexacosane	✓			
n-Hexadecane	✓			
Hexanoic Acid	✓			
Methyl Ethyl Ketone	✓			
4,5-Methylene Phenanthrene	✓			
1-Methylfluorene	✓			
2-Methylnaphthalene	✓			
1-Methylphenanthrene	✓			
alpha-Naphthylamine	✓			
beta-Naphthylamine	✓			
n-Octacosane	✓			
n-Octadecane	✓			
Perylene	✓			
2-Phenylnaphthalene	✓			
2-Picoline	✓			
Pyridine	✓			

Table 7-19 (Continued)

Pollutant	Not Detected (b)	Detected at Low Concentration (c)	Source Water Contaminant (d)	Comments
Nonconventional Organic Pollutants (continued)				
Resorcinol	✓			
Styrene	✓			
n-Tetracosane	✓			
n-Tetradecane	✓			
Thianaphthene	✓			
o-Toluidine	✓			
n-Triacontane	✓			
1,3,5-Trithiane	✓			
m- + p-Xylene	✓			
o-Xylene	✓			

(a) Pollutants were detected in at least one untreated wastewater sample during EPA's 18 iron and steel sampling episodes. Check marks in a column indicate that the criterium applies to data from this segment.
(b) Pollutant was not detected in untreated process wastewater samples from any operations in this segment.
(c) The pollutant was detected at greater than or equal to 10 times the minimum level concentration in less than 10 percent of all untreated process wastewater samples.
(d) The mean detected concentration in untreated process wastewater samples was less than or equal to the mean detected concentration in source water samples.
(e) Pollutant does not have a specified minimum level.
(f) Nonconventional pollutants other than nonconventional metals and nonconventional organic pollutants.

Table 7-20

Pollutants of Concern
Other Operations Subcategory - Direct-Reduced Ironmaking Segment

Pollutant Group	Pollutant of Concern
Conventional pollutants	Oil and grease measured as hexane extractable material (HEM)
	Total suspended solids (TSS)
Nonconventional pollutants, other (a)	Ammonia as nitrogen
	Chemical oxygen demand (COD)
	Fluoride
	Total petroleum hydrocarbons measured as silica gel treated-hexane extractable material (SGT-HEM)
Nonconventional metals	Aluminum
	Iron
	Manganese
	Titanium

(a) Nonconventional pollutants other than nonconventional metals.

Table 7-21

Untreated Process Wastewater Characteristics for Pollutants of Concern Cokemaking Subcategory - By-Product Recovery Segment (a)

Pollutant of Concern	Number of Times Analyzed	Number of Times Detected	Percentage of Samples Detected Greater Than 10x Minimum Level	Minimum Level
Conventional Pollutants				
Biochemical oxygen demand 5-day (BOD_5)	16	16	Not Applicable	Not Applicable
Biochemical oxygen demand 5-day (BOD_5) - carbonaceous	16	15	94	2
Oil and grease measured as hexane extractable material (HEM)	16	16	69	5
Total suspended solids (TSS)	16	16	25	4
Nonconventional Pollutants, Other (b)				
Amenable cyanide	16	13	81	0.02
Ammonia as nitrogen	16	16	100	0.01
Chemical oxygen demand (COD)	16	16	100	5
Fluoride	16	16	100	0.1
Nitrate/nitrite	16	15	75	0.05
Total petroleum hydrocarbons measured as silica gel treated-hexane extractable material (SGT-HEM)	16	16	Not Applicable	Not Applicable
Thiocyanate	16	16	Not Applicable	Not Applicable
Total Kjeldahl nitrogen (TKN)	16	16	Not Applicable	Not Applicable
Total organic carbon (TOC)	16	15	94	1
Total phenols	16	16	100	0.05
Weak acid dissociable (WAD) cyanide	16	16	Not Applicable	Not Applicable
Priority Metals				
Arsenic	16	15	25	0.01
Mercury	16	12	31	0.0002
Selenium	16	16	100	0.005
Nonconventional Metals				
Boron	16	16	13	0.1

Table 7-21 (Continued)

Pollutant of Concern	Number of Times Analyzed	Number of Times Detected	Percentage of Samples Detected Greater Than 10x Minimum Level	Minimum Level
Priority Organic Pollutants				
Acenaphthene	16	12	63	0.01
Acenaphthylene	16	16	100	0.01
Anthracene	16	16	100	0.01
Benzene	16	16	100	0.01
Benzidine	9	1	11	0.05
Benzo(a)anthracene	16	11	63	0.01
Benzo(a)pyrene	15	10	60	0.01
Benzo(b)fluoranthene	15	10	53	0.01
Benzo(k)fluoranthene	15	7	33	0.01
Benzo(ghi)perylene	15	5	27	0.02
Chrysene	16	10	56	0.01
1,2-Dichloroethane	16	2	13	0.01
2,4-Dimethylphenol	16	16	100	0.01
Ethylbenzene	16	8	19	0.01
Fluoranthene	16	16	100	0.01
Fluorene	16	16	100	0.01
Indeno(1,2,3-cd)pyrene	16	5	25	0.02
Naphthalene	16	16	100	0.01
Phenanthrene	16	16	100	0.01
Phenol	16	16	100	0.01
Pyrene	16	16	100	0.01
Toluene	16	16	100	0.01
Nonconventional Organic Pollutants				
Aniline	16	10	63	0.01
2,3-Benzofluorene	16	3	13	0.01
beta-Naphthylamine	15	4	13	0.05
Biphenyl	16	9	56	0.01
2-Butanone	16	5	13	0.05
Carbazole	16	16	100	0.02
Carbon disulfide	16	6	19	0.01
Dibenzofuran	16	16	100	0.01
Dibenzothiophene	16	10	56	0.01
4,5-Methylene phenanthrene	16	9	44	0.02
2-Methylnaphthalene	16	13	75	0.01

Table 7-21 (Continued)

Pollutant of Concern	Number of Times Analyzed	Number of Times Detected	Percentage of Samples Detected Greater Than 10x Minimum Level	Minimum Level
Nonconventional Organic Pollutants (continued)				
1-Methylphenanthrene	16	4	19	0.01
m- + p-Xylene	15	15	100	0.01
m-Xylene	1	1	100	0.01
1-Naphthylamine	16	10	63	0.01
n-Eicosane	16	5	25	0.01
n-Hexadecane	15	5	33	0.01
n-Octadecane	16	5	25	0.01
o-Cresol	16	16	100	0.01
o- + p-Xylene	1	1	100	0.01
o-Toluidine	16	5	31	0.01
o-Xylene	15	11	53	0.01
p-Cresol	16	16	100	0.01
Perylene	16	5	19	0.01
2-Phenylnaphthalene	16	10	63	0.01
2-Picoline	15	15	100	0.05
2-Propanone	16	16	94	0.05
Pyridine	16	16	100	0.01
Styrene	15	15	100	0.01
Thianaphthene	16	14	88	0.01
Other Priority Pollutants				
Total cyanide	16	16	100	0.02

(a) Mean, median, and detection limit range concentrations not disclosed to prevent compromising confidential business information.
(b) Nonconventional pollutants other than nonconventional metals and nonconventional organic pollutants.

Table 7-22

Untreated Process Wastewater Characteristics for Pollutants of Concern Ironmaking Subcategory

Pollutant of Concern	Number of Times Analyzed	Number of Times Detected	Percentage of Samples Detected Greater Than 10x Minimum Level	Detected Concentrations (mg/L)		Detection Limit Range for Nondetects	Minimum Level
				Mean	Median		
Conventional Pollutants							
Oil and grease measured as hexane extractable material (HEM)	30	12	0	13.2	13.1	5-6	5
Total suspended solids (TSS)	30	30	97	1320	586	Not Applicable	4
Nonconventional Pollutants, Other (b)							
Amenable cyanide	24	20	46	0.24	0.229	0.005	0.02
Ammonia as nitrogen	30	30	100	85.9	61.4	Not Applicable	0.01
Chemical oxygen demand (COD)	30	27	90	1370	356	10-20	5
Fluoride	30	30	100	31.9	18.6	Not Applicable	0.1
Nitrate/nitrite	30	29	90	4.29	3.6	1.6	0.05
Total petroleum hydrocarbons measured as silica gel treated-hexane extractable material (SGT-HEM)	30	10	Not Applicable	11.5	12.8	5-6	Not Applicable
Thiocyanate	30	22	0	11.5	0.605	0.1	Not Applicable
Total Kjeldahl nitrogen (TKN)	26	26	Not Applicable	82.8	50.4	Not Applicable	Not Applicable
Total organic carbon (TOC)	30	25	67	19.6	21.2	10	1
Total phenols	30	21	3	0.206	0.135	0.05-0.1	0.05
Weak acid dissociable (WAD) cyanide	30	25	Not Applicable	0.184	0.0387	0.002	Not Applicable

Table 7-22 (Continued)

Pollutant of Concern	Number of Times Analyzed	Number of Times Detected	Percentage of Samples Detected Greater Than 10x Minimum Level	Detected Concentrations (mg/L)		Detection Limit Range for Nondetects	Minimum Level
				Mean	Median		
Priority Metals							
Arsenic	30	27	17	(a)	(a)	(a)	0.01
Cadmium	30	24	23	(a)	(a)	(a)	0.005
Chromium	30	28	37	(a)	(a)	(a)	0.01
Copper	30	24	23	(a)	(a)	(a)	0.025
Lead	30	30	83	(a)	(a)	Not Applicable	0.05
Mercury	30	14	17	(a)	(a)	(a)	0.0002
Nickel	30	27	7	(a)	(a)	(a)	0.04
Selenium	30	19	33	(a)	(a)	(a)	0.005
Silver	30	11	7	(a)	(a)	(a)	0.01
Thallium	30	23	33	(a)	(a)	(a)	0.01
Zinc	30	30	100	(a)	(a)	Not Applicable	0.02
Nonconventional Metals							
Aluminum	30	30	90	(a)	(a)	Not Applicable	0.2
Boron	30	30	50	(a)	(a)	Not Applicable	0.1
Iron	30	30	100	(a)	(a)	Not Applicable	0.1
Magnesium	30	30	47	(a)	(a)	Not Applicable	5
Manganese	30	30	100	(a)	(a)	Not Applicable	0.015
Molybdenum	30	28	17	(a)	(a)	(a)	0.01
Titanium	30	29	77	(a)	(a)	(a)	0.005

Table 7-22 (Continued)

Pollutant of Concern	Number of Times Analyzed	Number of Times Detected	Percentage of Samples Detected Greater Than 10x Minimum Level	Detected Concentrations (mg/L)		Detection Limit Range for Nondetects	Minimum Level
				Mean	Median		
Priority Organic Pollutants							
Benzo(a)anthracene	18	2	11	0.135	0.135	0.01	0.01
Benzo(a)pyrene	18	2	11	0.119	0.119	0.01	0.01
Benzo(b)fluoranthene	18	2	11	0.35	0.350	0.01	0.01
Benzo(k)fluoranthene	18	1	6	0.15	0.150	0.01-0.1	0.01
Chrysene	18	2	11	0.233	0.233	0.01	0.01
2,4-Dimethylphenol	18	6	6	0.0608	0.0413	0.01-0.1	0.01
Fluoranthene	18	5	11	0.143	0.0152	0.01	0.01
4-Nitrophenol	18	5	6	0.223	0.0860	0.05-0.5	0.05
Phenanthrene	18	6	11	0.0693	0.0172	0.01	0.01
Phenol	18	9	33	0.221	0.135	0.01	0.01
Pyrene	18	2	11	0.205	0.205	0.01	0.01
Nonconventional Organic Pollutants							
n-Docosane	18	1	6	0.115	0.115	0.01-0.1	0.01
n-Eicosane	18	2	11	0.162	0.162	0.01	0.01
n-Hexadecane	18	2	11	0.168	0.168	0.01	0.01
n-Octadecane	18	2	11	0.145	0.145	0.01	0.01
n-Tetracosane	18	1	6	0.2	0.2	0.01-0.1	0.01
o-Cresol	18	7	6	0.0691	0.026	0.01-0.1	0.01
p-Cresol	18	7	6	0.0905	0.0604	0.01-0.1	0.01
Pyridine	18	9	17	0.0965	0.072	0.01	0.01

Table 7-22 (Continued)

Pollutant of Concern	Number of Times Analyzed	Number of Times Detected	Percentage of Samples Detected Greater Than 10x Minimum Level	Detected Concentrations (mg/L)		Detection Limit Range for Nondetects	Minimum Level
				Mean	Median		
Nonconventional Dioxin and Furans (concentrations in pg/L)							
1,2,3,4,6,7,8-Heptachlorodibenzofuran	12	5	17	(a)	(a)	(a)	50
1,2,3,4,7,8,9-Heptachlorodibenzofuran	12	4	8	(a)	(a)	(a)	50
1,2,3,4,6,7,8-Heptachlorodibenzo-p-dioxin	12	6	17	(a)	(a)	(a)	50
1,2,3,4,7,8-Hexachlorodibenzofuran	12	4	17	(a)	(a)	(a)	50
1,2,3,6,7,8-Hexachlorodibenzofuran	12	4	17	(a)	(a)	(a)	50
1,2,3,7,8,9-Hexachlorodibenzofuran	12	2	8	(a)	(a)	(a)	50
2,3,4,6,7,8-Hexachlorodibenzofuran	12	4	17	(a)	(a)	(a)	50
1,2,3,4,7,8-Hexachlorodibenzo-p-dioxin	12	2	8	(a)	(a)	(a)	50
1,2,3,6,7,8-Hexachlorodibenzo-p-dioxin	12	3	8	(a)	(a)	(a)	50
1,2,3,7,8,9-Hexachlorodibenzo-p-dioxin	12	3	8	(a)	(a)	(a)	50
Octachlorodibenzofuran	12	5	8	(a)	(a)	(a)	100
Octachlorodibenzo-p-dioxin	12	10	17	(a)	(a)	(a)	100
1,2,3,7,8-Pentachlorodibenzofuran	12	4	17	(a)	(a)	(a)	50
2,3,4,7,8-Pentachlorodibenzofuran	12	4	17	(a)	(a)	(a)	50
1,2,3,7,8-Pentachlorodibenzo-p-dioxin	12	2	8	(a)	(a)	(a)	50
2,3,7,8-Tetrachlorodibenzofuran	12	5	33	(a)	(a)	(a)	10
Other Priority Pollutants							
Total Cyanide	29	24	45	0.306	0.348	0.005	0.02

(a) Mean, median, and detection limit range concentrations not disclosed to prevent compromising confidential business information.
(b) Nonconventional pollutants other than nonconventional metals, nonconventional organic pollutants, and nonconventional dioxins and furans.

Table 7-23

Untreated Process Wastewater Characteristics for Pollutants of Concern Integrated Steelmaking Subcategory

Pollutant of Concern	Number of Times Analyzed	Number of Times Detected	Percentage of Samples Detected Greater Than 10x Minimum Level	Detected Concentrations (mg/L)		Detection Limit Range for Nondetects	Minimum Level
				Mean	Median		
Conventional Pollutants							
Oil and grease measured as hexane extractable material (HEM)	42	15	0	12.6	11.25	5-6.25	5
Total suspended solids (TSS)	43	43	79	5040	958	Not Applicable	4
Nonconventional Pollutants, Other (a)							
Ammonia as nitrogen	42	33	79	0.665	0.5	0.1-1	0.01
Chemical oxygen demand (COD)	42	41	71	229	97	20	5
Fluoride	43	42	98	23.3	15.8	0.2	0.1
Nitrate/nitrite	42	41	69	1.99	1.98	0.01	0.05
Total petroleum hydrocarbons measured as silica gel treated-hexane extractable material (SGT-HEM)	43	8	Not Applicable	11.2	8.38	5-6.25	Not Applicable
Total organic carbon (TOC)	42	12	19	136	26.2	10	1
Priority Metals							
Antimony	48	34	19	0.134	0.0855	0.002-0.03	0.02
Beryllium	48	3	6	0.0683	0.066	0.001	0.005
Cadmium	48	30	29	0.12	0.0368	0.001-0.005	0.005
Chromium	48	44	56	1.3	0.103	0.01	0.01
Copper	48	41	52	1.02	0.437	0.009-0.01	0.025
Lead	48	48	65	8.62	1.68	Not Applicable	0.05

Table 7-23 (Continued)

Pollutant of Concern	Number of Times Analyzed	Number of Times Detected	Percentage of Samples Detected Greater Than 10x Minimum Level	Detected Concentrations (mg/L)		Detection Limit Range for Nondetects	Minimum Level
				Mean	Median		
Priority Metals (continued)							
Mercury	48	26	6	0.00077	0.00056	0.0002	0.0002
Nickel	48	31	31	0.425	0.39	0.017-0.02	0.04
Silver	48	30	23	0.101	0.0597	0.005	0.01
Zinc	48	47	75	355	27.9	0.01	0.02
Nonconventional Metals							
Aluminum	48	48	60	4.77	3.17	Not Applicable	0.2
Cobalt	48	22	6	0.153	0.103	0.009-0.011	0.05
Iron	48	48	98	2490	237	Not Applicable	0.1
Magnesium	48	48	40	213	28	Not Applicable	5
Manganese	48	48	90	59.7	11.1	Not Applicable	0.015
Molybdenum	48	45	58	0.56	0.255	6.04	0.006
Tin	48	41	33	0.412	0.18	0.002-0.005	0.03
Titanium	48	45	33	0.412	0.193	0.004	0.005
Vanadium	48	27	33	0.732	0.627	0.009-0.01	0.05
Priority Organic Pollutants							
Phenol	23	13	17	0.0747	0.024	0.01-0.0227	0.01

(a) Nonconventional pollutants other than nonconventional metals.

Table 7-24

Untreated Process Wastewater Characteristics for Pollutants of Concern Integrated and Stand-Alone Hot Forming Subcategory

Pollutant of Concern	Number of Times Analyzed	Number of Times Detected	Percentage of Samples Detected Greater Than 10x Minimum Level	Detected Concentrations (mg/L)		Detection Limit Range for Nondetects	Minimum Level
				Mean	Median		
Conventional Pollutants							
Oil and grease measured as hexane extractable material (HEM)	15	15	13	31.5	20.1	Not Applicable	5
Total suspended solids (TSS)	15	15	27	30.5	22	Not Applicable	4
Nonconventional Pollutants, Other (a)							
Ammonia as nitrogen	15	4	20	1.11	0.61	1	0.01
Chemical oxygen demand (COD)	15	15	73	72	63	Not Applicable	5
Fluoride	15	15	53	1.21	1.33	Not Applicable	0.1
Total petroleum hydrocarbons measured as silica gel treated-hexane extractable material (SGT-HEM)	15	12	Not Applicable	29.2	21.9	5.36-5.52	Not Applicable
Total organic carbon (TOC)	15	11	7	5.62	6.46	10	1
Priority Metals							
Antimony	15	9	0	0.00866	0.0081	0.004-0.02	0.02
Chromium	15	10	7	0.0371	0.0188	0.002-0.0022	0.01
Copper	15	10	0	0.0172	0.015	0.0012-0.002	0.025
Lead	15	5	0	0.0114	0.006	0.015-0.028	0.05
Nickel	15	9	0	0.0964	0.0934	0.004-0.007	0.04
Zinc	15	6	27	0.384	0.508	0.0028-0.004	0.02

Table 7-24 (Continued)

Pollutant of Concern	Number of Times Analyzed	Number of Times Detected	Percentage of Samples Detected Greater Than 10x Minimum Level	Detected Concentrations (mg/L)		Detection Limit Range for Nondetects	Minimum Level
				Mean	Median		
Nonconventional Metals							
Iron	15	15	80	14.1	6.42	Not Applicable	0.1
Manganese	15	15	20	0.0898	0.058	Not Applicable	0.015
Molybdenum	15	15	27	0.0646	0.034	Not Applicable	0.01
Titanium	15	1	0	0.0068	0.0068	0.0009-0.004	0.005

(a) Nonconventional pollutants other than nonconventional metals.

Table 7-25

Untreated Process Wastewater Characteristics for Pollutants of Concern Non-Integrated Steelmaking and Hot Forming Subcategory

Pollutant of Concern	Number of Times Analyzed	Number of Times Detected	Percentage of Samples Detected Greater Than 10x Minimum Level	Detected Concentrations (mg/L)		Detection Limit Range for Nondetects	Minimum Level
				Mean	Median		
Conventional Pollutants							
Oil and grease measured as hexane extractable material (HEM)	20	12	10	27.3	17.4	5-6.75	5
Total suspended solids (TSS)	20	18	50	81.4	51	4	4
Nonconventional Pollutants, Other (a)							
Ammonia as nitrogen	20	9	45	0.255	0.21	0.06-1	0.01
Chemical oxygen demand (COD)	20	20	85	157	90	Not Applicable	5
Fluoride	20	20	80	56.8	11.5	Not Applicable	0.1
Nitrate/nitrite	20	16	40	2.6	0.49	0.01-0.05	0.05
Total petroleum hydrocarbons measured as silica gel treated-hexane extractable material (SGT-HEM)	20	11	Not Applicable	18.8	10.3	5-6.75	Not Applicable
Total organic carbon (TOC)	20	20	70	37.8	26.1	Not Applicable	1
Priority Metals							
Antimony	20	14	20	0.0948	0.0188	0.002-0.02	0.02
Chromium	20	18	65	1.19	0.445	0.001	0.01
Copper	20	17	25	0.219	0.194	0.009-0.011	0.025
Lead	20	1	0	0.386	0.386	0.001-0.002	0.05
Nickel	20	18	70	1.62	0.783	0.028	0.04
Zinc	20	17	20	1.82	0.1	0.01	0.02

Table 7-25 (Continued)

Pollutant of Concern	Number of Times Analyzed	Number of Times Detected	Percentage of Samples Detected Greater Than 10x Minimum Level	Detected Concentrations (mg/L)		Detection Limit Range for Nondetects	Minimum Level
				Mean	Median		
Nonconventional Metals							
Aluminum	20	19	10	0.66	0.413	0.037	0.2
Boron	20	20	25	0.944	0.455	Not Applicable	0.1
Hexavalent Chromium	14	8	36	0.181	0.15	0.01	0.01
Iron	20	20	100	32.9	7.69	Not Applicable	0.1
Manganese	20	20	80	0.548	0.450	Not Applicable	0.015
Molybdenum	20	20	85	4.33	4.05	Not Applicable	0.01
Titanium	20	12	10	0.0325	0.0123	0.003-0.005	0.005
Priority Organic Pollutants							
Tribromomethane	18	3	6	0.11	0.0939	0.01	0.01

(a) Nonconventional pollutants other than nonconventional metals.

Note: EPA did not identify POCs for vacuum degassing because EPA did not sample non-integrated vacuum degassing operations during its sampling program. POCs identified for continuous casting and hot forming apply to vacuum degassing.

Table 7-26

Untreated Process Wastewater Characteristics for Pollutants of Concern Steel Finishing Subcategory

Pollutant of Concern	Number of Times Analyzed	Number of Times Detected	Percentage of Samples Detected Greater Than 10x Minimum Level	Detected Concentrations (mg/L)		Detection Limit Range for Nondetects	Minimum Level
				Mean	Median		
Conventional Pollutants							
Oil and grease measured as hexane extractable material (HEM)	112	72	32	4110	50.0	5-14.1	5
Total suspended solids (TSS)	110	97	63	2490	110	4	4
Nonconventional Pollutants, Other (a)							
Ammonia as nitrogen	110	76	69	15.6	1.31	0.1-1	0.01
Chemical oxygen demand (COD)	110	103	74	9890	213	5-20	5
Fluoride	110	108	55	185	1.5	0.3	0.1
Nitrate/nitrite	110	102	54	209	0.948	0.05-0.25	0.05
Total petroleum hydrocarbons measured as silica gel treated-hexane extractable material (SGT-HEM)	112	58	Not Applicable	1080	124	5-14.1	Not Applicable
Sulfate	109	103	Not Applicable	1110	84	2-10000	Not Applicable
Total organic carbon (TOC)	110	61	37	158	34	1-500	1
Total phenols	111	43	8	1.52	0.15	0.005-0.1	0.05
Priority Metals							
Antimony	112	65	5	0.077	0.0328	0.002-0.04	0.02
Arsenic	112	73	13	0.0489	0.0276	0.001-0.02	0.01
Cadmium	112	39	55	0.0849	0.0168	0.001-0.01	0.005
Chromium	112	104	63	221	0.359	0.009-0.01	0.01
Copper	112	98	49	1.99	0.430	0.008-0.1	0.025
Lead	112	88	12	2.38	0.0258	0.002	0.05

Table 7-26 (Continued)

Pollutant of Concern	Number of Times Analyzed	Number of Times Detected	Percentage of Samples Detected Greater Than 10x Minimum Level	Detected Concentrations (mg/L)		Detection Limit Range for Nondetects	Minimum Level
				Mean	Median		
Priority Metals (continued)							
Nickel	112	94	42	10.6	0.371	0.016-0.018	0.04
Selenium	112	15	3	0.0351	0.022	0.002-0.02	0.005
Zinc	112	104	63	40.3	0.309	0.008-0.01	0.02
Nonconventional Metals							
Aluminum	112	84	23	3.57	0.459	0.031-0.065	0.2
Barium	112	112	1	0.113	0.0313	Not Applicable	0.2
Boron	112	41	24	13.8	2.16	0.027-0.054	0.1
Cobalt	112	56	11	0.246	0.0635	0.009-0.12	0.05
Hexavalent chromium	84	24	17	9.03	5.2	0.01-0.1	0.01
Iron	112	112	96	1270	107.5	Not Applicable	0.1
Magnesium	112	111	9	24.8	10.8	0.073	5
Manganese	112	111	71	11.7	1.07	0.001	0.015
Molybdenum	112	99	29	0.428	0.0476	0.002-0.003	0.01
Tin	112	89	8	0.29	0.0417	0.002-0.03	0.03
Titanium	112	86	39	2.81	0.0595	0.003-0.005	0.005
Vanadium	112	62	9	0.314	0.061	0.007-0.01	0.05
Priority Organic Pollutants							
Bis(2-ethylhexyl)phthalate	94	6	2	0.301	0.0577	0.01-10	0.01
1,1,1-Trichloroethane	92	2	2	0.333	0.333	0.002-0.112	0.01
Ethylbenzene	92	5	5	0.565	0.298	0.002-0.01	0.01
Naphthalene	94	6	6	0.624	0.230	0.01-10	0.01

Table 7-26 (Continued)

Pollutant of Concern	Number of Times Analyzed	Number of Times Detected	Percentage of Samples Detected Greater Than 10x Minimum Level	Detected Concentrations (mg/L)		Detection Limit Range for Nondetects	Minimum Level
				Mean	Median		
Priority Organic Pollutants (continued)							
Phenol	94	4	2	0.161	0.120	0.01-10	0.01
Toluene	92	3	1	0.0587	0.0156	0.002-0.01	0.01
Nonconventional Organic Pollutants							
alpha-Terpineol	94	2	2	0.664	0.664	0.01-10	0.01
Benzoic acid	94	11	9	7.23	1.33	0.05-50	0.05
2,6-Di-tert-butyl-p-benzoquinone	94	10	1	0.397	0.258	0.099-99	0.099
Hexanoic acid	94	13	6	0.171	0.0776	0.01-10	0.01
2-Methylnaphthalene	94	5	1	0.0874	0.0692	0.01-10	0.01
m-Xylene	35	5	11	0.459	0.232	0.002-0.01	0.01
n-Docosane	94	8	4	0.305	0.246	0.01-10	0.01
n-Dodecane	94	14	5	1.69	0.051	0.01-1	0.01
n-Eicosane	94	15	13	1.34	0.133	0.01-1	0.01
n-Hexadecane	94	14	14	6.85	0.193	0.01-1	0.01
N,N,-Dimethylformamide	94	3	3	0.125	0.119	0.01-10	0.01
n-Octadecane	94	16	14	3.26	0.132	0.01-1	0.01
n-Tetracosane	94	9	6	0.155	0.181	0.01-10	0.01
n-Tetradecane	94	12	3	2.94	0.0368	0.01-1	0.01
o- + p-Xylene	35	5	11	0.245	0.129	0.002-0.01	0.01
2-Propanone	92	27	11	1.02	0.369	0.00998-0.05	0.05

Table 7-26 (Continued)

Pollutant of Concern	Number of Times Analyzed	Number of Times Detected	Percentage of Samples Detected Greater Than 10x Minimum Level	Detected Concentrations (mg/L)		Detection Limit Range for Nondetects	Minimum Level
				Mean	Median		
Other Priority Pollutants							
Total cyanide (b)	Not available	Not available	Not available	Not available	Not available	Not available	Not available

(a) Nonconventional pollutants other than nonconventional metals and nonconventional organic pollutants.
(b) EPA did not analyze for cyanide in finishing wastewaters; however, EPA selected cyanide as a POC for the finishing subcategory because it may be present in reducing salt bath descaling wastewaters.

Note: EPA did not identify POCs for stand-alone continuous annealing because EPA did not sample annealing quenching operations during its sampling program. POCs identified for the other finishing processes apply to continuous annealing.

Table 7-27

Untreated Process Wastewater Characteristics for Pollutants of Concern Other Operations Subcategory - Direct-Reduced Ironmaking Segment

Pollutant of Concern	Number of Times Analyzed	Number of Times Detected	Percentage of Samples Detected Greater Than 10x Minimum Level	Detected Concentrations (mg/L)		Detection Limit Range for Nondetects	Minimum Level
				Mean	Median		
Conventional Pollutants							
Oil and grease measured as hexane extractable material (HEM) (a)	ND	ND	ND	ND	ND	ND	ND
Total suspended solids (TSS)	1	1	100	450	450	Not Applicable	4
Nonconventional Pollutants, Other (b)							
Ammonia as nitrogen	1	1	0	13.9	13.9	Not Applicable	0.01
Chemical oxygen demand (COD)	1	1	100	68	68	Not Applicable	5
Fluoride	1	1	100	14.2	14.2	Not Applicable	0.1
Total petroleum hydrocarbons measured as silica gel treated-hexane extractable material (SGT-HEM) (a)	ND	ND	ND	ND	ND	ND	ND
Nonconventional Metals							
Aluminum	1	1	100	8.18	8.18	Not Applicable	0.2
Iron	1	1	100	112	112	Not Applicable	0.1
Manganese	1	1	100	3.77	3.77	Not Applicable	0.015
Titanium	1	1	100	0.0839	0.0839	Not Applicable	0.005

(a) Oil and grease measured as hexane extractable material (HEM) and total petroleum hydrocarbons measured as silica gel treated-hexane extractable material (SGT-HEM) were not detected in DRI wastewaters; however, EPA considers HEM and SGT-HEM to be POCs for all iron and steel industry wastewaters.
(b) Nonconventional pollutants other than nonconventional metals.

ND - Not detected.

SECTION 8

POLLUTION PREVENTION AND WASTEWATER TREATMENT TECHNOLOGIES

This section describes the pollution prevention and wastewater treatment technologies that are used by the iron and steel industry to prevent the generation of wastewater pollutants or reduce the discharge of wastewater pollutants. EPA considered various combinations of these technologies as the basis for the effluent limitations and guidelines and standards evaluated for the final rule for the iron and steel industry. To evaluate these technologies, EPA developed a database of the following:

- In-process technologies and process modifications;
- Process water recycle technologies;
- Process wastewater discharge flow rates;
- End-of-pipe wastewater treatment technologies; and
- Treated process wastewater effluent quality.

EPA collected most data from industry surveys, analytical and production surveys, and the EPA wastewater sampling programs. The Agency also used other data sources, such as industry trade journals, online databases, and other publications. Section 3 describes these sources.

The processes used in manufacturing steel products use a significant amount of water, as described in Section 7. Common pollutants found in iron and steel wastewater include: scale; metal fines and dissolved metals; oil and grease; suspended solids; organic compounds such as benzo(a)pyrene, naphthalene, and total phenols; and inorganic pollutants such as ammonia, cyanide, and nitrates/nitrites. Consequently, the iron and steel industry uses wastewater minimization, pollution prevention, and wastewater treatment technologies to reduce both water use and pollutant discharge loadings for these pollutants of concern. These technologies achieve these reductions by retarding pollutant buildup and improving water quality to allow greater reuse; reducing the volume of wastewater treated and discharged; prolonging process bath life, enabling sites to spend less on process bath makeup and reduce bath treatment and disposal costs; and improving treated effluent quality by enhanced wastewater treatment.

Iron and steel facilities use a wide variety of technologies to treat wastewater generated on site and for pollution prevention. The technologies are grouped into the following four categories, as discussed in this section:

- Section 8.1 - Wastewater Minimization and Pollution Prevention Technologies;
- Section 8.2 - Process Modifications;
- Section 8.3 - Treatment Technologies; and
- Section 8.4 - Best Management Practices.

Table 8-1 summarizes the various technologies discussed in Sections 8.1 and 8.2, as well as the applicable subcategories for each technology. Table 8-2 summarizes the various wastewater treatment and sludge handling technologies discussed in Section 8.3, as well as the applicable subcategories for each technology.

8.1 Wastewater Minimization and Pollution Prevention Technologies

This section discusses the following various types of waste minimization and pollution prevention technologies:

- Section 8.1.1 - High-Rate Recycle;
- Section 8.1.2 - Countercurrent Cascade Rinsing;
- Section 8.1.3 - Acid Reuse, Recycle, and Recovery;
- Section 8.1.4 - Extension of Process Solution Life; and
- Section 8.1.5 - Evaporation with Condensate Recovery.

8.1.1 High-Rate Recycle

High-rate recycle systems consist of a water recirculation loop that recycles approximately 95 percent or more of the water from a process for reuse. High-rate recycle systems are commonly used in the iron and steel industry for product cooling and cleaning, as well as for air pollution control, in the following iron and steel operations: blast furnace ironmaking, sintering, basic oxygen furnace (BOF) steelmaking, vacuum degassing, continuous casting, and hot forming operations. Virtually all systems require a portion of the recirculated water to be continuously discharged (blowdown) to prevent contaminants from accumulating. This blowdown stream is then treated at an end-of-pipe treatment system or discharged to surface water or a publicly owned treatment works (POTW). Well-designed and operated high-rate recycle systems can significantly reduce the volume of wastewater discharged and the amount of fresh water added to the system as makeup by maximizing the recycle rate.

Various physical/chemical treatment technologies are used within high-rate recycle systems, such as solids removal devices, cooling devices, and water softening technologies, to improve water quality prior to reuse. Improved water quality allows recycle rates to significantly increase, which in turn allows blowdown rates and pollutant loadings discharged to significant decrease. Common pollutants in iron and steel wastewater from the operations listed above include: total suspended solids (TSS), oil and grease (O&G), ammonia, cyanide, organic compounds such as phenols, and metals; recycle loop treatment systems are designed to remove these pollutants. Recycle system treatment technologies commonly used for each process operation are listed below. Section 8.3 provides additional information regarding the design, operation, and performance of each treatment unit.

Specific treatment and water cooling units commonly included in high-rate recycle systems differ from operation to operation. Blast furnace ironmaking and sintering operations commonly use clarification to remove solids. Additionally, blast furnace ironmaking high-rate recycle systems also use cooling towers to control temperature prior to recycle. Wet-

open and wet-suppressed BOF steelmaking high-rate recycle systems use classifiers and clarifiers to remove solids, followed by cooling towers prior to recycle. These BOF systems can also use carbon dioxide injection to remove hardness from the wastewater, thus minimizing scale accumulation, which reduces blowdown requirements. Typical vacuum degassing high-rate recycle systems consist of clarifiers and cooling towers prior to recycle, with blowdown treated individually or with commingled blowdown from continuous caster and/or BOF steelmaking recycle systems. Typical continuous casting high-rate recycle systems include a primary scale pit followed by a clarifier for additional solids removal. The clarifier may be followed by a polishing filter. Most of the continuous casting wastewater is then cooled and recycled. Typical components of hot forming high-rate recycle systems are scale pits with oil skimming, clarification or filtration to remove additional O&G and solids, and cooling towers prior to recycle.

In summary, high-rate recycle systems allow approximately 95 percent or more of process wastewater to be recycled, which significantly reduces makeup water requirements and process wastewater discharge flow rates. Recycle loop water treatment enables sites to further increase recycle rates by improving recycle water quality and reducing blowdown requirements. Well-designed and operated high-rate recycle systems are an important component of EPA's technology options considered for the final rule, as discussed in Section 9, because they reduce both the volume of process wastewater discharged and the loading of pollutants of concern in iron and steel wastewater.

8.1.2 Countercurrent Cascade Rinsing

Countercurrent cascade rinsing refers to a series of consecutive rinse tanks that are plumbed to cause water to flow from one tank to another in the direction opposite of the product flow. Fresh water flows into the rinse tank located farthest from the process tank and overflows (i.e. cascades), in turn, to the rinse tanks closer to the process tank. This technique is called countercurrent rinsing because the product and the rinse water move in opposite directions. Over time, the first rinse becomes contaminated with drag-out solution and reaches a stable concentration that is lower than the process solution. The second rinse stabilizes at a lower concentration, which enables less rinse water to be used than if only one rinse tank were in place. The more countercurrent cascade rinse tanks (three-stage, four-stage, etc.), the less rinse water is needed to adequately remove the process solution. This differs from a single, once-through rinse tank where the rinse water is composed of fresh water that is discharged after use without any recycle or reuse.

The rinse flow rate needed to adequately dilute drag-out solution depends on the concentration of process chemicals in the initial process bath, the concentration of chemicals that can be tolerated in the final rinse tank to meet product specifications, the amount of drag-out carried into each rinse stage, and the number of countercurrent cascade rinse tanks. These factors are expressed in Equation 8-1 below:

$$V_r = \left(\frac{C_o}{C_f}\right)^{1/n} \times V_D \qquad (8\text{-}1)$$

where:

V_r	=	Flow through each rinse stage, gal/min;
C_o	=	Concentration of the contaminant(s) in the initial process bath, mg/L;
C_f	=	Tolerable concentration of the contaminant(s) in the final rinse to give acceptable product cleanliness, mg/L;
n	=	Number of rinse stages used; and
V_D	=	Drag-out carried into each rinse stage, expressed as a flow, gal/min.

This mathematical rinsing model is based on complete rinsing (i.e., removal of all contaminants from the product) and complete mixing (i.e., homogeneous rinse water in each rinse stage). Under these conditions, each additional rinse stage can reduce rinse water use by 90 percent. These conditions are not achieved unless there is sufficient residence time and agitation to obtain complete mixing in the rinse tank. For less efficient rinse systems, each added rinse stage reduces rinse water use by 50 to 75 percent.

Countercurrent cascade rinsing systems have a higher capital cost than once-through rinsing systems and require more space due to the additional rinse tanks. Also, in countercurrent cascade rinsing, the relatively low flow rate through the rinse tanks may not provide the needed agitation for drag-out removal. In such cases, air or mechanical agitation may be required to increase rinsing efficiency.

Countercurrent cascade rinsing is used in steel finishing operations, including acid pickling, alkaline cleaning, electroplating, and hot dip coating. Unlike intermediate steel processing steps, such as continuous casting and hot forming, steel finishing operations require the steel to be relatively contaminant-free for processing. For this reason, high-rate recycle systems do not provide adequate water quality for steel finishing operations. For those steel finishing operations that can tolerate low levels of contaminants introduced by rinse water, countercurrent cascade rinsing provides effective rinsing while also minimizing fresh water requirements and wastewater discharge flow rates.

8.1.3 Acid Reuse, Recycle, and Recovery Systems

Acid reuse, recycle, and recovery systems are used extensively in the industry at sites that perform acid pickling. Virtually all sites use fume scrubbers to capture acid gases and prevent acid gas emissions. Many facilities also recover spent acid to reduce makeup acid requirements and to reduce spent acid treatment and/or disposal costs. Typical industrial acid

reuse and recovery systems include fume scrubbers, hydrochloric acid regeneration, sulfuric acid recovery, and acid purification. These technologies are described below.

Fume Scrubber Water Recycle

The steel finishing industry commonly uses fume scrubbers to capture acid gases from pickling tanks. Scrubber water, which may contain a dilute caustic solution, is neutralized and continuously recirculated to adsorb acid. Makeup water is added to replace water lost through evaporation and water that is blown down to end-of-pipe metals treatment. Blowdown is necessary to prevent salts buildup. Fume scrubber recirculation systems significantly reduce the volume of scrubber water discharged to wastewater treatment.

Hydrochloric Acid Regeneration

This process used in steel finishing operations consists of thermal decomposition of spent pickle liquor, which contains free hydrochloric acid, ferrous chloride, and water. The liquor is heated to remove some of the water through evaporation and to concentrate the solution. The concentrated solution is then further heated at 925°C to 1,050°C in a "roaster." At this temperature, water is completely evaporated and the ferrous chloride decomposes into iron oxide (ferric oxide, Fe_2O_3) and hydrogen chloride (HCl) gas. Equation 8-2 below shows the decomposition process:

$$4\ FeCl_2 + 4\ H_2O + O_2 \text{----->} 8\ HCl + 2\ Fe_2O_3 \qquad (8\text{-}2)$$

The iron oxide is separated and removed from the system for off-site recovery or disposal. The hydrogen chloride gas is reabsorbed in water (sometimes rinse water or scrubber water is used), to produce hydrochloric acid solution (generally from 15 to 21 percent HCl), which is reused in the pickling operation. There are several types of "roaster" processes in operation. The basic differences among the processes are the design and operation of the roaster/reactor and the recovery equipment (Reference 8-1).

Sulfuric Acid Recovery

To recover sulfuric acid in steel finishing operations, spent pickle liquor high in iron content is pumped into a crystallizer, where the iron is precipitated (under refrigeration or vacuum) as ferrous sulfate heptahydrate crystals. As the crystals are formed, water is removed with the crystals, and the free acid content of the solution increases to a level that is useable in the pickling operation. The crystals are separated from solution, and the recovered acid is pumped back into the pickling tank. The by-product ferrous sulfate heptahydrate is commercially marketable. The crystals are dried, bagged, and marketed, or sold in bulk quantities. Ferrous sulfate, commonly referred to as "copperas," is used in appreciable quantities in numerous industries, including the manufacture of inks, dyes, paints, fertilizers, and magnetic tapes. It is also used as a coagulant in water and wastewater treatment (Reference 8-1).

Acid Purification and Recycle

Acid purification technology is used to process various acid pickling solutions, such as sulfuric acid and nitric/hydrofluoric acids used in stainless steel finishing mills. Acid is purified by adsorption on a bed of alkaline anion exchange resin that separates the acid from the metal ions. Acid is desorbed from the resin using water. The process begins by passing spent acid upward through the resin. A metal-rich, mildly acidic solution passes through the resin and is collected at the top of the bed. Water is then pumped downward through the bed and desorbs the acid from the resin. The purified acid solution is collected at the bottom of the bed. When the acid is effectively purified, it is withdrawn from the bed and recycled back to the process. Acid purification and recycle reduces nitrate discharges and the overall volume of acid pickling wastewater discharged because spent acid is not discharged to wastewater treatment. This technology can theoretically recover approximately 80 percent of the free acid remaining in a spent acid treatment solution; however, industrial experience with acid purification systems have not yielded the predicted recovery rate. EPA received comments on the proposed rule indicating that acid purification units reduce nitric acid consumption by as little as 12 percent.

8.1.4 Extension of Process Solution Life

Prolonging solution life reduces the investment in additional process solutions and time spent replacing spent process solutions. Iron and steel facilities use filtration, magnetic separation, and ion exchange technologies to extend process solution life. Filtration and magnetic separation technologies are described below while ion exchange is described in Section 8.3.1.

In-Tank Filtration

Steel finishing electroplating and alkaline cleaning operations use in-tank filters to extend process bath life by removing contaminants in the form of suspended solids. Recirculating cold forming operations also use filters to remove contaminants from the rolling solution. Paper, cloth, or plastic filters remove accumulated suspended solids or precipitant. Solids are usually disposed of off site. Devices such as granular activated carbon filters remove dissolved contaminants, such as organic constituents.

Magnetic Separation of Fines in Cold Rolling Solution

Magnetic separators are sometimes used in the iron and steel industry to extend the life of cold rolling solutions. Magnetic separators are installed in either rolling solution collection tanks or in a side-stream system connected to these tanks. The most effective systems use vertical or horizontal configurations of magnetic rods to remove metal fines. Well-designed magnetic separators can control the iron content in the rolling solutions to below 100 parts per million (Reference 8-2). Solids are usually shipped offsite for disposal.

8.1.5 Evaporation with Condensate Recovery

Evaporation is a wastewater minimization technology that steel finishing mills can use to recover electroplating chemicals such as chrome, nickel, and copper that are lost to electroplating rinse water. There are two basic types of evaporators: atmospheric and vacuum. Atmospheric evaporators, the more prevalent type, are relatively inexpensive to purchase and easy to operate. Vacuum evaporators are mechanically more sophisticated and are more energy-efficient. Vacuum evaporators are typically used when evaporation rates greater than 50 to 70 gallons per hour are required. Additionally, with vacuum evaporators, evaporated water can be recovered as a condensate and reused on site.

Electroplating rinse water is evaporated to concentrate drag-out metals. The resulting concentrated solution of these metals is then returned to the process bath. A disadvantage of evaporation-based recovery is that, in addition to drag-out, unwanted contaminants are returned to and accumulate in the electroplating process bath. For this reason, deionized water is preferred as rinse water to prevent introducing contaminants from the rinse water in the process bath. Another disadvantage of evaporation is that the process is energy-intensive, which may make evaporation cost prohibitive for some applications.

8.2 Process Modifications

Process modifications can reduce or eliminate wastewater generation at a facility. EPA identified three process modification technologies for use with acid pickling processes. Although the Agency is not aware of significant domestic use of these technologies, all are effectively used by foreign steel facilities. These technologies, effluent-free pickling with acid regeneration, nitric-acid-free pickling, and effluent-free exhaust cleaning, are described below. Table 8-1 summarizes the various technologies discussed in Section 8.2 as well as the applicable subcategories for each technology.

8.2.1 Effluent-Free Pickling Process with Fluid Bed Hydrochloric Acid Regeneration

This pickling process is operated such that no wastewater is discharged as spent pickle liquor, rinse wastewater, and scrubber water from a hydrochloric acid pickling line. The process is configured as a closed system that uses a fluidized bed reactor "roaster" configuration (hydrochloric acid regeneration is explained in detail above) to thermally decompose spent pickle liquor to hydrochloric acid and iron oxide (Reference 8-3). Figure 8-1 illustrates the fluidized bed acid regeneration system.

Spent pickle liquor is fed via a settling tank and venturi loop into the fluidized bed inside the reactor. The fluidized bed consists of granulated iron oxide. Residual acid and water are evaporated at 850°C and the iron chloride is converted to hydrochloric acid gas. Growth and new formation of iron oxide grains in the fluidized bed are controlled so that a dust-free granulated product is obtained. The iron oxide grains can be used as a raw material to

manufacture other products (e.g., as an additive for the production of magnetic tapes, abrasives, tiles, glass, cosmetics and pigments).

Since the fluidized bed process operates at approximately 850°C, rinse and scrubber water from the pickle line can be used at the regeneration plant to cool fluidized bed off-gases, which contain hydrochloric acid vapor and a small amount of iron oxide dust. The off-gases are cooled to approximately 100°C in a venturi scrubber. The thermal energy of the off-gases is used to concentrate the pickling liquor by evaporation before it is fed to the reactor. From the venturi scrubber, the cooled gas stream goes to the absorber, where hydrogen chloride is absorbed with rinse water from the pickling line and fresh water to produce hydrochloric acid. The acid can be recycled directly to the pickling process or placed in a storage tank for later use. Once the fluidized bed off-gases have passed through the scrubbing stages and mist collector, the off-gases are virtually free of hydrochloric acid and are released to the atmosphere.

8.2.2 Nitric-Acid-Free Pickling

Nitrate is a pollutant of concern for stainless steel acid pickling operations where nitric acids and combinations of nitric and hydrofluoric acids are used as surface treatments for various grades of stainless steels. Nitric-acid-free pickling requires the same equipment as conventional acid pickling processes, as well as agitating the bath to circulate fresh acid to the metal surface. The process is also compatible with acid regeneration. The Agency is aware of a proprietary commercial technology that uses a nitric-acid-free solution that contains an inorganic mineral acid base, hydrogen peroxide, stabilizing agents, wetting agents, brighteners, and inhibitors. See DCNs IS04072 and IS04075 in Section 5.5.1 of the Iron and Steel Rulemaking Record for more information.

8.2.3 Effluent-Free Exhaust Cleaning

Stainless steel pickling operations using mixed acid, nitric acid, or hydrofluoric acid produce exhaust gases that contain nitrogen oxide and hydrogen fluoride. Wet air pollution control (WAPC) devices are typically used to treat these exhaust gases, thereby generating wastewater. The Agency is aware of steel finishing mills that operate a commercially available technology that uses selective catalytic reduction (SCR) technology to treat exhaust gases from stainless steel pickling operations in lieu of WAPCs (Reference 8-4). The SCR system injects anhydrous ammonia into the gas stream prior to a catalyst to reduce NO_x to nitrogen and water. The most common types of catalysts are either a metal oxide, noble metal, or zeolite.

8.3 Treatment Technologies

This section discusses the following wastewater treatment technologies used at iron and steel facilities for recycle system water treatment prior to recycle and reuse, and/or end-of-pipe wastewater treatment prior to discharge to surface water or a POTW:

- Section 8.3.1 - Physical/Chemical Treatment;
- Section 8.3.2 - Biological Treatment; and
- Section 8.3.3 - Sludge Handling.

Table 8-2 summarizes the wastewater treatment and sludge handling technologies discussed in this section, as well as the applicable subcategories for each technology.

8.3.1 Physical/Chemical Treatment

The iron and steel industry extensively uses physical/chemical treatment technologies. Physical/chemical treatment can effectively remove iron and steel pollutants such as TSS, O&G, heavy organics (tars), ammonia, cyanide, and metals. Physical/chemical treatment is not effective in treating dissolved organic and inorganic compounds. The physical/chemical treatment technologies are described in the following order:

- Equalization;
- Tar Removal;
- Free and Fixed Ammonia Stripping;
- Cooling Technologies;
- Cyanide Treatment Technologies;
- Oily Wastewater Treatment Technologies;
- Carbon Dioxide Injection;
- Metals Treatment Technologies;
- Solids Separation Technologies; and
- Polishing Technologies.

Equalization

Equalization is a critical treatment component in achieving consistent wastewater treatment performance for end-of-pipe treatment systems. Equalization dampens fluctuations (reduces variability) in flow and influent wastewater quality. Equalization also eliminates shock loadings of inhibitory substances that would decrease treatment system efficiency and performance. Key design parameters for equalization are the required tank volume (i.e. wastewater residence time) and adequate mixing to enhance wastewater homogeneity. Two types of mixing are typically used in equalization systems: conventional top or side-mount impeller mixers and a pump system that continuously removes a portion of the wastewater from the tank and reintroduces it into the untreated wastewater flow.

Constant solids loading can improve the effluent quality and thickening performance of clarifiers. Equalization improves the performance of chemical precipitation systems as a result of improved chemical feed control and process reliability. Eliminating rapid flow increases to gravity clarification equipment lessens the chance of disrupting the sludge bed. For multimedia filtration systems, equalization results in a constant media filtration surface area requirement and more uniform filter-backwash cycles. Equalization prior to biological treatment dampens flow fluctuations to prevent a 'wash out' of the microorganisms. Equalization also

prevents shock loadings of compounds that are toxic to the microorganisms. Iron and steel facilities typically operate equalization systems to simultaneously achieve both flow and chemical equalization.

Tar Removal

Tar decanters are used to recover oil and tar. The decanter is a rectangular steel tank, which is inclined at one end for solids removal. The tar and process liquor mixture enter the decanter and flow into a trough, which minimizes agitation of the mixture. The mixture then overflows to the main compartment where the velocity is reduced to allow the tar to separate from the process liquor and settle. The process liquor flows over a fixed weir to leave the decanter, while the tar is removed from the bottom of the decanter through an adjustable seal, the decanter valve. An optional mechanical filter can be placed on the tar decanter effluent to further separate residual tar and oil from the process liquor. The multiple tube filter uses a filter element made from porous aluminum oxide ceramic that can remove particulate as fine as 0.3 microns with flow rates of approximately 2 gallons per minute per square foot (gal/min/ft^2). At the end of each filtration cycle, collected solids are removed from the filter by backwashing. Removing the large-chained organic compounds that comprise tar significantly reduces the carbonaceous biochemical oxygen demand ($CBOD_5$).

The iron and steel industry uses this treatment technology to treat the excess ammonia liquor generated during cokemaking operations. It separates tar and oil from the liquor, which is generally further treated in an ammonia stripping system.

Free and Fixed Ammonia Stripping

Free and fixed ammonia distillation, also referred to as stripping, involves transferring gas (ammonia) dissolved in a liquid (wastewater) into a gas stream (steam). When ammonia is present in both a free (NH_3) and fixed form (NH_4^+), two stages or 'legs' are necessary for optimal removal efficiency. Figure 8-2 depicts an ammonia distillation column. The illustration shows both a free and fixed leg in one column. This configuration is common, but the industry also commonly uses two separate columns, one for each leg.

In the free leg, ammonia-rich liquor is pumped to the top of a tray-type distillation tower, also referred to as a still, and steam is injected into the base. As the rising steam passes through the boiling ammonia liquor moving down the tray tower, free ammonia is transferred from the liquid to the gas phase, eventually passing out the top of the tower. The hot, ammonia-rich steam is collected, cooled, and typically treated with sulfuric acid to form ammonium sulfate, a by-product that can be shipped off site for use as a fertilizer. Liquid collected from the bottom of the free leg is mixed either in a mix tank or inline with a basic solution, such as sodium hydroxide or soda ash, to raise the pH prior to the fixed leg. This step converts fixed ammonia to free ammonia as shown in the following equation:

$$NH_4^+ + NaOH \text{ ----> } NH_3 + H_2O + Na^+ \qquad (8\text{-}3)$$

The fixed leg then removes the converted ammonia in the same manner as the free leg. Liquid from the bottom of the fixed leg is cooled and transferred to a holding tank prior to further on-site treatment to remove any residual ammonia, or before discharge to a POTW.

Ammonia stripping also removes cyanide, phenols, and other volatile organic compounds (VOCs) typically found in cokemaking wastewater. Free cyanide, a component of total cyanide, is removed in the free leg, while VOCs, including phenols, are removed in both the free and fixed legs.

Based on data from EPA's iron and steel sampling program, well-operated ammonia distillation systems can remove approximately 99 percent of the ammonia from the waste stream. Additionally, the sampling data show typical removals of total cyanide and phenols of approximately 98 and 26 percent, respectively. The data also indicate other VOCs, found at low concentrations in the influent to the still, are removed to near or below the detection limit. The efficiency of the distillation tower is related to the number of trays (transfer units) that the liquid must pass over before reaching the bottom. Therefore, the higher the tower, the more trays and the greater the ammonia removal efficiency. The tower diameter is a function of the flow rate to the system. Spent ammonia liquor flows reported in industry surveys range from 30 to 360 gallons per minute (gpm). Ammonia distillation towers in the cokemaking industry typically range in height from 30 feet to over 100 feet, contain 20 to 30 trays, and have diameters ranging between 4 and 8 feet.

Cooling Technologies

Cooling technologies are used to attain water temperatures appropriate to facilitate end-of-pipe treatment and for reuse in high-rate recycle systems. Blast furnace, vacuum degassing, continuous casting, and hot forming operations use cooling methods in recirculation systems. By-product recovery cokemaking plants also commonly use cooling prior to biological treatment systems to prevent water temperatures detrimental to biomass.

- ***Cooling Towers.*** Cooling towers allow for temperature control for recycle process waster. Counterflow induced draft cooling towers are common in the iron and steel industry. The counterflow arrangement is superior to the cross-flow tower for greater cooling ranges (Reference 8-5). Performance of a given cooling tower is governed by the ratio of the weights of air to water and the time of contact between water and air. The time of contact is governed largely by the time required for the water to discharge from the nozzles and fall through the tower to the basin. The time of contact is therefore obtained in a given type of unit by varying the height of the tower. Figure 8-3 illustrates a typical cooling tower. Cooling towers are also used in end-of-pipe treatment systems. Cooling towers used in ironmaking and steelmaking treatment systems cool 100-130°F water to approximately 75-85°F.

- ***Shell-and-Tube Heat Exchangers.*** This is an indirect contact device that facilitates the transfer of heat from one fluid stream to another. Counterflow, shell-and-tube heat exchangers are common in the iron and steel industry. Liquid to be cooled or heated is pumped through tubes that run the length of the heat exchanger's shell while another liquid to be cooled or heated is pumped through the shell and passes over the tubes. Baffles placed along the shell direct the flow in the shell over the tubes to promote turbulence and support tubes in horizontal units. Heat exchangers cool cokemaking wastewater from approximately 150-200° F to under 100°F prior to biological treatment.

Cyanide Treatment Technologies

Several treatment technologies are available and demonstrated to treat cyanide-containing wastewater and are used either as cyanide pretreatment or as a wastewater polishing step. In biological treatment, many microorganisms can acclimate to relatively high concentrations of cyanides and have been documented to successfully treat wastewater with cyanide concentrations up to 30 mg/L (Reference 8-6). However, in these cases, cyanide-containing wastewater is typically treated to remove cyanide as add-ons to biological treatment. Cyanide treatment technologies used by or applicable to the iron and steel industry are described below.

- ***Alkaline and Breakpoint Chlorination.*** Alkaline chlorination is used to destroy cyanide, and to a lesser extent, ammonia, and phenolics in wastewater. Alkaline chlorination uses sodium hypochlorite or chlorine gas in a carefully controlled pH environment to remove cyanide and ammonia; however, the system is operated to optimize cyanide removal at the expense of ammonia removal. The process oxidizes cyanide to bicarbonate and nitrogen gas, and ammonia to nitrogen gas, hydrochloric acid, and water, as illustrated by the following chemical reactions (Reference 8-6):

  Cyanide:

$$CN^- + OCl^- \text{ ----> } CNO^- + Cl^- \qquad (8\text{-}4)$$

$$CNO^- + 1.5OCl^- \text{ ----> } HCO_3^- + 1/2N_2 + 1.5Cl^- + 1/2H^+ \qquad (8\text{-}5)$$

  Ammonia:

$$2NH_4^+ + 3HOCl \text{ ----> } N_2 + 3H_2O + 3HCl + 2H^+ \qquad (8\text{-}6)$$

  The equipment consists of two reaction tanks, each with an agitator and a pH and oxidation-reduction potential (ORP) controller. The first step (tank 1) of the reaction oxidizes cyanides to cyanate. To effect the

reaction, sodium hypochlorite or chlorine is metered into the reaction tank as necessary to maintain the ORP at 350 to 400 millivolts, and aqueous sodium hydroxide is added to maintain a pH of 10 to 11. This pH dictates that most of the cyanide exists in the CN^- form, rather than as the highly toxic hydrogen cyanide (HCN) form. In the second step (tank 2), the ORP and the pH level are maintained at 600 millivolts and 8 to 9, respectively, to oxidize cyanate to carbon dioxide and nitrogen. Each step has an agitator designed to provide approximately one turnover per minute.

Alkaline chlorination can be performed at ambient temperature, can be automatically controlled, and is capable of reducing effluent levels of cyanide to below detection. However, the reaction must occur at carefully controlled pH levels and has the possibility of chemical interferences when treating mixed wastes. Cyanide readily forms complexes with a number of metals, including zinc, iron, nickel, and cadmium, which are frequently found in iron and steel wastewater. These complexes reduce the effectiveness of alkaline chlorination treatment. Therefore, the effectiveness of the unit depends on the pretreatment and segregation of cyanide waste streams and the careful control of pH. The size and type of system solely depends on the cyanide waste stream flow volume (See Section 14.5 of the Iron and Steel Administrative Record for additional information regarding sizing of alkaline chlorination systems). In addition to wastewater segregation and careful pH control, another disadvantage of alkaline chlorination is that oxidation of organic compounds using chlorine has the potential to form trihalomethanes. Additionally, there are several safety concerns associated with the handling of chlorine gas and with the gas feed systems. This technology can be used to treat cyanide from by-product recovery cokemaking, blast furnace, and sintering operations.

Breakpoint chlorination is similar to alkaline chlorination in terms of equipment and controls, but distinctly different in terms of the operating pH (7 to 8) and the targeted pollutant (ammonia). Breakpoint chlorination is operated to optimize ammonia removal at the expense of cyanide removal, although incidental removals of cyanide and phenols will occur. Breakpoint chlorination uses the same treatment chemicals (chlorine or sodium hypochlorite) as alkaline chlorination, and the ammonia and cyanide chemical reactions are the same as those shown in Equations 8-4 through 8-6. Advantages of breakpoint chlorination are that treatment can be performed at ambient temperature, can be automatically controlled, and is capable of reducing effluent levels of ammonia to below detection. Disadvantages include an increase in dissolved solids of the wastewater and the potential for oxidation of organic compounds to form trihalomethanes, which are suspected carcinogens. Additionally, there are several safety concerns associated with the handling of chlorine gas and

with the gas feed systems. Breakpoint chlorination can be used to treat both cokemaking and blast furnace ironmaking wastewater.

- ***Cyanide Precipitation.*** Cyanide precipitation combines cyanide in wastewater with iron to form an insoluble iron-cyanide complex that can be precipitated and removed by gravity settling. The process is illustrated by the following chemical reaction:

$$3CN^- + Fe^{+3} \text{ ----> } FeCN_3 \qquad (8\text{-}7)$$

Excess iron is typically added as ferric sulfate ($Fe_2(SO_4)_3$) and the pH is adjusted to approximately 4.5 using sulfuric acid to optimize cyanide precipitation. Following complex formation, polymer is added to flocculate the iron-cyanide particulates, allowing them to settle in a gravity clarifier. Effluent from the gravity clarifier can be adjusted to a neutral pH prior to discharge, or the pH can be raised to approximately 9 to precipitate any residual metals. Industry survey data indicate that cyanide precipitation systems coupled with multimedia filtration can achieve effluent cyanide concentrations of approximately 1 mg/L. The iron and steel industry uses a proprietary cyanide precipitation technology to treat cokemaking wastewater.

- ***Ozone Oxidation.*** Cyanide removal can be accomplished through ozone oxidation. Ozone gas is bubbled through a wastewater solution containing cyanide. A portion of the ozone in the gas phase is transferred to the liquid where it reacts with cyanide, converting it to cyanate. Additional ozone reacts with the cyanate for complete conversion to nitrogen gas, ammonia, and bicarbonate as shown by the reactions below:

$$CN^- + O_3 \text{ ----> } CNO^- + O_2 \qquad (8\text{-}8)$$

$$3CNO^- + 2O_3 + 2OH^- + 2H_2O \text{ ----> } 3HCO_3^- + NH_3 + N_2 + 2O_2 \qquad (8\text{-}9)$$

The reaction rate is limited by mass-transfer of ozone to the liquid, the cyanide concentration, and temperature (Reference 8-7). Ozone is not effective in treating metallocyanide complexes, such as ferrocyanide, unless ultraviolet light is added to the reaction vessel. Ozone also oxidizes other iron and steel pollutants of concern, such as ammonia and various organic compounds.

One advantage of ozone over chlorine is the type of residuals formed. Oxidation of organic compounds using chlorine has the potential to form trihalomethanes, which are suspected carcinogens. Ozone oxidation of organic compounds forms short chained organic acids, ketones, and aldehydes instead. Equipment required for ozone oxidation of cyanides

includes an ozone generator, gas diffusion system, a mixed reaction tank, and off-gas controls to prevent the release of unreacted ozone. The major disadvantages of ozone oxidation are the operating costs and the capital costs of the ozone generating and transfer equipment and off-gas control system. EPA is not aware of any iron and steel facilities using ozone treatment for cyanide.

Oily Wastewater Treatment Technologies

Hot forming and cold rolling operation wastewater contain high levels of O&G. For hot forming operations, scale pits and roughing clarifiers fitted with oil skimmers remove nonemulsified O&G from high-rate recycle systems. These technologies are discussed in the solids separation technologies subsection. Oily wastewater generated by cold rolling operations contain some emulsified oils that require chemical treatment prior to removal. Characteristics of emulsified oils vary widely, depending on the types of oils used in the process. The following describes technologies commonly used to remove both emulsified and nonemulsified oils.

- ***Gravity Flotation.*** Oil skimming via gravity flotation can be used for nonemulsified oil treatment. The wastewater is processed in a tank or basin of sufficient size and design to allow the oil to separate and rise to the surface. Typical wastewater residence times vary from 0.5 to over an hour. At the surface, the oil is retained by the underflow baffles and removed. Common devices used to separate nonemulsified oils include disk, belt, and rotating drum oil skimmers, and coalescers.

  Skimming is a simple method to separate floating oil from wastewater. Skimming devices are typically mounted onto the side of a tank and operate on a continuous basis. The disk skimmer consists of a vertically rotating disk (typically 12 to 24 inches in diameter) that is partially submerged into the liquid of a tank (typically to a depth of 4 to 12 inches below the liquid surface). The disk continuously revolves between spring-loaded wiper blades that are located above the liquid surface. The adhesive characteristics of the floating oil cause the oil to adhere to the disk. The oil is removed from the disk as the disk surface passes through the wiper blades and is diverted to a run-off spout for collection. Maximum skimming rates typically range from 2 to 10 gallons per hour of oil. Belt and drum skimmers operate in a similar manner, with either a continuous belt or rotating drum partially submerged in a tank. As the surface of the belt or drum emerges from the liquid, the oil that adheres to its surface is scraped (drum) or squeezed (belt) off and diverted to a collection vessel.

  Coalescers are typically designed as tanks containing a coalescing media that accelerates phase separation. The media in the coalescers is a material such as polypropylene, ceramic, or glass, which attracts oil in preference to

water (i.e., oleophilic). Oily wastewater passes through the unit and the oil adheres to the coalescing media. The oil forms droplets that conglomerate and rise to the surface of the tank where they are removed by a skimming device or weir (Reference 8-8). Gravity flotation is commonly used in the iron and steel industry to remove nonemulsified oils from hot forming and continuous casting wastewaters.

- ***Oil/Water Separation.*** The American Petroleum Institute (API) separator is the most commonly used type of oil/water separator to remove nonemulsified oils. The API oil/water separator is typically a rectangular basin, designed with baffles to trap sediments and retain floating oils, that can achieve 150-micron droplet oil removal as per API standards. This separator is used for wastewater containing nonemulsified oil with heavy solids content or when long retention times are required. Standard configurations of these systems include surface oil skimmers, sloped bottoms, and augers to remove collected sludge. Figure 8-4 presents an oil/water separator. Standard API oil/water separators can reduce solids concentrations to less than 100 mg/L. Oil/water separators are commonly used in the iron and steel industry to remove nonemulsified oils from hot forming, steel finishing, and forging wastewaters.

- ***Emulsion Breaking Followed by Dissolved Air Flotation.*** If wastewater contains emulsified oils, it must undergo chemical treatment to separate the oils from solution prior to further treatment steps. Chemical treatment breaks up stable oil/water emulsions (oil dispersed in water, stabilized by electrical charges and emulsifying agents). A stable emulsion will not separate without chemical treatment. Chemical emulsion breaking is used to treat wastewater streams containing emulsified coolants and lubricants. This technology is also used to treat cleaning solutions that contain emulsified oils.

  The major equipment needed for chemical emulsion breaking includes reaction chambers with agitators, chemical storage tanks, chemical feed systems, pumps, and piping. Factors to be considered for breaking emulsions are type of chemicals, dosage and sequence of addition, pH, mixing, heating requirements, and retention time. Chemicals such as polymers, alum, ferric chloride, and organic emulsion breakers break emulsions by neutralizing repulsive charges between particles, precipitating or salting out emulsifying agents, or weakening the interfacial film between the oil and water so it is readily broken. Reactive cations (e.g., H^+, Al^{+3}, Fe^{+3}) and cationic polymers are particularly effective in breaking dilute oil/water emulsions. Once the charges have been neutralized or the interfacial film broken, the small oil droplets and suspended solids either adsorb on the surface of the floc that is formed or break out and float to the top. Different types of emulsion-breaking

chemicals are used for different types of oils. If more than one chemical is necessary, the sequence of addition can affect both breaking efficiency and chemical dosages.

Wastes generated by chemical emulsion breaking include surface oil and oily sludge, which are usually contract hauled for disposal by a licensed contractor. If the recovered oil has a sufficiently low percentage of water, the oil may be burned for its fuel value or processed and reused.

Dissolved air flotation following chemical emulsion breaking is an effective method of oil removal. With dissolved air flotation, air is injected into a fluid under pressure. The amount of air that can dissolve in a fluid increases with increasing pressure. When the pressure is released, the air comes out of solution as bubbles that attach to O&G particles, thus "floating" the O&G to the surface. There are two types of operational modes for dissolved air flotation systems, full flow pressurization and recycle pressurization. In full flow pressurization, all influent wastewater is pressurized and injected with air. The wastewater then enters the flotation unit where the pressure is relieved and bubbles form, causing the O&G to rise to the surface. In a recycle pressurization system, part of the clarified effluent is recycled back to the influent of the dissolved air flotation unit, then pressurized and supersaturated with air. The recycled effluent then flows through a pressure release valve to the flotation unit. Figure 8-5 illustrates a typical dissolved air flotation unit.

Dissolved air flotation systems can achieve O&G removal efficiencies of 90% or greater. Emulsion breaking with dissolved air flotation requires more equipment, supervision, and control than gravity flotation and API separators; however, this technology is more efficient in removing O&G, especially nonemulsified oils. Emulsion breaking followed by dissolved air flotation is commonly used in the iron and steel industry to treat emulsified coolants, lubricants, and cleaning solutions.

- ***Ultrafiltration.*** Ultrafiltration is a pressure-driven membrane process that separates emulsified oils without the need for chemical emulsion breaking. Using an applied pressure difference across a membrane, wastewater and small compounds (oil and other contaminants) pass through the membrane and are collected as permeate while larger compounds (emulsified oils) are retained by the membrane and are recovered as concentrate.

  Ultrafiltration is used in the iron and steel industry to remove materials ranging from 0.002 to 0.2 microns or molecular-weights from 500 to 1,000,000 (e.g., oil emulsion and colloidal silica) (Reference 8-9). Prefiltration of the ultrafiltration influent is commonly used to remove large particles and free oil to prevent membrane damage and membrane

fouling. Many ultrafiltration membranes are typically made of homogeneous polymer or copolymer material. The transmembrane pressure required for ultrafiltration typically ranges between 15 to 200 pounds per square inch and depends on membrane pore size.

Ultrafiltration generates a concentrated oil phase that is 2 to 5 percent of the influent volume (Reference 8-10). Oily concentrates are typically contract hauled or incinerated and the permeate (water phase) can either be treated further to remove water soluble metals and organic constituents or directly discharged, depending on local and state requirements.

The ultrafiltration system includes pumps and feed vessels, piping or tubing, monitoring and control units for temperature, pressure and flow rate, process and cleaning tanks, and membranes. Membranes are specifically designed to handle various waste stream parameters, including temperature, pH, and chemical compatibility. Membranes can be purchased in several different configurations, including hollow fiber, tubular, flat plate, and spiral wound (Reference 8-9). The configuration selected for each application depends on the type of application. For example, tubular membranes are commonly used to separate suspended solids, whereas spiral wound membranes are used to separate oil from water. The spiral wound design ultrafiltration membranes have a high membrane packing density and effective mass transfer characteristics.

Ultrafiltration is more effective at removing emulsified oils than previously discussed technologies, and has a smaller design "foot print" than emulsion breaking/dissolved flotation systems. However, replacement membranes are expensive, and the technology requires more operator attention than gravity flotation and API separator systems. Ultrafiltration is commonly used in the iron and steel industry to treat emulsified coolants, lubricants, and cleaning solutions.

Carbon Dioxide Injection

Carbon dioxide injection is one method of removing scale-forming metal ions (hardness) that accumulate in water recirculation systems from BOF recycle water. Carbonate precipitation occurs in the recycle system through injection of carbon dioxide (CO_2) prior to clarification. Carbon dioxide is injected through a very fine bubble diffusion assembly, which is located in a basin with a minimum water depth of 10 feet. Liquid CO_2 can be stored on site and preheated prior to injection to create CO_2 gas. A series of baffles or a mixer directly above the CO_2 injection point help keep the bubbles submerged as long as possible.

Carbon dioxide can also be introduced by a pressurized solution feed system (PSF). The PSF system is designed to utilize 95 percent of the CO_2 feed gas. The gas is forced into a solution under high pressure to maintain the gas in solution until it is injected into the

wastewater. The carbonated solution, which is now carbonic acid and excess CO_2, is injected through a specially designed injector that maintains the PSF system pressure. This allows excess CO_2 gas, if any, to be released and immediately consumed by the wastewater. Both CO_2 delivery systems form carbonic acid and bicarbonate alkalinity as illustrated by Equation 8-10 below:

$$H_2O + CO_2 \text{-------}> H_2CO_3 \text{--------}> H^+ + HCO_3^- \qquad (8\text{-}10)$$

Carbonate reacts with magnesium and calcium ions to form insoluble precipitate, which is removed in a subsequent clarifier, as shown in Equation 8-11:

$$Ca^{2+} + Mg^{2+} + 2HCO_3 + \text{heat} \text{-----}> CaCO_3\downarrow + CO_2 + H_2O \qquad (8\text{-}11)$$

Carbon dioxide injection is commonly used by the iron and steel industry to reduce effluent hardness levels to 10 to 15 mg/L as $CaCO_3$ in BOF recycle systems. However, the layout of an existing recycle system may not allow installation of carbon dioxide storage for the injection system. Carbon dioxide injection systems require regular maintenance and testing of automatic controllers and calibration of electrodes to ensure system reliability.

Metals Treatment Technologies

Dissolved and total metals are present in high-rate recycle system blowdown wastewater from blast furnace, sintering, BOF, vacuum degassing, and continuous casting operations at levels that may require treatment before discharge. Pickling, electroplating, and other steel finishing processes also generate wastewater containing dissolved and total metals.

Chemical precipitation followed by gravity sedimentation is the treatment technology most commonly used by the industry to remove dissolved and total metals from wastewater. When chromium VI is present in the wastewater, hexavalent chromium reduction is commonly used as a pretreatment step prior to hydroxide precipitation for hexavalent-chromium-bearing wastewater generated by steel finishing operations. Below is a discussion of hexavalent chromium reduction and chemical precipitation.

- ***Hexavalent Chromium Reduction.*** Reduction is a chemical reaction in which electrons are transferred from one chemical (the reducing agent) to the chemical being reduced (the oxidizing agent). Sulfur dioxide, sodium bisulfite, sodium metabisulfite, and ferrous sulfate form strong reducing agents in water. Iron and steel finishing sites use them to reduce hexavalent chromium to the trivalent form, which allows the metal to be removed from solution by chemical precipitation. The reaction in these processes is illustrated by the following sulfur dioxide reaction (reduction using other reagents is chemically similar):

$$2H_2CrO_4 + 3SO_2 \text{----}> Cr_2(SO_4)_3 + 2H_2O \qquad (8\text{-}12)$$

An operating pH level between 2 and 3 is typical. At pH levels above 5, the reduction rate is slow and oxidizing agents such as dissolved oxygen and ferric iron interfere with the reduction process by consuming the reducing agent. However, depending upon the initial pH, a significant amount acid may be required to lower and maintain the target pH.

Figure 8-6 presents a hexavalent chromium reduction system. Typical treatment involves retention in a reaction tank for 45 minutes. The reaction tank is equipped with pH and ORP controls. Sulfuric acid is added to maintain a pH of approximately 2.0, and a reducing agent is metered to the reaction tank to maintain the ORP at 250 to 300 millivolts. The reaction tank is equipped with an impeller designed to provide approximately one bath volume per minute.

Chemical reduction of hexavalent chromium is a proven technology widely used at iron and steel finishing sites to reduce hexavalent chromium concentrations prior to chemical precipitation. Operation at ambient conditions requires little energy, and the process is well suited to automatic control.

- ***Chemical Precipitation.*** Chemical precipitation involves removing metallic contaminants from aqueous solutions by converting soluble, heavy metals to insoluble salts. The precipitated solids are then removed from solution by flocculation followed by sedimentation and/or filtration. Precipitation is caused by the addition of chemical reagents that adjust the pH of the water to the minimum solubility of the metal. The standard reagents include the following:

  — Lime (calcium hydroxide),
  — Caustic (sodium hydroxide),
  — Magnesium hydroxide,
  — Soda ash (sodium carbonate),
  — Trisodium phosphate,
  — Sodium sulfide, and
  — Ferrous sulfide.

  These reagents precipitate metals as hydroxides, carbonates, phosphates, and sulfides. The majority of iron and steel sites use lime or caustic for precipitation. Metals commonly removed from solution by precipitation include arsenic, barium, cadmium, chromium, copper, lead, mercury, nickel, selenium, silver, thallium, and zinc.

  Figure 8-7 shows a typical chemical precipitation process for metals removal. A chemical precipitant is added to the metal-containing water in a stirred reaction vessel. The dissolved metals are converted to an

insoluble form by a chemical reaction between the soluble metal and the precipitant. The suspended particles are then flocculated and either settled in a clarifier or removed via a membrane filter. Granular media filtration can be used for wastewater polishing to remove remaining suspended metal precipitates.

Hydroxide precipitation is the predominant type of chemical precipitation used by the iron and steel industry. Hydroxide precipitation normally involves using calcium hydroxide (lime), sodium hydroxide (caustic), or magnesium hydroxide as a precipitant to remove metals as insoluble metal hydroxides. The reaction is illustrated by the following equation for precipitation of a divalent metal using sodium hydroxide:

$$\text{Metal}^{++} + 2\text{NaOH} \text{ ----> } \text{Metal(OH)}_2 + 2\text{Na}^{+} \qquad (8\text{-}13)$$

The effluent metals concentration attained by hydroxide precipitation depends on the metals present, precipitant used, the reaction conditions (especially pH), and the presence of other materials that may inhibit precipitation. Hydroxide precipitation achieves greater than 95% removal of metals found most frequently in industry wastewater, such as lead and zinc.

The solubility of the metal is directly related to the pH of its environment. Many metals can form low solubility hydroxides in the pH range of 8.5 to 11.5. However, several metallic compounds such as lead, zinc, nickel, and copper are amphoteric and exhibit a point of minimum solubility. Any further addition of alkali can drastically increase the solubility of the compound. Different metals have various minimum solubility points, which can pose a challenge when aqueous waste streams have highly variable metal compositions. Figure 8-8 shows the minimum solubilities of some common metals at various pH values (Reference 8-11). Figure 8-8 was developed based on empirical studies using single metal solutions in reagent-free water. Minimum metal solubilities in complex wastewater may differ from those shown in Figure 8-8.

The solubility curves in Figure 8-8 indicate that achieving the minimum solubility of all metals at a single operating pH would be difficult. At a pH at which the solubility of one metal hydroxide may be minimized, the solubility of another may be relatively high. In most cases, a pH between 9 and 11, selected on the basis of jar tests or operating experience with the water, produces an acceptable effluent quality. For a waste containing several metals, however, more than one precipitation/sedimentation stage with different pH control points may be necessary to remove all the metals of concern to the desired level. In practice, however, iron and steel

facilities generally use only one-stage precipitation optimized for greatest removal of targeted metals.

Incidental iron coprecipitation also occurs at facilities discharging spent hydrochloric and/or sulfuric acid to treatment. Pollutants of concern (metals) are enmeshed by the iron precipitates, and subsequently removed during a solids removal step. Some facilities add ferric chloride or ferric sulfate to induce coprecipitation.

Removal of precipitated metals typically involves adding flocculating agents or polymers to destabilize the hydrodynamic forces that hold the particle in suspension. For a continuous system, polymer is normally added in-line between the reaction tank and the flocculation tank. In the flocculation tank, the mixer is slowed to promote agglomeration of the particles until their density is greater than water and they settle from solution in the clarifier.

- ***Ion Exchange.*** Ion exchange is a reversible chemical reaction that exchanges ions (typically metals) in a feed stream for ions of like charge on the surface of an ion-exchange resin. Resins are broadly divided into cationic or anionic types. Typical cation resins exchange H^+ for other cations, while anion resins exchange OH^- for other anions. Figure 8-9 shows a typical ion exchange system. Many types of process wastewater are excellent candidates for ion exchange, including the rinse water from plating processes of lead, nickel, tin, tin-lead, chromium, and zinc.

  Ion exchange can be used for steel finishing water recycling and/or metal recovery. For water recycling, cation and anion columns are placed in series. The feed stream is deionized and the product water is reused for rinsing. The regenerant from the cation column typically contains metal species (with the exception of chromium, which is captured in the anion column), which can be recovered in elemental form. The anion regenerant, which does not contain metals, is typically discharged to end-of-pipe wastewater treatment. When metal recovery is the only objective, a single or double cation column unit containing selective resin is used. These resins attract divalent cations while allowing monovalent cations to pass, a process usually referred to as metal scavenging. Water cannot be recycled because contaminants other than the target cations remain in the stream exiting the column.

  Ion exchange equipment ranges from small, manual, single-column units to multicolumn, highly automated units. For continuous service, two sets of columns are necessary. One set handles the service flow, while the other set is regenerated. Thus, two-column metal scavenging and four-column deionizing systems are common. Automatic systems direct the

wastewater flow and initiate regeneration with little or no operator interaction. Equipment size is based on flow volume and concentration. Resin capacity varies but often ranges from 1 to 2 pounds per cubic feet. Columns are typically sized to handle wastewater flow for at least a period of time equal to the time required for regeneration. Automatic systems are sized to provide continuous service. Regeneration volume typically ranges from 2 to 4 resin bed volumes of a dilute acid or caustic.

Other similar technologies that could be applied to pickling and electroplating wastewater generated by steel finishing operations include electrowinning and reverse osmosis. Electrowinning can recover metals from ion exchange regenerants and return the metals to the plating bath. Reverse osmosis is a membrane technology that can be used to recover metal salts and generate a treated water stream that can be recycled for use as a rinse water. Neither of these technologies were reported in industry survey responses as a metals recovery technology; however, these technologies are commonly used in similar electroplating operations and are therefore applicable to the iron and steel finishing industry. For more information on these processes, refer to the Development Document for the Proposed Effluent Limitations Guidelines and Standards for the Metal Products and Machinery Point Source Category (Reference 8-10).

Solids Separation Technologies

Iron and steel facilities generate many types of solid wastes, including scale, biosolids, precipitate from cyanide and chemical precipitation systems, and solids from filtration backwash. The most common types of solids separation technologies used are scale pits, classifiers, and clarifiers.

- ***Scale Pits with Oil Skimming.*** Scale pits provide primary sedimentation and oil separation for recycle process water. Scale pits remove large, easily settleable iron scale. Pits are scraped or dredged to remove iron scale for reuse or disposal in a landfill on or off site. Oil is typically skimmed from the surface of the wastewater by a rope or belt skimmer and collected for off-site reclamation.

- ***Classifiers.*** Classifiers provide additional primary sedimentation for recycle process water. Solids are removed using screw or rake systems and typically disposed of on or off site.

- ***Clarification/Sedimentation.*** Gravity sedimentation in clarifiers is a common method of solids removal used in recycle and end-of-pipe treatment systems. Figure 8-10 depicts a typical clarifier. To improve the performance of high-efficiency and roughing clarifiers, coagulants such as polymers are added. These coagulant aids enhance solids removal by

aiding in the formation of larger, more readily settleable particles. High-efficiency clarifiers are used for end-of-pipe treatment and within water recycle systems that do not need water quality that is equivalent to filtered effluent for reuse in manufacturing processes. Systems with large amounts of scale or suspended solids need to pump contact cooling waters that collect in scale pits to a roughing clarifier for coarse solids removal prior to filtration, cooling, and recirculation.

Two important design parameters for roughing and high-efficiency clarifiers include the surface area of the clarifier and the detention time. Both high-efficiency and roughing clarifiers are normally designed on the basis of a surface-loading rate expressed as gallons per day per square foot of surface area (gal/day/ft^2) and provide 90 to 150 minutes of detention based on the average flow rate (Reference 8-5). The surface-loading rate depends on the type of material to be separated. The table below shows the range of surface loading rates for high-efficiency clarifiers (Reference 8-12).

Suspension	Range gal/day/ft^2	Peak Flow gal/day/ft^2
Activated sludge solids	590 - 785	1,460
Alum floc	613 - 1,200	1,200
Iron floc	613 - 1,200	1,200
Lime floc	730 - 1,460	1,460
Untreated wastewater	613-1,200	1,200

However, unlike more efficient clarifiers, roughing clarifiers are designed to remove large solids that rapidly settle. Therefore, surface loading rates may be three to four times those observed for high-efficiency clarifiers presented in the table. When the area of the tank has been established, the detention period in the tank is governed by the water depth.

Open-top circular or rectangular shaped clarifiers are typically used for sedimentation of biological treatment solids (also referred to as secondary clarification). For sedimentation of iron-cyanide solids, inclined tube or lamella clarifiers are commonly used. Depending on land availability and wastewater flow rates, open-top, inclined tube, or lamella clarifiers are used for sedimentation of metal hydroxides generated from treatment of ironmaking, steelmaking, and steel finishing wastewater. The inclined tubes in the clarifier are oriented at angles varying between 45 and 60 degrees from the horizontal plane. Although the tube may be shaped in many forms, rectangular or square shapes are more common. Water enters the tank and solids settle to the tank bottom. As the water continues

upward through the tubes, additional solids settle on the lower side of the tube. The clarified effluent continues up through the tube and passes over the weir. The solids collect and agglomerate on the lower side of the tube and, because of the tube inclination, slide downward through the tube. They then drop back into the settling tank, where they collect on the bottom, and are scraped away into a sludge hopper before discharge to a sludge thickener. The surface area or "foot print" covered by the lamella plates is typically 65 to 80 percent of that required for a circular clarifier. Their design promotes laminar flow within the tubes, which enhances solids settling, even when the water throughput is relatively high. However, short circuiting or flow surges can reduce clarifier effectiveness. Lamella clarifiers are commonly used in the iron and steel industry to clarify steel finishing wastewater. Ironmaking and steelmaking wastewater treatments systems have substantially higher flows than finishing systems, and therefore use common circular clarifiers.

- ***Microfiltration for Precipitated Metals Removal.*** One alternative to conventional clarifiers for removal of insoluble solids, following chemical precipitation systems, is microfiltration. Microfiltration has been observed at facilities manufacturing metal products and machinery and could potentially be used to remove solids from chemical precipitation effluents at iron and steel facilities (Reference 8-10). Microfiltration is a pressure-driven membrane process used to separate solution components based on molecular size and shape. Using an applied pressure difference across a membrane, solvent (wastewater) and small solute (pollutants) species pass through the membrane and are collected as permeate while larger compounds are retained by the membrane and are recovered as concentrate.

  Microfiltration is used to remove materials ranging from 0.1 to 1.0-microns (e.g., colloidal particles, heavy metal particulates and their hydroxides). Numerous microfiltration membranes are isotropic in morphology and are typically made of homogeneous polymer material. Prefiltration is advisable for suspended solids loads above 200 mg/l. The transmembrane pressure required for microfiltration typically ranges between 3 to 50 pounds per square inch (psi) and depends on membrane pore size.

  Microfiltration generates a concentrated suspended solid slurry that is typically discharged to dewatering equipment, such as a sludge thickener and filter press. The permeate can either be treated further for pH adjustment or be directly discharged, depending on local and state requirements. The microfiltration system includes pumps and feed vessels, piping or tubing, monitoring and control units for temperature, pressure and flow rate, process and cleaning tanks, and membranes.

Membranes are specifically designed to handle various waste stream parameters, including temperature, pH, and chemical compatibility. Membranes can be purchased in several different configurations, including hollow fiber, tubular, flat plate, and spiral wound (Reference 8-9). The configuration selected for each application depends on the type of application. For example, tubular membranes are commonly used to separate suspended solids, whereas spiral wound membranes are used to separate oils from water. The tubular design microfiltration membranes are the least likely to foul with heavy suspended solids loadings and are easy to clean. Microfiltration is more effective at solids removal and has a smaller design "foot print" than conventional clarifiers. However, replacement membranes are expensive, and the technology requires more operator attention than a clarifier.

Polishing Technologies

Polishing technologies are the final treatment steps designed to remove residual, low concentrations of target pollutants from iron and steel wastewater prior to discharge. Examples of polishing technologies include multimedia filters following clarification to remove small concentrations (less than 20 mg/L) of entrained suspended solids, or carbon adsorption to remove trace concentrations of organic pollutants remaining in cokemaking wastewater following biological treatment. The following paragraphs describe each of these polishing technologies observed at iron and steel facilities.

- ***Multimedia Filtration (Mixed-Media Filtration).*** Multimedia filtration, one of the oldest and most widely applied types of filtration used to remove suspended solids from wastewaters, uses a bed of granular particles as the filter medium. Figure 8-11 illustrates a multimedia filter. The bed may consist of one type of medium (e.g., sand) of varying particle size or different types of media (e.g., sand and gravel, sand and anthracite) with differing densities and different particle sizes (Reference 8-12).

  Multimedia filters can be more efficient but more expensive and complex than single-media filters. The filter bed is contained within a basin or tank and is supported by an underdrain system, which allows the filtered liquid to be drawn off while retaining the filter medium in place. As suspended particle-laden water passes through the bed of the filter medium, particles are trapped on top of and within the bed. When the pressure drop across the filter is large enough to impede flow, it is cleaned to remove solids by backwashing, whereby wash water is forced through the bed in the reverse direction of original fluid flow. Backwashing causes the bed to become fluidized, with solids being entrained and discharged with wash water. The backwash water is typically sent to clarifiers or gravity thickeners to remove the solids. For dual media filters, the filtration rate varies from 2 to 8 gpm/ft^2 with bed depths ranging from 24 to 48 inches.

While multimedia filtration is a proven technology for fine particle removal, the system requires proper attention to monitoring, maintenance, and backwash cycles to maximize filter efficiency. Bed shrinkage is a potential problem for filters. When the media grains (typically sand) become covered by a slime coating, this causes the bed to compact and possibly to develop cracks. These cracks may allow unfiltered wastewater to pass through the bed. Also, air binding, caused by a release of nitrogen and/or oxygen gases dissolved in the wastewater, creates air bubbles in the bed, which may interfere with the filtration rate.

Granular media filters are used to remove suspended solids from cokemaking wastewater following biological treatment, and from high-rate recycle cooling water and blowdown water from blast furnace ironmaking, sintering, continuous casting, and hot forming operations.

- ***Granular Activated Carbon.*** Granular activated carbon (GAC) removes dissolved organic compounds from wastewater streams via adsorption. Adsorption is a natural process by which molecules of a dissolved compound collect on and adhere to the surface of an adsorbent solid. Adsorption occurs when the attractive forces at the carbon surface overcome the attractive forces of the liquid. Activated carbon is a well-suited medium for this process due to its large internal surface area, high attraction to adsorbates (pollutants to be removed), and hydrophobic nature (i.e., water will not occupy bonding sites and interfere with the adsorption of pollutants). Pollutants in the wastewater bond to the activated carbon grains until all the surface bonding sites are occupied. When all bonding sites are occupied, the carbon is considered to be "spent." Spent carbon requires regeneration, which reduces adsorption capacity. After several regenerations, the carbon is disposed.

A granular carbon system generally consists of vessels in which the carbon is placed, forming a "filter" bed. Vessels are usually circular for pressure systems or rectangular for gravity flow systems. For wastewater treatment, activated carbon is packed into one or more filter beds or columns. Typical treatment systems consist of multiple filter beds in series. Wastewater flows through the filter beds and is allowed to come in contact with all portions of the activated carbon. The activated carbon in the upper portion of the column is spent first (assuming operation is downflow mode), and progressively lower regions of the column are spent as the adsorption zone moves down the unit. When pollutant concentrations at the bottom of the column begin to increase above acceptable levels, the entire column is considered spent and must be replaced.

All vessels are equipped with carbon removal and loading mechanisms to allow spent carbon to be removed and new material to be added. Vessels

are backwashed periodically to remove the accumulated suspended solids in the filter bed. Surface wash and air scour systems can also be used as part of backwash cycle. Activated carbon systems may include on-site carbon storage vessels and thermal regeneration facilities, or off-site vendors may provide these services.

Activated carbon effectively removes a wide range of soluble organic compounds, and can produce a high-quality effluent. However, activated carbon beds must be backwashed periodically to avoid a buildup of head loss from solids accumulation. This backwash must then be treated prior to discharge. Additionally, the bed must be regenerated once the carbon is spent. If the regeneration is not performed on site, the spent carbon is sent to off-site vendors. Activated carbon adsorption is used as a polishing treatment step to remove residual concentrations of phenol and polyaromatic hydrocarbons (PAHs) from cokemaking wastewater following biological treatment.

8.3.2 Biological Treatment

Biological treatment uses bio-oxidation to remove organic materials from wastewater. Microorganisms under aerobic conditions use the organic materials as substrates, thus removing them by microbial respiration and synthesis (Reference 8-13). Biological treatment with nitrification also incorporates ammonia removal via conversion to nitrate by biological processes. Biological denitrification then converts the nitrate to nitrogen gas. Biological nitrification and denitrification treatment systems are described below.

- ***Biological Treatment via Conventional Activated Sludge.*** Biological treatment uses microorganisms to consume, and thereby destroy, organic compounds as a food source. The organic compounds are used as both a carbon and energy source for these microbes. The microbes also require supplemental nutrients, such as ammonia and phosphorus, for growth. If ammonia removal is required, nitrification can be incorporated into an activated sludge biological treatment system. Nitrification is the aerobic process of converting ammonia to nitrite and then to nitrate. Biological treatment and nitrification is typically conducted in a conventional activated sludge system configured with an aeration tank, a clarifier, and return sludge equipment. Figure 8-12 presents a process flow diagram of a typical activated sludge biological treatment system. Diffused or mechanical aeration achieves the aerobic environment in the reactor and also serves to maintain the mixed liquor in a completely mixed regime. After a specified period of time, the mixture of new bacterial cells and old bacterial cells passes into a clarifier where the cells are separated from the treated wastewater. A portion of the settled cells is recycled to maintain the desired concentration of organisms in the reactor, and a portion is wasted.

In the nitrification process, the ammonium ion is converted to nitrate in two steps by autotrophic bacteria (*Nitrosomonas* and *Nitrobacter*, respectively), as summarized by the following reactions (Reference 8-12):

$$NH_4^+ + 3/2\ O_2 \text{ ----> } NO_2^- + 2H^+ + H_2O \qquad (8\text{-}14)$$

$$NO_2^- + ½\ O_2 \text{ ----> } NO_3^- \qquad (8\text{-}15)$$

In addition to obtaining energy from the reaction shown above, the bacteria assimilate a portion of the nitrogen into the cell tissue as shown by the following reaction:

$$4CO_2 + HCO_3^- + NH_4^+ + H_2O \text{ ----> } C_5H_7NO_2 + 5O_2 \qquad (8\text{-}16)$$

As shown in Equation 8-16, the nitrifying autotrophic bacteria use carbon dioxide and bicarbonate as a carbon source. Supplemental bicarbonate is introduced to the system through soda ash addition. Phosphorous is another key chemical required for biological growth. Biomass typically contains two percent phosphorous; therefore, phosphoric acid is normally added to the system as a nutrient.

The most important factor in controlling the activated sludge system is the sludge retention time (SRT). Industry data indicate that an SRT range of 50 to 100 days for cokemaking biological treatment is typical. Other significant factors affecting activated sludge systems include hydraulic retention time (HRT), the BOD_5/TKN (total Kjeldahl nitrogen) ratio, food-to-microorganism ratio (F/M), dissolved oxygen concentration (DO), temperature, and pH. Typical values for a few of these factors are shown below.

HRT (hr)	F/M	Basin DO (mg/L)	Basin Temperature (°F)	Basin pH
48	0.1 - 0.3	2 - 4	40 - 100	6 - 9

These factors, along with influent ammonia and nitrite concentrations, are important for nitrification. Biological treatment in the iron and steel industry is limited to treatment of cokemaking wastewater to remove nutrients and dissolved organic matter. By-product recovery cokemaking operations generate wastewater containing nutrients such as ammonia and dissolved organic matter, including phenols, VOCs, and PAHs. Biological treatment with nitrification can reduce organic concentrations to near non-detect; and can reduce ammonia concentrations in cokemaking wastewater to approximately 3 mg/L, as demonstrated by data provided in industry survey responses.

- ***Biological Treatment via Sequencing Batch Reactor.*** A sequencing batch reactor (SBR) is a fill-and-draw activated sludge system capable of treating the same types of wastewater as a conventional activated sludge system. The main difference is that conventional activated sludge systems treat the wastewater simultaneously in separate tanks, while an SBR system carries out the processes sequentially in the same reactor tank.

  All SBR systems follow the sequence: fill, react, settle, draw, idle. Figure 8-13 illustrates the operation cycle of an SBR system. The fill step adds wastewater to the reactor and lasts approximately 25 percent of the full cycle time. Aeration begins during the react step. This step, similar to aeration tanks in a conventional activated sludge system, biodegrades organics and if operated to achieve nitrification, converts the ammonium ion to nitrate. The react step uses approximately 35 percent of the full cycle time. The settle step allows solids separation to occur, providing a clarified supernatant to be discharged as effluent. Settling accounts for approximately 20 percent of the full cycle time. The clarified, treated water is removed during the draw step. This step accounts for approximately 15 percent of the full cycle time. Idle is the last step. The purpose of the idle step in a multitank system is to provide time for one reactor to complete its fill cycle before switching to another unit. Sludge wasting also occurs during the idle step (Reference 8-14). Effective nitrification requires longer reaction and sludge retention times than for removal of only organic compounds.

  SBR systems have many advantages over conventional activated sludge systems. An SBR tank serves as an equalization basin during the fill step and therefore can tolerate greater peak flows and/or shock loadings without degradation of effluent quality. The mixed liquor solids (biomass) cannot be washed out by hydraulic surges, since they can be held in the tank as long as necessary. Additionally, no return activated sludge pumping is required, because the mixed liquor is always in the reactor. The effluent quality of an SBR is also comparable to a conventional activated sludge system. However, because the discharge of effluent is periodic, it is possible, within limits, to hold the effluent until it meets specified requirements. Disadvantages to SBRs include the necessity of sophisticated timers and level sensors to control the process sequences and difficulties involved in controlling the draw step to minimize the discharge of floating or settled sludge. Also, aeration equipment can plug during the settle, draw, and idle steps.

- ***Biological Treatment via Attached Growth/Fixed Film.*** Attached growth/fixed film biological filtration is an alternative to a conventional activated sludge system or SBR. The biological processes for pollutant removals are the same; the difference is that the microorganisms adhere to

the surface of a rigid supporting media. Biological filtration systems also provide physical filtration, thereby removing solids from the wastewater.

Wastewater enters the bottom of the filters through a feed distribution header and flows upward through the submerged media and support. Filter bed mediums and supporting materials may include granular particles, gravel, crushed stone, or other packing material. The microbes attached to the medium contact the wastewater and absorb organics and nitrogen for growth. The bed medium also filters out solids and suspended microorganisms. The biological filter must be periodically backwashed to prevent hindered wastewater flow. The backwash, consisting of solids and microorganisms, is settled in a clarifier or thickener. Benefits of biological filtration include dependability of the system, and a smaller design "foot print" than required by conventional activated sludge systems. However, biological filtration systems require proper attention to monitoring, maintenance, and backwash cycles to maximize efficiency, and are more costly than conventional activated sludge systems.

Effective nitrification in attached growth/fixed film systems requires longer contact times and lower hydraulic loading rates than for typical operation to remove organic compounds only. This is typically accomplished in the design of the biofiltration system. Deeper biofiltration beds increase contact time, thereby, enhancing nitrification.

- ***Biological Denitrification.*** Denitrification is a metabolic process in which nitrate is converted to nitrogen gas in the presence of a combined hydrogen source and a lack of free oxygen. The bacteria that reduce nitrate are facultative heterotrophs of the genera Pseudomonas, Micrococcus, Achromobacter, and Bacillus (Reference 8-12). The reaction involves the transfer of electrons from organic carbon (oxidation) to nitrate (reduction) promoting its conversion to nitrogen gas. The biochemical pathway in which nitrate is substituted for oxygen as the final electron acceptor in the electron transport chain is thermodynamically less favorable than if oxygen were the final electron acceptor. In the presence of free oxygen, denitrification ceases and typical aerobic oxidation predominates. Denitrification is typically referred to as anoxic respiration since it is an aerobic process in the absence of free oxygen.

The anoxic process, like the aerobic process, utilizes organic carbon to maintain cellular respiration and synthesis of biomass. The carbon can be derived from either the endogenous decay of biomass or from an external source, such as added methanol or organic materials already in the waste. The majority of denitrification systems operating in the United States use methanol as their carbon source. The equations below show the balanced stoichiometric reactions for converting nitrate to nitrogen gas with either

methanol (Equation 8-17) or acetic acid (Equation 8-18) as the carbon source (Reference 8-15).

$$NO_3^- + 1.08\ CH_3OH + H^+ \text{ ----> } 0.065\ C_5H_7O_2N + 0.47\ N_2 + 0.76\ CO_2 + 2.44\ H_2O \quad (8\text{-}17)$$

$$NO_3^- + 0.65\ CH_3COOH \text{ ----> } 0.5\ N_2 + 1.3\ CO_2 + 0.9\ H_2O + 0.8\ OH^- \quad (8\text{-}18)$$

Biological denitrification (anaerobic) can be used to treat cokemaking wastewater following biological nitrification. For denitrification of cokemaking wastewater, two treatment options are applicable: 1) an end-of-pipe unit in which all the flow from the biological nitrification system enters the denitrification system; or 2) a recycle system in which a portion of the effluent from the biological nitrification system is returned to the beginning of the treatment system and mixed with untreated wastewater. Figure 8-14 presents denitrification systems. For the end-of-pipe denitrification system, a supplemental carbon source such as methanol is required to convert nitrate to nitrogen gas. For the recycle system, recycle equipment and tanks are required to handle recycle volumes approximately 3 to 4 times the original wastewater flow.

8.3.3 Sludge Handling

Solids are removed by a number of the treatment technologies used by the iron and steel industry including 1) biological treatment and cyanide precipitation of cokemaking wastewater, 2) clarifiers for treatment of high-rate recycle water in the ironmaking and steelmaking processes, including backwash from multimedia filters, and 3) chemical precipitation and multimedia filtration of high-rate recycle blowdown and steel finishing process waters for metals removal, including backwash from multimedia filters. Dilute sludges from each of these processes are often concentrated by gravity thickening prior to dewatering by a variety of presses and filters. Filter cake collected from the dewatering equipment may be further processed by sludge dryers to remove additional moisture. The following paragraphs describe the technologies used to reduce the volume of treatment sludges generated by iron and steel facilities.

- ***Gravity Thickening.*** Gravity thickening is a physical liquid-solid separation technology commonly used by the industry to dewater wastewater treatment sludge. Figure 8-15 shows a typical gravity thickener. Sludge is fed from a primary settling tank or clarifier to a thickening tank, where gravity separates the supernatant from the sludge, increasing the sludge density. The supernatant is returned to the primary settling tank. The thickened sludge that collects on the bottom of the tank is pumped to additional dewatering equipment or contract hauled for disposal.

Gravity thickeners are generally used by facilities where the sludge is to be further dewatered by a mechanical device, such as a filter press. Increasing the solids content in the thickener substantially reduces capital and operating costs of the subsequent dewatering device and also reduces the hauling cost. Typically, gravity thickeners produce sludge with 8 to 10 percent solids by weight (Reference 8-16). Thickening is not a viable technology for sludges that have a consistency that hinders thickening. Gravity thickeners are commonly used in all iron and steel industry wastewater treatment systems to thicken dilute sludge.

- ***Rotary Vacuum Filtration.*** Rotary vacuum filtration is commonly used in the industry for sludge dewatering. The rotary vacuum precoat filter consists of a perforated plate steel drum deck covered with a filter cloth. A diatomaceous earth precoat is used to prevent small suspended particles from passing through the filter and into the center of the drum where filtrate is removed. A scraper is used to shave filter cake from the surface of the diatomaceous earth precoat filter, preventing the filter cake from reaching a thickness that would not adhere to the filter. Figure 8-16 depicts a rotary vacuum filter. Rotary drum filters typically rotate between 0.25 and 6.5 revolutions per minute (RPMs), depending on the concentration of suspended solids in the wastewater (Reference 8-12). Filtrate that passes through the filter cake and diatomaceous earth precoat enters the center of the vacuum drum and is collected in horizontal pipes connected to a center drain shaft. Solids collected from ironmaking rotary vacuum filters can be recycled to sintering operations to recover iron. The performance and the life of the filter depend on the filter medium. Also, if the cake is not removed properly from the filter, the cake build-up will eventually cause the filter to clog. Rotary vacuum filters are commonly used in the iron and steel industry to dewater sludges from blast furnace and sintering treatment systems.

- ***Pressure Filtration.*** The plate-and-frame filter press is commonly used for sludge dewatering in the iron and steel industry. Figure 8-17 illustrates a plate-and-frame filter press. A filter press consists of a series of parallel plates pressed together by a hydraulic ram (older models may have a hand crank), with cavities between the plates. The filter press plates are covered with a filter cloth and are concave on each side to form cavities. At the start of a cycle, a hydraulic pump clamps the plates tightly together and a feed pump forces a sludge slurry into the cavities of the plates. The liquid (filtrate) escapes through the filter cloth and grooves molded into the plates and is transported by the pressure of the feed pump (typically around 100 psi) to a discharge port. The solids are retained by the cloth and remain in the cavities. This process continues until the cavities are packed with sludge solids. An air blow-down manifold is used on some units at the end of the filtration cycle to drain remaining liquid from the

system, thereby improving sludge dryness and aiding in the release of the cake. The pressure is then released and the plates are separated.

The sludge solids or cake is loosened from the cavities and falls into a hopper or drum. A plate filter press can produce a sludge cake with a dryness of approximately 25 to 40 percent solids for metal hydroxides precipitated with sodium hydroxide (caustic), and 35 to 60 percent solids for metal hydroxides precipitated with calcium hydroxide (lime). The solids content attained depends on the length of the drying cycle. Filter presses are available in a wide range of capacities (0.6 ft^3 to 20 ft^3). A typical operating cycle is from 4 to 8 hours, depending on the dewatering characteristics of the sludge. Units are usually sized based on one or two cycles per day (Reference 8-12). The maintenance requirements of a plate filter press are lower than other sludge dewatering technologies. However, plate filter presses are more expensive and are operated in batches; therefore, sludge must be held between batches. Plate filter presses are commonly used in the iron and steel industry to dewater sludges from steelmaking and steel finishing treatment systems.

- ***Belt Filtration.*** The belt pressure filter consists of two continuous belts set one above the other. Sludge is fed in between the two belts. Three process zones exist. First, the sludge passes through the drainage zone where dewatering is effected by the force of gravity. Then, the sludge passes into the pressure zone where pressure is applied to the sludge by means of rollers in contact with the top belt. Finally, the sludge is passed to the shear zone where shear forces are used to bring about the final dewatering. The dewatered sludge is then removed by a scraper. Belt filtration can produce a sludge cake with a dryness of approximately 25 to 30 percent solids (Reference 8-17). Belt filters produce very dry cake, low power requirement, and continuous operation. The main disadvantages are short media life and a filtration rate sensitive to incoming sludge. Plate filter presses are commonly used in the iron and steel industry to dewater by-product recovery cokemaking biological treatment sludges.

- ***Centrifugation.*** A sludge dewatering device collects wet sludge in a cone-shaped drum. The drum is rotated to generate centrifugal forces to concentrate solids to the walls of the drum. These solids are continually removed from the centrifuge by an auger, screw conveyor, or similar device. Centrifugation dewaters sludges, reducing the volume and creating a semi-solid cake. Centrifugation of sludge can typically achieve a sludge of 20 to 35 percent solids (Reference 8-12). Centrifuges are compact, need little space, and can handle sludges that might otherwise plug filter cloth. The disadvantages include complexity of maintenance, abrasion problems, and centrate (liquid) high in suspended solids. Centrifuges are

infrequently used in the iron and steel industry to dewater sludges from blast furnace, steelmaking, and finishing treatment systems.

- ***Sludge Drying.*** Wastewater treatment sludges are often hauled off site to disposal sites. The transportation and disposal costs depend primarily on the volume of sludge. Therefore, sludge dehydration following dewatering can further reduce the volume of the sludge and the overall disposal cost. The solids content of the sludge dewatered on a filter press is usually in the range of 25 to 60 percent. Dehydration equipment can produce a waste material with a solids content of approximately 90 percent (Reference 8-12).

  There are several design variations for sludge dehydration equipment. A commonly used type is a sludge drying unit that uses an auger or conveyor system to move a thin layer of sludge through a drying region and discharge it into a hopper. Various heat sources are used for sludge drying, including electric, electric infrared, steam, and gas. Some continuous units are designed such that the sludge cake discharge from a filter press drops into the feed hopper of the dehydration unit, making the overall dewatering process more automated. System capacities range from less than 1 ft^3/hr to more than 20 ft^3/hr of feed. Sludge dehydration equipment requires an air exhaust system due to the fumes generated during drying. Energy requirements for sludge drying can be costly, but depend on the water content of the sludge and the efficiency of a given unit. Sludge drying are infrequently used in the iron and steel industry to dewater sludges from steelmaking and steel finishing treatment systems.

8.4 Best Management Practices (BMPs)

There are many plant maintenance and good housekeeping management practices used at iron and steel facilities that reduce the need for treatment, which saves costs: routine monitoring, training and supervision, production planning and sequencing, process or equipment modification, raw material and product substitution or elimination, and loss prevention and housekeeping (Reference 8-18). These alternatives are discussed below:

- ***Routine Monitoring.*** Routine monitoring and record keeping of pollutants and treatment systems performance enables sites to continuously evaluate treatment system performance and detect and remediate problems early. For example, cokemaking facilities analyze effluent wastewater samples for total phenolics as part of a daily monitoring routine to help identify and respond to potential upset conditions.

- ***Flow Management.*** Good flow management practices reduce pollutant discharges to receiving waters or a POTW. Controlling and treating runoff

from raw material storage piles, EAF dust collection areas, and blast furnace and steelmaking slag processing sites is important. Managing of storm water from process areas through collection and treatment, use as makeup water, or use as control water for cokemaking biological treatment reduces pollutant discharges to adjacent water bodies. Also control and treatment of leachate and groundwater contamination from blast furnace slag pits and coke batteries, coke quench tower sumps, and by-product recovery areas should be addressed. Cascade of blowdowns from compatible noncontact cooling water and water recycle systems minimizes wastewater treatment requirements. Good flow control of rinse water flow rates minimizes wastewater generation and discharge.

- ***Training and Supervision.*** Training and supervision ensures that employees are aware of, understand, and support the company's waste minimization goals. These goals are translated into practical information that will enable employees to minimize waste generation by properly and efficiently using tools, supplies, equipment, and materials.

- ***Production Planning and Sequencing.*** Production is planned to minimize the number of processing steps and eliminate unnecessary procedures (e.g., plan production to eliminate additional cleaning steps between incompatible operations).

- ***Process or Equipment Modification.*** Processes and equipment are modified to minimize the amount of waste generated (e.g., reducing drag-out by slowing the withdrawal speed of the product, installing electrolytic recovery units).

- ***Raw Material and Product Substitution or Elimination.*** Where possible, raw materials or products are replaced with other materials that produce either less waste and/or less toxic waste (e.g., replacing chromium-bearing solutions with non-chromium-bearing and less toxic solutions, consolidating types of cleaning solutions and machining coolants).

- ***Oil Management and Preventive Maintenance.*** Where possible, sites remove oil in wastewater recirculation systems, recycle used oil, and ensure integrity of process area containment systems. Sites should have surveillance and corrective action programs for oil discharges from large noncontact cooling water flows.

- ***Loss Prevention and Housekeeping.*** Preventive maintenance and managing equipment and materials minimizes leaks, spills, evaporative losses, and other releases. Examples include inspecting the integrity of tanks on a regular basis, using chemical analyses instead of elapsed time or amount of product processed as the basis for disposal of a solution, and

controlling spillage from loading stations for rolling solutions and pickling acids. Solution testing is one important loss prevention alternative. The chemical makeup of cleaning solutions changes over time due to evaporative losses, water addition, drag-out of cleaning chemicals, consumption of bath chemistry, chemical reactions, and drag-in of impurities. Because of these factors, cleaning baths lose strength, performance declines, and solutions require disposal. Many sites operate cleaning baths with a schedule consisting of three steps: formulate, use, and discard. This procedure can be expensive and inefficient from a production standpoint, and creates large volumes of waste. For this reason, sites should frequently determine the strength of the cleaning solution and appropriate chemical additions needed to prolong solution use. By implementing a program of testing and record keeping, sites can reduce the disposal frequency of cleaning baths.

- ***Waste Segregation and Separation.*** Mixing different types of wastes or mixing hazardous wastes with nonhazardous wastes is avoided. Recyclable materials are not mixed with incompatible materials or wastes. For example, hexavalent-chromium-bearing wastewater is segregated for pretreatment.

8.5 References

8-1 U.S. Environmental Protection Agency. Development Document for Effluent Guidelines and Standards for the Iron and Steel Manufacturing Point Source Category. EPA/440/1-82/024, Washington, DC, May 1982.

8-2 Keyser, A. G., K. F. Kunkel, and L. A Snedaker. "Impact of Rolling Emulsion Contaminants on Downstream Surface Quality." AISE Steel Technology, p. 43, September 1998.

8-3 Rituper, R., "High-Performance Effluent-Free Pickling Plants with Fluid Bed Hydrochloric Acid Regeneration." Iron and Steel Engineer, November 1995.

8-4 "Waste-Free Exhaust Air Cleaning In Stainless Steel Pickling Plant." Metallurgical Plant And Technology International (Germany), vol. 16, no. 5, October 1993.

8-5 Perry's Chemical Engineers Handbook, Sixth Edition. McGraw-Hill Inc., New York, NY, 1984, pp. 6-8, 12-15 to 12-17, and 25-57.

8-6 Benefield, L. and J. Judkins. Process Chemistry for Water and Wastewater Treatment. Prentice-Hall, Inc., Englewood Cliffs, NJ, 1982.

8-7 Mauk, C. E. "Chemical Oxidation of Cyanide Species by Ozone with Irradiation from Ultraviolet Light." Trans. Society of Mining Engineers, Volume 260, 1976, pg 279.

8-8 Great Lakes Environmental. Equipment Guide for Oil Water Separators and Industrial Wastewater Treatment Equipment Systems, Addison, IL, July 1996.

8-9 Freeman, H. M. Standard Handbook of Hazardous Waste Treatment and Disposal. McGraw-Hill, Inc., New York, NY, 1989.

8-10 U.S. Environmental Protection Agency. Development Document for the Proposed Effluent Limitations Guidelines and Standards for the Metal Products and Machinery Point Source Category. EPA-821-B-00-005, Washington, DC, December 2000.

8-11 LaGrega, M. D., P. Buckingham, and J. Evans. Hazardous Waste Management. McGraw-Hill, Inc., New York, NY, 1994, p. 192.

8-12 Eckenfelder, W. W. Principals of Water Quality Management. CBI Publishing Company, Inc., Boston, MA, 1980.

8-13 Reynolds, T. and P. Richards. Unit Operations and Processes in Environmental Engineering. PWS Publishing Company, Boston, MA, 1996.

8-14 U.S. Environmental Protection Agency. Sequencing Batch Reactors. EPA/625/8-86/011, Washington, DC, October 1986.

8-15 Metcalf and Eddy, Inc. Wastewater Engineering: Treatment, Disposal Reuse. Third Edition. McGraw-Hill Inc., New York, NY, 1991.

8-16 Hoffland Environmental, Inc. HEI Sludge Thickener. http://www.hofflandenv.com/Equipment_Line/Sludge_Thickener.htm.

8-17 Hoftstra Engineering University Web Page. Sludgenet. http://147.45.150.5/~mgelfa20/sendesin/page1.htm.

8-18 Freeman, H.M. Hazardous Waste Minimization. McGraw-Hill, Inc., New York, NY, 1990.

Table 8-1

Wastewater Minimization, Pollution Prevention, and Process Modification Technologies

Technology	Description	Applicable Subcategories
Wastewater Minimization and Pollution Prevention		
High-rate recycle of wastewater	A closed loop system the recycles approximately 95 percent or more of water for reuse. Typically used in conjunction with treatment to allow more water to be reused. High-rate recycle is well demonstrated in each of the applicable subcategories.	Ironmaking Integrated Steelmaking Integrated and Stand-Alone Hot Forming Non-Integrated Steelmaking and Hot Forming Other Operations
Countercurrent cascade rinsing	Cascading rinsing system that uses consecutive rinse tank to reduce the amount of water necessary for rinsing.	Steel Finishing
Fume scrubber recycle	Wet air pollution control system used to capture acid gases. Water is neutralized and continuously recirculated. This system can significantly reduce the volume of water discharged from WAPC equipment.	Steel Finishing
Hydrochloric acid regeneration	Hydrochloric acid recovery system that heats spent pickle liquor to decompose iron oxide into ferric oxide and hydrogen chloride (HCl). The HCl is reabsorbed in water and returned to the process bath. The process reduces the amount of spent acid generated by the facility. Also reduces the amount of neutralization treatment chemicals needed and the mass of chlorides discharged.	Steel Finishing
Sulfuric acid recovery	Sulfuric acid recovery system that precipitates and removes iron as ferrous sulfate from the spent pickle liquor. The resulting sulfuric acid can be returned to the process bath. This process reduces the amount of spent acid generated by the facility. Also reduces the amount of neutralization treatment chemicals needed and the mass of sulfates discharged.	Steel Finishing
Acid purification and recycle	Nitric/hydrofluoric acid is purified by adsorption on a bed of alkaline anion exchange resin that separates the acid from metal ions. Acid is desorbed from the resin with water and returned to the process bath. This process can reduce the amount of spent acid generated by the facility. Also reduces the amount of neutralization treatment chemicals needed and the mass of anions such as nitrate, sulfate, and fluoride discharged.	Steel Finishing

Table 8-1 (Continued)

Technology	Description	Applicable Subcategories
Wastewater Minimization and Pollution Prevention (continued)		
In-tank filtration	Paper, cloth, cartridge, or plastic filters used to extend process bath life or to remove solids from cold rolling solutions.	Steel Finishing
Magnetic separation of fines in cold rolling solution	Magnetic separators are installed in rolling solution collection tanks or in a side-stream system to extend the life of rolling solutions.	Steel Finishing
Evaporation with condensate recovery	Energy-intensive and can have cross-media impacts. Not included in the technology options.	Cokemaking Ironmaking Integrated Steelmaking Integrated and Stand-Alone Hot Forming Non-Integrated Steelmaking and Hot Forming Steel Finishing
Process Modifications		
Effluent-free pickling process with fluid bed hydrochloric acid regeneration	Uses both the hydrochloric acid regeneration system and fume scrubber water to achieve zero discharge for hydrochloric acid pickling operations. A fluidized bed reactor is used to regenerate the acid (see description above). Fume scrubber water, used to cool the fluidized bed off-gases, is evaporated rather than blown down to end-of-pipe treatment.	Steel Finishing
Nitric-acid-free pickling	This proprietary technology uses a nitric-acid free solution containing an inorganic mineral base, hydrogen peroxide, stabilizing agents, wetting agents, brighteners, and inhibitors for stainless steel pickling/ This system can reduce the amount of nitrate/nitrite generated by the facility.	Steel Finishing
Effluent-free exhaust cleaning	Exhaust gases from stainless steel pickling are treated by a selective catalytic reduction (SCR) technology in lieu of a wet air pollution control device. Anhydrous ammonia is injected into the gas stream prior to a catalyst to reduce NO_x to nitrogen and water. This would eliminate wastewater generated from scrubbing of exhaust gases from stainless steel pickling operations.	Steel Finishing

Table 8-2

Wastewater Treatment and Sludge Handling Technologies

Technology	Description	Applicable Subcategories
Physical/Chemical Treatment		
Equalization	Tank that dampens fluctuations in flow and influent wastewater quality. Equalization will enhance performance of downstream equipment. Equalization is an end-of-pipe treatment technology.	Cokemaking Ironmaking Integrated Steelmaking Integrated and Stand-Alone Hot Forming Non-Integrated Steelmaking and Hot Forming Steel Finishing Other Operations
Tar removal	Recovers tar and oil though settling. This technology is demonstrated in the cokemaking industry, and improves the performance of free and fixed ammonia stills. Tar removal is an end-of-pipe treatment technology.	Cokemaking
Free and fixed ammonia distillation (stripping)	A column is used to remove ammonia with steam to transfer from the ammonia from liquid to the gas phase. Free ammonia is removed first, followed by conversion of fixed ammonia to free ammonia (using sodium hydroxide or soda ash), and subsequently removed. Free and fixed ammonia distillation is an end-of-pipe treatment technology.	Cokemaking
Cooling towers	Cooling towers control water temperature through contact of air with the water. Cooling towers are used in both in-process and end-of-pipe treatment systems.	Cokemaking Ironmaking Integrated Steelmaking Integrated and Stand-Alone Hot Forming Non-Integrated Steelmaking and Hot Forming Other Operations
Shell-and-tube heat exchangers	Indirect contact device that transfers heat from one fluid to another. Shell-and-tube heat exchangers are most common. Heat exchangers are used in end-of-pipe treatment systems.	Cokemaking
Alkaline chlorination/ breakpoint chlorination	Alkaline chlorination oxidizes cyanide with incidental removals of ammonia and phenolics. Cyanide is converted to cyanate and then to bicarbonate and nitrogen using chlorine or sodium hypochlorite. Breakpoint chlorination targets ammonia with incidental removals of cyanide and phenolics. Ammonia is oxidized to nitrogen using chlorine or sodium hypochlorite. These technologies are end-of-pipe systems.	Cokemaking Ironmaking

Table 8-2 (Continued)

Technology	Description	Applicable Subcategories
Physical/Chemical Treatment (continued)		
Cyanide precipitation	Proprietary technology that adds iron to cyanide-laden wastewater to precipitate an insoluble iron-cyanide complex. Cyanide precipitation is an end-of-pipe treatment technology.	Cokemaking
Ozone oxidation	Ozone oxidizes cyanide to bicarbonate and nitrogen. Ozone also oxidizes other iron and steel pollutants of concern, such as ammonia and organic compounds. This technology is considered end-of-pipe treatment.	Cokemaking Ironmaking
Gravity flotation	Nonemulsified oil is allowed to rise to the surface of the wastewater and is removed by an oil skimmer. Typical skimming devices include disk, belt, and drum skimmers. Gravity flotation is used for in-process and end-of-pipe treatment.	Integrated and Stand-Alone Hot Forming Non-Integrated Steelmaking and Hot Forming Steel Finishing
Oil/water separation	Wastewater containing nonemulsified oil enters a basin with inclined plates that trap the oil for removal. An API separator is the most common type of oil/water separator. Oil/water separators are typically used for end-of-pipe treatment.	Steel Finishing Other Operations
Chemical emulsion breaking and dissolved air flotation	Chemical emulsion breaking (CEB) is used for emulsified oily wastewaters. Chemicals are added to a mix tank to break the emulsions. Typically CEB is followed by dissolved air flotation (DAF) which injects air into the wastewater to cause the oil to rise to the surface. The oil can then be mechanically removed. CEB and DAF are end-of-pipe treatment technologies.	Steel Finishing
Ultrafiltration	Ultrafiltration is a pressure-driven membrane process to separate emulsified oils from wastewater without CEB. Ultrafiltration is an end-of-pipe treatment technology.	Steel Finishing
Carbon dioxide injection	Carbon dioxide is injected into the wastewater to remove hardness and regulate pH of wet-open and wet-suppressed BOF recycle systems. This allows more water to be reused in the recycle system. Carbon dioxide injection is used as part of in-process treatment.	Integrated Steelmaking

Table 8-2 (Continued)

Technology	Description	Applicable Subcategories
Physical/Chemical Treatment (continued)		
Hexavalent chromium reduction	Hexavalent chromium is reduced using sulfur dioxide, sodium bisulfite, sodium metabisulfite, or ferrous sulfate. Reduction allows chromium to be removed from solution by subsequent chemical precipitation. This is an end-of-pipe treatment technology.	Steel Finishing
Chemical precipitation	Removes metals from wastewater by converting soluble metals to insoluble salts. Typically lime, caustic, or magnesium hydroxide is used as the precipitant. Chemical precipitation is an end-of-pipe treatment technology.	Ironmaking Integrated Steelmaking Integrated and Stand-Alone Hot Forming Non-Integrated Steelmaking and Hot Forming Steel Finishing Other Operations
Ion exchange	Ion exchange is a reversible chemical reaction that exchanges ions in wastewater for ions of like charge on the surface of the ion exchange resin. When the resin is regenerated, the captured ions are concentrated and removed for disposal or reuse. Metals from plating rinses can be recovered using ion exchange. This can be an in-process or end-of-pipe treatment technology.	Steel Finishing
Scale pits with oil skimming	Scale pits are used for primary sedimentation of large particles from wastewater. This technology is typically used in high-rate recycle systems. Therefore, this is an in-process technology.	Integrated Steelmaking Integrated and Stand-Alone Hot Forming Non-Integrated Steelmaking and Hot Forming
Classifiers	Classifiers use screw or rake systems for primary solids removal in recycle systems. Therefore, this is an in-process technology.	Integrated Steelmaking Other Operations
Clarification/ sedimentation	Solids are removed by gravity sedimentation in clarifiers. Clarifiers may be either rectangular or circular and are designed with a hydraulic residence time sufficient for solids removal. This technology can be used with both in-process or end-of-pipe treatment systems.	Ironmaking Integrated Steelmaking Integrated and Stand-Alone Hot Forming Non-Integrated Steelmaking and Hot Forming Steel Finishing Other Operations

Table 8-2 (Continued)

Technology	Description	Applicable Subcategories
Physical/Chemical Treatment (continued)		
Microfiltration	Solids are separated from wastewater using a pressure-driven membrane process. This technology can be used with both in-process or end-of-pipe treatment systems.	Ironmaking Integrated Steelmaking Integrated and Stand-Alone Hot Forming Non-Integrated Steelmaking and Hot Forming Steel Finishing Other Operations
Multimedia filtration	Multimedia filtration uses a bed of granular particles as the filter medium for solids removal. When the pressure drop across the filter is large enough to impede flow, it is cleaned by forcing wash water through the bed in the reverse direction of original wastewater flow. Multimedia filtration can be used as in-process or end-of-pipe treatment. Also called mixed-media filtration.	Cokemaking Ironmaking Integrated Steelmaking Integrated and Stand-Alone Hot Forming Non-Integrated Steelmaking and Hot Forming Steel Finishing Other Operations
Granular activated carbon (GAC)	GAC removes dissolved organic compounds from wastewater streams via adsorption. The organic compound collects on and adheres (bond) to the surface of the carbon. When all bonding sites are occupied, the carbon is considered "spent" and must be regenerated to remove the accumulation organic compounds. GAC is an end-of-pipe treatment technology.	Cokemaking Ironmaking
Biological Treatment		
Biological nitrification using conventional activated sludge	Biological nitrification uses microorganisms to convert ammonia to nitrate in an aerobic environment using a conventional activated sludge system. Wastewater and the microorganisms are aerated in a reactor for a specified period of time and then settled in a clarification unit. A portion of the microorganisms are recirculated to the reactor, and a portion is wasted. This is an end-of-pipe treatment technology.	Cokemaking
Biological nitrification using sequencing batch reactors (SBRs)	SBRs use the same biological processes as a conventional activated sludge biological nitrification system. The difference is that all steps of the process are carried out in one tank. An SBR is an end-of-pipe treatment technology.	Cokemaking

Table 8-2 (Continued)

Technology	Description	Applicable Subcategories
Biological Treatment (continued)		
Biological nitrification using attached growth	Attached growth systems use the same biological processes as a conventional activated sludge biological nitrification system. The difference is that the microbes are attached to a rigid supporting media. An attached growth system is an end-of-pipe treatment technology.	Cokemaking
Biological denitrification	Denitrification also uses the metabolic processes of microorganisms to convert nitrate to nitrogen gas. This process must be conducted in the absence of oxygen for denitrification to occur. This is an end-of-pipe treatment technology.	Cokemaking
Sludge Treatment and Disposal		
Gravity thickening	Sludge is fed from a clarifier or settling tank into the thickener where gravity separates the supernatant from the sludge, increasing the sludge density. The thickened sludge is further dewatered by other equipment of disposed. Thickening can dewater sludge from in-process or end-of-pipe treatment systems.	Cokemaking Ironmaking Integrated Steelmaking Integrated and Stand-Alone Hot Forming Non-Integrated Steelmaking and Hot Forming Steel Finishing Other Operations
Rotary vacuum filtration	A rotary vacuum filter consists of a perforated plate steel drum covered with a filter cloth. A diatomaceous earth precoat is used to prevent small suspended particles from passing through the filter to the center of the drum where filtrate is removed. The drum picks up sludge as it rotates. A scraper is used to remove filter cake from the surface of the earth precoat to prevent a thickness that would not adhere to the filter. Rotary vacuum filtration can dewater sludge from in-process or end-of-pipe treatment systems.	Cokemaking Ironmaking Integrated Steelmaking Integrated and Stand-Alone Hot Forming Non-Integrated Steelmaking and Hot Forming Steel Finishing Other Operations
Pressure filtration	A series of parallel plates, covered with filter cloth, are filled with sludge and then pressed together by a hydraulic ram. The liquid (filtrate) escapes through the filter cloth while the solids are retained. The sludge is then collected in a hopper or drum for disposal. Pressure filtration can dewater sludge from in-process or end-of-pipe treatment systems.	Cokemaking Ironmaking Integrated Steelmaking Integrated and Stand-Alone Hot Forming Non-Integrated Steelmaking and Hot Forming Steel Finishing Other Operations

Table 8-2 (Continued)

Technology	Description	Applicable Subcategories
Sludge Treatment and Disposal (continued)		
Belt filtration	Sludge is fed between two continuous belts set one above another. The sludge passes through three process zones: the drainage zone (dewatering by gravity), pressure zone (dewatering by pressure of rollers on the belts), and the shear zone (final dewatering through shear forces). The dewatered sludge is removed by a scraper. Belt filters are typically used to dewater sludge from an end-of-pipe biological treatment system.	Cokemaking Ironmaking Integrated Steelmaking Integrated and Stand-Alone Hot Forming Non-Integrated Steelmaking and Hot Forming Steel Finishing Other Operations
Centrifugation	Sludge is pumped into a cone-shaped drum. The drum is rotated to generate centrifugal forces to concentrate solids to the walls of the drum. These solids are continuously removed by an auger, or screw conveyer. Centrifuges can dewater sludge from in-process or end-of-pipe treatment systems.	Cokemaking Ironmaking Integrated Steelmaking Integrated and Stand-Alone Hot Forming Non-Integrated Steelmaking and Hot Forming Steel Finishing Other Operations
Sludge drying	Sludge is heated to remove excess liquid. Various design variations exist; the most common sludge drying unit uses an auger or conveyer to move a thin layer of sludge through a drying region and discharge it to a hopper. Sludge drying can dewater sludge from in-process or end-of-pipe treatment systems.	Cokemaking Ironmaking Integrated Steelmaking Integrated and Stand-Alone Hot Forming Non-Integrated Steelmaking and Hot Forming Steel Finishing Other Operations
Best Management Practices		
Best management practices	Many plant maintenance and good housekeeping management practices can reduce wastewater or pollutant generation, and the need for treatment, and help maximize process efficiency.	Cokemaking Ironmaking Integrated Steelmaking Integrated and Stand-Alone Hot Forming Non-Integrated Steelmaking and Hot Forming Steel Finishing

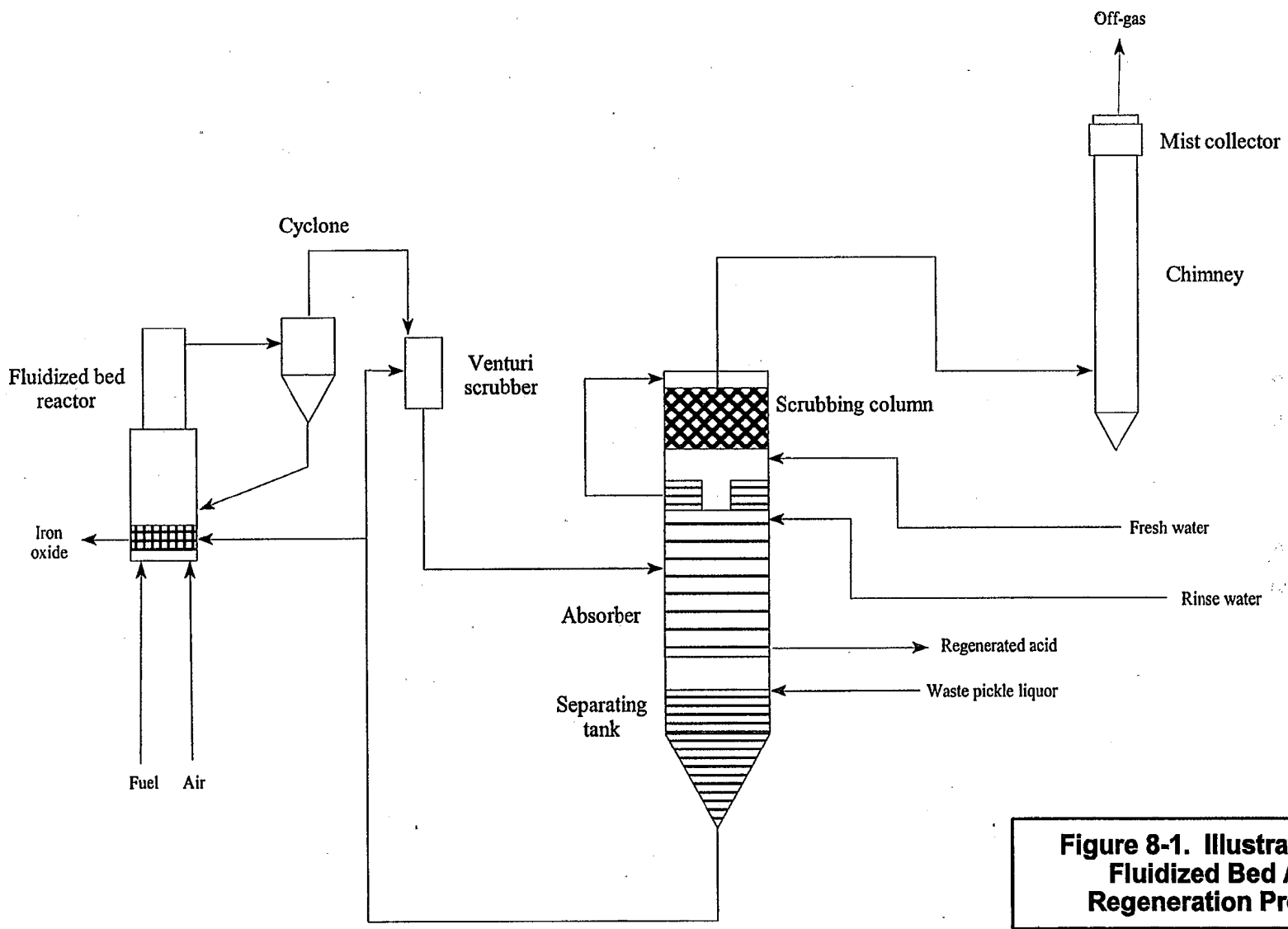

Figure 8-1. Illustration of a Fluidized Bed Acid Regeneration Process

Regen	3/27/02	EPA

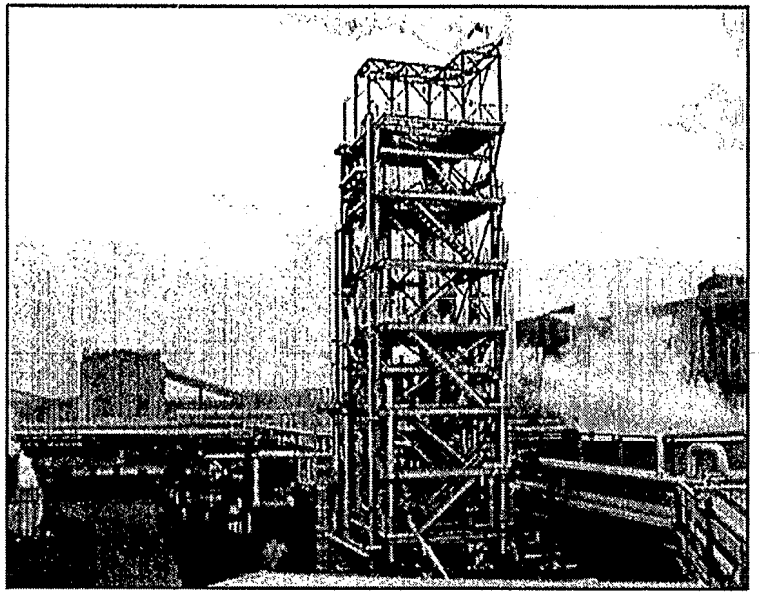

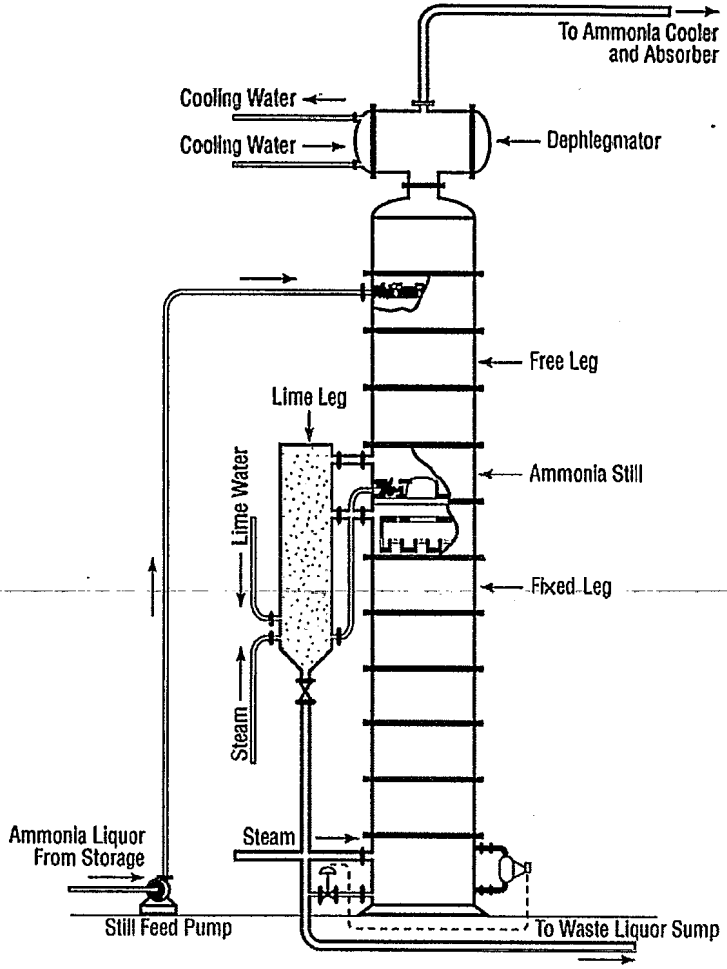

Figure 8-2. Typical Free and Fixed Ammonia Distillation Column

AStill	11/05/01	EPA

Sources: Site visit, U.S. Steel Gary Works, Gary, Indiana.
Association of Iron and Steel Engineers, The Making, Shaping, and Treating of Steel, ISBN 0-930767-00-4; Pittsburgh, PA; 1985.

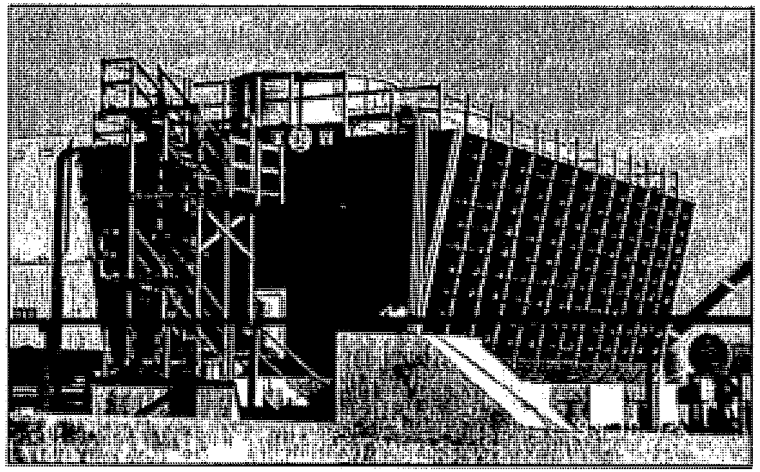

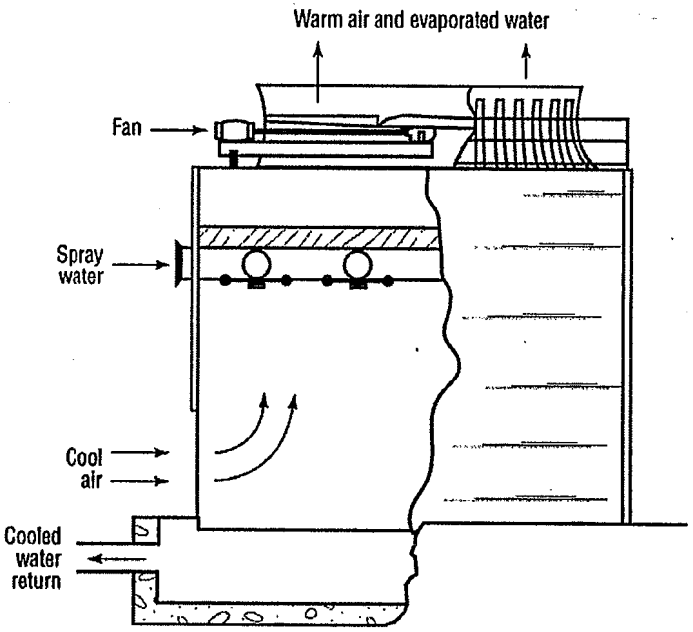

Sources: Davis & Spence Pty Ltd. Cooling Tower. http://www.davisandspence.com.au/photo.htm.,
Marley Cooling Towers. Cooling Tower Performance: Basic Theory and Practice.
http://www.marleyct.com/pdf_forms/CTII-1.pdf

Figure 8-3. Typical Cooling Tower

CTower	11/05/01	EPA

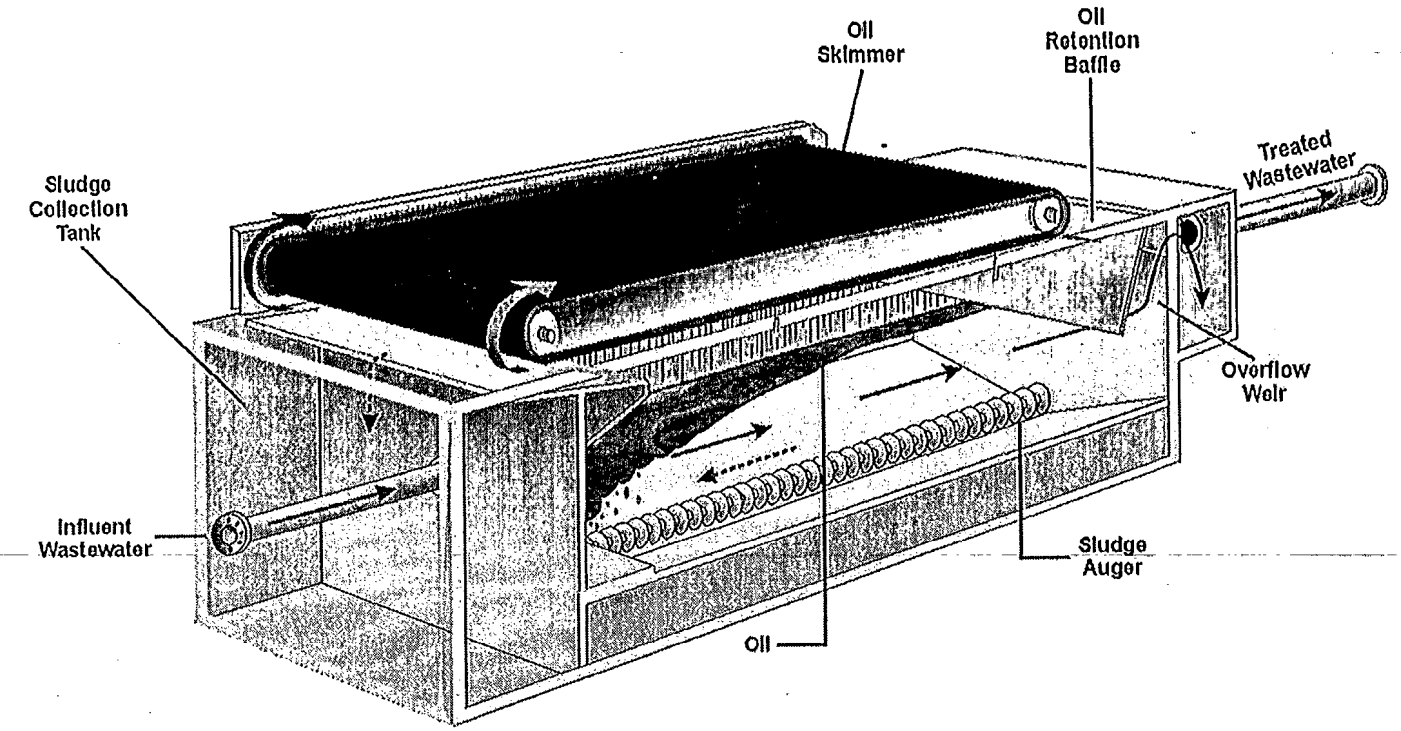

Wastewater flow
Sludge flow

Figure 8-4. Typical Oil/Water Separator

O/WSep	10/03/00	EPA

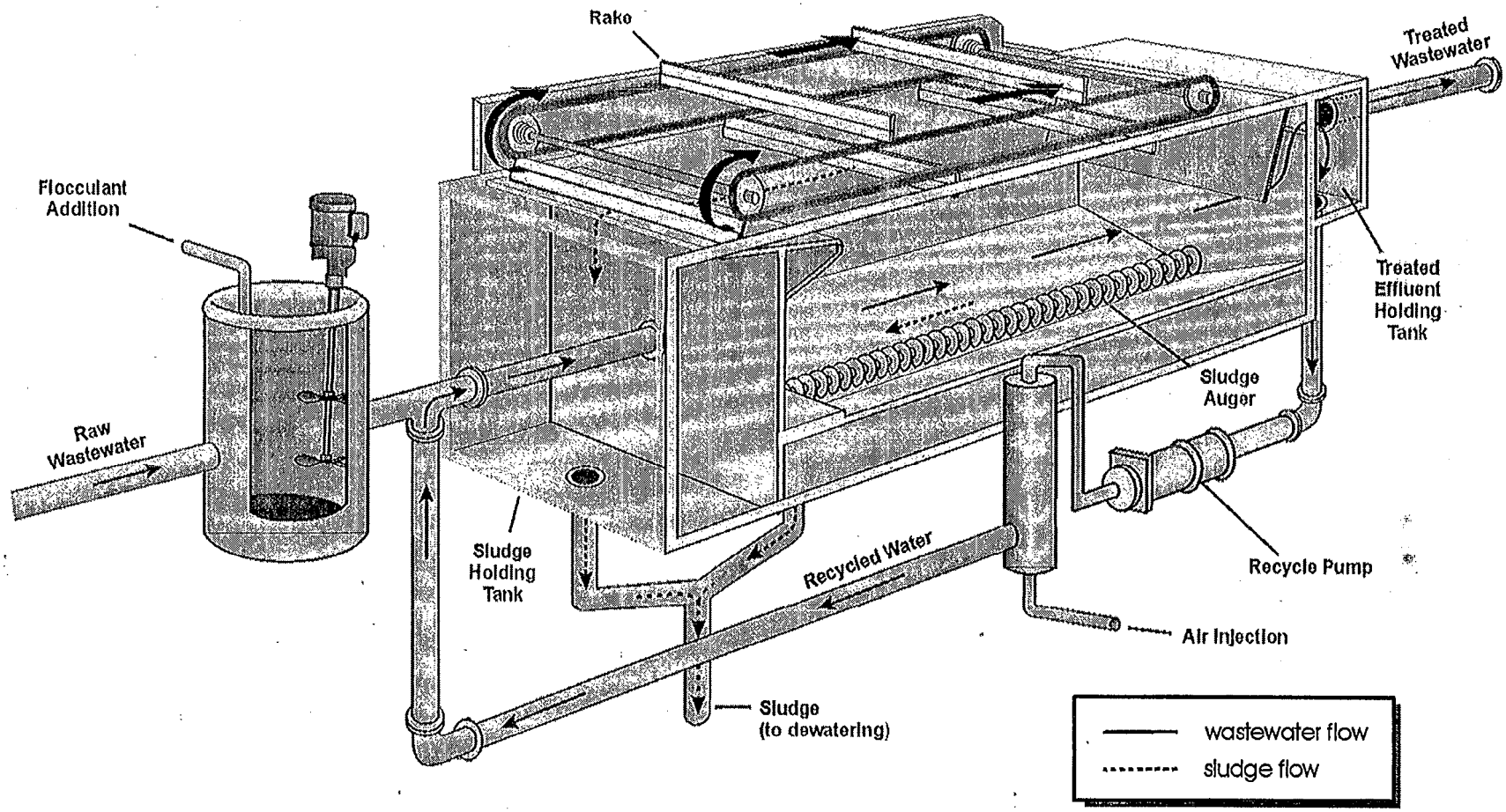

Figure 8-5. Typical Dissolved Air Flotation System

DAF	10/03/01	EPA

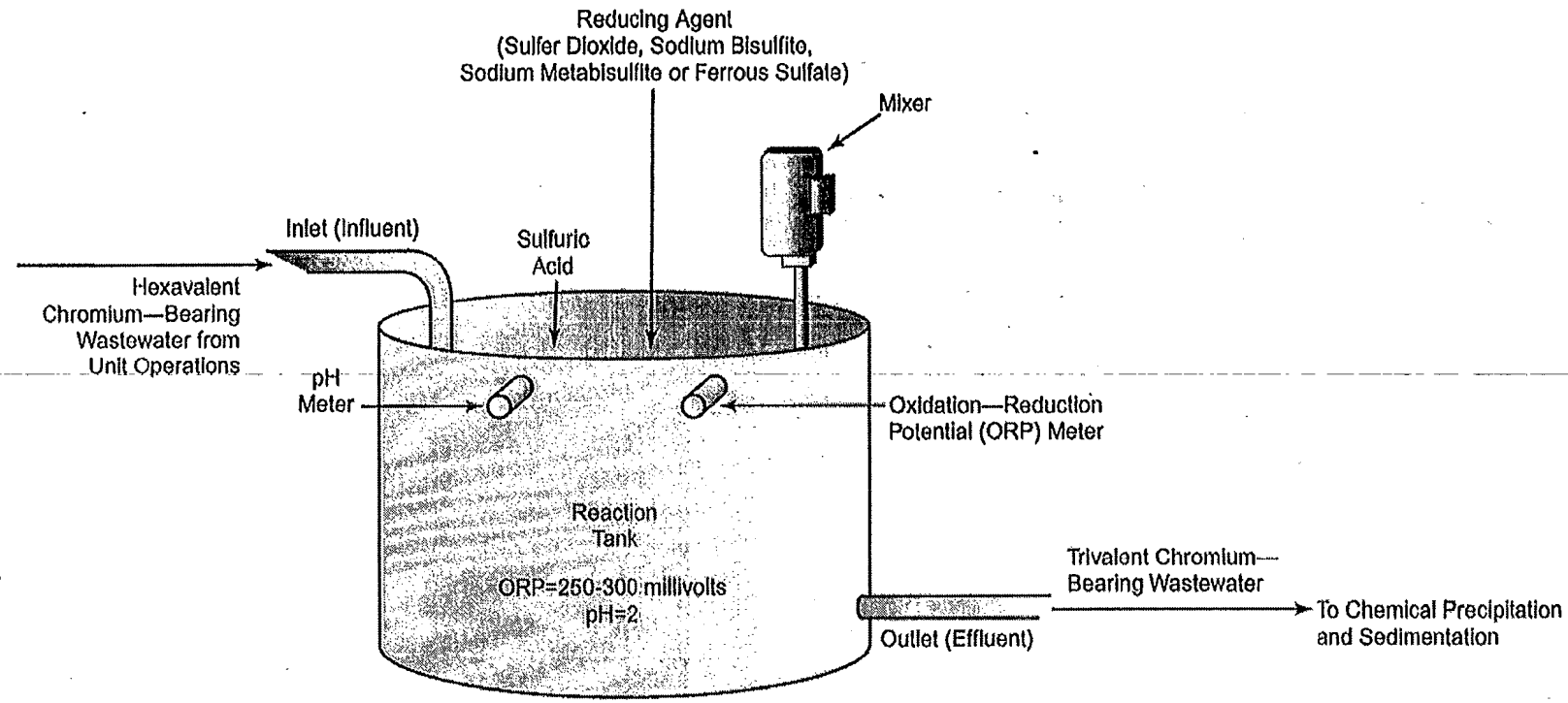

Figure 8-6. Typical Hexavalent Chromium Reduction System

Hexchrome	10/31/01	EPA

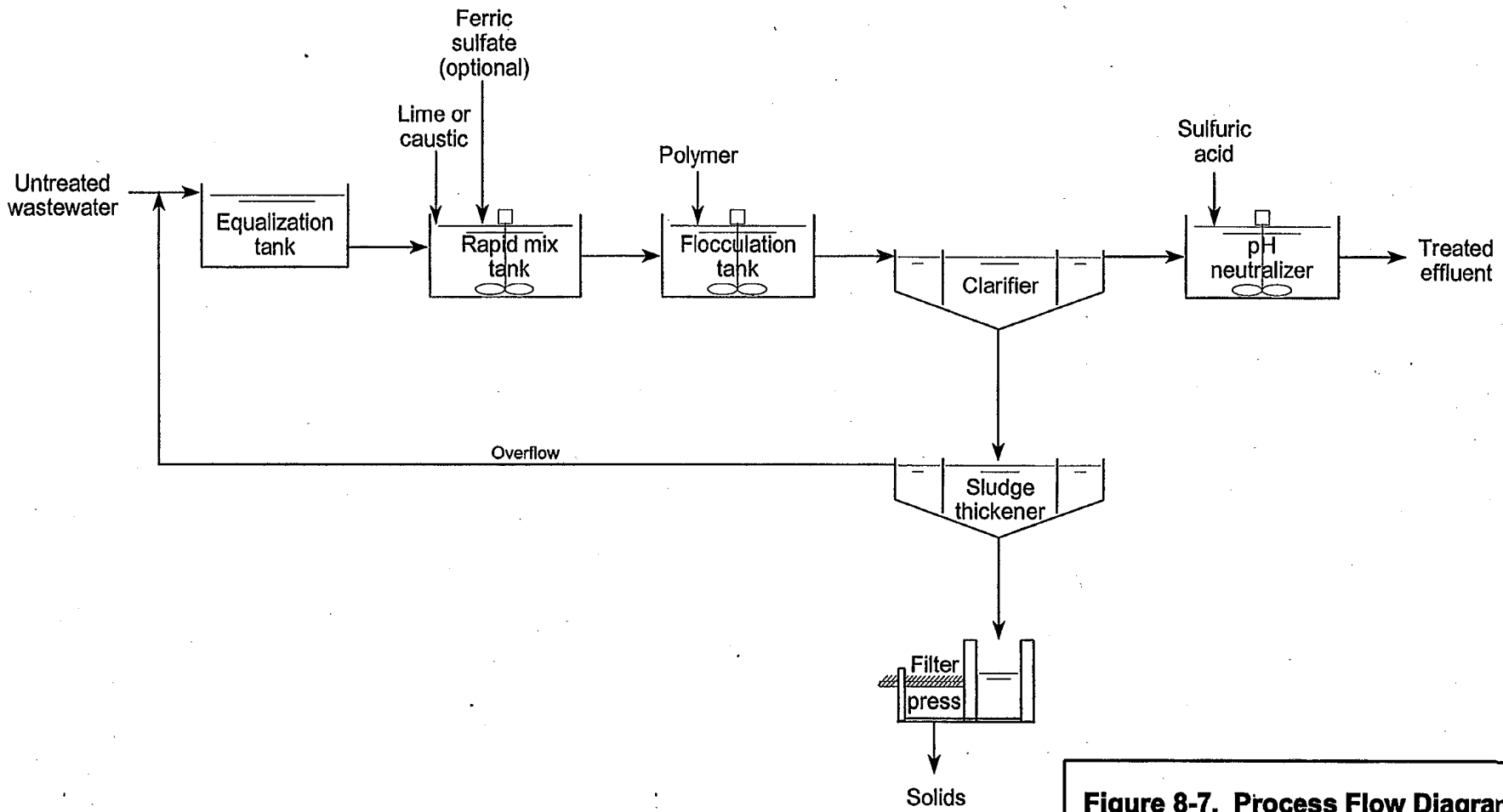

Figure 8-7. Process Flow Diagram of a Typical Chemical Precipitation System for Metals Removal

PPT	10/03/00	EPA

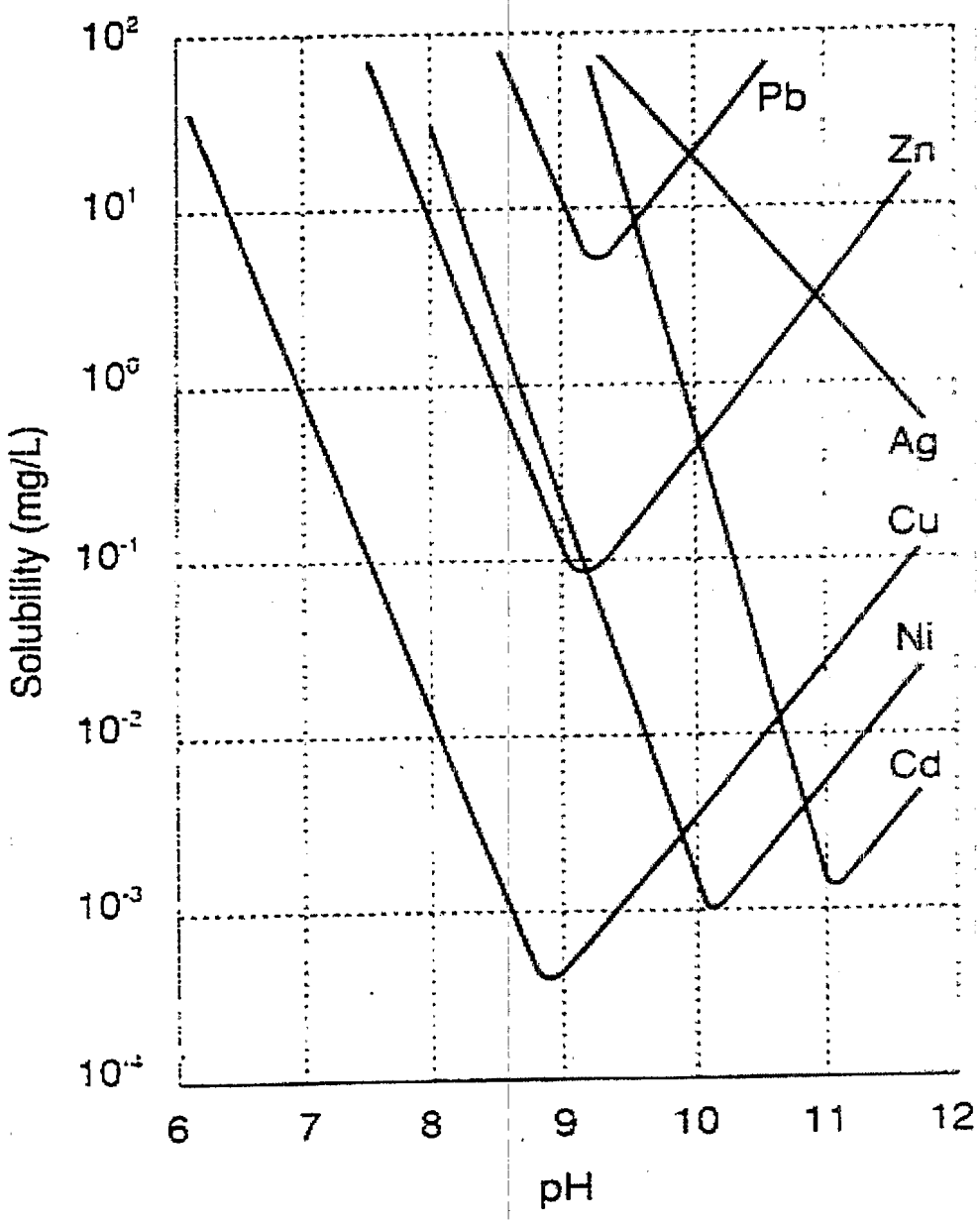

Figure 8-8. Minimum Solubilities of Various Metals Hydroxides

Solubility	10/03/00	EPA

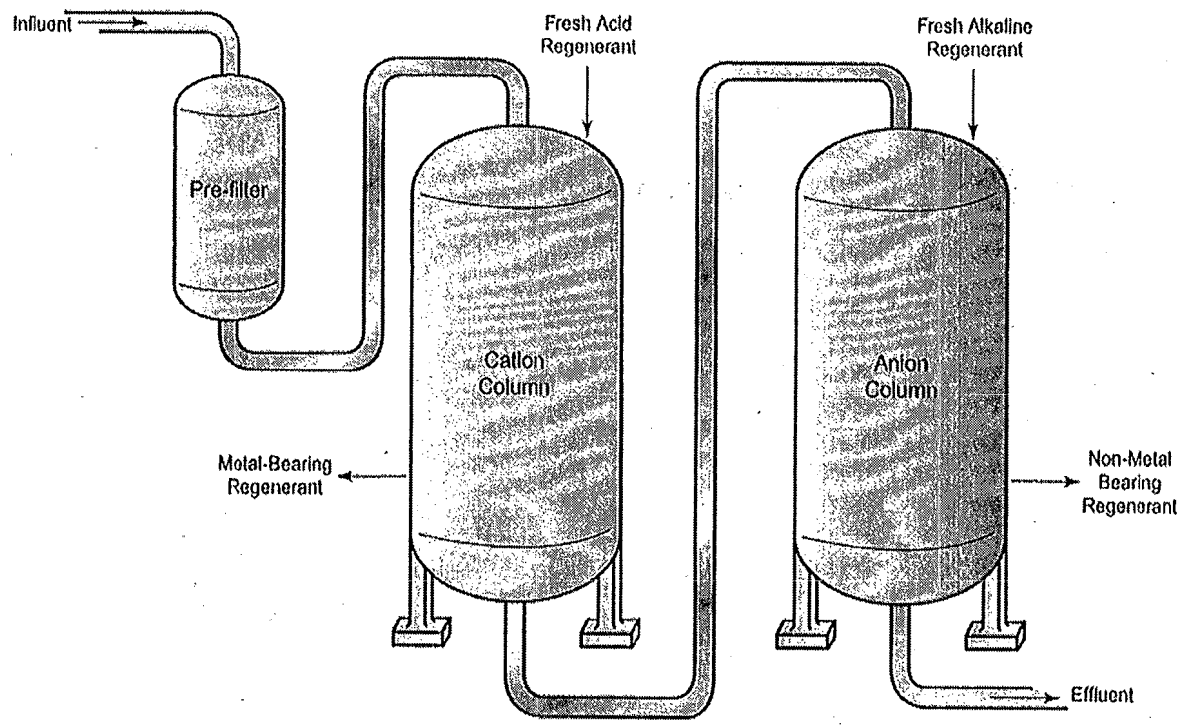

Figure 8-9. Typical Ion Exchange System

ChemPpt	11/01/01	EPA

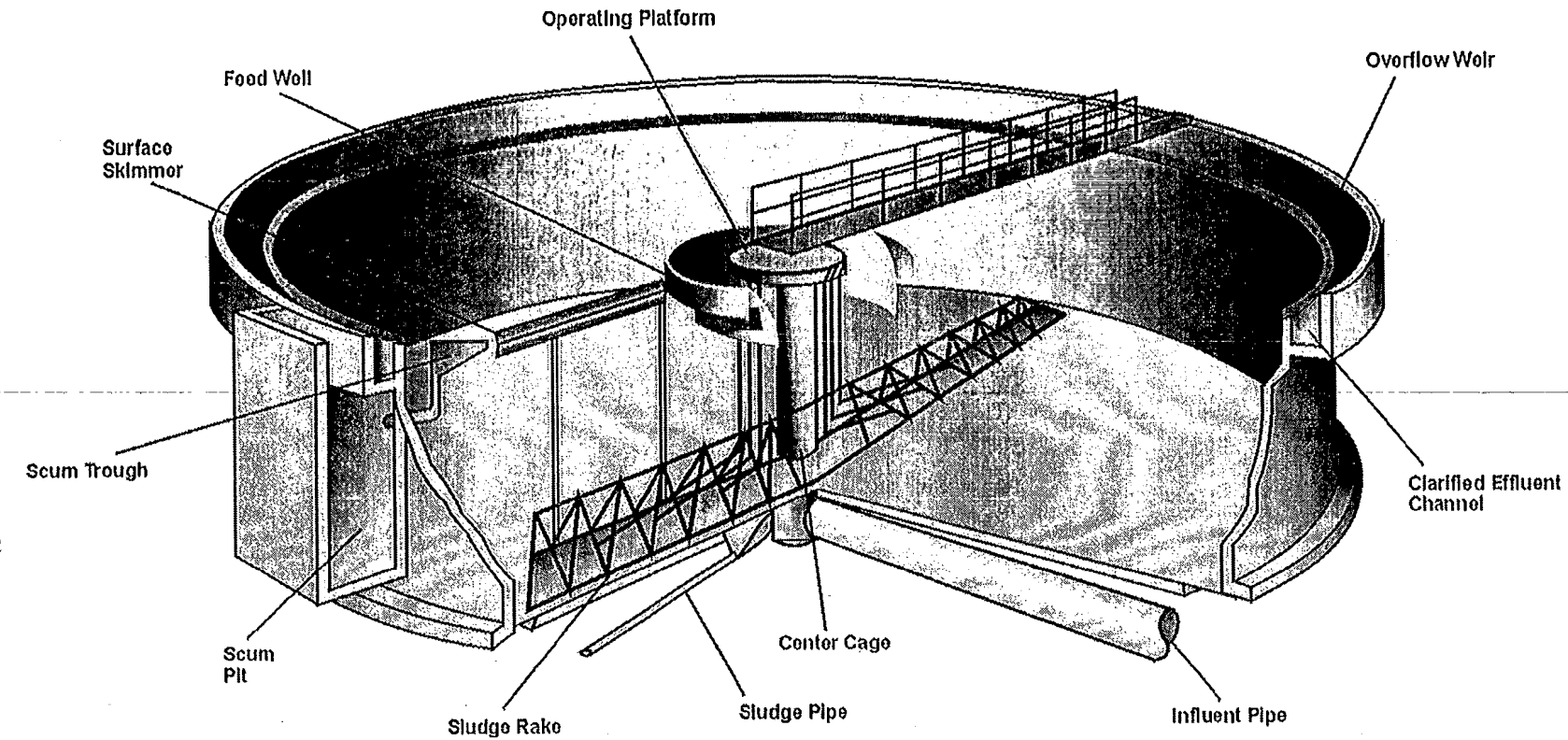

Figure 8-10. Typical Clarification System

CLARIFIER	10/03/01	EPA

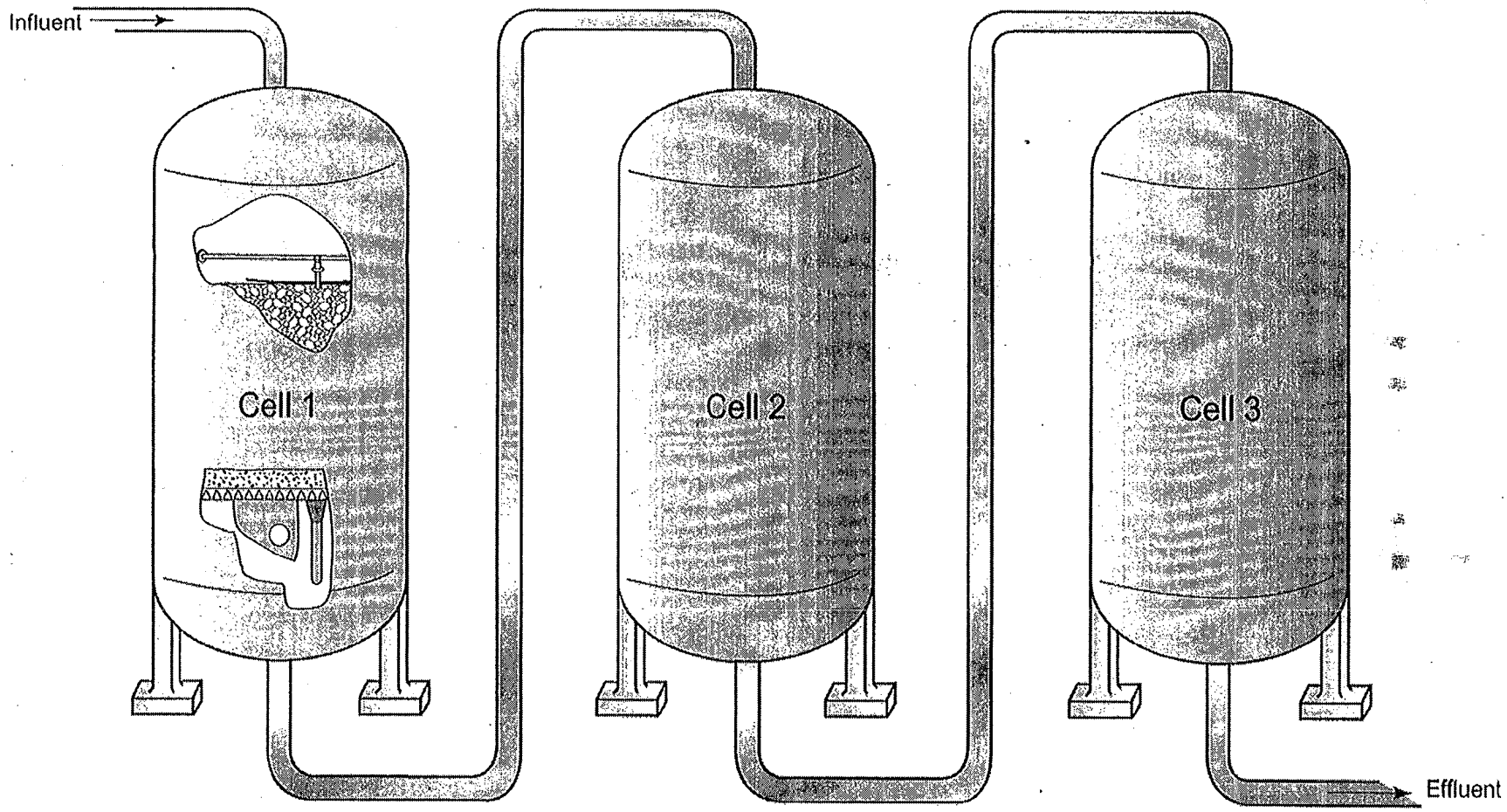

Figure 8-11. Typical Multimedia Filtration System

FILTER	9/27/00	EPA

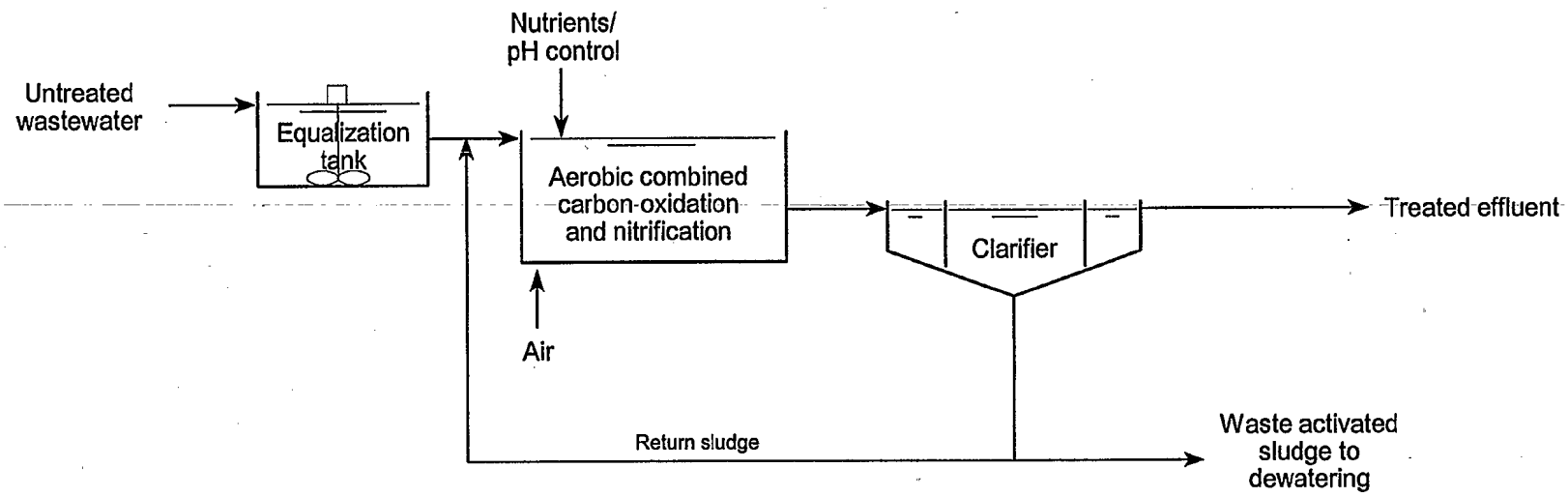

Figure 8-12. Process Flow Diagram of a Typical Biological Treatment System

Bio	10/03/00	EPA

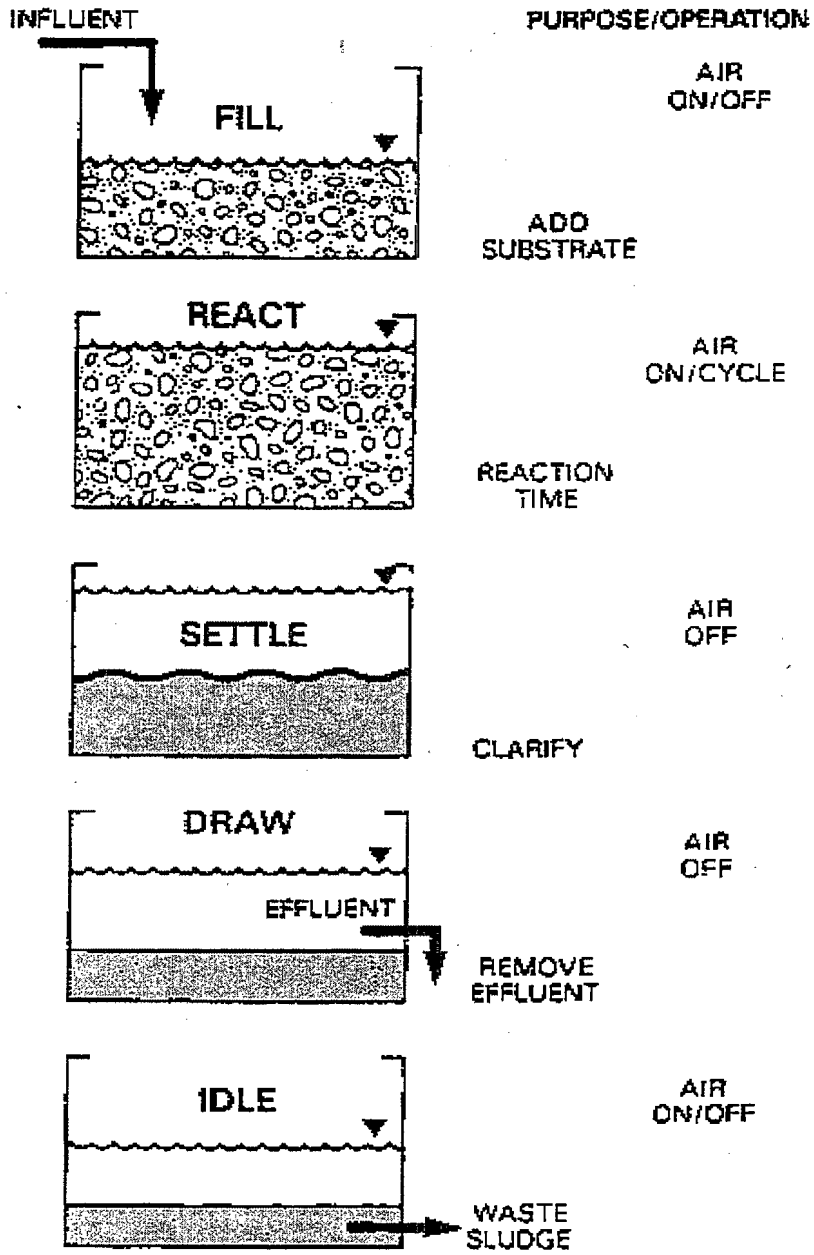

Figure 8-13. Typical Sequencing Batch Reactor Operation for One Cycle

SBR	4/03/02	EPA

A. End-of-pipe denitrification system using an external carbon source

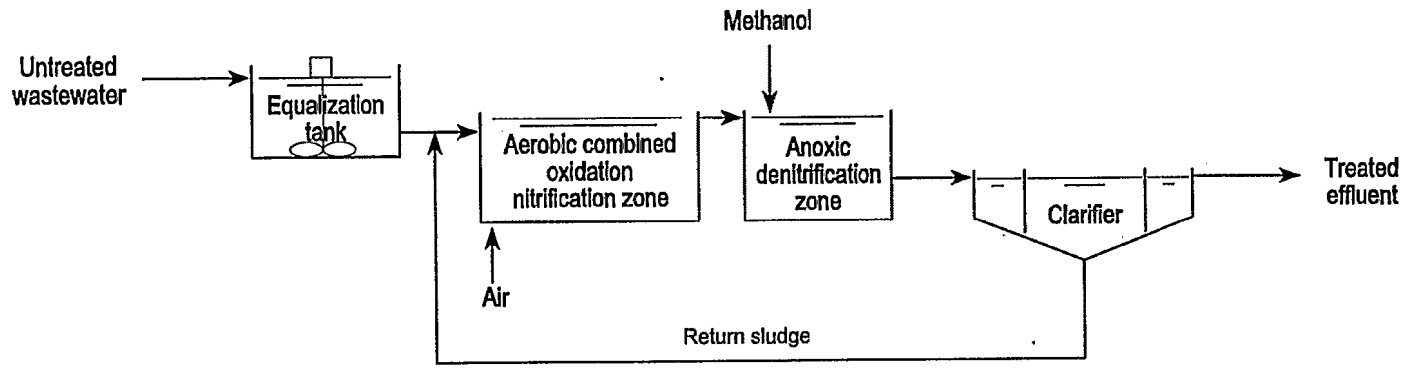

B. Recycle denitrification system using untreated wastewater as a carbon source

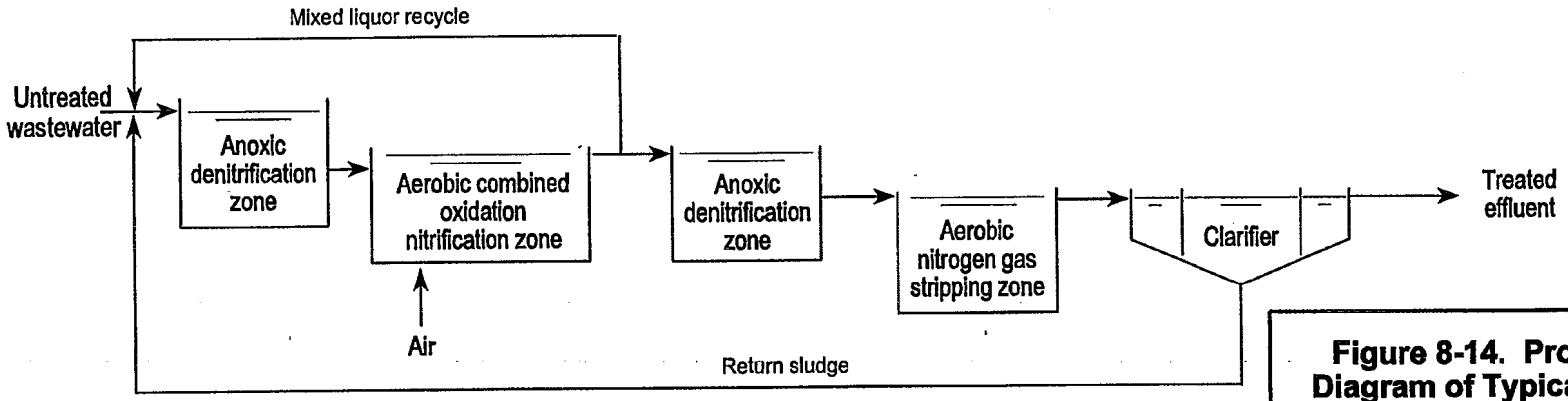

Figure 8-14. Process Flow Diagram of Typical Biological Denitrification Systems

Denit	10/03/00	EPA

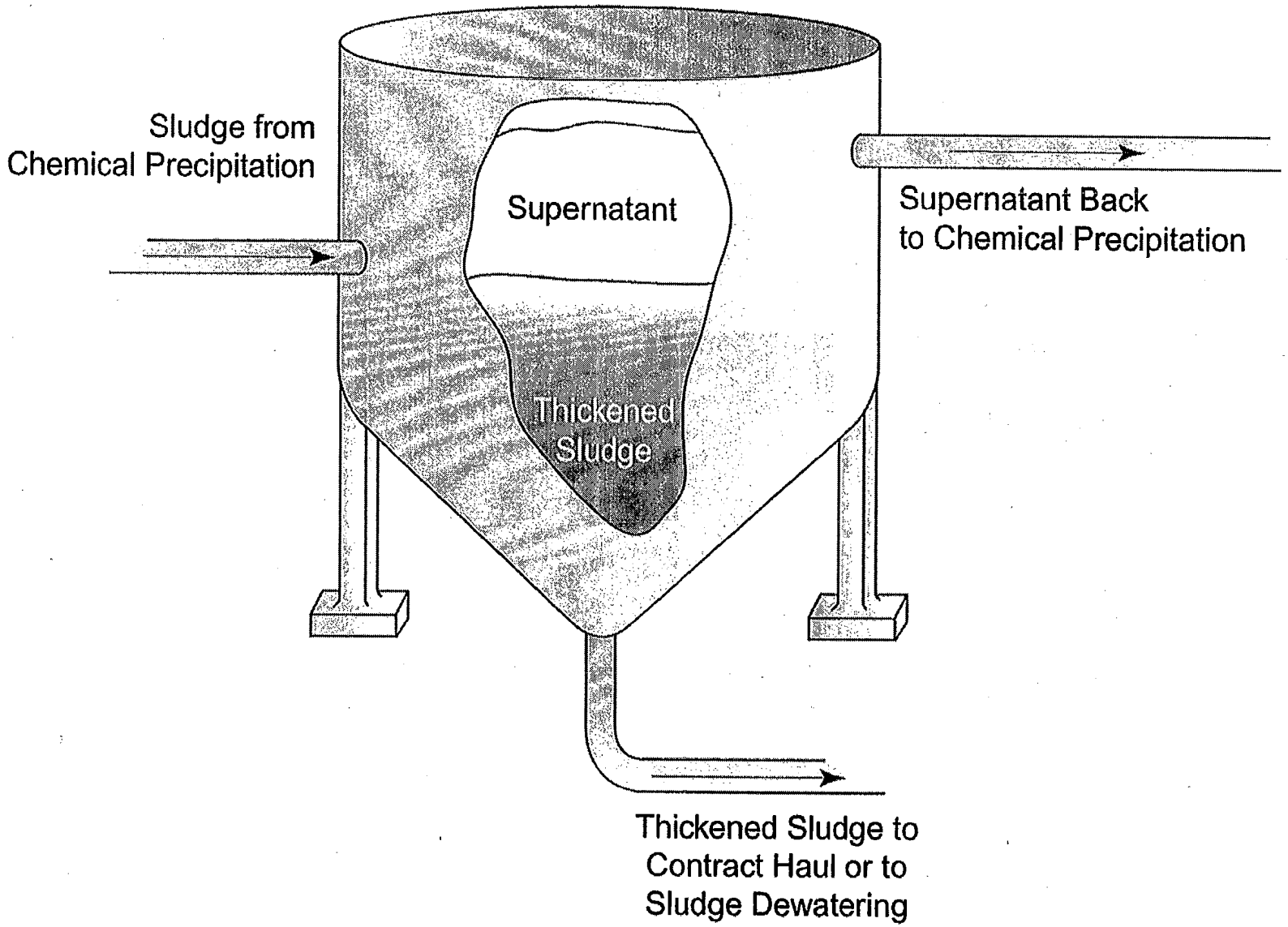

Figure 8-15. Typical Gravity Thickener

THICKENER	9/27/00	EPA

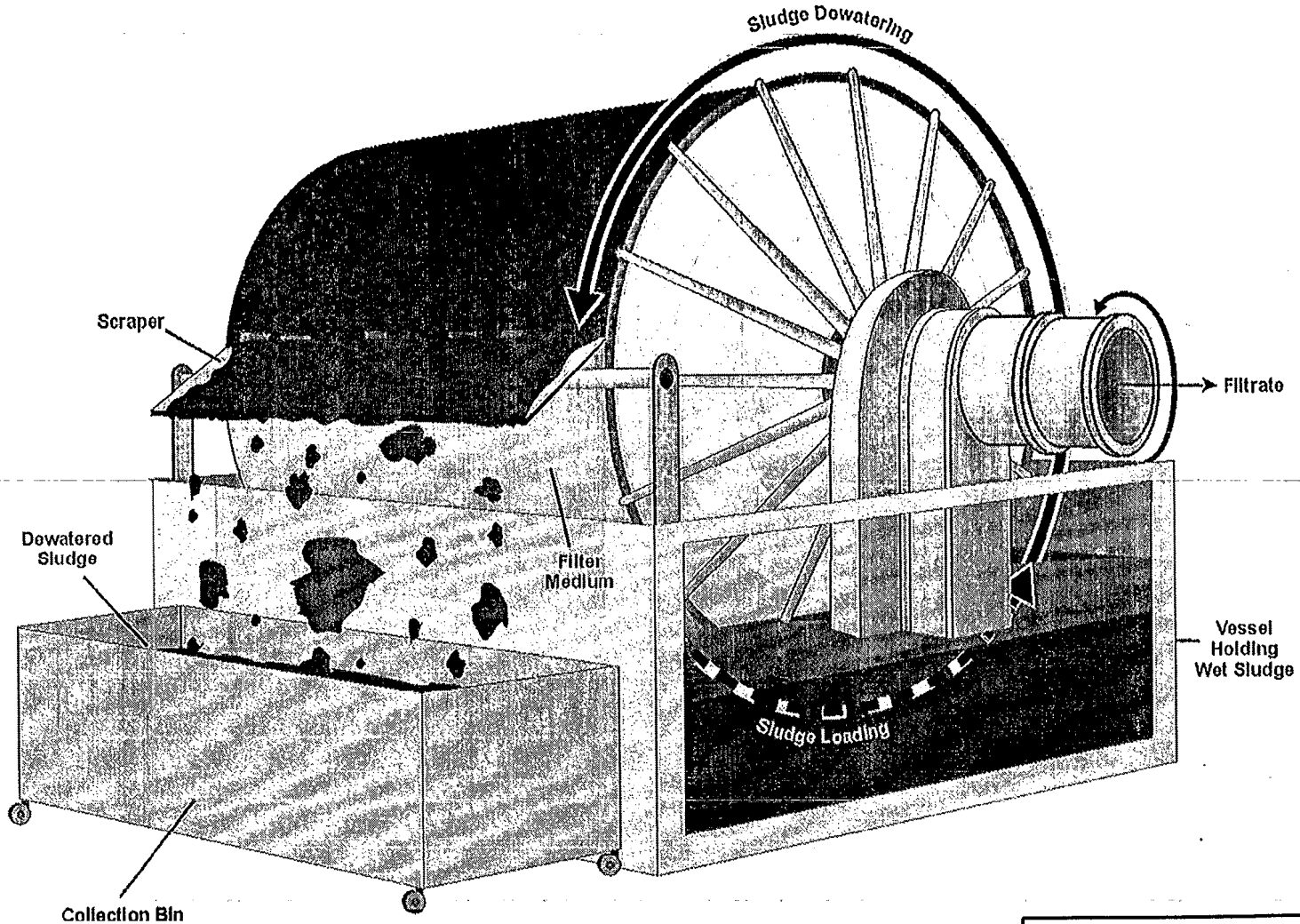

Figure 8-16. Typical Vacuum Filtration System

VacFilt	10/03/01	EPA

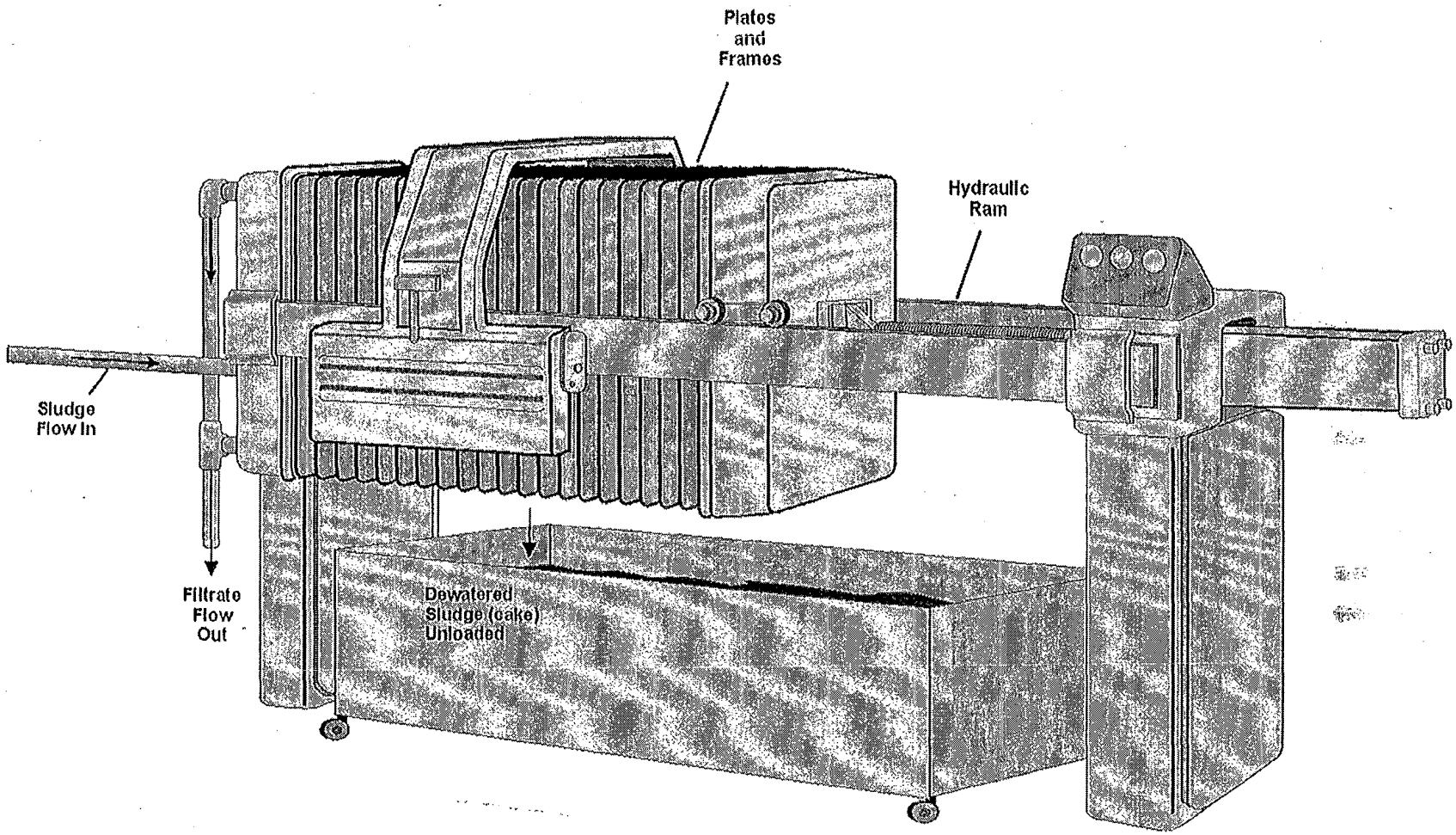

Figure 8-17. Typical Plate-and-Frame Filter Press

FilterPress	10/03/01	EPA

SECTION 9

TECHNOLOGY OPTIONS CONSIDERED AS THE BASIS OF THE REGULATION

This section presents the technology options considered by EPA as the basis for the final effluent limitations guidelines and standards for the iron and steel industry. The limitations and standards discussed in this section are Best Practicable Control Technology Currently Available (BPT), Best Conventional Pollutant Control Technology (BCT), Best Available Technology Economically Achievable (BAT), New Source Performance Standards (NSPS), Pretreatment Standards for Existing Sources (PSES), and Pretreatment Standards for New Sources (PSNS).

In developing the final regulation, EPA used a focused rulemaking approach, conducting several data gathering and analysis activities concurrently and assessing only a limited number of technology options. This is unlike the traditional approach where EPA conducts these efforts consecutively and considers a wider range of wastewater management and treatment technology options. This focused rulemaking approach is feasible for the iron and steel regulation because the Agency has acquired a good understanding of the industry, its associated pollutants, and the available control and treatment technologies from its prior rulemaking efforts. EPA evaluated responses to industry surveys, data collected from Agency site visits and sampling episodes, and technical literature to determine "state-of-the-art" pollution control technologies to form the bases of the technology options considered for the final rule. EPA's technology options incorporate pollutant control technologies that demonstrate effective use in the iron and steel industry (i.e., consistent effluent quality with a high degree of pollutant reduction for pollutants of concern, supported by analytical data), minimize water use, and result in minimal non-water quality environmental impacts. The Agency did not perform detailed analyses on pollution control technologies that, after preliminary analyses, were determined to require significant capital and operating and maintenance costs without substantial pollutant removals. Because of the focused rulemaking approach, generally only one option (in addition to a regulatory option not to revise) is presented for each subcategory. Furthermore, the presented option usually is an improvement in water management and operation of the wastewater treatment technologies that are currently used by the industry.

Extensive stakeholder involvement was also an important element of the focused rulemaking process. EPA met with industry representatives, citizen and environmental groups, and other stakeholders at various stages of the rulemaking process to discuss the preferred technology options and to identify issues of concern. Input from stakeholders allowed EPA to refine its final technology options.

While EPA establishes effluent limitations guidelines and standards based on a particular set of in-process and end-of-pipe treatment technology options, EPA does not require a discharger to use these technologies. Rather, the technologies that may be used to treat wastewater are left entirely to the discretion of the individual treatment plant operator, as long as the facility can achieve the numerical discharge limitations and standards, as required by Section §301(b) of the Clean Water Act. Direct and indirect dischargers can use any combination of

process modifications, in-process technologies, and end-of-pipe wastewater treatment technologies to achieve the effluent limitations guidelines and standards.

Sections 9.1 through 9.7 present descriptions of the technology options evaluated for the final effluent limitations guidelines and standards in each subcategory. Tables 9-1 through 9-7 show the in-process and end-of-pipe treatment used in industry as reported in the U.S. EPA Collection of 1997 Iron and Steel Industry Data (detailed and short surveys).

9.1 Cokemaking

9.1.1 By-Product Recovery Cokemaking

Best Practicable Control Technology Currently Available (BPT)

EPA is not revising any existing BPT limitations for the by-products recovery segment of this subcategory (which, in the 1982 regulation, was divided between "iron and steel" and "merchant" coke plants).

Best Conventional Pollutant Control Technology (BCT)

EPA is not revising any existing BCT limitations for the by-products recovery segment of this subcategory (which, in the 1982 regulation, was divided between "iron and steel" and "merchant" coke plants) because EPA identified no technologies that achieve greater removals of conventional pollutants than the technology basis for the current BPT and that pass the BCT cost test.

Best Available Technology Economically Achievable (BAT)

Of the iron and steel subcategories, by-product recovery cokemaking has the widest range of treatment technologies used by the industry. During the development of this rulemaking, EPA considered four BAT options for direct discharging by-product recovery cokemaking facilities. The four options rely on a combination of physical/chemical and biological treatment to reduce the discharge of pollutants from by-product recovery cokemaking facilities. The four technology options are:

- Option 1 (BAT-1): Emission control scrubber blowdown to coke quench stations, oil and tar removal, flow equalization prior to ammonia distillation (stripping), free and fixed ammonia distillation (stripping), indirect cooling, flow equalization before biological treatment, biological treatment and secondary clarification, and sludge dewatering;

- Option 2 (BAT-2): BAT-1 treatment with cyanide precipitation and sludge dewatering prior to biological treatment;

- Option 3 (BAT-3): BAT-1 with breakpoint chlorination following biological treatment; and
- Option 4 (BAT-4): BAT-3 with multimedia filtration and granular activated carbon after breakpoint chlorination.

As discussed in the 2000 proposal, EPA dropped BAT-2 and BAT-4 from further consideration because BAT-2 is a proprietary technology which would make costs and economic achievability difficult to predict, and BAT-4 achieves pollutant removals equivalent to BAT-3 but was much more costly. Therefore, for the final rule, EPA considered only BAT-1 and BAT-3 as the basis for revising the cokemaking subcategory effluent limitations guidelines and standards. Figures 9-1 and 9-2 show the BAT-1 and BAT-3 treatment systems considered for the 13 direct discharging by-product recovery cokemaking facilities. The following discussion explains each option in further detail.

BAT-1 is based on free and fixed ammonia distillation (stripping), or ammonia stills, and biological treatment with nitrification. Free and fixed ammonia distillation (stripping) is designed to remove free and fixed forms of ammonia and cyanide. In addition, it can also remove significant amounts of volatile and semi-volatile organics, such as naphthalene. Ammonia stills are tray-type distillation towers that use steam to strip the ammonia out of the waste ammonia liquor. Stills typically have two 'legs' for maximum ammonia removal. First, free ammonia is removed in the free leg, followed by conversion of the fixed ammonia by addition of lime, sodium hydroxide or soda ash. The converted ammonia is then removed in the fixed leg. The effectiveness of ammonia distillation depends greatly on efficient tar removal and equalization prior to the still. The efficiency of the still corresponds to the number of trays that the liquid must pass over before reaching the bottom. The tower diameter is a function of the wastewater flow rate. As shown in Table 9-1, 12 of the 13 direct discharging facilities use ammonia stills.

A second key component, biological treatment with nitrification, is designed to remove any additional ammonia, cyanide, phenol, and organic pollutants such as benzo(a)pyrene and naphthalene. The effectiveness of biological treatment depends on proper equalization and influent temperature prior to the biological treatment tank. Many sites use equalization tanks and heat exchangers ahead of the aeration basin. The sludge retention time (SRT) is also a key component for efficient operation. Nitrification is needed to remove ammonia. Efficient clarification following biological treatment is required to collect the microorganisms (activated sludge) for return to the aeration basin, as well as to lower the solids content in the effluent. Sound monitoring and operation of the biological system is also necessary. Air diffusers must be checked and cleaned to provide a consistent dissolved oxygen supply in the aeration basin. Excess biomass (sludge) must be wasted to maintain a constant microbe population in the system.

Biological treatment, used by 12 of the 13 direct dischargers, is the most common treatment technology at by-product recovery coke manufacturers. Ten of these sites use

conventional activated sludge systems; two sites use biofiltration as shown in Table 9-1. One direct discharger uses physical-chemical treatment rather than biological treatment.

BAT-3 is the same as BAT-1 with an additional breakpoint chlorination step. Breakpoint chlorination uses sodium hypochlorite or chlorine gas in a carefully controlled pH environment to remove ammonia, although incidental removals of cyanide and phenols will occur. The ammonia oxidizes to nitrogen gas, hydrochloric acid, and water; cyanide oxidizes to bicarbonate and nitrogen gas. The breakpoint chlorination reaction must occur at carefully controlled pH levels and has the possibility of chemical interferences when treating mixed wastes. Although U. S. cokemaking facilities do not use breakpoint chlorination, foreign facilities have successfully used this technology to treat cokemaking wastewater. EPA ultimately rejected BAT-3 for the reasons set forth in Section VIII.A.3.a of the preamble to the final rule.

For the final iron and steel regulation, EPA established BAT limitations for the by-product cokemaking subcategory based on BAT-1. EPA has concluded that the BAT-1 treatment system represents the best available technology economically achievable for this segment of this subcategory. There are several reasons supporting this conclusion. First, the BAT-1 technology is readily available to all cokemaking facilities. Approximately 75 percent of the facilities in this segment currently use it. Second, the BAT-1 technology will ensure a high level of removal of all cokemaking pollutants of concern. Well-operated free and fixed ammonia stills will remove gross amounts of ammonia-N, cyanide, and many organic pollutants while biological treatment with nitrification followed by secondary clarification will remove more ammonia-N, total phenolics (4AAP), and other organic constituents of the wastewater to low levels. Third, adoption of this level of control would represent a significant reduction in conventional, nonconventional, and toxic pollutants discharged into the environment by facilities in this subcategory. Even though 75 percent of the facilities currently employ this technology, EPA predicts significant removals attributable to this rule because the limitations reflect substantial improvements in how these technology components are designed and operated. Finally, EPA has evaluated the economic impacts associated with this technology and found it to be economically achievable.

New Source Performance Standards (NSPS)

The Agency also evaluated options BAT-1 and BAT-3 for new sources. For the final iron and steel regulation, EPA established NSPS for by-product cokemaking subcategory based on BAT-1. EPA ultimately rejected BAT-3 for the reasons set forth in Section VIII.A.3.a of the preamble to the final rule. EPA considers BAT-1 as the "best" demonstrated technology for new sources in the by-product segment of the subcategory. EPA concluded that the chosen technology does not present a barrier to entry because 75 percent of existing facilities currently employ the technology. The Agency considered energy requirements and other non-water quality environmental impacts and found no basis for any different standards than the selected NSPS. Therefore, EPA is promulgating NSPS for the by-products recovery cokemaking segment that are identical to BAT for toxic and non-conventional pollutants, while also promulgating TSS, oil and grease (measured as HEM), and pH limitations, using the same technology basis.

Pretreatment Standards for Existing Sources (PSES)

EPA considered four PSES options for indirect discharging by-product recovery cokemaking facilities. The four options rely on physical/chemical or biological treatment or a combination of both to reduce the discharge of pollutants from by-product recovery cokemaking facilities. For PSES, treatment is performed to ensure that pollutants discharged by the industry do not "pass through" POTWs to waters of the United States or interfere with POTW operations or sludge disposal practices. The four technology options are:

- Option 1 (PSES-1): Emission control scrubber blowdown to coke quench stations, oil and tar removal, flow equalization prior to ammonia stripping, free and fixed ammonia stripping, and post ammonia stripping equalization;
- Option 2 (PSES-2): PSES-1 treatment with cyanide precipitation, sludge dewatering, and multimedia filtration;
- Option 3 (PSES-3): Equivalent to BAT-1; and
- Option 4 (PSES-4): Equivalent to BAT-3.

As discussed in the 2000 proposal, EPA dropped PSES-2 and PSES-4 from consideration because PSES-2 is a proprietary technology which would make costs and economic achievability difficult to predict, and PSES-4 achieves pollutant removals equivalent to PSES-3 but was much more costly. Therefore, for the final rule, EPA considered only PSES-1 and PSES-3 as the basis for the by-product segment of the cokemaking subcategory pretreatment standards. Figures 9-3 and 9-4 show PSES-1 and PSES-3 considered for the eight indirect discharging by-product recovery cokemaking facilities. The following discussion explains each option in further detail.

PSES-1 is based on free and fixed ammonia distillation (stripping), or ammonia stills. See the discussion of ammonia stills under BAT above for additional information regarding the design, operation, and effectiveness of these units in removing the cokemaking pollutants of concern. As shown in Table 9-1, seven of the eight indirect discharging sites in this subcategory use free and fixed ammonia distillation systems. One site uses an air stripping unit rather than an ammonia still.

PSES-3 is the same as PSES-1 with the addition of biological treatment with nitrification for increased pollutant removal. PSES-3 is equivalent to BAT-1 for direct discharging facilities. See the previous BAT section for a discussion of this technology.

For the final iron and steel regulation, EPA established PSES limitations for by-product cokemaking subcategory based on PSES-1. EPA rejected PSES-3 because it determined that the option was not economically achievable for indirect dischargers in this segment. EPA

concluded that PSES-1 represents the most appropriate basis for pretreatment standards for the following reasons. First, PSES-1, in combination with treatment occurring at the receiving POTWs, will substantially reduce the levels of all cokemaking pollutants of concern. Well-operated free and fixed ammonia stills will remove gross amounts of ammonia-N, cyanide, and some organic pollutants such as the volatile and semi-volatile organic compounds, while the activated sludge biological treatment at the POTWs will remove additional ammonia-N, cyanide, naphthalene, and the other organic constituents of the wastewater to low levels. Second, EPA has considered the compliance costs associated with this option and determined they are economically achievable.

EPA is also establishing a mechanism by which by-product cokemaking facilities discharging to POTWs with nitrification capability would not be subject to the pretreatment standard for ammonia-N. This is because EPA has determined that ammonia-N does not pass through such POTWs. See Section 12 for more information.

Pretreatment Standards for New Sources (PSNS)

The Agency also evaluated options PSES-1 and PSES-3 as the technology basis for indirect discharging new sources. For the final iron and steel regulation, EPA established PSNS limitations for by-product cokemaking subcategory based on PSES-3. This option achieves the greater removals of the two options considered for the final rule. EPA considered the cost of PSES-3 technology for new facilities in this segment. EPA concluded that such costs are not so great as to constitute a barrier to entry, as demonstrated by the fact that three of the eight currently operating indirect discharging facilities are using these technologies. The Agency considered energy requirements and other non-water quality environmental impacts and found no basis for any different standards than the selected PSNS.

EPA is also establishing a mechanism by which by-product cokemaking facilities discharging to POTWs with nitrification capability would not be subject to the pretreatment standard for ammonia-N. This is because EPA has determined that ammonia-N does not pass through such POTWs. See Section 12 for more information.

9.1.2 Non-Recovery Cokemaking

All non-recovery cokemaking sites reported zero discharge of process wastewater in industry survey responses. Because non-recovery cokemaking operations do not discharge any process wastewater, the Agency concludes that non-recovery cokemaking operation itself represents the best practicable technology currently available and that no discharge of process wastewater pollutants is a reasonable BPT limitation. For the same reason, the Agency concludes that there are no costs associated with achieving this limitation, and expects that no additional pollutant removals attributable to this segment will occur. Accordingly, EPA considered zero discharge as the only technology option for non-recovery cokemaking facilities for BPT, BCT, BAT, NSPS, PSES, and PSNS. EPA identified no technologies that can achieve greater removals of toxic, conventional, and nonconventional pollutants than those that are the basis for BPT (i.e., zero discharge).

9.2 Ironmaking and Sintering

In the final rule, EPA is not changing the subcategory structure for the ironmaking and sintering subcategories. However, as explained in Section 1, EPA performed all the analyses on the proposed subcategory structure. Therefore, this section discusses the technology options considered for the proposed ironmaking subcategory, which includes the sintering and blast furnace segments.

Best Practicable Control Technology Currently Available (BPT)

EPA did not consider any revision to the existing BPT limitations for the ironmaking subcategory. For the sintering subcategory, EPA is creating two new segments. The segment, sintering operations with wet air pollution control, is a recodification of what was formerly subcategory-wide limitations. The second segment, sintering operations with dry air pollution control, is new. EPA is establishing BPT limitations for the sintering operations with dry air pollution control segment of the sintering subcategory. These limitations are: no discharge of process wastewater pollutants. See Section 7.1.2 for more information about what constitutes process wastewater for this segment. Because sintering operations with dry air pollution control do not generate any process wastewater, the Agency concludes that sintering operation with dry air pollution control itself represents the best practicable technology currently available and that no discharge of process wastewater pollutants is a reasonable BPT limitation. For the same reason, the Agency concludes that there are no costs associated with achieving this limitation, and expects that no additional pollutant removals attributable to this segment will occur. Accordingly, EPA considered zero discharge as the only technology option for the sintering operations with dry air pollution control segment of the sintering subcategory for BPT, BCT, BAT, NSPS, PSES, and PSNS. EPA identified no technologies that can achieve greater removals of toxic, conventional, and nonconventional pollutants than those that are the basis for BPT (i.e., zero discharge).

Best Conventional Pollutant Control Technology (BCT)

EPA is not revising any existing BCT limitations for ironmaking because there are no technologies that achieve greater removals of conventional pollutants than the technology basis for the current BPT and that pass the BCT cost test.

Best Available Technology Economically Achievable (BAT)

Wastewater from blast furnace ironmaking and sintering operations contain similar pollutants of concern. Sites with both operations typically cotreat wastewater. Therefore, with the exception of cooling towers, which apply to blast furnace operations only, EPA considered the same technology options for both ironmaking and sintering operations for the final rule. The option, BAT-1, relies on improved high-rate recycle and physical/chemical treatment to reduce the discharge of pollutants from blast furnace ironmaking and sintering operations. The technology basis for BAT-1 is solids removal with high-rate recycle and metals

precipitation, cooling tower, breakpoint chlorination, and multimedia filtration of blowdown wastewater. Figure 9-5 presents the BAT-1 technology option evaluated by the Agency.

High-rate recycle coupled with recycle treatment, consisting of solids removal via clarification and cooling, are key components of the BAT-1 option because they allow wastewater to be reused, thereby reducing wastewater discharge volumes and pollutant loadings. Common pollutants in blast furnace wastewater removed by the high-rate recycle system treatment components include total suspended solids (TSS), ammonia, cyanides, phenolic compounds, and metals. Wastewater from sintering operations also contains these pollutants, along with oil and grease (O&G) and dioxins and furans. As shown in Table 9-2, all 14 of the blast furnace ironmaking and sintering sites use high-rate recycle with clarification; 11 of 14 use cooling towers.

Metals in wastewater blowdown are further treated by metals precipitation. Metals precipitation removes metallic contaminants from the wastewater by converting soluble, heavy metals to insoluble salts, typically metal hydroxides. The precipitated solids are then removed by sedimentation and filtration. The metal hydroxides are formed through chemical addition of lime, caustic, magnesium hydroxide, or soda ash. As shown in Table 9-2, 9 of the 14 blast furnace ironmaking and sintering sites use blowdown metals precipitation.

Breakpoint chlorination uses sodium hypochlorite or chlorine gas in a carefully controlled pH environment to remove ammonia, although incidental removals of cyanide and phenols will occur. See the BAT-3 discussion for by-product recovery cokemaking in Section 9.1.1 for more information concerning breakpoint chlorination. As shown in Table 9-2, 2 of the 14 blast furnace ironmaking and sintering sites uses breakpoint chlorination.

Finally, multimedia (mixed media) filtration polishes treated effluent and removes dioxins and furans from sintering wastewater. A granular media contained in a bed remove suspended solids from the wastewater. When the pressure drop across the filter, caused by solids accumulation in the bed, is large enough to impede flow, the bed is cleaned by backwashing. Backwashing forces wash water through the bed in the reverse direction of original flow, removing accumulated solids. As shown in Table 9-2, 5 of the 14 blast furnace ironmaking and sintering sites use multimedia filtration.

During four sampling episodes, EPA found several of the dioxin and furan congeners in both the raw and treated wastewater from sinter plants operating wet air pollution control technologies. EPA concludes that multimedia filtration will remove all the dioxin/furan congeners to below the method detection limit. Dioxins and furans are hydrophobic compounds that tend to adhere to solids present in a solution. Multimedia filtration, which is designed to remove solids, will also remove the dioxins/furans adhering to solids as well. EPA has data from two sampling episodes at sinter plants demonstrating that filtration of wastewater samples containing dioxins and furans at treatable levels will reduce their concentrations to nondetectable levels. This is true even for raw wastewater that has undergone no other treatment. Currently none of the sintering sites use multimedia filtration to treat sintering wastewater prior to commingling with any non-sintering and non-blast furnace wastewaters.

Increased high-rate recycle is the major difference between the BAT-1 technology basis and the 1982 technology basis. Representatives from Ispat-Inland Steel commented during EPA/industry meetings subsequent to proposal that using pulverized coal injection (PCI) at Ispat-Inland's No. 7 furnace has led to severe corrosion in the Bischoff scrubber used for gas cleaning. Operators have had to increase the blowdown rate from 43 gpt in 1997 to approximately 70 gpt to control high chloride levels and minimize corrosion.

Based on this comment, EPA evaluated the reported injection rates for pulverized and granulated coal (PCI/GCI) in 1997. All but two sites with furnaces using PCI/GCI reported PNFs at or below 70 gpt in 1997. One of these sites operates a high-rate recycle system that is not optimized for minimal blowdown, and the second site does not have a high-rate recycle system. PNFs below 25 gpt were reported for furnaces at two sites using PCI/GCI.

To obtain additional information to further evaluate the potential impact of PCI/GCI on the achievability of the model PNF, EPA contacted representatives of Ispat-Inland Steel, Bethlehem Steel, and U.S. Steel to review current blast furnace operations and operating practices to minimize corrosion in blast furnace treatment and recycle systems. Contact reports are included in the Iron and Steel Administrative Record (Section 14.1, DCN IS10359). The focus of the review was furnaces using PCI, and the objective was to collect information for use in determining appropriate blowdown rates for blast furnace operations using PCI/GCI.

Site personnel provided detailed descriptions and supporting data demonstrating that corrosion has become a significant issue with using PCI to increase furnace productivity. Site contacts indicated that it is likely that PCI use as a coke substitute will increase the concentrations of chlorides and the potential for corrosion. Furnace operators report that chloride concentrations in the range of 1,500 to 2,000 mg/L are tolerable with increased treatment of the recirculating water with corrosion inhibitors. This range can be maintained with the model PNF of 70 gpt developed for the 1982 rule.

Based on this evaluation, EPA has determined BAT-1 is not the best available technology for existing blast furnace ironmaking operations. EPA is therefore leaving unchanged all BAT limitations currently in effect for the sintering and ironmaking subcategories. However, as proposed, EPA is promulgating a new limitation for 2,3,7,8-tetrachlorodibenzofuran (TCDF) for sintering operations with wet air pollution control systems in the sintering subcategory. The technology basis for the 2,3,7,8-TCDF limitation is multimedia filtration (in addition to the technology basis adopted in the 1982 rule), which was proposed as part of BAT-1.

Survey responses indicate that it is common practice for facilities to combine their sintering wastewater with other iron and steel wastewaters prior to discharge to the receiving water body. This practice dilutes dioxin and furan concentrations to levels below the analytical method detection limit. Because EPA wants to ensure that dioxin and furan congeners are removed from the wastewater and not simply diluted (to ensure that the limitations reflect the actual reductions that can be achieved using the BAT technology), EPA is applying the technology option at a point after commingling with any sintering or blast furnace operation wastewater, but prior to mixing with process wastewaters from processes other than sintering and

ironmaking, non-process wastewaters or non-contact cooling water, if such water(s) are in an amount greater than 5 percent by volume of the sintering process wastewaters.

New Source Performance Standards (NSPS)

The Agency also evaluated option BAT-1 for new sources. For the same reasons discussed under BAT, EPA is leaving unchanged NSPS currently in effect for the ironmaking subcategory. EPA is promulgating a new limitation for 2,3,7,8-TCDF for sintering operations with wet air pollution control systems. The technology basis for the 2,3,7,8-TCDF limitation is multimedia filtration (in addition to the technology basis adopted in the 1982 rule). All other new source limitations for sintering operations with wet air pollution control remain unchanged.

Pretreatment Standards for Existing Sources (PSES)

The Agency evaluated only one option, PSES-1, for indirect discharging sites. The PSES-1 option is equivalent to BAT-1, but without breakpoint chlorination and multimedia filtration. Figure 9-6 presents the PSES technology option evaluated by the Agency. For the same reasons discussed under BAT, EPA is leaving unchanged existing pretreatment standards for the ironmaking subcategory, although EPA is establishing a mechanism by which ironmaking facilities discharging to POTWs with nitrification capability would not be subject to the pretreatment standard for ammonia-N. This is because EPA has determined that ammonia-N does not pass through such POTWs.

However, EPA is promulgating a new limitation for 2,3,7,8-TCDF for sintering operations with wet air pollution control systems. The technology basis for the 2,3,7,8-TCDF limitation is multimedia filtration (in addition to the technology basis adopted in the 1982 rule), which was proposed as part of BAT-1. All other existing standards remain unchanged. EPA is also establishing a mechanism by which sintering facilities discharging to POTWs with nitrification capability would not be subject to the pretreatment standard for ammonia-N. This is because EPA has determined that ammonia-N does not pass through such POTWs. However, to EPA's knowledge, there are no existing indirect dischargers of sintering wastewater.

Pretreatment Standards for New Sources (PSNS)

The Agency also evaluated option PSES-1 for new sources. For the same reasons discussed under BAT, EPA is leaving unchanged all PSNS for ironmaking subcategories, except to establishing a mechanism by which ironmaking facilities discharging to POTWs with nitrification capability would not be subject to the pretreatment standard for ammonia-N. This is because EPA has determined that ammonia-N does not pass through such POTWs.

However, as proposed, EPA is promulgating a new limitation for 2,3,7,8-TCDF for sintering operations with wet air pollution control systems. The technology basis for the 2,3,7,8-TCDF limitation is multimedia filtration (in addition to the technology basis adopted in the 1982 rule), which was proposed as part of BAT-1. All other existing standards remain unchanged. EPA is also establishing a mechanism by which sintering facilities discharging to

POTWs with nitrification capability would not be subject to the pretreatment standard for ammonia-N. This is because EPA has determined that ammonia-N does not pass through such POTWs. However, to EPA's knowledge, there are no existing indirect dischargers of sintering wastewater.

9.3 Integrated Steelmaking

Best Practicable Control Technology Currently Available (BPT)

EPA did not consider any revision to the existing BPT limitations for the operations included in the proposed integrated steelmaking subcategory.

Best Conventional Pollutant Control Technology (BCT)

EPA did not consider revising any existing BCT limitations for the operations included in the proposed integrated steelmaking subcategory because there are no technologies that achieve greater removals of conventional pollutants than the technology basis for the current BPT and that pass the BCT cost test.

Best Available Technology Economically Achievable (BAT)

EPA considered one technology option evaluated for this subcategory for treatment of wastewater associated with basic oxygen furnace (BOF) steelmaking, vacuum degassing, and continuous casting operations at direct discharging integrated steelmaking facilities, whether treated individually or cotreated. Industry survey responses indicate that cotreatment is a common practice, but depends largely on the proximity of manufacturing processes. The option relies on both in-process high-rate recycle systems and physical/chemical treatment commonly used in the industry to reduce the discharge of pollutants of concern from BOF, vacuum degassing, and continuous casting operations. The BAT-1 technology option is:

- BAT-1
  - BOF systems: high-rate recycle using a high-volume classifier for primary solids removal, followed by a high-efficiency clarifier for solids removal with sludge dewatering, carbon dioxide injection prior to clarification in wet-open combustion and wet-suppressed combustion BOF recycle systems to remove scale forming ions, and a cooling tower; blowdown treatment by metals precipitation,
  - Vacuum degassing systems: high-rate recycle using a high-efficiency clarifier for solids removal with sludge dewatering, and a cooling tower; blowdown treatment by metals precipitation, and
  - Continuous casting systems: high-rate recycle using a scale pit with oil removal to recover mill scale and remove O&G, a roughing

clarifier for coarse solids removal with sludge dewatering, multimedia filtration for polishing, and a cooling tower; blowdown treatment by metals precipitation.

Blowdown from each of these high-rate recycle systems can be treated in separate metals precipitation systems or cotreated. Figure 9-7 presents the BAT-1 option evaluated by the Agency.

BAT-1 is based on high-rate recycle and associated treatment for solids removal, watering softening, and water cooling prior to reuse; metals in high-rate recycle blowdown are removed by metals precipitation and filtration. High-rate recycle coupled with recycle treatment, consisting of solids removal (via scale pits and clarification) and cooling, are key components of the technology option because they allow wastewater to be reused, thereby reducing wastewater discharge volumes and pollutant loadings. Common pollutants in BOF, vacuum degassing, and continuous casting wastewater removed by the high-rate recycle system treatment components include total suspended solids (TSS), oil and grease (O&G), and metals. As shown in Table 9-3, 20 of the 21 integrated steelmaking facilities use high-rate recycle systems with treatment.

Scale accumulation in wet-open and wet-suppressed BOF recycle systems dictate blowdown rates. Carbon dioxide injection removes scale-forming ions (hardness) from the recycle water, which allows higher recycle rates and less blowdown. Wet-open and wet-suppressed recycle systems also use carbon dioxide injection to control pH. As shown in Table 9-3, 5 of the 21 integrated steelmaking facilities use carbon dioxide injection in BOF high-rate recycle systems.

Metals in wastewater blowdown are further treated by metals precipitation. Metals precipitation removes metallic contaminants from the wastewater by converting soluble, heavy metals to insoluble salts, typically metal hydroxides. The precipitated solids are then removed by sedimentation. The metal hydroxides are formed through chemical addition of lime, caustic, magnesium hydroxide, or soda ash. As shown in Table 9-3, 7 of the 21 integrated steelmaking sites use blowdown metals precipitation.

Finally, multimedia (mixed media) filtration polishes treated effluent. A granular media contained in a bed remove suspended solids from the wastewater. When the pressure drop across the filter, caused by solids accumulation in the bed, is large enough to impede flow, the bed is cleaned by backwashing. Backwashing forces wash water through the bed in the reverse direction of original flow, removing accumulated solids. As shown in Table 9-3, 18 of the 21 integrated steelmaking sites use multimedia filtration.

All sites with ladle metallurgy operations reported zero discharge of process wastewater in industry survey responses. Accordingly, EPA considered zero discharge as the only technology option for ladle metallurgy operations.

EPA is not promulgating effluent limitations and standards because it determined the option was not economically achievable. The proposed option when considered together

with options for other subcategories resulted in a significant economic impact that EPA determined is unreasonable. Therefore, EPA is leaving unchanged all BAT limitations currently in effect for operations included in the proposed integrated steelmaking subcategory, with one exception.

EPA is promulgating revised BPT, BAT, BCT, and PSES limitations and standards for one segment of the steelmaking subcategory - basic oxygen furnaces with semi-wet air pollution control. This is consistent with what was appeared in the proposal (65 FR 81980) and the February 14, 2001 Notice (66 FR 10253-54), although rather than establishing a specific limitation, EPA has allowed the permit authority or pretreatment control authority to determine limitations based on best professional judgment, when safety considerations warrant. The Agency believes best professional judgment will allow the permit authority or pretreatment control authority to reflect the site-specific nature of the discharge. EPA is doing this because, although the 1982 regulation requires basic oxygen furnace semi-wet air pollution control to achieve zero discharge of process wastewater pollutants, currently not all of the sites are able to achieve this discharge status because of safety and operational considerations. The Agency recognizes the benefit of using excess water in basic oxygen furnaces with semi-wet air pollution control systems in cases where safety considerations are present. The Agency justifies the increased allowance in this case because of the employee safety and manufacturing considerations (reduced production equipment damage and lost production). EPA estimates that the industry will incur no costs due to this change. EPA could identify no potential adverse environmental impacts associated with the potential discharge.

New Source Performance Standards (NSPS)

The Agency also evaluated option BAT-1 for BOF steelmaking, vacuum degassing, and continuous casting operations, and zero discharge for ladle metallurgy operations, in the integrated steelmaking subcategory. EPA is not promulgating effluent limitations and standards based on this technology because, when considered together with options for other subcategories, EPA determined that it would result in an unacceptable economic impact. Except as noted below, EPA is leaving unchanged all NSPS currently in effect for operations included in the proposed integrated steelmaking subcategory.

In the case of electric arc furnaces with semi-wet air pollution control, the Agency is promulgating NSPS, PSES, and PSNS limitations and standards of zero discharge of process wastewater pollutants. The 1982 regulation previously established BPT, BCT, and BAT limitations of zero discharge of process wastewater pollutants for electric arc furnaces with semi-wet air pollution control. EPA identified no discharges from electric arc furnaces with semi-wet air pollution control and received no comments regarding the establishment of zero discharge of process wastewater pollutants for this segment. EPA estimates that the industry will incur no costs due to this change since all known facilities are currently achieving compliance with zero discharge of process wastewater pollutants.

Pretreatment Standards for Existing Sources (PSES)

EPA considered one technology option for this subcategory for treatment of wastewater associated with BOF steelmaking, vacuum degassing, and continuous casting operations at indirect discharging integrated steelmaking facilities. This option, PSES-1, is equivalent to BAT-1 and relies on both in-process high-rate recycle systems and physical/chemical treatment commonly used in the industry to reduce the discharge of pollutants of concern from BOF, vacuum degassing, and continuous casting operations. Figure 9-7 presents the PSES technology option evaluated by the Agency.

In addition, all sites with ladle metallurgy operations reported zero discharge of process wastewater in industry survey responses. Accordingly, EPA considered zero discharge as the only technology option for ladle metallurgy operations.

EPA is not promulgating effluent limitations and standards based on this technology because it determined that it was not economically achievable. The proposed option when considered together with options for other subcategories resulted in a significant economic impact that EPA determined is unreasonable. Therefore, EPA is leaving unchanged all PSES limitations currently in effect for operations under the proposed integrated steelmaking subcategory, except for steelmaking subcategory-basic oxygen furnaces with semi-wet air pollution control, which is described above under BAT and electric arc furnaces with semi-wet air pollution control, which is described under NSPS.

Pretreatment Standards for New Sources (PSNS)

The Agency also evaluated option PSES-1 for BOF steelmaking, vacuum degassing, and continuous casting operations, and zero discharge for ladle metallurgy operations, in the integrated steelmaking subcategory. EPA is not promulgating effluent limitations and standards based on this technology because, when considered together with options for other subcategories, EPA determined that it would result in an unacceptable economic impact. Therefore, EPA is leaving unchanged all PSNS currently in effect for operations included in the proposed integrated steelmaking subcategory, except for electric arc furnaces with semi-wet air pollution control, which is described under NSPS.

9.4 Integrated and Stand-Alone Hot Forming

Best Practicable Control Technology Currently Available (BPT)

EPA did not consider revising any existing BPT limitations for operations included in the proposed integrated and stand-alone hot forming subcategory.

Best Conventional Pollutant Control Technology (BCT)

EPA is not revising any existing BCT limitations for operations included in the proposed integrated and stand-alone hot forming subcategory because it did not identify any

technologies that achieve greater removals of conventional pollutants than the technology basis for the current BPT and that pass the BCT cost test.

Best Available Technology Economically Achievable (BAT)

EPA evaluated equivalent technology options for each segment of this subcategory: carbon and alloy steel and stainless steel. The option relies on both in-process high-rate recycle systems and physical/chemical treatment commonly used in the industry to reduce the discharge of pollutants of concern from hot forming operations. The BAT-1 technology includes high-rate recycle using a scale pit with oil skimming, a roughing clarifier with oil skimming, sludge dewatering, a multimedia filter for polishing, and a cooling tower to lower the water temperature to acceptable levels to reuse and treatment of blowdown with multimedia filtration. For both segments, high-rate recycle and treatment of wastewater from contact water systems used for scale removal, roll cooling, product cooling, flume flushing, and other miscellaneous sources (e.g., roll shops, basement sumps) is common. Figure 9-8 presents the BAT technology option evaluated by the Agency.

BAT-1 is based on high-rate recycle and associated treatment for solids removal, and water cooling prior to reuse. High-rate recycle coupled with recycle treatment, consisting of solids removal (via scale pits, clarification, and filtration) and cooling, are key components of the technology option because they allow wastewater to be reused, thereby reducing wastewater discharge volumes and pollutant loadings. Common pollutants in hot forming wastewater removed by the high-rate recycle system treatment components include total suspended solids (TSS) and oil and grease (O&G). As shown in Table 9-4, 25 of the 32 direct discharging facilities in this subcategory use high-rate recycle systems with treatment.

Multimedia (mixed media) filtration removes solids not removed by scale pits and clarification. A granular media contained in a bed removes suspended solids from the wastewater. When the pressure drop across the filter, caused by solids accumulation in the bed, is large enough to impede flow, the bed is cleaned by backwashing. Backwashing forces wash water through the bed in the reverse direction of original fluid flow, removing accumulated solids. As shown in Table 9-4, 9 of the 32 direct discharging facilities in this subcategory use multimedia filtration.

EPA is not adopting limits and standards based on this technology because it determined that it was not economically achievable. EPA has determined that the impact is unacceptable in view of the precarious financial situation of the proposed subcategory as a whole. Moreover, many facilities are already at or below discharge levels of the proposed effluent limitations guidelines and standards, and EPA has no reason to believe that facilities will reverse this trend and increase pollutant discharges above the 1997 levels in EPA's record database.

New Source Performance Standards (NSPS)

The Agency also evaluated option BAT-1 for new sources. However, EPA is not promulgating NSPS based on this technology option, because EPA has determined that the economic impact of this option is unacceptable in view of the precarious financial strength of the affected facilities. Therefore, EPA is leaving unchanged all NSPS currently in effect for operations included in the proposed integrated and stand-alone hot forming subcategory.

Pretreatment Standards for Existing Sources (PSES)

EPA proposed not to revise the current PSES for each segment. At proposal, EPA considered identical technology options for each segment of this subcategory: carbon and alloy steel and stainless steel. The option, PSES-1, is equivalent to BAT-1 and relies on both in-process high-rate recycle systems and physical/chemical treatment commonly used in the industry to reduce the discharge of pollutants of concern from hot forming operations. Figure 9-8 presents the PSES technology option evaluated by the Agency. Table 9-4 shows that three of the five indirect discharging facilities in this subcategory use high-rate recycle systems with treatment.

Consistent with its position at proposal, EPA is not revising PSES limitations for the integrated and stand-alone hot forming subcategory based on this technology option. EPA's reasons are set forth in the preamble to the proposed rule. Therefore, EPA is leaving unchanged all PSES limitations currently in effect for operations that would have been covered in the proposed integrated and stand-alone hot forming subcategory.

Pretreatment Standards for New Sources (PSNS)

The Agency also evaluated option PSES-1 for new sources. However, EPA is not promulgating PSNS based on this technology option for the reasons described above for PSES. Therefore, EPA is leaving unchanged all PSNS currently in effect for operations included in the proposed integrated and stand-alone hot forming subcategory.

9.5 Non-Integrated Steelmaking and Hot Forming

Best Practicable Control Technology Currently Available (BPT)

EPA did not consider any revision to the existing BPT limitations for the non-integrated steelmaking and hot forming subcategory.

Best Conventional Pollutant Control Technology (BCT)

EPA is not revising any existing BCT limitations for operations included in the proposed non-integrated steelmaking and hot forming subcategory because there are no technologies that achieve greater removals of conventional pollutants than the technology basis for the current BPT and that pass the BCT cost test.

Best Available Technology Economically Achievable (BAT)

EPA evaluated one technology option for treatment of wastewater associated with vacuum degassing, continuous casting, and hot forming operations at non-integrated steelmaking and hot forming facilities, whether treated individually or cotreated. Industry survey responses indicate that cotreatment is a common practice at non-integrated mills. The BAT-1 technology option relies on both in-process high-rate recycle systems and physical/chemical treatment to reduce the discharge of pollutants of concern from vacuum degassing, continuous casting, and hot forming operations, and applies to both industry segments: carbon and alloy steel and stainless steel. The BAT-1 technology option is:

- BAT-1
  - Continuous casting systems: high-rate recycle using a scale pit with oil removal to recover mill scale and remove O&G, a roughing clarifier for coarse solids removal with sludge dewatering, multimedia filtration for polishing, and a cooling tower,
  - Vacuum degassing systems: wastewater cotreated in the continuous casting system, roughing clarifier with sludge dewatering, and a cooling tower,
  - Hot forming systems: high-rate recycle using a scale pit with oil removal to recover mill scale and remove O&G, a roughing clarifier for coarse solids removal with sludge dewatering, multimedia filtration for polishing, and a cooling tower, and
  - Combined thin slab casting/hot forming systems: high-rate recycle using a scale pit with oil removal to recover mill scale and remove O&G, a roughing clarifier for coarse solids removal with sludge dewatering, multimedia filtration for polishing, and a cooling tower.

For both segments, high-rate recycle and treatment of wastewater from vacuum degassing, continuous casting, and hot forming operations at non-integrated facilities are common. Figure 9-9 shows the BAT option evaluated by the Agency for non-integrated steelmaking and hot forming sites. This figure applies for both segments.

The Agency realizes that many sites may be configured such that the combined treatment of operations may not be possible. In such cases, separate treatment equipment for manufacturing processes, as required, equivalent to the combined treatment system would achieve model treatment system effluent quality. EPA considered these variables when costing sites for treatment systems, as discussed in Section 10.

BAT-1 is based on high-rate recycle and associated treatment for solids removal and water cooling prior to reuse. High-rate recycle coupled with recycle treatment, consisting of solids removal (via scale pits, clarification, and filtration) and cooling, are key components of the technology option because they allow wastewater to be reused, thereby reducing wastewater discharge volumes and pollutant loadings. Common pollutants in vacuum degassing, continuous casting, and hot forming wastewater removed by the high-rate recycle system treatment components include TSS and O&G. As shown in Table 9-5, 30 of the 35 direct discharging facilities in this subcategory use high-rate recycle systems with treatment.

Multimedia (mixed media) filtration removes solids not removed by scale pits and clarification. A granular media contained in a bed removes suspended solids from the wastewater. When the pressure drop across the filter, caused by solids accumulation in the bed, is large enough to impede flow, the bed is cleaned by backwashing. Backwashing forces wash water through the bed in the reverse direction of original fluid flow, removing accumulated solids. As shown in Table 9-5, 25 of the 35 direct discharging facilities in this subcategory use multimedia filtration.

All sites with electric arc furnaces (EAFs) and ladle metallurgy stations reported zero discharge of process wastewater in industry survey responses. Accordingly, EPA used zero discharge as the only technology option for EAF and ladle metallurgy operations.

However, EPA is not promulgating BAT limitations for non-integrated steelmaking and hot forming subcategory based on these technology options. Judging from the installation costs and the pollutant reductions associated with these treatment technologies, EPA concluded that the technology simply was not the best available to achieve pollutant removals (EPA estimated that the technology could remove approximately 230 pound-equivalents (lb-eq) per year at an estimated cost of $2,069 per lb-eq for direct discharging stainless segment, and 3,891 pound-equivalents per year at an estimated cost of $941 per lb-eq in the direct discharging carbon and alloy segment). Therefore, EPA is leaving unchanged all BAT limitations currently in effect for operations included in the proposed non-integrated steelmaking and hot forming subcategory.

New Source Performance Standards (NSPS)

EPA evaluated BAT-1 for vacuum degassing, continuous casting, and hot forming operations, and zero discharge for EAFs and ladle metallurgy, for new sources. The Agency also evaluated a second technology option based on zero discharge for all non-integrated steelmaking and hot forming operations. EPA selected the zero discharge option as the basis of the proposed NSPS for this subcategory.

Based on additional information provided in comments received on the proposed rule, EPA determined that it is not always possible, or even desirable, for non-integrated steelmaking and hot forming sites to operate their manufacturing processes to achieve zero discharge. The Agency has identified technical barriers to achieving zero discharge via

evaporative uses such as electrode spray cooling and slag quenching, particularly for hot forming wastewater.

EPA is leaving unchanged all NSPS currently in effect for operations included in the proposed non-integrated steelmaking and hot forming subcategory, with the exception of electric arc furnaces with semi-wet air pollution control. For those operations, the Agency is promulgating NSPS standards of zero discharge of process wastewater pollutants. EPA identified no discharges from electric arc furnaces with semi-wet air pollution control and received no comments regarding the establishment of zero discharge of process wastewater pollutants for this segment. EPA estimates that the industry will incur no costs due to this change since all known facilities are currently achieving compliance with zero discharge of process wastewater pollutants.

Pretreatment Standards for Existing Sources (PSES)

EPA considered one technology option for this subcategory for treatment of wastewater associated with vacuum degassing, continuous casting, and hot forming operations at indirect discharging non-integrated steelmaking and hot forming facilities. This option, PSES-1, is equivalent to BAT-1 and relies on both in-process high-rate recycle systems and physical/chemical treatment to reduce the discharge of pollutants of concern from vacuum degassing, continuous casting, and hot forming operations. Figure 9-9 presents the PSES technology option evaluated by the Agency. Table 9-5 shows that 10 of the 11 indirect discharging facilities in this subcategory use high-rate recycle systems with treatment; 3 of the 6 use multimedia filtration for polishing. Two sites also discharge both directly and indirectly; both use high-rate recycle systems with treatment and multimedia filtration.

In addition, all sites with EAFs and ladle metallurgy stations reported zero discharge of process wastewater in industry survey responses. Accordingly, EPA used zero discharge as the only technology option for EAF and ladle metallurgy operations.

EPA did not propose and is not promulgating PSES limitations for the non-integrated steelmaking and hot forming subcategory–carbon and alloy segment. EPA is not promulgating PSES for the non-integrated steelmaking and hot forming subcategory–stainless segment based on these technology options. Judging from the installation costs and the pollutant reductions associated with the treatment technologies, EPA concluded that the technology simply was not the best available to achieve pollutant removals (EPA estimated that the technology could remove approximately 78 pound-equivalents per year at an estimated cost of $1,970 per lb-eq for the indirect discharging stainless segment). Therefore, EPA is leaving unchanged all PSES currently in effect for operations included in the proposed non-integrated steelmaking and hot forming subcategory, except as described below.

In the case of electric arc furnaces with semi-wet air pollution control, the Agency is promulgating PSES and PSNS of zero discharge of process wastewater pollutants. The 1982 regulation previously established BPT, BCT, and BAT limitations of zero discharge of process wastewater pollutants for electric arc furnaces with semi-wet air pollution control. (EPA is

modifying the BPT, BAT, and BCT portions of this segment only to eliminate references in the title to basic oxygen furnace steelmaking-semi-wet.) EPA identified no discharges from electric arc furnaces with semi-wet air pollution control and received no comments regarding the establishment of zero discharge of process wastewater pollutants for this segment. EPA estimates that the industry will incur no costs due to this change since all known facilities are currently achieving compliance with zero discharge of process wastewater pollutants.

Pretreatment Standards for New Sources (PSNS)

EPA evaluated PSES-1 for vacuum degassing, continuous casting, and hot forming operations, and zero discharge for EAFs and ladle metallurgy, for new sources. The Agency also evaluated a second technology option based on zero discharge for all non-integrated steelmaking and hot forming operations. EPA selected the zero discharge option as the basis of the proposed PSNS for this subcategory.

Based on additional information provided in comments received on the proposed rule, EPA determined that it is not always possible, or even desirable, for non-integrated steelmaking and hot forming sites to operate their manufacturing processes to achieve zero discharge. The Agency has identified technical barriers to achieving zero discharge via evaporative uses such as electrode spray cooling and slag quenching, particularly for hot forming wastewater.

EPA is leaving unchanged all PSNS currently in effect for operations included in the proposed non-integrated steelmaking and hot forming subcategory, except in the case of electric arc furnaces with semi-wet air pollution control, which is described above under PSES.

9.6 Steel Finishing

Best Practicable Control Technology Currently Available (BPT)

EPA did not consider any revision to the existing BPT limitations for operations included in the proposed steel finishing subcategory.

Best Conventional Pollutant Control Technology (BCT)

EPA is not revising any existing BCT limitations for the operations included in the proposed steel finishing subcategory because there are no technologies that achieve greater removals of conventional pollutants than the technology basis for the current BPT and that pass the BCT cost test.

Best Available Technology Economically Achievable (BAT)

EPA evaluated separate technology options for this subcategory for the two segments: carbon and alloy steel and stainless steel. The carbon and alloy steel segment technology options control pollutant discharges for wastewater from acid pickling (typically with

hydrochloric or sulfuric acids) and associated annealing, cold forming, alkaline cleaning, hot coating, and electroplating operations. The stainless steel segment technology options control pollutant discharges for wastewater from salt bath and electrolytic sodium sulfate (ESS) descaling, acid pickling (typically with sulfuric, nitric, and nitric/hydrofluoric acids), annealing operations, cold forming, and alkaline cleaning.

For both segments, EPA's technology options include both in-process technologies and end-of-pipe wastewater treatment. BAT-1 in-process technologies include countercurrent rinsing, recycle of fume scrubber water, and reuse of acid (acid regeneration, purification, recycle, or recovery) for flow reduction. Flow reduction via countercurrent rinsing and recycle of fume scrubber are key in-process components of the technology option because they minimize water use, thereby reducing wastewater discharge volumes and pollutant loadings. BAT-1 end-of-pipe treatment includes oil removal for segregated oily wastes, flow equalization, hexavalent chromium reduction of hexavalent-chromium-bearing streams, metals precipitation for all waste streams, gravity clarification, and sludge dewatering. As shown in Table 9-6, 14 of the 56 direct discharging facilities in this subcategory use countercurrent rinsing; 33 recycle fume scrubber water; and 55 use metals precipitation. Figures 9-10 and 9-11 show the BAT technology options for the carbon and alloy steel and stainless steel segments, respectively; the technology options for both segments are identical.

The stainless steel segment includes both countercurrent rinsing and recycle of fume scrubber water for flow reduction, with an additional technology, acid purification. Acid purification uses an anion exchange resin to remove acid from metal ions in spent pickle liquor. The acid is desorbed with water and recycled to the process bath. This reduces wastewater discharge volumes and pollutant loadings. As shown in Table 9-6, 7 of the 56 direct discharging facilities in this subcategory use acid purification.

Common pollutants in steel finishing wastewater include TSS, O&G, and metals. Oil removal, hexavalent chromium reduction (when present), and metals precipitation are key end-of-pipe treatment components of the technology option because they remove these pollutants. Oily waste streams should be segregated and pretreated prior to commingling with other steel finishing wastewater. Many steel facilities use oil/water separators (for nonemulsified oils) or chemical emulsion breaking (for emulsified oils) to remove oil. As shown in Table 9-6, 26 of the 56 direct discharging steel finishing facilities use oil removal.

Hexavalent chromium-bearing wastewater streams should also be segregated and pretreated. Hexavalent chromium reduction is a chemical process (using sulfur dioxide, sodium bisulfite, sodium metabisulfite, or ferrous sulfate) where the chromium is reduced to the trivalent form. Once in this form, chromium can be effectively removed by metals precipitation. As shown in Table 9-6, 23 of the 56 direct discharging steel finishing facilities use hexavalent chromium reduction.

Metals in wastewater are treated by metals precipitation. Metals precipitation removes metallic contaminants from the wastewater by converting soluble, heavy metals to insoluble salts, typically metal hydroxides. The precipitated solids are then removed by

sedimentation. The metal hydroxides are formed through chemical addition of lime, caustic, magnesium hydroxide, or soda ash. As shown in Table 9-6, 55 of the 56 direct discharging steel finishing facilities use metals precipitation.

Subsequent to the proposed rule, EPA comprehensively reviewed the analyses performed to determine the model flow rates and long-term average pollutant concentrations (LTAs). Sections 13 and 14 describe EPA's revised analyses, with additional documentation provided in the final rulemaking record. As part of this reanalysis for the steel finishing subcategory, and in response to comments on the proposed regulation, EPA conducted additional site visits to three steel finishing facilities for three purposes:

- To assess how rinse water flow rates for steel finishing operations were selected by the sites and how these relate to product quality considerations;
- To determine typical flow control equipment and necessary monitoring practices to operate finishing lines efficiently and obtain relevant cost data; and
- To identify modifications to the finishing lines required to achieve the effluent limitations considered by EPA for the final rule.

EPA's subsequent analyses for steel finishing concluded that the model flow rates were not technically achievable for all facilities.

Therefore, EPA is not promulgating BAT limitations based on these technology options because the flow reductions that were an integral part of the technology interfered with product quality, thus indicating that the technology was not the best available for steel finishing operations. Moreover, after considering comments objecting to EPA's methodology at proposal of estimating costs, EPA performed a new cost analysis. Judging from the retrofit costs and the costs associated with necessary production shutdown during installation of new treatment technologies, EPA concluded that the technology simply was not the best available to achieve pollutant removals.

EPA did not promulgate limitations for the stainless finishing subcategory for the same reasons listed for the carbon and alloy finishing segment, with one additional reason. Commenters with experience operating acid purification units stated that they experienced neither the level of pollutant removal nor the cost savings EPA had envisioned in the analysis supporting the proposal. The recognition of this fact had an adverse impact both on the effluent reduction benefit and the projected cost of this technology option. Therefore, EPA is leaving unchanged all BAT limitations currently in effect for operations included in the proposed steel finishing subcategory.

New Source Performance Standards (NSPS)

The Agency also evaluated option BAT-1 for new sources for both industry segments. However, EPA is not promulgating NSPS based on these technology options for the same reasons discussed under BAT. Therefore, EPA is leaving unchanged all NSPS limitations currently in effect for operations included in the proposed steel finishing subcategory.

Pretreatment Standards for Existing Sources (PSES)

EPA evaluated technology options separately for this subcategory for the two segments: carbon and alloy steel and stainless steel. For both segments, EPA's technology options include both in-process technologies and end-of-pipe wastewater treatment. For each segment, PSES-1 is identical to BAT-1 for the segment. Figures 9-10 and 9-11 show the PSES technology options for the carbon and alloy steel and stainless steel segments, respectively. As presented in the figures, the technology options for both segments are identical.

The PSES-1 in-process technologies include countercurrent rinsing, recycle of fume scrubber water, and reuse of acid (acid regeneration, purification, recycle, or recovery) for flow reduction. As shown in Table 9-6, 10 of the 32 indirect discharging steel finishing facilities use countercurrent rinsing; 14 recycle fume scrubber water; and 5 use acid purification. PSES-1 end-of-pipe treatment includes oil removal for segregated oily wastes, flow equalization, hexavalent chromium reduction of hexavalent-chromium-bearing streams, metals precipitation for all waste streams, gravity clarification, and sludge dewatering. As shown in Table 9-6, 9 of the 32 indirect discharging steel finishing facilities use oil removal; 5 use hexavalent chromium reduction; and 20 use metals precipitation.

However, EPA is not promulgating PSES based on these technology options for the same reasons discusses under BAT. Therefore, EPA is leaving unchanged all PSES limitations currently in effect for operations included in the proposed steel finishing subcategory.

Pretreatment Standards for New Sources (PSNS)

The Agency also evaluated option PSES-1 for new sources for both industry segments. However, EPA is not promulgating PSNS based on these technology options for the same reasons discussed under BAT. Therefore, EPA is leaving unchanged all PSNS limitations currently in effect for operations included in the proposed steel finishing subcategory.

9.7 Other Operations

The other operations subcategory is comprised of three segments: briquetting, direct-reduced ironmaking (DRI), and forging. EPA evaluated BPT options for these operations because the Agency is considering limits for the first time for these segments.

9.7.1 Briquetting

Best Practicable Control Technology Currently Available (BPT)

The four existing briquetting sites in the United States reported zero discharge of process wastewater in industry survey responses. Accordingly, EPA used zero discharge based on dry air pollution controls as the only technology option considered for briquetting operations for BPT, BCT, BAT, NSPS, PSES, and PSNS. EPA identified no technologies that can achieve greater removals of toxic, conventional, and nonconventional pollutants than those that are the basis for BPT (i.e., zero discharge). EPA established these limitations because briquetting operations do not generate any process wastewater. For this reason, the Agency concludes that there are no costs associated with these limitations and standards. Furthermore, EPA projects no additional pollutant removals attributable to this segment.

9.7.2 Direct-Reduced Ironmaking (DRI)

Best Practicable Control Technology Currently Available (BPT)

The BPT technology option includes high-rate recycle with solids removal using a classifier and clarifier, cooling, sludge dewatering, and treatment of blowdown with multimedia filtration. Figure 9-12 shows the BPT technology option for DRI.

High-rate recycle coupled with recycle treatment (consisting of solids removal using a classifier and clarifier) and cooling, are key components of the technology option because they allow wastewater to be reused, thereby reducing wastewater discharge volumes and pollutant loadings. Common pollutants in DRI wastewater removed by the high-rate recycle system treatment components include TSS and metals.

Suspended solids in wastewater blowdown are removed by multimedia (mixed media) filtration prior to discharge. A granular media contained in a bed removes suspended solids from the wastewater. When the pressure drop across the filter, caused by solids accumulation in the bed, is large enough to impede flow, the bed is cleaned by backwashing. Backwashing forces wash water through the bed in the reverse direction of original fluid flow, removing accumulated solids. The DRI site operating in 1997 reported using high-rate recycle technology for wastewater generated from DRI WAPC, and using multimedia filtration for blowdown treatment, as shown in Table 9-7.

The Agency has determined that this treatment system represents the best practicable technology currently available and should be the basis for the BPT limitation for the following reasons. First, this technology option is one that is readily applicable to all facilities in this segment. Second, the adoption of this level of control would represent a significant reduction in pollutants discharged into the environment by facilities in this subcategory (EPA is not able to disclose the estimated amount of pollutant reduction because data aggregation and other masking techniques are insufficient to protect information claimed as confidential business information.) Third, the Agency assessed the total cost of water pollution controls likely to be

incurred for this option in relation to the effluent reduction benefits and has determined these costs were reasonable.

EPA did not find significant levels of priority or nonconventional pollutants in DRI wastewater; therefore, EPA did not consider options for BAT. For NSPS, the same technology basis as BPT technology was considered. EPA did not identify any technically feasible options that provide greater environmental protection. In addition, EPA concluded these technology options do not present a barrier to entry because all facilities currently employ the technologies. The Agency considered energy requirements and other non-water quality environmental impacts and found no basis for any different standards than the selected NSPS. Therefore, EPA is adopting NSPS limitations for the DRI segment of the other operations subcategory based on the same technology selected as the basis for BPT for this segment.

EPA identified only conventional pollutants in forging wastewaters at treatable levels. These pollutants do not pass through when discharged to POTWs from facilities within this subcategory.

9.7.3 Forging

Best Practicable Control Technology Currently Available (BPT)

The BPT technology for forging operations consists of high-rate recycle, oil/water separation, and treatment of blowdown with multimedia filtration multimedia filtration. Figure 9-13 shows the BPT technology option for forging.

High-rate recycle coupled with oil removal are key components of the technology option because they allow wastewater to be reused, thereby reducing wastewater discharge volumes and pollutant loadings. O&G is the most common pollutant in forging wastewater. As shown in Table 9-7, four of five forging sites use oil removal equipment.

Suspended solids in wastewater blowdown are removed by multimedia (mixed media) filtration prior to discharge. A granular media contained in a bed remove suspended solids from the wastewater. When the pressure drop across the filter, caused by solids accumulation in the bed, is large enough to impede flow, the bed is cleaned by backwashing. Backwashing forces wash water through the bed in the reverse direction of original fluid flow, removing accumulated solids. As shown in Table 9-7, one of the five forging sites uses multimedia filtration.

The Agency has concluded that this treatment system represents the best practicable technology currently available and should be the basis for the BPT limitation for the following reasons. First, this technology option is one that is readily applicable to all facilities in this segment. Second, the Agency assessed the total cost of water pollution controls likely to be incurred for this option in relation to the effluent reduction benefits (pollutant removals of approximately 3,500 pounds) and determined these costs were reasonable.

EPA did not find significant levels of priority or nonconventional pollutants in forging wastewater; therefore, EPA did not consider options for BAT. For NSPS, the same technology basis as BPT technology was considered. EPA did not identify any technically feasible options that provide greater environmental protection. In addition, EPA concluded these technology options do not present a barrier to entry because all facilities currently employ the technologies. The Agency considered energy requirements and other non-water quality environmental impacts and found no basis for any different standards than the selected NSPS. Therefore, EPA is adopting NSPS limitations for the forging segment of the Other Operations subcategory based on the same technology selected as the basis for BPT for this segment.

EPA identified only conventional pollutants in forging wastewaters at treatable levels. These pollutants do not pass through when discharged to POTWs from facilities within this subcategory. Therefore, EPA is not promulgating pretreatment standards for this segment.

Table 9-1

Wastewater Treatment Technologies Reported by Industry Survey Respondents for By-Product Recovery Cokemaking Sites

Treatment Technology	Number of By-Products Recovery Cokemaking Surveyed Sites Using the Technology	
	Direct Discharge (13 total sites)	Indirect Discharge (8 total sites)
Tar/oil removal	12	3
Flow equalization before ammonia still	11	4
Free and fixed ammonia still (a)	12	7
Cooling	10	2
Cyanide precipitation	1	2
Breakpoint chlorination (b)	0	0
Flow equalization before biological treatment or after ammonia still	12	5
Biological treatment by conventional activated sludge	10	2
Biological treatment by biological filtration	2	0
Biological treatment by sequential batch reactors	0	1
Multimedia or sand filtration	4	1
Carbon adsorption	4	0
Sludge dewatering	11	2

(a) One indirect discharger operates an air stripping unit instead of an ammonia still.
(b) Although this technology is not practiced by industry survey respondents, the Agency is aware of one site in North America that practices breakpoint chlorination.

Source: U.S. EPA, U.S. EPA Collection of 1997 Iron and Steel Industry Data (Detailed and Short Surveys).

Table 9-2

High-Rate Recycle and Blowdown Treatment Technologies Reported by Industry Survey Respondents for Blast Furnace Ironmaking and Sintering Sites

Treatment Technology	Number of Blast Furnace Ironmaking and Sintering Surveyed Sites Using the Technology (14 total sites) (a)
High-Rate Recycle	
Clarifier	14
Cooling tower	11
Sludge dewatering	12
Blowdown Treatment	
Metals precipitation	9
Breakpoint chlorination	2
Multimedia filtration (b)	5
Granular activated carbon	1

(a) Includes three sites that cotreat blast furnace and sintering wastewater and one site that treats sintering wastewater only.
(b) Multimedia filtration of recycled flow or low-volume blowdown flow.
Note: Summary includes direct and indirect dischargers.

Source: U.S. EPA, U.S. EPA Collection of 1997 Iron and Steel Industry Data (Detailed and Short Surveys).

Table 9-3

High-Rate Recycle and Blowdown Treatment Technologies Reported by Industry Survey Respondents for Integrated Steelmaking Sites

Treatment Technology	Number of Integrated Steelmaking Surveyed Sites Using the Technology (21 total sites) (a)
High-Rate Recycle	
Classifier (b)	12
Scale pit (c)	20
CO_2 injection	5
Clarifier	19
Cooling tower (d)	19
Sludge dewatering	13
Blowdown Treatment	
Metals precipitation	7
Multimedia filtration (e)	18

(a) One site is a non-integrated mill with a BOF.
(b) Classifier used for BOF wastewater only except for one site that uses for continuous casting wastewater.
(c) Scale pit for continuous caster wastewater only.
(d) Cooling tower used for vacuum degassing and continuous caster wastewater.
(e) Multimedia filtration of recycled flow or low-volume blowdown flow.
Note: Summary includes direct and indirect dischargers and excludes zero discharge treatment systems.

Source: U.S. EPA, U.S. EPA Collection of 1997 Iron and Steel Industry Data (Detailed and Short Surveys).

Table 9-4

High-Rate Recycle and Blowdown Treatment Technologies Reported by Industry Survey Respondents for Integrated and Stand-Alone Hot Forming Sites

Treatment Technology	Number of Integrated and Stand-Alone Hot Forming Surveyed Sites Using the Technology	
	Direct Discharge (32 total sites)	Indirect Discharge (5 total sites)
High-Rate Recycle		
Scale pit	25	2
Clarifier	17	3
Sludge dewatering	11	0
Cooling tower	20	3
Blowdown Treatment		
Metals precipitation	2	0
Multimedia filtration (a)	9	0
Once-Through Treatment (b)		
Scale pit	8	1
Clarifier	0	0
Sludge dewatering	0	0
Multimedia filtration	0	0

(a) Multimedia filtration of recycled flow or low-volume blowdown flow.
(b) Once-through treatment applies to eight sites.

Source: U.S. EPA, U.S. EPA Collection of 1997 Iron and Steel Industry Data (Detailed and Short Surveys).

Table 9-5

High-Rate Recycle and Blowdown Treatment Technologies Reported by Industry Survey Respondents for Non-Integrated Steelmaking and Hot Forming Sites

Treatment Technology	Number of Non-Integrated Steelmaking and Hot Forming Surveyed Sites Using the Technology		
	Direct Discharge (35 total sites)	**Indirect Discharge (11 total sites)**	**Direct & Indirect Discharge (2 sites)**
High-Rate Recycle			
Scale Pit with oil skimming	30	10	2
Clarifier	18	2	2
Cooling tower (a)	25	8	2
Blowdown Treatment			
Metals precipitation	8	1	1
Multimedia filtration (b)	25	3	2
Once-Through Treatment (c)			
Scale pit	2	0	0
Clarifier	1	0	0
Cooling Tower	1	0	0

(a) Cooling tower used for vacuum degassing and/or continuous casting wastewater.
(b) Multimedia filtration of recycled flow or low-volume blowdown flow.
(c) Once-through treatment only applies to two sites, both direct dischargers.

Source: U.S. EPA, U.S. EPA Collection of 1997 Iron and Steel Industry Data (Detailed and Short Surveys).

Table 9-6

In-Process and End-of-Pipe Wastewater Treatment Technologies Reported by Industry Survey Respondents for Steel Finishing Sites

Treatment Technology	Number of Steel Finishing Sites Surveyed Using the Technology	
	Direct Discharge (56 total sites)	Indirect Discharge (32 total sites)
In-Process Treatment		
Countercurrent rinsing	14	10
Recycle of fume scrubber water	33	14
Acid purification and recycle (a)	7	5
End-of-Pipe Treatment		
Oil removal (b)	26	9
Flow equalization	34	19
Hexavalent chromium reduction (c)	23	5
Metals precipitation	55	20
Gravity sedimentation/clarification	55	17
Sludge dewatering	52	18

(a) Applies to sites with sulfuric acid and nitric/hydrofluoric acid baths for stainless products.
(b) Oil removal technologies in place were primarily oil water separators and oil skimming; however, one site used ultrafiltration.
(c) Applies to sites with hexavalent-chromium-bearing wastewater.
Note: 47 sites reported using fume scrubbers.

Source: U.S. EPA, U.S. EPA Collection of 1997 Iron and Steel Industry Data (Detailed and Short Surveys).

Table 9-7

High-Rate Recycle Equipment and Blowdown Wastewater Treatment Technologies Reported by Industry Survey Respondents for Direct-Reduced Ironmaking (DRI) and Forging Sites

Treatment Technology	Number of Sites Surveyed Using the Technology
DRI	(1 site)
High-Rate Recycle	
Classifier and clarifier	1
Cooling Tower	1
Blowdown Treatment	
Multimedia Filtration	1
Forging	(5 sites)
Oil Removal (a)	4
Multimedia Filtration	1

(a) Oil removal may be used as high-rate recycle or blowdown treatment.
Note: Summary includes direct and indirect dischargers.

Source: U.S. EPA, U.S. EPA Collection of 1997 Iron and Steel Industry Data (Detailed and Short Surveys).

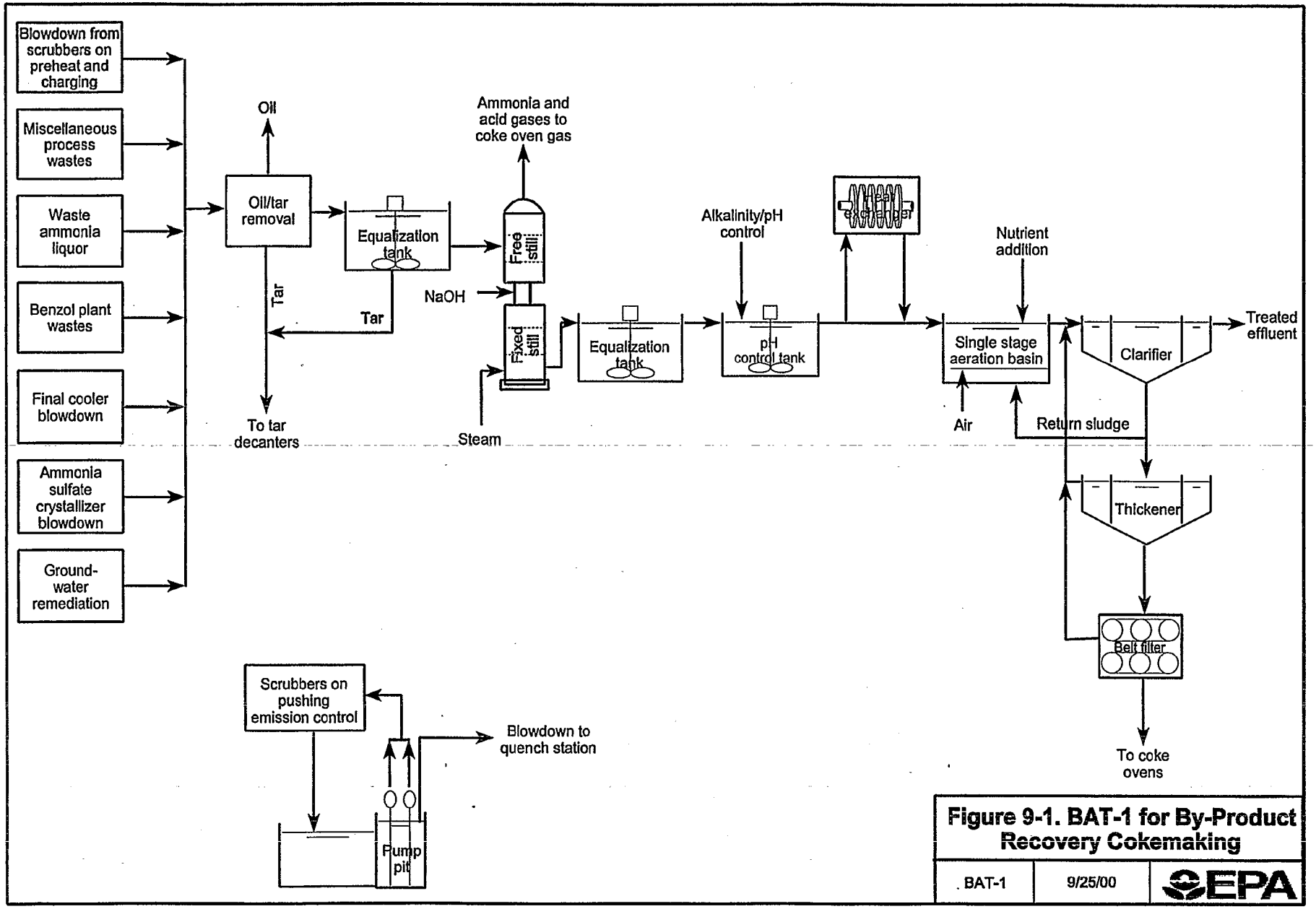

Figure 9-1. BAT-1 for By-Product Recovery Cokemaking

BAT-1	9/25/00	EPA

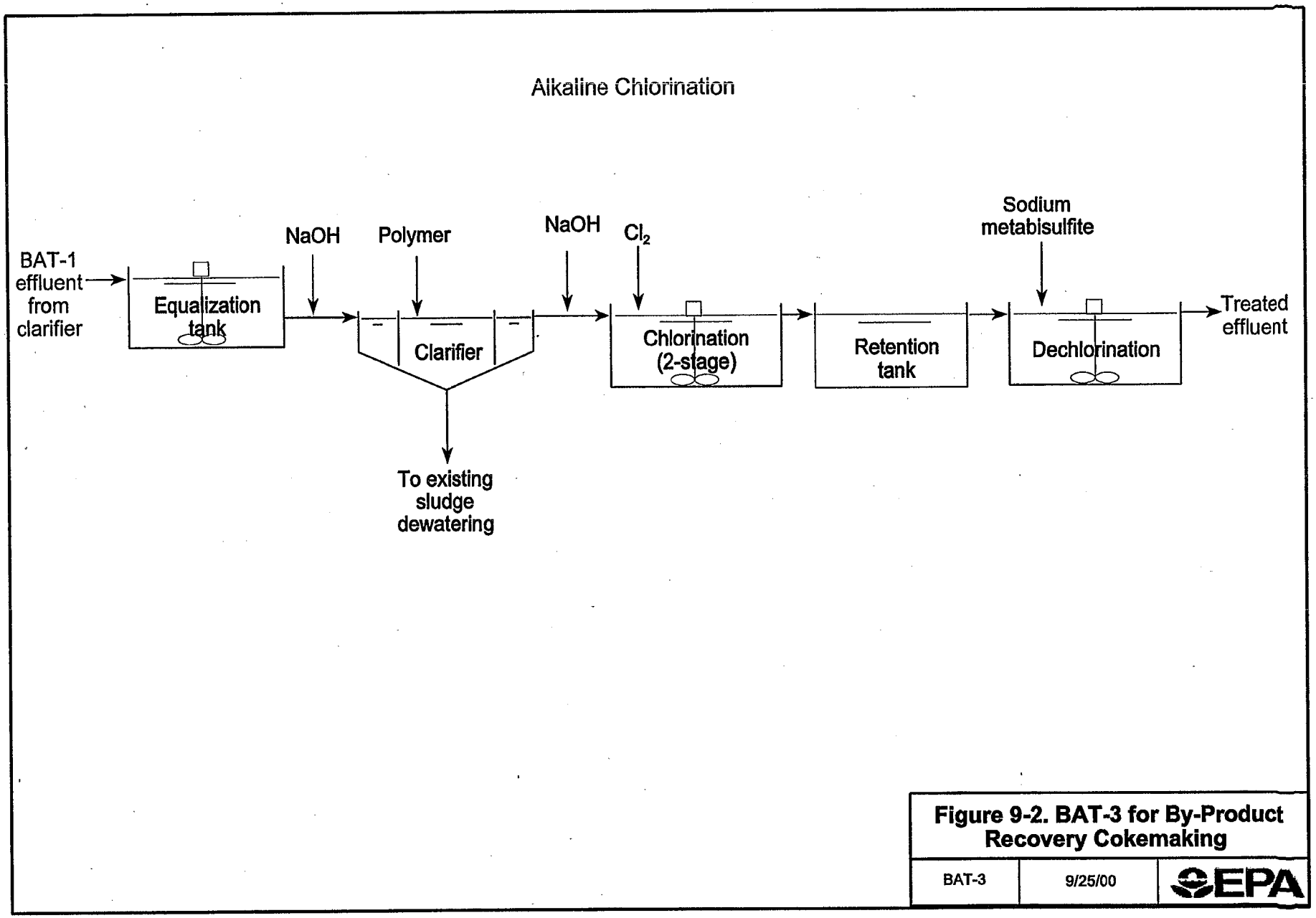

Figure 9-2. BAT-3 for By-Product Recovery Cokemaking

BAT-3	9/25/00	EPA

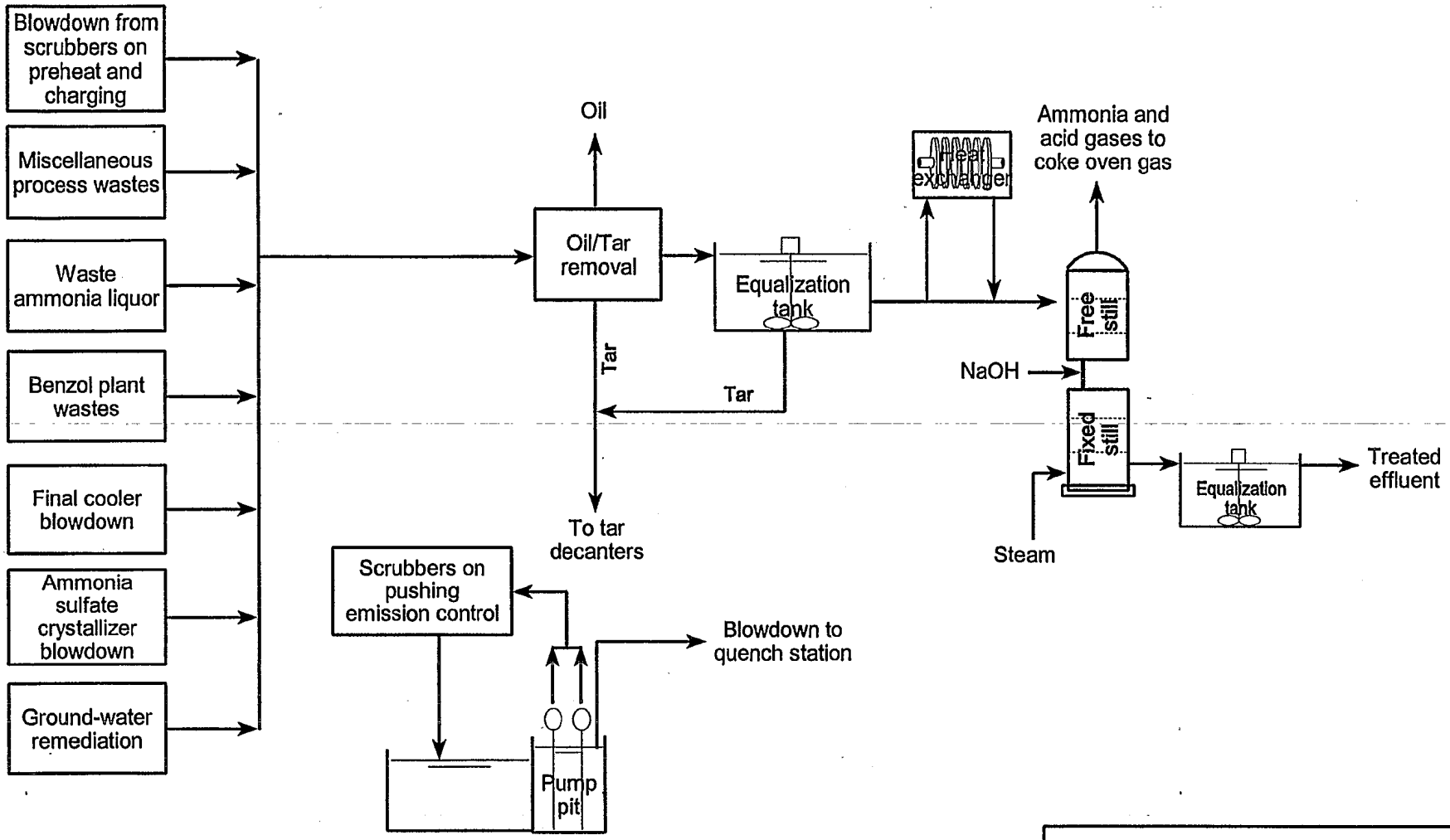

Figure 9-3. PSES-1 for By-Product Recovery Cokemaking

PSES-1	9/25/00	EPA

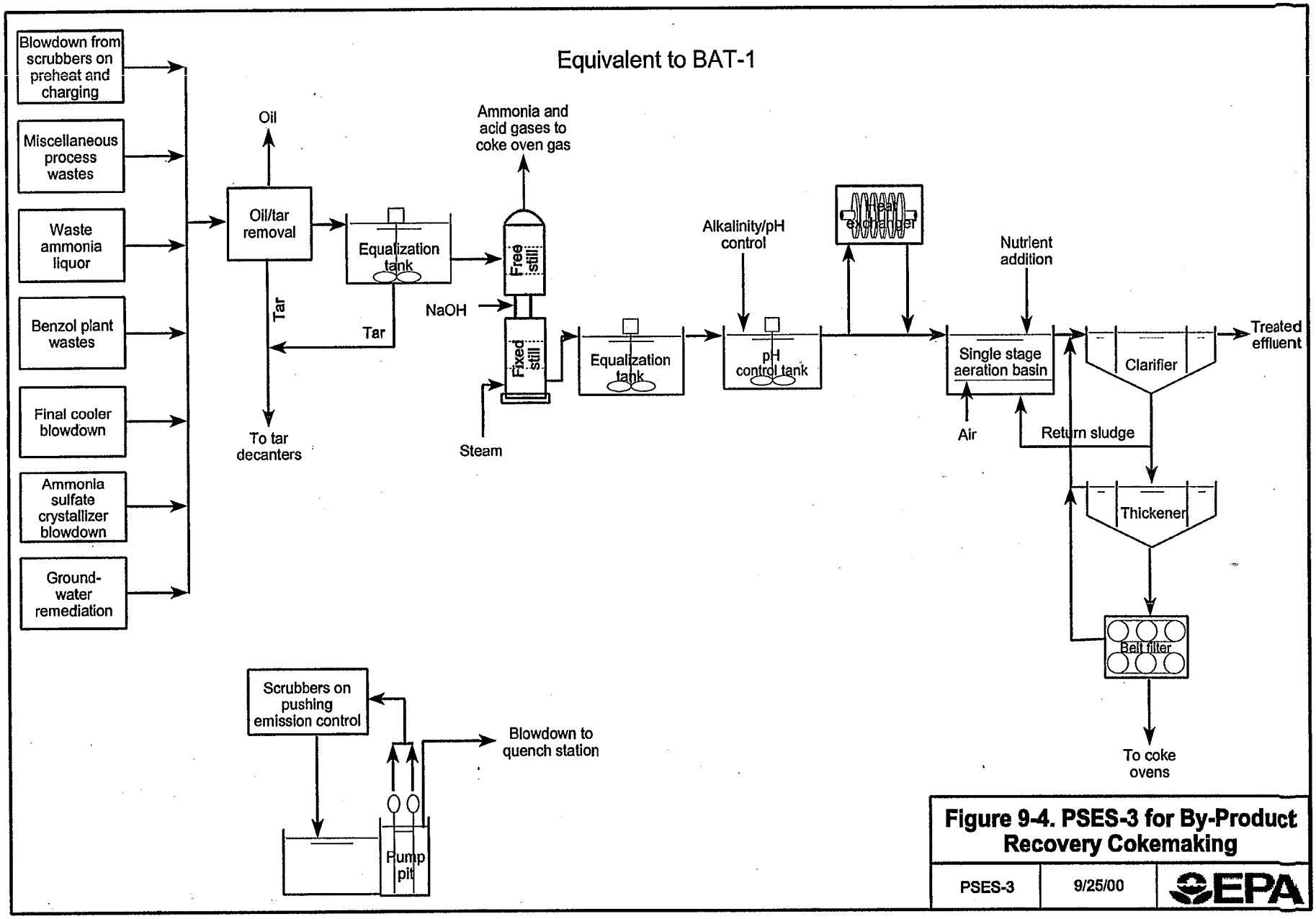

Figure 9-4. PSES-3 for By-Product Recovery Cokemaking

PSES-3	9/25/00	EPA

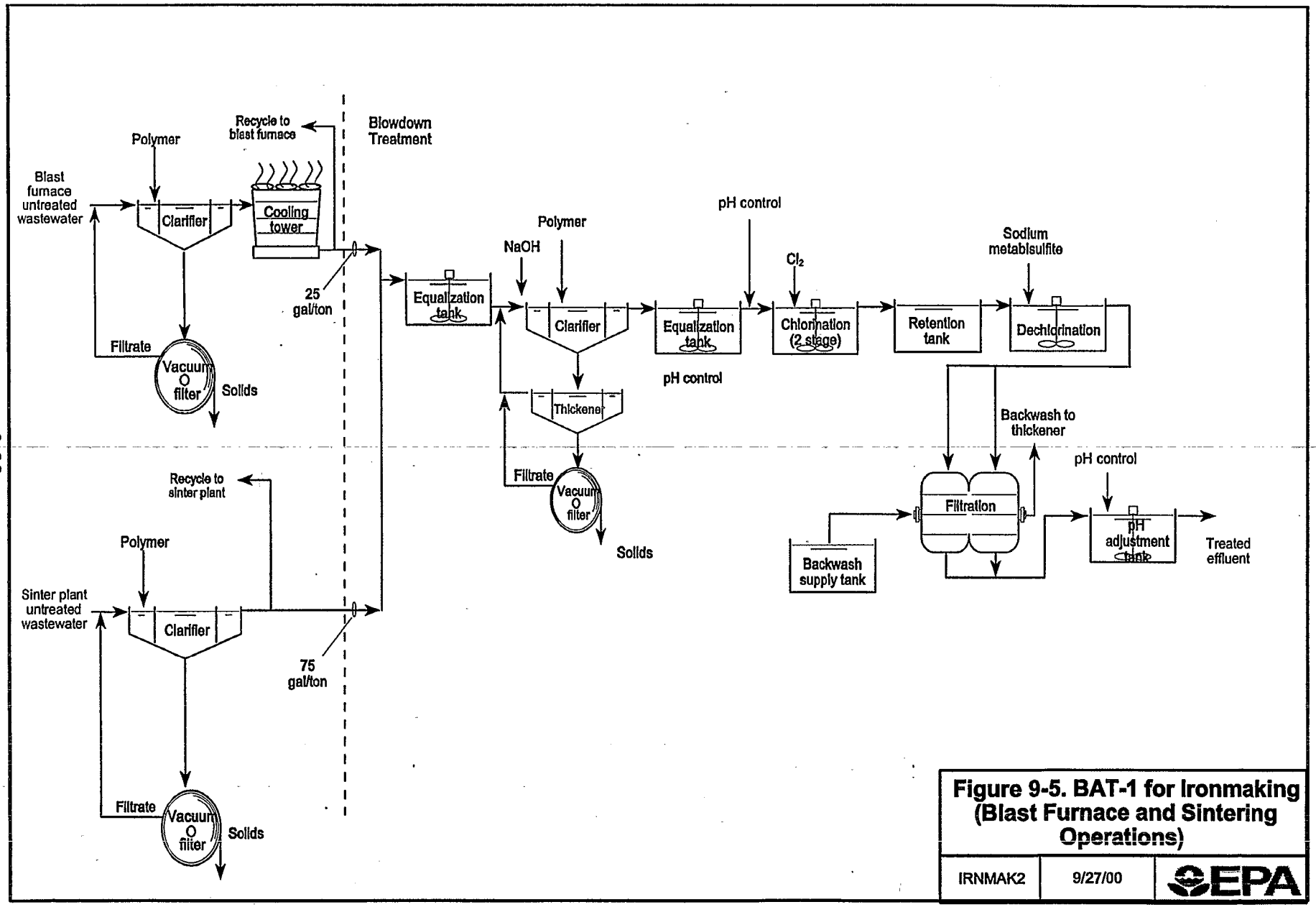

Figure 9-5. BAT-1 for Ironmaking (Blast Furnace and Sintering Operations)

IRNMAK2	9/27/00	EPA

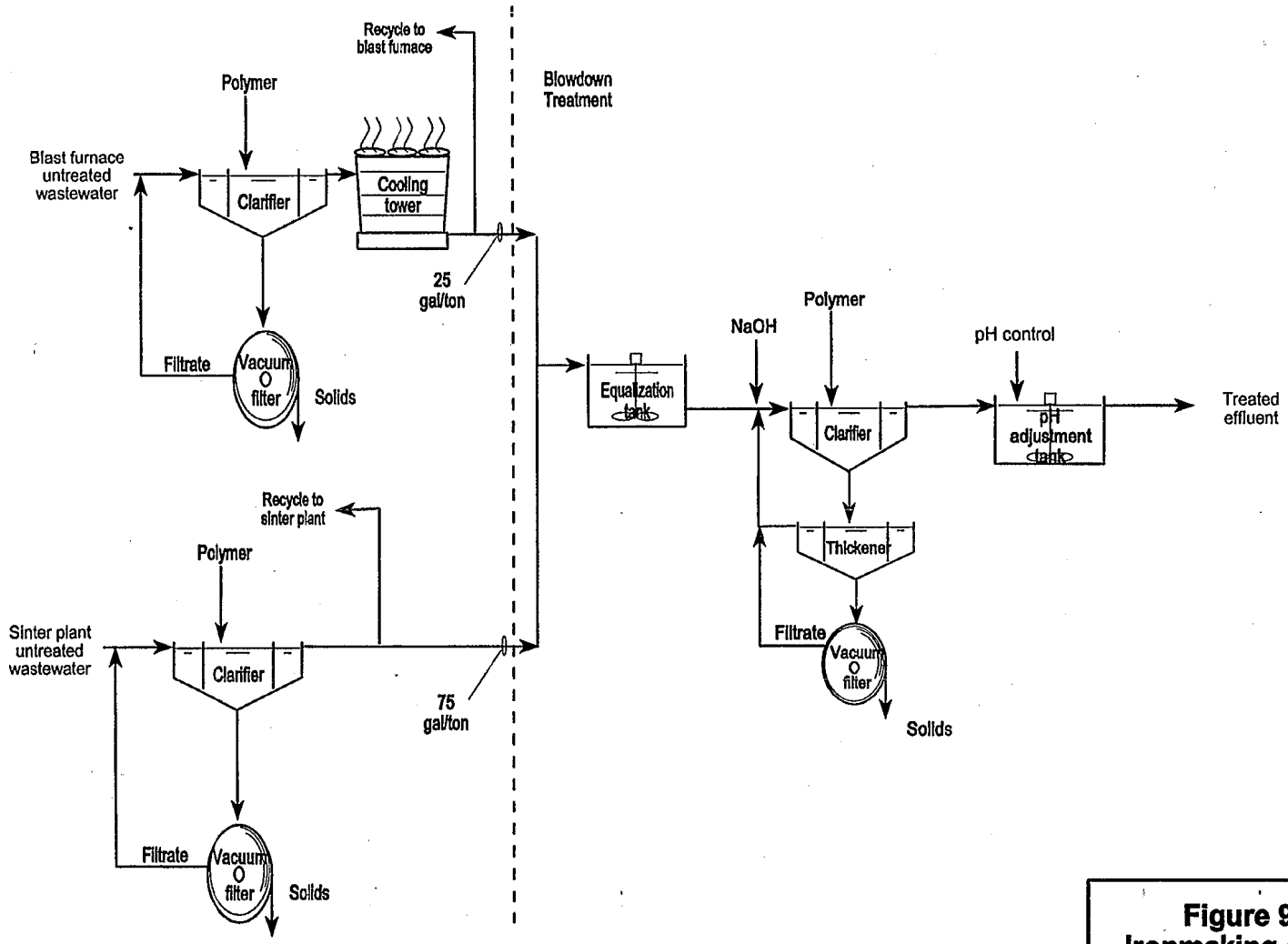

Figure 9-6. PSES-1 for Ironmaking (Blast Furnace and Sintering Operations)

IRNMAK1	9/27/00	EPA

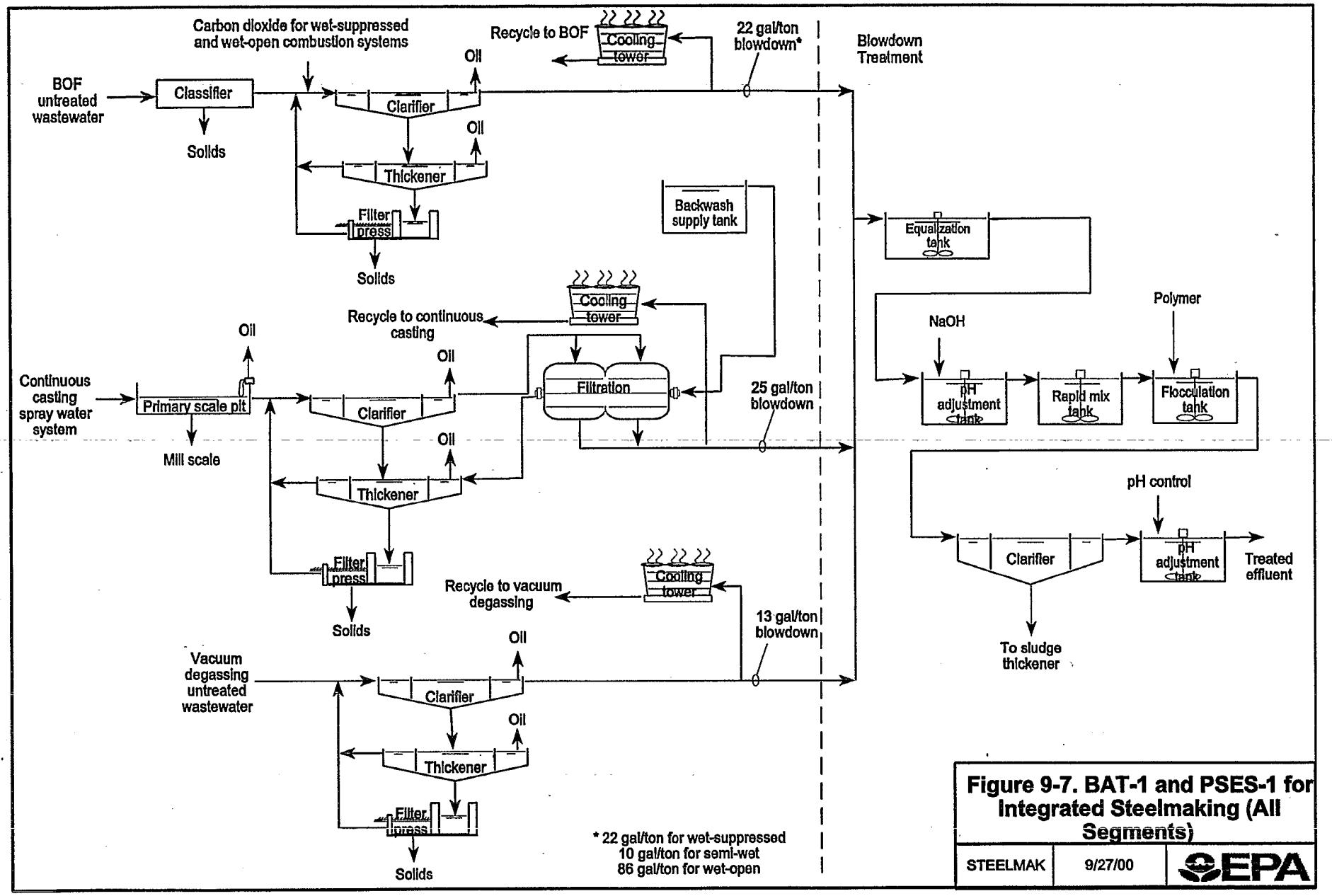

Figure 9-7. BAT-1 and PSES-1 for Integrated Steelmaking (All Segments)

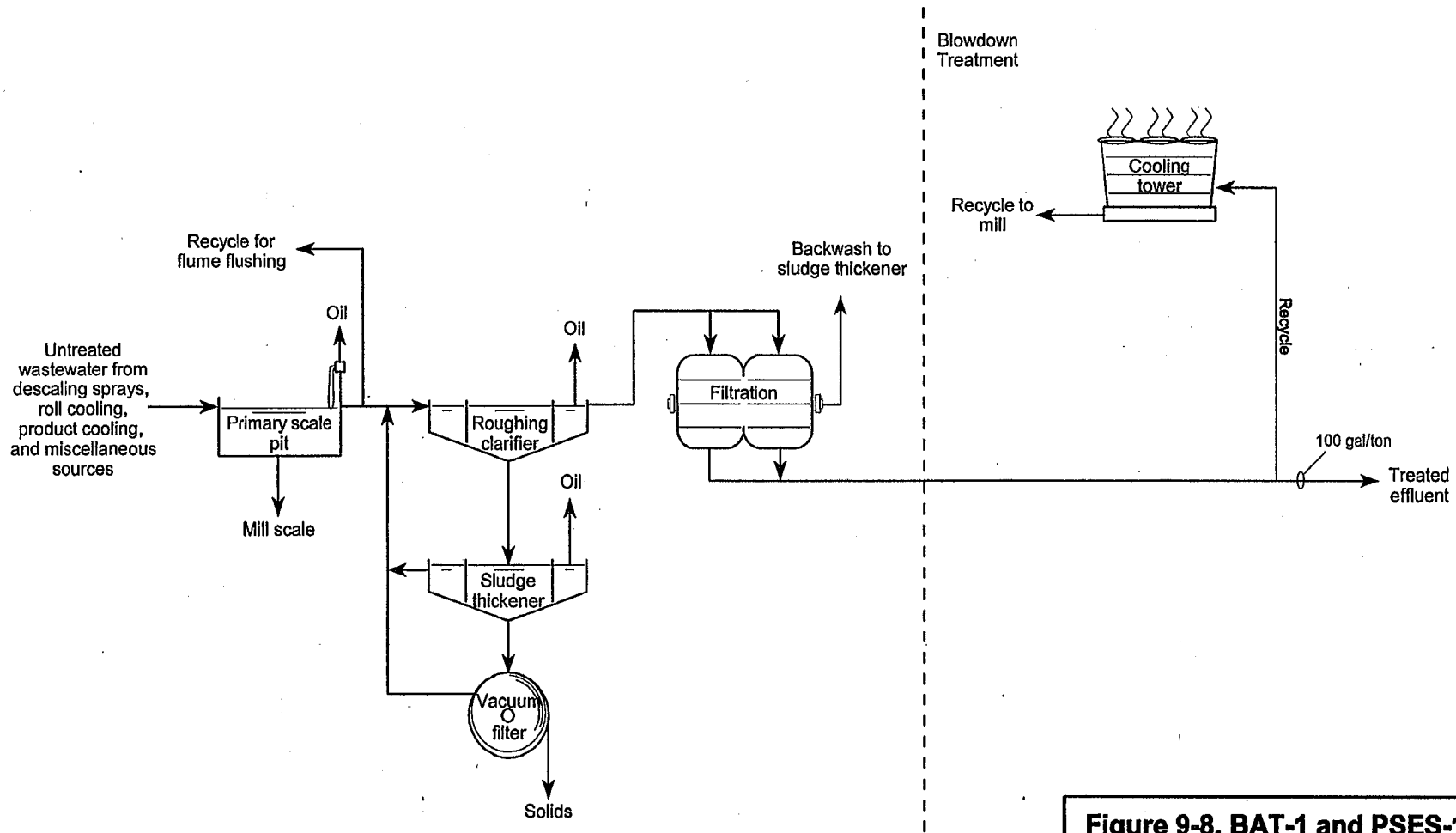

Figure 9-8. BAT-1 and PSES-1 for Integrated and Stand-Alone Hot Forming (All Segments)

HTFRMSA	9/27/00	EPA

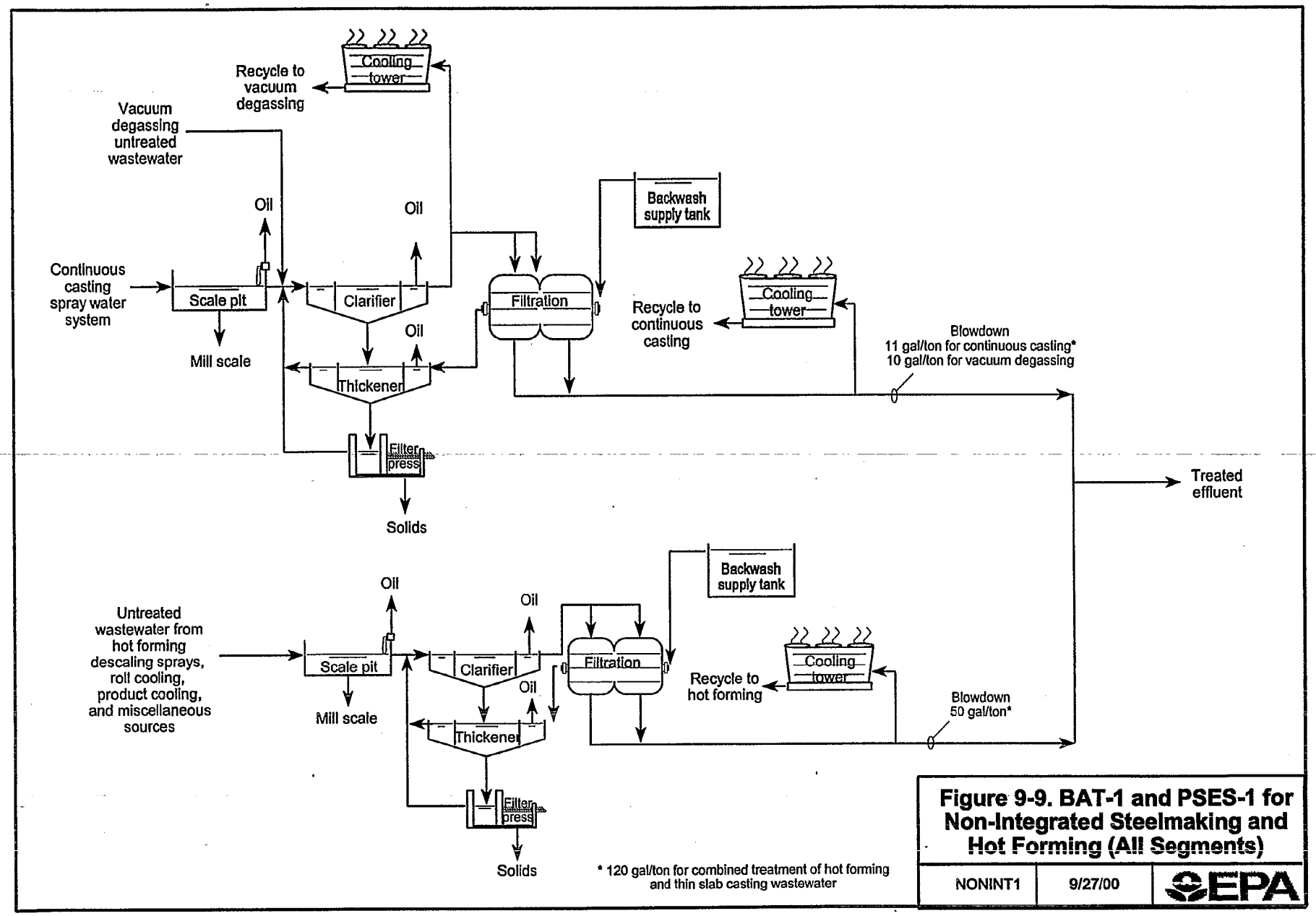

Figure 9-9. BAT-1 and PSES-1 for Non-Integrated Steelmaking and Hot Forming (All Segments)

NONINT1	9/27/00	EPA

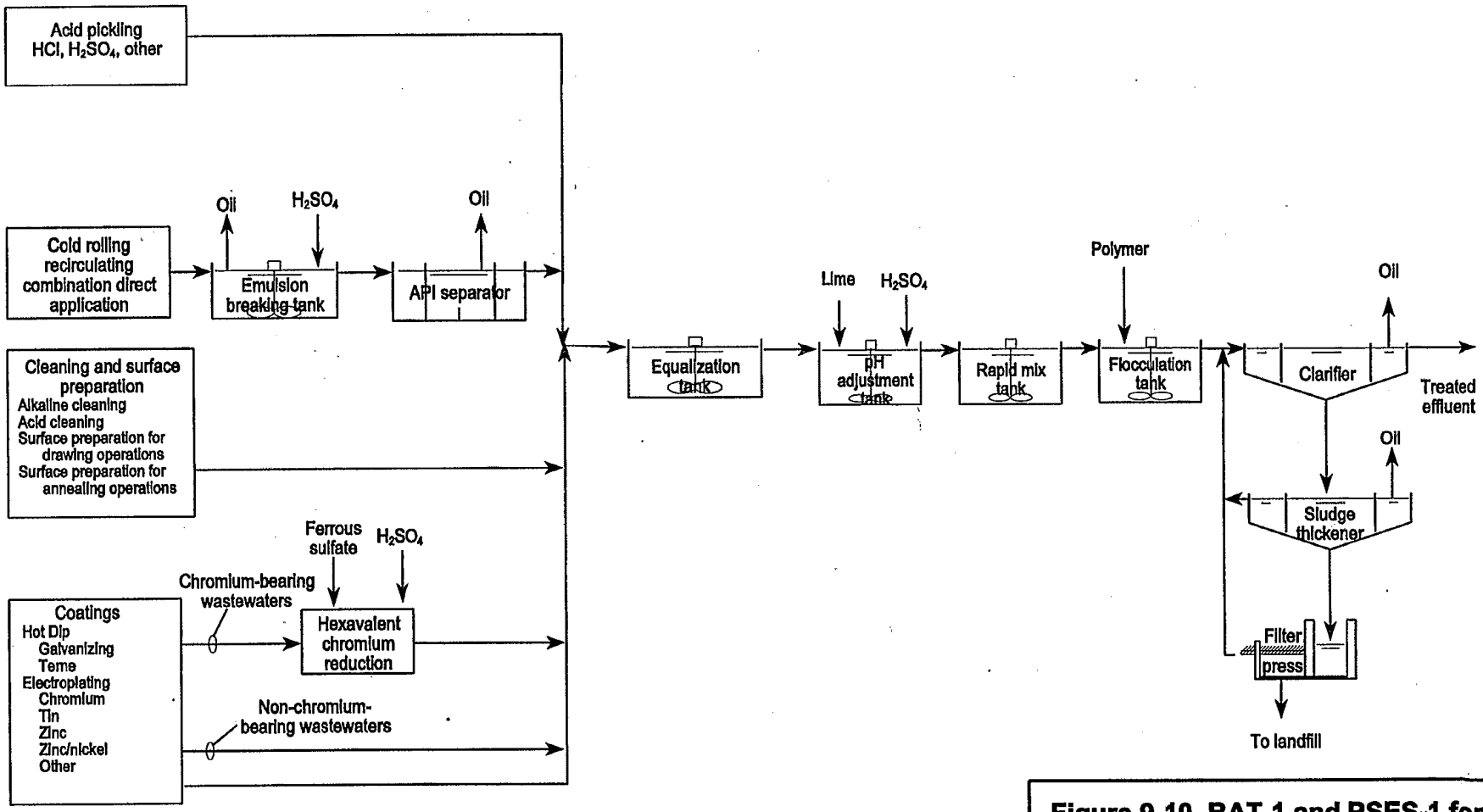

Figure 9-10. BAT-1 and PSES-1 for Carbon and Alloy Steel Finishing

CAR_FINISH	9/27/00	EPA

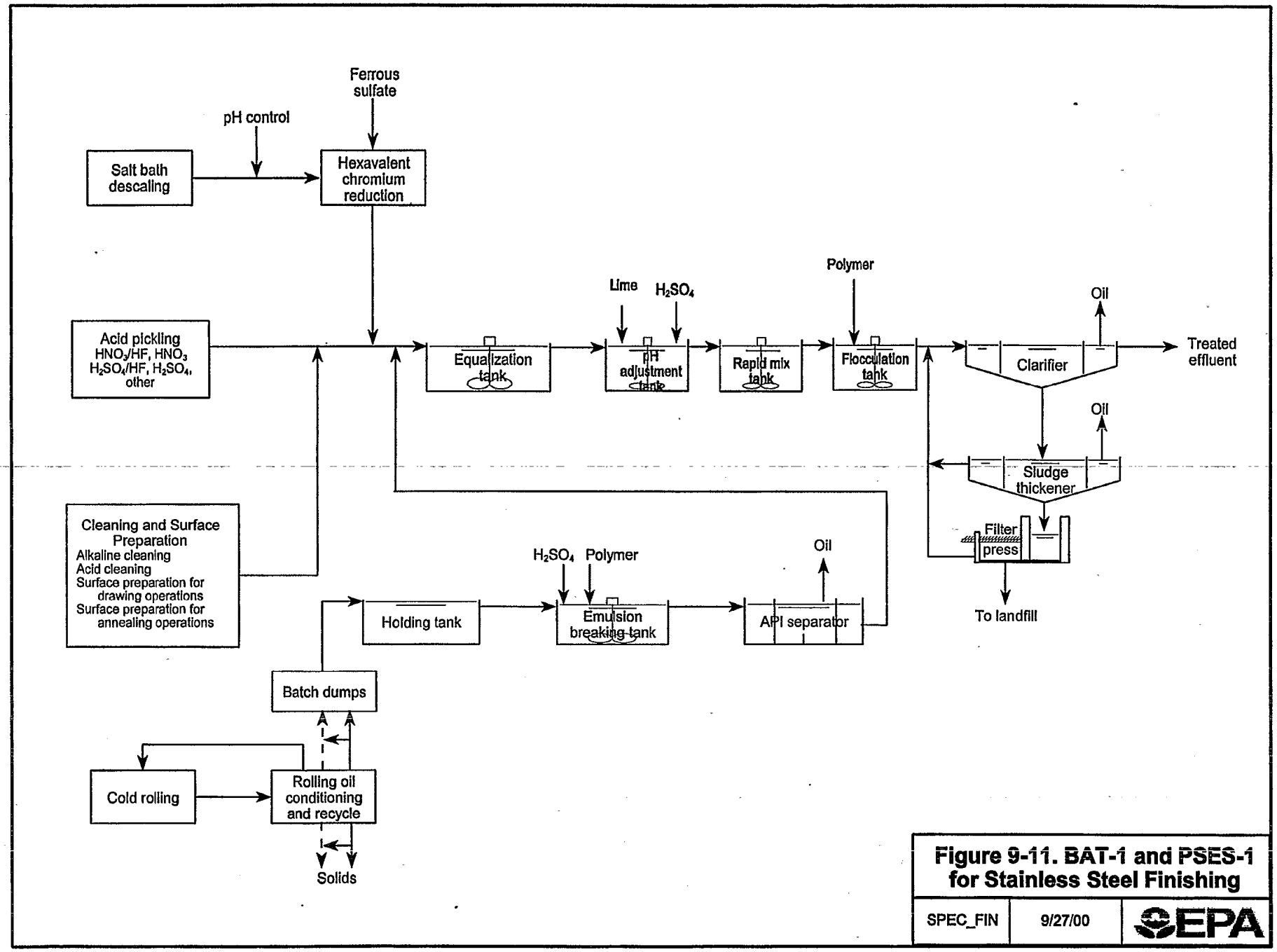

Figure 9-11. BAT-1 and PSES-1 for Stainless Steel Finishing

SPEC_FIN	9/27/00	EPA

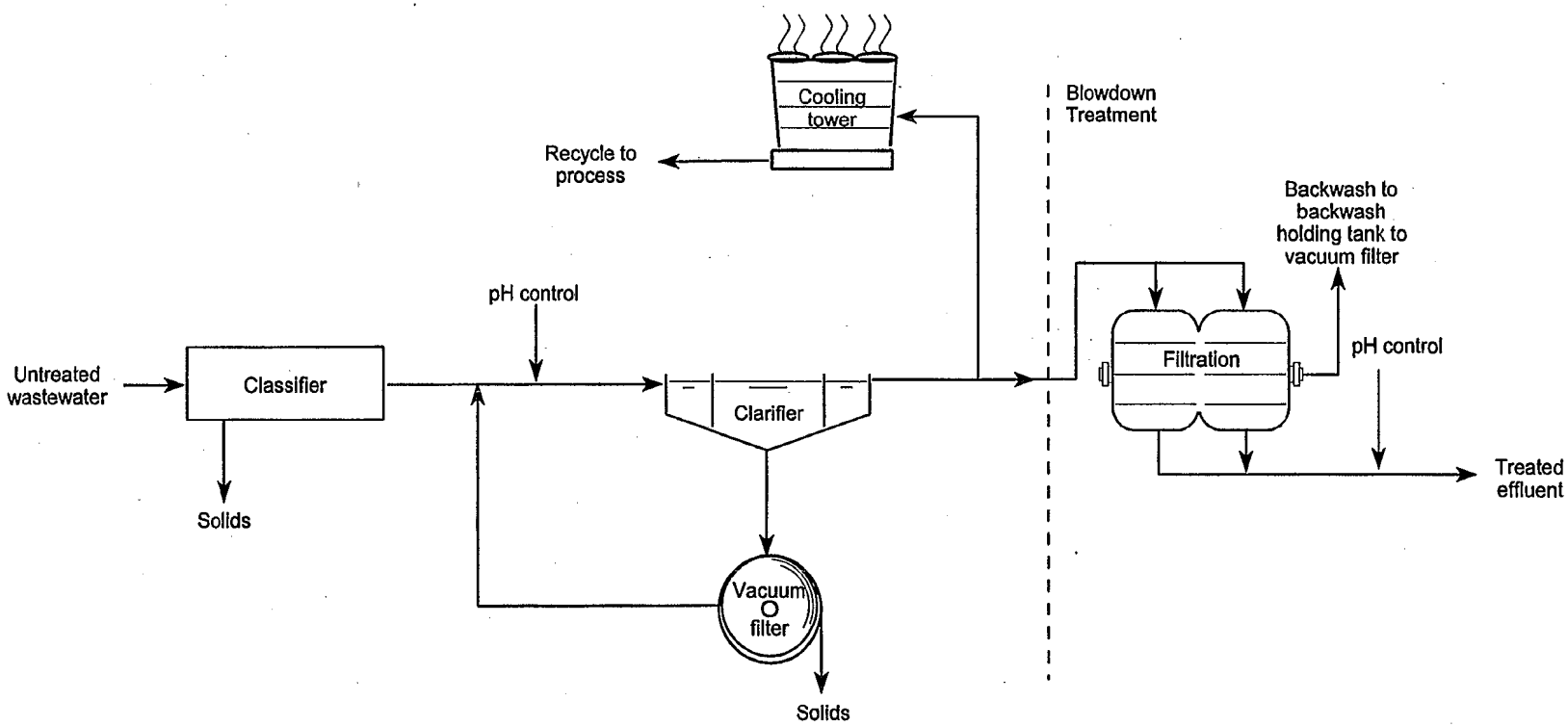

Figure 9-12. BPT-1 for Direct Reduced Ironmaking

DRI	9/27/00	EPA

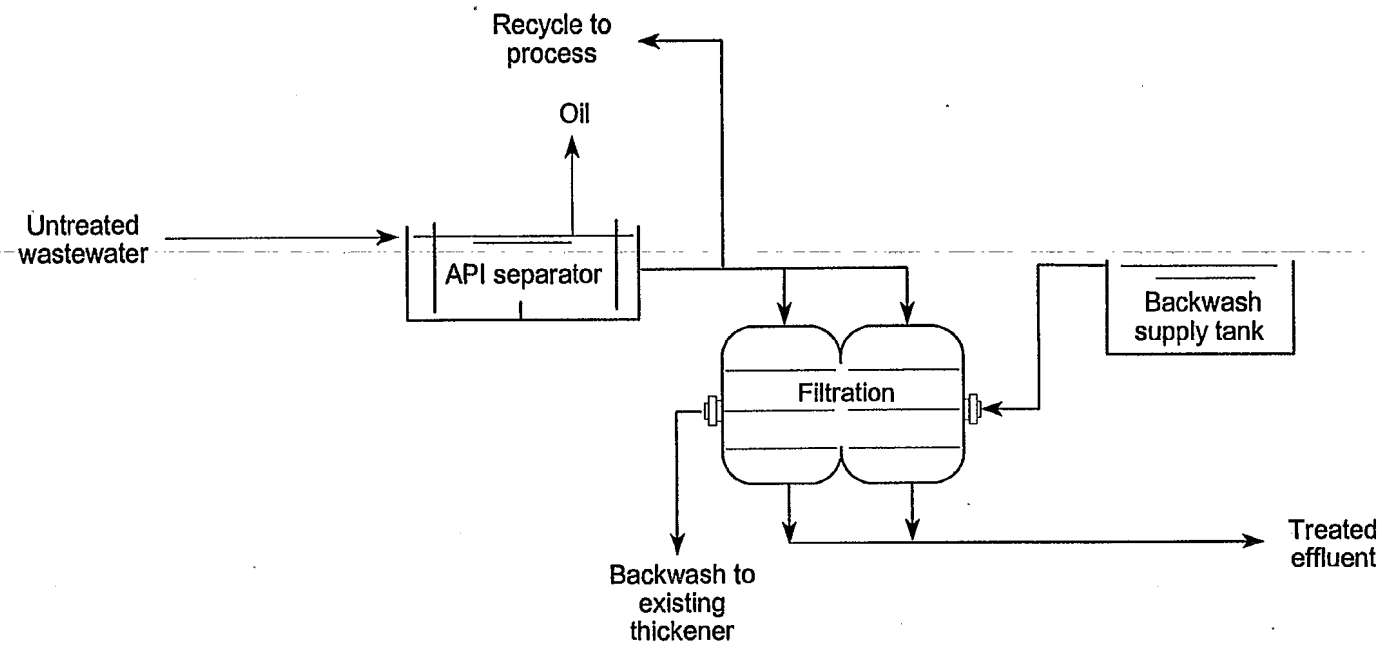

Figure 9-13. BPT-1 for Forging

FORGING	9/27/00	EPA

SECTION 10

INCREMENTAL INVESTMENT AND OPERATING AND MAINTENANCE COSTS FOR THE REGULATION

This section presents EPA's estimates of incremental investment costs and incremental operating and maintenance costs for the iron and steel industry to comply with the technology options considered and described in Section 9. EPA estimated the compliance costs for each technology option in order to determine potential economic impacts on the industry. EPA also weighed these costs against the effluent reduction benefits resulting from each technology option. All estimates are based on data collected for the calendar year 1997. Section 11 presents Agency estimates of corresponding annual pollutant loadings and removals for each technology option. The Agency is reporting estimates of potential economic impacts associated with the total estimated annualized costs of the regulation separately (Reference 10-1).

Section 10.1 describes EPA's methodology to estimate costs to achieve the effluent quality for each technology option in each subcategory. Section 10.2 summarizes the results of the cost analyses, by subcategory (arranged according to the proposed subcategorization), for each technology option evaluated.

10.1 Methodology

EPA developed site-specific cost estimates using data collected from industry survey responses and Agency site visits and sampling episodes. Section 3 provides more information on Agency data collection efforts. EPA also solicited data from vendors of various wastewater treatment technologies, obtained data collected by state agencies, surveyed the technical literature, and enlisted the services of an engineering and design firm that has installed wastewater treatment equipment in the iron and steel industry. The Agency also revised subcategory or specific facility cost estimates, as appropriate, to incorporate comments submitted in response to the proposed rule. Section 10.2 discusses these revisions.

As discussed in Section 9, the Agency developed technology options for each iron and steel subcategory. When evaluating costs associated with these technology options, EPA considered the following components of each technology option:

- ***Effluent concentrations.*** EPA used data from sites with treatment technologies representing each technology option to develop model effluent concentrations for each regulated pollutant in a subcategory. Using these same datasets, EPA calculated long-term average effluent concentrations (LTAs) and variability factors for the development of limitations and standards. The Agency re-evaluated LTAs for certain subcategories after proposal. EPA's cost estimates incorporated LTAs revised after proposal. Section 14 discusses the development of LTAs and variability factors for each technology option. Section 12 discusses the regulated pollutants for each subcategory. The Agency used data supplied

through industry survey responses and other sources to determine LTAs of each regulated pollutant reported by all of the sites evaluated in the costing analysis.

- ***Treatment technology.*** EPA considered the in-process controls, pollution prevention measures, and end-of-pipe treatment units comprising each technology option as model pollution control technologies.

- ***Production-normalized flow rates (PNFs).*** EPA developed model PNFs representing appropriate process water management and water conservation practices for each technology option. When developing model PNFs, the Agency took into account the nature of subcategory process operations, the rates at which water was applied to processes, recirculating process water quality requirements, and good water management practices. The Agency re-evaluated model PNFs after proposal. EPA's cost estimates incorporated PNFs revised after proposal. For more information on the development of model PNFs, refer to Section 13.

The Agency considered these components of each technology option to judge whether wastewater treatment units, entire treatment or high-rate recycle systems, or modifications in operating practices would be necessary for individual sites to achieve model pollutant loadings for a particular technology option. EPA calculated model pollutant loadings by multiplying the model PNFs and model LTAs discussed in Sections 13 and 14, respectively. For each technology option, EPA compared the model pollutant loadings for each regulated pollutant with baseline loadings calculated for each site to assess water management practices and wastewater treatment performance at sites. The Agency calculated pollutant loadings for each site from the sources identified in Section 11. If it determined that a site exceeded the model pollutant loadings for a technology option, then EPA compared the technology in place and its operation at the site with the technology basis for the option. EPA evaluated industry survey responses to determine wastewater treatment technologies used at sites. Tables 9-1 through 9-7 in Section 9 summarize the results of the technology-in-place analysis for each iron and steel subcategory. EPA then determined the amount of investment, operating and maintenance, and/or one-time costs for those equipment items, water management practices, or operating and maintenance practices that would be incurred if sites in each subcategory were to implement the model technology options.

Sites can use many possible combinations and variations of the treatment system components of the technology bases considered to achieve the effluent limitations and standards considered for this rule. In some instances, the Agency observed that sites operate additional or equivalent treatment technologies to those considered for this rule.

For some survey respondents, effluent concentration data were not available for certain regulated pollutants or available effluent concentration data corresponded to outfalls that contained substantial amounts of noncontact cooling water or non-process wastewater. In these

cases, the Agency used PNFs and technology in place solely to assess pollution control performance.

Several survey respondents reported cotreating wastewater generated from manufacturing operations associated with multiple subcategories at a wastewater treatment plant that discharged treated effluent through a single, permitted outfall. In these cases, EPA compared the sum of the model pollutant loadings for each applicable subcategory to the pollutant loadings calculated from effluent concentration and flow data corresponding to these combined treatment outfalls. Where it determined that a site exceeded the sum of the applicable model pollutant loadings, EPA estimated the cost to treat and/or recycle wastewater from each applicable subcategory in separate treatment and/or high-rate recycle systems consisting of the applicable model treatment technologies.

EPA developed an electronic design and cost model to estimate costs using the methodology described above. Sections 10.1.1, 10.1.2, and 10.1.3 describe how EPA developed cost equations for use in this model to estimate investment, operating and maintenance, and one-time costs associated with various pollution control technologies, respectively. For certain blast furnace, continuous casting, and hot forming operations lacking high-rate recycle systems, EPA developed cost estimates on a site-specific basis independent of the cost model noted above (see Section 10.1.1).

EPA estimated costs for the iron and steel industry for the base year 1997. The Agency included sites (or operations) in the costing analysis if a site operated at least one day during the 1997 calendar year. Even if a site (or operation) shut down after 1997, it was retained in the costing analysis, except for one site. This site shut down operations after 1997 and EPA was unable to verify costing assumptions and the site's reported high flow; therefore, this site was removed from the costing analysis. However, if a site (or operation) commenced after 1997, EPA did not include the site (or operation) in the costing analysis. For some sites, 1997 data did not represent normal operating conditions; for those sites, EPA used data from alternate years. Several sites operated during only part of 1997 because of strikes, shut downs, or start-ups. For these sites, EPA used production, analytical, and flow rate data from years that the sites indicated were representative of normal operations. If sites installed or significantly altered wastewater treatment systems after 1997, EPA used the data that represented the wastewater treatment configurations as of 1997. For more information regarding the use of 1997 data in EPA's analyses, refer to Section 3.

EPA excluded from the cost analysis sites reporting zero discharge of wastewater. The Agency assumed that these sites will continue to operate in this manner and that effluent limitations will not apply to them because no process wastewater is discharged to POTWs or surface waters.

10.1.1 Investment Costs

For each wastewater treatment facility in each subcategory, EPA determined the equipment items necessary to achieve the model pollutant loadings following the methodology

described in Section 10.1. The Agency estimated investment costs for the following components:

- ***Equipment:*** Purchased equipment items, including freight;
- ***Installation:*** Mechanical equipment installation, piping installation, civil/structural work (site preparation and grading, construction of equipment foundations and structural supports), materials and labor to construct buildings or enclosed shelters, and electrical and process control instrumentation;
- ***Indirect costs:*** Costs for temporary facilities during construction and installation, spare parts, engineering procurement and contract management, commissioning and start-up, and labor costs for site personnel to oversee equipment installation (owner team costs); and
- ***Contingency:*** Additional costs to account for unforeseen items in vendor and/or contractor estimates.

The Agency developed investment cost estimates using the following data sources:

- ***Engineering and Design Firm.*** EPA enlisted an engineering and design firm to estimate investment costs for design flow rates spanning the range of actual industry flow rates for the following treatment systems, which comprise various technology options considered for this rulemaking:
  - Granular activated carbon filtration of cokemaking wastewater (component of BAT-4, by-product recovery cokemaking segment),
  - Breakpoint chlorination of cokemaking wastewater (component of BAT-3 and PSES-4, by-product recovery cokemaking segment),
  - Metals precipitation of blast furnace and sintering wastewater (component of BAT-1 and PSES-1, ironmaking subcategory),
  - Breakpoint chlorination of blast furnace and sintering wastewater (component of BAT-1, ironmaking subcategory),
  - Metals precipitation of basic oxygen furnace steelmaking, vacuum degassing, and continuous casting wastewater (component of BAT-1 and PSES-1, integrated steelmaking subcategory), and
  - Polishing of wastewater through multimedia filtration (component of BAT-4, by-product recovery cokemaking segment; BAT-1,

ironmaking subcategory; sintering subcategory; BAT-1 and PSES-1, integrated and stand-alone hot forming subcategory; and BAT-1 and PSES-1, non-integrated steelmaking and hot forming subcategory).

The engineering and design firm developed investment costs for these treatment systems by determining equipment requirements and specifications according to the specified design flow rates. The firm did not use cost factors to estimate installation costs; instead, it provided line-item estimates for mechanical equipment installation, piping installation, equipment foundations (including site preparation and grading), equipment structural support, buildings, and electrical and process control instrumentation. Figures 10-1 through 10-6 present these treatment systems and Table 10-1 presents the assumptions used to develop these cost estimates. These assumptions represent typical considerations for add-on treatment technologies for existing wastewater treatment systems and are based on EPA's examination of industry survey responses, Agency site visits, and engineering and design firm experience. Tables 10-2 through 10-13 present corresponding design specifications and itemized cost sheets. Note that installation costs were based on a union labor rate of $60 per hour, which is based on an engineering and design firm's experience with actual wastewater treatment installations in the iron and steel industry. EPA then developed equations for use in the computerized cost model as described below.

To estimate investment costs for treatment systems and units other than those specified above, EPA used cost data obtained from capital cost survey responses and vendor quotes (described below) in conjunction with cost factors. The engineering and design firm developed cost factors to estimate installation costs associated with the following:

— Shipping of equipment,

— Labor for mechanical equipment installation,

— Site preparation and grading,

— Equipment foundations and structural support,

— Buildings to house treatment equipment and provide enclosed shelter,

— Purchase and installation of piping,

— Electrical and process control instrumentation,

— Temporary facilities during construction and installation,

— Spare parts,

— Engineering procurement and contract management,

— Commissioning and start-up,

— Labor costs for site personnel to oversee equipment installation, and

— Contingency costs.

Table 10-14 lists the cost factors that EPA used, in conjunction with cost data from capital cost survey responses and vendor quotes, to estimate installed costs of various treatment systems and units for this rulemaking. Note that EPA based these cost factors on an evaluation of past project costs and budgetary estimates for actual wastewater treatment installations in the iron and steel industry. Furthermore, these cost factors reflect installation costs based on typical union labor rates and durations. The Agency estimated the investment costs of treatment units for various design flow rates by multiplying the purchased equipment cost (developed from vendor and capital cost survey data, as described below) by approximately 355 percent (the sum of the cost factors listed in Table 10-14). EPA then plotted investment cost versus the design flow rate to develop cost equations for use in its cost model. The Agency performed a regression analysis on this data and determined that a linear relationship was the 'best fit' between the costs and flow rates in the flow ranges considered. For treatment units that were costed across a wide range of flow rates, EPA extrapolated separate lines for incremental flow ranges. Otherwise, the Agency used the median cost per gallon per minute to estimate investment costs.

- ***Vendor and Capital Cost Survey Data.*** The Agency developed cost estimates for purchased equipment and ancillary equipment (pumps, piping, sumps, etc.) for various sizes of the technology basis components for each option using data from capital cost survey responses and vendor quotes. As described above, EPA used this cost data in conjunction with cost factors to estimate investment costs.

Table 10-15 summarizes the investment cost equations used to estimate costs for technology option components, the applicable subcategories and technology options, and the sources of these estimates (engineering and design firm or capital cost surveys and vendor information). Additional information on the development of cost equations for equipment items

derived from capital cost survey and vendor data are located in Section 14.5 of the Iron and Steel Administrative Record, DCN IS10825.

EPA identified several sites with once-through wastewater treatment systems that would need to invest in high-rate recycle systems to achieve model PNFs for some technology options. EPA determined equipment items necessary to achieve high-rate recycle and gathered site-specific information from Agency surveys, site visits, and sampling episodes conducted during this rulemaking. Because these systems are complex and not amenable to a standardized costing approach, the Agency requested the engineering and design firm to estimate investment costs on a site-specific basis using available site-specific information and data.

When estimating costs for sites for entire high-rate recycle or wastewater treatment systems (which would likely need significant land area), the Agency took into account land availability, when such data were available. For sites for which EPA estimated costs for add-on technologies needing minimal space, the Agency assumed, based on its experience in visiting many industrial sites, that additional space for those technologies was available near existing wastewater treatment systems.

EPA sized wastewater treatment components for each site according to flow rates reported in the industry survey responses. When industry survey responses indicated that existing treatment systems also treated non-process water such as ground water, storm water, or noncontact cooling water, the Agency also included those flows. While EPA does not believe that these other sources should be treated with process water in all cases, flow rates from these sources were included to adequately size wastewater treatment components. For sites that EPA estimated would install new blowdown treatment systems to achieve model treatment system effluent quality, the Agency sized these blowdown treatment systems according to model PNFs (in gallons per ton). EPA sized these blowdown treatment systems by multiplying a site's reported production rate by the model PNF.

10.1.2 Operating and Maintenance Costs

EPA developed estimates of incremental operating and maintenance costs by evaluating operating and maintenance cost data from the detailed and short surveys, supplemented with data from other sources, specified below. EPA used data reported in survey responses when available. The Agency estimated operating and maintenance costs for the following items:

- ***Labor.*** Labor costs associated with general operating and maintenance of treatment equipment. EPA used a labor rate of $29.67 per hour to convert the labor requirements of each technology into annual costs. The Agency obtained a base labor rate from the Monthly Labor Review, which is published by the U.S. Bureau of Labor Statistics of the U.S. Department of Labor (Reference 10-2). The Agency averaged monthly values for 1997 for production labor in the blast furnace and basic steel products categories to obtain a base labor rate of approximately $20.90 per hour. Forty-two

percent of the base labor rate was then added for overhead. EPA derived this percentage to account for medical and dental insurance, vacation, sick leave, unemployment tax, workman's compensation, and retirement benefits to obtain the $29.67-per-hour labor rate. The Agency based this percentage on typical employer costs for hourly employees. Industry survey responses indicated labor rates between $13.00 and $85.64. The median labor rate reported by industry surveys was $28.95.

Data collected from industry survey responses, site visits, and other contacts with the industry show that the great majority of wastewater treatment systems are staffed on a 24-hour basis. This includes complex wastewater treatment systems for by-product recovery cokemaking, ironmaking, and steelmaking operations; hot forming operations with mechanical treatment systems; steel finishing operations where wastewater from multiple processes are cotreated; and treatment facilities that cotreat wastewater generated from manufacturing operations from multiple subcategories. Consequently, the Agency used 24-hour staffing as the baseline labor staffing complement, where applicable. EPA estimated incremental labor hours associated with the assigned wastewater treatment system upgrades based on additional operating and maintenance requirements. These additional labor hours were then multiplied by the $29.67-per-hour labor rate to assess incremental labor cost impacts of the technology options.

- ***Maintenance.*** Costs (excluding labor costs) associated with upkeep of equipment, repairs, operating supplies, royalties, and patents. When these costs could not be estimated based on industry survey responses, the Agency assumed annual maintenance costs to be 6 percent of the investment cost of equipment (Reference 10-3). Maintenance costs reported by industry ranged from 0.2 percent to 6.3 percent of investment costs. The median maintenance cost, as a percentage of investment costs, reported by industry was 1.1 percent.

- ***Chemicals.*** Costs for chemicals used for various high-rate recycle and wastewater treatment technologies. EPA evaluated industry survey responses to determine chemical usage rates for well-operated treatment and recycle systems. When costs for chemicals could not be estimated based on industry survey responses, the Agency obtained chemical prices from vendors or from the Chemical Marketing Reporter from December 1997 (Reference 10-4), as follows:

  — Sodium hydroxide (50 percent wet weight): $0.15 per pound,

  — Sulfuric acid (98 percent solution): $0.043 per pound,

- Sodium bisulfite (dry crystals in bags): $0.325 per pound,
- Sodium hypochlorite (100 percent, typically purchased as a 12 percent solution): $1.47 per pound,
- Polymer, generic (dry pellets in bags or 5-gallon pails): $0.20 per pound,
- Biocide: $0.004 per gallon,
- Scale inhibitor: $0.19 per pound,
- Lime (hydrated lime powder in 100 pound bags): $0.035 per pound,
- Soda ash (powder in 100-ton hopper cars): $0.05 per pound, and
- Ferric sulfate (solid in bags): $0.0705 per pound.

- ***Energy.*** Incremental energy requirements and costs associated with operation of additional pollution control equipment. In general, additional energy requirements were a result of new or upgraded high-rate recycle and treatment systems equipped with electric motors to drive water pumps, chemical mixers, aeration equipment such as blowers and compressors, and cooling tower fans. When energy costs for equipment could not be estimated based on industry survey responses, EPA obtained electricity prices from the U.S. Department of Energy's Energy Information Administration's average industrial electrical costs in 1998 (Reference 10-5). The average electrical cost to industrial users between 1994 and 1997 was $0.047 per kilowatt hour (kWh). Section 15 presents the estimated energy requirements and a more detailed discussion of the methodology used to develop these estimates for each technology option. The median electrical cost reported in industry surveys was $0.04 per kWh.

- ***Sludge/Residuals (Hazardous/Nonhazardous) Disposal.*** Cost of disposing of generated sludge. The Agency calculated incremental sludge generation rates associated with each technology option. Section 15 presents the methodology and results for this analysis. After considering sludge generation rates, sludge disposal destinations, and sludge disposal costs, the Agency determined that the incremental cost associated with sludge disposal for any technology option would be impacted by less than 0.5 percent. Therefore, EPA has not included costs associated with sludge disposal in cost estimates, except for incremental costs associated with sludge disposal for technology options PSES-3 and PSES-4 of the by-product recovery cokemaking segment of the cokemaking subcategory.

The Agency calculated site-specific sludge disposal costs for these technology options because several sites would generate and dispose of sludge associated with biological treatment, where no sludge of this nature was previously generated at the sites.

- ***Sampling/Monitoring.*** Incremental sampling and monitoring costs to determine compliance with permits or performance of treatment systems. Because of the operational complexity associated with breakpoint chlorination, biological treatment, and cyanide precipitation, the Agency estimated additional costs to sample and monitor treatment performance. The basis for these costs are provided in Section 14.5 of the Iron and Steel Administrative Record, DCN IS10825. EPA also estimated additional compliance sampling and monitoring costs for 2,3,7,8-tetrachlorodibenzofuran, which is not currently regulated under 40 CFR 420, at sinter plants because of the significant costs associated with these analyses. These costs were estimated to be $12,000 per year per site based on analyses using EPA Method 1613B at a monitoring frequency of once per month. The Agency did not incorporate monitoring cost savings realized at cokemaking sites attributable to the elimination of benzene as a regulated pollutant for BAT limits. EPA did not include in its analysis additional costs incurred by existing indirect discharge sites to monitor for naphthalene (which typically occurs monthly at an estimated cost of $1,500); however, this additional cost is offset by a monitoring cost savings realized through the elimination of total phenolics (4AAP) as a regulated pollutant for PSES. Monitoring frequency requirements for total phenolics are typically once per week and are estimated to cost approximately $2,100 annually per site. For the direct-reduced ironmaking and forging segments of the other operations subcategory, EPA did not incorporate additional monitoring costs for analyses for total suspended solids and oil and grease because of the low costs associated with these analyses and because most sites in this subcategory currently monitor for these pollutants.

Table 10-16 presents the equations used to calculate incremental operating and maintenance costs for additional treatment equipment, along with the range for which the equations are applicable. The table footnotes listed on the last page of Table 10-16 provide information sources and/or assumptions used in developing the cost equations. A more detailed description of the development of these costs for each equipment item is provided in Section 14.5 of the Iron and Steel Administrative Record, DCN IS10825.

10.1.3 One-Time Costs

One-time costs are non-capital costs that cannot be depreciated because they are not associated with property that can deteriorate or wear out. For tax purposes, a one-time non-capital cost is expensed in its entirety in the year it is incurred. When estimating costs for the

industry to comply with the regulatory options considered for this rulemaking, EPA incorporated one-time costs into cost analyses in instances described below.

When assessing costs for technology options consisting of biological treatment for the cokemaking subcategory and chemical precipitation for the steel finishing subcategory, EPA found that analytical data from some survey responses showed that, despite having treatment equipment equivalent to a technology option, PNFs or effluent concentrations of certain facilities exceeded model values. In such cases, the Agency evaluated pollution control system design and operating parameters to determine additional investment and operating and maintenance costs necessary to achieve the model PNFs and LTAs. If a site's design and operating parameters were not equivalent to model operating parameters or if these parameters were not provided in a site's survey response, the Agency allocated a one-time cost for hiring an outside consultant to upgrade wastewater treatment system performance (e.g., improve site operation and maintenance to optimize biological treatment system performance) in addition to capital and operating and maintenance costs associated with this upgrade.

Optimizing the performance of a biological treatment system at cokemaking sites requires an extensive analysis of both operating parameters and treatment chemistry. This type of an analysis usually requires an engineering consultant spending one to two weeks on site as well collecting daily data on influent and effluent concentrations, alkalinity, sludge wasting rates, mixed liquor volatile solids concentrations in the aeration basin, nutrient additions, temperature, and dissolved oxygen requirements for up to 28 days at the facility. Based on the data collected from this analysis, the consultant can recommend operational and/or design changes that will improve the system performance. Once the changes suggested by the consultant have been made, it may take several weeks to several months for the system to stabilize enough to verify that it can achieve the target effluent quality. EPA estimated consultant costs to range between $80,000 and $100,000 for sample collection, data analysis, engineering design and operational changes, and measuring the impact of the operational and design changes on system performance. Such an analysis may result in one or many modifications to the treatment system. For the purpose of estimating costs, EPA selected design and operational modifications related to four treatment system parameters for sites with biological treatment systems that do not achieve model treatment performance: aeration capacity, alkalinity, nutrient addition, and system control. Additional information on these parameters and the basis for the one-time, capital, and operating and maintenance costs associated with these modifications are located in Section 14.5 of the Iron and Steel Administrative Record, DCN IS10825.

Optimizing the performance of a chemical precipitation treatment system at a steel finishing site typically requires an extensive analysis of both operating parameters and treatment chemistry by a trained engineering consultant. The consultant uses bench-scale jar testing as a tool to optimize treatment system performance. Jar testing involves adding various chemical precipitants and polymers to small amounts of a representative wastewater to determine which most reduces overall effluent metals and suspended solids concentrations. Tests at various pHs and chemical dosages are also conducted. Jar testing is usually conducted at an off-site laboratory by trained chemists. Typical costs consist of sample collection, jar testing, laboratory analyses of lead and zinc, and preparation of a treatability report by the laboratory. In addition to

jar testing costs, the consultant may spend one to three weeks on site collecting daily data on influent and effluent concentrations, chemical additions, pH variations, and wastewater flow patterns. Based on the data collected from the on-site analysis, coupled with the jar testing results, the consultant can recommend design and/or operational changes to improve the performance of the system. EPA estimated the total consultant cost in this case to be $40,000 to $65,000. This estimate is based on the following : a maximum of 450 hours of direct labor (180 hours of field work, 270 hours of office work) at a labor rate of $100 per hour; approximately $5,000 for airfare, food, lodging, car rental, and other direct costs (equipment rental, analytical costs, telephone costs); $10,000 for preparation of a treatability report based on jar testing and analyses; and $5,000 for miscellaneous expenses. For the purpose of estimating costs for sites with chemical precipitation systems that do not achieve model treatment performance, EPA also assumed an additional annual cost equal to 15 percent of sites' existing annual costs to account for design and operational modifications to polymer feed and pH control systems. EPA did not develop more detailed cost estimates for these instances because these refinements would not impact the Agency's final action for the steel finishing subcategory.

For the steel finishing subcategory, EPA also estimated one-time costs associated with lost revenue for down time during installation of countercurrent rinse tanks for steel finishing lines. Based on industry comments, the Agency assumed lost line revenue of approximately $900,000 per line. This estimate is based on a down time of 21 days for tank installation, an average of $448/ton of cold rolled coil sheet steel, and a median production rate of 95 tons/day per line (Reference 10-6).

For technology options incorporating high-rate recycle in the ironmaking, integrated steelmaking, integrated and stand-alone hot forming, and non-integrated steelmaking and hot forming subcategories, EPA evaluated PNFs and recycle technology in place to determine whether a site required investment and operating and maintenance costs for flow reduction to achieve the model effluent pollutant loadings. The Agency found several instances where facilities have installed high-rate recycle systems, but the discharge flow rates exceeded the model PNFs. If the system was equipped with excess capacity to recirculate the incremental flow necessary to achieve the model PNF, EPA did not assign an investment cost for new equipment in the main treatment and recycle circuit. In cases where the increase in recycle rate was minimal with respect to the total recirculating flow rate, EPA assigned a one-time cost for consultant and mill services to evaluate the treatment and recycle system and to modify water management practices and operations to achieve the model PNF. If the treatment and recycle system lacked sufficient hydraulic capacity to recirculate the incremental flow necessary to achieve the model discharge flow rate, EPA sized and costed additional process water treatment and recycle equipment for the main treatment and recycle circuit.

The Agency assumed that the one-time costs for flow reduction would include relatively minor costs associated with controlling makeup water flow rates and eliminating sources of extraneous water and did not assign incremental operation and maintenance costs. The Agency assumed the increased costs associated with modifying the recycle rate would be minimal and offset by likely savings in process water chemical treatment. In addition, EPA assumed one-time costs for minimal improvements in wastewater treatment performance or

recycle rates to be $50,000. This estimate is based on a 10-week study, comprising 400 hours of direct labor (160 hours of field work and 240 hours of office work) at a labor rate of $100 per hour; approximately $5,000 for airfare, food, lodging, car rental, and other direct costs (equipment rental, analytical costs, telephone costs); and $5,000 for miscellaneous expenses. EPA did not develop more detailed cost estimates for these instances because these refinements would not impact the Agency's final action for the subcategories with high-rate recycle as a component of a technology option.

10.2 Results

This section presents EPA's national estimates of incremental investment and operating and maintenance costs by technology option for each industry subcategory. Agency cost estimates for this rulemaking are factored estimates and are believed to be accurate within ±25 to ±30 percent (Reference 10-3). Site-specific cost estimates are documented by subcategory in Section 14.6 of the Administrative Record: by-product recovery cokemaking (DCN IS10721), sintering (DCN IS10705), ironmaking (DCN IS10717), integrated steelmaking (IS10694), integrated and stand-alone hot forming (DCN IS10830), non-integrated steelmaking and hot forming (DCN IS10697), steel finishing (DCN IS10702), and other operations (DCN IS10706).

10.2.1 Cokemaking Subcategory - By-Product Recovery and Non-Recovery Segments

The Agency estimated the cost impacts for a total of four BAT and PSES technology options for 20 by-product recovery cokemaking sites in the United States that discharge wastewater. Of these 20 sites, 12 are direct dischargers and 8 are indirect dischargers. The table below summarizes the technology options evaluated after proposal. To incorporate comments submitted in response to the proposed rule, EPA revised cost estimates associated with the BAT-1, BAT-3, PSES-1, and PSES-3 technology options to account for costs associated with installing free and fixed ammonia distillation systems and minimizing and reducing extraneous flows, when applicable. The Agency revised cost estimates for BAT-3 to incorporate costs to install and operate multimedia filtration following breakpoint chlorination, which is consistent with the treatment configuration of the site operating this technology. EPA did not further consider technology options BAT-2, BAT-4, PSES-2, and PSES-4 after proposal, as discussed in Section 9. Therefore, the Agency did not revise cost estimates for these options and cost estimates for options BAT-1, BAT-3, PSES-1, and PSES-3 are presented in Table 10-17.

Technology Options for By-Product Recovery Segment

Treatment Unit	BAT-1	BAT-3	PSES-1	PSES-3
Tar/oil removal	✔	✔	✔	✔
Equalization/ammonia still feed tank	✔	✔	✔	✔
Free and fixed ammonia still	✔	✔	✔	✔
Temperature control	✔	✔		✔
Equalization tank	✔	✔	✔	✔

Treatment Unit	BAT-1	BAT-3	PSES-1	PSES-3
Biological treatment with secondary clarification	✔	✔		✔
Sludge dewatering	✔	✔		✔
Breakpoint chlorination (2-stage)		✔		
Multimedia filtration		✔		

BAT-1

EPA analyzed long-term average effluent data, treatment system flow rates, and wastewater treatment operating parameters provided in industry survey responses from all 13 direct dischargers. The Agency estimated that:

- One site would install additional aeration capacity for biological treatment in order to achieve the model treatment concentration for ammonia as nitrogen. Based on operating and design parameters reported by this site, the Agency concluded that the current operating hydraulic retention time (HRT) and solids retention time (SRT) at this site are insufficient to consistently achieve the model pollutant loadings. Consequently, the Agency estimated investment costs for additional biological treatment basin capacity required to achieve a 50-hour HRT and an SRT of 100 days, which are based on industry survey responses from by-product recovery cokemaking sites with model treatment and performance. EPA also estimated that this site would replace an existing free and fixed ammonia distillation system and install an equalization tank ahead of the ammonia stills to minimize influent and effluent variability for ammonia as nitrogen.

- Three sites would upgrade and optimize existing biological treatment systems.

- One site would install a free ammonia distillation system.

- Two sites would install additional biological treatment filters and operate existing ammonia stills at a lower operating pH, possibly requiring relocation of the sodium hydroxide injection point.

- One site would upgrade and optimize an existing biological treatment system, reroute benzol plant wastewaters to an existing equalization tank, and install a free and fixed ammonia distillation system.

- One site would install a tar removal system, heat exchanger, biological treatment equalization tank, a final cooler to reduce noncontact cooling water to biological treatment, a new sewer to route only ammonia still effluent and control water to biological treatment, and a spare pump for coke quench water return to eliminate runoff to biological treatment in the

event of primary pump failure or maintenance. This site would also upgrade controls on an existing ammonia distillation system, increase the frequency of biological treatment monitoring, and replace a boiler water preheater to eliminate a leak of boiler water to the process water collection system.

- One site would install biological treatment equalization tanks.

- One site does not operate biological treatment following ammonia distillation. Instead, this site operates an ammonia still followed by a dephenolization system, sand filtration, and granular activated carbon filtration. The Agency assumed that this site would install an ammonia distillation equalization tank and biological treatment equalization tank, demolish an old blast furnace area to accommodate installation of a biological treatment system to replace an existing physical chemical treatment system, and replace direct cooling of hot oil decanter with an indirect heat exchanger to reduce the discharge flow rate. Although these improvements would require a significant investment, the Agency estimated that this site would realize annual operating and maintenance cost savings.

- Two sites would not incur any costs.

BAT-3

In addition to the costs associated with BAT-1, EPA estimated that all 13 direct dischargers would install breakpoint chlorination systems in order to achieve BAT-3 model effluent pollutant loadings. The Agency estimated that nine of these sites would also install multimedia filtration systems. EPA revised cost estimates associated with breakpoint chlorination systems to incorporate comments submitted in response to the proposed rule. EPA included costs for a sodium hypochlorite delivery and feed system, as well as costs to comply with Uniform Fire Code standards, to account for safety considerations of chlorination systems. The Agency also incorporated additional costs for insulation, heat tracing, air dryers, an extra 200 feet of piping, a sodium bisulfite storage tank, and software for process control and instrumentation. Table 10-5 presents the revised cost estimates.

PSES-1

Of the eight indirect dischargers, two use ammonia stills followed by biological treatment (conventional activated sludge systems) and one uses biological treatment (sequencing batch reactors) followed by air stripping. Two sites operate an ammonia still followed by cyanide precipitation; one of these sites also operates a sand filtration system following cyanide precipitation. The remaining three sites operate an ammonia still. Two of the eight sites discharge to POTWs with nitrification capability and would therefore qualify for a waiver for ammonia as nitrogen limits. The Agency estimated that:

- One site would install an equalization tank following an existing ammonia distillation system and incur costs for additional steam and caustic;
- One site would incur costs to minimize non-process wastewater infiltration and wastewater generated from crude light oil recovery operations;
- One site would install an equalization tank and a free and fixed ammonia distillation system;
- One site would install an equalization tank prior to an existing ammonia distillation system and incur costs to eliminate non-process water infiltration;
- One site would install equalization tanks prior to and after ammonia stills and incur costs for additional steam and caustic;
- One site would optimize and upgrade an existing biological treatment system instead of installing a new ammonia distillation system to reduce effluent ammonia loadings; and
- Two sites would not incur any costs.

PSES-3

The Agency estimated that five sites would install biological treatment systems in order to comply with PSES-3. The Agency estimated investment costs of installing biological treatment systems designed and operated based on a 50-hour HRT and an SRT of 100 days, along with associated equalization, clarification and sludge handling systems. EPA also estimated that three sites with existing biological treatment would incur a one-time cost in order to improve system performance.

Non-Recovery Segment

The Agency is aware of one non-recovery cokemaking plant that operated in 1997. This site does not discharge process wastewater and would therefore not incur any costs in order to comply with this rule.

10.2.2 Ironmaking and Sintering Subcategories

Of the 20 integrated sites in the United States, 9 discharge only blast furnace wastewater and 3 discharge commingled blast furnace and sintering wastewater. The Agency is also aware of one stand-alone sinter plant that operated in 1997 and discharged wastewater. Of the 14 sites that discharge blast furnace or sinter plant wastewater, 9 operate dedicated blast furnace treatment systems (one is an indirect discharger), 3 operate combined sintering and blast

furnace treatment systems, 1 cotreats wastewater from sintering, blast furnace, and other iron and steel manufacturing processes, and 1 operates a dedicated sinter plant treatment system.

EPA performed two separate costing analyses for the ironmaking and sintering subcategories. The first analysis was similar to that performed by EPA for the proposed rule, where sintering was a segment within the ironmaking subcategory. The second analysis was based on developing revised limitations within the existing regulatory structure, which includes sintering as a separate subcategory. These two analyses are described below.

Ironmaking Subcategory

The table below summarizes the technology options for treatment of blast furnace and sintering wastewater, whether cotreated or treated separately. The BAT-1 option consists of multimedia filtration to remove dioxin/furans and is discussed in Section 9.2. Under this option, sites would have to monitor for 2,3,7,8-tetrachlorodibenzofuran (TCDF) at a point prior to commingling with wastewater from any non-sintering or non-blast-furnace operations, with the exception that facilities may commingle ancillary non-blast-furnace wastewater (comprising 5 percent of total flow or less) with sintering wastewater. For the purpose of this analysis, EPA continued to use the proposed subcategorization in which ironmaking and sintering operations were combined into a single subcategory with different segments. Agency cost estimates for these options are discussed in the subsections below and presented in Table 10-18.

Technology Options for Ironmaking Subcategory

Treatment Unit	BAT-1	PSES-1
Clarifier	✔	✔
Sludge dewatering	✔	✔
Cooling tower (blast furnace only)	✔	✔
High-rate recycle	✔	✔
Blowdown treatment		
Metals precipitation	✔	✔
Breakpoint chlorination (2-stage)	✔	
Multimedia filtration	✔	

BAT-1/PSES-1

EPA evaluated industry survey responses from 13 direct dischargers and 1 indirect discharger. EPA revised cost estimates for these technology options to incorporate comments submitted in response to the proposed rule. The Agency determined necessary equipment modifications without assuming that facilities would reapply for and be granted 301(g) variances during permit renewal. EPA also revised cost estimates associated with breakpoint chlorination to incorporate costs for a sodium hypochlorite delivery and feed system as well as costs to

comply with Uniform Fire Code standards to account for safety considerations of chlorination systems. The Agency also incorporated additional costs for insulation, heat tracing, air dryers, an extra 200 feet of piping, a sodium bisulfite storage tank, and software for process control and instrumentation. Table 10-9 presents the revised cost estimates for breakpoint chlorination. For the sites evaluated for options BAT-1 and PSES-1 (13 direct discharge sites were evaluated for BAT-1 and one indirect discharge site was evaluated for PSES-1), the Agency estimated that:

- Two sites with existing once-through treatment systems would install high-rate recycle systems to achieve the model PNF. In addition, EPA estimated that one of these sites would install a blowdown treatment system comprising metals precipitation, solids handling, breakpoint chlorination, and multimedia filtration, while the other site would install a blowdown treatment system comprising metals precipitation, solids handling, and multimedia filtration. To estimate the investment costs for high-rate recycle systems, the Agency used an engineering and design firm (independent of the electronic cost model) for each site.

- One site would install a blowdown multimedia filtration system.

- One site would install two breakpoint chlorination systems for two separate treatment systems and also incur one-time costs to increase recycle rates.

- One sites would incur a one-time cost to modify operating practices and incur additional annual operating and maintenance costs.

- Four sites would install a blowdown treatment system comprising metals precipitation, solids handling, breakpoint chlorination, and multimedia filtration; one of these sites would also install an additional cooling tower, piping, and pump station to increase recycle, while another of these sites would also incur a one-time cost to increase recycle.

- One site would install a blowdown treatment system comprising breakpoint chlorination and multimedia filtration.

- One site would install a blowdown treatment system comprising breakpoint chlorination and multimedia filtration and incur a one-time cost increase recycle.

- Two sites would install a blowdown treatment system comprising breakpoint chlorination and multimedia filtration and install an additional cooling tower, piping, and pump station to increase recycle.

Sintering Subcategory

For the sintering subcategory, EPA evaluated revising the current regulation to add limitations and standards for one additional pollutant, 2,3,7,8-TCDF, while keeping the rest of the limits unchanged. For this analysis, EPA considered a technology basis composed of multimedia filtration to remove chlorinated dioxin and furan congeners from sintering wastewater, prior to commingling sintering wastewater with wastewater from any non-sintering or non-blast-furnace operations (with the exception that facilities may commingle ancillary non-blast-furnace wastewater comprising 5 percent of the total flow or less). EPA evaluated industry survey responses from five direct dischargers; EPA identified no indirect discharging sintering facilities.

To incorporate comments submitted in response to the proposed rule, the Agency revised its cost estimates for multimedia filtration systems to include costs for insulation, heat tracing, an extra 200 feet of piping, and software for process control and instrumentation. Table 10-13 presents the revised costs for multimedia filtration systems. For this analysis, EPA estimates that four sites would install a multimedia filtration system and solids handling system and one site would install a chemical precipitation system, solids handling system, and multimedia filtration system.

10.2.3 Integrated Steelmaking Subcategory

According to industry survey responses, there are 20 integrated sites with basic oxygen furnaces (BOFs) and continuous casting operations. Thirteen of these sites have vacuum degassing operations. The Agency is also aware of one non-integrated site that operates a BOF. EPA estimated incremental costs for these 21 sites. The table below summarizes the technology options for control of treatment of wastewater from BOF, vacuum degassing, and continuous casting operations, whether cotreated or treated separately. Agency cost estimates for these options are discussed in the subsection below and presented in Table 10-19.

Technology Options for Integrated Steelmaking Subcategory

Treatment Unit	BAT-1	PSES-1
Classifier (BOF only)	✔	✔
Scale pit with oil skimming (continuous casting only)	✔	✔
Carbon dioxide injection (wet-suppressed and wet-open combustion BOFs only)	✔	✔
Clarifier	✔	✔
Sludge dewatering	✔	✔
Multimedia filtration (a) (continuous casting only)	✔	✔

Treatment Unit	BAT-1	PSES-1
Cooling tower (vacuum degassing and continuous casting)	✔	✔
High-rate recycle	✔	✔
Blowdown treatment		
Metals precipitation	✔	✔

(a) May be used in recycle circuit or as blowdown treatment.

BAT-1/PSES-1

The Agency estimated that 16 of the 21 sites would install a total of 25 blowdown metals precipitation systems to achieve BAT-1/PSES-1 model Pollutant loadings. Based on industry comments, EPA revised metals precipitation costs to include an equalization tank with a mixer, a rapid mix tank, a flocculation tank, conventional clarifiers, and software/process control costs in lieu of an equalization tank followed by a reactor clarifier with sodium hydroxide and polymer feed systems. EPA estimated that four treatment systems at four sites would not incur any costs.

In addition to the costs discussed above, the Agency estimated that:

- Seven sites would install a total of eight carbon dioxide injection systems to increase recycle rates for wet-suppressed or wet-open combustion BOF recycle systems;
- Three sites would install additional piping and pump stations to increase recycle rates of four recycle systems;
- Eight sites would install additional cooling towers, piping, and pump stations to increase recycle rates for nine recycle systems;
- Seven sites would incur one-time costs to increase recycle rates of seven recycle systems by an average of 1.5 percent;
- One site would install a high-rate recycle system to replace a once-through treatment system (the engineering and design firm prepared a cost estimate for this site independently of the cost model); and
- One site would incur costs to eliminate various noncontact cooling water leaks into existing treatment systems (the site provided a cost estimate).

Note that multiple cost items summarized above may apply to one site. Therefore, the sum of the sites from each bullet does not equal the total number of sites evaluated for this option.

10.2.4 Integrated and Stand-Alone Hot Forming Subcategory

The Agency estimated that 44 carbon steel integrated and stand-alone hot forming sites discharge wastewater to surface waters in the United States and 6 sites discharge wastewater to POTWs. EPA estimated that the three integrated and stand-alone hot forming sites that manufacture stainless steel products are indirect dischargers. No survey respondent with stainless steel hot forming operations reported directly discharging wastewater.

The table below summarizes the technology options evaluated for the carbon and alloy steel and stainless steel segments of this subcategory. Agency cost estimates for these options are discussed in the subsections below and presented in Table 10-20.

Technology Options for Integrated and Stand-Alone Hot Forming Subcategory

Treatment Unit	BAT-1	PSES-1
Scale pit with oil skimming	✔	✔
Roughing clarifier with oil removal	✔	✔
Sludge dewatering	✔	✔
Multimedia filtration (a)	✔	✔
High-rate recycle	✔	✔
Blowdown treatment		
Multimedia filtration (a)	✔	✔

(a) May be used in recycle circuit or as blowdown treatment.

BAT-1 (Carbon and Alloy Steel Segment)

The Agency estimated that 13 of the 44 sites would install a total of 14 high-rate recycle systems to replace existing partial recycle or once-through treatment systems. The Agency used an engineering and design firm to estimate investment costs (independently of the cost model) to install 12 high-rate recycle systems. One of these estimates included costs to segregate hot forming and finishing wastewater that was cotreated in an end-of-pipe system. The Agency distributed costs associated with this modification to the integrated and stand-alone hot forming subcategory and steel finishing subcategory according to the relative percentage of wastewater flow reported by this site from both subcategories. The Agency used cost estimates submitted in response to the proposed rule to estimate investment costs to install the other two high-rate recycle treatment systems.

In addition to the wastewater treatment modifications mentioned above, the Agency also estimated that:

- Six sites would install blowdown multimedia filtration systems;

- Seven sites would install blowdown multimedia filtration systems, cooling towers, pump stations, and piping;
- Three sites would install a total of five blowdown multimedia filtration systems and would incur one-time costs for flow reduction;
- Six sites would install cooling towers, pump stations, and piping; and
- Twelve treatment systems at a total of 12 sites would not incur any costs to comply with BAT-1.

Note that multiple cost items summarized above may apply to one site. Therefore, the sum of the sites from each bullet does not equal the total number of sites evaluated for this option. The Agency estimated that 12 of the sites mentioned above would install multimedia filtration systems to treat blowdown flow rates less than 50 gallons per minute (gpm). Based on vendor information obtained for small-scale multimedia filtration systems, the Agency estimated an investment cost of $200,000 would be required to purchase and install each of these systems.

PSES-1 (Carbon and Alloy Steel Segment)

Of the six indirect discharging carbon steel integrated and stand-alone hot forming sites, the Agency estimated that two sites would install blowdown filtration systems to treat flow rates less than 50 gpm and incur a one-time cost for flow reduction. EPA estimated that four sites would not incur any costs to comply with PSES-1.

PSES-1 (Stainless Steel Segment)

Of the three indirect discharging stainless steel sites, the Agency estimated that two sites would install blowdown filtration systems and one site would incur a one-time cost for flow reduction.

10.2.5 Non-Integrated Steelmaking and Hot Forming Subcategory

The Agency estimated that 40 carbon steel mini-mills discharge wastewater from vacuum degassing, continuous casting, or hot forming operations, whether cotreated or treated separately, to surface waters of the United States and 16 discharge wastewater from these operations to POTWs. The Agency also estimated that four stainless steel mini-mills discharge wastewater from vacuum degassing, continuous casting, or hot forming operations, whether cotreated or treated separately, to surface waters of the United States and five discharge wastewater from these operations to POTWs.

The table below summarizes the technology options evaluated for the carbon and alloy steel and stainless steel segments of this subcategory. Agency cost estimates for these options are discussed in the subsections below and presented in Table 10-21.

Technology Options for Non-Integrated Steelmaking and Hot Forming Subcategory

Treatment Unit	BAT-1	PSES-1
Scale pit with oil skimming (continuous casting and hot forming only)	✔	✔
Clarifier	✔	✔
Sludge dewatering	✔	✔
Cooling tower	✔	✔
Multimedia filtration (a)	✔	✔
High-rate recycle	✔	✔
Blowdown treatment		
Metals precipitation (a)		
Multimedia filtration (a)	✔	✔

(a) May be used in recycle circuit or as blowdown treatment.

BAT-1 (Carbon and Alloy Steel Segment)

The Agency estimated that two sites would replace existing once-through treatment systems with high-rate recycle systems. An engineering and design firm prepared cost estimates for these sites independently of the cost model. EPA also estimated that:

- Twelve sites would install a total of 17 blowdown multimedia filtration systems;
- Four sites would install blowdown multimedia filtration systems, cooling towers, pump stations, and piping and incur one-time costs;
- Two sites would install blowdown multimedia filtration systems and incur one-time costs for flow reduction;
- Eight sites would install cooling towers, pump stations, and piping for a total of 13 recycle systems;
- Four sites would install cooling towers, pump stations, and piping for a total of five recycle systems and incur one-time costs; and
- Thirteen sites would incur one-time costs for flow reduction at 22 recycle systems.

EPA estimated that all of the multimedia filtration systems mentioned above would treat less than 50 gpm of wastewater. The Agency believes that 14 treatment systems at a total of 13 sites would not incur any costs to comply with BAT-1. Note that multiple cost items summarized above may apply to one site. Therefore, the sum of the sites from each bullet does not equal the total number of sites evaluated for this option.

PSES-1 (Carbon and Alloy Steel Segment)

The Agency estimated that two sites would install a blowdown multimedia filtration system; one site would install a blowdown multimedia filtration system and a cooling tower, pump station, and piping and incur one-time costs; six sites would install blowdown multimedia filtration systems and incur one-time costs; and three sites would install cooling towers, pump stations, and piping. EPA estimated that seven of the multimedia filtration systems mentioned would treat less than 50 gpm of wastewater. The Agency believes that 11 treatment systems at a total of 10 sites would not incur any costs to comply with PSES-1. Note that multiple cost items summarized above may apply to one site. Therefore, the sum of the sites from each bullet does not equal the total number of sites evaluated for this option.

BAT-1 (Stainless Steel Segment)

EPA estimated that one site would replace an existing once-through treatment system with a high-rate recycle system. An engineering and design firm prepared a cost estimate for this site independently of the cost model. The Agency also estimated that one site would install separate two multimedia filtration systems to treat less than 50 gpm of wastewater and incur one-time costs, one site would incur one-time costs for flow reduction, and one site would not incur any costs to comply with BAT-1.

PSES-1 (Stainless Steel Segment)

The Agency estimated that one site would install two multimedia filtration systems at two separate treatment systems to treat less than 50 gpm of wastewater and incur one-time costs, two sites would install cooling towers, pump stations, and piping, and two sites would not incur any costs to comply with PSES-1.

10.2.6 Steel Finishing Subcategory

The Agency estimated that 51 carbon steel and 19 stainless steel finishing mills discharge wastewater to surface waters in the United States and 31 carbon steel and 14 stainless steel finishing mills discharge wastewater to POTWs.

The table below summarizes the technology options evaluated for the carbon and alloy steel and stainless steel segments. Comments submitted in response to the proposed rule provided information to the Agency on the efficiency and performance of acid purification technology, which indicated EPA substantially overestimated the capability of acid purification units (APUs) in the proposed rule. Therefore, EPA also estimated costs and pollutant removals

without APUs as a component of the technology option. Estimates excluding APUs as a technology option component resulted in substantially higher costs with lower pollutant removals than those estimated at proposal.

Technology Options for Steel Finishing Subcategory

Treatment Unit	BAT-1	PSES-1
In-Process Controls		
Countercurrent rinses	✔	✔
Recycle of fume scrubber water	✔	✔
Wastewater Treatment		
Oil removal	✔	✔
Hydraulic and waste loading equalization	✔	✔
Hexavalent chromium reduction	✔	✔
Metals precipitation	✔	✔
Clarification	✔	✔
Sludge dewatering	✔	✔

The Agency evaluated PNFs from manufacturing lines at each site for comparison with model PNFs. For lines with PNFs within 25 percent of the model PNF, EPA allocated a one-time cost to sites to achieve model PNFs. The Agency assumed relatively minor costs are associated with controlling rinse water flow rates to achieve these flow reductions and would be included in the one-time cost.

For manufacturing lines with PNFs greater than 25 percent, the Agency estimated costs to install countercurrent rinse tanks at $150,000 per line. This estimate is based on installation of an additional 10,000-gallon rinse tank with associated pumps and blowers for bath agitation. Furthermore, EPA did not assign incremental operating and maintenance costs for installation of countercurrent rinse tanks. The Agency assumed that operating and maintenance costs incurred because of installation of these tanks would be minimal and offset by likely savings in rinse water usage and process water chemical treatment. Comments submitted in response to the proposed rule indicated that these costs would vary greatly with each site, depending on the presence of adequate space on process lines for additional tanks, and that down time associated with such process modifications would be significantly more that EPA estimated at proposal. In response to this comment, EPA revised its cost estimates associated with the installation of countercurrent rinse tanks to include a one-time cost of $900,000 per line for lost line revenue.

EPA did not modify the methodology discussed above further because these modifications would not impact the Agency's final action for the steel finishing subcategory. In response to comments received on the proposed rule regarding infeasibility of model PNFs because of product quality concerns, EPA did evaluate possible concentration-based effluent limitations for this subcategory. However, pollutant removals associated with this evaluation were too small to justify the projected costs. Agency cost estimates for the evaluated technology options, except for the consideration of concentration-based limitations, are discussed in the subsections below and presented in Table 10-22.

BAT-1 (Carbon and Alloy Steel Segment)

Based on industry survey responses, EPA estimated that six sites would incur a one-time cost to optimize existing metals precipitation systems. The Agency assumed a 15-percent increase in annual operating and maintenance costs for these sites. EPA estimated that four sites would require wastewater treatment modifications and incur flow reduction costs. The Agency also costed one site to segregate hot forming and finishing wastewater that was cotreated in an end-of-pipe system. The Agency used an engineering and design firm to estimate this cost. This estimate was prepared independently of the cost model. EPA distributed costs associated with this modification to the integrated and stand-alone hot forming subcategory and steel finishing subcategory according to the relative percentage of wastewater flow reported by this site from both subcategories.

In addition to the in-process control and wastewater treatment modifications mentioned above, the Agency also estimated that:

- Three sites would install countercurrent rinse tanks on a single line;
- Seven sites would install countercurrent rinse tanks and incur a one-time cost for flow reduction;
- Nine would incur one-time costs to achieve model PNFs; and
- Twenty-one sites would not incur any costs to comply with BAT-1.

PSES-1 (Carbon and Alloy Steel Segment)

The Agency estimated that six sites would require wastewater treatment modifications to achieve model effluent pollutant loadings. EPA estimated costs for five of these sites to install metals precipitation systems, clarifiers, and associated sludge handling systems and for the other site to install a clarifier.

In addition to the wastewater treatment modifications mentioned above, the Agency also estimated that:

- Five sites would incur a one-time cost for flow reduction on a single line;

- Two sites would install a countercurrent rinse tank on a single line;
- One site would install a countercurrent rinse tank on a single line, incur a one-time cost, and incur a 15-percent increase in annual operating and maintenance costs to optimize existing metals precipitation systems;
- One site would install countercurrent rinse tanks on multiple lines; and
- Sixteen sites would not incur costs to comply with PSES-1.

BAT-1 (Stainless Steel Segment)

The Agency estimated that two sites would incur a one-time cost for flow reduction for a single line. In addition to these in-process modifications, the Agency also estimated that:

- Six sites would install countercurrent rinse tanks on multiple lines and incur a one-time cost for flow reduction;
- Eight sites would install countercurrent rinse tanks on multiple lines and incur a one-time cost and a 15-percent increase in annual operating and maintenance costs to optimize existing metals precipitation systems; and
- Three sites would not incur costs to comply with BAT-1.

PSES-1 (Stainless Steel Segment)

The Agency estimated that three sites would incur one-time costs, a 15-percent increase in annual operating and maintenance costs to optimize existing metals precipitation systems, and additional costs for flow reduction. In addition, the Agency estimates that:

- Two sites would incur a one-time cost and a 15-percent increase in annual operating and maintenance costs to optimize existing metals precipitation systems;
- One site would incur one-time costs for flow reduction; and
- Eight sites would not incur costs to comply with PSES-1.

10.2.7 Other Operations Subcategory

Direct-Reduced Ironmaking (DRI) Segment

The table below presents the BPT technology option evaluated for this segment. EPA is not discussing or presenting cost estimates because data aggregation or other masking

techniques are insufficient to protect confidential business information. The Agency evaluated effluent total suspended solids concentrations reported by sites, PNFs, and technology in place to determine appropriate costs to achieve model pollutant loadings.

Technology Options for DRI Segment

Treatment Unit	BPT
Classifier	✔
Clarifier	✔
Sludge dewatering	✔
Cooling tower	✔
High-rate recycle	✔
Blowdown treatment	
Multimedia filtration	✔

Forging Segment

Of the eight direct discharging forging operations and four indirect discharging forging operations, the Agency estimated that two sites would install a blowdown multimedia filtration system and incur a one-time cost to achieve the model loadings and two sites would install a blowdown multimedia filtration system. The Agency also estimated that four sites would not incur costs to comply with BPT. EPA assigned a one-time cost of $20,000 for consultant and mill services to evaluate how to modify contact water management practices to achieve the model PNF for forging. Forging operations at iron and steel sites are small-scale operations that range in production from 500 to 90,000 tons of steel per year. Sites estimated to incur a one-time cost forge well below 20,000 tons of steel per year. Consequently, the Agency's estimate is based on a short-term study, consisting of 150 hours of direct labor (50 hours of field work and 100 hours of office work) at a labor rate of $100 per hour. The Agency also estimated approximately $2,500 for airfare, food, lodging, and other direct costs (equipment rental, analytical costs, telephone costs) and $2,500 for miscellaneous expenses. Table 10-23 presents Agency cost estimates for the BPT option.

Technology Options for Forging Segment

Treatment Unit	BPT
High-rate recycle	✔
Blowdown treatment	
Oil/water separator	✔
Multimedia filtration	✔

Briquetting Segment

The Agency is aware of four sites with briquetting operations active in 1997. These sites do not discharge process wastewater and would therefore not incur any costs in order to comply with this rule.

10.3 References

10-1 U.S. Environmental Protection Agency. Economic Analysis of the Final Effluent Limitations Guidelines and Standards for the Iron and Steel Manufacturing Point Source Category. EPA 821-R-02-006, Washington, DC, April 2002.

10-2 U.S. Department of Labor, Monthly Labor Review. Washington, DC, 1997.

10-3 Perry, R. and Green, D. Perry's Chemical Engineer's Handbook, Sixth Edition. McGraw-Hill, Inc., 1984.

10-4 Chemical Market Reporter. Schnell Publishing Company, December 1997.

10-5 U.S. Department of Energy. Electric Power Annual 1998. Volume I. Washington, DC, 1998.

10-6 U.S. Department of Commerce. Current Industrial Reports, Steel Mill Products - 1997. MA33B, September 1998.

Table 10-1

Assumptions Used to Develop Cost Estimates in Tables 10-2 through 10-13

Category	Assumption
Spatial limitations	Additions to the wastewater treatment system will be located within 500 feet of the existing system.
	An approximate length of 500 feet is used for the supply of water to the new water treatment facility.
	Equipment is located so that the length between processing tanks, sumps, and processing equipment will be within 20 feet.
	Outfalls or sewers leading to outfalls are located within 300 feet of the exit of the new water treatment facility.
	Motors are located within 150 feet from motor control center, 160 feet of conduit per motor, 260 feet of control cable per motor.
Solids handling	Sludge or filter backwash generated from add-on treatment systems will be thickened and dewatered with existing equipment in existing high-rate recycle systems, except for blast furnace and sintering operations, where separate sludge dewatering facilities were costed for blowdown treatment systems to segregate high zinc-content sludges from wastewater sludges that may be recycled to the blast furnaces.
Civil/structural costs	Site preparation is minimal; no major demolition, excavation of existing foundations or movement of railroad tracks.
	Soil conditions are such that no piles are required.
	No excavation of hazardous materials.
Piping/installation	Blended labor rate of $60 per hour, consistent with union labor rates, for personnel performing equipment installation.
	1,000 feet of 2-inch carbon steel pipe has been included for plant air distribution. There is no allowance for an air compressor.
	Pipe has been sized to keep the water velocity less than 8 feet per second.
	2-inch nominal piping and under is priced as schedule 80 threaded carbon steel.
	Pipe over 2 inches is priced as standard schedule carbon steel pipe with welded joints.
	316 stainless steel pipe is used for chlorine, caustic, and acid piping.
	Costs for supports and painting are included.
	10% of the total cost allowed for manual valves.
Electrical/process control instrumentation	5% of the total cost allowed for instrumentation.
	Electrical and other utility services are available at the site.

Table 10-2

Design Specifications for Cokemaking Granular Activated Carbon Model Treatment Systems

Item	Type	100,000 gpd		400,000 gpd		2,700,000 gpd	
		Number	Size	Number	Size	Number	Size
Pump station 1	Vertical turbine	2 pumps	1.5 HP	2 pumps	7.5 HP	2 pumps	40 HP
Pump station 2	Vertical turbine	2 pumps	1/3 HP	2 pumps	1/3 HP	2 pumps	2 HP
Filter backwash pump	Vertical turbine	2 pumps	5 HP	2 pumps	5 HP	2 pumps	2 BHP
Equalization basin	Concrete	1	3,500 ft^3	1	13,500 ft^3	1	90,000 ft^3
Sump 1	Concrete	1	450 ft^3	1	700 ft^3	1	4,000 ft^3
Backwash surge basin	Concrete	1	450 ft^3	1	700 ft^3	1	4,000 ft^3
Activated carbon system	Filters	2	4' × 3'/ 7.5 HP	2	7' × 7'/ 7.5 HP	3	15' × 10/ 20 HP

Table 10-3

Estimated Investment Costs for Cokemaking Granular Activated Carbon Model Treatment Systems (100,000 - 2,700,000 gpd)

100,000 gpd				
Category	**Item**	**Quantity**	**Rate**	**Cost**
Major equipment	Activated carbon system	2	$80,000	$160,000
	Activated carbon	1	$5,000	$5,000
	Pump station 1	2	$1,100	$2,200
	Pump station 2	2	$2,500	$5,000
	Filter backwash pumps	2	$3,000	$6,000
	Total freight			**$5,300**
	Subtotal			**$183,500**
Installation	**Mechanical equipment installation**			
	Activated carbon system	2	$11,000	$22,000
	Pump station 1	2	$1,500	$3,000
	Pump station 2	2	$1,500	$3,000
	Filter backwash pumps	2	$2,000	$4,000
	Piping installation			
	Piping/supports	1	$58,000	$58,000
	Control valves/instrumentation	1	$10,200	$10,200
	Civil/structural (includes costs associated with site preparation and grading)			
	Equipment foundations			
	Activated carbon system	1	$27,400	$27,400
	Equalization basin	1	$66,600	$66,600
	Sump 1	1	$19,000	$19,000
	Backwash surge basin	1	$19,000	$19,000

Table 10-3 (continued)

100,000 gpd				
Installation (cont.)	**Equipment structural support**			
	Pump station 1 platform	1	$4,000	$4,000
	Pump station 2 platform	1	$2,000	$2,000
	Filter backwash pumps	1	$8,000	$8,000
	Buildings			
	Activated carbon system	1	$21,000	$21,000
	Electrical and process control			
	Power/equipment	1	$48,100	$48,100
	Control/instrumentation	1	$40,600	$40,600
	Building services	1	$4,400	$4,400
	Subtotal			**$360,300**
Indirect costs	Temporary facilities (1%)			$5,400
	Spare parts (1.5%)			$8,200
	Engineering procurement and contract management (12%)			$65,300
	Commissioning (3%)			$16,300
	Owner team (10%)			$54,400
	Subtotal			**$149,600**
Total costs	Total direct and indirect costs			$693,400
	Contingency (20%)			$138,700
	Total Project Cost			**$832,100**

400,000 gpd				
Category	**Item**	**Quantity**	**Rate**	**Cost**
Major equipment	Activated carbon system	2	$90,000	$180,000
	Activated carbon	1	$15,000	$15,000
	Pump station 1	2	$6,400	$12,800
	Pump station 2	2	$1,100	$2,200
	Filter backwash pumps	2	$6,500	$13,000
	Total freight			$6,700
	Subtotal			**$229,700**

Table 10-3 (continued)

400,000 gpd				
Category	**Item**	**Quantity**	**Rate**	**Cost**
Installation	Mechanical equipment installation			
	Activated carbon system	2	$12,000	$24,000
	Pump station 1	2	$2,000	$4,000
	Pump station 2	2	$1,500	$3,000
	Filter backwash pumps	2	$2,000	$4,000
	Piping installation			
	Piping/supports	1	$91,100	$91,100
	Control valves/instrumentation	1	$16,100	$16,100
	Civil/structural (includes costs associated with site preparation and grading)			
	Equipment foundations			
	Activated carbon system	1	$35,000	$35,000
	Equalization basin	1	$152,300	$152,300
	Sump 1	1	$22,000	$22,000
	Backwash surge basin	1	$22,000	$22,000
	Equipment structural support			
	Pump station 1 platform	1	$8,000	$8,000
	Pump station 2 platform	1	$2,000	$2,000
	Filter backwash pumps	1	$8,000	$8,000
	Buildings			
	Activated carbon system	1	$28,000	$28,000
	Electrical and process control			
	Power/equipment	1	$48,100	$48,100
	Control/instrumentation	1	$40,600	$40,600
	Building services	1	$5,800	$5,800
	Subtotal			**$514,000**
Indirect costs	Temporary facilities (1%)			$7,400
	Spare parts (1.5%)			$11,200
	Engineering procurement and contract management (12%)			$89,200
	Commissioning (3%)			$22,300
	Owner team (10%)			$74,400
	Subtotal			**$204,500**

Table 10-3 (continued)

400,000 gpd				
Category	**Item**	**Quantity**	**Rate**	**Cost**
Total costs	Total direct and indirect costs			$948,200
	Contingency (20%)			$189,600
	Total Project Cost			**$1,137,800**

2,700,000 gpd				
Category	**Item**	**Quantity**	**Rate**	**Cost**
Major equipment	Activated carbon system	3	$86,000	$258,000
	Activated carbon	1	$100,000	$100,000
	Pump station 1	2	$10,600	$21,200
	Pump station 2	2	$3,000	$6,000
	Filter backwash pumps	2	$1,500	$3,000
	Total freight			$11,600
	Subtotal			**$399,800**
Installation	**Mechanical equipment installation**			
	Activated carbon system	3	$12,000	$36,000
	Pump station 1	2	$2,500	$5,000
	Pump station 2	2	$2,000	$4,000
	Filter backwash pumps	2	$1,500	$3,000
	Piping installation			
	Piping/supports	1	$175,400	$175,400
	Control valves/instrumentation	1	$31,000	$31,000
	Civil/structural (includes costs associated with site preparation and grading)			
	Equipment foundations			
	Activated carbon system	1	$60,100	$60,100
	Equalization basin	1	$657,400	$657,400
	Sump 1	1	$59,100	$59,100
	Backwash surge basin	1	$59,100	$59,100
	Equipment structural support			
	Pump station 1 platform	1	$12,000	$12,000
	Pump station 2 platform	1	$12,000	$12,000
	Filter backwash pumps	1	$4,000	$4,000
	Buildings			
	Activated carbon system	1	$54,000	$54,000

Table 10-3 (continued)

2,700,000 gpd				
Category	**Item**	**Quantity**	**Rate**	**Cost**
Installation (cont.)	**Electrical and process control**			
	Power/equipment	1	$82,500	$82,500
	Control/instrumentation	1	$44,400	$44,400
	Building services	1	$11,300	$11,300
	Subtotal			**$1,310,300**
Indirect costs	Temporary facilities (1%)			$17,100
	Spare parts (1.5%)			$25,700
	Engineering procurement and contract management (12%)			$205,200
	Commissioning (3%)			$51,300
	Owner team (10%)			$171,000
	Subtotal			**$470,300**
Total costs	Total direct and indirect costs			$2,180,400
	Contingency (20%)			$436,100
	Total Project Cost			**$2,616,500**

Table 10-4

Design Specifications for Cokemaking Breakpoint Chlorination Model Treatment Systems

Item	Type	100,000 gpd		400,000 gpd		2,700,000 gpd	
		Number	Size	Number	Size	Number	Size
Pump station 1	Vertical turbine	2 pumps	1/2 HP	2 pumps	1.5 HP	2 pumps	10 HP
Pump station 2	Vertical turbine	2 pumps	1/2 HP	2 pumps	3 HP	2 pumps	15 BHP
Pump station 3	Vertical turbine	2 pumps	1/2 HP	2 pumps	2 HP	2 pumps	15 HP
Pump station 4	Vertical turbine	2 pumps	1/2 HP	2 pumps	2 HP	2 pumps	15 HP
Pump station 5	Vertical turbine	2 pumps	1.5 HP	2 pumps	5 HP	2 pumps	30 BHP
pH adjust pump	Diaphragm	2	3 HP	2	3 HP	2	3 HP
Clarifier pump	Progressive capacity	2	3 HP	2	3 HP	2	5 BHP
NaOH pump 1	Diaphragm/ANSI	2	2 HP (diaphragm)	2	2 HP (ANSI)	2	2 HP (ANSI)
NaOH pump 2	Diaphragm	2	3 HP	2	3 HP	2	3 HP
Equalization basin	Concrete	1	4,000 ft^3	1	13,500 ft^3	1	90,000 ft^3
Reactor clarifier	Mild steel	1	12' diameter × 12' side	1	22 ft diameter × 12 ft side	1	60' diam.
Chlorination mixing tank	Concrete/lined	1	10 ft × 10 ft × 5 ft/ 5 HP	1	20 ft × 10 ft × 10 ft/ 15 HP	2	25 ft × 20 ft × 13 ft/2 @ 20 HP
Chlorination system	Building	1	10 ft × 9 ft × 20 ft/ 3 HP	1	10 ft × 9 ft × 20 ft/ 3 HP	1	15 ft × 20 ft × 20 ft/ 2 @ 3 HP
Retention tank	Concrete/lined	1	50 ft × 10 ft × 10 ft	1	50 ft × 20 ft × 20 ft	1	100 ft × 50 ft × 25 ft
Dechlorination tank	Concrete/lined	1	10 ft × 10 ft × 5 ft/ 5 HP	1	20 ft × 10 ft × 10 ft/ 15 HP	2	25 ft × 20 ft × 13 ft/ 2 @ 20 HP
Dechlorination system	Building/tank pad	1	8 ft × 8 ft × 15 ft/ 10 ft × 10 ft	1	8 ft × 8 ft × 15 ft/ 10 ft × 10 ft	1	8 ft × 8 ft × 15 ft/ 10 ft × 10 ft
NaOH tank 1	Carbon steel	2	10 ft diameter × 10 ft side	2	10 ft diameter × 10 ft side	2	10' diameter × 10' side

FRP - Fiberglass, reinforced plastic.
ANSI - American National Standards Institute.

Table 10-5

Estimated Investment Costs for Cokemaking Breakpoint Chlorination Model Treatment Systems (100,000 - 2,700,000 gpd)

100,000 gpd				
Category	**Item**	**Quantity**	**Rate**	**Cost**
Major equipment	Reactor clarifier	1	$40,000	$40,000
	Chlorination/dechlorination mixing systems	1	$33,200	$33,200
	NaOH tanks	2	$10,000	$20,000
	Pump station 1	2	$1,000	$2,000
	Pump station 2	2	$1,000	$2,000
	Pump station 3	2	$1,000	$2,000
	Pump station 4	2	$1,000	$2,000
	Pump station 5	2	$1,100	$2,200
	pH adjust pumps	2	$2,200	$4,400
	Clarifier pumps	2	$3,500	$7,000
	NaOH pumps 1	2	$3,500	$7,000
	NaOH pumps 2	2	$2,200	$4,400
	Total freight			**$3,800**
	Subtotal			**$130,000**
Installation	**Mechanical equipment installation**			
	Reactor clarifier	1	$100,000	$100,000
	Chlorination/dechlorination mixing systems	1	$10,000	$10,000
	NaOH tanks	2	$1,000	$2,000
	Pump station 1	2	$1,500	$3,000
	Pump station 2	2	$1,500	$3,000
	Pump station 3	2	$1,500	$3,000
	Pump station 4	2	$1,500	$3,000
	Pump station 5	2	$1,500	$3,000
	pH adjust pumps	2	$2,000	$4,000
	Clarifier pumps	2	$2,000	$4,000
	NaOH pumps 1	2	$2,000	$4,000
	NaOH pumps 2	2	$2,000	$4,000

Table 10-5 (continued)

100,000 gpd				
Category	**Item**	**Quantity**	**Rate**	**Cost**
Installation (cont.)	**Piping installation**			
	Piping/supports	1	$70,500	$70,500
	Insulation and heat tracing	1	$123,400	$123,400
	Control valves/instrumentation	1	$18,100	$18,100
	Civil/structural (includes costs associated with site preparation and grading)			
	Equipment foundations			
	Reactor clarifier/ clarifier pumps	1	$8,800	$8,800
	NaOH pumps	2	$3,500	$7,000
	NaOH tanks	1	$4,200	$4,200
	Chlorination mixing tank	1	$20,500	$20,500
	Chlorination system	1	$12,600	$12,600
	Retention tank	1	$110,800	$110,800
	Dechlorination mixing tank	1	$20,500	$20,500
	Dechlorination system	1	$12,500	$12,500
	pH adjust pumps	1	$3,500	$3,500
	Equalization basin	1	$59,100	$59,100
	Equipment structural support			
	Pump station 1 platform	1	$4,000	$4,000
	Pump station 2 platform	1	$4,000	$4,000
	Pump station 3 platform	1	$4,000	$4,000
	Pump station 4 platform	1	$4,000	$4,000
	Pump station 5 platform	1	$4,000	$4,000
	Buildings			
	Chlorination system	1	$2,000	$2,000
	Dechlorination system	1	$2,000	$2,000
	Electrical and process control			
	Power/equipment	1	$99,400	$99,400
	Control/instrumentation	1	$90,300	$90,300
	UFC compliance costs	1	$250,600	$250,600
	Building Services (includes sodium hypochlorite storage and delivery costs)	1	$3,900	$3,900
	Subtotal			**$1,082,500**

Table 10-5 (continued)

100,000 gpd				
Category	**Item**	**Quantity**	**Rate**	**Cost**
Indirect costs	Temporary facilities (1%)			$12,100
	Spare parts (1.5%)			$18,200
	Engineering procurement and contract management (12%)			$145,400
	Commissioning (3%)			$36,400
	Owner team (10%)			$121,200
	Subtotal			**$333,300**
Total costs	Total direct and indirect costs			$1,545,200
	Contingency (20%)			$309,000
	Total Project Cost			**$1,854,200**

400,000 gpd				
Category	**Item**	**Quantity**	**Rate**	**Cost**
Major equipment	Reactor clarifier	1	$52,000	$52,000
	Chlorination/dechlorination mixing systems	1	$118,800	$118,800
	NaOH tanks	2	$10,000	$20,000
	Pump station 1	2	$5,000	$10,000
	Pump station 2	2	$5,000	$10,000
	Pump station 3	2	$5,000	$10,000
	Pump station 4	2	$5,000	$10,000
	Pump station 5	2	$5,100	$10,200
	pH adjust pumps	2	$2,200	$4,400
	Clarifier pumps	2	$3,500	$7,000
	NaOH pumps 1	2	$5,000	$10,000
	NaOH pumps 2	2	$2,200	$4,400
	Total freight			**$8,000**
	Subtotal			**$274,800**

Table 10-5 (continued)

400,000 gpd				
Category	**Item**	**Quantity**	**Rate**	**Cost**
Installation	**Mechanical equipment installation**			
	Reactor clarifier	1	$105,000	$105,000
	Chlorination/dechlorination mixing systems	1	$35,600	$35,600
	NaOH tanks	2	$1,000	$2,000
	Pump station 1	2	$2,000	$4,000
	Pump station 2	2	$2,000	$4,000
	Pump station 3	2	$2,000	$4,000
	Pump station 4	2	$2,000	$4,000
	Pump station 5	2	$2,000	$4,000
	pH adjust pumps	2	$2,000	$4,000
	Clarifier pumps	2	$2,000	$4,000
	NaOH pumps 1	2	$1,500	$3,000
	NaOH pumps 2	2	$2,000	$4,000
	Piping installation			
	Piping/supports	1	$123,900	$123,900
	Insulation and heat tracing	1	$128,800	$128,800
	Control valves/instrumentation	1	$25,400	$25,400
	Civil/structural (includes costs associated with site preparation and grading)			
	Equipment foundations			
	Reactor clarifier/clarifier pumps	1	$19,300	$19,300
	NaOH pumps	2	$3,500	$7,000
	NaOH tanks	1	$4,200	$4,200
	Chlorination mixing tank	1	$41,000	$41,000
	Chlorination system	1	$12,900	$12,900
	Retention tank	1	$221,600	$221,600
	Dechlorination mixing tank	1	$41,000	$41,000
	Dechlorination system	1	$12,900	$12,900
	pH adjust pumps	1	$3,500	$3,500
	Equalization basin	1	$175,500	$175,500

Table 10-5 (continued)

400,000 gpd				
Category	**Item**	**Quantity**	**Rate**	**Cost**
Installation (cont.)	**Equipment structural support**			
	Pump station 1 platform	1	$6,000	$6,000
	Pump station 2 platform	1	$8,000	$8,000
	Pump station 3 platform	1	$6,000	$6,000
	Pump station 4 platform	1	$6,000	$6,000
	Pump station 5 platform	1	$12,000	$12,000
	Buildings			
	Chlorination system	1	$2,000	$2,000
	Dechlorination system	1	$2,000	$2,000
	Electrical and process control			
	Power/equipment	1	$99,500	$99,500
	Control/instrumentation	1	$90,300	$90,300
	UFC compliance costs	1	$250,600	$250,600
	Building Services (includes sodium hypochlorite storage and delivery costs)	1	$4,700	$4,700
	Subtotal			**$1,774,500**
Indirect costs	Temporary facilities (1%)			$17,700
	Spare parts (1.5%)			$26,600
	Engineering procurement and contract management (12%)			$212,900
	Commissioning (3%)			$53,200
	Owner team (10%)			$177,500
	Subtotal			**$488,000**
Total costs	Total direct and indirect costs			$2,262,500
	Contingency (20%)			$452,500
	Total Project Cost			**$2,715,100**

Table 10-5 (continued)

2,700,000 gpd				
Category	**Item**	**Quantity**	**Rate**	**Cost**
Major equipment	Reactor clarifier	1	$155,000	$155,000
	Chlorination/dechlorination mixing systems	1	$798,000	$798,000
	NaOH tanks	2	$10,000	$20,000
	Pump station 1	2	$9,000	$18,000
	Pump station 2	2	$10,500	$21,000
	Pump station 3	2	$10,500	$21,000
	Pump station 4	2	$10,500	$21,000
	Pump station 5	2	$11,000	$22,000
	pH adjust pumps	2	$2,200	$4,400
	Clarifier pumps	2	$5,500	$11,000
	NaOH pumps 1	2	$8,500	$17,000
	NaOH pumps 2	2	$3,500	$7,000
	Total freight			**$33,500**
	Subtotal			**$1,148,900**
Installation	**Mechanical equipment installation**			
	Reactor clarifier	1	$300,000	$300,000
	Chlorination/dechlorination mixing systems	1	$239,400	$239,400
	NaOH tanks	2	$1,000	$2,000
	Pump station 1	2	$2,500	$5,000
	Pump station 2	2	$2,500	$5,000
	Pump station 3	2	$2,500	$5,000
	Pump station 4	2	$2,500	$5,000
	Pump station 5	2	$2,500	$5,000
	pH adjust pumps	2	$2,000	$4,000
	Clarifier pumps	2	$2,000	$4,000
	NaOH pumps 1	2	$2,000	$4,000
	NaOH pumps 2	2	$2,000	$4,000

Table 10-5 (continued)

2,700,000 gpd				
Category	**Item**	**Quantity**	**Rate**	**Cost**
Installation (cont.)	**Piping installation**			
	Piping/supports	1	$226,200	$226,200
	Insulation and heat tracing	1	$142,400	$142,400
	Control valves/instrumentation	1	$40,200	$40,200
	Civil/structural (includes costs associated with site preparation and grading)			
	Equipment foundations			
	Reactor clarifier/clarifier pumps	1	$78,800	$78,800
	NaOH pumps	2	$3,500	$7,000
	NaOH tanks	1	$5,300	$5,300
	Chlorination mixing tank	2	$97,400	$194,800
	Chlorination system	1	$32,800	$32,800
	Retention tank	1	$1,000,800	$1,000,800
	Dechlorination mixing tank	2	$97,400	$194,800
	Dechlorination system	1	$11,500	$11,500
	pH adjust pumps	1	$3,500	$3,500
	Equalization basin	1	$657,400	$657,400
	Equipment structural support			
	Pump station 1 platform	1	$16,000	$16,000
	Pump station 2 platform	1	$16,000	$16,000
	Pump station 3 platform	1	$16,000	$16,000
	Pump station 4 platform	1	$16,000	$16,000
	Pump station 5 platform	1	$16,000	$16,000
	Buildings			
	Chlorination system	1	$6,000	$6,000
	Dechlorination system	1	$2,000	$2,000
	Electrical and process control			
	Power/equipment	1	$195,800	$195,800
	Control/instrumentation	1	$117,000	$117,000
	UFC compliance costs	1	$250,600	$250,600
	Building Services (includes sodium hypochlorite storage and delivery costs)	1	$12,300	$12,300
	Subtotal			**$3,783,900**

Table 10-5 (continued)

2,700,000 gpd				
Category	**Item**	**Quantity**	**Rate**	**Cost**
Indirect costs	Temporary facilities (1%)			$47,400
	Spare parts (1.5%)			$71,100
	Engineering procurement and contract management (12%)			$568,900
	Commissioning (3%)			$142,200
	Owner team (10%)			$474,100
	Subtotal			**$1,303,700**
Total costs	Total direct and indirect costs			$6,044,500
	Contingency (20%)			$1,208,900
	Total Project Cost			**$7,253,400**

Table 10-6

Design Specifications for Metals Precipitation Model Treatment Systems for Blast Furnace and Sintering Wastewater

Item	Type	150,000 gpd		750,000 gpd		2,000,000 gpd	
		Number	Size	Number	Size	Number	Size
Pump station 1	Vertical turbine	2 pumps	1/2 HP	2 pumps	3 HP	2 pumps	7.5 HP
Pump station 2	Vertical turbine	2 pumps	2 HP	2 pumps	10 HP	2 pumps	25 HP
Clarifier pump	Diaphragm/ANSI	2	1/3 HP (diaphragm)	2	1 HP (diaphragm)	2	1/2 HP (ANSI)
Filter press pump	Diaphragm	2	1/3 HP	2	1/3 HP	2	3 BHP
NaOH pump	ANSI	2	1/3 HP	2	1/2 HP	2	1.5 BHP
Acid pump	Diaphragm	2	1/3 HP	2	1/3 HP	2	3 BHP
Sump	Concrete	1	10 ft^3	1	40 ft^3	1	80 ft^3
Equalization basin	Concrete	1	5,100 ft^3	1	26,000 ft^3	1	67,000 ft^3
Reactor clarifier	Mild steel	1	15 ft diameter × 12 ft side/ 1 HP & 2.5 HP	1	35 ft diameter × 12 ft side/ 1 HP & 5 HP	1	51 ft diameter × 12 ft side/2 HP & 10 HP
Clarifier overflow	Concrete	1	450 ft^3	1	1,260 ft^3	1	14,000 ft^3
NaOH tank	Carbon steel	2	10 ft diameter × 10 ft side	2	10 ft diameter × 10 ft side	2	10 ft diameter × 10 ft side
Acid tank	FRP	2	10 ft diameter × 10 ft side	2	10 ft diameter × 10 ft side	2	10 ft diameter × 10 ft side
pH control tank	Stainless	1	90 ft^3/1HP	1	450 ft^3/1HP	1	1,200 ft^3/3 HP
Filter press	Pneumatic	1	18 ft × 7 ft × 6 ft/10 HP & 7.5 HP	1	18 ft × 7 ft × 6 ft/10 HP & 7.5 HP	1	18 ft × 7 ft × 6 ft/ 10 HP & 7.5 HP

FRP - Fiberglass, reinforced plastic.
ANSI - American National Standards Institute.

Table 10-7

Estimated Investment Costs for Metals Precipitation Model Treatment Systems for Blast Furnace and Sintering Wastewater (150,000 - 2,000,000 gpd)

150,000 gpd				
Category	**Item**	**Quantity**	**Rate**	**Cost**
Major equipment	Reactor clarifier	1	$40,000	$40,000
	pH control tank	1	$8,900	$8,900
	Acid/NaOH tanks	4	$10,000	$40,000
	Filter press	1	$175,000	$175,000
	Pump station 1	2	$1,500	$3,000
	Pump station 2	2	$3,000	$6,000
	Clarifier pumps	2	$2,200	$4,400
	Filter press pumps	2	$2,200	$4,400
	NaOH pumps	2	$5,500	$11,000
	Acid pumps	2	$2,200	$4,400
	Total freight			**$8,900**
	Subtotal			**$306,000**
Installation	**Mechanical equipment installation**			
	Reactor clarifier	1	$110,000	$110,000
	pH control tank	1	$2,300	$2,300
	Acid/NaOH tanks	4	$1,000	$4,000
	Filter press	1	$52,500	$52,500
	Pump station 1	2	$1,500	$3,000
	Pump station 2	2	$1,500	$3,000
	Clarifier pumps	2	$2,000	$4,000
	Filter press pumps	2	$2,000	$4,000
	NaOH pumps	2	$1,500	$3,000
	Acid pumps	2	$2,000	$4,000

Table 10-7 (continued)

150,000 gpd				
Category	**Item**	**Quantity**	**Rate**	**Cost**
Installation (cont.)	**Piping installation**			
	Piping/supports	1	$83,500	$83,500
	Insulation and heat tracing	1	$144,600	$144,600
	Control valves/instrumentation	1	$13,800	$13,800
	Civil/structural (includes costs associated with site preparation and grading)			
	Equipment foundations			
	Reactor clarifier/overflow tank	1	$37,800	$37,800
	Clarifier pumps	1	$3,500	$3,500
	pH control tank	1	$1,800	$1,800
	Acid/NaOH tanks and pumps	1	$14,000	$14,000
	Filter press	1	$7,000	$7,000
	Equalization basin	1	$90,300	$90,300
	Sump/filter press pumps	1	$6,700	$6,700
	Equipment structural support			
	Pump station 1 platform	1	$2,000	$2,000
	Pump station 2 platform	1	$4,000	$4,000
	Electrical and process control			
	Power/equipment	1	$82,200	$82,200
	Control/instrumentation	1	$78,800	$78,800
	Subtotal			**$759,800**
Indirect costs	Temporary facilities (1%)			$10,700
	Spare parts (1.5%)			$16,000
	Engineering procurement and contract management (12%)			$127,900
	Commissioning (3%)			$32,000
	Owner team (10%)			$106,600
	Subtotal			**$293,200**
Total costs	Total direct and indirect costs			$1,358,900
	Contingency (20%)			$271,800
	Total Project Cost			**$1,630,700**

Table 10-7 (continued)

750,000 gpd				
Category	**Item**	**Quantity**	**Rate**	**Cost**
Major equipment	Reactor clarifier	1	$75,000	$75,000
	pH control tank	1	$23,500	$23,500
	Acid/NaOH tanks	4	$10,000	$40,000
	Filter press	1	$175,000	$175,000
	Pump station 1	2	$5,500	$11,000
	Pump station 2	2	$8,000	$16,000
	Clarifier pumps	2	$3,500	$7,000
	Filter press pumps	2	$2,200	$4,400
	NaOH pumps	2	$8,000	$16,000
	Acid pumps	2	$2,200	$4,400
	Total freight			**$11,200**
	Subtotal			**$383,500**
Installation	**Mechanical equipment installation**			
	Reactor clarifier	1	$162,000	$162,000
	pH control tank	1	$6,000	$6,000
	Acid/NaOH tanks	4	$1,000	$4,000
	Filter press	1	$52,500	$52,500
	Pump station 1	2	$2,000	$4,000
	Pump station 2	2	$2,000	$4,000
	Clarifier pumps	2	$2,000	$4,000
	Filter press pumps	2	$2,000	$4,000
	NaOH pumps	2	$1,500	$3,000
	Acid pumps	2	$2,000	$4,000
	Piping installation			
	Piping/supports	1	$137,000	$137,000
	Insulation and heat tracing	1	$145,300	$145,300
	Control valves/instrumentation	1	$20,100	$20,100

Table 10-7 (continued)

750,000 gpd				
Category	**Item**	**Quantity**	**Rate**	**Cost**
Installation (cont.)	**Civil/structural (includes costs associated with site preparation and grading)**			
	Equipment foundations			
	Reactor clarifier/overflow tank	1	$59,000	$59,000
	Clarifier pumps	1	$3,500	$3,500
	pH control tank	1	$5,300	$5,300
	Acid/NaOH tanks and pumps	1	$14,000	$14,000
	Filter press	1	$7,000	$7,000
	Equalization basin	1	$257,600	$257,600
	Sump/filter press pumps	1	$7,500	$7,500
	Equipment structural support			
	Pump station 1 platform	1	$4,000	$4,000
	Pump station 2 platform	1	$8,000	$8,000
	Electrical and process control			
	Power/equipment	1	$82,200	$82,200
	Control/instrumentation	1	$78,800	$78,800
	Subtotal			**$1,076,800**
Indirect costs	Temporary facilities (1%)			$14,600
	Spare parts (1.5%)			$21,900
	Engineering procurement and contract management (12%)			$175,200
	Commissioning (3%)			$43,800
	Owner team (10%)			$146,000
	Subtotal			**$401,500**
Total costs	Total direct and indirect costs			$1,861,900
	Contingency (20%)			$372,400
	Total Project Cost			**$2,234,300**

Table 10-7 (continued)

2,000,000 gpd				
Category	**Item**	**Quantity**	**Rate**	**Cost**
Major equipment	Reactor clarifier	1	$130,000	$130,000
	pH control tank	1	$47,400	$47,400
	Acid/NaOH tanks	4	$10,000	$40,000
	Filter press	1	$175,000	$175,000
	Pump station 1	2	$9,000	$18,000
	Pump station 2	2	$9,500	$19,000
	Clarifier pumps	2	$5,500	$11,000
	Filter press pumps	2	$2,200	$4,400
	NaOH pumps	2	$8,500	$17,000
	Acid pumps	2	$7,500	$15,000
	Total freight			**$14,300**
	Subtotal			**$491,100**
Installation	**Mechanical equipment installation**			
	Reactor clarifier	1	$253,000	$253,000
	pH control tank	1	$12,000	$12,000
	Acid/NaOH tanks	4	$10,000	$40,000
	Filter press	1	$52,500	$52,500
	Pump station 1	2	$2,500	$5,000
	Pump station 2	2	$2,500	$5,000
	Clarifier pumps	2	$1,500	$3,000
	Filter press pumps	2	$2,000	$4,000
	NaOH pumps	2	$2,000	$4,000
	Acid pumps	2	$2,000	$4,000
	Piping installation			
	Piping/supports	1	$174,200	$174,200
	Insulation and heat tracing	1	$149,800	$149,800
	Control valves/instrumentation	1	$24,600	$24,600

Table 10-7 (continued)

2,000,000 gpd				
Category	**Item**	**Quantity**	**Rate**	**Cost**
Installation (cont.)	**Civil/structural (includes costs associated with site preparation and grading)**			
	Equipment foundations			
	Reactor clarifier/overflow tank	1	$224,800	$224,800
	Clarifier pumps	1	$7,000	$7,000
	pH control tank	1	$10,500	$10,500
	Acid/NaOH tanks and pumps	1	$17,500	$17,500
	Filter press	1	$8,700	$8,700
	Equalization basin	1	$508,300	$508,300
	Sump/filter press pumps	1	$12,500	$12,500
	Equipment structural support			
	Pump station 1 platform	1	$6,000	$6,000
	Pump station 2 platform	1	$8,000	$8,000
	Electrical and process control			
	Power/equipment	1	$105,900	$105,900
	Control/instrumentation	1	$78,800	$78,800
	Subtotal			**$1,719,100**
Indirect costs	Temporary facilities (1%)			$22,100
	Spare parts (1.5%)			$33,200
	Engineering procurement and contract management (12%)			$265,200
	Commissioning (3%)			$66,300
	Owner team (10%)			$221,000
	Subtotal			**$607,800**
Total costs	Total direct and indirect costs			$2,818,000
	Contingency (20%)			$563,600
	Total Project Cost			**$3,381,600**

Table 10-8

Design Specifications for Breakpoint Chlorination Model Treatment Systems for Blast Furnace and Sintering Wastewater

Item	Type	150,000 gpd		750,000 gpd		2,000,000 gpd	
		Number	Size	Number	Size	Number	Size
Pump station 1	Vertical turbine	2 pumps	1 HP	2 pumps	4 HP	2 pumps	10 HP
Pump station 2	Vertical turbine	2 pumps	1 HP	2 pumps	3 HP	2 pumps	7.5 HP
Pump station 3	Vertical turbine	2 pumps	1 HP	2 pumps	3 HP	2 pumps	7.5 HP
Pump station 4	Vertical turbine	2 pumps	1 HP	2 pumps	3 HP	2 pumps	7.5 HP
pH adjust pump	Diaphragm	2	3 HP	2	3 HP	2	3 HP
NaOH pump	Diaphragm	2	1/2 HP	2	1/2 HP	2	1/2 HP
Equalization basin	Concrete	1	5,100 ft^3	1	25,000 ft^3	1	67,000 ft^3
Chlorination mixing tank	Concrete	1	11 ft × 10 ft × 5 ft/5 HP	1	20 ft × 15 ft × 10 ft/20 HP	1	25 ft × 20 ft × 15 ft/3 @ 20 HP
Chlorination system	Building	1	10 ft × 9 ft × 20 ft/3 HP	1	10 ft × 9 ft × 20 ft/3 HP	1	15 ft × 20 ft × 20 ft/2 @ 3 HP
Retention tank	Concrete	1	50 ft × 11 ft × 10 ft	1	50 ft × 30 ft × 20 ft	1	80 ft × 50 ft × 20 ft
Dechlorination tank	Concrete	1	11 ft × 10 ft × 5 ft/5 HP	1	20 ft × 15 ft × 10 ft/20 HP	1	25 ft × 20 ft × 15 ft/3 @ 20 HP
Dechlorination system	Building/tank pad	1	8 ft × 8 ft × 15 ft/10 ft × 10 ft	1	8 ft × 8 ft × 15 ft/10 ft × 10 ft	1	8 ft × 8 ft × 15 ft/10 ft × 10 ft
Dechlorination system sodium bisulfite storage tank	Fiberglass/tank foundation	1	400 gal	1	1,000 gal	1	7,000 gal
NaOH tank	Carbon steel	2	10 ft diameter × 10 ft side	2	10 ft diameter × 10 ft side	2	10 ft diameter × 10 ft side

FRP - Fiberglass, reinforced plastic.
ANSI - American National Standards Institute.

Table 10-9

Estimated Investment Costs for Breakpoint Chlorination Model Treatment Systems for Blast Furnace and Sintering Wastewater (150,000 - 2,000,000 gpd)

150,000 gpd				
Category	**Item**	**Quantity**	**Rate**	**Cost**
Major equipment	Chlorination/dechlorination mixing systems	1	$41,700	$41,700
	NaOH tanks	2	$10,000	$20,000
	Pump station 1	2	$1,500	$3,000
	Pump station 2	2	$1,500	$3,000
	Pump station 3	2	$1,500	$3,000
	Pump station 4	2	$1,500	$3,000
	pH adjust pumps	2	$2,200	$4,400
	Sodium bisulfite storage tank	1	$4,500	$4,500
	NaOH pumps	2	$2,200	$4,400
	Total freight			**$2,600**
	Subtotal			**$89,600**
Installation	**Mechanical equipment installation**			
	Chlorination/dechlorination mixing systems	1	$12,500	$12,500
	NaOH tanks	2	$1,000	$2,000
	Pump station 1	2	$1,500	$3,000
	Pump station 2	2	$1,500	$3,000
	Pump station 3	2	$1,500	$3,000
	Pump station 4	2	$1,500	$3,000
	pH adjust pumps	2	$2,000	$4,000
	NaOH pumps	2	$2,000	$4,000
	Piping installation			
	Piping/supports	1	$74,700	$74,700
	Insulation and heat tracing	1	$119,000	$119,000
	Control valves/instrumentation	1	$18,800	$18,800

Table 10-9 (continued)

150,000 gpd				
Category	**Item**	**Quantity**	**Rate**	**Cost**
Installation (cont.)	**Civil/structural (includes costs associated with site preparation and grading)**			
	Equipment foundations			
	NaOH pumps	1	$3,500	$3,500
	NaOH tanks	1	$4,200	$4,200
	Chlorination mixing tank	1	$25,100	$25,100
	Chlorination system	1	$12,600	$12,600
	Retention tank	1	$118,500	$118,500
	Dechlorination mixing tank	1	$25,100	$25,100
	Dechlorination system	1	$12,500	$12,500
	pH adjust pumps	1	$3,500	$3,500
	Equalization basin	1	$77,800	$77,800
	Equipment structural support			
	Pump station 1 platform	1	$4,000	$4,000
	Pump station 2 platform	1	$4,000	$4,000
	Pump station 3 platform	1	$4,000	$4,000
	Pump station 4 platform	1	$4,000	$4,000
	Buildings			
	Chlorination system	1	$2,000	$2,000
	Dechlorination system	1	$2,000	$2,000
	Electrical and process control			
	Power/equipment	1	$71,900	$71,900
	Control/instrumentation	1	$67,300	$67,300
	UFC compliance costs	1	$250,600	$250,600
	Building Services (includes sodium hypochlorite storage and delivery costs)	1	$4,800	$4,800
	Subtotal			**$944,400**

Table 10-9 (continued)

150,000 gpd				
Category	**Item**	**Quantity**	**Rate**	**Cost**
Indirect costs	Temporary facilities (1%)			$10,300
	Spare parts (1.5%)			$15,500
	Engineering procurement and contract management (12%)			$124,100
	Commissioning (3%)			$31,000
	Owner team (10%)			$103,400
	Subtotal			**$284,400**
Total costs	Total direct and indirect costs			$1,318,400
	Contingency (20%)			$263,700
	Total Project Cost			**$1,582,000**

750,000 gallon per day				
Category	**Item**	**Quantity**	**Rate**	**Cost**
Major equipment	Chlorination/dechlorination mixing systems	1	$193,500	$193,500
	NaOH tanks	2	$10,000	$20,000
	Pump station 1	2	$5,000	$10,000
	Pump station 2	2	$5,000	$10,000
	Pump station 3	2	$5,000	$10,000
	Pump station 4	2	$5,000	$10,000
	pH adjust pumps	2	$2,200	$4,400
	Sodium bisulfite storage tank	1	$5,300	$5,300
	NaOH pumps	2	$2,200	$4,400
	Total freight			**$8,800**
	Subtotal			**$276,400**
Installation	**Mechanical equipment installation**			
	Chlorination/dechlorination mixing systems	1	$58,100	$58,100
	NaOH tanks	2	$1,000	$2,000
	Pump station 1	2	$2,000	$4,000
	Pump station 2	2	$2,000	$4,000
	Pump station 3	2	$2,000	$4,000
	Pump station 4	2	$2,000	$4,000
	pH adjust pumps	2	$2,000	$4,000
	NaOH pumps	2	$2,000	$4,000

Table 10-9 (continued)

750,000 gallon per day				
Category	**Item**	**Quantity**	**Rate**	**Cost**
Installation (cont.)	**Piping installation**			
	Piping/supports	1	$127,000	$127,000
	Insulation and heat tracing	1	$122,800	$122,800
	Control valves/instrumentation	1	$24,900	$24,900
	Civil/structural (includes costs associated with site preparation and grading)			
	Equipment foundations			
	NaOH pumps	1	$3,500	$3,500
	NaOH tanks	1	$4,200	$4,200
	Chlorination mixing tank	1	$64,800	$64,800
	Chlorination system	1	$12,600	$12,600
	Retention tank	1	$385,100	$385,100
	Dechlorination mixing tank	1	$64,800	$64,800
	Dechlorination system	1	$12,600	$12,600
	pH adjust pumps	1	$3,500	$3,500
	Equalization basin	1	$264,400	$264,400
	Equipment structural support			
	Pump station 1 platform	1	$8,000	$8,000
	Pump station 2 platform	1	$8,000	$8,000
	Pump station 3 platform	1	$8,000	$8,000
	Pump station 4 platform	1	$8,000	$8,000
	Buildings			
	Chlorination system	1	$2,000	$2,000
	Dechlorination system	1	$2,000	$2,000
	Electrical and process control			
	Power/equipment	1	$74,000	$74,000
	Control/instrumentation	1	$67,300	$67,300
	UFC compliance costs	1	$250,600	$250,600
	Building Services (includes sodium hypochlorite storage and delivery costs)	1	$6,600	$6,600
	Subtotal			**$1,608,700**

Table 10-9 (continued)

750,000 gallon per day				
Category	**Item**	**Quantity**	**Rate**	**Cost**
Indirect costs	Temporary facilities (1%)			$19,500
	Spare parts (1.5%)			$29,300
	Engineering procurement and contract management (12%)			$234,500
	Commissioning (3%)			$58,600
	Owner team (10%)			$195,400
	Subtotal			**$537,300**
Total costs	Total direct and indirect costs			$2,422,400
	Contingency (20%)			$484,500
	Total Project Cost			**$2,906,900**

2,000,000 gpd				
Category	**Item**	**Quantity**	**Rate**	**Cost**
Major equipment	Chlorination/dechlorination mixing systems	1	$506,100	$506,100
	NaOH tanks	2	$10,000	$20,000
	Pump station 1	2	$9,000	$18,000
	Pump station 2	2	$9,000	$18,000
	Pump station 3	2	$9,000	$18,000
	Pump station 4	2	$9,000	$18,000
	pH adjust pumps	2	$2,200	$4,400
	Sodium bisulfite storage tank	1	$13,300	$13,300
	NaOH pumps	2	$2,200	$4,400
	Total freight			**$20,700**
	Subtotal			**$640,900**
Installation	**Mechanical equipment installation**			
	Chlorination/dechlorination mixing systems	1	$151,800	$151,800
	NaOH tanks	2	$1,000	$2,000
	Pump station 1	2	$2,500	$5,000
	Pump station 2	2	$2,500	$5,000
	Pump station 3	2	$2,500	$5,000
	Pump station 4	2	$2,500	$5,000
	pH adjust pumps	2	$2,000	$4,000
	NaOH pumps	2	$2,000	$4,000

Table 10-9 (continued)

2,000,000 gpd				
Category	**Item**	**Quantity**	**Rate**	**Cost**
Installation (cont.)	**Piping installation**			
	Piping/supports	1	$156,900	$156,900
	Insulation and heat tracing	1	$126,700	$126,700
	Control valves/instrumentation	1	$28,900	$28,900
	Civil/structural (includes costs associated with site preparation and grading)			
	Equipment foundations			
	NaOH pumps	1	$3,500	$3,500
	NaOH tanks	1	$4,200	$4,200
	Chlorination mixing tank	1	$120,300	$120,300
	Chlorination system	1	$31,100	$31,100
	Retention tank	1	$746,600	$746,600
	Dechlorination mixing tank	1	$120,300	$120,300
	Dechlorination system	1	$12,500	$12,500
	pH adjust pumps	1	$3,500	$3,500
	Equalization basin	1	$544,900	$544,900
	Equipment structural support			
	Pump station 1 platform	1	$16,000	$16,000
	Pump station 2 platform	1	$16,000	$16,000
	Pump station 3 platform	1	$16,000	$16,000
	Pump station 4 platform	1	$16,000	$16,000
	Buildings			
	Chlorination system	1	$6,000	$6,000
	Dechlorination system	1	$2,000	$2,000
	Electrical and process control			
	Power/equipment	1	$114,000	$114,000
	Control/instrumentation	1	$86,500	$86,500
	UFC compliance costs	1	$250,600	$250,600
	Building Services (includes sodium hypochlorite storage and delivery costs)	1	$10,500	$10,500
	Subtotal			**$2,614,800**

Table 10-9 (continued)

2,000,000 gpd				
Category	**Item**	**Quantity**	**Rate**	**Cost**
Indirect costs	Temporary facilities (1%)			$34,500
	Spare parts (1.5%)			$51,800
	Engineering procurement and contract management (12%)			$413,900
	Commissioning (3%)			$103,500
	Owner team (10%)			$344,900
	Subtotal			**$948,400**
Total costs	Total direct and indirect costs			$4,204,100
	Contingency (20%)			$840,800
	Total Project Cost			**$5,044,900**

Table 10-10

Design Specifications for Metals Precipitation Model Treatment Systems for Basic Oxygen Furnace, Vacuum Degassing, and Continuous Casting Wastewater

Item	Type	150,000 gpd		750,000 gpd		2,000,000 gpd	
		Number	Size	Number	Size	Number	Size
Pump station 1	Vertical turbine	2 pumps	1/2 HP	2 pumps	3 HP	2 pumps	7.5 HP
Pump station 2	Vertical turbine	2 pumps	2 HP	2 pumps	10 HP	2 pumps	25 HP
Clarifier pumps	Diaphragm/ANSI	2 pumps	1/3 HP (diaphragm)	2 pumps	1 HP (diaphragm)	2 pumps	1/2 HP (ANSI)
NaOH pump	ANSI	2 pumps	1/3 HP	2 pumps	1/2 HP	2 pumps	1.5 BHP
Acid pump	Diaphragm	2 pumps	1/3 HP	2 pumps	1/3 HP	2 pumps	3 BHP
Equalization basin	Steel/Mixer	1	5,100 ft^3/1.5HP	1	26,000 ft^3/5 HP	1	67,000 ft^3/10 HP
pH adjustment tank	Steel/Mixer	1	300 ft^3/1.75HP	1	1,500 ft^3/3.5HP	1	3,500 ft^3/7.5HP
Flash mix tank	Steel/Mixer	1	50 ft^3/0.3HP	1	200 ft^3/1.17HP	1	500 ft^3/3.5HP
Flocculation tank	Steel/Mixer	1	300 ft^3/1 HP	1	1,500 ft^3/5 HP	1	3,500 ft^3/10 HP
Clarifier	Mild Steel	1	15 ft diameter × 12 ft side/ 1 HP & 2.5 HP	1	35 ft diameter × 12 ft side/ 1 HP & 5 HP	1	51 ft diameter × 12 ft side/2 HP & 10 HP
Clarifier overflow	Concrete	1	450 ft^3/2 HP	1	1,260 ft^3/10 HP	1	14,000 ft^3/20 HP
NaOH tank	Carbon steel	2	10 ft diameter × 10 ft side	2	10 ft diameter × 10 ft side	2	10 ft diameter × 10 ft side
Acid tank	FRP	2	10 ft diameter × 10 ft side	2	10 ft diameter × 10 ft side	2	10 ft diameter × 10 ft side
pH control tank	Stainless	1	90 ft^3/1HP	1	450 ft^3/1HP	1	1200 ft^3/3 HP

FRP - Fiberglass, reinforced plastic.
ANSI - American National Standards Institute.

Table 10-11

Estimated Investment Costs for Metals Precipitation Model Treatment Systems for Basic Oxygen Furnace, Vacuum Degassing, and Continuous Casting Wastewater (150,000 - 2,000,000 gpd)

150,000 gpd				
Category	**Item**	**Quantity**	**Rate**	**Cost**
Major equipment	Mixer (for equalization basin)	1	$23,000	$23,000
	Flash mix tank (with mixer)	1	$5,000	$5,000
	Flocculation tank (with slow speed mixer)	1	$18,300	$18,300
	Clarifier	1	$94,500	$94,500
	pH control tank	1	$8,900	$8,900
	Acid/NaOH tanks	4	$10,000	$40,000
	pH adjust tank	1	$11,300	$11,300
	Mixer (for pH adjust tank)	1	$8,500	$8,500
	Pump station 1	2	$1,500	$3,000
	Pump station 2	2	$3,000	$6,000
	Clarifier pumps	2	$2,200	$4,400
	NaOH pumps	2	$5,500	$11,000
	Acid pumps	2	$2,200	$4,400
	Total freight			**$7,100**
	Subtotal			**$245,400**
Installation	**Mechanical equipment installation**			
	Mixer (for equalization basin)	1	$1,400	$1,400
	Flash mix tank (with mixer)	1	$1,000	$1,000
	Flocculation tank (with slow speed mixer)	1	$1,000	$1,000
	Clarifier	1	$40,500	$40,500
	pH control tank	1	$2,300	$2,300
	Acid/NaOH tanks	4	$1,000	$4,000
	pH adjust tanks	1	$1,000	$1,000
	Mixer (for pH adjust tank)	1	$500	$500
	Pump station 1	2	$1,500	$3,000

Table 10-11 (continued)

150,000 gpd				
Category	**Item**	**Quantity**	**Rate**	**Cost**
Installation (cont.)	Pump station 2	2	$1,500	$3,000
	Clarifier pumps	2	$2,000	$4,000
	NaOH pumps	2	$1,500	$3,000
	Acid pumps	2	$2,000	$4,000
	Piping installation			
	Piping/supports	1	$82,800	$82,800
	Insulation and heat tracing	1	$142,700	$142,700
	Control valves/instrumentation	1	$13,700	$13,700
	Civil/structural (includes costs associated with site preparation and grading)			
	Equipment foundations			
	Clarifier/overflow tank	1	$37,800	$37,800
	Clarifier pumps	1	$3,500	$3,500
	Flash mix tank (with mixer)	1	$800	$800
	Flocculation tank (with slow speed mixer)	1	$2,000	$2,000
	pH control tank	1	$1,800	$1,800
	Acid/NaOH tanks and pumps	1	$14,000	$14,000
	pH adjust tank	1	$2,000	$2,000
	Equalization basin	1	$90,300	$90,300
	Equipment structural support			
	Pump station 1 platform	1	$2,000	$2,000
	Pump station 2 platform	1	$4,000	$4,000
	Electrical and process control			
	Power/equipment	1	$68,400	$68,400
	Control/instrumentation	1	$63,500	$63,500
	Software	1	$28,000	$28,000
	Subtotal			**$626,000**

Table 10-11 (continued)

150,000 gpd				
Category	**Item**	**Quantity**	**Rate**	**Cost**
Indirect costs	Temporary facilities (1%)			$8,700
	Spare parts (1.5%)			$13,100
	Engineering procurement and contract management (12%)			$104,600
	Commissioning (3%)			$26,100
	Owner team (10%)			$87,100
	Subtotal			**$239,600**
Total costs	Total direct and indirect costs			$1,111,000
	Contingency (20%)			$222,200
	Total Project Cost			**$1,333,200**

750,000 gpd				
Category	**Item**	**Quantity**	**Rate**	**Cost**
Major equipment	Mixer (for equalization basin)	1	$50,000	$50,000
	Flash mix tank (with mixer)	1	$18,000	$18,000
	Flocculation tank (with slow speed mixer)	1	$49,000	$49,000
	Clarifier	1	$155,000	$155,000
	pH control tank	1	$23,500	$23,500
	Acid/NaOH tanks	4	$10,000	$40,000
	pH adjust tank	1	$34,500	$34,500
	Mixer (for pH adjust tank)	1	$10,000	$10,000
	Pump station 1	2	$5,500	$11,000
	Pump station 2	2	$8,000	$16,000
	Clarifier pumps	2	$3,500	$7,000
	NaOH pumps	2	$8,000	$16,000
	Acid pumps	2	$2,200	$4,400
	Total freight			**$13,000**
	Subtotal			**$447,400**
Installation	**Mechanical equipment installation**			
	Mixer (for equalization basin)	1	$1,400	$1,400
	Flash mix tank (with mixer)	1	$1,000	$1,000

Table 10-11 (continued)

750,000 gpd				
Category	**Item**	**Quantity**	**Rate**	**Cost**
Installation (cont.)	Flocculation tank (with slow speed mixer)	1	$1,500	$1,500
	Clarifier	1	$70,000	$70,000
	pH control tank	1	$6,000	$6,000
	Acid/NaOH tanks	4	$1,000	$4,000
	pH adjust tank	1	$1,000	$1,000
	Mixer (for pH adjust tank)	1	$500	$500
	Pump station 1	2	$2,000	$4,000
	Pump station 2	2	$2,000	$4,000
	Clarifier pumps	2	$2,000	$4,000
	NaOH pumps	2	$1,500	$3,000
	Acid pumps	2	$2,000	$4,000
	Piping installation			
	Piping/supports	1	$136,300	$136,300
	Insulation and heat tracing	1	$145,400	$145,400
	Control valves/instrumentation	1	$20,000	$20,000
	Civil/structural (includes costs associated with site preparation and grading)			
	Equipment foundations			
	Clarifier/overflow tank	1	$59,000	$59,000
	Clarifier pumps	1	$3,500	$3,500
	Flash mix tank (with mixer)	1	$1,300	$1,300
	Flocculation tank (with slow speed mixer)	1	$6,200	$6,200
	pH control tank	1	$5,300	$5,300
	Acid/NaOH tanks and pumps	1	$14,000	$14,000
	pH adjust tank	1	$6,200	$6,200
	Equalization basin	1	$257,700	$257,700
	Equipment structural support			
	Pump station 1 platform	1	$4,000	$4,000
	Pump station 2 platform	1	$8,000	$8,000
	Electrical and process control			
	Power/equipment	1	$68,400	$68,400

Table 10-11 (continued)

750,000 gpd				
Category	**Item**	**Quantity**	**Rate**	**Cost**
Installation (cont.)	Control/instrumentation	1	$63,500	$63,500
	Software	1	$28,000	$28,000
	Subtotal			**$931,200**
Indirect costs	Temporary facilities (1%)			$13,800
	Spare parts (1.5%)			$20,700
	Engineering procurement and contract management (12%)			$165,400
	Commissioning (3%)			$41,400
	Owner team (10%)			$137,900
	Subtotal			**$379,200**
Total costs	Total direct and indirect costs			$1,757,700
	Contingency (20%)			$351,500
	Total Project Cost			**$2,109,300**

2,000,000 gpd				
Category	**Item**	**Quantity**	**Rate**	**Cost**
Major equipment	Mixer (for equalization basin)	1	$110,000	$110,000
	Flash mix tank (with mixer)	1	$25,500	$25,500
	Flocculation tank (with slow speed mixer)	1	$96,400	$96,400
	Clarifier	1	$238,000	$238,000
	pH control tank	1	$47,400	$47,400
	Acid/NaOH tanks	4	$10,000	$40,000
	pH adjust tank	1	$74,900	$74,900
	Mixer (for pH adjust tank)	1	$16,000	$16,000
	Pump station 1	2	$9,000	$18,000
	Pump station 2	2	$9,500	$19,000
	Clarifier pumps	2	$5,500	$11,000
	NaOH pumps	2	$8,500	$17,000
	Acid pumps	2	$7,500	$15,000
	Total freight			**$21,800**
	Subtotal			**$750,000**

Table 10-11 (continued)

2,000,000 gpd				
Category	**Item**	**Quantity**	**Rate**	**Cost**
Installation	**Mechanical equipment installation**			
	Mixer (for equalization basin)	1	$2,000	$2,000
	Flash mix tank (with mixer)	1	$1,000	$1,000
	Flocculation tank (with slow speed mixer)	1	$1,500	$1,500
	Clarifier	1	$102,000	$102,000
	pH control tank	1	$12,000	$12,000
	Acid/NaOH tanks	4	$10,000	$40,000
	pH adjust tank	1	$1,200	$1,200
	Mixer (for pH adjust tank)	1	$500	$500
	Pump station 1	2	$2,500	$5,000
	Pump station 2	2	$2,500	$5,000
	Clarifier pumps	2	$1,500	$3,000
	NaOH pumps	2	$2,000	$4,000
	Acid pumps	2	$2,000	$4,000
	Piping installation			
	Piping/supports	1	$127,100	$127,100
	Insulation and heat tracing	1	$153,000	$153,000
	Control valves/instrumentation	1	$63,500	$63,500
	Civil/structural (includes costs associated with site preparation and grading)			
	Equipment foundations			
	Reactor clarifier/overflow tank	1	$224,800	$224,800
	Clarifier pumps	1	$7,000	$7,000
	Flash mix tank (with mixer)	1	$2,800	$2,800
	Flocculation tank (with slow speed mixer)	1	$13,000	$13,000
	pH control tank	1	$10,500	$10,500
	Acid/NaOH tanks and pumps	1	$17,500	$17,500
	pH adjust tank	1	$13,000	$13,000
	Equalization basin	1	$508,300	$508,300
	Equipment structural support			
	Pump station 1 platform	1	$6,000	$6,000

Table 10-11 (continued)

2,000,000 gpd				
Category	**Item**	**Quantity**	**Rate**	**Cost**
Installation (cont.)	Pump station 2 platform	1	$8,000	$8,000
	Electrical and process control			
	Power/equipment	1	$92,100	$92,100
	Control/instrumentation	1	$63,500	$63,500
	Software	1	$28,000	$28,000
	Subtotal			**$1,519,300**
Indirect costs	Temporary facilities (1%)			$22,700
	Spare parts (1.5%)			$34,000
	Engineering procurement and contract management (12%)			$272,300
	Commissioning (3%)			$68,100
	Owner team (10%)			$226,900
	Subtotal			**$624,100**
Total costs	Total direct and indirect costs			$2,893,400
	Contingency (20%)			$578,700
	Total Project Cost			**$3,472,000**

Table 10-12

Design Specifications for Multimedia Filtration Model Treatment Systems

Item	Type	150,000 gpd		500,000 gpd		2,000,000 gpd		7,500,000 gpd		20,000,000 gpd	
		Number	Size	Number	Size	Number	Size	Number	Size	Number	Size
Pump station 1	Horizontal split	2 pumps	1.5 HP	2 pumps	5 HP	2 pumps	20 HP	2 pumps	25 HP	2 pumps	60 HP
Pump station 2	Diaphragm/ Vertical turbine (a)	2 pumps	3 HP	2 pumps	3 HP	2 pumps	1 HP	2 pumps	3 HP	2 pumps	3 HP
Filter backwash pump	Vertical turbine	2	1.5 HP	2	3 HP	2	10 HP	2	10 HP	2	20 HP
Sump 1	Concrete	1	450 ft^3	1	800 ft^3	1	3,000 ft^3	1	3,000 ft^3	1	6,000 ft^3
Filter backwash surge basin	Concrete	1	450 ft^3	1	800 ft^3	1	3,000 ft^3	1	3,000 ft^3	1	6,000 ft^3
Filtration system	Sand pressure	2	6 ft diameter × 9 ft side/ 7.5 HP	2	8 ft diameter × 9 ft side/ 7.5 HP	2	12 ft diameter × 9 ft side/ 20 HP	8	12 ft diameter × 9 ft side/ 20 HP	8	16' diam. × 9' side/ 60 HP

(a) Diaphragm pumps (150,000 gpd - 500,000 gpd); vertical turbine pumps (2,000,000 - 20,000,000 gpd).

Table 10-13

Estimated Investment Costs for Multimedia Filtration Model Treatment Systems (150,000 - 20,000,000 gallons per day)

150,000 gpd				
Category	**Item**	**Quantity**	**Rate**	**Cost**
Major equipment	Filters	2	$100,000	$200,000
	Pump station 1	2	$1,500	$3,000
	Pump station 2	2	$2,200	$4,400
	Filter backwash pumps	2	$3,000	$6,000
	Total freight			**$6,400**
	Subtotal			**$219,800**
Installation	**Mechanical equipment installation**			
	Filters	2	$11,000	$22,000
	Pump station 1	2	$1,500	$3,000
	Pump station 2	2	$2,000	$4,000
	Filter backwash pumps	2	$1,500	$3,000
	Piping installation			
	Piping/supports	1	$87,800	$87,800
	Insulation and heat tracing	1	$116,100	$116,100
	Control valves/instrumentation	1	$14,600	$14,600
	Civil/structural (includes costs associated with site preparation and grading)			
	Equipment foundations			
	Filtration plant	1	$81,900	$81,900
	Sump 1	1	$19,000	$19,000
	Filter backwash surge basin	1	$19,000	$19,000
	Equipment structural support			
	Pump station 1 platform	1	$3,500	$3,500
	Pump station 2 platform	1	$4,000	$4,000
	Filter backwash pumps	1	$4,000	$4,000
	Buildings			
	Filtration plant	1	$24,500	$24,500

Table 10-13 (continued)

150,000 gpd				
Category	**Item**	**Quantity**	**Rate**	**Cost**
Installation (cont.)	**Electrical and process control**			
	Power/equipment	1	$43,600	$43,600
	Control/instrumentation	1	$40,600	$40,600
	Building services	1	$5,100	$5,100
	Software	1	$30,000	$30,000
	Subtotal			**$525,700**
Indirect costs	Temporary facilities (1%)			$7,500
	Spare parts (1.5%)			$11,200
	Engineering procurement and contract management (12%)			$89,500
	Commissioning (3%)			$22,400
	Owner team (10%)			$74,600
	Subtotal			**$205,200**
Total costs	Total direct and indirect costs			$950,500
	Contingency (20%)			$190,100
	Total Project Cost			**$1,140,600**

500,000 gpd				
Category	**Item**	**Quantity**	**Rate**	**Cost**
Major equipment	Filters	2	$105,000	$210,000
	Pump station 1	2	$5,000	$10,000
	Pump station 2	2	$3,500	$7,000
	Filter backwash pumps	2	$5,000	$10,000
	Total freight			**$7,100**
	Subtotal			**$244,100**
Installation	**Mechanical equipment installation**			
	Filters	2	$13,000	$26,000
	Pump station 1	2	$2,000	$4,000
	Pump station 2	2	$2,000	$4,000
	Filter backwash pumps	2	$1,500	$3,000

Table 10-13 (continued)

500,000 gpd				
Category	**Item**	**Quantity**	**Rate**	**Cost**
Installation (cont.)	**Piping installation**			
	Piping/supports	1	$121,600	$121,600
	Insulation and heat tracing	1	$118,000	$118,000
	Control valves/instrumentation	1	$17,400	$17,400
	Civil/structural (includes costs associated with site preparation and grading)			
	Equipment foundations			
	Filtration plant	1	$97,800	$97,800
	Sump 1	1	$22,000	$22,000
	Filter backwash surge basin	1	$22,000	$22,000
	Equipment structural support			
	Pump station 1 platform	1	$7,000	$7,000
	Pump station 2 platform	1	$4,000	$4,000
	Filter backwash pumps	1	$4,000	$4,000
	Buildings			
	Filtration plant	1	$28,000	$28,000
	Electrical and process control			
	Power/equipment	1	$43,600	$43,600
	Control/instrumentation	1	$40,600	$40,600
	Building services	1	$5,800	$5,800
	Software	1	$30,000	$30,000
	Subtotal			**$598,800**
Indirect costs	Temporary facilities (1%)			$8,000
	Spare parts (1.5%)			$12,600
	Engineering procurement and contract management (12%)			$101,200
	Commissioning (3%)			$25,300
	Owner team (10%)			$84,300
	Subtotal			**$231,800**
Total costs	Total direct and indirect costs			$1,074,700
	Contingency (20%)			$214,900
	Total Project Cost			**$1,289,600**

Table 10-13 (continued)

2,000,000 gpd				
Category	**Item**	**Quantity**	**Rate**	**Cost**
Major equipment	Filters	2	$107,500	$215,000
	Pump station 1	2	$9,000	$18,000
	Pump station 2	2	$1,500	$3,000
	Filter backwash pumps	2	$9,000	$18,000
	Total freight			**$7,600**
	Subtotal			**$261,600**
Installation	**Mechanical equipment installation**			
	Filters	2	$12,000	$24,000
	Pump station 1	2	$2,500	$5,000
	Pump station 2	2	$1,500	$3,000
	Filter backwash pumps	2	$2,000	$4,000
	Piping installation			
	Piping/supports	1	$197,400	$197,400
	Insulation and heat tracing	1	$122,700	$122,700
	Control valves/instrumentation	1	$28,500	$28,500
	Civil/structural (includes costs associated with site preparation and grading)			
	Equipment foundations			
	Filtration plant	1	$212,300	$212,300
	Sump 1	1	$53,200	$53,200
	Filter backwash surge basin	1	$53,200	$53,200
	Equipment structural support			
	Pump station 1 platform	1	$10,500	$10,500
	Pump station 2 platform	1	$4,000	$4,000
	Filter backwash pumps	1	$8,000	$8,000
	Buildings			
	Filtration plant	1	$60,000	$60,000
	Electrical and process control			
	Power/equipment	1	$68,800	$68,800
	Control/instrumentation	1	$44,400	$44,400
	Building services	1	$12,500	$12,500
	Software	1	$32,000	$32,000
	Subtotal			**$943,500**

Table 10-13 (continued)

2,000,000 gpd				
Category	**Item**	**Quantity**	**Rate**	**Cost**
Indirect costs	Temporary facilities (1%)			$12,100
	Spare parts (1.5%)			$18,100
	Engineering procurement and contract management (12%)			$144,600
	Commissioning (3%)			$36,200
	Owner team (10%)			$120,500
	Subtotal			**$331,400**
Total costs	Total direct and indirect costs			$1,536,500
	Contingency (20%)			$307,300
	Total Project Cost			**$1,843,800**

7,500,000 gpd				
Category	**Item**	**Quantity**	**Rate**	**Cost**
Major equipment	Filters	8	$107,500	$860,000
	Pump station 1	2	$9,000	$18,000
	Pump station 2	2	$5,000	$10,000
	Filter backwash pumps	2	$9,000	$18,000
	Total freight			**$27,200**
	Subtotal			**$933,200**
Installation	**Mechanical equipment installation**			
	Filters	8	$12,000	$96,000
	Pump station 1	2	$2,500	$5,000
	Pump station 2	2	$2,000	$4,000
	Filter backwash pumps	2	$2,500	$5,000
	Piping installation			
	Piping/supports	1	$319,500	$319,500
	Insulation and heat tracing	1	$137,700	$137,700
	Control valves/instrumentation	1	$45,600	$45,600
	Civil/structural (includes costs associated with site preparation and grading)			
	Equipment foundations			

Table 10-13 (continued)

7,500,000 gpd				
Category	**Item**	**Quantity**	**Rate**	**Cost**
Installation (cont.)	Filtration plant	1	$337,200	$337,200
	Sump 1	1	$53,200	$53,200
	Filter backwash surge basin	1	$53,200	$53,200
	Equipment structural support			
	Pump station 1 platform	1	$10,500	$10,500
	Pump station 2 platform	1	$4,000	$4,000
	Filter backwash pumps	1	$8,000	$8,000
	Buildings			
	Filtration plant	1	$95,000	$95,000
	Electrical and process control			
	Power/equipment	1	$130,300	$130,300
	Control/instrumentation	1	$63,500	$63,500
	Building services	1	$19,800	$19,800
	Software	1	$42,000	$42,000
	Subtotal			**$1,429,500**
Indirect costs	Temporary facilities (1%)			$23,600
	Spare parts (1.5%)			$35,400
	Engineering procurement and contract management (12%)			$283,500
	Commissioning (3%)			$70,900
	Owner team (10%)			$236,300
	Subtotal			**$649,700**
Total costs	Total direct and indirect costs			$3,012,400
	Contingency (20%)			$602,500
	Total Project Cost			**$3,614,900**

Table 10-13 (continued)

20,000,000 gpd				
Category	**Item**	**Quantity**	**Rate**	**Cost**
Major equipment	Filters	8	$107,500	$860,000
	Pump station 1	2	$25,000	$50,000
	Pump station 2	2	$5,000	$10,000
	Filter backwash pumps	2	$10,000	$20,000
	Total freight			**$28,200**
	Subtotal			**$968,200**
Installation	**Mechanical equipment installation**			
	Filters	8	$12,000	$96,000
	Pump station 1	2	$4,000	$8,000
	Pump station 2	2	$2,000	$4,000
	Filter backwash pumps	2	$4,000	$8,000
	Piping installation			
	Piping/supports	1	$525,300	$525,300
	Insulation and heat tracing	1	$152,500	$152,500
	Control valves/instrumentation	1	$73,600	$73,600
	Civil/structural (includes costs associated with site preparation and grading)			
	Equipment foundations			
	Filtration plant	1	$466,700	$466,700
	Sump 1	1	$83,600	$83,600
	Filter backwash surge basin	1	$83,600	$83,600
	Equipment structural support			
	Pump station 1 platform	1	$14,000	$14,000
	Pump station 2 platform	1	$14,000	$14,000
	Filter backwash pumps	1	$10,000	$10,000
	Buildings			
	Filtration plant	1	$132,000	$132,000
	Electrical and process control			
	Power/equipment	1	$177,100	$177,100
	Control/instrumentation	1	$63,500	$63,500
	Building services	1	$27,500	$27,500
	Software	1	$42,000	$42,000
	Subtotal			**$1,981,300**

Table 10-13 (continued)

20,000,000 gpd				
Category	**Item**	**Quantity**	**Rate**	**Cost**
Indirect costs	Temporary facilities (1%)			$29,500
	Spare parts (1.5%)			$44,200
	Engineering procurement and contract management (12%)			$353,900
	Commissioning (3%)			$88,500
	Owner team (10%)			$295,000
	Subtotal			**$811,100**
Total costs	Total direct and indirect costs			$3,760,600
	Contingency (20%)			$752,100
	Total Project Cost			**$4,512,700**

Table 10-14

Cost Factors to Determine Investment Costs

Category	Item	Cost Factor (% of equipment cost)
Direct costs (a)	Equipment cost	100
	Freight	3
	Installation labor	40
	Site preparation	15
	Equipment foundations and structural support	40
	Buildings	15
	Piping	35
	Electrical and process control	30
	Subtotal	278
Indirect costs	Temporary facilities (1%) (b)	3
	Spare parts (1.5%) (b)	4
	Engineering procurement and contract management (12%) (b)	34
	Commissioning and start-up (3%) (b)	8
	Owner team (10%) (b)	28
	Subtotal (27.5% of subtotal of direct costs)	77
Total project cost		**355**

(a) Direct cost factors are based on actual wastewater treatment installations in the iron and steel industry and include contingency costs.
(b) Percentage of subtotal of direct costs; standard factors used by engineering and design firm.

Table 10-15

Iron and Steel Investment Cost Equations

Equipment	Investment Cost Equation	Applicable Subcategory	Range of Validity	Source(s)
Biological nitrification (chemicals include soda ash, phosphoric acid, polymer, and defoaming agent)	($): 22,013 × flow (gpm)	Cokemaking	50 to 500 gpm	Capital cost survey
Biological treatment upgrade	($): 1,575.5 × flow (gpm)	Cokemaking	30 to 500 gpm	Capital cost survey, trade association
Tar removal	($): 2,491 × flow (gpm)	Cokemaking	50 to 200 gpm	Vendor, site information
Flow equalization tank (prior to ammonia stripping and biological nitrification)	($): 1440 × flow (gpm) = V (gal) If V is ≤ 250,000 gal, then investment ($) = 1.09 × 250,000 ≤ 500,000 gal, then investment ($) = 1.09 × 500,000 ≤ 750,000 gal, then investment ($) = 1.09 × 750,000 ≤ 1,000,000 gal, then investment ($) = 1.09 × 1,000,000 ≤ 1,250,000 gal, then investment ($) = 1.09 × 1,250,000	Cokemaking	250,000 to 1,250,000 gallons	Capital cost survey, vendor information
Free and fixed ammonia still	($): 11,749 × flow (gpm) + 513,178	Cokemaking	40 to 400 gpm	Capital cost survey, site information, trade association information
Clarification of activated sludge	($): 782.4 × flow rate (gpm)	Cokemaking	20 to 90 ft diameter	Capital cost survey, vendor information

Table 10-15 (continued)

Equipment	Investment Cost Equation	Applicable Subcategory	Range of Validity	Source(s)
Heat exchanger	($): 933 × flow rate (gpm)	Cokemaking	20 to 300 gpm of hot water flow; influent temp: 140°F ; effluent temp: 80°F	Capital cost survey, vendor information
Sludge thickening of activated sludge and metal hydroxides	($): 168.3 × flow (gpm) + 213,320 where flow is through thickener	Cokemaking Steel finishing	0.5 to 1,390 gpm	Capital cost survey, vendor information
Belt filter press	($): 814 × flow (gpm) where flow is through biological nitrification	Cokemaking	4 to 14 tons/day of wet sludge	Capital cost survey, vendor information
Cyanide precipitation (chemicals include ferric sulfate, sulfuric acid, polymer, and sodium hydroxide)	($): 762.36 × flow (gpm) + 113,338 Sulfuric acid feed system: 88.816 × flow (gpm) + 35,692 Ferric sulfate feed system: 79.059 × flow (gpm) + 23,332 Polymer feed system: 68.132 × flow (gpm) + 12,061 Sodium hydroxide feed system: 14.306 × flow (gpm) + 35,927	Cokemaking	40 to 400 gpm	Capital cost survey, vendor information
Breakpoint chlorination of cokemaking wastewater (including sodium hypochlorite, sodium hydroxide, polymer, and sodium bisulfite feed systems)	($): 2,927.5 × flow (gpm) + 2,000,000	Cokemaking	88 to 2,340 gpm	Engineering and design firm
Sludge thickening for iron-cyanide sludge	($): 63,261 × flow (gpm) + 144,799	Cokemaking	40 to 400 gpm	Capital cost survey, vendor information
Plate and frame filter press	($): 117.6 × flow (gpm) + 47,553 (cokemaking) ($): 1,340.8 × flow (gpm) + 47,553 (steel finishing)	Cokemaking Steel finishing	104 to 1,390 gpm	Capital cost survey, vendor information

Table 10-15 (continued)

Equipment	Investment Cost Equation	Applicable Subcategory	Range of Validity	Source(s)
Multimedia filtration	($): 488.19 × flow (gpm) + 1,134,220 (50 to 5,200 gpm) 103.43 × flow (gpm) + 3,000,000 (> 5,200 gpm)	Cokemaking Sintering Ironmaking Integrated steelmaking Integrated and stand-alone hot forming Non-Integrated steelmaking and hot forming Other operations	50 to >5,200 gpm	Engineering and design firm
Granular activated carbon	($): 950.31 × flow (gpm) + 848,478	Cokemaking	88 to 2,340 gpm	Engineering and design firm
Chemical precipitation	($): 1,384.7 × flow (gpm) + 1,503,370 (ironmaking) ($): 1,545.5 × flow (gpm) + 951,003 (integrated steelmaking) ($): 748.02 × flow (gpm) + 162,686 (steel finishing)	Ironmaking Integrated steelmaking Steel finishing	104 to 1,390 gpm	Engineering and design firm (ironmaking, integrated steelmaking), vendor information (steel finishing)
Breakpoint chlorination of blast furnace and sintering wastewater	($): 2,729.4 × flow (gpm) + 1,000,000	Ironmaking	104 to 1,390 gpm	Engineering and design firm
Vacuum filtration	($): 1.13 × (sludge generation (lbs/day)) + 151,037 where sludge generation is 26 lbs/day/gpm	Ironmaking	104 to 1,390 gpm	Capital cost survey, vendor information
Carbon dioxide injection system	($): 101,511 < 2,400 gpm ($): 106,125 2,400 to 5,600 gpm ($): 115,353 > 5,600 gpm	Integrated steelmaking	< 2,400 to > 5,600 gpm	Vendor, site information

Table 10-15 (continued)

Equipment	Investment Cost Equation	Applicable Subcategory	Range of Validity	Source(s)
Cooling tower	($): 32.17 × flow (gpm) + 234,335	Ironmaking Integrated steelmaking Integrated and stand-alone hot forming Non-Integrated steelmaking and hot forming	500 to 60,000 gpm	Capital cost survey, vendor information
Recycle pump station	($): 11.58 × flow (gpm) + 123,145	Ironmaking Integrated steelmaking Integrated and stand-alone hot forming Non-Integrated steelmaking and hot forming	6,900 to 35,000 gpm	Capital cost survey, vendor information
Lime feed system	($): 50.591 × flow (gpm) + 27,665	Sintering Ironmaking Steel finishing	104 to 1,390 gpm	Vendor information
Inclined plate clarification	($): 508.3 × flow (gpm) + 33,538	Steel finishing	50 to 400 gpm	Capital cost survey, vendor information

Table 10-16

Iron and Steel Operating and Maintenance (O&M) Cost Equations

Equipment	Cost Equation	Applicable Subcategory	Range of Validity
Biological nitrification (chemicals include soda ash, phosphoric acid, polymer, and defoaming agent)	Electrical ($/yr): 810 × flow (gpm) Chemicals ($/yr): 639 × flow (gpm) O&M labor ($/yr): DPY × HPD × $29.67/hr = 260,000 Maintenance equipment and vendors (a) ($/yr): 0.06 × investment cost Monitoring ($/yr): 60,000 Sludge disposal ($/yr): cost included with belt filter O&M	Cokemaking	50 to 500 gpm
Biological treatment upgrade	Electrical ($/yr): 288 × flow (gpm) Chemicals ($/yr): — Soda ash: 164 × flow (gpm) — Phosphoric acid: 19.4 × flow (gpm) O&M labor ($/yr): 0, upgrade includes costs for automated control systems, no added O&M is expected Maintenance equipment and vendors (a) ($/yr): 0.06 × investment cost	Cokemaking	30 to 500 gpm

Abbreviations:

HPD - 24 hours of operation per day.
DPY - 365 days of operation per year.

Table 10-16 (continued)

Equipment	Cost Equation	Applicable Subcategory	Range of Validity
Tar removal	Electrical ($/yr): (0.0158 × flow (gpm) + 2.3551)kW × HPD × DPY × $0.047/kWh Chemicals ($/yr): 0 O&M labor ($/yr): 0.5 hrs/day × DPY × $29.67/hr = 5,415 Maintenance equipment and vendors (a) ($/yr): 0.06 × investment cost	Cokemaking	50 to 200 gpm
Flow equalization tank (prior to ammonia stripping and biological nitrification)	Electrical (b) ($/yr): (0.092 HP/gpm × flow (gpm)) × 0.7456 kW/HP × DPY × HPD × $0.047/kWh where flow is ammonia still flow or biological treatment system flow (as applicable) Chemicals ($/yr): 0 O&M labor ($/yr): DPY × 1.5 hrs/day × $29.67/hr = 16,250 Maintenance equipment and vendors (c) ($/yr): 5,534 × (flow (gpm)/100 gpm) where flow is ammonia still flow or biological treatment system flow (as applicable)	Cokemaking	250,000 to 1,250,000 gallons

Abbreviations:

HPD - 24 hours of operation per day.
DPY - 365 days of operation per year.

Table 10-16 (continued)

Equipment	Cost Equation	Applicable Subcategory	Range of Validity
Free and fixed ammonia still	Electrical ($/yr): 82 x flow (gpm) Steam ($/yr): — 1,581 x flow (gpm) —3,215 x flow (gpm) Chemicals ($/yr): — Caustic soda: 1,404 × flow (gpm) O&M labor ($/yr): DPY × 6 hrs/day x $29.67/hr = 70,000 Maintenance equipment and vendors ($/yr) (a): 0.06 × investment cost Sampling/monitoring ($/yr): DPY × $52/day = 18,980	Cokemaking	40 to 400 gpm
Clarification of activated sludge	Electrical, chemical, O&M labor, maintenance equipment, and vendor costs included with biological nitrification O&M	Cokemaking	20 to 90 ft diameter
Heat exchanger	Electrical (b) ($/yr): (0.0746 × flow (gpm)) kWh × HPD × DPY × $0.047/kWh O&M labor (d) ($/yr): 1 hr/wk × 52 wk/yr × $29.67/hr = 1,540 Maintenance equipment and vendors (a) ($/yr): 0.06 × investment cost	Cokemaking	20 to 300 gpm of hot water flow; Influent temp: 140°F; Effluent temp: 80°F

Abbreviations:

HPD - 24 hours of operation per day.
DPY - 365 days of operation per year.

Table 10-16 (continued)

Equipment	Cost Equation	Applicable Subcategory	Range of Validity
Sludge thickening of activated sludge and metal hydroxides	Electrical (b) ($/yr): (Flow (gpm)/35 × 5) × 0.7456 kW/HP × HPD × DPY × $0.047/kWh where flow is 4% of flow to the clarifier Chemicals ($/yr): (costs included with biological nitrification for activated sludge; costs included with chemical precipitation and clarification for metal hydroxides) O&M labor ($/yr): DPY/2 × 1 hour/day × $29.67/hr = 5,415 Maintenance equipment and vendors (a) ($/yr): 0.06 × investment cost Sludge disposal ($/yr): (applies to PSES-3 and PSES-4 only, cokemaking subcategory; cost included with belt filter O&M)	Cokemaking Steel finishing	0.5 to 1,390 gpm
Belt filter press	Electrical, chemical, O&M labor, maintenance equipment, and vendor costs included with biological nitrification O&M Sludge disposal ($/yr): 24 lbs/day/gpm × flow (gpm) × DPY × $0.0025/lb	Cokemaking	4 to 14 tons/day of wet sludge

Abbreviations:

HPD - 24 hours of operation per day.
DPY - 365 days of operation per year.

Table 10-16 (continued)

Equipment	Cost Equation	Applicable Subcategory	Range of Validity
Cyanide precipitation (includes sludge thickener and filter press O&M costs; chemicals include ferric sulfate, sulfuric acid, polymer, and sodium hydroxide)	Electrical ($/yr): 6.67 × flow (gpm) Chemicals ($/yr): 989.75 × flow (gpm) (all chemicals) O&M labor ($/yr): 1,343.6 × flow (gpm) Maintenance equipment and vendors ($/yr): 250 × flow (gpm) Monitoring ($/yr): 2,000	Cokemaking	40 to 400 gpm
Sludge thickening for iron-cyanide sludge	All O&M costs are included with cyanide precipitation	Cokemaking	40 to 400 gpm
Plate and frame filter press	Electrical ($/yr): 1,200 Chemicals ($/yr): (costs are included in O&M for cyanide precipitation for cokemaking; costs are included in O&M for chemical feed systems for steel finishing) O&M labor ($/yr): $29.67/hr x 3 hrs/day x DPY = 32,490 Maintenance equipment and vendors (a) ($/yr): 0.06 × investment cost	Cokemaking Steel finishing	40 to 400 gpm
Polymer feed system	All O&M costs are included where polymer is used.	Cokemaking Ironmaking Integrated steelmaking Steel finishing	40 to 1,390 gpm
Ferric sulfate feed system	All O&M costs are included with cyanide precipitation.	Cokemaking	40 to 400 gpm
Sodium hydroxide feed system	All O&M costs are included where sodium hydroxide is used.	Cokemaking Ironmaking Integrated steelmaking	40 to 400 gpm

Abbreviations:

HPD - 24 hours of operation per day.
DPY - 365 days of operation per year.

Table 10-16 (continued)

Equipment	Cost Equation	Applicable Subcategory	Range of Validity
Sulfuric acid feed system	All O&M costs are included where sulfuric acid is used.	Ironmaking Integrated Steelmaking	40 to 400 gpm
Breakpoint chlorination	Electrical (b) ($/yr): 90.6 × flow (gpm) Chemicals (e) ($/yr): — Sodium hypochlorite: 6.43 × flow (gpm) × (mg/L CN × 8.5 + mg/L NH4 × 7.4) — Sodium hydroxide: 7.9 × flow (gpm) — Sulfuric acid: 83.6 × flow (gpm) — Sodium bisulfite: 1.82 × flow (gpm) × (mg/L CN × 1.7 + mg/L NH4 × 1.5) O&M labor ($/yr): 1 hr/shift × 3 shifts/day × DPY × $29.67/hr = 32,490 Maintenance equipment and vendors ($/yr): 250 × flow (gpm) Monitoring ($/yr): 2,000	Cokemaking	88 to 2,340 gpm

Abbreviations:

HPD - 24 hours of operation per day.
DPY - 365 days of operation per year.

Table 10-16 (continued)

Equipment	Cost Equation	Applicable Subcategory	Range of Validity
Multimedia filtration	Electrical (b) ($/yr): [(0.0504 × flow (gpm) + 1.0139] × 8,760 hrs/yr × $0.047/kWh Chemicals ($/yr): 0 O&M Labor ($/yr): 1.5 hrs/day × DPY × $29.67/hr = 16,240 Maintenance equipment and vendors ($/yr) (a): 0.06 × investment cost Monitoring ($/yr): NA	Cokemaking Sintering Ironmaking Integrated steelmaking Integrated and stand-alone hot forming Non-Integrated steelmaking and hot forming Other operations	< 50 gpm to >5,200 gpm
Granular activated carbon	Electrical (b) ($/yr): 9.6 × flow (gpm) Chemicals ($/yr): NA O&M labor ($/yr): 8.13 × flow (gpm) Maintenance equipment and vendors ($/yr): 1228.6 × flow (gpm) Monitoring ($/yr): 60 × flow (gpm)	Cokemaking	88 to 2,340 gpm

Abbreviations:

HPD - 24 hours of operation per day.
DPY - 365 days of operation per year.

Table 10-16 (continued)

Equipment	Cost Equation	Applicable Subcategory	Range of Validity
Chemical precipitation	Electrical (b) ($/yr): [(0.0934 × flow (gpm)) + 0.7763]HP × 0.7456 kW/HP × DPY × HPD × $0.047/kWh Chemicals ($/yr): — Lime flow (gpm) × 1,440 min/day × 0.0004 lbs/gal × DPY × $0.035/lb (ironmaking, steel finishing) — NaOH flow (gpm) × 1,440 min/day × 0.0033 lbs/gal × DPY × $0.15/lb (integrated steelmaking) — Polymer flow (gpm) × 1,440 min/day × 0.00005 lbs/gal × DPY × $0.20/lb (ironmaking, integrated steelmaking) DPY × flow (gpm) × 1,440 min/day × 0.000018 lbs/gal × $0.20/lb (steel finishing) O&M labor ($/yr): 3 shifts/day × 4 hrs/shift × DPY × $29.67/hr = 29,955 Maintenance equipment and vendors (a) ($/yr): 0.06 × investment cost Monitoring ($/yr): NA	Ironmaking Integrated steelmaking Steel finishing	104 to 1,390 gpm

Abbreviations:

HPD - 24 hours of operation per day.
DPY - 365 days of operation per year.

Table 10-16 (continued)

Equipment	Cost Equation	Applicable Subcategory	Range of Validity
Breakpoint chlorination of blast furnace and sintering wastewater	Electrical (b) ($/yr): 79.8 × flow (gpm) Chemicals ($/yr): — Sodium hypochlorite 0.0027 lbs/gal × flow (gpm) × 1,440 min/day × DPY × 1.47 $/lb — Sulfuric acid 0.0006 lbs/gal × flow (gpm × 1,440 min/day × DPY × 0.043 $/lb — Sodium bisulfite (f) (0.00054 lbs/gal) × flow (gpm) × 1440 min/day × DPY × (104 g/mol $NaHSO_3$/ 81 g/mol HSO_3) × $0.325/lb O&M labor ($/yr): 1 hr/shift × 3 shifts/day × DPY × $29.67/hr = $32,490 Maintenance Equipment and Vendors (a) ($/yr): 0.06 × investment cost Monitoring ($/yr): 2,000	Ironmaking	104 to 1,390 gpm

Abbreviations:

HPD - 24 hours of operation per day.
DPY - 365 days of operation per year.

Table 10-16 (continued)

Equipment	Cost Equation	Applicable Subcategory	Range of Validity
Vacuum filtration	Electrical (b) ($/yr): [(0.0002 × (sludge generation (lbs/day)) + 3.491]kW × DPY × HPD × $0.047/kWh Chemicals ($/yr): 234 lbs/day × DPY × $0.21/lb (diatomaceous earth) = 17,936 O&M labor ($/yr): DPY × 3 shifts/day × 4 hr/shift × $29.67/hr = 32,489 Maintenance equipment and vendors (a) ($/yr): 0.06 × investment cost Monitoring ($/yr): 0	Ironmaking	104 to 1,390 gpm
Carbon dioxide injection system	Electrical (b) ($/yr): 181 kWh/day x DPY x $0.047/kWh = 3,105 Chemicals ($/yr): 0.5 lbs/day/gpm x flow (gpm) x $0.081/lb (carbon dioxide) O&M labor ($/yr): DPY × 2 hr/day × 4 hr/shift × $29.67/hr = 21,659 Maintenance equipment and vendors (a) ($/yr): 0.06 × investment cost Monitoring ($/yr): 0	Integrated steelmaking	< 2,400 to > 5,600 gpm

Abbreviations:

HPD - 24 hours of operation per day.
DPY - 365 days of operation per year.

Table 10-16 (continued)

Equipment	Cost Equation	Applicable Subcategory	Range of Validity
Cooling tower	Electrical (b) ($/yr): [((0.035 × flow (gpm))/3.5 gpm/ft) + ((flow (gpm) × 40 feet)/(3,960 × 0.75))] × 0.7456kW/HP × DPY × HPD × $0.047/kWh Chemicals (g) ($/yr): — Biocide: $4.00 × cooling tower flow (gpm) × 10 minutes/1,000 × DPY/2 — Scale inhibitor: 0.02 lbs/day/gpm × cooling tower flow (gpm) × DPY × $0.19/lb O&M labor ($/yr): ((1.5 hrs/day × DPY × $29.67/hr) + (4 persons × 40 hrs/person × $29.67/hr)) = 20,990 Maintenance equipment and vendors (a) ($/yr): 0.06 × investment cost Monitoring ($/yr): 0	Ironmaking Integrated steelmaking Integrated and stand-alone hot forming Non-Integrated steelmaking and hot forming	500 to 60,000 gpm

Abbreviations:

HPD - 24 hours of operation per day.
DPY - 365 days of operation per year.

Table 10-16 (continued)

Equipment	Cost Equation	Applicable Subcategory	Range of Validity
Recycle pump station	Electrical (b) ($/yr): (0.0631 × flow (gpm) + 2.0227)HP × 0.7456 kW/HP × HPD × DPY × $0.047/kWh Chemicals ($/yr): 0 O&M labor ($/yr): 40 hrs/yr × $29.67/hr = 1,191 Maintenance equipment and vendors ($/yr): 0.06 × investment cost Monitoring ($/yr): 0	Integrated and stand-alone hot forming Non-Integrated steelmaking and hot forming	6,900 to 35,000 gpm
Lime feed system	All O&M costs are included in chemical precipitation	Sintering Ironmaking Steel finishing	104 to 1,390 gpm

Abbreviations:

HPD - 24 hours of operation per day.
DPY - 365 days of operation per year.

Table 10-16 (continued)

Equipment	Cost Equation	Applicable Subcategory	Range of Validity
Inclined plate clarification	Electrical (b) ($/yr): 0 Chemicals ($/yr): 0 O&M labor ($/yr): DPY/2 × 1 hr × $29.67/hr = 5,415 Maintenance equipment and vendors (a) ($/yr): 0.06 × investment cost Monitoring ($/yr): 0	Steel finishing	50 to 400 gpm

Notes:

(a) Annual maintenance equipment and vendor costs approximately 6% of investment cost per Perry's Chemical Engineers Handbook, Sixth Edition (Reference 10-3).
(b) Electrical costs calculated from equipment horsepower and operational period.
(c) Assumes annual replacement of recirculation pump.
(d) Estimated from information provided by vendor.
(e) Chemical costs for sodium hypochlorite and sodium bisulfite based on stoichiometric requirements. Sodium hydroxide and sulfuric acid requirements based on sample preservation data.
(f) Bisulfite concentration based on stoichiometric requirement plus 20% excess.
(g) Typical scale inhibitor and biocide concentrations estimated by chemical vendor.
NA - Not applicable.

Abbreviations:

HPD - 24 hours of operation per day.
DPY - 365 days of operation per year.

Table 10-17

Summary of Incremental Costs for the Cokemaking Subcategory (in millions of 1997 dollars)

Option	Investment Cost	Operating and Maintenance Cost	One-Time Cost
BAT-1	26.0	4.6	0.4
BAT-3	67.5	7.2	0.4
PSES-1	6.1	1.5	0.1
PSES-3	23.4	5.0	0.3

Table 10-18

Summary of Incremental Costs for the Ironmaking and Sintering Subcategories (in millions of 1997 dollars)

Options	Investment Cost	Operating and Maintenance Cost	One-Time Cost
BAT-1 and PSES-1 (ironmaking subcategory)	52.6	7.8	0.4
Sintering subcategory	11.0	1.3	0

Table 10-19

Summary of Incremental Costs for the Integrated Steelmaking Subcategory (in millions of 1997 dollars)

Options	Investment Cost	Operating and Maintenance Cost	One-Time Cost
BAT-1 and PSES-1	43.4	8.4	0.3

Table 10-20

Summary of Incremental Costs for the Integrated and Stand-Alone Hot Forming Subcategory (in millions of 1997 dollars)

Option	Investment Cost	Operating and Maintenance Cost	One-Time Cost
Carbon and Alloy Steel Segment			
BAT-1	141.3	19.7	0.2
PSES-1	0.3	0.1	0.1
Stainless Segment (a)			
PSES-1	0.3	0.1	0.1

(a) No sites reported direct discharge of wastewater within the stainless segment.

Table 10-21

Summary of Incremental Costs for the Non-Integrated Steelmaking and Hot Forming Subcategory (in millions of 1997 dollars)

Option	Investment Cost	Operating and Maintenance Cost	One-Time Cost
Carbon and Alloy Steel Segment			
BAT-1	44.4	5.2	1.9
PSES-1	10.8	1.1	0.4
Stainless Steel Segment			
BAT-1	4.0	0.5	0.1
PSES-1	1.0	0.1	0.1

Table 10-22

Summary of Incremental Costs for the Steel Finishing Subcategory (in millions of 1997 dollars)

Option	Investment Cost	Operating and Maintenance Cost	One-Time Cost
Carbon and Alloy Steel Segment			
BAT-1	21.4	4.8	34.5
PSES-1	4.5	1.0	12.6
Stainless Steel Segment			
BAT-1	6.0	1.6	36.9
PSES-1	1.0	0.4	6.0

Table 10-23

Summary of Incremental Costs for the Other Operations Subcategory (in millions of 1997 dollars)

Option	Investment Cost	Operating and Maintenance Cost	One-Time Cost
Direct-Reduced Ironmaking Segment			
BPT	(a)	(a)	(a)
Forging Segment			
BPT	0.1	0.02	0.03

(a) Data aggregation or other masking techniques are insufficient to protect confidential business information.

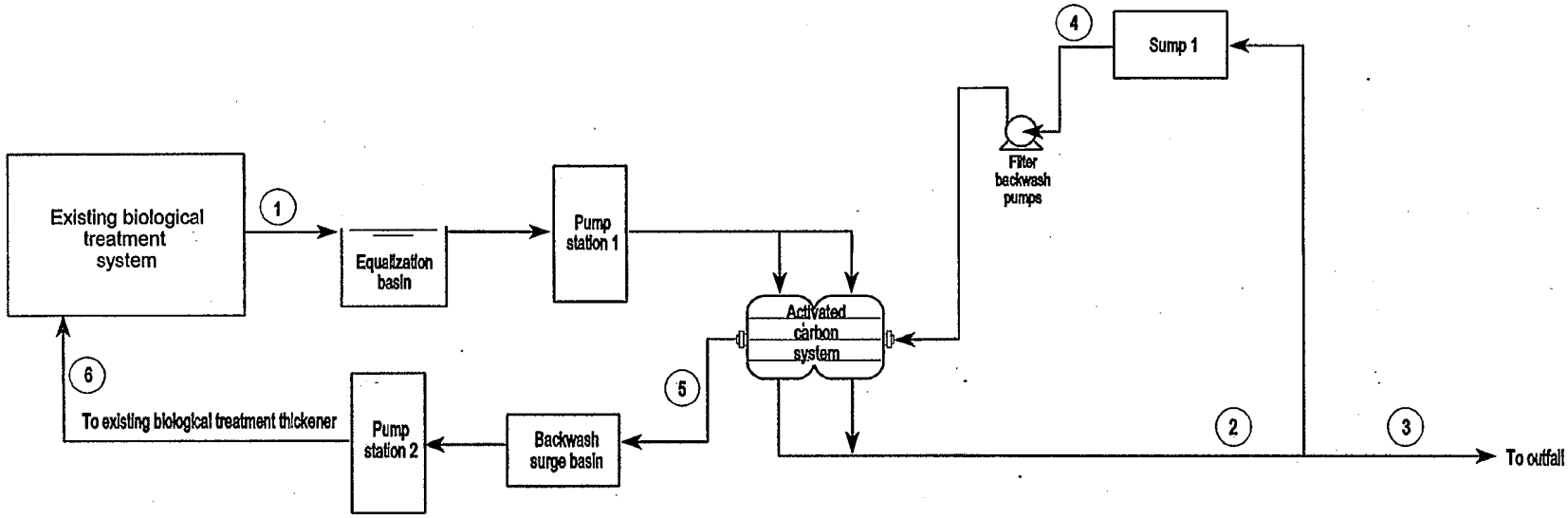

System Flows (gpm)						
Design Influents	1	2	3	4	5	6
100,000 gpd	70	70	52	9 (avg) 225 (max)	9 (avg) 225 (max)	9
400,000 gpd	280	280	250	15 (avg) 350 (max)	15 (avg) 350 (max)	15
2,700,000 gpd	1875	1875	1625	125 (avg) 1500 (max)	125 (avg) 1500 (max)	125

Figure 10-1. Activated Carbon System for By-Products Recovery Cokemaking Wastewater

GAC	10/27/00	EPA

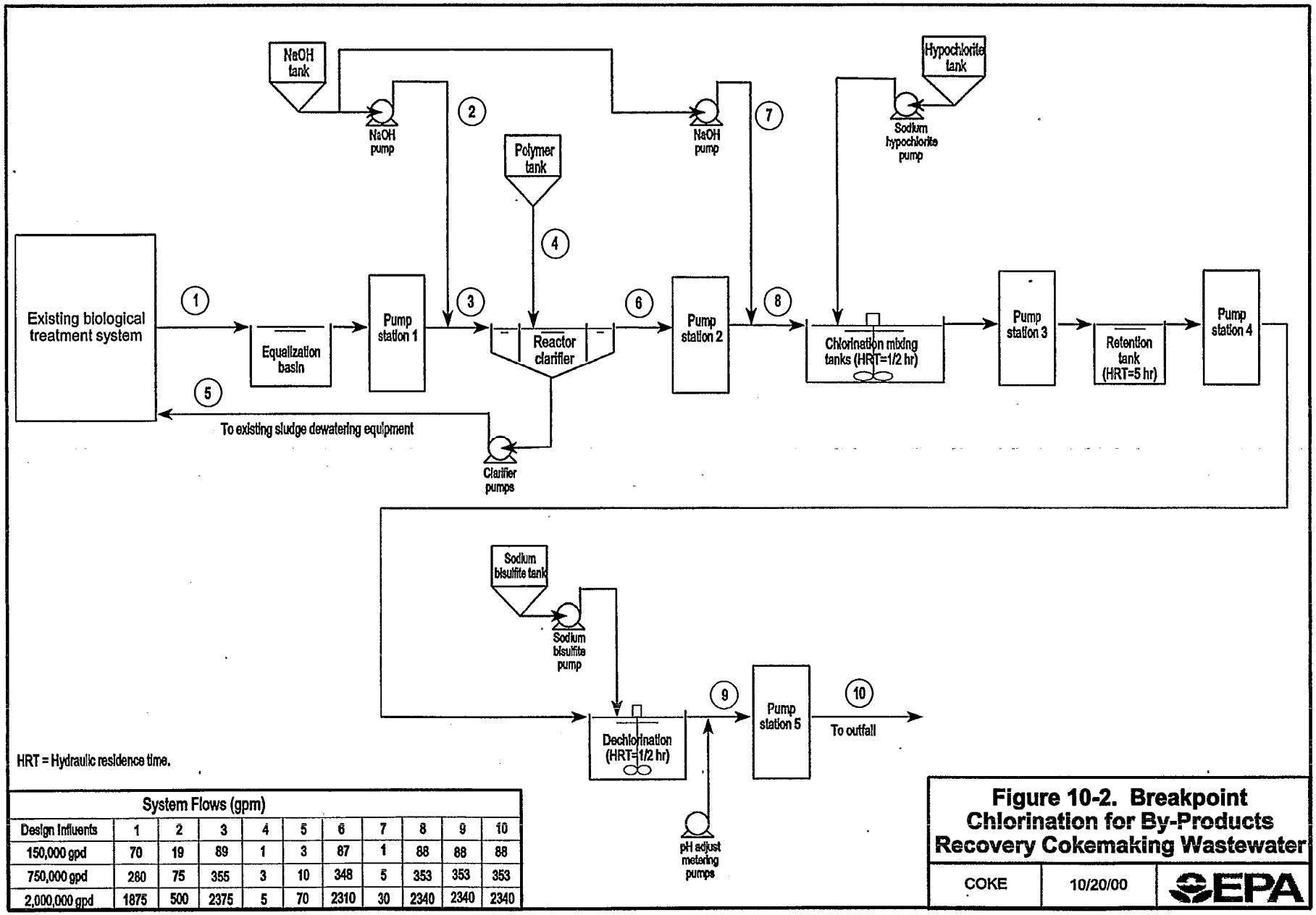

HRT = Hydraulic residence time.

System Flows (gpm)										
Design Influents	1	2	3	4	5	6	7	8	9	10
150,000 gpd	70	19	89	1	3	87	1	88	88	88
750,000 gpd	280	75	355	3	10	348	5	353	353	353
2,000,000 gpd	1875	500	2375	5	70	2310	30	2340	2340	2340

Figure 10-2. Breakpoint Chlorination for By-Products Recovery Cokemaking Wastewater

COKE	10/20/00	EPA

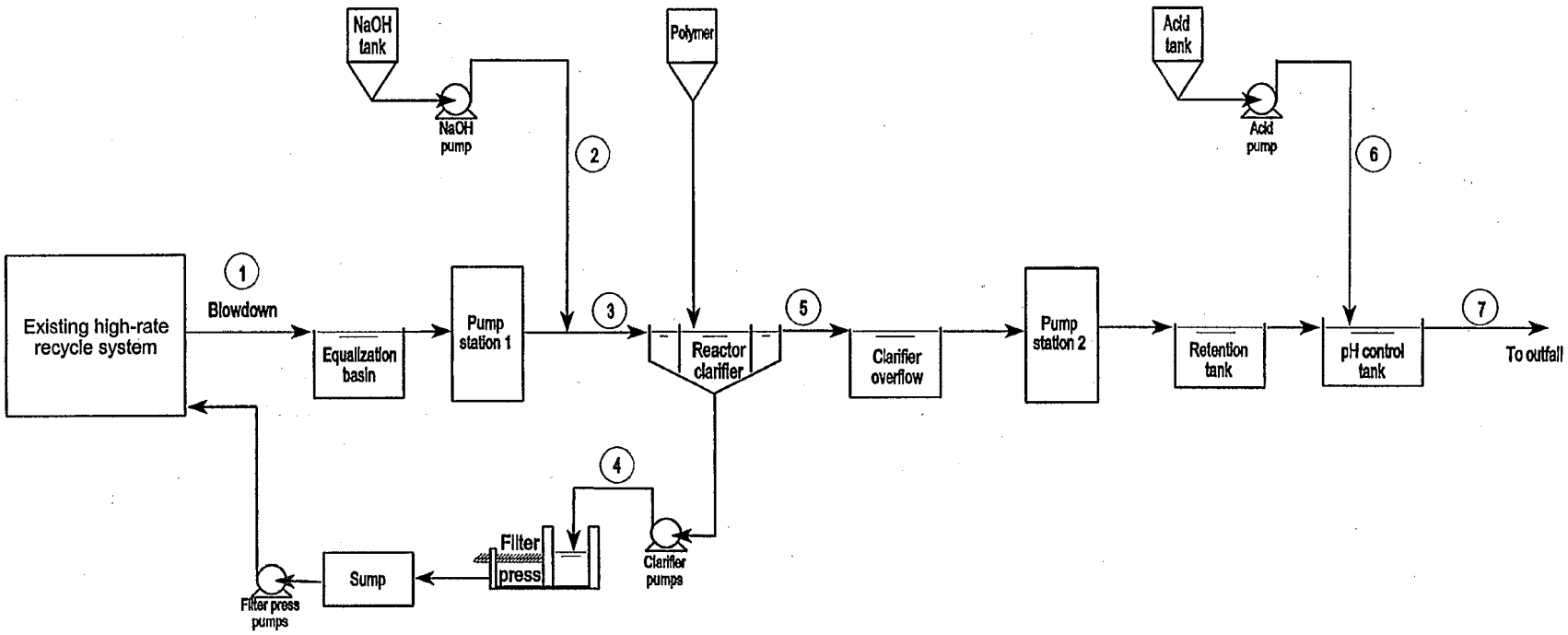

System Flows (gpm)							
Design Influents	1	2	3	4	5	6	7
150,000 gpd	105	30	135	5	130	2	132
750,000 gpd	525	140	665	20	645	10	655
2,000,000 gpd	1390	370	1760	40	1720	30	1750

Figure 10-3. Blowdown Metals Precipitation for Ironmaking Wastewater

IRNMAK	10/20/00	EPA

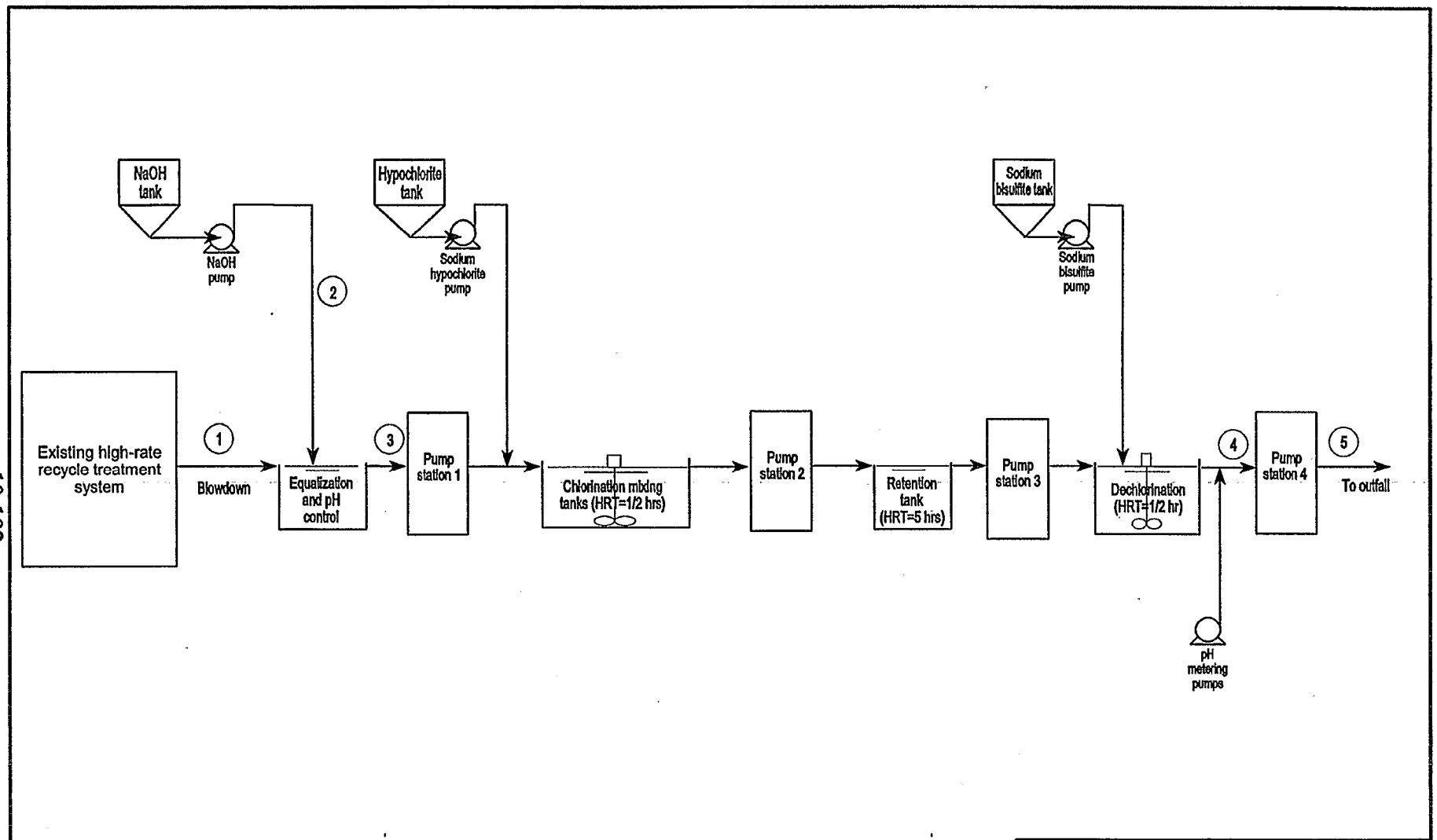

System Flows (gpm)					
Design Influents	1	2	3	4	5
150,000 gpd	105	5	110	110	110
750,000 gpd	525	10	535	535	535
2,000,000 gpd	1390	25	1415	1415	1415

Figure 10-4. Breakpoint Chlorination for Ironmaking Wastewater

IRNMAK | 10/20/00 | EPA

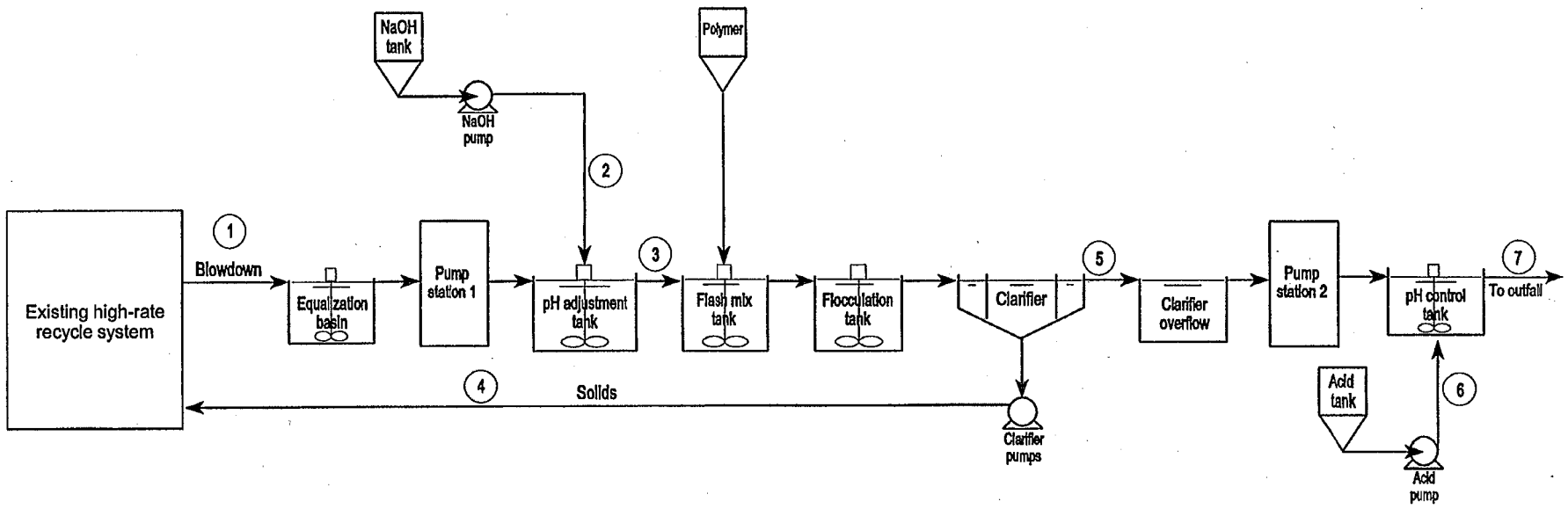

System Flows (gpm)							
Design Influents	1	2	3	4	5	6	7
150,000 gpd	105	30	135	5	130	2	132
750,000 gpd	525	140	665	20	645	10	655
2,000,000 gpd	1390	370	1760	40	1720	30	1750

Figure 10-5. Blowdown Metals Precipitation for Steelmaking Wastewater

STEEL	10/20/00	EPA

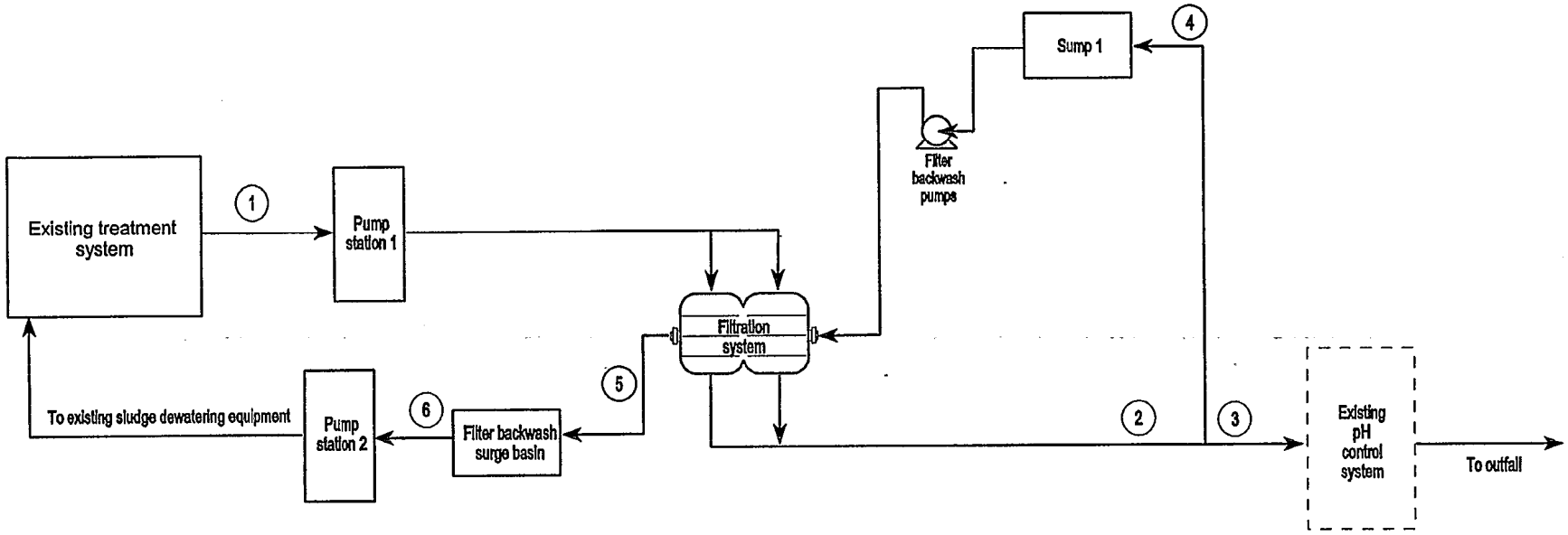

System Flows (gpm)						
Design Influents	1	2	3	4	5	6
150,000 gpd	105	105	95	10 (avg) 226 (max)	10 (avg) 226 (max)	10
500,000 gpd	350	350	333	17 (avg) 402 (max)	17 (avg) 402 (max)	17
2,000,000 gpd	1390	1390	1265	125 (avg) 1500 (max)	125 (avg) 1500 (max)	125
7,500,000 gpd	5200	5200	4870	330 (avg) 1500 (max)	330 (avg) 1500 (max)	330
20,000,000 gpd	13900	13900	13230	670 (avg) 3000 (max)	670 (avg) 3000 (max)	670

Figure 10-6. Filtration of Wastewater from All Subcategories

FILT | 10/22/00 | EPA

SECTION 11

POLLUTANT LOADINGS

This section presents annual pollutant loadings and removal estimates for the iron and steel industry for each regulatory option considered for the final rule for each subcategory. (Regulatory options are described in Section 9.) EPA estimated the pollutant loadings and removals from iron and steel sites to evaluate the effectiveness of the treatment technologies, to estimate benefits gained from removing pollutants discharged from sites, to estimate costs to achieve such reductions, and to evaluate the cost-effectiveness of the regulatory options in reducing the pollutant loadings. Key terms for pollutant loadings and removals are defined below:

- Baseline loadings - Pollutant loadings, in pounds per year (lbs/yr), in iron and steel wastewater being discharged to surface water or to publicly owned treatment works (POTWs) in 1997.

- Treated loadings - Also referred to as post-compliance loadings, they are the estimated pollutant loadings in iron and steel wastewater after implementation of the promulgated rule or regulatory option. EPA calculated these loadings assuming that all iron and steel sites would operate their wastewater treatment and pollution prevention technologies to achieve the option model LTAs and model PNF.

- Pollutant removals - The difference between baseline loadings and treated loadings for each regulatory option.

This section discusses the methodology that EPA used to estimate pollutant loadings and presents the resultant estimated baseline and treated loadings and pollutant removals as follows:

- Section 11.1 discusses the data sources that EPA used to estimate pollutant loadings and removals;

- Section 11.2 discusses the general methodology EPA used to estimate baseline pollutant loadings;

- Section 11.3 discusses the general methodology EPA used to estimate treated pollutant loadings;

- Section 11.4 discusses the general methodology EPA used to estimate pollutant removals;

- Section 11.5 discusses how the costing analysis affects the loadings analysis;
- Section 11.6 presents an example calculation of the baseline and treated pollutant loadings and pollutant removals;
- Sections 11.7 through 11.14 present the specific methodologies used to estimate pollutant loadings and the resulting pollutant removals for each subcategory; and
- Section 11.15 presents the references used in this section.

11.1 Sources and Use of Available Data

EPA used data from several sources to estimate baseline and treated pollutant loadings. These sources included:

- EPA site visits;
- EPA sampling episodes at iron and steel sites;
- EPA requests for additional data after proposal;
- Industry responses to the U.S. EPA Collection of 1997 Iron and Steel Industry Data, also referred to as the detailed survey;
- Industry responses to the U.S. EPA Collection of 1997 Iron and Steel Industry Data (Short Form), also referred to as the short survey;
- Industry responses to the U.S. EPA Analytical and Production Data Follow-Up to the Collection of 1997 Iron and Steel Industry Data, also referred to as the Analytical & Production Survey; and
- Publicly available National Pollutant Discharge Elimination System (NPDES) and pretreatment permit application data.

Section 3 discusses data sources used to develop this regulation in detail.

EPA used flow rate data from the industry surveys and pollutant concentration data from the sources listed above to calculate the pollutant loadings. EPA defined the types of pollutant concentration data as follows:

- Survey Summary Data - Industry self-monitoring data supplied by sites in the detailed and short surveys. These data are a 1997 annual average.

- Industry Self-Monitoring Data (ISMD) - Self-monitoring data (typically daily monitoring report data) submitted with the Analytical and Production Survey, detailed survey, or short survey, sent as a result of EPA's request subsequent to survey submittal, or submitted during a site visit.

- Sampling Data - Data collected during EPA's wastewater sampling program.

- Permit Application Data - Publicly available NPDES and pretreatment permit application data. These data were only used where necessary (i.e., if self-monitoring or sampling data did not sufficiently represent operating conditions or if no other data were available for the site).

Depending on the source and type of data, the Agency treated pollutant concentration data below the sample detection limit differently. For EPA sampling data, when concentrations were below the sample detection limit, EPA used the reported sample detection limit as the concentration for that pollutant. For ISMD, when concentrations were below the sample detection limit, the Agency used what the site reported as the sample detection limit. When sites provided survey summary data, EPA used the average concentrations that the sites submitted, which could have been calculated by several methods. Of those sites that submitted survey summary data, 26 percent used the method detection limit as the concentration for that pollutant; 26 percent used the sample detection limit; 7 percent used one-half the method detection limit; 3 percent used one-half the sample detection limit; and 38 percent used zero. Using zero as the concentration for the pollutant estimated the minimum amount of the pollutant, and using the method or sample detection limit estimated the maximum amount.

11.2 Methodology Used to Estimate Baseline Pollutant Loadings

Using industry survey responses, EPA determined which subcategories and segments apply to each site based on the manufacturing operations in place. EPA calculated the baseline pollutant loadings for a specific facility using the production-normalized process discharge flow rate for each manufacturing operation and the concentration of pollutants in its effluent obtained from the data sources described in Section 11.1. Section 11.2.1 through 11.2.6 provides additional detail regarding the calculations of baseline pollutant loadings.

However, EPA did not have data for every facility to calculate baseline pollutant loadings. In some cases, EPA did not have data for all pollutants of concern (POCs). In other cases, the data EPA had did not represent iron and steel industry wastewater only. In addition, some facilities commingle iron and steel wastewater with storm water or ground water prior to monitoring for compliance; pollutant concentration data from these facilities do not represent baseline pollutant concentrations from the iron and steel manufacturing process. In all of these cases, facility-supplied data were insufficient for use in estimating baseline loadings. As a surrogate for site-specific baseline pollutant concentrations, EPA averaged available baseline concentrations from facilities in a subcategory or segment and used this average to estimate pollutant concentrations where site-specific data were not available. Section 11.2.2 describes

EPA's methodology for calculating subcategory-specific average baseline pollutant concentrations in detail.

11.2.1 Determination of Site-Specific Average Baseline Pollutant Concentrations

To calculate baseline concentrations, if a site provided both ISMD and survey summary data for the same pollutant, then the Agency used the ISMD and excluded the survey summary data because the survey summary data were an average of pollutant concentration data for the entire year calculated using a variety of methods described in Section 11.1. If a site had sampling data in addition to ISMD for the same pollutant, then EPA first averaged the sampling data and ISMD for the pollutant separately, and then averaged the resulting data averages together.[1] If only sampling data were available, then EPA used the sampling data average. EPA used permit application data only when no other data were available.

When sites provided ISMD for 1997[2], the Agency calculated an arithmetic average of all the data for the loadings analysis. When sites provided survey summary data (where results were already averaged), the Agency used those data. For permit application data, sites monitored multiple times for some pollutants but only one time for other pollutants. EPA used the permit application data as reported.

11.2.2 Determination of Subcategory-Specific Average Baseline Pollutant Concentrations

After calculating site-specific baseline concentrations for each pollutant, EPA calculated a single set of average baseline pollutant concentrations for each subcategory or segment.[3] To calculate the subcategory-specific average baseline pollutant concentrations, EPA averaged applicable site-specific average baseline concentration data for all sites together in each subcategory or segment, except conventional pollutants. For conventional pollutants, the Agency calculated separate subcategory-specific average baseline pollutant concentrations for direct and indirect dischargers because the POTW treats conventional pollutants; therefore, the concentrations for conventional pollutants for indirect dischargers would be expected to be higher than for direct dischargers. If no data were available for conventional pollutants for either direct or indirect dischargers, then EPA used the same average baseline pollutant concentration

[1]When calculating average pollutant concentrations using both sampling data and ISMD, EPA did not eliminate any sampling data or industry self-monitoring data prior to averaging them, even if they were duplicate samples (from the same day and sampling point).

[2]EPA used data that were representative of the sites' treatment system in 1997. If a site provided data from a year other than 1997, EPA used the data only if it was representative of the treatment system in 1997 (e.g., if the site had any treatment system upgrades after 1997, the data from after 1997 were not used).

[3]For cokemaking, EPA calculated a separate set of subcategory-specific average baseline pollutant concentrations for sites with ammonia stills only and for sites with ammonia stills and biological treatment. For ironmaking and sintering, EPA calculated a separate set of subcategory-specific average baseline pollutant concentrations for sites with blast furnace wastewater only and sites with commingled blast furnace and sintering wastewater.

for both types of dischargers. The average baseline pollutant concentrations were used to calculate the baseline pollutant loadings when no data for a POC were available for a site. For example, if no cokemaking data were available for total cyanide for a site, EPA calculated the baseline pollutant loading for total cyanide for that site using the average baseline concentration for total cyanide, which in turn was calculated using all the applicable total cyanide data submitted by cokemaking facilities.

For some pollutant parameters, EPA performed a logic check to ensure that average concentrations of pollutants derived from different datasets or data transfers did not violate certain rules for bulk parameters. For example, many sites had industry self-monitoring data for oil and grease (measured as hexane extractable material), or O&G; however, they did not have industry self-monitoring data for total petroleum hydrocarbons (measured as silica gel treated-hexane extractable material), or TPH. Before using the subcategory-specific average baseline concentration for TPH to fill the gap in the data, EPA compared it to the site's data for O&G. In some cases, the subcategory-specific average baseline concentration for TPH was greater than the site's concentration for O&G, which would be illogical because TPH is a subset of O&G. In these cases, EPA used the site's concentration for O&G as the concentration for TPH. The data logic checks for each site were the following rules:

- Phenol could not have a concentration higher than total phenols;
- Amenable cyanide or weak acid dissociable (WAD) cyanide could not have a concentration higher than total cyanide;
- TPH could not have a concentration higher than O&G; and
- Hexavalent chromium could not have a concentration higher than total chromium.

If one of the above rules was violated, EPA adjusted one concentration, always deferring to the site's data. EPA encountered the following data conflicts and resolved them as shown below.

Conflict	EPA Action
The site-specific concentration for a bulk parameter is less than the transferred average baseline concentration for a pollutant within the bulk parameter.	Use the site-specific concentration as the baseline concentration for both the bulk parameter and the pollutant within the bulk parameter.
The site-specific concentration for a pollutant within a bulk parameter is greater than the transferred average baseline concentration for a bulk parameter.	Use the site-specific concentration as the baseline concentration for both the pollutant within the bulk parameter and the bulk parameter.

Conflict	EPA Action
From the EPA sampling data, the site concentration for total recoverable phenols is less than the site concentration for phenol (no industry self-monitoring data are available for either pollutant).	The method for phenol is a gas chromatograph/mass spectrometry (GC/MS) method. The method for total recoverable phenols is a colorimetric method (Reference 10-1). The GC/MS method is expected to be more accurate than the colorimetric method; therefore, use the concentration of phenol for both parameters.

11.2.3 Cotreatment of Wastewater

Some sites cotreat their wastewater from multiple subcategories, as discussed in Section 10. Cotreatment is any site treatment system that receives wastewater from more than one subcategory. For sites that cotreat their wastewater, EPA used the following methodology to determine which baseline concentration data are appropriate for each subcategory:

- EPA determined if cotreatment outfall data and/or subcategory-specific internal monitoring data are available. Cotreatment outfall data are pollutant data from a sampling point after the cotreatment system. Subcategory-specific internal monitoring data are pollutant data from a sampling point after an in-process treatment system that treats the subcategory-specific wastewater only, and before end-of-pipe cotreatment.

- If no cotreatment or subcategory-specific data were available for a facility, then EPA used the subcategory-specific average baseline pollutant concentrations for the facility.

- If dilution water entering the cotreatment system and subcategory-specific treatment system was greater than 10 percent, then EPA did not use the site data because they do not represent treated effluent for that subcategory. EPA used the subcategory-specific average baseline pollutant concentrations for that site.

- If wastewater sources from other subcategories exceeded 10 percent of the influent for a facility in a particular subcategory, then EPA did not use the cotreatment outfall data. EPA similarly used the subcategory-specific average baseline pollutant concentrations for that site.

If the cotreatment outfall data were not available or not used for the above reasons, then EPA used the subcategory-specific internal monitoring data. The Agency used these data, regardless of the additional treatment at the cotreatment system, to determine if any costs for treatment upgrades to the subcategory-specific wastewater treatment system were needed to meet the limitations. As an example, one site has both cotreatment and internal monitoring data, and the cotreatment system is expected to remove considerable amounts of POCs. The site's cotreatment data are not used because 34% of the wastewater is dilution water. This site is estimated to incur costs to upgrade its subcategory-specific wastewater treatment system, not its

cotreatment system for the reasons described in Section 10. Therefore, the internal monitoring data are used because the limitations would apply only to the effluent from the subcategory-specific wastewater treatment system.

11.2.4 POCs Included in the Pollutant Loadings Analysis

EPA estimated pollutant loadings for only a subset of the POCs identified in Section 7. From the list of POCs in Section 7, EPA eliminated pollutants that were never detected in the baseline effluent for any site, by subcategory and segment. EPA used data from its sampling program and industry self-monitoring data to determine which POCs were never detected in the effluent; however, for many POCs (particularly organic compounds), the only available data were from EPA's sampling program. EPA excluded undetected POCs because the pollutant removals calculated would be zero (i.e., EPA did not calculate or assume any pollutant removals less than the detection limit). Table 11-1 lists the POCs that were not detected in the effluent at any site for each subcategory and segment. In addition, EPA eliminated POCs from the pollutant loadings analysis that did not pass certain influent editing criteria discussed in Section 14. Table 11-2 lists these pollutants.

For the cokemaking and integrated steelmaking subcategories, EPA also considered in its pollutant loadings and removals analyses the percent removals for POCs by the model BAT/PSES treatment sites. (Section 14 discusses selection of model BAT/PSES treatment facilities.) These percent removals show the extent to which POCs were being removed by the treatment technology. For some POCs, the BAT/PSES treatment facilities showed no removals (i.e., the percent removal was zero or negative). Furthermore, if a particular POC showed no removal at all the BAT/PSES treatment facilities, then EPA concluded that the model treatment technology does not remove the POC. Therefore, for these POCs, EPA set the treated pollutant loadings equal to the baseline pollutant loadings to reflect the fact that the pollutant removals would be zero. See the memorandum titled "Percent Removal Estimates and Their Effect on LTA and Pollutant Removal Calculations", document number IS10849 in Section 14.7 of the rulemaking record for additional detail regarding use of this criteria in the loadings analyses. Section 12 and 14 provide more information on how the percent removals were calculated.

For the remaining subcategories, EPA did not consider percent removals as a component of the loadings analyses. See document number IS10849 in Section 14.7 of the rulemaking record for an assessment of the impact that the percent removals would have had on the estimated pollutant removals for the final rule. The impacts are not significant and they would not have changed any of EPA's decisions for the final rule.

11.2.5 Sites and Data Used in the Pollutant Loadings Analysis

EPA estimated both baseline and treated pollutant loadings for the iron and steel industry for the base year 1997. The Agency included sites (or operations) that operated during the 1997 calendar year in the cost and loadings analyses, if the site operated at least one day during the 1997 calendar year. Even if a site (or operation) shut down after 1997, it was retained

in the costing and pollutant loadings analyses, except for one site. This site shut down operations after 1997 and EPA was unable to verify costing assumptions and the site's reported high flow; therefore, this site was removed from the costing and loadings analyses, but its data were used to calculate subcategory-specific average baseline pollutant concentrations for some subcategories. Also, if a site (or operation) commenced after 1997, EPA did not include the site (or operation) in the costing or pollutant loadings analyses. See Section 3.1 for additional information regarding EPA's use of 1997 as the base year for its analyses for this rule. Furthermore, if a site did not discharge wastewater to surface water or a POTW in 1997 (e.g., recycles all of its wastewater), then EPA excluded the site from the pollutant loadings analysis. See Table 5-3 in Section 5 for additional information regarding the number of zero or alternative discharging sites.

For some sites, 1997 data did not represent normal operating conditions; therefore, data for alternate years were used according to what the sites specified as their representative time period. For example, EPA was aware of several sites that had operated during only part of 1997 because of strikes, shut-downs, or start-ups. For these sites, EPA used production, analytical, and flow rate data from years that the sites indicated were representative of normal operations. However, if sites installed or significantly altered wastewater treatment systems either during or after 1997, EPA used the data that represented their 1997 wastewater treatment configuration. Also, at least one site changed its discharging status after 1997; EPA used the site's discharge status in the base year 1997 in its analyses for the reasons discussed in Section 3.1.

EPA was aware of a unique case in which a site's industry self-monitoring data from 1997 conflicted with industry self-monitoring data from 1996 by an order of magnitude. EPA contacted the site and, at their suggestion, used three years of analytical data to better represent the treatment system performance.

11.2.6 Baseline Pollutant Loadings Calculation

As noted above, baseline pollutant loadings represent the current loadings for each site before implementation of the model technology. In the industry survey, most sites reported flow rates and some sites reported baseline concentration data. Sites reported flow from operations in either gallons per minute or gallons per day, along with the corresponding days per year and hours per day, as necessary. EPA used the flows and productions as reported by the sites to calculate the PNF. For pollutant concentrations, EPA used the analytical data submitted by each site. If no data were submitted for a site or a pollutant, the subcategory-specific average baseline pollutant concentrations for the subcategory or segment were used. For each pollutant, EPA estimated the baseline pollutant loadings for each site's operations in a subcategory, using Equation 11-1:

$$\text{BL Load} = \text{BL PNF} \times \text{PROD} \times \text{BL Conc} \times \text{Unit Conversion Factor} \qquad (11\text{-}1)$$

where:

BL Load	=	Site or operation baseline pollutant loadings discharged to surface water or POTW by a site, lbs/yr;
BL PNF	=	Site or operation process wastewater baseline PNF, gal/ton;
PROD	=	Site or operation average production during 1997, assuming 365 days per year[4], tons/yr;
BL Conc	=	Site or operation baseline concentration, or average baseline concentration if no data provided for that pollutant, mg/L; and
Unit Conversion Factor	=	$8.345(10^{-6})$ lbs/gal/(mg/L).

For each site, EPA determined which manufacturing operations in each subcategory and segment generate wastewater and calculated pollutant loadings for each operation. For example, for integrated steelmaking, one site could have one basic oxygen furnace (BOF) and two continuous casting operations. For this example, EPA would determine the PNF and site-specific average baseline pollutant concentrations for the BOF. EPA would then perform a separate but similar determination and calculation for the casting operations. These baseline loadings would then be summed to calculate the baseline pollutant loadings for the subcategory for the site. Some subcategories do not have more than one operation; therefore, EPA did not have to sum the pollutant loadings and removals to calculate the baseline, treated, and removal loadings for each site.

For indirect dischargers, EPA also accounted for treatment at the POTW prior to discharge to surface waters using the following equation:

$$\text{BL Load}_{\text{POTW}} = (1 - \text{POTW \% Removal}) \times (\text{BL Load}) \qquad (11\text{-}2)$$

where:

$\text{BL Load}_{\text{POTW}}$	=	Site or operation baseline pollutant loadings discharged to surface water after treatment at the POTW, lbs/yr;
BL Load	=	Site or operation baseline pollutant loadings discharged to the POTW from Equation 11-1 for each indirect discharger, lbs/yr; and
POTW % Removal	=	Percent removal, shown in Table 11-3.

[4]EPA converted sites' annual reported productions to daily productions normalized to a 365 day production year to allow comparisons between facilities.

Most of the POTW percent removal values are based on data from the Fate of Priority Pollutants in Publicly Owned Treatment Works and National Risk Management Research Laboratory (NRMRL) Treatability Database and are discussed in Section 12 (References 11-1 and 11-2). The baseline and treated pollutant loadings and associated removals for indirect dischargers presented in this section represent discharge from POTWs to receiving streams using the above equation.

For each subcategory and segment, EPA multiplied the pollutant loadings for each site or operation by the survey weight and estimated the total industry baseline loadings for each subcategory and segment using the following equation:

$$\text{Weighted BL Load} = \sum (\text{BL Load} \times \text{SW}) \qquad (11\text{-}3)$$

where:

Weighted BL Load	=	Industry baseline pollutant loadings for a subcategory, lbs/yr;
BL Load	=	Site or operation baseline pollutant loadings from Equation 11-1 for direct dischargers and from Equation 11-2 for indirect dischargers, lbs/yr; and
SW	=	Survey weight, listed in Table A-4 of Appendix A of this document.

11.3 Methodology Used to Estimate Treated Pollutant Loadings

Treated pollutant loadings are estimates of pollutant loadings for each site that would result after implementation of the model technology options. EPA estimated treated pollutant loadings representing each option using model PNFs and long-term average effluent concentrations (LTAs). Section 13 describes the determination of the model PNFs and Section 14 describes the calculation of the model LTAs. For all subcategories (except the cokemaking subcategory), EPA did not calculate model LTAs for all POCs. To calculate the treated pollutant loadings, EPA calculated the arithmetic mean of BAT performance data for use as a surrogate for the model LTA when no model LTA was calculated for a POC.

11.3.1 Treated Pollutant Loadings Calculation

EPA estimated treated pollutant loadings for each site in the subcategory using the following equation:

$$\text{Treated Load} = \text{PNF} \times \text{PROD} \times \text{LTA} \times \text{Unit Conversion Factor} \qquad (11\text{-}4)$$

where:

Treated Load	=	Site or operation treated pollutant loadings as a result of implementing a particular technology option, lbs/yr;
PNF	=	Model PNF, gal/ton;
PROD	=	Site or operation average production during 1997, assuming 365 days per year[5], tons/yr;
LTA	=	Model LTA for each option, mg/L; and
Unit Conversion Factor	=	$8.345(10^{-6})$ lbs/gal/(mg/L).

If a site's or operation's baseline concentration for a particular pollutant was less than the model LTA for a particular option, then EPA did not estimate any removal associated with further concentration reduction for that pollutant (i.e., EPA set the LTA equal to the site's baseline concentration). If a site's or operation's PNF was lower than the model PNF, then EPA did not estimate any removal associated with further flow reduction (i.e., EPA set the PNF equal to the baseline PNF). Finally, in some cases, EPA used the site's baseline PNF or baseline pollutant concentrations to calculate the treated pollutant loadings, even though they exceed the model PNF or model LTAs, because the site did not exceed the model loading. These cases are dependent upon EPA's costing analysis as described in Section 11.5.

EPA adjusted the site's or operation's treated pollutant loading by the POTW percent removal for indirect dischargers, according to Equation 11-2. Using this equation, EPA calculated the treated pollutant loadings discharged to the surface water, after the wastewater is treated by the POTW.

After determining a site's or operation's treated pollutant loadings, EPA multiplied the site's or operation's treated pollutant loadings by the survey weight and estimated the treated pollutant loadings for each subcategory and segment using Equation 11-3.

11.4 Pollutant Removals Calculation

EPA estimated pollutant removals for each subcategory using the baseline pollutant loadings and treated pollutant loadings, as shown in the following equation:

$$\text{Removal Load} = \text{BL Load} - \text{Treated Load} \qquad (11\text{-}5)$$

[5]EPA converted sites' annual reported productions to daily productions normalized to a 365 day production year to allow comparisons between facilities.

where:

Removal Load	=	Site or operation pollutant loadings removed for a site or operation as a result of implementing a particular technology option, for each pollutant, lbs/yr;
BL Load	=	Site or operation baseline pollutant loadings calculated by Equation 11-1, lbs/yr; and
Treated Load	=	Site or operation treated pollutant loadings as a result of implementing a particular technology option as calculated by Equation 11-4, lbs/yr.

Since the pollutant removals calculated using Equation 11-5 represent the removals for each site or operation before treatment at the POTW, EPA summed the removals for each site and adjusted the site's removal loading by the POTW percent removal for indirect dischargers, according to Equation 11-2. Using this equation, EPA calculated the amount of pollutants removed from the surface water by implementing each technology option.

After determining a site's removal loading, EPA multiplied the site removal loading by the survey weight and estimated the removal loading for each subcategory and segment, using Equation 11-3.

11.5 How the Costing Analysis Coordinates with the Method Used to Calculate Treated Pollutant Loadings and Pollutant Removals

Section 10 describes how EPA evaluated whether a site currently performs as well as or better than the model technology for an option, using the model LTAs and model PNF to calculate the model loading. To do this EPA calculated the baseline pollutant loading for each site for the regulated pollutants and compared it to the model loading to determine if the site currently meets the limitations. Then, EPA allocated costs to the site if the site did not meet the model loading for a regulated pollutant. Section 10 discusses the costing analysis in more detail. The costing analysis affects the loadings analysis because EPA based the calculation of treated loadings on the costing decisions presented in Section 10. If a site performed as well as or better than the model technology for pollutants considered for regulation, treated pollutant loadings remained unchanged from baseline pollutant loadings and the resultant pollutant removals were zero for that site. Similarly, costs were zero for that site. If the site did not perform as well as the model technology, EPA estimated treated loadings and pollutant removals for the site, based on the reduced PNF and/or upgrade to treatment in place. Specifically, to achieve treated effluent quality, EPA allocated costs to sites for the following scenarios: 1) install or improve wastewater treatment to reduce effluent pollutant concentrations, 2) reduce wastewater flow rates through recycling or in-process controls, or 3) improve wastewater treatment and reduce flow rates. These decisions directly affected how EPA estimated the treated pollutant loadings for each site and technology option. In scenario 1, EPA estimated costs for sites to improve wastewater treatment and set treated pollutant concentrations equal to the model LTAs. In scenario 2, EPA estimated costs for sites to reduce wastewater flow rates to achieve the model PNF and set the

treated PNF equal to the model PNF. In scenario 3, both the treated pollutant concentrations and treated PNF were set equal to the model LTAs and PNF, respectively.

11.6 Example Calculation

The following example calculation shows the steps EPA used to calculate the baseline pollutant loadings, treated pollutant loadings, and pollutant removals.

11.6.1 Baseline Pollutant Loadings Calculation

Step 1. Identify available site-specific average baseline pollutant concentration data.

The first step is identifying the available data that are representative of the subcategory. For this example, EPA identified data for two hypothetical sites that comprise the integrated steelmaking subcategory. Site A is a direct discharger and Site B is an indirect discharger.

Available Site-Specific Average Baseline Pollutant Concentration Data

Site	Operation	Discharge Status	Baseline Zinc Concentration (mg/L)	Baseline Lead Concentration (mg/L)
Site A	Continuous Casting (CC)	Direct	0.13	Not available
Site A	Wet-Suppressed Basic Oxygen Furnace (BOF-WS)	Direct	Not available	0.15
Site B	Vacuum Degassing (VD)	Indirect	0.67	0.5
Site B	Continuous Casting (CC)	Indirect	0.12	0.01

Step 2. Calculate subcategory-specific average baseline pollutant concentrations to fill data gaps.

EPA calculated subcategory-specific average baseline pollutant concentrations for integrated steelmaking using available data as described in Section 11.2.2. The subcategory-specific average baseline pollutant concentrations were used to fill in data gaps for each site (i.e., used in place of "not available" in above table). The subcategory-specific average baseline pollutant concentrations were calculated below, using the data from the table in Step 1.

Subcategory-Specific Average Baseline Pollutant Concentration Data

Discharge	Average Zinc Concentration (mg/L)	Average Lead Concentration (mg/L)
Direct, Indirect (a)	0.31	0.22

(a) Average calculated using data from direct and indirect dischargers for all pollutants, except conventional parameters, which were calculated separately for direct and indirect dischargers.

Step 3. Calculate the baseline loadings for each operation and site.

EPA calculated the baseline pollutant loadings for each operation and POC using Equation 11-1 and the site-specific and subcategory-specific average baseline pollutant concentrations, the baseline PNF, and production for each operation presented in the table below.

Production, Baseline PNFs, Site-Specific Average Baseline Pollutant Concentrations, and Baseline Loadings for Each Site

Site	Operation	Production (tons/yr) (a)	Baseline PNF (gal/ton)	Baseline Zinc Concen-tration (mg/L)	Baseline Lead Concen-tration (mg/L)	Baseline Zinc Loading (lbs/yr)	Baseline Lead Loading (lbs/yr)
Site A	CC	2,190,000	1,800	0.13	0.22 (b)	4,276	7,237
Site A	BOF - WS	2,555,000	17	0.31 (b)	0.15	112	54.4
Site B	VD	1,095,000	64	0.67	0.5	392	292
Site B	CC	912,500	20	0.12	0.01	18.3	1.52

(a) Production in tons/yr = Production in tons/day multiplied by 365 days.
(b) Subcategory-specific average baseline pollutant concentration used.

Then, EPA summed the baseline loadings for each operation for each site.

Baseline Pollutant Loadings for Each Site

Site	Baseline Zinc Loading (lbs/yr)	Baseline Lead Loading (lbs/yr)
Site A	4,388	7,291
Site B (a)	410	294

(a) The baseline pollutant loadings presented for this site represent the pollutant loadings discharged to the POTW.

11.6.2 Treated Pollutant Loadings Calculation

Step 1. Review costing analysis for each site.

EPA used the following analysis for the hypothetical Sites A and B from Section 11.6.1 for both its pollutant removal and costing estimates:

- Site A: This site has two separate treatment systems that treat continuous casting (CC) and basic oxygen furnace - wet-suppressed (BOF-WS) wastewater. EPA identified and estimated costs for upgrades to both treatment systems that it believed were necessary to achieve the model pollutant loadings (i.e., model LTAs multiplied by the model PNF) for lead and zinc. For the CC treatment system, these upgrades included treatment to reduce the concentration of lead and zinc and flow reduction because the site exceeded both the model LTAs and model PNF. EPA estimated costs for these upgrades to achieve the model pollutant loading. See Section 10. For the BOF-WS treatment system, the upgrades included treatment to reduce the concentration of lead and zinc because the site exceeded the model LTAs, but flow reduction was not necessary because the baseline PNF was less than the model PNF; therefore, the site achieves the model pollutant loading when it reduces the lead and zinc concentrations to the model LTA. EPA estimated costs for these upgrades to achieve the model pollutant loading.

- Site B: This site has two separate treatment systems for the vacuum degassing (VD) and CC wastewater. EPA identified the upgrades to the VD treatment system that it believed were necessary to achieve the lead and zinc model loading. These upgrades included treatment to remove lead and zinc and flow reduction because the site exceeded both the model LTAs and model PNF. EPA estimated costs for these upgrades. See Section 10. EPA did not estimate any compliance costs for the CC system because the CC treated effluent achieves the model pollutant loadings.

Step 2. Calculate the treated pollutant loadings for each operation and site.

Using the analysis described above, model LTAs, and model PNF presented in the table below, EPA calculated the treated pollutant loadings for each operation using Equation 11-4.

Production, Model LTAs, Model PNFs, and Treated Pollutant Loadings for Each Operation

Site	Operation	Model Zinc LTA (mg/L)	Model Lead LTA (mg/L)	Model PNF (gal/ton)	Production (tons/yr) (a)	Treated Zinc Loading (lbs/yr)	Treated Lead Loading (lbs/yr)
Site A	CC	0.121	0.0141	25	2,190,000	55.3	6.44
Site A	BOF - WS	0.121	0.0141	17 (b)	2,555,000	43.9	5.11
Site B	VD	0.121	0.0141	13	1,095,000	14.4	1.67
Site B	CC	0.12 (b)	0.01 (b)	20 (b)	912,500	18.3	1.52

(a) Production in tons/yr = Production in tons/day multiplied by 365 days.
(b) These site-specific average baseline pollutant concentrations and PNFs were less than the model LTAs and model PNF; therefore, EPA used the sites' data to calculate the treated pollutant loadings.

EPA summed the treated pollutant loadings for each operation to calculate the treated pollutant loadings for each site.

Treated Pollutant Loadings for Each Site

Site	Treated Zinc Loading (lbs/yr)	Treated Lead Loading (lbs/yr)
Site A	99.2	11.6
Site B (a)	32.7	3.19

(a) The treated pollutant loadings presented for this site represent the pollutant loadings discharged to the POTW.

11.6.3 Pollutant Removals Calculation

Step 1. Subtract the treated pollutant loadings from the baseline pollutant loadings to calculate the pollutant removals.

Using Equation 11-5 and the baseline and treated pollutant loadings calculated in Sections 11.6.1 and 11.6.2, respectively, EPA calculated the pollutant removals for each operation for each hypothetical site.

Baseline and Treated Pollutant Loadings and Pollutant Removals for Each Operation

Site	Operation	Baseline Zinc Loadings (lbs/yr)	Treated Zinc Loadings (lbs/yr)	Zinc Removals (lbs/yr)	Baseline Lead Loadings (lbs/yr)	Treated Lead Loadings (lbs/yr)	Lead Removals (lbs/yr)
Site A	CC	4,276	55.3	4,221	7,237	6.44	7,231
Site A	BOF - WS	112	43.9	68.1	54.4	5.11	49.3
Site B (a)	VD	392	14.4	378	292	1.67	290
Site B (a)	CC	18.3	18.3	0	1.52	1.52	0

(a) The pollutant removals presented for this site represent the pollutant removals before treatment of the POTW.

Step 2. Calculate the pollutant removals for each site.

EPA summed the pollutant removals for each operation to calculate the pollutant removals for each site.

Pollutant Removals for Each Site

Site	Zinc Removal (lbs/yr)	Lead Removal (lbs/yr)
Site A	4,289	7,279
Site B (a)	378	290

(a) The pollutant removals presented for this site represent the pollutant removals before treatment at the POTW.

Step 3. Calculate the baseline pollutant loadings, treated pollutant loadings, and pollutant removals for the integrated steelmaking subcategory.

To calculate the pollutant loadings and removals for the integrated steelmaking subcategory, EPA multiplied the pollutant loadings and removals for each site by the survey weight using Equation 11-3. For indirect dischargers only, EPA applied Equation 11-2 to calculate the pollutant loadings and removals after treatment at the POTW for each site. Finally, EPA summed the pollutant loadings and removals for each site for the integrated steelmaking subcategory.

Weighted Baseline and Treated Pollutant Loadings and Removals for the Integrated Steelmaking Subcategory

Site	Survey Weight	Pollutant	POTW % Removal	Weighted (a) Baseline Loading (lbs/yr)	Weighted (a) Treated Loading (lbs/yr)	Weighted (a) Removal (lbs/yr)
Site A	1.03448	Zinc	NA	4,539	103	4,436
Site A	1.03448	Lead	NA	7,543	12.0	7,531
Site B	1	Zinc	79%	86.2	6.9	79.3
Site B	1	Lead	77%	67.6	0.734	66.8

NA - Not applicable because this site is a direct discharger.
(a) Weighted indicates that the survey weights have been applied. For indirect dischargers, the loadings presented represent what is discharged to surface water as calculated using Equation 11-2. The toxic weighting factor was not applied.

Therefore, for the integrated steelmaking subcategory, the amount of lead and zinc removed by the model technology for direct dischargers is 7,530 lbs/yr and 4,437 lbs/yr, respectively. For indirect dischargers, the amount of lead and zinc removed by the model technology is 66.7 lbs/yr and 79.4 lbs/yr, respectively. Note that to simplify this example, only two sites were included. Generally, there are many sites in a subcategory and the removals for sites with the same discharge status (e.g., direct and indirect) would be summed for each pollutant to calculate the pollutant reduction for the option.

After calculating the pollutant removals for each subcategory, EPA used these removals to evaluate the effectiveness, environmental benefits, and cost effectiveness of each regulatory option.

11.7 Pollutant Loadings and Removals for the Cokemaking Subcategory

EPA estimated pollutant loadings for 20 by-product recovery cokemaking sites: 12 direct dischargers and 8 indirect dischargers. One site shut down operations after 1997 and EPA was unable to verify costing assumptions and the site's reported high flow; therefore, this site was removed from the costing and loadings analyses. Non-recovery cokemaking sites are zero dischargers; therefore, EPA did not calculate pollutant loadings or removals for these sites.

EPA estimated pollutant loadings for 35 of the 72 POCs. Thirty of the POCs were not included in the loadings analysis because they were not detected in by-product recovery cokemaking effluent (listed in Table 11-1). Four of the remaining POCs were excluded because they failed the influent editing criteria (listed in Table 11-2). See Section 14 for more information regarding the influent editing criteria. Biochemical oxygen demand 5-day was excluded because it was a duplicate of another parameter (biochemical oxygen demand 5-day - carbonaceous). Amenable cyanide and fluoride were inadvertently left out of the loadings analysis. See the "Pollutant Loadings and Removals Inaccuracies" memorandum, document

number IS10831 in Section 14.7 of rulemaking record for more information regarding these inaccuracies in the loadings model. In summary, no pollutant loadings or removals were calculated for a total of 37 POCs.

EPA calculated percent removals for the cokemaking subcategory using the influent and effluent data for the model BAT treatment facilities. For the BAT-1 option, nitrate/nitrite and total suspended solids (TSS) had negative percent removals for all the model facilities; therefore, no removals were calculated for these POCs. For the PSES-1 option, phenol and TSS had negative percent removals for all model facilities; therefore, no removals were calculated for these POCs. See Sections 12 and 14 for more information regarding the percent removals.

11.7.1 Methodology Used to Estimate Baseline Pollutant Loadings

EPA estimated baseline pollutant loadings for each by-product recovery cokemaking facility using available site-specific and subcategory-specific average baseline pollutant concentrations, the baseline PNFs, and the manufacturing operation production obtained from the industry surveys.

Determination of Site-Specific Average Baseline Pollutant Concentrations

EPA calculated site-specific average baseline pollutant concentrations to determine baseline pollutant loadings for each by-product recovery cokemaking site. EPA used applicable effluent concentration data from all 20 sites: 12 direct dischargers and 8 indirect dischargers. Fourteen sites provided industry self-monitoring data, nine sites provided survey summary data, and EPA collected data for three sites. EPA had data from multiple sources from five sites (e.g., two sites provided survey summary and industry self-monitoring data, two sites provided industry self-monitoring and EPA sampling data, and one site provided survey summary and EPA sampling data) that represented by-product recovery cokemaking wastewater. To calculate the site-specific average baseline pollutant concentrations for the two sites that submitted survey summary and industry self-monitoring data, EPA used the industry self-monitoring data. When no industry self-monitoring data were available for a POC, EPA used survey summary data for that POC. To calculate the site-specific average baseline pollutant concentrations for the remaining sites, EPA averaged the site's multiple data sets together. All 20 sites in the pollutant loadings analysis had baseline concentration data for ammonia as nitrogen. Seventeen of the sites also monitored for total cyanide and total recoverable phenolics. Several sites monitored for benzo(a)pyrene, benzene, and naphthalene, and TSS. For many pollutants, particularly many of the priority organic constituents, the only available data were from EPA sampling episodes.

Determination of Subcategory-Specific Average Baseline Pollutant Concentrations

EPA used the subcategory-specific average baseline pollutant concentrations as a surrogate for site-specific average baseline pollutant concentrations when no data for a POC were

available for a site. To calculate subcategory-specific average baseline concentrations for by-product recovery cokemaking, EPA examined technology in place: 11 of the 12 direct dischargers had ammonia stills and biological treatment in place, and 1 site had an ammonia still followed by physical/chemical treatment (dephenolizer, sand filter, and clarifier). All of the eight indirect dischargers had ammonia stills, but three also had biological treatment. EPA calculated the subcategory-specific average baseline pollutant concentration for two types of sites: those with ammonia stills and biological treatment in place and those with ammonia stills only.

To calculate the subcategory-specific average baseline concentrations for sites with ammonia still treatment only, EPA used five data sets from the five indirect dischargers with ammonia stills only (no direct dischargers operate ammonia stills only). For 23 of the 35 POCs included in the analysis, no data were available from these sites; therefore, EPA used the ammonia still effluent sampling data from four by-product recovery cokemaking sites with ammonia stills and biological treatment to calculate subcategory-specific average baseline concentrations for these remaining POCs because these data are representative of sites without biological treatment (i.e., ammonia stills only). For POCs where data were available for both the five sites with only ammonia stills and the four sites with ammonia stills and biological treatment, all the data were averaged together. Table 11-4 presents the subcategory-specific average baseline pollutant concentrations for sites with ammonia stills only.

For sites with both ammonia stills and biological treatment, EPA calculated subcategory-specific average baseline concentrations by averaging 22 data sets for 16 sites, including industry self-monitoring data for some pollutants and biological treatment effluent sampling data from three by-product recovery cokemaking treatment systems for all pollutants. EPA included data from a site that shut down its operations after 1997 to calculate the average baseline concentrations because the data are representative of sites with both ammonia stills and biological treatment. EPA calculated a separate subcategory-specific average baseline pollutant concentration for TSS for direct and indirect dischargers. For the indirect dischargers, data were not available for BOD 5-day (carbonaceous) and O&G; therefore, EPA used the subcategory-specific average baseline pollutant concentrations for the direct dischargers for these conventional POCs. Table 11-4 presents the subcategory-specific average baseline pollutant concentrations for sites with both ammonia stills and biological treatment. EPA used the averages presented in this table to calculate the pollutant loadings for the BAT-1 and PSES-1 options only. See the "Pollutant Loadings and Removals for the Cokemaking Subcategory" memorandum, document number IS10836 in Section 14.7 of the rulemaking record, for the subcategory-specific average baseline pollutant concentrations used for the BAT-3 and PSES-3 options. See the "Pollutant Loadings and Removals Inaccuracies" memorandum, document number IS10831 in Section 14.7 of the rulemaking record, for more information regarding the subcategory-specific average baseline pollutant concentrations used for the BAT-3 and PSES-3 options.

The direct discharger with physical/chemical treatment in place provided survey summary data for ammonia as nitrogen, benzene, benzo(a)pyrene, naphthalene, total cyanide, total recoverable phenols, and TSS. Summary data were not available for the remaining POCs. In the 1982 iron and steel technical development document, EPA presented data for a site that

had physical/chemical treatment similar to the treatment used by this direct discharger. Data from the 1982 technical development document were preferentially used to represent the site-specific average baseline concentrations for 11 of the remaining POCs. For the remaining POCs, EPA used the subcategory-specific average baseline concentrations from sites with ammonia stills and biological treatment in place because the concentrations of these pollutants were similar to or less than other pollutant concentrations discharged by the site with physical/chemical treatment. The site-specific average baseline pollutant concentrations used for this site are not disclosed to prevent compromising confidential business information.

Cotreatment

Two of the by-product recovery cokemaking sites discharge their wastewater to cotreatment systems. Although both of these sites provided cotreatment outfall data, EPA did not use these data because cokemaking wastewater comprised less than 90 percent of the influent to cotreatment. Both of these sites also provided cokemaking effluent data (i.e., data from an internal monitoring point following dedicated in-process cokemaking wastewater treatment before entering cotreatment). EPA used these data for both sites because EPA costed for upgrades to the dedicated cokemaking wastewater treatment systems at these sites to achieve the model effluent pollutant loadings.

Baseline Pollutant Loadings Calculation

Using the site-specific and subcategory-specific average baseline concentrations, baseline PNFs and production, EPA calculated baseline pollutant loadings for the by-product recovery cokemaking segment using Equations 11-1 and 11-3. For indirect dischargers, EPA further adjusted the pollutant loadings using Equation 11-2 to account for additional removals at the POTW. Tables 11-5 and 11-6 present the baseline pollutant loadings for direct and indirect dischargers, respectively, in the cokemaking subcategory.

11.7.2 Methodology Used to Estimate Treated Pollutant Loadings and Pollutant Removals

EPA estimated treated pollutant loadings for the by-product recovery cokemaking segment using the model PNFs and LTAs as shown in Equation 11-4. Table 13-1 presents the model PNFs for the by-product recovery cokemaking segment. See the "Pollutant Loadings and Removals for the Cokemaking Subcategory" memorandum, DCN IS10836 in Section 14.7 of the rulemaking record, for more information regarding the LTAs. For indirect dischargers, EPA adjusted the treated pollutant loadings using Equation 11-2 to account for additional removals at the POTW. Tables 11-5 and 11-6 present the treated pollutant loadings for direct and indirect dischargers, respectively, in the cokemaking subcategory.

EPA calculated pollutant removals for the by-product recovery cokemaking segment as the difference between the treated and baseline pollutant loadings using Equation 11-5. The pollutant removals for BAT-1 were 346,000 lbs/yr for conventional pollutants, approximately 718,000 lbs/yr for nonconventional pollutants, and 30,200 lbs/yr for priority

pollutants. The pollutant removals for BAT-3 were 1,070,000 lbs/yr for conventional pollutants, approximately 1,080,000 lbs/yr for nonconventional pollutants, and 56,900 lbs/yr for priority pollutants. For PSES-1, the pollutant removals were 260,000 lbs/yr for nonconventional pollutants and 4,390 lbs/yr for priority pollutants. For PSES-3, the pollutant removals were approximately 562,000 lbs/yr for nonconventional pollutants and 24,400 lbs/yr for priority pollutants. Tables 11-5 and 11-6 present the pollutant removals for direct and indirect dischargers, respectively, in the cokemaking subcategory.

The flow reduction for direct dischargers was 41.2 million gallons per year, a two-percent reduction. For indirect dischargers, the flow reduction was 50.2 million gallons per year, a nine-percent reduction.

For more information regarding the calculation of pollutant loadings and removals for the cokemaking subcategory, see the Pollutant Loadings and Removals for the Cokemaking Subcategory memorandum in Section 14.7 of the Iron and Steel Rulemaking Record, DCN IS10836.

11.8 Pollutant Loadings and Removals for the Ironmaking Subcategory

EPA estimated pollutant loadings for the 15 ironmaking sites that generate and discharge process wastewater: 14 direct dischargers and 1 indirect discharger. Ten of the sites discharged only blast furnace wastewater, four sites discharged commingled blast furnace and sintering wastewater, and one site discharged only sintering wastewater.

For wastewater streams from blast furnace operations, EPA estimated pollutant loadings for 25 of the 27 POCs. For sites with commingled blast furnace and sintering wastewater, EPA combined the POCs for the blast furnace and sintering segments for a total of 67 POCs. EPA estimated pollutant loadings for 45 of these 67 POCs. For wastewater streams from only sintering operations, EPA estimated pollutant loadings for 43 of the 65 POCs. The remaining POCs (listed in Table 11-1) were excluded from the pollutant loadings analysis because they were never detected in ironmaking effluent.

11.8.1 Methodology Used to Estimate Baseline Pollutant Loadings

EPA estimated baseline pollutant loadings for each ironmaking facility using available site-specific and subcategory-specific average baseline pollutant concentrations, the baseline PNFs, and the manufacturing operation production obtained from the industry surveys.

Determination of Site-Specific Average Baseline Pollutant Concentrations

EPA calculated site-specific average baseline pollutant concentrations to determine baseline pollutant loadings for each operation in the ironmaking subcategory. EPA used applicable effluent concentration data from eleven direct dischargers and one indirect discharger to calculate the site-specific average baseline pollutant concentrations. Eight sites provided ISMD, two sites provided survey summary data, and EPA had sampling data for four

sites (two of these sites also provided ISMD). For two sites, EPA had multiple data sets (e.g., ISMD and EPA sampling data) that represented one operation or where the wastewater from the blast furnace and sintering operations was combined for treatment. To calculate the site-specific average baseline pollutant concentrations for each site, EPA averaged the site's multiple data sets together. For two of the sites with sampling data, EPA had data for only dioxins and furans. Ten sites had site-specific average baseline concentration data for ammonia as nitrogen, lead, and zinc; nine sites had data for total cyanide; and eight sites had data for TSS. Three sites with blast furnace wastewater only did not provide monitoring data, and EPA had no sampling data for those sites.

Determination of Subcategory-Specific Average Baseline Pollutant Concentrations

EPA used the subcategory-specific average baseline pollutant concentrations as a surrogate for site-specific average baseline pollutant concentrations when no data for a POC were available for an operation. For the ironmaking subcategory, EPA calculated the subcategory-specific average baseline pollutant concentrations based on the type of wastewater discharged. Different subcategory-specific averages were calculated for sites with blast furnace wastewater only and sites with commingled blast furnace and sintering wastewater.

For sites that discharged blast furnace wastewater only, EPA used ten data sets from nine sites: seven direct dischargers, one indirect discharger, and one zero (i.e., alternative) discharger. To expand the size of the data set, EPA used sampling data from a site located in Canada and the alternative discharging site because the data are representative of blast furnace ironmaking wastewater. (EPA did not calculate pollutant loadings and removals for the Canadian site or the alternative discharger because the Canadian site is outside the scope of this U.S. regulation and the alternative discharger does not discharge wastewater.) Data were not available for the indirect discharger for the conventional pollutants O&G or TSS; therefore, for this site, EPA used the average of available data from direct dischargers for these POCs. Table 11-7 presents the subcategory-specific average baseline pollutant concentrations for sites that discharge blast furnace wastewater only.

For sites that discharged commingled blast furnace and sintering wastewater, EPA used the available data from two direct dischargers that commingled their blast furnace and sintering wastewater to calculate the subcategory-specific average baseline concentration for POCs other than dioxins and furans. These two sites provided a total of three applicable effluent data sets: sampling data and ISMD data from one site and ISMD data from the other site. For dioxins and furans, EPA calculated subcategory-specific average baseline concentrations using dioxin and furan sampling data from a site with commingled blast furnace and sintering wastewater and from a site with sintering wastewater only. Table 11-8 presents the subcategory-specific average baseline pollutant concentrations for sites with commingled blast furnace and sintering wastewater.

The site that discharged sintering wastewater only had sampling data available for all POCs; therefore, EPA did not calculate subcategory-specific average baseline pollutant concentrations for this site.

Cotreatment

Five of the ironmaking sites discharged their wastewater to cotreatment systems. Although four of these sites provided cotreatment effluent data, EPA did not use any of these data because ironmaking wastewater comprises less than 90 percent of the influent to cotreatment. Two of the four sites with cotreatment effluent data also provided ironmaking effluent data (i.e., data from an internal monitoring point following dedicated in-process ironmaking wastewater treatment before entering cotreatment). One site provided only ironmaking effluent data. Although the cotreatment systems at these sites provide additional wastewater treatment, the data from the internal monitoring points were used to calculate baseline loadings for all three sites because EPA costed for upgrades to the dedicated ironmaking wastewater treatment systems at these sites to achieve the model effluent pollutant loadings. EPA used the subcategory-specific average baseline pollutant concentrations for the other two sites.

Baseline Pollutant Loadings

For sites that commingled their blast furnace and sintering wastewater, EPA estimated pollutant loadings and removals for both the blast furnace wastewater and sintering wastewater. EPA used this method in order to accurately estimate the pollutant loadings discharged by the commingled stream (e.g., the treatment system effluent concentration represents both blast furnace and sintering wastewater). EPA multiplied the combined wastewater effluent pollutant concentrations by the blast furnace wastewater flow and production to determine the blast furnace effluent pollutant loadings, and then multiplied the same effluent pollutant concentrations by the sintering wastewater flow and production to determine the sintering pollutant loadings. For example, Site X has a blast furnace and a sintering operation. The site reported the flow rate and production for each operation separately, but provided the treatment system effluent pollutant concentrations for the combined wastewater stream. EPA calculated pollutant loadings and removals for the blast furnace and sintering operations at Site X separately, using the PNF and production for each operation and the effluent pollutant concentrations for the combined wastewater stream. Finally, EPA summed the pollutant loadings and removals for the two operations to calculate the total pollutant loadings for the site.

Using the site-specific and subcategory-specific average baseline pollutant concentrations, baseline PNFs, and production, EPA calculated baseline pollutant loadings for the ironmaking subcategory using Equations 11-1 and 11-3. For indirect dischargers, EPA further adjusted the baseline pollutant loadings using Equation 11-2 to account for additional removals at the POTW. Tables 11-11 and 11-12 present the baseline pollutant loadings for direct and indirect dischargers, respectively, in the ironmaking subcategory.

11.8.2 Methodology Used to Estimate Treated Pollutant Loadings and Pollutant Removals

EPA estimated treated pollutant loadings for the ironmaking subcategory using the model PNFs and LTAs as shown in Equation 11-4. Table 13-1 presents the model PNFs for this subcategory. For the ironmaking subcategory, EPA calculated model LTAs for the regulated pollutants only. For the remaining POCs, EPA calculated the arithmetic mean of BAT performance data. See DCN IS10933 in Section 14.10 of the rulemaking record for more information. Tables 11-9 and 11-10 present the arithmetic means of BAT performance data for sites with blast furnace wastewater only and sites with commingled blast furnace and sintering wastewater, respectively. For indirect dischargers, EPA also adjusted the pollutant loadings using Equation 11-2 to account for additional removals at the POTW. Tables 11-11 and 11-12 present the treated pollutant loadings for direct and indirect dischargers, respectively, in the ironmaking subcategory.

EPA calculated pollutant removals for the ironmaking subcategory as the difference between the treated and baseline loadings using Equations 11-5. The pollutant removals for BAT-1 were 2,620,000 lbs/yr for conventional pollutants, 9,810,925 lbs/yr for nonconventional pollutants, and 100,570 lbs/yr for priority pollutants. The pollutant removals for PSES-1 were approximately 43,000 lbs/yr for nonconventional pollutants and 76.7 lbs/yr for priority pollutants. Tables 11-11 and 11-12 present the pollutant removals for direct and indirect dischargers, respectively, in the ironmaking subcategory.

The flow reduction for direct dischargers was 8.3 billion gallons per year, an 86-percent reduction. The indirect discharger had a flow reduction of 55 million gallons per year, a 70-percent reduction.

For more information regarding the calculation of pollutant loadings and removals for the ironmaking subcategory, see the Pollutant Loadings and Removals for the Ironmaking Subcategory memorandum in Section 14.7 of the Iron and Steel Rulemaking Record, DCN IS10837.

11.9 Pollutant Loadings and Removals for the Sintering Subcategory

EPA estimated pollutant loadings for the five sintering sites that generate and discharge process wastewater: five direct dischargers and zero indirect dischargers. Four of the sites discharged commingled blast furnace and sintering wastewater, and one site discharged sintering wastewater only.

For commingled blast furnace and sintering wastewater streams, EPA combined the POCs for the blast furnace and sintering segments for a total of 67 POCs. EPA estimated pollutant loadings for 45 of these 67 POCs. For wastewater streams from only sintering operations, EPA estimated pollutant loadings for 43 of the 65 POCs. The remaining POCs (listed in Table 11-1), were excluded from the pollutant loadings analysis because they were never detected in sintering effluent.

11.9.1 Methodology Used to Estimate Baseline Pollutant Loadings

EPA estimated baseline pollutant loadings for each sintering facility using available site-specific and subcategory-specific average baseline pollutant concentrations, the baseline PNFs, and the manufacturing operation production obtained from the industry surveys.

Determination of Site-Specific Average Baseline Pollutant Concentrations

EPA calculated site-specific average baseline pollutant concentrations to determine baseline pollutant loadings for each operation in the sintering subcategory. EPA used seven effluent concentration data sets from five direct dischargers to calculate the site-specific average baseline pollutant concentrations. Three sites provided industry self-monitoring data and EPA collected sampling data for four sites (two of the four sites also provided ISMD). For two sites, EPA had multiple data sets (e.g., industry self-monitoring data and EPA sampling data) that represented one operation or where the wastewater from the blast furnace and sintering operations was combined for treatment. To calculate the site-specific average baseline pollutant concentrations for each site, EPA averaged the site's multiple data sets together. EPA had dioxin and furan data for four of the five sites. Sampling data were collected for all POCs at two sites and for only dioxins and furans at two sites.

Determination of Subcategory-Specific Average Baseline Pollutant Concentrations

EPA used the subcategory-specific average baseline pollutant concentrations as a surrogate for site-specific average baseline pollutant concentrations when no data for a POC were available for an operation. For the sintering subcategory, EPA calculated the subcategory-specific average baseline pollutant concentrations based on the type of wastewater discharged. EPA calculated subcategory-specific average baseline pollutant concentrations for sites that commingle their sintering and blast furnace wastewater (i.e., data from the site that discharged sintering wastewater only were not included in the average). The site that discharged sintering wastewater only had sampling data available for all POCs; therefore, EPA did not calculate subcategory-specific average baseline pollutant concentrations for this site.

To calculate the subcategory-specific average baseline pollutant concentrations for sites that commingled blast furnace and sintering wastewater, EPA used three data sets from two direct discharging sites for all POCs, except dioxins and furans. Sampling data were available for one site with commingled blast furnace and sintering wastewater. For dioxins and furans, EPA calculated subcategory-specific average baseline concentrations using data from two sites: one site with sintering wastewater only and one site with commingled sintering and blast furnace wastewater. Table 11-13 presents the subcategory-specific average baseline pollutant concentrations used for sites that commingled their sintering and blast furnace wastewater.

Cotreatment

Two sintering sites discharge their wastewater to cotreatment systems. One site provided cotreatment effluent data; however, EPA did not use these data because sintering wastewater represented less than 4% of the influent to cotreatment. The other site did not provide cotreatment effluent data. Sintering effluent sampling data (i.e., data from an internal monitoring point following dedicated in-process sintering wastewater treatment before entering cotreatment) were available for both sites. EPA used the data from the internal monitoring points to calculate the baseline pollutant loadings for both sites, even though the cotreatment systems provide additional treatment of the wastewater. These data were used because EPA costed for upgrades to the sites' dedicated sintering wastewater treatment systems to achieve the model effluent pollutant loadings.

Baseline Pollutant Loadings Calculation

For sites that commingled their blast furnace and sintering wastewater, EPA estimated pollutant loadings and removals for both the blast furnace wastewater and sintering wastewater. EPA used this method in order to accurately estimate the pollutant loadings discharged by the commingled wastewater stream (e.g., the treatment system effluent concentration represents both blast furnace and sintering wastewater). EPA multiplied the combined wastewater effluent pollutant concentrations by the blast furnace wastewater flow and production to determine the blast furnace effluent pollutant loadings and then multiplied the same effluent pollutant concentrations by the sintering wastewater flow and production to determine the sintering pollutant loadings. For example, Site X has a blast furnace and a sintering operation. The site reported the flow rate and production for each operation separately, but provided the treatment system effluent pollutant concentrations for the combined wastewater stream. EPA calculated pollutant loadings and removals for the blast furnace and sintering operations at Site X separately, using the PNF and production for each operation and the effluent pollutant concentrations for the combined wastewater stream. Finally, EPA summed the pollutant loadings and removals for the two operations to calculate the total pollutant loadings for the site.

Using the site-specific and subcategory-specific average baseline pollutant concentrations, baseline PNFs, and production, EPA calculated baseline pollutant loadings for the sintering subcategory using Equations 11-1 and 11-3. Table 11-15 presents the baseline pollutant loadings for direct dischargers in the sintering subcategory.

11.9.2 Methodology Used to Estimate Treated Pollutant Loadings and Pollutant Removals

EPA estimated treated pollutant loadings for the sintering subcategory using the model PNFs and LTAs as shown in Equation 11-4. Table 13-1 presents the model PNFs for this subcategory. EPA calculated removals for only dioxins and furans using the analytical minimum levels as the treated effluent concentration (listed in Table 11-14) for dioxins and furans for the

sintering subcategory. Table 11-15 presents the treated pollutant loadings for direct dischargers in the sintering subcategory.

EPA calculated pollutant removals for the sintering subcategory as the difference between the treated and baseline pollutant loadings using Equation 11-5. For the sintering subcategory, EPA calculated removals only for dioxins and furans because those were the only parameters treated by the technology option under consideration. Therefore, the pollutant removals for BAT-1 were 0 lbs/yr for conventional pollutants and 0.00138 lbs/yr for priority and nonconventional pollutants. Table 11-15 presents the pollutant removals for direct dischargers in the sintering subcategory.

For more information regarding the calculation of pollutant loadings and removals for the sintering subcategory, see the Pollutant Loadings and Removals for the Sintering Subcategory memorandum in Section 14.7 of the Iron and Steel Rulemaking Record, DCN IS10844.

11.10 Pollutant Loadings and Removals for the Integrated Steelmaking Subcategory

EPA estimated pollutant loadings for the 19 direct dischargers with integrated steelmaking operations. There were no indirect dischargers in the integrated steelmaking subcategory. In addition, one integrated steelmaking site shut down operations permanently after 1997, and EPA was unable to verify costing assumptions and the site's reported high flow; therefore, this site was not included in the costing and loadings analyses.

The integrated steelmaking subcategory includes the following operations: basic oxygen furnace (BOF) steelmaking, vacuum degassing, and continuous casting. Sites with BOF processes may operate semi-wet, wet-open, or wet-suppressed air pollution control systems. Under the 1982 regulation, BOF operations with semi-wet air pollution control systems are required to achieve zero discharge; therefore EPA did not calculate pollutant loadings or removals for these operations. Section 5 describes in more detail the different types of BOF air pollution control systems. Of the 19 integrated steel sites, 8 generate wastewater from all three operations, 4 from BOF steelmaking and continuous casting, 3 from vacuum degassing and continuous casting, 1 from BOF steelmaking only, and 3 from continuous casting only. EPA calculated pollutant loadings and removals for BOF, vacuum degassing, and continuous casting wastewater streams separately for each site.

EPA estimated pollutant loadings for 19 of the 28 POCs for the integrated steelmaking subcategory. Two POCs were not included in the loadings analysis because they were not detected in integrated steelmaking effluent (listed in Table 11-1). Seven of the remaining nine POCs were excluded because they failed the influent editing criteria (listed in Table 11-2). See Section 14 for more information regarding the influent editing criteria and DCN IS10899 in Section 14.7 of the rulemaking record for the results of this analysis that were used for the pollutant loadings analysis.

EPA calculated percent removals for the integrated steelmaking subcategory using the influent and effluent data for the model facilities. For the BAT-1 option, nitrate/nitrite had negative percent removals for all the model facilities; therefore, EPA did not calculate pollutant removals for this POC. See Sections 12 and 14 for more information regarding the percent removals.

11.10.1 Methodology Used to Estimate Baseline Pollutant Loadings

EPA estimated baseline pollutant loadings for each integrated steelmaking facility using available site-specific and subcategory-specific average baseline pollutant concentrations, baseline PNFs and the manufacturing operation production obtained from the industry surveys.

Determination of Site-Specific Average Baseline Pollutant Concentrations

EPA calculated site-specific average baseline pollutant concentrations to determine baseline pollutant loadings for each operation in the integrated steelmaking subcategory. EPA used applicable effluent concentration data from 11 direct dischargers to calculate the site-specific average baseline pollutant concentrations. Nine sites provided ISMD, two sites provided survey summary data, and EPA collected sampling data for three sites. Eight of the nineteen sites did not provide any data and EPA did not have sampling data for these sites. For three sites, EPA had multiple data sets (e.g., industry self-monitoring data and EPA sampling data) that represented one operation or where the wastewater for several operations was combined for treatment. To calculate the site-specific average baseline pollutant concentrations for each site, EPA averaged the site's multiple data sets together. All 11 sites that provided applicable effluent data had site-specific average baseline concentration data for lead and zinc; 10 sites additionally provided applicable data for TSS. For 13 of the POCs, EPA only had sampling data for three sites.

Determination of Subcategory-Specific Average Baseline Pollutant Concentrations

EPA used the subcategory-specific average baseline pollutant concentrations as surrogates for site-specific average baseline pollutant concentrations when no data for a POC were available for an operation. For the integrated steelmaking subcategory, EPA calculated the subcategory-specific average baseline pollutant concentrations using sampling data from 3 sites and industry self-monitoring data from 10 sites. EPA sampled BOF and continuous casting wastewater from two sites, and BOF, vacuum degassing, and continuous casting wastewater from one site. Table 11-16 presents the subcategory-specific average baseline pollutant concentrations for the integrated steelmaking subcategory.

Cotreatment

Twelve of the integrated steelmaking sites discharge their wastewater to cotreatment systems. Although 11 of these sites provided cotreatment effluent data, EPA did not use these data because steelmaking wastewater comprised less than 90 percent of the total flow

through the cotreatment system; therefore, EPA considers the data to be not representative of steelmaking wastewater. In addition, at six of these sites, dilution water comprised more than 10 percent of the influent to cotreatment.

For seven of these sites, EPA had no other data; therefore, EPA used the subcategory-specific average baseline pollutant concentrations. Four of these sites also provided integrated steelmaking internal monitoring data (i.e., data from an internal monitoring point following dedicated in-process steelmaking wastewater treatment before entering cotreatment). Although the cotreatment systems at these sites provide additional wastewater treatment, the data from the internal monitoring points were used to calculate baseline loadings for all four sites because EPA costed for upgrades to the dedicated integrated steelmaking wastewater treatment systems at these sites to achieve the model effluent pollutant loadings. For one site, EPA had no data available; therefore, the Agency used the subcategory-specific average baseline pollutant concentrations to calculate the baseline loadings.

Baseline Pollutant Loadings Calculation

Using the site-specific and subcategory-specific average baseline pollutant concentrations, baseline PNFs, and production, EPA calculated baseline pollutant loadings for the integrated steelmaking subcategory using Equations 11-1 and 11-3. Table 11-18 presents the baseline pollutant loadings for direct dischargers in the integrated steelmaking subcategory.

11.10.2 Methodology Used to Estimate Treated Pollutant Loadings and Pollutant Removals

EPA estimated treated pollutant loadings for integrated steelmaking sites using the model PNFs and LTAs as shown in Equation 11-4. Table 13-1 presents the model PNFs for this subcategory. EPA calculated the arithmetic mean of BAT performance data for each POC for this subcategory (presented in Table 11-17). See DCN IS10587 in Section 14.10 of the rulemaking record for more information. Table 11-18 presents the treated pollutant loadings for direct dischargers in the integrated steelmaking subcategory.

EPA calculated pollutant removals for the integrated steelmaking subcategory as the difference between the treated and baseline pollutant loadings using Equation 11-5. The pollutant removals for BAT-1 were 892,000 lbs/yr for conventional pollutants, 4,310,000 lbs/yr for nonconventional pollutants, and 42,700 lbs/yr for priority pollutants. Table 11-18 presents the pollutant removals for direct dischargers in the integrated steelmaking subcategory.

The overall flow reduction for direct dischargers was 6.2 billion gallons per year, a 65-percent reduction.

For more information regarding the calculation of pollutant loadings and removals for the integrated steelmaking subcategory, see the Pollutant Loadings and Removals for the Integrated Steelmaking Subcategory memorandum in Section 14.7 of the Iron and Steel Rulemaking Record, DCN IS10838.

11.11 Pollutant Loadings and Removals for the Integrated and Stand-Alone Hot Forming Subcategory

EPA estimated the pollutant loadings and removals for 36 discharging integrated and stand-alone hot forming sites: 34 carbon and alloy steel and 2 stainless steel. Of the 34 carbon and alloy steel sites, 31 discharged directly and 3 discharged indirectly. Of the two stainless steel sites, both discharged indirectly. These sites represent a total industry population of approximately 52 sites (49 carbon and alloy steel and 3 stainless steel sites). One integrated and stand-alone hot forming site shut down all operations permanently after 1997, and EPA was unable to verify costing assumptions and the site's reported high flow; therefore, EPA removed this site from the costing and loadings analyses. EPA estimated pollutant loadings for all 11 POCs for the carbon and alloy steel segment and all 15 POCs for the stainless steel segment.

11.11.1 Methodology Used to Estimate Baseline Pollutant Loadings

EPA estimated baseline pollutant loadings for integrated and stand-alone hot forming sites using available site-specific and subcategory-specific average baseline pollutant concentrations, the baseline PNFs and the manufacturing operation production obtained from the industry surveys.

Determination of Site-Specific Average Baseline Pollutant Concentrations

EPA calculated site-specific average baseline pollutant concentrations to determine baseline pollutant loadings for each operation in the integrated and stand-alone hot forming subcategory. EPA used applicable effluent concentration data from 16 sites in the carbon and alloy segment: 1 indirect discharger and 15 direct dischargers. Eleven of the sites provided ISMD, five of the sites provided survey summary data, and EPA collected sampling data for three sites (all three sites also supplied industry self-monitoring data). Neither of the two stainless steel sites provided effluent data for the integrated and stand-alone hot forming subcategory. Three sites provided multiple data sets (e.g., two sites submitted industry self-monitoring and EPA sampling data and one site provided industry self-monitoring and permit application data) that represented the same operation or where the wastewater for several operations was combined for treatment. To calculate the site-specific average baseline pollutant concentrations for each site, EPA averaged the site's multiple data sets together. Of the 16 sites, 15 sites had site-specific average baseline concentration data for TSS, 10 sites additionally had data for iron, 7 sites additionally had data for zinc, and 6 sites additionally had data for lead.

Determination of Subcategory-Specific Average Baseline Pollutant Concentrations

EPA used the subcategory-specific average baseline pollutant concentrations as a surrogate for site-specific average baseline pollutant concentrations when no data for a POC were available for an operation. To calculate the subcategory-specific average baseline pollutant concentrations for the integrated and stand-alone hot forming subcategory, EPA averaged

available site-specific average baseline pollutant concentration data for the carbon and alloy and stainless steel segments separately.

For the carbon and alloy steel segment, 16 direct dischargers and 1 indirect dischargers provided a total of 23 applicable effluent data sets used to calculate the subcategory-specific average baseline pollutant concentrations. EPA used sampling effluent data from one of the Canadian sites because the data were representative of the integrated and stand-alone hot forming subcategory. (Pollutant loadings and removals were not calculated for the Canadian site because it was outside of the scope for this U. S. regulation.) For the subcategory-specific average baseline pollutant concentrations for indirect dischargers, data were not available for one conventional pollutant, O&G. For this pollutant, EPA used the subcategory-specific average baseline concentration for the direct dischargers as the average for indirect dischargers. Table 11-19 presents the subcategory-specific average baseline pollutant concentrations for the integrated and stand-alone hot forming subcategory, carbon and alloy steel segment.

For the stainless steel segment, no sites provided applicable effluent data; therefore, EPA transferred hot forming effluent data from the non-integrated steelmaking and hot forming subcategory, stainless steel segment to calculate the subcategory-specific average baseline pollutant concentrations. It was reasonable to transfer these data because water use and wastewater characteristics of stainless steel hot forming operations at non-integrated steel mills are similar to those at integrated and stand-alone hot forming mills. EPA did not transfer continuous casting effluent data from the non-integrated steelmaking and hot forming subcategory, stainless steel segment because the integrated and stand-alone hot forming subcategory applies only to hot forming operations. Instead, EPA used the effluent data from only the hot forming operations. EPA used four hot forming effluent data sets from three sites: sampling data for a direct discharger and an indirect discharger and ISMD for an indirect discharger. Table 11-20 presents the subcategory-specific average baseline pollutant concentrations for the integrated and stand-alone hot forming subcategory, stainless steel segment.

Cotreatment

Ten sites discharge their integrated and stand-alone hot forming wastewater to cotreatment systems and all of these sites provided cotreatment effluent data. For two of these sites, EPA used cotreatment effluent data to calculate baseline pollutant loadings. EPA did not use cotreatment effluent data for the remaining eight sites because either dilution water comprised greater than 10 percent of the influent to cotreatment or hot forming wastewater comprised less than 90 percent of the influent to cotreatment. One of the sites whose cotreatment effluent data were not used also provided hot forming effluent data (i.e., data from an internal monitoring point following dedicated in-process hot forming wastewater treatment before entering cotreatment). Although the cotreatment system provides additional treatment of this wastewater, the data from the internal monitoring point were used to calculate baseline pollutant loadings because EPA costed for upgrades to the site's dedicated hot forming wastewater treatment system to achieve the model effluent pollutant loadings. The remaining seven sites did

not provide any other data; therefore, EPA used the subcategory-specific average baseline pollutant concentrations to calculate the baseline pollutant loadings.

Baseline Pollutant Loadings Calculation

Using the site-specific and subcategory-specific average baseline pollutant concentrations, baseline PNFs, and production, EPA calculated baseline pollutant loadings for the integrated and stand-alone hot forming subcategory using Equations 11-1 and 11-3. For indirect dischargers, EPA also further adjusted the pollutant loadings using Equation 11-2 to account for additional removals at the POTW. Tables 11-23 and 11-24 present baseline pollutant loadings for direct and indirect dischargers in the carbon and alloy segment, respectively. Table 11-25 presents baseline pollutant loadings for indirect dischargers in the stainless steel segment.

11.11.2 Methodology Used to Estimate Treated Pollutant Loadings and Pollutant Removals

EPA estimated treated pollutant loadings for the integrated and stand-alone hot forming subcategory using the model PNFs and LTAs as shown in Equation 11-4. Table 13-1 presents the model PNFs for this subcategory. For the carbon and alloy steel segment, EPA calculated model LTAs for the regulated pollutants only. For the remaining POCs, EPA calculated the arithmetic mean of BAT performance data (presented in Table 11-21). See DCN IS10933 in Section 14.10 of the rulemaking record for more information. For the stainless steel segment, no performance data were available; therefore, EPA transferred the LTAs from the non-integrated steelmaking and hot forming, stainless steel segment, which are presented in Table 11-22. It was reasonable to transfer these data because water use and wastewater characteristics of stainless steel hot forming operations at non-integrated steel mills are similar to those at integrated and stand-alone hot forming mills. For indirect dischargers, EPA adjusted the treated pollutant loadings using Equation 11-2 to account for additional removals at the POTW. Tables 11-23 and 11-24 present treated pollutant loadings for direct and indirect dischargers in the carbon and alloy segment, respectively. Table 11-25 presents the treated pollutant loadings for indirect dischargers in the stainless steel segment.

EPA calculated pollutant removals for the integrated and stand-alone hot forming subcategory as the difference between the treated and baseline pollutant loadings, using Equation 11-5. For the carbon and alloy steel segment, the pollutant removals for BAT-1 were 35,300,000 lbs/yr for conventional pollutants, 12,290,000 lbs/yr for nonconventional pollutants, and 92,200 lbs/yr for priority pollutants. For PSES-1, the pollutant removals for the carbon and alloy steel segment were 5,610 lbs/yr for nonconventional pollutants and 9.14 lbs/yr for priority pollutants. Tables 11-23 and 11-24 present pollutant removals for direct and indirect dischargers in the carbon and alloy segment, respectively.

For the stainless steel segment, the pollutant removals for BAT-1 were 0 lbs/yr for nonconventional and priority pollutants because there were no direct dischargers. For the stainless steel segment, the pollutant removals for PSES-1 were approximately 1,270 lbs/yr for

nonconventional pollutants and 164 lbs/yr for priority pollutants. Table 11-25 presents pollutant removals for indirect dischargers in the stainless steel segment.

The flow reduction for the carbon and alloy steel segment direct dischargers was 120 billion gallons per year, a 95-percent reduction. The flow reduction for the carbon and alloy steel segment indirect dischargers was 57.1 million gallons per year, a 50-percent reduction. The flow reduction for the stainless steel segment indirect dischargers was 15.7 million gallons for the year, a 90-percent reduction.

For more information regarding the calculation of pollutant loadings and removals for the integrated and stand-alone hot forming subcategory, see the Pollutant Loadings and Removals for the Integrated and Stand-Alone Hot Forming Subcategory memorandum in Section 14.7 of the Iron and Steel Rulemaking Record, DCN IS10839.

11.12 Pollutant Loadings and Removals for the Non-Integrated Steelmaking and Hot Forming Subcategory

EPA calculated pollutant loadings for the 48 discharging non-integrated steelmaking and hot forming sites: 42 carbon and alloy steel and 6 stainless steel sites. Of the 42 carbon and alloy steel sites, 31 discharged directly, 10 discharged indirectly, and 1 discharged directly and indirectly. Of the six stainless steel sites, three discharged directly, two discharged indirectly, and one discharged directly and indirectly. These sites represent a total industry population of approximately 65 sites.

The non-integrated steelmaking and hot forming subcategory includes the following operations: vacuum degassing, continuous casting, and hot forming. Of the 48 non-integrated steelmaking and hot forming sites, 10 generated wastewater from all three operations, 28 from continuous casting and hot forming, 3 from vacuum degassing and hot forming, 4 from hot forming only, 2 from continuous casting only, and 1 from vacuum degassing only.

EPA estimated pollutant loadings for all 15 POCs for the carbon and alloy steel segment and for 21 of the 22 POCs for the stainless steel segment. One POC for the stainless steel segment, tribromomethane, was never detected in the effluent at any stainless steel sites and, therefore, was not included in the loadings analysis.

11.12.1 Methodology Used to Estimate Baseline Pollutant Loadings

EPA estimated baseline pollutant loadings for each non-integrated steelmaking and hot forming facility using available site-specific and subcategory-specific average baseline pollutant concentrations, the baseline PNFs, and the manufacturing operation production obtained from the industry surveys.

Determination of Site-Specific Average Baseline Pollutant Concentrations

EPA calculated site-specific average baseline pollutant concentrations to determine baseline pollutant loadings for each operation in the non-integrated steelmaking and hot forming subcategory. EPA used applicable effluent concentration data for 18 carbon and alloy steel sites and 3 stainless steel sites to calculate the site-specific average baseline pollutant concentrations. Twelve sites provided industry self-monitoring data, 10 sites provided survey summary data, 1 site provided permit application data, and EPA collected sampling data for 3 sites. For three sites, EPA had multiple data sets (i.e., one site had self-monitoring and EPA sampling data, one site had survey summary and EPA sampling data and the remaining site had self-monitoring and permit application data) that represented one operation. To calculate the site-specific average baseline pollutant concentrations for the site that provided self-monitoring and permit application data, EPA used the industry self-monitoring data only. To calculate the site-specific average baseline pollutant concentrations for the remaining two sites, EPA averaged the sites' multiple data sets together. One non-integrated site provided data for a pressure casting operation. EPA did not use these data to calculate the site-specific average baseline pollutant concentrations because pressure casting operations are not covered by this regulation. Twenty-six of the surveyed sites did not provide effluent concentration data, and EPA had no sampling data for these sites. Most of the sites that provided data monitored for lead, total suspended solids, and zinc. Several also monitored for copper and O&G.

Determination of Subcategory-Specific Average Baseline Pollutant Concentrations

EPA used the subcategory-specific average baseline pollutant concentrations as a surrogate for site-specific average baseline pollutant concentrations when no data for a POC were available for an operation. For the non-integrated steelmaking and hot forming subcategory, EPA calculated separate subcategory-specific average baseline pollutant concentrations for the carbon and alloy and stainless steel segments.

For the carbon and alloy steel segment, 12 direct dischargers, 7 indirect dischargers, and 1 site that discharges both directly and indirectly provided a total of 25 applicable effluent data sets used to calculate the subcategory-specific average baseline pollutant concentrations. One of the direct dischargers did not begin operation until after 1997. However, to expand the size of the data set, EPA included this site's data in the calculation of the subcategory-specific average baseline pollutant concentrations because the data are representative of carbon and alloy steel sites. EPA also used data from a pressure casting operation at one site to calculate the subcategory-specific average baseline pollutant concentrations for the carbon and alloy steel segment of the non-integrated subcategory because the data represent non-integrated steelmaking and hot forming wastewater characteristics. Table 11-26 presents the subcategory-specific average baseline pollutant concentrations used for the 15 POCs for both direct and indirect dischargers.

For the stainless steel segment, one direct discharger and two indirect dischargers provided a total of seven applicable effluent data sets used to calculate the subcategory-specific

average baseline pollutant concentrations. Table 11-27 presents the subcategory-specific average baseline pollutant concentrations used for the 21 POCs for both direct and indirect dischargers.

Cotreatment

Two non-integrated steelmaking and hot forming sites discharged their wastewater to cotreatment systems. These sites did not provide cotreatment effluent data or non-integrated steelmaking and hot forming effluent data (i.e., data from an internal monitoring point following dedicated in-process non-integrated steelmaking and hot forming wastewater treatment before entering cotreatment). EPA used the subcategory-specific average baseline pollutant concentrations to calculate pollutant loadings for these sites.

Baseline Pollutant Loadings Calculation

Using the site-specific and subcategory-specific average baseline pollutant concentrations, baseline PNFs, and production, EPA calculated baseline pollutant loadings for the non-integrated steelmaking and hot forming subcategory using Equations 11-1 and 11-3. For indirect dischargers, EPA further adjusted the pollutant loadings using Equation 11-2 to account for additional removals at the POTW. Tables 11-30 and 11-32 present the baseline pollutant loadings for direct and indirect dischargers, respectively, in the carbon and alloy steel segment. Tables 11-31 and 11-33 present the baseline pollutant loadings for direct and indirect dischargers, respectively, in the stainless steel segment.

For some sites, industry survey information were insufficient to calculate a site's baseline PNF; therefore, EPA used the model PNF to estimate baseline pollutant loadings for that site.

11.12.2 Methodology Used to Estimate Treated Pollutant Loadings and Pollutant Removals

EPA estimated treated pollutant loadings for the non-integrated steelmaking and hot forming subcategory using the model PNFs and LTAs as shown in Equation 11-4. Table 13-1 presents the model PNFs for this subcategory. Table 11-28 presents the LTAs for the carbon and alloy steel segment. See DCN IS10927 of Section 14.10 of the rulemaking record for more information. For the stainless steel segment, EPA calculated model LTAs for the regulated POCs only. For the remaining POCs, EPA calculated the arithmetic mean of BAT performance data (presented in Table 11-29). See DCN IS10933 in Section 14.10 of the rulemaking record for more information. For indirect dischargers, EPA further adjusted the pollutant loadings using Equation 11-2 to account for additional removals at the POTW. Tables 11-30 and 11-32 present the treated pollutant loadings for direct and indirect dischargers, respectively, in the carbon and alloy steel segment. Tables 11-31 and 11-33 present the treated pollutant loadings for direct and indirect dischargers, respectively, in the stainless steel segment.

EPA calculated pollutant removals for the non-integrated steelmaking and hot forming subcategory as the difference between the baseline and treated pollutant loadings using

Equation 11-5. For the carbon and alloy steel segment, the pollutant removals for BAT-1 were 2,850,000 lbs/yr for conventional pollutants, approximately 447,000 lbs/yr for nonconventional pollutants, and 12,600 lbs/yr for priority pollutants. For PSES-1, the pollutant removals were approximately 1,380 lbs/yr for nonconventional pollutants and 67.6 lbs/yr for priority pollutants. Tables 11-30 and 11-32 present the pollutant removals for direct and indirect dischargers, respectively, in the carbon and alloy segment.

For the stainless steel segment, the pollutant removals for BAT-1 were 17,100 lbs/yr for conventional pollutants, 52,400 lbs/yr for nonconventional pollutants, and 2,440 lbs/yr for priority pollutants. For PSES-1, the pollutant removals were approximately 27,400 lbs/yr for nonconventional pollutants and 722 lbs/yr for priority pollutants. Tables 11-31 and 11-33 present the pollutant removals for direct and indirect dischargers, respectively, in the stainless steel segment.

For carbon and alloy steel sites, EPA estimated the flow reductions for direct dischargers to be 14.8 billion gallons per year, an 89-percent reduction. For carbon and alloy indirect dischargers, EPA estimated the flow reduction to be 137 million gallons per year, a 23-percent reduction. For stainless steel sites, EPA estimated the flow reductions for direct dischargers to be 101 million gallons per year, a 48-percent reduction. For stainless steel indirect dischargers, EPA estimated the flow reduction to be 104 million gallons per year, an 89-percent reduction.

For more information regarding the calculation of pollutant loadings and removals for the non-integrated steelmaking and hot forming subcategory, see the Pollutant Loadings and Removals for the Non-Integrated Steelmaking and Hot Forming memorandum in Section 14.7 of the Iron and Steel Rulemaking Record, DCN IS10840.

11.13 Pollutant Loadings and Removals for the Steel Finishing Subcategory

EPA estimated the pollutant loadings and removals for 84 discharging steel finishing sites: 63 carbon and alloy steel and 21 stainless steel sites. Of the 63 carbon and alloy steel sites, 41 discharged directly, 21 discharged indirectly, and 1 discharged both directly and indirectly. Of the 21 stainless steel sites, 11 discharged directly, 7 discharged indirectly, and 3 discharged both directly and indirectly. These sites represent a total industry population of approximately 110 sites. One steel finishing site shut down all operations permanently after 1997 and EPA was unable to verify costing assumptions and the site's reported high flow; therefore, EPA removed this site from the costing and loadings analyses.

For the pollutant loadings analysis, the steel finishing subcategory includes the following operations: acid pickling, cold forming, alkaline cleaning, continuous annealing, hot coating, and electroplating. Of the 84 steel finishing sites included in the loadings analysis, 45 sites had cold forming operations, 57 sites had acid pickling operations, 21 sites had alkaline cleaning operations, 26 sites had hot coating operations, 23 had electroplating operations, 7 sites had annealing operations, and 3 sites had descaling operations. Most of the sites in the steel finishing subcategory had multiple operations.

EPA estimated pollutant loadings and removals for 29 of the 37 POCs in the carbon and alloy steel segment and 32 of the 49 POCs in the stainless steel segment. The remaining POCs (listed in Table 11-1) were not included in the loadings analysis because these POCs were never detected in steel finishing effluent.

11.13.1 Methodology Used to Estimate Baseline Pollutant Loadings

EPA estimated baseline pollutant loadings for each steel finishing facility using available site-specific and subcategory-specific average baseline pollutant concentrations, the baseline PNFs, and manufacturing operation production obtained from the industry surveys.

Determination of Site-Specific Average Baseline Pollutant Concentrations

EPA calculated site-specific average baseline pollutant concentrations to determine baseline pollutant loadings for the each operation in the steel finishing subcategory. For the carbon and alloy steel segment, EPA used applicable effluent data for 26 sites: 19 direct dischargers and 7 indirect dischargers. Ten sites provided survey summary data, 16 sites provided ISMD, and EPA collected sampling data for 4 sites (all 4 sites also provided ISMD). For the stainless steel segment, EPA used applicable effluent data for 13 sites: 9 direct dischargers and 4 indirect dischargers. Six sites provided survey summary data, five sites provided ISMD, and two sites provided sampling data. For five carbon and alloy steel sites, EPA had multiple data sets (e.g., one site had two industry self-monitoring data sets and fours sites had sampling data and industry self-monitoring data) that represented one operation or where the wastewater for several operations was combined for treatment. To calculate the site-specific average baseline pollutant concentrations for each site, EPA averaged the site's multiple data sets together.

Of the 26 carbon and alloy steel sites, 25 sites had data for zinc, 23 sites had data for TSS, and 22 sites had data for lead. All 13 stainless steel sites had data for chromium and nickel. Of the 13 stainless steel sites, 10 sites had data for TSS, 9 sites had data for copper, and 8 sites had data for lead and zinc.

Determination of Subcategory-Specific Average Baseline Pollutant Concentrations

EPA used the subcategory-specific average baseline pollutant concentrations as a surrogate for site-specific average baseline pollutant concentrations when no data for a POC were available for an operation. To calculate the subcategory-specific average baseline concentrations for the steel finishing subcategory, EPA averaged available site-specific average baseline concentration data for the carbon and alloy and stainless steel segments separately.

For the carbon and alloy steel segment, 18 direct dischargers and 8 indirect dischargers provided a total of 35 applicable effluent data sets used to calculate the subcategory-specific average baseline concentrations. In addition, to expand the size of the data set, EPA used effluent data from a Canadian mill to calculate subcategory-specific average baseline

concentrations for the carbon and alloy segment because EPA considers data from this site to represent carbon and alloy steel finishing wastewater characteristics. (EPA did not calculate pollutant loadings and removals for this site because it is outside the scope of this U.S. regulation.) Table 11-34 presents the subcategory-specific average baseline pollutant concentrations for the steel finishing subcategory, carbon and alloy steel segment.

For the stainless steel segment, nine direct dischargers and four indirect dischargers provided a total of 14 applicable effluent data sets used to calculate the subcategory-specific average baseline concentrations. For the subcategory-specific average baseline concentrations for indirect dischargers, data were not available for one conventional pollutant, O&G. For this pollutant, EPA used the subcategory-specific average baseline concentration for the direct dischargers as the average for indirect dischargers. Table 11-35 presents the subcategory-specific average baseline pollutant concentrations for the steel finishing subcategory, stainless steel segment.

One site in the steel finishing subcategory is a carbon and alloy steel site with a stainless steel operation. To simplify the pollutant loadings and removal analyses for this site, EPA used the carbon and alloy steel segment POCs for both the carbon and alloy steel and stainless steel operations. Since this site did not provide effluent data for the stainless steel operation, EPA used subcategory-specific average baseline concentrations for the stainless steel segment to fill data gaps for this site. However, because some POCs in the carbon and alloy steel segment are not stainless steel POCs, EPA used the subcategory-specific average baseline concentrations for the carbon and alloy steel segment to fill the remaining data gaps.

Cotreatment

Eleven of the steel finishing sites discharged their wastewater to cotreatment systems. Ten of these sites provided cotreatment effluent data. EPA used the cotreatment effluent data to calculate baseline pollutant loadings for one site because steel finishing wastewater comprises 99.5 percent of the influent to cotreatment for this site. EPA did not use the cotreatment effluent data for nine sites because either dilution water comprised greater than 10 percent of the influent to cotreatment or steel finishing wastewater comprised less than 90 percent of the influent to cotreatment; therefore, EPA considers the data to be not representative of steel finishing wastewater.

For eight of the nine remaining sites with cotreatment data, EPA had no other data; therefore, EPA used the subcategory-specific average baseline pollutant concentrations. One of the nine sites with cotreatment data also provided steel finishing effluent data (i.e., data from an internal monitoring point following dedicated in-process steel finishing wastewater treatment before entering cotreatment). For this site, EPA used the steel finishing data because these data were used to determine that this site achieves model loadings and no treatment system upgrades are necessary. For the one site that did not provide cotreatment effluent data, EPA had no other data; therefore, EPA used the subcategory-specific average baseline pollutant concentrations to calculate baseline pollutant loadings.

Baseline Pollutant Loadings Calculation

For some sites in the steel finishing subcategory, industry survey information was insufficient to calculate an operation's baseline PNF; therefore, EPA calculated a surrogate PNF to calculate the baseline pollutant loadings. EPA calculated surrogate PNFs by transferring PNFs from other sites with similar operations and production within a segment/subcategory.

Using the site-specific and subcategory-specific average baseline concentrations, baseline PNFs, and production, EPA calculated baseline pollutant loadings for the steel finishing subcategory using Equations 11-1 and 11-3. For indirect dischargers, EPA further adjusted the baseline pollutant loadings using Equation 11-2 to account for additional removals at the POTW. Tables 11-38 and 11-40 present the baseline pollutant loadings for direct and indirect dischargers, respectively, in the carbon and alloy steel segment. Tables 11-39 and 11-41 present the baseline pollutant loadings for direct and indirect dischargers, respectively, in the stainless steel segment.

11.13.2 Methodology Used to Estimate Treated Pollutant Loadings and Pollutant Removals

EPA estimated treated pollutant loadings for the steel finishing subcategory using the model PNFs and LTAs as shown in Equation 11-4. Table 13-1 presents the model PNFs for this subcategory. Table 11-36 presents the arithmetic mean of BAT performance data for each POC for the carbon and alloy steel segment. See DCN IS10813 in Section 14.10 of the rulemaking record for more information. For the stainless steel segment, EPA calculated LTAs for the regulated pollutants only. For the remaining POCs, EPA calculated the arithmetic mean of BAT performance data (presented in Table 11-37). See DCN IS10933 in Section 14.10 of the rulemaking record for more information. For indirect dischargers, EPA further adjusted the treated pollutant loadings using Equation 11-2 to account for additional removals at the POTW. For the site that is a carbon and alloy steel finishing site with a stainless steel finishing operation, EPA used stainless steel segment LTAs for the stainless steel POCs and used the carbon and alloy steel segment LTAs for the remaining POCs to calculate the treated pollutant loadings. Tables 11-38 and 11-40 present the treated pollutant loadings for direct and indirect dischargers, respectively, in the carbon and alloy steel segment. Tables 11-39 and 11-41 present the treated pollutant loadings for direct and indirect dischargers, respectively, in the stainless steel segment.

EPA calculated pollutant removals for the steel finishing subcategory as the difference between the treated and baseline pollutant loadings, using Equation 11-5. For the carbon and alloy steel segment, the pollutant removals for BAT-1 were 1,850,000 lbs/yr for conventional pollutants, 758,000 lbs/yr for nonconventional pollutants, and approximately 54,500 lbs/yr for priority pollutants. The pollutant removals for PSES-1 were 5,340 lbs/yr for nonconventional pollutants and 458 lbs/yr for priority pollutants. Tables 11-38 and 11-40 present the pollutant removals for direct and indirect dischargers, respectively, in the carbon and alloy steel segment.

For the stainless steel segment, the pollutant removals for BAT-1 were 844,000 lbs/yr for conventional pollutants, approximately 22,040,000 lbs/yr for nonconventional pollutants, and 36,800 lbs/yr for priority pollutants. The pollutant removals for PSES-1 were 127,900 lbs/yr for nonconventional pollutants and 323 lbs/yr for priority pollutants. Tables 11-39 and 11-41 present the pollutant removals for direct and indirect dischargers, respectively, in the stainless steel segment.

The flow reduction for the carbon and alloy steel segment direct dischargers was 11.7 billion gallons per year, a 44-percent reduction. The flow reduction for the carbon and alloy steel segment indirect dischargers was 305 million gallons per year, a 29-percent reduction. The flow reduction for the stainless steel segment direct dischargers was 2.84 billion gallons per year, a 46-percent reduction. The flow reduction for the stainless steel segment indirect dischargers was 57.6 million gallons per year, a 23-percent reduction.

For more information regarding the calculation of pollutant loadings and removals for the steel finishing subcategory, see the Pollutant Loadings and Removals for the Steel Finishing Subcategory memorandum in Section 14.7 of the Iron and Steel Rulemaking Record, DCN IS10841.

11.13.3 Alternative Methodology to Estimate Pollutant Loadings and Removals for the Steel Finishing Subcategory

EPA performed an additional analysis for the steel finishing subcategory, carbon and alloy steel segment, to determine the pollutant loadings and removals using concentration-based limitations. EPA used the same general methodology to calculate pollutant loadings and removals for this analysis, except flow reductions were not calculated (i.e., the model PNFs were set equal to the baseline PNFs for all operations and sites).

Using this alternative methodology, for the carbon and alloy steel segment, the pollutant removals for BAT-1 were 94,500 lbs/yr for nonconventional and priority pollutants. For PSES-1, the pollutant removals were 766 lbs/yr for nonconventional and priority pollutants.

11.14 Pollutant Loadings and Removals for the Other Operations Subcategory

EPA calculated pollutant loadings for the one direct-reduced iron (DRI) site and five forging sites that generate and discharge process wastewater for the BPT option. These sites represent a total industry population of approximately nine sites for the BPT option. EPA did not calculate pollutant loadings for indirect dischargers because BPT limitations are not applicable.

For DRI, EPA estimated pollutant loadings for 7 of the 10 POCs. Three POCs were not included in the analysis for the following reasons: one POC was never detected in DRI effluent (listed in Table 11-1) and two POCs failed the influent editing criteria (listed in Table 11-2). See Section 14 for more information regarding the influent editing criteria. For forging, EPA estimated pollutant loadings and removals for O&G and TSS.

11.14.1 Methodology Used to Estimate Baseline Pollutant Loadings

EPA estimated baseline pollutant loadings for each facility using available site-specific and subcategory-specific average baseline pollutant concentrations, the baseline PNFs and the manufacturing operation production obtained from the industry surveys.

Determination of Site-Specific Average Baseline Pollutant Concentrations

EPA calculated site-specific average baseline pollutant concentrations to determine baseline pollutant loadings for each operation in the other operations subcategory. For the DRI segment, EPA used two effluent data sets from one direct discharger to calculate the site-specific average baseline pollutant concentrations. One site provided industry self-monitoring data, and EPA collected sampling data for the same site. For the forging segment, EPA used three effluent data sets from two direct dischargers to calculate the site-specific average baseline pollutant concentrations. Two sites provided industry self-monitoring data. One DRI site and one forging site submitted multiple data sets (i.e., the DRI site had industry self-monitoring data and EPA sampling data and one of the forging sites provided industry self-monitoring data and survey summary data) that represented one operation or where the wastewater for several operations was combined for treatment. To calculate the site-specific average baseline pollutant concentrations for the DRI site, EPA averaged the site's multiple data sets together. For the forging site, EPA used the industry self-monitoring data and when no industry self-monitoring data were available for a POC, EPA used survey summary data.

Determination of Subcategory-Specific Average Baseline Pollutant Concentrations

EPA used the subcategory-specific average baseline pollutant concentrations as a surrogate for site-specific average baseline pollutant concentrations when no data for a POC were available for an operation. To calculate the subcategory-specific average baseline pollutant concentrations for sites with forging operations, EPA used the three data sets from two sites. Table 11-42 presents the subcategory-specific average baseline pollutant concentrations for forging operations. EPA did not calculate subcategory-specific average baseline pollutant concentrations for sites with DRI operations because there was only one direct discharger with DRI operations, and this site supplied data for all the POCs.

Baseline Pollutant Loadings Calculation

Using the site-specific and subcategory-specific average baseline pollutant concentrations and baseline PNFs, EPA calculated baseline pollutant loadings for the other operations subcategory using Equations 11-1 and 11-3. Because EPA established only BPT limitations, EPA did not calculate baseline pollutant loadings for indirect dischargers. Tables 11-45 and 11-46 present the baseline pollutant loadings for the DRI and forging segments, respectively.

11.14.2 Methodology Used to Estimate Treated Pollutant Loadings and Pollutant Removals

EPA estimated treated pollutant loadings for the other operations subcategory using the model PNFs and LTAs as shown in Equation 11-4. Table 13-1 presents the model PNFs for this subcategory. For the DRI segment, EPA calculated model LTAs for regulated pollutants only. See DCN IS10933 in Section 14.10 of the rulemaking record for more information. For the remaining POCs, EPA calculated the arithmetic mean of BAT performance data. See DCN IS10895 in Section 14.10 of the rulemaking record for more information. Table 11-43 presents the arithmetic means of BAT performance data for the DRI segment. For the forging segment, EPA calculated the arithmetic mean of BAT performance data for each POC (presented in Table 11-44). See DCN IS10814 in Section 14.10 of the rulemaking record for more information. Because EPA established only BPT limitations, EPA did not calculate treated pollutant loadings for indirect dischargers. Tables 11-45 and 11-46 present the treated pollutant loadings for the DRI and forging segments, respectively.

EPA calculated pollutant removals for the other operations subcategory as the difference between the treated and baseline pollutant loadings using Equation 11-5. For DRI, the pollutant removals for BPT were 1,380 lbs/yr for conventional pollutants and approximately 5,680 lbs/yr nonconventional pollutants. For forging, the pollutant removals for BPT were 3,570 lbs/yr for conventional pollutants. Tables 11-45 and 11-46 present the pollutant removals for the DRI and forging segments, respectively.

For DRI, EPA estimated a 30-percent reduction in flow. For forging, EPA estimated flow reductions to be 4.6 million gallons per year, a 27-percent reduction.

For more information regarding the calculation of pollutant loadings and removals for the other operations subcategory, see the Pollutant Loadings and Removals for the Other Operations Subcategory memorandum in Section 14.7 of the Iron and Steel Rulemaking Record, DCN IS10843.

11.15 References

11-1 U.S. Environmental Protection Agency. Fate of Priority Pollutants in Publicly Owned Treatment Works. EPA 440/1-82/303, Washington, D.C., September 1982.

11-2 U.S. Environmental Protection Agency. National Risk Management Research Laboratory (NRMRL) Treatability Database Version 5.0. Cincinnati, OH, 1994.

11-3 American Public Health Association, American Water Works Association, and Water Environment Federation. Standard Methods for the Examination of Water and Wastewater 19th Edition, Washington, D.C., 1995.

11-4 U.S. Environmental Protection Agency. Development Document for Effluent Guidelines and Standards for the Iron and Steel Manufacturing Point Source Category. Volume 1. EPA 440/1-82/024, Washington, D.C., May 1982.

Table 11-1

Pollutants of Concern Not Detected in Effluent at Any Site

Subcategory	Segment	Pollutant Group	Pollutant by Concern
Cokemaking	By-Product Recovery Cokemaking	Nonconventional pollutants, other (a)	Total petroleum hydrocarbons (TPH)
		Priority organic pollutants	Acenaphthene
			Acenaphthylene
			Anthracene
			Benzidine
			Benzo(ghi)perylene
			1,2-Dichloroethane
			Ethylbenzene
			Fluorene
			Indeno(1,2,3-cd)pyrene
			Toluene
		Nonconventional organic pollutants	2,3-benzofluorene
			beta-Naphthylamine
			Biphenyl
			2-Butanone
			Carbazole
			Carbon disulfide
			Dibenzothiophene
			4,5-Methylene phenanthrene
			1-Methylphenanthrene
			1-Naphthylamine
			m- + p-Xylene
			m-Xylene
			n-Hexadecane
			o- + p-Xylene
			o-Xylene
			Perylene

Table 11-1 (Continued)

Subcategory	Segment	Pollutant Group	Pollutant by Concern
Cokemaking (cont.)	By-Product Recovery Cokemaking (cont.)	Nonconventional organic pollutants (cont.)	2-Picoline
			Styrene
			Thianaphthene
	Non-recovery Cokemaking	NA	NA
Ironmaking	Blast Furnace Ironmaking	Nonconventional pollutants, other (a)	Total petroleum hydrocarbons (TPH)
		Nonconventional organic pollutants	1,2,3,4,6,7,8-Heptachlorodibenzo-p-dioxin
	Sintering	Nonconventional pollutants, other (a)	Total petroleum hydrocarbons (TPH)
		Priority metals	Silver
		Priority organic pollutants	Benzo(a)anthracene
			Benzo(a)pyrene
			Benzo(b)fluoranthene
			Benzo(k)fluoranthene
			Chrysene
			Pyrene
		Nonconventional organic pollutants	1,2,3,4,6,7,8-Heptachlorodibenzo-p-dioxin
			1,2,3,4,7,8,9-Heptachlorodibenzofuran
			1,2,3,7,8,9-Hexachlorodibenzofuran
			1,2,3,4,7,8-Hexachlorodibenzo-p-dioxin
			1,2,3,6,7,8-Hexachlorodibenzo-p-dioxin
			1,2,3,7,8,9-Hexachlorodibenzo-p-dioxin
			n-Docosane
			n-Eicosane
			n-Hexadecane
			n-Octadecane
			n-Tetracosane
			Octachlorodibenzofuran
			Octachlorodibenzo-p-dioxin
			1,2,3,7,8-Pentachlorodibenzo-p-dioxin

Table 11-1 (Continued)

Subcategory	Segment	Pollutant Group	Pollutant by Concern
Integrated Steelmaking	NA	Priority metals	Beryllium
			Nickel
Integrated and Stand-Alone Hot Forming	Carbon and Alloy Steel	(b)	(b)
	Stainless Steel	(b)	(b)
Non-Integrated Steelmaking and Hot Forming	Carbon and Alloy Steel	(b)	(b)
	Stainless Steel	Priority organic pollutants	Tribromomethane
Finishing	Carbon and Alloy Steel	Priority metals	Selenium
		Priority organic pollutants	1,1,1-Trichloroethane
		Nonconventional organic pollutants	Benzoic acid
			n-Eicosane
			n,n-Dimethylformamide
			n-Octadecane
			n-Tetradecane
	Stainless Steel	Priority metals	Cadmium
			Selenium
		Nonconventional metals	Vanadium
		Priority organic pollutants	Ethylbenzene
			Naphthalene
			Phenol
			Toluene
		Nonconventional organic pollutants	Benzoic acid
			2,6-Di-tert-butyl-p-benzoquinone
			2-Methylnaphthalene
			m-Xylene
			n-Docosane
			n-Eicosane
			n-Octadecane
			n-Tetracosane

Table 11-1 (Continued)

Subcategory	Segment	Pollutant Group	Pollutant by Concern
Finishing (cont.)	Stainless Steel (cont.)	Nonconventional organic pollutants (cont.)	n-Tetradecane
			o- + p-Xylene
Other Operations	DRI	Nonconventional metals	Titanium
	Forging	(c)	(c)

(a) Nonconventional pollutants other than nonconventional metals and nonconventional organic pollutants.
(b) No POCs were excluded for this segment.
(c) EPA did not identify POCs for forging.

NA - Not applicable.

Sources: U.S. EPA, U.S. EPA Collection of 1997 Iron and Steel Industry Data (Detailed and Short Surveys), U.S. EPA Analytical and Production Data Follow-Up to the Collection of 1997 Iron and Steel Industry Data (Analytical and Production Survey), and U.S. EPA Iron and Steel Industry Wastewater Sampling Program, 1997-1999.

Table 11-2

Pollutants of Concern That Failed the Influent Editing Criteria

Subcategory	Segment	Pollutant Group	Pollutant of Concern
Cokemaking	By-Product Recovery Cokemaking	Priority metals	Arsenic
		Nonconventional metals	Boron
		Priority organic pollutants	Benzo(k)fluoranthene
		Nonconventional organic pollutants	o-Toluidine
	Non-recovery Cokemaking	NA	NA
Ironmaking	Blast Furnace Ironmaking	(a)	(a)
	Sintering	(a)	(a)
Integrated Steelmaking	NA	Conventional pollutants	Oil and grease (O&G)
		Nonconventional pollutants, other (b)	Total petroleum hydrocarbons (TPH)
		Priority metals	Antimony
			Mercury
			Silver
		Nonconventional metals	Cobalt
		Priority organic pollutants	Phenol
Integrated and Stand-Alone Hot Forming	Carbon and Alloy Steel	(a)	(a)
	Stainless Steel	(a)	(a)
Non-Integrated Steelmaking and Hot Forming	Carbon and Alloy Steel	(c)	(c)
	Stainless Steel	(a)	(a)
Finishing	Carbon and Alloy Steel	(a)	(a)
	Stainless Steel	(a)	(a)

Table 11-2 (Continued)

Subcategory	Segment	Pollutant Group	Pollutant of Concern
Other Operations	DRI	Conventional pollutants	Oil and grease (O&G)
		Nonconventional pollutants, other (b)	Total petroleum hydrocarbons (TPH)
	Forging	(d)	(d)

(a) EPA did not apply the influent editing criteria to these segments. See Section 14.7, DCN IS10834 in the rulemaking record for a detailed discussion of application of the influent editing criteria.
(b) Nonconventional pollutants other than nonconventional metals and nonconventional organic pollutants.
(c) EPA did not apply the influent editing criteria to the non-integrated steelmaking and hot forming carbon and alloy segment because paired data were not available.
(d) EPA did not identify POCs for forging.

NA - Not applicable.

Note: This table does not include POCs listed in Table 11-1.

Table 11-3

POTW Percent Removals

Pollutant	Percent Removal	Data Source
Conventional Pollutants		
Biochemical oxygen demand 5-day (BOD_5) - carbonaceous	91%	Transfer from BOD_5 (50-POTW Study - data >10 × ML)
Oil and grease (O&G)	87%	Used O&G percent removal (50-POTW Study - data >10 × ML)
Total suspended solids (TSS)	90%	50-POTW Study - data >10 × ML
Nonconventional Pollutants, Other (a)		
Amenable cyanide	93%	Transfer from WAD cyanide
Ammonia as nitrogen	39%	50-POTW Study - data >10 × ML
Chemical oxygen demand (COD)	81%	50-POTW Study - data >10 × ML
Fluoride	54%	NRMRL Treatability Database (all wastewaters)
Nitrate/nitrite (NO2 + NO3-N)	90%	Transfer from TKN
Thiocyanate	70%	Transfer from total cyanide
Total Kjeldahl nitrogen (TKN)	90%	Based on data from POTWs receiving iron and steel wastewater
Total petroleum hydrocarbons (TPH)	87%	Used O&G percent removal (50-POTW Study - data >10 × ML)
Total organic carbon (TOC)	70%	50-POTW Study - data >10 × ML
Total phenols	77%	50-POTW Study - data >10 × ML
Weak acid dissociable (WAD) cyanide	93%	Based on data from POTW receiving iron and steel wastewater
Priority Metals		
Antimony	67%	50-POTW Study - data >2 × ML
Arsenic	66%	50-POTW Study - data >2 × ML
Beryllium	61%	NRMRL Treatability Database (industrial wastewater)
Cadmium	90%	50-POTW Study - data >10 × ML
Chromium	80%	50-POTW Study - data >10 × ML
Copper	84%	50-POTW Study - data >10 × ML
Lead	77%	50-POTW Study - data >10 × ML
Mercury	90%	50-POTW Study - data >10 × ML
Nickel	51%	50-POTW Study - data >10 × ML
Selenium	34%	NRMRL Treatability Database (domestic wastewater)
Silver	88%	50-POTW Study - data >10 × ML
Thallium	54%	NRMRL Treatability Database (all wastewater)
Zinc	79%	50-POTW Study - data >10 × ML

Table 11-3 (Continued)

Pollutant	Percent Removal	Data Source
Nonconventional Metals		
Aluminum	91%	50-POTW Study - data >10 × ML
Barium	55%	50-POTW Study - data >2 × ML
Boron	24%	50-POTW Study - data >2 × ML
Cobalt	10%	50-POTW Study - data >2 × ML
Hexavalent chromium	6%	NRMRL Treatability Database (all wastewater)
Iron	82%	50-POTW Study - data >10 × ML
Magnesium	14%	50-POTW Study - data >10 × ML
Manganese	36%	50-POTW Study - data >10 × ML
Molybdenum	19%	50-POTW Study - data >10 × ML
Tin	43%	50-POTW Study - data >2 × ML
Titanium	92%	50-POTW Study - data >10 × ML
Vanadium	8%	50-POTW Study - data >2 × ML
Priority Organic Pollutants		
Benzene	95%	50-POTW Study - data >10 × ML
Benzo(a)anthracene	98%	NRMRL Treatability Database (domestic wastewater)
Benzo(a)pyrene	95%	NRMRL Treatability Database (all wastewater)
Benzo(b)fluoranthene	95%	NRMRL Treatability Database (all wastewater)
Benzo(k)fluoranthene	95%	NRMRL Treatability Database (all wastewater)
Bis(2-ethylhexyl) phthalate	60%	50-POTW Study - data >10 × ML
Chrysene	97%	NRMRL Treatability Database (domestic wastewater)
2,4-Dimethylphenol	51%	50-POTW Study - data >2 × ML
Fluoranthene	42%	50-POTW Study - data >2 × ML
Naphthalene	95%	50-POTW Study - data >10 × ML
Phenanthrene	95%	50-POTW Study - data >10 × ML
Phenol	95%	50-POTW Study - data >10 × ML
Pyrene	84%	NRMRL Treatability Database (domestic wastewater)
Nonconventional Organic Pollutants		
alpha-Terpineol	94%	NRMRL Treatability Database (industrial wastewater)
Aniline	93%	NRMRL Treatability Database (all wastewater)
Benzyl alcohol	78%	NRMRL Treatability Database (all wastewater)
Carbazole	62%	CWT Project: Generic Removal Group: Anilines
Dibenzofuran	98%	NRMRL Treatability Database (all wastewater)
Hexanoic acid	84%	NRMRL Treatability Database (all wastewater)
2-Methylnaphthalene	28%	NRMRL Treatability Database (industrial wastewater)
n-Dodecane	95%	NRMRL Treatability Database (industrial wastewater)
n-Eicosane	92%	NRMRL Treatability Database (industrial wastewater)

Table 11-3 (Continued)

Pollutant	Percent Removal	Data Source
Nonconventional Organic Pollutants (cont.)		
n-Hexadecane	71%	CWT Project: Generic Removal Group: n-Pariffins
n-Octadecane	71%	CWT Project: Generic Removal Group: n-Pariffins
o-Cresol	53%	NRMRL Treatability Database (industrial wastewater)
o-Toluidine	93%	Transfer from aniline
p-Cresol	72%	NRMRL Treatability Database (industrial wastewater)
2-Phenylnaphthalene	85%	Centralized Water Treaters (CWT) Project - no source listed
2-Propanone	84%	NRMRL Treatability Database (all wastewater)
Pyridine	95%	NRMRL Treatability Database (industrial wastewater)
2,3,7,8-Tetrachlorodibenzofuran	83%	Transfer from 1,2,3,4,6,7,8-HPCDF (Source: NRMRL)
Other Priority Pollutants		
Total cyanide	70%	50-POTW Study - data >10 × ML

(a) Nonconventional pollutants other than nonconventional metals and nonconventional organic pollutants.

Sources: U.S. EPA's Fate of Priority Pollutants in Publicly Owned Treatment Works and U.S. EPA's NRMRL Treatability Database (References 11-1 and 11-2).

Table 11-4

Subcategory-Specific Average Baseline Pollutant Concentrations for the Cokemaking Subcategory By-Product Recovery Cokemaking Segment (a)

Pollutant of Concern	Type of Discharge	Ammonia Stills Subcategory-Specific Average Baseline Concentration (mg/L)	Ammonia Stills and Biological Treatment Subcategory-Specific Average Baseline Concentration (mg/L)
Conventional Pollutants			
Biochemical oxygen demand 5-day (BOD_5) - carbonaceous	Direct	(b)	69.4
	Indirect	1,220	69.4 (c)
Oil and grease (O&G)	Direct	(b)	5.15
	Indirect	21.8	5.15 (c)
Total suspended solids (TSS)	Direct	(b)	52.5
	Indirect	69.8	143
Nonconventional Pollutants, Other (d)			
Ammonia as nitrogen	Direct, Indirect	95.6	52.9
Chemical oxygen demand (COD)	Direct, Indirect	2,414	357
Nitrate/nitrite	Direct, Indirect	0.670	81.2
Thiocyanate	Direct, Indirect	234	6.45
Total Kjeldahl nitrogen (TKN)	Direct, Indirect	190	87.7
Total organic carbon (TOC)	Direct, Indirect	798	27.7
Total phenols	Direct, Indirect	277	2.01
Weak acid dissociable (WAD) cyanide	Direct, Indirect	0.974	2.58
Priority Metals			
Mercury	Direct, Indirect	0.00179	0.000473
Selenium	Direct, Indirect	0.826	0.496
Priority Organic Pollutants			
Benzene	Direct, Indirect	0.0106	0.00512
Benzo(a)anthracene	Direct, Indirect	0.0686	0.0125
Benzo(a)pyrene	Direct, Indirect	0.0683	0.0112
Benzo(b)fluoranthene	Direct, Indirect	0.0610	0.00761
Chrysene	Direct, Indirect	0.0756	0.0123
2,4-Dimethylphenol	Direct, Indirect	1.77	0.00910

Table 11-4 (Continued)

Pollutant of Concern	Type of Discharge	Ammonia Stills Subcategory-Specific Average Baseline Concentration (mg/L)	Ammonia Stills and Biological Treatment Subcategory-Specific Average Baseline Concentration (mg/L)
Priority Organic Pollutants (cont.)			
Fluoranthene	Direct, Indirect	0.0834	0.0150
Naphthalene	Direct, Indirect	0.0504	0.0117
Phenanthrene	Direct, Indirect	0.0553	0.00910
Phenol	Direct, Indirect	131	0.0276
Pyrene	Direct, Indirect	0.0661	0.0139
Nonconventional Organic Pollutants			
Aniline	Direct, Indirect	2.93	0.0102
Dibenzofuran	Direct, Indirect	0.0338	0.0101
2-Methylnaphthalene	Direct, Indirect	0.0336	0.0147
n-Eicosane	Direct, Indirect	0.191	0.0101
n-Octadecane	Direct, Indirect	0.386	0.0101
o-Cresol	Direct, Indirect	12.3	0.0120
p-Cresol	Direct, Indirect	71.4	0.0103
2-Phenylnaphthalene	Direct, Indirect	0.0676	0.0102
2-Propanone	Direct, Indirect	0.0547	0.0506
Pyridine	Direct, Indirect	0.160	0.0103
Other Priority Pollutants			
Total cyanide	Direct, Indirect	2.80	5.58

(a) EPA used these averages for the BAT-1 and PSES-1 options only.
(b) All of the sites that have ammonia still treatment only are indirect dischargers.
(c) For these conventional pollutants, no data were available for indirect sites; therefore, EPA used the average baseline concentration for the direct discharging sites for indirect discharging sites.
(d) Nonconventional pollutants other than nonconventional metals and nonconventional organic pollutants.

Sources: U.S. EPA, U.S. EPA Collection of 1997 Iron and Steel Industry Data (Detailed and Short Surveys), U.S. EPA Analytical and Production Data Follow-Up to the Collection of 1997 Iron and Steel Industry Data (Analytical and Production Survey), and U.S. EPA Iron and Steel Industry Wastewater Sampling Program, 1997-1999.

Table 11-5

Summary of Baseline and Treated Pollutant Loadings and Pollutant Removals for the By-Product Recovery Cokemaking Segment Direct Dischargers

Pollutant of Concern	Baseline Load (lbs/yr)	BAT-1 Treated Load Discharged to Surface Water (lbs/yr)	BAT-3 Treated Load Discharged to Surface Water (lbs/yr)	BAT-1 Pollutant Removals (lbs/yr)	BAT-3 Pollutant Removals (lbs/yr) (a)
Conventional Pollutants					
Biochemical oxygen demand 5-day (BOD_5) - carbonaceous	1,250,000	907,000	735,000	343,000	674,000
Oil and grease (O&G)	90,600	87,600	87,600	2,980	2,980
Total suspended solids (TSS)	593,000	593,000	203,000	0	390,000
Total Conventional Pollutants	**1,930,000**	**1,590,000**	**1,030,000**	**346,000**	**1,070,000**
Nonconventional Pollutants, Other (b)					
Ammonia as nitrogen	453,000	35,700	4,370	417,000	448,000
Chemical oxygen demand (COD)	3,650,000	985,000	853,000	2,670,000	2,800,000
Nitrate/nitrite	1,740,000	1,740,000	1,400,000	0	331,000
Thiocyanate	311,000	10,200	10,200	301,000	301,000
Total Kjeldahl nitrogen (TKN)	1,140,000	491,000	465,000	653,000	680,000
Total organic carbon (TOC)	379,000	260,000	255,000	119,000	124,000
Total phenols	1,720	742	539	979	1,180
Weak acid dissociable (WAD) cyanide	37,400	37,100	35,400	363	363
Total Nonconventional Pollutants, Other (c)	**2,500,000**	**1,790,000**	**1,410,000**	**718,000**	**1,080,000**
Priority Metals					
Mercury	4.71	3.41	3.34	1.31	1.38
Selenium	4,800	3,260	3,170	1,550	1,630
Total Priority Metals	**4,800**	**3,260**	**3,170**	**1,550**	**1,630**
Priority Organic Pollutants					
Benzene	78.7	67.5	70	11.3	11.8
Benzo(a)anthracene	178	156	154	21.4	4.67
Benzo(b)fluoranthene	138	136	135	2.62	3.39
Benzo(a)pyrene	164	135	134	29.3	28.8
Chrysene	176	156	154	20	4.67
2,4-Dimethylphenol	154	151	158	3.42	4.57

Table 11-5 (Continued)

Pollutant of Concern	Baseline Load (lbs/yr)	BAT-1 Treated Load Discharged to Surface Water (lbs/yr)	BAT-3 Treated Load Discharged to Surface Water (lbs/yr)	BAT-1 Pollutant Removals (lbs/yr)	BAT-3 Pollutant Removals (lbs/yr) (a)
Priority Organic Pollutants (cont.)					
Fluoranthene	198	159	156	39.6	4.26
Naphthalene	184	163	144	21.7	47
Phenanthrene	154	151	158	3.42	4.57
Phenol	320	192	158	128	163
Pyrene	190	158	156	31.5	4.26
Total Priority Organic Pollutants	**1,930**	**1,620**	**1,580**	**312**	**281**
Nonconventional Organic Pollutants					
Aniline	164	158	158	5.54	6.1
o-Cresol	180	156	155	23.6	25
p-Cresol	160	154	154	5.15	5.72
Dibenzofuran	162	158	158	4.08	4.57
n-Eicosane	162	158	157	4.36	5.17
2-Methylnaphthalene	216	161	158	54.9	57.2
n-Octadecane	162	158	157	4.36	5.17
2-Phenylnaphthalene	163	159	159	3.77	3.78
2-Propanone	811	787	786	24.2	24.5
Pyridine	165	158	158	6.28	6.86
Total Nonconventional Organic Pollutants	**2,350**	**2,210**	**2,200**	**136**	**144**
Other Priority Pollutants					
Total cyanide	74,400	46,100	19,600	28,300	55,000

(a) BAT-3 pollutant removals were calculated using a previous version of the estimated baseline pollutant loadings. Hence, the listed pollutant removals do not exactly reflect the difference between the baseline pollutant loadings and the BAT-3 treated pollutant loadings. This minor inconsistency has no impact on EPA's decisions for this industry segment for the final rule. See document number IS10831 in Section 14.7 of the rulemaking record for further information.
(b) Nonconventional pollutants other than nonconventional metals and nonconventional organic pollutants.
(c) Total does not include COD, TKN, TOC, total phenols, or WAD cyanide.

Note: Survey weights were applied to the pollutant loadings and removals presented in this table.

Table 11-6

Summary of Baseline and Treated Pollutant Loadings and Pollutant Removals for the By-Product Recovery Cokemaking Segment Indirect Dischargers

Pollutant of Concern	Baseline Load (lbs/yr)	PSES-1 Treated Load Discharged from POTW (lbs/yr)	PSES-3 Treated Load Discharged from POTW (lbs/yr)	PSES-1 Pollutant Removals (lbs/yr)	PSES-3 Pollutant Removals (lbs/yr) (a)
Nonconventional Pollutants, Other (b)					
Ammonia as nitrogen	301,000	106,000	8,050	195,000	293,000
Chemical oxygen demand (COD)	1,440,000	998,000	64,600	443,000	1,380,000
Nitrate/nitrite	15,600	15,600	15,600	28.1	28.1
Thiocyanate	193,000	172,000	1,410	20,900	191,000
Total Kjeldahl nitrogen (TKN)	73,600	65,600	13,900	8,040	59,700
Total organic carbon (TOC)	732,000	598,000	23,600	134,000	709,000
Total phenols	204,000	166,000	34.7	38,600	204,000
Weak acid dissociable (WAD) cyanide	411	383	383	28	28
Total Nonconventional Pollutants, Other (c)	**510,000**	**294,000**	**25,100**	**216,000**	**484,000**
Priority Metals					
Mercury	0.618	0.484	0.112	0.134	0.506
Selenium	2,400	2,170	908	228	1,490
Total Priority Metals	**2,400**	**2,170**	**908**	**228**	**1,490**
Priority Organic Pollutants					
Benzene	2.01	1.4	1.14	0.605	0.897
Benzo(a)anthracene	4.58	3.86	0.894	0.718	3.6
Benzo(b)fluoranthene	9.85	7.84	2.01	2.01	7.84
Benzo(a)pyrene	11.3	6.96	2.24	4.33	9.04
Chrysene	7.49	6.1	1.34	1.39	6.02
2,4-Dimethylphenol	2,600	1,390	22	1,210	2,580
Fluoranthene	161	82.7	26	78.6	130
Naphthalene	8.01	4.08	2.25	3.93	5.81
Phenanthrene	9.14	5.74	2.24	3.39	6.99
Phenol	15,200	15,200	2.24	0	15,200
Pyrene	35.9	20.7	7.18	15.2	27.5
Total Priority Organic Pollutants	**18,000**	**16,700**	**69.5**	**1,320**	**18,000**

Table 11-6 (Continued)

Pollutant of Concern	Baseline Load (lbs/yr)	PSES-1 Treated Load Discharged from POTW (lbs/yr)	PSES-3 Treated Load Discharged from POTW (lbs/yr)	PSES-1 Pollutant Removals (lbs/yr)	PSES-3 Pollutant Removals (lbs/yr) (a)
Nonconventional Organic Pollutants					
Aniline	615	492	3.14	123	612
o-Cresol	17,300	14,900	21.1	2,420	17,300
p-Cresol	59,800	18,900	12.6	41,000	59,800
Dibenzofuran	2.41	1.93	0.898	0.477	1.51
n-Eicosane	47.3	36	3.58	11.2	43.7
2-Methylnaphthalene	92.5	48.5	32.4	44	60.1
n-Octadecane	341	114	13	226	328
2-Phenylnaphthalene	33.2	29	6.82	4.25	26.4
2-Propanone	41.6	36.4	35.8	5.16	5.79
Pyridine	24.9	11	2.24	13.9	22.7
Total Nonconventional Organic Pollutants	**78,300**	**34,600**	**132**	**43,800**	**78,200**
Other Priority Pollutants					
Total cyanide	8,130	5,290	3,280	2,840	4,860

(a) PSES-3 pollutant removals were calculated using a previous version of the estimated baseline pollutant loadings. Hence, the listed pollutant removals do not exactly reflect the difference between the baseline pollutant loadings and the PSES-3 treated pollutant loadings. This minor inconsistency has no impact on EPA's decisions for this industry segment for the final rule. See document number IS10831 in Section 14.7 of the rulemaking record for further information.
(b) Nonconventional pollutants other than nonconventional metals and nonconventional organic pollutants.
(c) Total does not include COD, TKN, TOC, total phenols, or WAD cyanide.

Note: Survey weights and POTW percent removals were applied to the pollutant loadings and removals presented in this table (i.e., represents what is discharged to the receiving stream).

Table 11-7

Subcategory-Specific Average Baseline Pollutant Concentrations for the Ironmaking Subcategory Blast Furnace Wastewater Only

Pollutant of Concern	Type of Discharge	Subcategory-Specific Average Baseline Concentration (mg/L)
Conventional Pollutants		
Oil and grease (O&G)	Direct	5.54
	Indirect	5.54 (a)
Total suspended solids (TSS)	Direct	34.8
	Indirect	34.8 (a)
Nonconventional Pollutants, Other (b)		
Amenable cyanide	Direct, Indirect	0.105
Ammonia as nitrogen	Direct, Indirect	60.1
Chemical oxygen demand (COD)	Direct, Indirect	274
Fluoride	Direct, Indirect	9.89
Nitrate/nitrite	Direct, Indirect	2.45
Thiocyanate	Direct, Indirect	0.148
Total Kjeldahl nitrogen (TKN)	Direct, Indirect	112
Total organic carbon (TOC)	Direct, Indirect	12.6
Weak acid dissociable (WAD) cyanide	Direct, Indirect	0.0150
Priority Metals		
Chromium	Direct, Indirect	0.00691
Copper	Direct, Indirect	0.00654
Lead	Direct, Indirect	0.0541
Nickel	Direct, Indirect	0.0214
Selenium	Direct, Indirect	0.003
Zinc	Direct, Indirect	0.779
Nonconventional Metals		
Aluminum	Direct, Indirect	0.171
Boron	Direct, Indirect	1.21
Iron	Direct, Indirect	4.29
Magnesium	Direct, Indirect	59.5
Manganese	Direct, Indirect	1.76
Molybdenum	Direct, Indirect	0.0408
Titanium	Direct, Indirect	0.00380

Table 11-7 (Continued)

Pollutant of Concern	Type of Discharge	Subcategory-Specific Average Baseline Concentration (mg/L)
Other Priority Pollutants		
Total cyanide	Direct, Indirect	0.606

(a) The indirect discharger did not provide data for these conventional POCs; therefore, EPA used the average baseline concentrations for the direct dischargers.
(b) Nonconventional pollutants other than nonconventional metals and nonconventional organic pollutants.

Sources: U.S. EPA, U.S. EPA Collection of 1997 Iron and Steel Industry Data (Detailed and Short Surveys), U.S. EPA Analytical and Production Data Follow-Up to the Collection of 1997 Iron and Steel Industry Data (Analytical and Production Survey), and U.S. EPA Iron and Steel Industry Wastewater Sampling Program, 1997-1999.

Table 11-8

Subcategory-Specific Average Baseline Pollutant Concentrations for the Ironmaking Subcategory Commingled Blast Furnace and Sintering Wastewater

Pollutant of Concern	Type of Discharge (a)	Subcategory-Specific Average Baseline Concentration (mg/L)
Conventional Pollutants		
Oil and grease (O&G)	Direct	5.88
Total suspended solids (TSS)	Direct	28.7
Nonconventional Pollutants, Other (b)		
Amenable cyanide	Direct	0.0240
Ammonia as nitrogen	Direct	58.8
Chemical oxygen demand (COD)	Direct	42.6
Fluoride	Direct	14.1
Nitrate/nitrite	Direct	7.29
Thiocyanate	Direct	0.116
Total Kjeldahl nitrogen (TKN)	Direct	51.6
Total organic carbon (TOC)	Direct	12.9
Total phenols	Direct	0.0431
Weak acid dissociable (WAD) cyanide	Direct	0.0179
Priority Metals		
Arsenic	Direct	0.00460
Cadmium	Direct	0.00627
Chromium	Direct	0.0151
Copper	Direct	0.00798
Lead	Direct	0.0374
Mercury	Direct	0.000221
Nickel	Direct	0.0159
Selenium	Direct	0.00701
Thallium	Direct	0.0577
Zinc	Direct	0.611
Nonconventional Metals		
Aluminum	Direct	0.586
Boron	Direct	0.363
Iron	Direct	2.62
Magnesium	Direct	27.1

Table 11-8 (Continued)

Pollutant of Concern	Type of Discharge (a)	Subcategory-Specific Average Baseline Concentration (mg/L)
Nonconventional Metals (cont.)		
Manganese	Direct	0.307
Molybdenum	Direct	0.0381
Titanium	Direct	0.00160
Priority Organic Pollutants		
2,4-Dimethylphenol	Direct	0.0100
Fluoranthene	Direct	0.0100
4-Nitrophenol	Direct	0.0500
Phenanthrene	Direct	0.0100
Phenol	Direct	0.0100
Nonconventional Organic Pollutants		
1,2,3,4,6,7,8-Heptachlorodibenzofuran	Direct	1.24E-07
1,2,3,4,7,8-Hexachlorodibenzofuran	Direct	9.40E-08
1,2,3,6,7,8-Hexachlorodibenzofuran	Direct	8.24E-08
2,3,4,6,7,8-Hexachlorodibenzofuran	Direct	6.80E-08
o-Cresol	Direct	0.0100
p-Cresol	Direct	0.0100
1,2,3,7,8-Pentachlorodibenzofuran	Direct	9.16E-08
2,3,4,7,8-Pentachlorodibenzofuran	Direct	1.27E-07
Pyridine	Direct	0.0215
2,3,7,8-Tetrachlorodibenzofuran	Direct	8.13E-08
Other Priority Pollutants		
Total cyanide	Direct	0.0696

(a) Sites with commingled blast furnace and sintering wastewater included only direct dischargers; therefore, EPA did not calculate average baseline pollutant concentrations for indirect dischargers.
(b) Nonconventional pollutants other than nonconventional metals and nonconventional organic pollutants.

Sources: U.S. EPA, U.S. EPA Collection of 1997 Iron and Steel Industry Data (Detailed and Short Surveys), U.S. EPA Analytical and Production Data Follow-Up to the Collection of 1997 Iron and Steel Industry Data (Analytical and Production Survey), and U.S. EPA Iron and Steel Industry Wastewater Sampling Program, 1997-1999.

Note: For sites with commingled blast furnace and sintering wastewater, EPA combined the POCs for the blast furnace and sintering segments.

Table 11-9

Arithmetic Means of BAT Performance Data for the Ironmaking Subcategory Blast Furnace Wastewater Only

Pollutant of Concern	Option	Arithmetic Mean of BAT Performance Data (mg/L)
Conventional Pollutants		
Oil and grease (O&G)	BAT-1	5.88 (a)
	PSES-1	5.88 (a)
Total suspended solids (TSS)	BAT-1	18.7
	PSES-1	18.7
Nonconventional Pollutants, Other (b)		
Amenable cyanide	BAT-1	0.0244
	PSES-1	0.0244
Ammonia as nitrogen	BAT-1	0.280 (a)
	PSES-1	72.5 (a)
Chemical oxygen demand (COD)	BAT-1	42.9
	PSES-1	42.9
Fluoride	BAT-1	14.0
	PSES-1	14.0
Nitrate/nitrite	BAT-1	7.31
	PSES-1	7.31
Thiocyanate	BAT-1	0.118
	PSES-1	0.118
Total Kjeldahl nitrogen (TKN)	BAT-1	65.7
	PSES-1	65.7
Total organic carbon (TOC)	BAT-1	13.2
	PSES-1	13.2
Weak acid dissociable (WAD) cyanide	BAT-1	0.0171
	PSES-1	0.0171
Priority Metals		
Chromium	BAT-1	0.0149
	PSES-1	0.0149
Copper	BAT-1	0.00840
	PSES-1	0.00840
Lead	BAT-1	0.00338
	PSES-1	0.0169

Table 11-9 (Continued)

Pollutant of Concern	Option	Arithmetic Mean of BAT Performance Data (mg/L)
Priority Metals (cont.)		
Nickel	BAT-1	0.0160
	PSES-1	0.0160
Selenium	BAT-1	0.00750
	PSES-1	0.00750
Zinc	BAT-1	0.0368 (a)
	PSES-1	0.843 (a)
Nonconventional Metals		
Aluminum	BAT-1	0.586
	PSES-1	0.586
Boron	BAT-1	0.365
	PSES-1	0.365
Iron	BAT-1	2.58
	PSES-1	2.58
Magnesium	BAT-1	27.1
	PSES-1	27.1
Manganese	BAT-1	0.308
	PSES-1	0.308
Molybdenum	BAT-1	0.0386
	PSES-1	0.0386
Titanium	BAT-1	0.00160
	PSES-1	0.00160
Other Priority Pollutants		
Total cyanide	BAT-1	1.45 (a)
	PSES-1	0.0725

(a) EPA's statisticians calculated this LTA at proposal. The statisticians calculated the LTAs for regulated pollutants only.
(b) Nonconventional pollutants other than nonconventional metals and nonconventional organic pollutants.

Sources: U.S. EPA, U.S. EPA Collection of 1997 Iron and Steel Industry Data (Detailed and Short Surveys), U.S. EPA Analytical and Production Data Follow-Up to the Collection of 1997 Iron and Steel Industry Data (Analytical and Production Survey), and U.S. EPA Iron and Steel Industry Wastewater Sampling Program, 1997-1999.

Table 11-10

Arithmetic Means of BAT Performance Data for the Ironmaking Subcategory Commingled Blast Furnace and Sintering Wastewater

Pollutant of Concern	Option	Arithmetic Mean of BAT Performance Data (mg/L)
Conventional Pollutants		
Hexane extractable material (HEM)	BAT-1	5.88 (a)
	PSES-1	5.88 (a)
Total suspended solids (TSS)	BAT-1	18.7
	PSES-1	18.7
Nonconventional Pollutants, Other (b)		
Amenable cyanide	BAT-1	0.0244
	PSES-1	0.0244
Ammonia as nitrogen	BAT-1	0.280 (a)
	PSES-1	72.5 (a)
Chemical oxygen demand (COD)	BAT-1	42.9
	PSES-1	42.9
Fluoride	BAT-1	14.0
	PSES-1	14.0
Nitrate/nitrite	BAT-1	7.31
	PSES-1	7.31
Thiocyanate	BAT-1	0.118
	PSES-1	0.118
Total Kjeldahl nitrogen (TKN)	BAT-1	65.7
	PSES-1	65.7
Total organic carbon (TOC)	BAT-1	13.2
	PSES-1	13.2
Total phenols	BAT-1	0.0100 (a)
	PSES-1	0.0100
Weak acid dissociable (WAD) cyanide	BAT-1	0.0171
	PSES-1	0.0171
Priority Metals		
Arsenic	BAT-1	0.00460
	PSES-1	0.00460
Cadmium	BAT-1	0.00636
	PSES-1	0.00636
Chromium	BAT-1	0.0149
	PSES-1	0.0149

Table 11-10 (Continued)

Pollutant of Concern	Option	Arithmetic Mean of BAT Performance Data (mg/L)
Priority Metals (cont.)		
Copper	BAT-1	0.00840
	PSES-1	0.00840
Lead	BAT-1	0.00338
	PSES-1	0.0169
Mercury	BAT-1	0.000223
	PSES-1	0.000223
Nickel	BAT-1	0.0160
	PSES-1	0.0160
Selenium	BAT-1	0.00750
	PSES-1	0.00750
Thallium	BAT-1	0.0578
	PSES-1	0.0578
Zinc	BAT-1	0.0368 (a)
	PSES-1	0.843 (a)
Nonconventional Metals		
Aluminum	BAT-1	0.586
	PSES-1	0.586
Boron	BAT-1	0.365
	PSES-1	0.365
Iron	BAT-1	2.58
	PSES-1	2.58
Magnesium	BAT-1	27.1
	PSES-1	27.1
Manganese	BAT-1	0.308
	PSES-1	0.308
Molybdenum	BAT-1	0.0386
	PSES-1	0.0386
Titanium	BAT-1	0.00160
	PSES-1	0.00160
Priority Organic Pollutants		
Fluoranthene	BAT-1	0.0100
	PSES-1	0.0100
Phenanthrene	BAT-1	0.0100
	PSES-1	0.0100
Phenol	BAT-1	0.0100
	PSES-1	0.0100

Table 11-10 (Continued)

Pollutant of Concern	Option	Arithmetic Mean of BAT Performance Data (mg/L)
Priority Organic Pollutants (cont.)		
2,4-Dimethylphenol	BAT-1	0.0100
	PSES-1	0.0100
4-Nitrophenol	BAT-1	0.0500
	PSES-1	0.0500
Nonconventional Organic Pollutants		
o-Cresol	BAT-1	0.0100
	PSES-1	0.0100
p-Cresol	BAT-1	0.0100
	PSES-1	0.0100
Pyridine	BAT-1	0.0193
	PSES-1	0.0193
1,2,3,4,6,7,8-Heptachlorodibenzofuran	BAT-1	5.0E-08
	PSES-1	5.0E-08
1,2,3,4,7,8-Hexachlorodibenzofuran	BAT-1	5.0E-08
	PSES-1	5.0E-08
1,2,3,6,7,8-Hexachlorodibenzofuran	BAT-1	5.0E-08
	PSES-1	5.0E-08
2,3,4,6,7,8-Hexachlorodibenzofuran	BAT-1	5.0E-08
	PSES-1	5.0E-08
1,2,3,7,8-Pentachlorodibenzofuran	BAT-1	5.0E-08
	PSES-1	5.0E-08
2,3,4,7,8-Pentachlorodibenzofuran	BAT-1	5.0E-08
	PSES-1	5.0E-08
2,3,7,8-Tetrachlorodibenzofuran	BAT-1	1.0E-08 (a)
	PSES-1	1.0E-08 (a)
Other Priority Pollutants		
Total cyanide	BAT-1	1.45 (a)
	PSES-1	0.0725

(a) EPA's statisticians calculated this LTA at proposal. The statisticians calculated the LTAs for regulated pollutants only.
(b) Nonconventional pollutants other than nonconventional metals and nonconventional organic pollutants.

Sources: U.S. EPA, U.S. EPA Collection of 1997 Iron and Steel Industry Data (Detailed and Short Surveys), U.S. EPA Analytical and Production Data Follow-Up to the Collection of 1997 Iron and Steel Industry Data (Analytical and Production Survey), and U.S. EPA Iron and Steel Industry Wastewater Sampling Program, 1997-1999.

Table 11-11

Summary of Baseline and Treated Pollutant Loadings and Pollutant Removals for the Ironmaking Subcategory Direct Dischargers

Pollutant of Concern	Baseline Load (lbs/yr)	BAT-1 Treated Load Discharged to Surface Water (lbs/yr)	BAT-1 Pollutant Removals (lbs/yr)
Conventional Pollutants			
Oil and grease (O&G)	452,000	63,600	389,000
Total suspended solids (TSS)	2,380,000	153,000	2,230,000
Total Conventional Pollutants	**2,830,000**	**217,000**	**2,620,000**
Nonconventional Pollutants, Other (a)			
Amenable cyanide	6,130	263	5,870
Ammonia as nitrogen	4,770,000	3,090	4,760,000
Chemical oxygen demand (COD)	15,300,000	471,000	14,800,000
Fluoride	912,000	140,000	773,000
Nitrate/nitrite	333,000	62,100	270,000
Thiocyanate	10,900	1,290	9,650
Total Kjeldahl nitrogen (TKN)	7,230,000	618,000	6,610,000
Total organic carbon (TOC)	1,020,000	141,000	875,000
Total phenols	1,250	74.5	1,180
Weak acid dissociable (WAD) cyanide	1,280	180	1,100
Total Nonconventional Pollutants, Other (b)	**6,030,000**	**206,000**	**5,810,000**
Priority Metals			
Arsenic	135	34.3	101
Cadmium	185	46.7	138
Chromium	783	133	649
Copper	580	83	497
Lead	3,970	37.3	3,930
Mercury	6.34	1.65	4.7
Nickel	1,550	172	1,380
Selenium	367	63.1	304
Thallium	1,790	430	1,360
Zinc	55,600	404	55,200
Total Priority Metals	**65,000**	**1,410**	**63,600**

Table 11-11 (Continued)

Pollutant of Concern	Baseline Load (lbs/yr)	BAT-1 Treated Load Discharged to Surface Water (lbs/yr)	BAT-1 Pollutant Removals (lbs/yr)
Nonconventional Metals			
Aluminum	25,600	4,980	20,600
Boron	72,800	4,010	68,800
Iron	295,000	28,200	267,000
Magnesium	3,840,000	299,000	3,540,000
Manganese	100,000	3,390	96,900
Molybdenum	3,170	414	2,760
Titanium	245	17.6	227
Total Nonconventional Metals	**4,340,000**	**340,000**	**4,000,000**
Priority Organic Pollutants			
2,4-Dimethylphenol	289	74.5	215
Fluoranthene	286	74.5	211
4-Nitrophenol	1,490	373	1,120
Phenanthrene	287	74.5	212
Phenol	289	74.5	215
Total Priority Organic Pollutants	**2,640**	**671**	**1,970**
Nonconventional Organic Pollutants			
2,3,7,8-Tetrachlorodibenzofuran	0.000616	0.0000745	0.000542
1,2,3,7,8-Pentachlorodibenzofuran	0.00157	0.000373	0.0012
2,3,4,7,8-Pentachlorodibenzofuran	0.0017	0.000373	0.00133
1,2,3,4,7,8-Hexachlorodibenzofuran	0.00158	0.000373	0.00121
1,2,3,6,7,8-Hexachlorodibenzofuran	0.00154	0.000373	0.00117
2,3,4,6,7,8-Hexachlorodibenzofuran	0.00149	0.000373	0.00112
1,2,3,4,6,7,8-Heptachlorodibenzofuran	0.00169	0.000373	0.00132
o-Cresol	285	74.5	211
p-Cresol	286	74.5	212
Pyridine	646	144	502
Total Nonconventional Organic Pollutants	**1,220**	**293**	**925**
Other Priority Pollutants			
Total cyanide	38,000	2,960	35,000

(a) Nonconventional pollutants other than nonconventional metals and nonconventional organic pollutants.
(b) Total does not include amenable cyanide, COD, TKN, TOC, total phenols, or WAD cyanide.

Note: Survey weights were applied to the pollutant loadings and removals presented in this table.

Table 11-12

Summary of Baseline and Treated Pollutant Loadings and Pollutant Removals for the Ironmaking Subcategory Indirect Dischargers

Pollutant of Concern	Baseline Load (lbs/yr)	PSES-1 Treated Load Discharged from POTW (lbs/yr)	PSES-1 Pollutant Removals (lbs/yr)
Nonconventional Pollutants, Other (a)			
Amenable cyanide	4.86	0.344	4.52
Ammonia as nitrogen	14,400	4,390	10,000
Chemical oxygen demand (COD)	34,400	1,640	32,800
Fluoride	3,010	917	2,090
Nitrate/nitrite	162	49.4	113
Thiocyanate	29.4	7.14	22.2
Total Kjeldahl nitrogen (TKN)	7,410	1,320	6,080
Total organic carbon (TOC)	2,500	762	1,740
Weak acid dissociable (WAD) cyanide	0.694	0.212	0.483
Total Nonconventional Pollutants, Other (b)	**17,600**	**5,360**	**12,200**
Priority Metals			
Chromium	0.914	0.279	0.635
Copper	0.692	0.211	0.481
Lead	15.2	0.784	14.4
Nickel	6.93	1.58	5.35
Selenium	1.31	0.399	0.91
Zinc	11.1	3.39	7.72
Total Priority Metals	**36.1**	**6.64**	**29.5**
Nonconventional Metals			
Aluminum	10.2	3.1	7.07
Boron	608	55.9	552
Iron	511	93.6	417
Magnesium	33,800	4,700	29,100
Manganese	745	39.7	705
Molybdenum	21.9	6.3	15.6
Titanium	0.201	0.0258	0.175
Total Nonconventional Metals	**35,700**	**4,900**	**30,800**

Table 11-12 (Continued)

Pollutant of Concern	Baseline Load (lbs/yr)	PSES-1 Treated Load Discharged from POTW (lbs/yr)	PSES-1 Pollutant Removals (lbs/yr)
Other Priority Pollutants			
Total cyanide	51.6	4.38	47.2

(a) Nonconventional pollutants other than nonconventional metals and nonconventional organic pollutants.
(b) Total does not include amenable cyanide, COD, TKN, TOC, or WAD cyanide.

Note: Survey weights and POTW percent removals were applied to the pollutant loadings and removals presented in this table (i.e., represents what is discharged to the receiving stream).

Table 11-13

Subcategory-Specific Average Baseline Pollutant Concentrations for the Sintering Subcategory Commingled Blast Furnace and Sintering Wastewater

Pollutant of Concern	Type of Discharge (a)	Subcategory-Specific Average Baseline Concentration (mg/L)
Conventional Pollutants		
Oil and grease (O&G)	Direct	5.88
Total suspended solids (TSS)	Direct	28.7
Nonconventional Pollutants, Other (b)		
Amenable cyanide	Direct	0.0240
Ammonia as nitrogen	Direct	58.8
Chemical oxygen demand (COD)	Direct	42.6
Fluoride	Direct	14.1
Nitrate/nitrite	Direct	7.29
Thiocyanate	Direct	0.116
Total Kjeldahl nitrogen (TKN)	Direct	51.6
Total organic carbon (TOC)	Direct	12.9
Total phenols	Direct	0.0431
Weak acid dissociable (WAD) cyanide	Direct	0.0179
Priority Metals		
Arsenic	Direct	0.00460
Cadmium	Direct	0.00627
Chromium	Direct	0.0151
Copper	Direct	0.00798
Lead	Direct	0.0374
Mercury	Direct	0.000221
Nickel	Direct	0.0159
Selenium	Direct	0.00701
Thallium	Direct	0.0577
Zinc	Direct	0.611
Nonconventional Metals		
Aluminum	Direct	0.586
Boron	Direct	0.363
Iron	Direct	2.62
Magnesium	Direct	27.1
Manganese	Direct	0.307

Table 11-13 (Continued)

Pollutant of Concern	Type of Discharge (a)	Subcategory-Specific Average Baseline Concentration (mg/L)
Nonconventional Metals (cont.)		
Molybdenum	Direct	0.0381
Titanium	Direct	0.00160
Priority Organic Pollutants		
2,4-Dimethylphenol	Direct	0.0100
Fluoranthene	Direct	0.0100
4-Nitrophenol	Direct	0.0500
Phenanthrene	Direct	0.0100
Phenol	Direct	0.0100
Nonconventional Organic Pollutants		
1,2,3,4,6,7,8-Heptachlorodibenzofuran	Direct	1.24E-07
1,2,3,4,7,8-Hexachlorodibenzofuran	Direct	9.40E-08
1,2,3,6,7,8-Hexachlorodibenzofuran	Direct	8.24E-08
2,3,4,6,7,8-Hexachlorodibenzofuran	Direct	6.80E-08
o-Cresol	Direct	0.0100
p-Cresol	Direct	0.0100
1,2,3,7,8-Pentachlorodibenzofuran	Direct	9.16E-08
2,3,4,7,8-Pentachlorodibenzofuran	Direct	1.27E-07
Pyridine	Direct	0.0215
2,3,7,8-Tetrachlorodibenzofuran	Direct	8.13E-08
Other Priority Pollutants		
Total cyanide	Direct	0.0696

(a) Sites with commingled blast furnace and sintering wastewater included only direct dischargers; therefore, EPA did not calculate average baseline pollutant concentrations for indirect dischargers.
(b) Nonconventional pollutants other than nonconventional metals and nonconventional organic pollutants.

Note: For sites with commingled blast furnace and sintering wastewater, EPA combined the POCs for the blast furnace and sintering segments.

Sources: U.S. EPA, U.S. EPA Collection of 1997 Iron and Steel Industry Data (Detailed and Short Surveys), U.S. EPA Analytical and Production Data Follow-Up to the Collection of 1997 Iron and Steel Industry Data (Analytical and Production Survey), and U.S. EPA Iron and Steel Industry Wastewater Sampling Program, 1997-1999.

Table 11-14

Minimum Levels Used as Treated Effluent Concentrations for the Sintering Subcategory (a)

Pollutant of Concern	Option	Minimum Level (mg/L)
Nonconventional Organic Pollutants		
1,2,3,4,6,7,8-Heptachlorodibenzofuran	BAT-1	5E-08
1,2,3,4,7,8-Hexachlorodibenzofuran	BAT-1	5E-08
1,2,3,6,7,8-Hexachlorodibenzofuran	BAT-1	5E-08
2,3,4,6,7,8-Hexachlorodibenzofuran	BAT-1	5E-08
1,2,3,7,8-Pentachlorodibenzofuran	BAT-1	5E-08
2,3,4,7,8-Pentachlorodibenzofuran	BAT-1	5E-08
2,3,7,8-Tetrachlorodibenzofuran	BAT-1	1E-08

(a) EPA calculated pollutant removals for only dioxins and furans for the sintering subcategory; therefore, for all other POCs, the treated effluent concentration was set equal to the baseline effluent concentration and LTAs were not needed for this calculation.

Sources: U.S. EPA, U.S. EPA Collection of 1997 Iron and Steel Industry Data (Detailed and Short Surveys), U.S. EPA Analytical and Production Data Follow-Up to the Collection of 1997 Iron and Steel Industry Data (Analytical and Production Survey), and U.S. EPA Iron and Steel Industry Wastewater Sampling Program, 1997-1999.

Table 11-15

Summary of Baseline and Treated Pollutant Loadings and Pollutant Removals for the Sintering Subcategory Direct Dischargers

Pollutant of Concern	Baseline Load (lbs/yr)	BAT-1 Treated Load Discharged to Surface Water (lbs/yr)	BAT-1 Pollutant Removals (lbs/yr)
Conventional Pollutants			
Oil and grease (O&G)	167,000	167,000	0
Total suspended solids (TSS)	456,000	456,000	0
Total Conventional Pollutants	**623,000**	**623,000**	**0**
Nonconventional Pollutants, Other (a)			
Amenable cyanide	685	685	0
Ammonia as nitrogen	1,720,000	1,720,000	0
Chemical oxygen demand (COD)	1,220,000	1,220,000	0
Fluoride	404,000	404,000	0
Nitrate/nitrite	206,000	206,000	0
Thiocyanate	3,320	3,320	0
Total Kjeldahl nitrogen (TKN)	1,470,000	1,470,000	0
Total organic carbon (TOC)	368,000	368,000	0
Total phenols	1,250	1,250	0
Weak acid dissociable (WAD) cyanide	510	510	0
Total Nonconventional Pollutants, Other (b)	**2,330,000**	**2,330,000**	**0**
Priority Metals			
Arsenic	135	135	0
Cadmium	185	185	0
Chromium	427	427	0
Copper	243	243	0
Lead	1,090	1,090	0
Mercury	6.34	6.34	0
Nickel	449	449	0
Selenium	213	213	0
Thallium	1,790	1,790	0
Zinc	18,300	18,300	0
Total Priority Metals	**22,800**	**22,800**	**0**
Nonconventional Metals			
Aluminum	16,800	16,800	0
Boron	10,600	10,600	0
Iron	74,300	74,300	0

Table 11-15 (Continued)

Pollutant of Concern	Baseline Load (lbs/yr)	BAT-1 Treated Load Discharged to Surface Water (lbs/yr)	BAT-1 Pollutant Removals (lbs/yr)
Nonconventional Metals (cont.)			
Magnesium	775,000	775,000	0
Manganese	9,730	9,730	0
Molybdenum	1,080	1,080	0
Titanium	49.1	49.1	0
Total Nonconventional Metals	**888,000**	**888,000**	**0**
Priority Organic Pollutants			
2,4-Dimethylphenol	289	289	0
Fluoranthene	286	286	0
4-Nitrophenol	1,490	1,490	0
Phenanthrene	287	287	0
Phenol	289	289	0
Total Priority Organic Pollutants	**2,640**	**2,640**	**0**
Nonconventional Organic Pollutants			
2,3,7,8-Tetrachlorodibenzofuran	0.000616	0.000285	0.000332
1,2,3,7,8-Pentachlorodibenzofuran	0.00157	0.00142	0.000152
2,3,4,7,8-Pentachlorodibenzofuran	0.0017	0.00142	0.000281
1,2,3,4,7,8-Hexachlorodibenzofuran	0.00158	0.00142	0.000161
1,2,3,6,7,8-Hexachlorodibenzofuran	0.00154	0.00142	0.000118
2,3,4,6,7,8-Hexachlorodibenzofuran	0.00149	0.00142	0.0000658
1,2,3,4,6,7,8-Heptachlorodibenzofuran	0.00169	0.00142	0.000272
o-Cresol	285	285	0
p-Cresol	286	286	0
Pyridine	646	646	0
Total Nonconventional Organic Pollutants	**1,220**	**1,220**	**0.00138**
Other Priority Pollutants			
Total cyanide	1,940	1,940	0

(a) Nonconventional pollutants other than nonconventional metals and nonconventional organic pollutants.
(b) Total does not include amenable cyanide, COD, TKN, TOC, total phenols, or WAD cyanide.

Note: Survey weights were applied to the pollutant loadings and removals presented in this table.

Table 11-16

Subcategory-Specific Average Baseline Pollutant Concentrations for the Integrated Steelmaking Subcategory

Pollutant of Concern	Type of Discharge	Subcategory-Specific Average Baseline Concentration (mg/L)
Conventional Pollutants		
Total suspended solids (TSS)	Direct	15.8
Nonconventional Pollutants, Other (a)		
Ammonia as nitrogen	Direct	0.375
Chemical oxygen demand (COD)	Direct	31.3
Fluoride	Direct	38.7
Nitrate/nitrite	Direct	1.04
Total organic carbon (TOC)	Direct	8.89
Priority Metals		
Cadmium	Direct	0.00493
Chromium	Direct	0.0102
Copper	Direct	0.0173
Lead	Direct	0.0694
Zinc	Direct	0.802
Nonconventional Metals		
Aluminum	Direct	1.07
Iron	Direct	4.41
Magnesium	Direct	21.6
Manganese	Direct	0.288
Molybdenum	Direct	0.387
Vanadium	Direct	0.0134
Tin	Direct	0.00746
Titanium	Direct	0.00716

(a) Nonconventional pollutants other than nonconventional metals and nonconventional organic pollutants.

Sources: U.S. EPA, U.S. EPA Collection of 1997 Iron and Steel Industry Data (Detailed and Short Surveys), U.S. EPA Analytical and Production Data Follow-Up to the Collection of 1997 Iron and Steel Industry Data (Analytical and Production Survey), and U.S. EPA Iron and Steel Industry Wastewater Sampling Program, 1997-1999.

Table 11-17

Arithmetic Means of BAT Performance Data for the Integrated Steelmaking Subcategory

Pollutant of Concern	Option	Arithmetic Mean of BAT Performance Data (mg/L)
Conventional Pollutants		
Total suspended solids (TSS)	BAT-1	7.49
Nonconventional Pollutants, Other (a)		
Ammonia as nitrogen	BAT-1	0.142
Chemical oxygen demand (COD)	BAT-1	21.2
Fluoride	BAT-1	15.5
Nitrate/nitrite	BAT-1	1.95
Total organic carbon (TOC)	BAT-1	9.14
Priority Metals		
Cadmium	BAT-1	0.00100
Chromium	BAT-1	0.0101
Copper	BAT-1	0.0100
Lead	BAT-1	0.0141
Zinc	BAT-1	0.121
Nonconventional Metals		
Aluminum	BAT-1	0.228
Iron	BAT-1	1.17
Magnesium	BAT-1	56.5
Manganese	BAT-1	0.0673
Molybdenum	BAT-1	0.656
Tin	BAT-1	0.00390
Titanium	BAT-1	0.00605
Vanadium	BAT-1	0.0145

(a) Nonconventional pollutants other than nonconventional metals and nonconventional organic pollutants.

Table 11-18

Summary of Baseline and Treated Pollutant Loadings and Pollutant Removals for the Integrated Steelmaking Subcategory Direct Dischargers

Pollutant of Concern	Baseline Load (lbs/yr)	BAT-1 Treated Load Discharged to Surface Water (lbs/yr)	BAT-1 Pollutant Removals (lbs/yr)
Conventional Pollutants			
Total suspended solids (TSS)	1,120,000	225,000	892,000
Nonconventional Pollutants, Other (a)			
Ammonia as nitrogen	24,000	5,940	18,100
Chemical oxygen demand (COD)	2,670,000	714,000	1,960,000
Fluoride	2,720,000	591,000	2,130,000
Nitrate/nitrite	104,000	104,000	0
Total organic carbon (TOC)	716,000	246,000	470,000
Total Nonconventional Pollutants, Other (b)	**2,850,000**	**701,000**	**2,150,000**
Priority Metals			
Cadmium	249	37	211
Chromium	813	277	536
Copper	1,120	289	831
Lead	3,640	416	3,230
Zinc	41,200	3,330	37,900
Total Priority Metals	**47,000**	**4,350**	**42,700**
Nonconventional Metals			
Aluminum	62,800	9,800	53,000
Iron	279,000	38,700	240,000
Magnesium	2,550,000	725,000	1,830,000
Manganese	16,000	2,330	13,600
Molybdenum	33,200	11,000	22,300
Tin	523	144	379
Titanium	571	175	396
Vanadium	1,130	404	731
Total Nonconventional Metals	**2,940,000**	**788,000**	**2,160,000**

(a) Nonconventional pollutants other than nonconventional metals and nonconventional organic pollutants.
(b) Total does not include COD or TOC.

Note: Survey weights were applied to the pollutant loadings and removals presented in this table.

Table 11-19

Subcategory-Specific Average Baseline Pollutant Concentrations for the Integrated and Stand-Alone Hot Forming Subcategory Carbon and Alloy Steel Segment

Pollutant of Concern	Type of Discharge	Subcategory-Specific Average Baseline Concentration (mg/L)
Conventional Pollutants		
Oil and grease (O&G)	Direct	6.98
	Indirect	6.98 (a)
Total suspended solids (TSS)	Direct	36.8
	Indirect	516
Nonconventional Pollutants, Other (b)		
Ammonia as nitrogen	Direct, Indirect	0.673
Chemical oxygen demand (COD)	Direct, Indirect	57.4
Fluoride	Direct, Indirect	4.37
Total petroleum hydrocarbons (TPH)	Direct, Indirect	6.95
Priority Metals		
Lead	Direct, Indirect	0.0197
Zinc	Direct, Indirect	0.0754
Nonconventional Metals		
Iron	Direct, Indirect	8.28
Manganese	Direct, Indirect	0.0648
Molybdenum	Direct, Indirect	0.0544

(a) For this conventional pollutant, no data were available for the indirect site; therefore, EPA used the average baseline concentration for the direct discharging sites.
(b) Nonconventional pollutants other than nonconventional metals and nonconventional organic pollutants.

Sources: U.S. EPA, U.S. EPA Collection of 1997 Iron and Steel Industry Data (Detailed and Short Surveys), U.S. EPA Analytical and Production Data Follow-Up to the Collection of 1997 Iron and Steel Industry Data (Analytical and Production Survey), and U.S. EPA Iron and Steel Industry Wastewater Sampling Program, 1997-1999.

Table 11-20

Subcategory-Specific Average Baseline Pollutant Concentrations for the Integrated and Stand-Alone Hot Forming Subcategory Stainless Steel Segment

Pollutant of Concern	Type of Discharge	Subcategory-Specific Average Baseline Concentration (mg/L)
Conventional Pollutants		
Oil and grease (O&G)	Indirect	39.8
Total suspended solids (TSS)	Indirect	71.8
Nonconventional Pollutants, Other (a)		
Chemical oxygen demand (COD)	Indirect	173
Fluoride	Indirect	5.85
Total organic carbon (TOC)	Indirect	47.7
Total petroleum hydrocarbons (TPH)	Indirect	8.50
Priority Metals		
Antimony	Indirect	0.101
Chromium	Indirect	0.0815
Copper	Indirect	0.0861
Nickel	Indirect	1.02
Zinc	Indirect	2.90
Nonconventional Metals		
Iron	Indirect	3.43
Manganese	Indirect	0.400
Molybdenum	Indirect	7.21
Titanium	Indirect	0.00651

(a) Nonconventional pollutants other than nonconventional metals and nonconventional organic pollutants.

Sources: U.S. EPA, U.S. EPA Collection of 1997 Iron and Steel Industry Data (Detailed and Short Surveys), U.S. EPA Analytical and Production Data Follow-Up to the Collection of 1997 Iron and Steel Industry Data (Analytical and Production Survey), and U.S. EPA Iron and Steel Industry Wastewater Sampling Program, 1997-1999.

Table 11-21

Arithmetic Means of BAT Performance Data for the Integrated and Stand-Alone Hot Forming Subcategory Carbon and Alloy Steel Segment

Pollutant of Concern	Option	Arithmetic Mean of BAT Performance Data (mg/L)
Conventional Pollutants		
Oil and grease (O&G)	BAT-1, PSES-1	6.58 (a)
Total suspended solids (TSS)	BAT-1, PSES-1	9.88 (a)
Nonconventional Pollutants, Other (b)		
Ammonia as nitrogen	BAT-1, PSES-1	0.615
Chemical oxygen demand (COD)	BAT-1, PSES-1	36.5
Fluoride	BAT-1, PSES-1	1.33
Total petroleum hydrocarbons (TPH)	BAT-1, PSES-1	5.69
Priority Metals		
Lead	BAT-1, PSES-1	0.0120
Zinc	BAT-1, PSES-1	0.0879 (a)
Nonconventional Metals		
Iron	BAT-1, PSES-1	2.45
Manganese	BAT-1, PSES-1	0.0308
Molybdenum	BAT-1, PSES-1	0.0890

(a) EPA's statisticians calculated this LTA at proposal. The statisticians calculated the LTAs for regulated pollutants only.
(b) Nonconventional pollutants other than nonconventional metals and nonconventional organic pollutants.

Sources: U.S. EPA, U.S. EPA Collection of 1997 Iron and Steel Industry Data (Detailed and Short Surveys), U.S. EPA Analytical and Production Data Follow-Up to the Collection of 1997 Iron and Steel Industry Data (Analytical and Production Survey), and U.S. EPA Iron and Steel Industry Wastewater Sampling Program, 1997-1999.

Table 11-22

Arithmetic Means of BAT Performance Data for the Integrated and Stand-Alone Hot Forming Subcategory Stainless Steel Segment (a)

Pollutant of Concern	Option	Arithmetic Mean of BAT Performance Data (mg/L)
Conventional Pollutants		
Oil and grease (O&G)	PSES-1	9.20 (b)
Total suspended solids (TSS)	PSES-1	7.27 (b)
Nonconventional Pollutants, Other (c)		
Chemical oxygen demand (COD)	PSES-1	44.6
Total organic carbon (TOC)	PSES-1	11.2
Fluoride	PSES-1	14.9
Total petroleum hydrocarbons (TPH)	PSES-1	7.13
Priority Metals		
Antimony	PSES-1	0.260
Chromium	PSES-1	0.0251 (c)
Copper	PSES-1	0.00904
Nickel	PSES-1	0.108 (c)
Zinc	PSES-1	0.0710
Nonconventional Metals		
Iron	PSES-1	0.658
Manganese	PSES-1	0.0492
Molybdenum	PSES-1	1.23
Titanium	PSES-1	0.00900

(a) EPA transferred LTAs for this segment from the stainless segment of the non-integrated steelmaking and hot forming subcategory.
(b) EPA's statisticians calculated this LTA at proposal. The statisticians calculated the LTAs for regulated pollutants only.
(c) Nonconventional pollutants other than nonconventional metals and nonconventional organic pollutants.

Sources: U.S. EPA, U.S. EPA Collection of 1997 Iron and Steel Industry Data (Detailed and Short Surveys), U.S. EPA Analytical and Production Data Follow-Up to the Collection of 1997 Iron and Steel Industry Data (Analytical and Production Survey), and U.S. EPA Iron and Steel Industry Wastewater Sampling Program, 1997-1999.

Table 11-23

Summary of Baseline and Treated Pollutant Loadings and Pollutant Removals for the Integrated and Stand-Alone Hot Forming Subcategory Carbon and Alloy Steel Segment Direct Dischargers

Pollutant of Concern	Baseline Load (lbs/yr)	BAT-1 Treated Load Discharged to Surface Water (lbs/yr)	BAT-1 Pollutant Removals (lbs/yr)
Conventional Pollutants			
Oil and grease (O&G)	7,520,000	357,000	7,170,000
Total suspended solids (TSS)	28,900,000	799,000	28,100,000
Total Conventional Pollutants	**36,400,000**	**1,160,000**	**35,300,000**
Nonconventional Pollutants, Other (a)			
Ammonia as nitrogen	700,000	36,200	664,000
Chemical oxygen demand (COD)	50,500,000	2,180,000	48,300,000
Fluoride	4,440,000	93,800	4,340,000
Total petroleum hydrocarbons (TPH)	7,420,000	318,000	7,100,000
Total Nonconventional Pollutants, Other (b)	**5,140,000**	**130,000**	**5,000,000**
Priority Metals			
Lead	20,400	767	19,600
Zinc	75,900	3,320	72,600
Total Priority Metals	**96,300**	**4,090**	**92,200**
Nonconventional Metals			
Iron	7,330,000	165,000	7,170,000
Manganese	69,300	1,920	67,400
Molybdenum	55,800	2,540	53,200
Total Nonconventional Metals	**7,460,000**	**169,000**	**7,290,000**

(a) Nonconventional pollutants other than nonconventional metals and nonconventional organic pollutants.
(b) Total does not include COD or TPH.

Note: Survey weights were applied to the pollutant loadings and removals presented in this table.

Table 11-24

Summary of Baseline and Treated Pollutant Loadings and Removals for the Integrated and Stand-Alone Hot Forming Subcategory Carbon and Alloy Steel Segment Indirect Dischargers

Pollutant of Concern	Baseline Load (lbs/yr)	PSES-1 Treated Load Discharged from POTW (lbs/yr)	PSES-1 Pollutant Removals (lbs/yr)
Nonconventional Pollutants, Other (a)			
Ammonia as nitrogen	393	191	202
Chemical oxygen demand (COD)	10,400	4,550	5,880
Fluoride	1,920	723	1,200
Total petroleum hydrocarbons (TPH)	864	405	459
Total Nonconventional Pollutants, Other (b)	**2,310**	**914**	**1,400**
Priority Metals			
Lead	1.99	1.55	0.438
Zinc	16.7	8.01	8.7
Total Priority Metals	**18.7**	**9.56**	**9.14**
Nonconventional Metals			
Iron	4,710	534	4,170
Manganese	39.6	16.1	23.5
Molybdenum	42.1	21.1	21
Total Nonconventional Metals	**4,790**	**571**	**4,210**

(a) Nonconventional pollutants other than nonconventional metals and nonconventional organic pollutants.
(b) Total does not include COD or TPH.

Note: Survey weights and POTW percent removals were applied to the pollutant loadings and removals presented in this table (i.e., represents what is discharged to the receiving stream).

Table 11-25

Summary of Baseline and Treated Pollutant Loadings and Pollutant Removals for the Integrated and Stand-Alone Hot Forming Subcategory Stainless Steel Segment Indirect Dischargers

Pollutant of Concern	Baseline Load (lbs/yr)	PSES-1 Treated Load Discharged from POTW (lbs/yr)	PSES-1 Pollutant Removals (lbs/yr)
Nonconventional Pollutants, Other (a)			
Chemical oxygen demand (COD)	4,780	339	4,440
Fluoride	392	38.8	353
Total organic carbon (TOC)	2,080	48.6	2,040
Total petroleum hydrocarbons (TPH)	161	15	146
Total Nonconventional Pollutants, Other (b)	**392**	**38.8**	**353**
Priority Metals			
Antimony	4.86	0.481	4.38
Chromium	2.38	0.0724	2.3
Copper	2.01	0.0209	1.99
Nickel	72.5	0.764	71.7
Zinc	88.8	5.51	83.3
Total Priority Metals	**171**	**6.85**	**164**
Nonconventional Metals			
Iron	89.9	6.15	83.8
Manganese	37.4	2.46	34.9
Molybdenum	851	57.6	794
Titanium	0.076	0.00751	0.0684
Total Nonconventional Metals	**978**	**66.2**	**913**

(a) Nonconventional pollutants other than nonconventional metals and nonconventional organic pollutants.
(b) Total does not include COD, TPH, or TOC.

Note: Survey weights and POTW percent removals were applied to the pollutant loadings and removals presented in this table (i.e., represents what is discharged to the receiving stream).

Table 11-26
Subcategory-Specific Average Baseline Pollutant Concentrations for the Non-Integrated Steelmaking and Hot Forming Subcategory Carbon and Alloy Steel Segment

Pollutant of Concern	Type of Discharge	Subcategory-Specific Average Baseline Concentration (mg/L)
Conventional Pollutants		
Oil and grease (O&G)	Direct	5.11
	Indirect	13.7
Total suspended solids (TSS)	Direct	17.7
	Indirect	24.0
Nonconventional Pollutants, Other (a)		
Ammonia as nitrogen	Direct, Indirect	0.267
Chemical oxygen demand (COD)	Direct, Indirect	68.8
Fluoride	Direct, Indirect	0.41
Nitrate/nitrite	Direct, Indirect	0.2
Total organic carbon (TOC)	Direct, Indirect	16.4
Total petroleum hydrocarbons (TPH)	Direct, Indirect	4.16
Priority Metals		
Copper	Direct, Indirect	0.0794
Lead	Direct, Indirect	0.0187
Zinc	Direct, Indirect	0.0862
Nonconventional Metals		
Boron	Direct, Indirect	0.0766
Iron	Direct, Indirect	2.61
Manganese	Direct, Indirect	0.304
Molybdenum	Direct, Indirect	0.0318

(a) Nonconventional pollutants other than nonconventional metals and nonconventional organic pollutants.

Sources: U.S. EPA, U.S. EPA Collection of 1997 Iron and Steel Industry Data (Detailed and Short Surveys), U.S. EPA Analytical and Production Data Follow-Up to the Collection of 1997 Iron and Steel Industry Data (Analytical and Production Survey), and U.S. EPA Iron and Steel Industry Wastewater Sampling Program, 1997-1999.

Table 11-27

Subcategory-Specific Average Baseline Pollutant Concentrations for the Non-Integrated Steelmaking and Hot Forming Subcategory Stainless Steel Segment

Pollutant of Concern	Type of Discharge	Subcategory-Specific Average Baseline Concentration (mg/L)
Conventional Pollutants		
Oil and grease (O&G)	Direct	7.28
	Indirect	31.3
Total suspended solids (TSS)	Direct	11.9
	Indirect	53.4
Nonconventional Pollutants, Other (a)		
Ammonia as nitrogen	Direct, Indirect	0.688
Chemical oxygen demand (COD)	Direct, Indirect	125
Fluoride	Direct, Indirect	48.6
Nitrate/nitrite	Direct, Indirect	2.75
Total organic carbon (TOC)	Direct, Indirect	36.9
Total petroleum hydrocarbons (TPH)	Direct	7.28(b)
	Indirect	7.39
Priority Metals		
Antimony	Direct, Indirect	0.0653
Chromium	Direct, Indirect	0.180
Copper	Direct, Indirect	0.0807
Lead	Direct, Indirect	0.0415
Nickel	Direct, Indirect	0.783
Zinc	Direct, Indirect	1.71
Nonconventional Metals		
Aluminum	Direct, Indirect	0.514
Boron	Direct, Indirect	1.05
Hexavalent chromium	Direct, Indirect	0.0852
Iron	Direct, Indirect	3.87
Manganese	Direct, Indirect	0.333
Molybdenum	Direct, Indirect	8.16

Table 11-27 (Continued)

Pollutant of Concern	Type of Discharge	Subcategory-Specific Average Baseline Concentration (mg/L)
Nonconventional Metals (cont.)		
Titanium	Direct, Indirect	0.0069

(a) Nonconventional pollutants other than nonconventional metals and nonconventional organic pollutants.
(b) The O&G average concentration for direct discharging sites was used as the TPH average concentration for direct discharging sites because the average baseline concentration for TPH was greater than the O&G average baseline concentration. A pollutant within a bulk parameter cannot be greater than the bulk parameter.

Sources: U.S. EPA, U.S. EPA Collection of 1997 Iron and Steel Industry Data (Detailed and Short Surveys), U.S. EPA Analytical and Production Data Follow-Up to the Collection of 1997 Iron and Steel Industry Data (Analytical and Production Survey), and U.S. EPA Iron and Steel Industry Wastewater Sampling Program, 1997-1999.

Table 11-28

LTAs for the Non-Integrated Steelmaking and Hot Forming Subcategory Carbon and Alloy Steel Segment

Pollutant of Concern	Option	Arithmetic Mean of BAT Performance Data (mg/L)
Conventional Pollutants		
Oil and grease (O&G)	BAT-1, PSES-1	8.43
Total suspended solids (TSS)	BAT-1, PSES-1	16.7
Nonconventional Pollutants, Other (a)		
Ammonia as nitrogen	BAT-1, PSES-1	0.615
Chemical oxygen demand (COD)	BAT-1, PSES-1	36.5
Fluoride	BAT-1, PSES-1	1.33
Nitrate/nitrite	BAT-1, PSES-1	(b)
Total organic carbon (TOC)	BAT-1, PSES-1	(b)
Total petroleum hydrocarbons (TPH)	BAT-1, PSES-1	5.69
Priority Metals		
Copper	BAT-1, PSES-1	(b)
Lead	BAT-1, PSES-1	0.00590
Zinc	BAT-1, PSES-1	0.0746
Nonconventional Metals		
Boron	BAT-1, PSES-1	(b)
Iron	BAT-1, PSES-1	4.06
Manganese	BAT-1, PSES-1	0.0308
Molybdenum	BAT-1, PSES-1	0.0890

(a) Nonconventional pollutants other than nonconventional metals and nonconventional organic pollutants.
(b) EPA did not calculate an arithmetic mean of BAT performance data for this POC due to a lack of applicable effluent data.

Table 11-29

Arithmetic Means of BAT Performance Data for the Non-Integrated Steelmaking and Hot Forming Subcategory Stainless Steel Segment

Pollutant of Concern	Option	Arithmetic Mean of BAT Performance Data (mg/L)
Conventional Pollutants		
Oil and grease (O&G)	BAT-1, PSES-1	8.78
Total suspended solids (TSS)	BAT-1, PSES-1	6.36
Nonconventional Pollutants, Other (a)		
Ammonia as nitrogen	BAT-1, PSES-1	0.200
Chemical oxygen demand (COD)	BAT-1, PSES-1	44.6
Fluoride	BAT-1, PSES-1	14.9
Nitrate/nitrite	BAT-1, PSES-1	0.0571
Total organic carbon (TOC)	BAT-1, PSES-1	11.2
Total petroleum hydrocarbons (TPH)	BAT-1, PSES-1	7.13
Priority Metals		
Antimony	BAT-1, PSES-1	0.255
Chromium	BAT-1, PSES-1	0.0251 (b)
Copper	BAT-1, PSES-1	0.00904
Lead	BAT-1, PSES-1	0.0143
Nickel	BAT-1, PSES-1	0.108 (b)
Zinc	BAT-1, PSES-1	0.0846
Nonconventional Metals		
Aluminum	BAT-1, PSES-1	0.109
Boron	BAT-1, PSES-1	0.292
Hexavalent chromium	BAT-1, PSES-1	0.0164
Iron	BAT-1, PSES-1	0.558
Manganese	BAT-1, PSES-1	0.0492
Molybdenum	BAT-1, PSES-1	1.23
Titanium	BAT-1, PSES-1	0.00900

(a) Nonconventional pollutants other than nonconventional metals and nonconventional organic pollutants.
(b) EPA's statisticians calculated this LTA at proposal. The statisticians calculated the LTAs for regulated pollutants only.

Sources: U.S. EPA, U.S. EPA Collection of 1997 Iron and Steel Industry Data (Detailed and Short Surveys), U.S. EPA Analytical and Production Data Follow-Up to the Collection of 1997 Iron and Steel Industry Data (Analytical and Production Survey), and U.S. EPA Iron and Steel Industry Wastewater Sampling Program, 1997-1999.

Table 11-30

Summary of Baseline and Treated Pollutant Loadings and Pollutant Removals for the Non-Integrated Steelmaking and Hot Forming Subcategory Carbon and Alloy Steel Segment Direct Dischargers

Pollutant of Concern	Baseline Load (lbs/yr)	BAT-1 Treated Load Discharged to Surface Water (lbs/yr)	BAT-1 Pollutant Removals (lbs/yr)
Conventional Pollutants			
Oil and grease (O&G)	747,000	85,300	662,000
Total suspended solids (TSS)	2,430,000	237,000	2,190,000
Total Conventional Pollutants	**3,180,000**	**322,000**	**2,850,000**
Nonconventional Pollutants, Other (a)			
Ammonia as nitrogen	37,700	4,360	33,300
Chemical oxygen demand (COD)	9,550,000	926,000	8,620,000
Fluoride	57,100	6,440	50,600
Nitrate/nitrite	27,800	27,800	0
Total organic carbon (TOC)	2,270,000	2,270,000	0
Total petroleum hydrocarbons (TPH)	571,000	60,700	510,000
Total Nonconventional Pollutants, Other (b)	**123,000**	**38,600**	**83,900**
Priority Metals			
Copper	11,100	11,100	0
Lead	2,470	193	2,280
Zinc	11,400	1,080	10,300
Total Priority Metals	**25,000**	**12,400**	**12,600**
Nonconventional Metals			
Boron	10,700	10,700	0
Iron	362,000	41,600	320,000
Manganese	43,100	3,770	39,300
Molybdenum	4,420	498	3,920
Total Nonconventional Metals	**420,000**	**56,600**	**363,000**

(a) Nonconventional pollutants other than nonconventional metals and nonconventional organic pollutants.
(b) Total does not include COD, TPH, or TOC.

Note: Survey weights were applied to the pollutant loadings and removals presented in this table.

Table 11-31

Summary of Baseline and Treated Pollutant Loadings and Pollutant Removals for the Non-Integrated Steelmaking and Hot Forming Subcategory Stainless Steel Segment Direct Dischargers

Pollutant of Concern	Baseline Load (lbs/yr)	BAT-1 Treated Load Discharged to Surface Water (lbs/yr)	BAT-1 Pollutant Removals (lbs/yr)
Conventional Pollutants			
Oil and grease (O&G)	12,800	6,650	6,140
Total suspended solids (TSS)	21,300	10,300	11,000
Total Conventional Pollutants	**34,100**	**17,000**	**17,100**
Nonconventional Pollutants, Other (a)			
Ammonia as nitrogen	1,170	551	618
Chemical oxygen demand (COD)	213,000	102,000	111,000
Fluoride	82,100	44,400	37,700
Nitrate/nitrite	4,270	2,120	2,150
Total organic carbon (TOC)	63,700	30,300	33,400
Total petroleum hydrocarbons (TPH)	12,500	6,460	6,020
Total Nonconventional Pollutants, Other (b)	**87,500**	**47,100**	**40,500**
Priority Metals			
Antimony	126	73.9	52.1
Chromium	296	156	140
Copper	130	64.2	65.5
Lead	64	31.7	32.3
Nickel	1,250	611	637
Zinc	2,810	1,310	1,510
Total Priority Metals	**4,680**	**2,250**	**2,440**
Nonconventional Metals			
Aluminum	873	447	426
Boron	1,800	931	870
Hexavalent chromium	143	76.3	66.6
Iron	6,130	3,110	3,020
Manganese	538	261	277
Molybdenum	13,700	6,480	7,200

Table 11-31 (Continued)

Pollutant of Concern	Baseline Load (lbs/yr)	BAT-1 Treated Load Discharged to Surface Water (lbs/yr)	BAT-1 Pollutant Removals (lbs/yr)
Nonconventional Metals (cont.)			
Titanium	12.1	6.43	5.69
Total Nonconventional Metals	**23,200**	**11,300**	**11,900**

(a) Nonconventional pollutants other than nonconventional metals and nonconventional organic pollutants.
(b) Total does not include COD, TPH, or TOC.

Note: Survey weights were applied to the pollutant loadings and removals presented in this table.

Table 11-32

Summary of Baseline and Treated Pollutant Loadings for the Non-Integrated Steelmaking and Hot Forming Subcategory Carbon and Alloy Steel Segment Indirect Dischargers

Pollutant of Concern	Baseline Load (lbs/yr)	PSES-1 Treated Load Discharged from POTW (lbs/yr)	PSES-1 Pollutant Removals (lbs/yr)
Nonconventional Pollutants, Other (a)			
Ammonia as nitrogen	815	629	186
Chemical oxygen demand (COD)	65,400	43,200	22,200
Fluoride	946	730	216
Nitrate/nitrite	100	100	0
Total organic carbon (TOC)	24,700	24,700	0
Total petroleum hydrocarbons (TPH)	2,710	2,090	618
Total Nonconventional Pollutants, Other (b)	**1,860**	**1,460**	**402**
Priority Metals			
Copper	58.4	58.4	0
Lead	22.6	12.8	9.71
Zinc	122	64	57.9
Total Priority Metals	**203**	**135**	**67.6**
Nonconventional Metals			
Boron	292	292	0
Iron	2,310	1,800	518
Manganese	976	541	434
Molybdenum	230	201	29.4
Total Nonconventional Metals	**3,810**	**2,830**	**981**

(a) Nonconventional pollutants other than nonconventional metals and nonconventional organic pollutants.
(b) Total does not include COD, TPH, or TOC.

Note: Survey weights and POTW percent removals were applied to the pollutant loadings and removals presented in this table (i.e., represents what is discharged to the receiving stream).

Table 11-33

Summary of Baseline and Treated Pollutant Loadings and Pollutant Removals for the Non-Integrated Steelmaking and Hot Forming Subcategory Stainless Steel Segment Indirect Dischargers

Pollutant of Concern	Baseline Load (lbs/yr)	PSES-1 Treated Load Discharged from POTW (lbs/yr)	PSES-1 Pollutant Removals (lbs/yr)
Nonconventional Pollutants, Other (a)			
Ammonia as nitrogen	422	30.9	391
Chemical oxygen demand (COD)	22,800	1,770	21,000
Fluoride	20,500	1,460	19,000
Nitrate/nitrite	288	17.1	271
Total organic carbon (TOC)	10,700	805	9,900
Total petroleum hydrocarbons (TPH)	906	80.7	826
Total Nonconventional Pollutants, Other (b)	**21,200**	**1,510**	**19,700**
Priority Metals			
Antimony	19.7	1.6	18.1
Chromium	32.9	1.59	31.3
Copper	12	0.612	11.3
Lead	9.43	0.478	8.96
Nickel	357	23.9	333
Zinc	334	15.2	319
Total Priority Metals	**765**	**43.4**	**722**
Nonconventional Metals			
Aluminum	43.6	3.25	40.3
Boron	749	58.4	691
Hexavalent chromium	72.2	3.82	68.4
Iron	657	45.9	611
Manganese	204	14.4	190
Molybdenum	6,570	447	6,120
Titanium	0.524	0.0508	0.473
Total Nonconventional Metals	**8,300**	**573**	**7,720**

(a) Nonconventional pollutants other than nonconventional metals and nonconventional organic pollutants.
(b) Total does not include COD, TPH, or TOC.

Note: Survey weights and POTW percent removals were applied to the pollutant loadings and removals presented in this table (i.e., represents what is discharged to the receiving stream).

Table 11-34

Subcategory-Specific Average Baseline Pollutant Concentrations for the Steel Finishing Subcategory Carbon and Alloy Steel Segment

Pollutant of Concern	Type of Discharge	Subcategory-Specific Average Baseline Concentration (mg/L)
Conventional Pollutants		
Oil and grease (O&G)	Direct	nd
	Indirect	nd
Total suspended solids (TSS)	Direct	nd
	Indirect	nd
Nonconventional Pollutants, Other (a)		
Ammonia as nitrogen	Direct, Indirect	2.00
Chemical oxygen demand (COD)	Direct, Indirect	106
Fluoride	Direct, Indirect	0.931
Nitrate/nitrite	Direct, Indirect	0.700
Total organic carbon (TOC)	Direct, Indirect	31.8
Total petroleum hydrocarbons (TPH)	Direct, Indirect	6.02
Total phenols	Direct, Indirect	0.125
Priority Metals		
Antimony	Direct, Indirect	0.0249
Arsenic	Direct, Indirect	0.00632
Chromium	Direct, Indirect	0.0334
Copper	Direct, Indirect	0.0475
Lead	Direct, Indirect	0.0191
Nickel	Direct, Indirect	0.235
Zinc	Direct, Indirect	0.143
Nonconventional Metals		
Aluminum	Direct, Indirect	0.354
Boron	Direct, Indirect	0.0763
Hexavalent chromium	Direct, Indirect	0.0204
Iron	Direct, Indirect	0.854
Manganese	Direct, Indirect	0.0575
Molybdenum	Direct, Indirect	0.0311
Tin	Direct, Indirect	0.0438
Titanium	Direct, Indirect	0.00420

Table 11-34 (Continued)

Pollutant of Concern	Type of Discharge	Subcategory-Specific Average Baseline Concentration (mg/L)
Priority Organic Pollutants		
Bis(2-ethylhexyl) phthalate	Direct, Indirect	0.0184
Nonconventional Organic Pollutants		
alpha-Terpineol	Direct, Indirect	0.0310
n-Dodecane	Direct, Indirect	0.0199
n-Hexadecane	Direct, Indirect	0.0193
2-Propanone	Direct, Indirect	0.139

(a) Nonconventional pollutants other than nonconventional metals and nonconventional organic pollutants.

nd - This information is not disclosed to prevent compromising confidential business information.

Sources: U.S. EPA, U.S. EPA Collection of 1997 Iron and Steel Industry Data (Detailed and Short Surveys), U.S. EPA Analytical and Production Data Follow-Up to the Collection of 1997 Iron and Steel Industry Data (Analytical and Production Survey), and U.S. EPA Iron and Steel Industry Wastewater Sampling Program, 1997-1999.

Table 11-35

Subcategory-Specific Average Baseline Pollutant Concentrations for the Steel Finishing Subcategory Stainless Steel Segment

Pollutant of Concern	Type of Discharge	Subcategory-Specific Average Baseline Concentration (mg/L)
Conventional Pollutants		
Oil and grease (O&G)	Direct	nd
	Indirect	nd
Total suspended solids (TSS)	Direct	nd
	Indirect	nd
Nonconventional Pollutants, Other (a)		
Ammonia as nitrogen	Direct, Indirect	18.0
Chemical oxygen demand (COD)	Direct, Indirect	44.3
Fluoride	Direct, Indirect	112
Nitrate/nitrite	Direct, Indirect	506
Total organic carbon (TOC)	Direct, Indirect	10.2
Total petroleum hydrocarbons (TPH)	Direct, Indirect	6.20
Total phenols	Direct, Indirect	0.0517
Priority Metals		
Antimony	Direct, Indirect	0.0140
Arsenic	Direct, Indirect	0.00489
Chromium	Direct, Indirect	0.138
Copper	Direct, Indirect	0.0218
Lead	Direct, Indirect	0.0282
Nickel	Direct, Indirect	0.278
Zinc	Direct, Indirect	0.0315
Nonconventional Metals		
Aluminum	Direct, Indirect	0.0730
Barium	Direct, Indirect	0.0179
Boron	Direct, Indirect	0.142
Cobalt	Direct, Indirect	0.0114
Hexavalent chromium	Direct, Indirect	0.0335
Iron	Direct, Indirect	0.947
Magnesium	Direct, Indirect	21.7
Manganese	Direct, Indirect	0.136

Table 11-35 (Continued)

Pollutant of Concern	Type of Discharge	Subcategory-Specific Average Baseline Concentration (mg/L)
Nonconventional Metals (cont.)		
Molybdenum	Direct, Indirect	0.449
Tin	Direct, Indirect	0.00340
Titanium	Direct, Indirect	0.00440
Nonconventional Organic Pollutants		
Hexanoic acid	Direct, Indirect	0.0150
n-Dodecane	Direct, Indirect	0.0189
n-Hexadecane	Direct, Indirect	0.0258
2-Propanone	Direct, Indirect	0.0502
Other Priority Pollutants		
Total cyanide	Direct, Indirect	0.608

(a) Nonconventional pollutants other than nonconventional metals and nonconventional organic pollutants.

nd - This information is not disclosed to prevent compromising confidential business information.

Sources: U.S. EPA, U.S. EPA Collection of 1997 Iron and Steel Industry Data (Detailed and Short Surveys), U.S. EPA Analytical and Production Data Follow-Up to the Collection of 1997 Iron and Steel Industry Data (Analytical and Production Survey), and U.S. EPA Iron and Steel Industry Wastewater Sampling Program, 1997-1999.

Table 11-36

Arithmetic Means of BAT Performance Data for the Steel Finishing Subcategory Carbon and Alloy Steel Segment

Pollutant of Concern	Type of Operation (a)	Option	Arithmetic Mean of BAT Performance Data (mg/L)
Conventional Pollutants			
Oil and grease (O&G)	All	BAT-1, PSES-1	12.1
Total suspended solids (TSS)	All	BAT-1, PSES-1	12.8
Nonconventional Pollutants, Other (b)			
Ammonia as nitrogen	All	BAT-1, PSES-1	1.81
Chemical oxygen demand (COD)	All	BAT-1, PSES-1	131
Fluoride	All	BAT-1, PSES-1	0.780
Nitrate/nitrite	All	BAT-1, PSES-1	0.476
Total organic carbon (TOC)	All	BAT-1, PSES-1	36.6
Total petroleum hydrocarbons (TPH)	All	BAT-1, PSES-1	6.29
Total phenols	All	BAT-1, PSES-1	0.0754
Priority Metals			
Antimony	All	BAT-1, PSES-1	0.0133
Arsenic	All	BAT-1, PSES-1	0.00169
Chromium	All	BAT-1, PSES-1	0.0144
Copper	All	BAT-1, PSES-1	0.0122
Lead	All	BAT-1, PSES-1	0.00654
Nickel	All	BAT-1, PSES-1	0.0314
Zinc	All	BAT-1, PSES-1	0.0718
Nonconventional Metals			
Aluminum	All	BAT-1, PSES-1	0.0876
Boron	All	BAT-1, PSES-1	0.0937
Hexavalent chromium	All	BAT-1, PSES-1	0.0104
Iron	All	BAT-1, PSES-1	0.667
Manganese	All	BAT-1, PSES-1	0.0799
Molybdenum	All	BAT-1, PSES-1	0.0225
Tin	All	BAT-1, PSES-1	0.00833

Table 11-36 (Continued)

Pollutant of Concern	Type of Operation (a)	Option	Arithmetic Mean of BAT Performance Data (mg/L)
Nonconventional Metals (cont.)			
Titanium	All	BAT-1, PSES-1	0.00433
Priority Organic Pollutants			
Bis(2-ethylhexyl) phthalate	All	BAT-1, PSES-1	0.0100
Nonconventional Organic Pollutants			
alpha-Terpineol	All	BAT-1, PSES-1	0.0321
n-Dodecane	All	BAT-1, PSES-1	0.0105
n-Hexadecane	All	BAT-1, PSES-1	0.0117
2-Propanone	All	BAT-1, PSES-1	0.185

(a) Operation types include: acid pickling, alkaline cleaning, annealing, cold forming, descaling, electroplating, and hot dip coating.
(b) Nonconventional pollutants other than nonconventional metals and nonconventional organic pollutants.

Table 11-37

Arithmetic Means of BAT Performance Data for the Steel Finishing Subcategory Stainless Steel Segment

Pollutant of Concern	Type of Operation (a)	Option	Arithmetic Mean of BAT Performance Data (mg/L)
Conventional Pollutants			
Oil and grease (O&G)	All	BAT-1, PSES-1	6.20 (b)
Total suspended solids (TSS)	All	BAT-1, PSES-1	3.42
Nonconventional Pollutants, Other (c)			
Ammonia as nitrogen	All	BAT-1, PSES-1	11.7 (b)
Chemical oxygen demand (COD)	All	BAT-1, PSES-1	14.4
Fluoride	All	BAT-1, PSES-1	16.3 (b)
Nitrate/nitrite	All	BAT-1, PSES-1	93.9
Total organic carbon (TOC)	All	BAT-1, PSES-1	3.43
Total petroleum hydrocarbons (TPH)	All	BAT-1, PSES-1	5.89
Total phenols	All	BAT-1, PSES-1	0.0500
Priority Metals			
Antimony	All	BAT-1, PSES-1	0.00691
Arsenic	All	BAT-1, PSES-1	0.00173
Chromium	All	BAT-1, PSES-1	0.104 (b)
Copper	All	BAT-1, PSES-1	0.0231
Lead	All	BAT-1, PSES-1	0.00250
Nickel	All	BAT-1, PSES-1	0.0436 (b)
Zinc	All	BAT-1, PSES-1	0.00474
Nonconventional Metals			
Aluminum	All	BAT-1, PSES-1	0.0763
Barium	All	BAT-1, PSES-1	0.00833
Boron	All	BAT-1, PSES-1	0.151
Cobalt	All	BAT-1, PSES-1	0.0120
Hexavalent chromium	All	BAT-1, PSES-1	0.0800 (b)
Iron	All	BAT-1, PSES-1	0.0693
Magnesium	All	BAT-1, PSES-1	1.32
Manganese	All	BAT-1, PSES-1	0.00100
Molybdenum	All	BAT-1, PSES-1	1.03
Tin	All	BAT-1, PSES-1	0.00300
Titanium	All	BAT-1, PSES-1	0.00400

Table 11-37 (Continued)

Pollutant of Concern	Type of Operation (a)	Option	Arithmetic Mean of BAT Performance Data (mg/L)
Nonconventional Organic Pollutants			
Hexanoic acid	All	BAT-1, PSES-1	0.028
n-Dodecane	All	BAT-1, PSES-1	0.0421
n-Hexadecane	All	BAT-1, PSES-1	0.0669
2-Propanone	All	BAT-1, PSES-1	0.05
Other Priority Pollutants			
Total cyanide	All	BAT-1, PSES-1	0.0160

(a) Operation types include: acid pickling, alkaline cleaning, annealing, cold forming, descaling, electroplating, and hot dip coating.
(b) EPA's statisticians calculated this LTA at proposal. The statisticians calculated the LTAs for regulated pollutants only.
(c) Nonconventional pollutants other than nonconventional metals and nonconventional organic pollutants.

Sources: U.S. EPA, U.S. EPA Collection of 1997 Iron and Steel Industry Data (Detailed and Short Surveys), U.S. EPA Analytical and Production Data Follow-Up to the Collection of 1997 Iron and Steel Industry Data (Analytical and Production Survey), and U.S. EPA Iron and Steel Industry Wastewater Sampling Program, 1997-1999.

Table 11-38

Summary of Baseline and Treated Pollutant Loadings and Pollutant Removals for the Steel Finishing Subcategory Carbon and Alloy Steel Segment Direct Dischargers

Pollutant of Concern	Baseline Load (lbs/yr)	BAT-1 Treated Load Discharged to Surface Water (lbs/yr)	BAT-1 Pollutant Removals (lbs/yr)
Conventional Pollutants			
Oil and grease (O&G)	2,030,000	1,090,000	943,000
Total suspended solids (TSS)	1,900,000	990,000	910,000
Total Conventional Pollutants	**3,930,000**	**2,080,000**	**1,850,000**
Nonconventional Pollutants, Other (a)			
Ammonia as nitrogen	465,000	258,000	206,000
Chemical oxygen demand (COD)	22,300,000	11,800,000	10,500,000
Fluoride	234,000	102,000	133,000
Nitrate/nitrite	329,000	81,200	248,000
Total organic carbon (TOC)	6,460,000	3,310,000	3,150,000
Total petroleum hydrocarbons (TPH)	1,340,000	754,000	586,000
Total phenols	27,300	14,600	12,700
Total Nonconventional Pollutants, Other (b)	**1,030,000**	**441,000**	**587,000**
Priority Metals			
Antimony	5,250	2,660	2,590
Arsenic	1,260	598	660
Chromium	8,320	4,990	3,330
Copper	8,880	3,990	4,900
Lead	3,870	2,100	1,770
Nickel	46,200	21,700	24,500
Zinc	25,000	10,300	14,800
Total Priority Metals	**98,800**	**46,300**	**52,600**
Nonconventional Metals			
Aluminum	70,100	33,000	37,100
Boron	16,100	8,520	7,580
Hexavalent chromium	4,030	2,000	2,020
Iron	181,000	91,900	89,300
Manganese	12,200	6,480	5,750
Molybdenum	6,330	3,030	3,300

Table 11-38 (Continued)

Pollutant of Concern	Baseline Load (lbs/yr)	BAT-1 Treated Load Discharged to Surface Water (lbs/yr)	BAT-1 Pollutant Removals (lbs/yr)
Nonconventional Metals (cont.)			
Tin	8,680	4,090	4,600
Titanium	939	529	409
Total Nonconventional Metals	**299,000**	**150,000**	**150,000**
Priority Organic Pollutants			
Bis(2-ethylhexyl) phthalate	3,800	1,930	1,870
Nonconventional Organic Pollutants			
alpha-Terpineol	6,290	3,210	3,070
n-Dodecane	4,100	2,080	2,020
n-Hexadecane	4,060	2,100	1,960
2-Propanone	28,500	14,700	13,900
Total Nonconventional Organic Pollutants	**43,000**	**22,100**	**21,000**

(a) Nonconventional pollutants other than nonconventional metals and nonconventional organic pollutants.
(b) Total does not include COD, TPH, TOC, or total phenols.

Note: Survey weights were applied to the pollutant loadings and removals presented in this table.

Table 11-39

Summary of Baseline and Treated Pollutant Loadings and Pollutant Removals for the Steel Finishing Subcategory Stainless Steel Segment Direct Dischargers

Pollutant of Concern	Baseline Load (lbs/yr)	BAT-1 Treated Load Discharged to Surface Water (lbs/yr)	BAT-1 Pollutant Removals (lbs/yr)
Conventional Pollutants			
Oil and grease (O&G)	373,000	185,000	188,000
Total suspended solids (TSS)	998,000	342,000	656,000
Total Conventional Pollutants	**1,370,000**	**527,000**	**844,000**
Nonconventional Pollutants, Other (a)			
Ammonia as nitrogen	945,000	381,000	564,000
Chemical oxygen demand (COD)	2,250,000	793,000	1,460,000
Fluoride	5,270,000	1,680,000	3,580,000
Nitrate/nitrite	25,100,000	8,060,000	17,100,000
Total organic carbon (TOC)	518,000	185,000	333,000
Total petroleum hydrocarbons (TPH)	317,000	166,000	151,000
Total phenols	2,640	1,400	1,240
Total Nonconventional Pollutants, Other (b)	**31,300,000**	**10,100,000**	**21,200,000**
Priority Metals			
Antimony	702	282	420
Arsenic	211	88.5	122
Chromium	6,990	3,020	3,970
Copper	1,160	592	571
Lead	1,070	405	666
Nickel	12,800	4,160	8,680
Zinc	1,270	484	788
Total Priority Metals	**24,200**	**9,030**	**15,200**
Nonconventional Metals			
Aluminum	3,750	1,990	1,750
Barium	902	355	547
Boron	7,290	3,630	3,660
Cobalt	587	316	271
Hexavalent chromium	1,960	825	1,140
Iron	43,400	13,500	29,900

Table 11-39 (Continued)

Pollutant of Concern	Baseline Load (lbs/yr)	BAT-1 Treated Load Discharged to Surface Water (lbs/yr)	BAT-1 Pollutant Removals (lbs/yr)
Nonconventional Metals (cont.)			
Magnesium	1,090,000	306,000	783,000
Manganese	7,110	1,820	5,290
Molybdenum	23,900	11,800	12,000
Tin	174	87.8	86
Titanium	225	115	110
Total Nonconventional Metals	**1,180,000**	**340,000**	**838,000**
Nonconventional Organic Pollutants			
n-Dodecane	992	504	488
n-Hexadecane	1,370	682	683
Hexanoic acid	782	404	378
2-Propanone	2,570	1,380	1,190
Total Nonconventional Organic Pollutants	**5,710**	**2,970**	**2,740**
Other Priority Pollutants			
Total cyanide	29,900	8,300	21,600

(a) Nonconventional pollutants other than nonconventional metals and nonconventional organic pollutants.
(b) Total does not include COD, TPH, TOC, or total phenols.

Note: Survey weights were applied to the pollutant loadings and removals presented in this table.

Table 11-40

Summary of Baseline and Treated Pollutant Loadings and Pollutant Removals for the Steel Finishing Subcategory Carbon and Alloy Steel Segment Indirect Dischargers

Pollutant of Concern	Baseline Load (lbs/yr)	PSES-1 Treated Load Discharged from POTW (lbs/yr)	PSES-1 Pollutant Removals (lbs/yr)
Nonconventional Pollutants, Other (a)			
Ammonia as nitrogen	10,400	7,280	3,100
Chemical oxygen demand (COD)	168,000	118,000	50,000
Fluoride	3,700	2,610	1,090
Nitrate/nitrite	586	407	178
Total organic carbon (TOC)	79,700	55,400	24,200
Total petroleum hydrocarbons (TPH)	6,840	4,850	1,990
Total phenols	239	166	73.5
Total Nonconventional Pollutants, Other (b)	**14,700**	**10,300**	**4,370**
Priority Metals			
Antimony	71.6	50.6	21
Arsenic	21.6	15.1	6.57
Chromium	53.9	37.4	16.6
Copper	84.9	53.7	31.1
Lead	37.2	25.8	11.5
Nickel	931	652	279
Zinc	247	174	73
Total Priority Metals	**1,450**	**1,010**	**439**
Nonconventional Metals			
Aluminum	265	184	81.5
Boron	500	353	147
Hexavalent chromium	161	112	48.6
Iron	1,270	882	392
Manganese	308	215	93.6
Molybdenum	226	162	64.1
Tin	270	206	64
Titanium	2.9	2.05	0.854
Total Nonconventional Metals	**3,000**	**2,120**	**892**

Table 11-40 (Continued)

Pollutant of Concern	Baseline Load (lbs/yr)	PSES-1 Treated Load Discharged from POTW (lbs/yr)	PSES-1 Pollutant Removals (lbs/yr)
Priority Organic Pollutants			
Bis(2-ethylhexyl) phthalate	122	103	18.8
Nonconventional Organic Pollutants			
alpha-Terpineol	17.2	12.5	4.74
n-Dodecane	9.74	7.2	2.53
n-Hexadecane	55.2	40.9	14.3
2-Propanone	187	131	56.6
Total Nonconventional Organic Pollutants	**269**	**192**	**78.2**

(a) Nonconventional pollutants other than nonconventional metals and nonconventional organic pollutants.
(b) Total does not include COD, TPH, TOC, or total phenols.

Note: Survey weights and POTW percent removals were applied to the pollutant loadings and removals presented in this table (i.e., represents what is discharged to the receiving stream).

Table 11-41

Summary of Baseline and Treated Pollutant Loadings and Pollutant Removals for the Steel Finishing Subcategory Stainless Steel Segment Indirect Dischargers

Pollutant of Concern	Baseline Load (lbs/yr)	PSES-1 Treated Load Discharged from POTW (lbs/yr)	PSES-1 Pollutant Removals (lbs/yr)
Nonconventional Pollutants, Other (a)			
Ammonia as nitrogen	22,700	15,400	7,320
Chemical oxygen demand (COD)	17,400	10,300	7,110
Fluoride	113,000	58,000	55,200
Nitrate/nitrite	105,000	58,300	46,600
Total organic carbon (TOC)	6,360	3,780	2,580
Total petroleum hydrocarbons (TPH)	1,670	1,260	409
Total phenols	24.6	18.7	5.92
Total Nonconventional Pollutants, Other (b)	**241,000**	**132,000**	**109,000**
Priority Metals			
Antimony	9.54	6.07	3.47
Arsenic	3.79	2.06	1.73
Chromium	70.3	22.7	47.7
Copper	6.15	4.49	1.66
Lead	39.6	24.2	15.4
Nickel	147	39.1	108
Zinc	26.4	13.1	13.4
Total Priority Metals	**303**	**112**	**191**
Nonconventional Metals			
Aluminum	13.6	10.4	3.16
Barium	16.7	10.5	6.18
Boron	224	172	51.9
Cobalt	21.3	16.4	4.94
Hexavalent chromium	65.1	50	15.1
Iron	694	527	167
Magnesium	38,500	20,200	18,400
Manganese	116	27.7	88.3
Molybdenum	753	578	175

Table 11-41 (Continued)

Pollutant of Concern	Baseline Load (lbs/yr)	PSES-1 Treated Load Discharged from POTW (lbs/yr)	PSES-1 Pollutant Removals (lbs/yr)
Nonconventional Metals (cont.)			
Tin	4.01	2.96	1.05
Titanium	0.728	0.542	0.186
Total Nonconventional Metals	**40,400**	**21,600**	**18,900**
Nonconventional Organic Pollutants			
n-Dodecane	1.96	1.5	0.454
n-Hexadecane	15.5	11.9	3.6
Hexanoic acid	4.97	3.81	1.15
2-Propanone	16.6	12.7	3.87
Total Nonconventional Organic Pollutants	**39.0**	**29.9**	**9.07**
Other Priority Pollutants			
Total cyanide	325	194	132

(a) Nonconventional pollutants other than nonconventional metals and nonconventional organic pollutants.
(b) Total does not include COD, TPH, TOC, or total phenols.

Note: Survey weights and POTW percent removals were applied to the pollutant loadings and removals presented in this table (i.e., represents what is discharged to the receiving stream).

Table 11-42

Subcategory-Specific Average Baseline Pollutant Concentrations for the Other Operations Subcategory Forging Segment

Pollutant of Concern	Type of Discharge	Subcategory-Specific Average Baseline Concentration (mg/L)
Conventional Pollutants		
Oil and grease (O&G)	Direct	3.35
Total suspended solids (TSS)	Direct	32.10

Sources: U.S. EPA, U.S. EPA Collection of 1997 Iron and Steel Industry Data (Detailed and Short Surveys), U.S. EPA Analytical and Production Data Follow-Up to the Collection of 1997 Iron and Steel Industry Data (Analytical and Production Survey), and U.S. EPA Iron and Steel Industry Wastewater Sampling Program, 1997-1999.

Table 11-43

Arithmetic Means of BAT Performance Data for the Other Operations Subcategory DRI Segment

Pollutant of Concern	Option	Arithmetic Mean of BAT Performance Data (mg/L)
Conventional Pollutants		
Total suspended solids (TSS)	BPT	7.51 (a)
Nonconventional Pollutants, Other (b)		
Ammonia as nitrogen	BPT	13.4
Chemical oxygen demand (COD)	BPT	15.6
Fluoride	BPT	14.2
Nonconventional Metals		
Aluminum	BPT	0.0403
Iron	BPT	2.40
Manganese	BPT	1.25

(a) EPA's statisticians calculated this LTA at proposal. The statisticians calculated the LTAs for regulated pollutants only.
(b) Nonconventional pollutants other than nonconventional metals and nonconventional organic pollutants.

Sources: U.S. EPA, U.S. EPA Collection of 1997 Iron and Steel Industry Data (Detailed and Short Surveys), U.S. EPA Analytical and Production Data Follow-Up to the Collection of 1997 Iron and Steel Industry Data (Analytical and Production Survey), and U.S. EPA Iron and Steel Industry Wastewater Sampling Program, 1997-1999.

Table 11-44

Arithmetic Means of BAT Performance Data for the Other Operations Subcategory Forging Segment

Pollutant of Concern	Option	Arithmetic Mean of BAT Performance Data (mg/L)
Conventional Pollutants		
Oil and grease (O&G)	BPT	7.78
Total suspended solids (TSS)	BPT	6.50

Sources: U.S. EPA, U.S. EPA Collection of 1997 Iron and Steel Industry Data (Detailed and Short Surveys), U.S. EPA Analytical and Production Data Follow-Up to the Collection of 1997 Iron and Steel Industry Data (Analytical and Production Survey), and U.S. EPA Iron and Steel Industry Wastewater Sampling Program, 1997-1999.

Table 11-45

Summary of Baseline and Treated Pollutant Loadings and Pollutant Removals for the Other Operations Subcategory DRI Segment Direct Dischargers

Pollutant of Concern	Baseline Load (lbs/yr)	BPT Treated Load Discharged to Surface Water (lbs/yr)	BPT Pollutant Removals (lbs/yr)
Conventional Pollutants			
Total suspended solids (TSS)	4,580	3,190	1,380
Nonconventional Pollutants, Other (a)			
Ammonia as nitrogen	8,270	5,770	2,500
Chemical oxygen demand (COD)	9,630	6,720	2,910
Fluoride	8,770	6,120	2,650
Total Nonconventional Pollutants, Other (b)	**17,000**	**11,900**	**5,150**
Nonconventional Metals			
Aluminum	24.9	17.4	7.52
Iron	968	676	293
Manganese	772	538	233
Total Nonconventional Metals	**1,760**	**1,230**	**534**

(a) Nonconventional pollutants other than nonconventional metals and nonconventional organic pollutants.
(b) Total does not include COD.

Note: Survey weights were applied to the pollutant loadings and removals presented in this table.

Table 11-46

Summary of Baseline and Treated Pollutant Loadings Pollutant Removals for the Other Operations Subcategory Forging Segment Direct Dischargers

Pollutant of Concern	Baseline Load (lbs/yr)	BPT Treated Load Discharged to Surface Water (lbs/yr)	BPT Pollutant Removals (lbs/yr)
Conventional Pollutants			
Oil and grease (O&G)	480	352	129
Total suspended solids (TSS)	5,990	2,560	3,440
Total Conventional Pollutants	**6,470**	**2,910**	**3,570**

Note: Survey weights were applied to the pollutant loadings and removals presented in this table.

SECTION 12

REGULATED POLLUTANTS

This section describes the selection of pollutants being regulated by the revised effluent limitations guidelines and standards for current Subpart A (cokemaking) and Subpart B (sintering), and the newly promulgated effluent limitations guidelines and standards for new Subpart M (other operations). Regulated pollutants are pollutants for which EPA establishes numerical effluent limitations and standards. EPA selected pollutants for regulation based on the following factors: applicable Clean Water Act provisions regarding the pollutants subject to each statutory level; the pollutants of concern (POCs) identified for each subcategory and segment; and cotreatment of compatible wastewater from different manufacturing operations. This section describes the methodology and rationale EPA used to select the subset of regulated pollutant parameters from the list of pollutants of concern.

12.1 Regulated Pollutant Selection Methodology for Direct Dischargers

The list of POCs for each subcategory represents those pollutants that are present at treatable concentrations in a significant percentage of untreated wastewater samples from that subcategory; the selection of POCs for each subcategory is presented in Section 7 of this document. Effluent monitoring for all POCs is not necessary to ensure that iron and steel wastewater pollution is adequately controlled, since many of the pollutants originate from similar sources, have similar treatabilities, are removed by similar mechanisms, and are treated to similar concentrations. Therefore, it may be sufficient to monitor for one pollutant as a surrogate or indicator of several others.

From the POC list for each regulated subcategory, EPA selected a subset of pollutants for establishing numerical effluent limitations. EPA considered the following factors in selecting regulated pollutants from the list of POCs for each subcategory:

- The pollutant was detected in the untreated wastewater at the BAT facility/facilities at treatable levels in a significant number of samples. This was the same methodology applied in calculating long-term averages (LTAs) and is discussed in Section 14.

- The pollutant is not used as a treatment chemical in the selected treatment technology option. EPA excluded all pollutants that may serve as treatment chemicals: aluminum, boron, fluoride, iron, magnesium, manganese, and sulfate (several other pollutants are commonly used as treatment chemicals but were already excluded as POCs). EPA eliminated these pollutants because regulation of these pollutants could interfere with their beneficial use as wastewater treatment additives.

- The pollutant is not considered a nonconventional bulk parameter. EPA excluded many nonconventional bulk parameters, such as chemical

oxygen demand (COD), total Kjeldahl nitrogen (TKN), total organic carbon (TOC), nitrate/nitrite, and total petroleum hydrocarbons measured as silica gel treated hexane extractable material (SGT-HEM). In general, EPA excluded these parameters because it determined it is more appropriate to target specific compounds of interest rather than a parameter that measures a variety of pollutants for this industry. The specific pollutants that comprise the bulk parameter may or may not be of concern; if specific pollutants are of concern, they are usually considered individually.

- The pollutant is not considered to be volatile. EPA excluded almost all volatile pollutants because they are likely to be volatilized if they reach certain treatment system unit operations such as chemical precipitation or biological treatment. Volatile pollutants are not considered treated by some unit operations. For purposes of this evaluation, a pollutant was considered to be volatile if its Henry's Law Constant is greater than 10^{-4} atm·m^3/mol. If EPA could not obtain a Henry's Law Constant for a particular pollutant, it assumed the pollutant was not volatile.

- The pollutant is effectively treated by the selected treatment technology option. EPA excluded all pollutants for which the selected treatment option was ineffective (i.e., pollutant concentrations remained the same or increased across the treatment system).

- The pollutant is not adequately controlled through the regulation of another pollutant. This consideration depends on the pollutants of concern and the technology basis for the limitations. Generally, EPA selected at least one pollutant from each pollutant group considered for regulation to ensure control of all remaining POCs in the pollutant group, For example, when one or more metals is selected for regulation for a chemical precipitation system, EPA presumes that controlling those metals will control all other metals considered for regulation.

- The model technology is designed to treat the pollutant. The Agency did not regulate POCs for which the model treatment technology was not designed or intended to treat (e.g., chemical precipitation systems are not designed to treat organic constituents, so EPA would not select organic constituents for regulation at options using only chemical precipitation). EPA did not regulate these pollutants because these technologies can not consistently achieve the effluent concentrations.

The following subsections describe EPA's pollutant selection analysis for the cokemaking, sintering, and other operations subcategory.

12.1.1 Cokemaking Subcategory

The cokemaking subcategory covers the non-recovery and by-product recovery cokemaking segments.

Non-Recovery Segment

EPA established zero discharge of pollutants for the non-recovery segment of the cokemaking subcategory (BPT, BCT, BAT, and NSPS). Therefore, it did not apply its pollutant selection methodology to this segment.

By-Product Recovery Segment

This rule establishes BAT limitations for five pollutants: ammonia as nitrogen (ammonia-N), total cyanide, phenols (4AAP), benzo(a)pyrene, and naphthalene. It establishes NSPS limitations for the same five pollutants plus TSS, pH, and oil and grease measured as hexane extractable material (O&G). These limitations and standards are based primarily on ammonia stills and biological treatment with nitrification for direct dischargers. The regulated pollutant selection criteria matrix for the 72 POCs considered for regulation for the by-product recovery segment is illustrated in Table 12-1. The following discussion explains the rationale used to select which of the 72 POCs to regulate at BAT/NSPS.

- Conventional Pollutants: EPA identified biochemical oxygen demand, O&G, and TSS as POCs. These pollutants are not subject to BAT limitations and are adequately controlled by existing BPT/BCT limitations. EPA selected O&G, TSS, and pH as regulated pollutants for new sources, however.

- Nonconventional Bulk Parameters: EPA identified and excluded the following five nonconventional bulk parameters: chemical oxygen demand (COD), total Kjeldahl nitrogen (TKN), total organic carbon (TOC), nitrate/nitrite, and SGT-HEM.

  However, EPA established final regulations for the nonconventional bulk parameter for phenols (measured as 4 amino-antipyrene (4AAP))[1] rather than the proposed regulation of the compound phenol as measured with a gas chromatograph-mass spectrometer (GC-MS). EPA decided to continue to regulate phenols (measured as 4AAP) and is not making the change as proposed. The data in the record show that there are two primary phenolic compounds present in iron and steel wastewater: phenol and 2,4-dimethylphenol. Furthermore, the data show that by controlling phenols (4AAP), both of these compounds are effectively controlled. Compliance monitoring costs are lower for the bulk parameter for phenols

[1]Throughout this document and in this rulemaking record, EPA also refers to this as total phenols or total phenolics.

(4AAP) than for the compound phenol. Furthermore, since it takes longer to obtain laboratory results for phenol (GC-MS), EPA does not want to discourage routine monitoring of phenols (4AAP) that allows a mill to identify and respond quickly to potential upset conditions.

- Volatile Pollutants: For purposes of this evaluation, a pollutant was considered to be volatile if its Henry's Law Constant is greater than 10^{-4} atm·m^3/mol. The Henry's Law Constants for the organic POCs (those analyzed using Methods 1624 and 1625) are listed in Table 12-2. If EPA could not obtain a Henry's Law Constant for a particular pollutant, it assumed the pollutant was not volatile.

The Agency has developed National Emission Standards for Hazardous Air Pollutants under Section 112 of the Clean Air Act Amendments of 1990 that controls air emissions from cokemaking operations (58 FR 57898, October 1993). The Agency also proposed maximum achievable control technology air emission standards for pushing, quenching, and battery stacks at cokemaking plants. These regulations are currently scheduled for promulgation in December 2002. By-products recovery operations in the cokemaking subcategory remove the majority of hazardous air pollutants through processes that collect tar, heavy and light oils, ammonium sulfate and elemental sulfur. Ammonia removal by steam stripping could generate a potential air quality issue if uncontrolled; however, ammonia stripping operations at cokemaking facilities capture vapors and convert ammonia to either an inorganic salt or anhydrous ammonia, or destroy ammonia. The vapors are combined with coke oven gases and recycled back to the coke oven battery.

EPA identified 23 volatile pollutants as POCs for this segment. There are essentially three dominant processes that affect the removal of pollutants from wastewater within the selected BAT/NSPS treatment system unit operations: air stripping, adsorption to solids or the biomass, and biodegradation. The extent to which each process contributes to the removal of pollutants from wastewater can vary significantly. It is a function of both the physical and chemical characteristics of each pollutant, as well as the conditions present in each treatment unit operation. The higher a substance's Henry's Law Constant, the more likely that compound is to migrate from water to steam in the ammonia still. Unlike many technologies considered during the development of effluent guidelines, this technology does not achieve removal of volatile pollutants by volatilization into the air. The ammonia still portion of the model technology captures and recovers the steam.

Consequently, EPA selected one volatile pollutant, naphthalene, for regulation. EPA retained naphthalene for regulation because it is a

semivolatile compound and a good indicator of removal in the ammonia recovery system as well as biological treatment effectiveness. The Henry's Law Constant for naphthalene is 4.6 x 10^{-4} atm·m^3/mol which is slightly higher than EPA's criteria for identifying volatile compounds -- greater than 10^{-4} atm·m^3/mol. By regulating naphthalene, EPA is confident that the other 22 volatile pollutants will be effectively removed in the treatment system.

- Treatment Chemicals: EPA identified and eliminated one POC that is also used as a treatment chemical: boron.

- Pollutants Not Detected at Treatable Levels: 10 of 18 pollutants identified as Not Detected at Treatable Levels were excluded from regulation. These pollutants are: arsenic, 2-butanone, benzidine, benzo(ghi)perylene, benzo(k)fluoranthene, beta-naphthylamine, indeno(1,2,3-cd)pyrene, o-toluidine, perylene, and 1-naphthylamine. Boron, SGT-HEM, and six volatile compounds were already eliminated.

- Pollutants Not Treated Consistently: EPA eliminated three pollutants, selenium, mercury, and thiocyanate, because none of the treatment systems EPA considered were designed to achieve consistent effluent concentrations of these pollutants. Nitrate/nitrite was already eliminated.

- Pollutants Controlled By Regulation of Others: EPA eliminated amenable and WAD cyanide because they are controlled by total cyanide. Similarly, EPA eliminated phenol and 2,4-dimethylphenol because they are controlled by phenols (4AAP).

The remaining pollutants are all non-volatile organic compounds. As explained above, EPA had already selected naphthalene, a semi-volatile pollutant, for regulation. EPA additionally selected benzo(a)pyrene as a regulated pollutant as an indicator of effective biological treatment. While naphthalene can be removed to low levels using ammonia stripping alone, consistent benzo(a)pyrene levels require effective biological treatment. EPA selected benzo(a)pyrene as an indicator of biological treatment because of its toxicity, chemical structure, physical properties, and frequency of detection in cokemaking wastewaters.

EPA then eliminated the remaining twenty organic pollutants because controlling phenols (4AAP), benzo(a)pyrene, and naphthalene will effectively control these POCs, too; the chemical structure and physical properties of the regulated pollutants cover the spectrum of non-volatile organics found in cokemaking wastewaters.

12.1.2 Sintering Subcategory

For this final rule, EPA concluded it was inappropriate to revise the pollutants currently regulated in this subcategory. However, it did establish additional limitations and standards for one new pollutant in the wet air pollution control system segment of the sintering subcategory, 2,3,7,8-tetrachlorodibenzofuran (TCDF). The limit for this pollutant is based on the addition of multi-media filtration to the technology basis for the existing BAT/NSPS limitations.

2,3,7,8-TCDF is one of a number of extremely toxic congeners of the dioxin/furan family of compounds. During EPA sampling episodes, several of these congeners were found in both the raw and treated wastewater from sinter plants operating wet air pollution control technologies. EPA decided to use 2,3,7,8-TCDF as an indicator parameter for the whole family of dioxin/furan congeners for several reasons. First, 2,3,7,8-TCDF is the most toxic of the congeners found in treated sintering wastewater. Second, 2,3,7,8-TCDF was the most prevalent of the dioxin/furan congeners in these waste waters. Finally, 2,3,7,8-TCDF is chemically similar to the other dioxin/furan congeners and its removal will similarly indicate removal of the other congeners.

12.1.3 Other Operations Subcategory

The other operations subcategory is comprised of three segments: direct-reduced ironmaking (DRI), forging, and briquetting.

Direct-Reduced Iron Segment BPT, BCT, and NSPS

For the direct-reduced iron (DRI) segment of the other operations subcategory, EPA established BPT, BCT, and NSPS for TSS and pH. The technology basis for these limitations and standards is: solids removal, clarification, high-rate recycle, and filtration of blowdown wastewater. EPA selected TSS because it is a key indicator of the performance of the technology basis. EPA regulated pH because the pH of discharge water is of concern because of its potential impact on the receiving body of water.

The Agency did not regulate any priority or nonconventional pollutants for BPT, BCT, BAT or NSPS. EPA only identified ten pollutants that passed the selection criteria for POCs. These are O&G, TSS, ammonia-N, COD, fluoride, SGT-HEM, aluminum, iron, manganese, and titanium. Of these, EPA eliminated SGT-HEM and COD because they are nonconventional bulk parameters. EPA also eliminated the three treatment chemicals (aluminum, iron, and manganese). EPA eliminated titanium because it was not found in the effluent at any DRI site (see Table 11-1). EPA eliminated fluoride because it is not effectively treated by the technology basis and ammonia-N because it was detected at relative low concentrations in untreated DRI wastewater, 13.9 mg/l. Finally, EPA eliminated O&G because it was no detected at treatable levels at the model facilities.

Forging Segment BPT, BCT, and NSPS

For the forging segment of the other operations subcategory, EPA established BPT, BCT, and NSPS for pH, O&G, and TSS. Based on an analysis of industry provided data, EPA determined that the principal pollutants from forging operations are O&G, TSS, and metals. EPA did not identify any specific priority and nonconventional POCs because EPA lacked data for these pollutants. Contact water and hydraulic system wastewater comprise most of the process wastewater from forging operations. The model technology is comprised of high-rate recycling, oil/water separation, and filtration of blowdown wastewater which effectively controls O&G and TSS for this segment. EPA regulated pH because the pH of discharge water is of concern because of its potential impact on the receiving body of water.

Briquetting Segment BPT, BCT, BAT, and NSPS

For the briquetting segment, EPA established BPT, BCT, BAT, and NSPS. These limitations and standards are: no discharge of process wastewater pollutants.

12.2 Regulated Pollutant Selection Methodology for Indirect Dischargers

Unlike direct dischargers whose wastewater will receive no further treatment once it leaves the facility, indirect dischargers send their wastewater to publicly owned treatment works (POTWs) for further treatment. However, POTWs typically install secondary biological treatment systems that are designed to control conventional pollutants (biochemical oxygen demand (BOD), TSS, O&G, pH, and fecal coliform), the principal parameters in domestic sewage. Except for nutrient control for ammonia and phosphorus, POTWs usually do not install advanced or tertiary treatment technology to control priority and nonconventional pollutants, although secondary biological treatment systems may achieve significant removals for some priority pollutants. Instead, the Clean Water Act envisions that implementation of pretreatment programs and industrial compliance with categorical pretreatment standards will adequately control toxic and nonconventional pollutants in municipal effluents.

Therefore, for indirect dischargers, before establishing national technology-based pretreatment standards, EPA examines whether the pollutants discharged by the industry "pass through" POTWs to waters of the United States or interfere with POTW operations or sludge disposal practices. Generally, to determine if pollutants pass through POTWs, EPA compares the percentage of the pollutant removed by well-operated POTWs achieving secondary treatment with the percentage of the pollutant removed by facilities meeting the BAT effluent limitations. A pollutant is determined to "pass through" POTWs when the median percentage removed by well-operated POTWs is less than the median percentage removed by direct dischargers complying with BAT effluent limitations. In this manner, EPA can ensure that the combined treatment at indirect discharging facilities and POTWs is at least equivalent to that obtained through treatment by direct dischargers.

This approach to the definition of pass-through satisfies two competing objectives set by Congress: (1) that standards for indirect dischargers be equivalent to standards for direct

dischargers, and (2) that the treatment capability and performance of POTWs be recognized and taken into account in regulating the discharge of pollutants from indirect dischargers. Rather than compare the mass or concentration of pollutants discharged by POTWs with the mass or concentration of pollutants discharged by BAT facilities, EPA compares the percentage of the pollutants removed by BAT facilities to the POTW removals. EPA takes this approach because a comparison of the mass or concentration of pollutants in POTW effluents with pollutants in BAT facility effluents would not take into account the mass of pollutants discharged to the POTW from other industrial and non-industrial sources, nor the dilution of the pollutants in the POTW effluent to lower concentrations from the addition of large amounts of other industrial and non-industrial water.

In selecting the regulated pollutants under the pretreatment standards, EPA starts with the priority and nonconventional pollutants regulated for direct dischargers under BAT for each subcategory and submits those pollutants to the pass-through test. Those pollutants that EPA determines pass through POTWs are the pollutants EPA proposes to regulate.

For the final iron and steel rule, EPA revised limitations for metallurgical cokemaking and sintering operations, and codified new limitations for direct-reduced ironmaking, briquetting, and forging. EPA conducted the POTW pass-through analysis for all regulated pollutants for by-product recovery cokemaking. EPA did not conduct its traditional POTW pass-through analysis for non-recovery cokemaking and briquetting because limitations for these operations for direct dischargers consist of no discharge of process wastewater pollutants to waters of the U.S[2]. For sintering, EPA is promulgating new limitations for only one parameter, 2,3,7,8-TCDF, leaving unchanged the existing limitations for all other parameters. Accordingly, EPA's POTW pass-through analysis for sintering is limited to consideration of 2,3,7,8-TCDF. Finally, EPA did not conduct the POTW pass-through analysis for direct-reduced ironmaking and forging because TSS and O&G are the only regulated pollutants for direct dischargers.

The following subsections present the POTW pass-through analysis:

- Methodology for determining BAT percent removals;
- Methodology for determining POTW percent removals; and
- Results of the POTW pass-through analysis.

12.2.1 Methodology for Determining BAT Percent Removals

To calculate BAT percent removals for the final iron and steel rule, EPA started with the same datasets used to calculate the long-term averages (LTAs) for the selected BAT or NSPS technology option. EPA then used the following methodology to calculate the percent removal:

[2]To ensure standards for indirect dischargers be equivalent to limitations for direct dischargers, EPA similarly designates standards for these subcategories and segments as zero discharge.

1) For each pollutant and each site for which EPA had paired influent and effluent data, EPA averaged the influent data and effluent data to give an average influent and effluent concentration, respectively.

2) EPA calculated percent removals for each pollutant for each site from the average influent and effluent concentrations using the following equation:

$$\text{Percent Removal} = \frac{\text{Average Influent Concentration} - \text{Average Effluent Concentration}}{\text{Average Influent Concentration}} \times 100 \qquad (12\text{-}1)$$

3) If EPA calculated percent removals for multiple BAT sites for a pollutant, EPA used the median percent removal for that pollutant from the facility-specific percent removals as the BAT option percent removal.

12.2.2 Methodology for Determining POTW Percent Removals

EPA generally calculated pollutant percent removals at POTWs nationwide from two available data sources:

- Fate of Priority Pollutants in Publicly Owned Treatment Works, September 1982, EPA 440/1-82/303 (50 POTW Study); and
- National Risk Management Research Laboratory (NRMRL) (formerly called the Risk Reduction Engineering Laboratory (RREL) database).

When available for a pollutant, EPA used data from the 50 POTW Study. For those pollutants not covered in the 50 POTW Study, EPA used NRMRL data. The 50 POTW Study presents data on the performance of 50 well-operated POTWs that employ secondary treatment to remove toxic pollutants. EPA edited the data to minimize the possibility that low POTW removals might simply reflect low influent concentrations instead of treatment effectiveness. The criteria used in editing the 50-POTW study data for this rule are listed below (same applicable criteria applied in the Centralized Waste Treatment (CWT) rulemaking):

1) Substitute the standardized pollutant specific analytical ML for values reported as "not detected," "trace," "less than (followed by a number)," or a number less than the standardized ML; and

2) Retain pollutant influent and corresponding effluent values if the average pollutant influent level is greater than or equal to 10 times the pollutant minimum analytical detection limit (ML).

For each POTW that had data pairs that passed the editing criteria, EPA calculated its percent removal for each pollutant using Equation 12-1. EPA then used the median value of

all the POTW pollutant specific percent removals as the nationwide percent removal in its pass-through analysis.

The NRMRL database, used to augment the POTW database for the pollutants that the 50 POTW Study did not cover, is a computerized database that provides information, by pollutant, on removals obtained by various treatment technologies. The database provides the user with the specific data source and the industry from which the wastewater was generated. For each of the pollutants regulated at BAT that were not found in the 50-POTW database, EPA used data from portions of the NRMRL database. EPA applied the following editing criteria (also used by the CWT rulemaking):

1) Only treatment technologies representative of typical POTW secondary treatment operations (activated sludge, activated sludge with filtration, aerated lagoons) were used;

2) Only information pertaining to domestic or industrial wastewater were used;

3) Pilot-scale and full-scale data were used, while bench-scale data were eliminated; and

4) Only data from peer-reviewed journals or government reports were used.

Using the NRMRL pollutant removal data that passed the above criteria, EPA calculated the average percent removal for each pollutant.

For the pollutant 2,3,7,8-TCDF, no data were available in the 50 POTW Study or the NRMRL Treatability Database. For 2,3,7,8-TCDF, the POTW percent removal was transferred from two other dioxin/furan compounds, 1,2,3,4,6,7,8-HPCDD and 1,2,3,4,6,7,8-HPCDF (Reference: Transportation Equipment Cleaning Rulemaking Record (Section 18.4): data source listed as NRMRL Treatability Database).

12.2.3 Results of POTW Pass-Through Analysis

The following subsections provide the results of EPA's pass-through analyses for the by-product recovery cokemaking subcategory.

By-Product Recovery Cokemaking

As explained above, in conducting its traditional pass-through analysis, EPA compares the pollutant's percent removal by direct dischargers complying with BAT to the pollutant's percent removal by well-operated POTWs achieving secondary treatment. Since the technology bases for PSNS and BAT are equivalent, EPA concluded its traditional pass-through analysis is appropriate to use in evaluating PSNS. The following table presents a comparison of

BAT percent removals and POTW percent removals for the by-product recovery segment in the cokemaking subcategory using the methodology described above.

Preliminary POTW Pass-Through Analysis
Cokemaking (By-Product Recovery Segment) - PSNS

Pollutant	BAT % Removal	POTW % Removal (Reference)	BAT% Removal > POTW % Removal?	Does Pollutant Pass Through?
Ammonia-N	98%	39% (a)	Yes	Yes
Benzo(a)pyrene	96%	95% (b)	Yes	Yes
Naphthalene	≥99.9%	95% (a)	Yes	Yes
Phenols (4AAP)	≥99.9%	77% (a)	Yes	Yes
Total Cyanide	99%	70% (a)	Yes	Yes

(a) Source: U.S. EPA's 50 POTW Study, with data editing criteria such that only data pairs (influent and effluent) with influent ≥ 10 x ML were used. (See W-00-25, Section 5.4, DCN IS04612).
(b) Souce: U.S. EPA's NRMRL database. (See W-00-25, Section 5.4, DCN IS04620).

However, for this final rule, EPA has concluded that it is inappropriate for EPA to base its PSES pass-through analysis on the selected BAT technology basis for direct dischargers in this segment. The BAT technology consists of: oil and tar removal, equalization, fixed and free ammonia stripping, heat exchanger, equalization tank, biological treatment with nitrification followed by secondary clarification. The selected PSES technology basis for the final standards (PSES1) is similar to the BAT technology but does not include biological treatment with nitrification and secondary clarification. Because EPA determined the addition of a biological treatment system is not economically achievable for existing indirect dischargers, EPA has concluded that the proper technology basis for the pass-through analysis is the BAT-equivalent for indirects, in this case PSES1. The following table presents a comparison of BAT-equivalent percent removals and POTW percent removals for PSES in the by-product recovery segment in the cokemaking subcategory.

Preliminary POTW Pass-Through Analysis
Cokemaking (By-product Recovery Segment) - PSES

Pollutant	BAT-Equivalent % Removal	POTW % Removal (Reference)	BAT% removal > POTW % Removal?	Does Pollutant Pass Through?
Ammonia-N	76%	39% (a)	Yes	Yes
Benzo(a)pyrene	85.6%	95% (b)	No	No
Naphthalene	99.9%	95% (a)	Yes	Yes

Pollutant	BAT-Equivalent % Removal	POTW % Removal (Reference)	BAT% removal > POTW % Removal?	Does Pollutant Pass Through?
Phenols (4AAP)	25.6%	77% (a)	No	No
Total Cyanide	99.5%	70% (a)	Yes	Yes

(a) Source: U.S. EPA's 50 POTW Study, with data editing criteria such that only data pairs (influent and effluent) with influent ≥ 10 x ML were used. (See W-00-25, Section 5.4, DCN IS04612).
(b) Source: U.S. EPA's NRMRL database. (See W-00-25, Section 5.4, DCN IS04620).

In addition, as described below, EPA concluded its traditional analysis was not appropriate for phenols (4AAP) and ammonia-N discharged to POTWs that nitrify.

Phenols (4AAP) (PSES/PSNS):

Based on the POTW pass-through analysis shown above, EPA would establish PSNS for phenols (4AAP) for the byproducts segment of the cokemaking subcategory. However, for this final rule, as explained in the February 14, 2001 iron and steel notice (66 FR 10257), EPA used an alternate procedure to determine whether or not the phenolic compounds would pass-through for wastewater from by-product recovery cokemaking operations.

This notice explained that EPA planned to determine pass-through for phenol for the cokemaking subcategory using a methodology previously developed for phenol in the Organic Chemicals, Plastics, and Synthetic Fibers (OCPSF) guideline (pages III-6 and 7, and Appendix III-A, May 1993 Supplement to the OCPSF DD [EPA 821-R-93-007]). Under this methodology, EPA determined in the OCPSF rule that phenol did not pass through because phenol is highly biodegradable and is treated by POTWs to the same non-detect levels (10 parts per billion (ppb) or 10 μg/L) that the OCPSF direct dischargers achieve. Like the OCPSF direct dischargers, the cokemaking direct dischargers receive significantly higher influent phenol concentrations than the POTWs, with the result that the direct dischargers showed higher removals than the performance at the POTWs. Consequently, EPA concluded it was appropriate to apply this alternate pass-through methodology for phenolic compounds in by-product recovery cokemaking wastewaters also and accordingly determined that phenols (4AAP) in by-product recovery cokemaking discharges does not pass through.

Ammonia-N (PSES/PSNS):

EPA received many comments concerning its pass-through methodology for ammonia-N. Some commenters noted that many POTWs incorporate nitrification into their operation and that EPA's POTW percent removal estimates where not representative of those types of operations. EPA agrees and had concluded that ammonia-N discharges in iron and steel wastewaters do not pass-through POTWs that nitrify. EPA is defining nitrification capability as described in the following paragraph.

POTWs with nitrification capability oxidize ammonium salts to nitrites (via Nitrosomas bacteria) and then further oxidize nitrites to nitrates via Nitrobacter bacteria to achieve greater removals of ammonia than POTWs without nitrification. Nitrification can be accomplished in either a single or two-stage activated sludge system. In addition, POTWs that have wetlands which are developed and maintained for the express purpose of removing ammonia with a marsh/pond configuration are also examples of having nitrification capability. Indicators of nitrification capability are: (1) biological monitoring for ammonia oxidizing bacteria (AOB) and nitrite oxidizing bacteria (NOB) to determine if the nitrification is occurring, and (2) analysis of the nitrogen balance to determine if nitrifying bacteria reduce the amount of ammonia and increase the amount of nitrite and nitrate.

Final Pass-Through Analysis for By-Product Recovery Cokemaking:

The following table lists the final determination for the POTW pass-through analysis in the by-product recovery cokemaking segment for existing and new indirect dischargers.

Final POTW Pass-Through Analysis
Cokemaking (By-Product Recovery Segment) - PSES/PSNS

Pollutant	Does Pollutant Pass Through-PSES?	Does Pollutant Pass Through-PSNS?
Ammonia-N	Yes (a)	Yes (a)
Benzo(a)pyrene	No	Yes
Naphthalene	Yes	Yes
Phenols (4AAP)	No	No
Total Cyanide	Yes	Yes

(a) EPA determined ammonia-N does not pass through POTWs that nitrify.

Sintering

The following table presents a comparison of BAT percent removals and POTW percent removals for the wet air pollution control system segment of the sintering subcategory using the traditional methodology described above.

POTW Pass-Through Analysis
Sintering Subcategory - PSES/PSNS

Pollutant	BAT % Removal	POTW % Removal (Reference)	Does Pollutant Pass Through?
2,3,7,8-TCDF	99 %	83 % (a)	Yes

(a) POTW% removal assumed to be equivalent to the percent removal for 1,2,3,4,6,7,8-HPCDD and 1,2,3,4,6,7,8-HPCDF (Reference: NRMRL Treatability Database).

Table 12-1

Pollutants Considered for Regulation for Direct Dischargers Cokemaking Subcategory - By-Product Recovery Segment

Pollutant Group	Pollutant of Concern	Bulk Parameter	Volatile Parameter	Treatment Chemical	Not Detected at Treatable Levels	Not Effectively or Constantly Treated	Controlled Through Regulation of Another Parameter
Conventional pollutants	Biochemical oxygen demand 5-day (BOD_5)						✔
	Biochemical oxygen demand 5-day (BOD_5) - carbonaceous						✔
	Oil and grease measured as hexane extractable material (O&G)						✔ (b)
	Total suspended solids (TSS)						✔ (b)
Nonconventional pollutants, other (a)	Amenable cyanide						✔
	Ammonia as nitrogen (ammonia-N)						
	Chemical oxygen demand (COD)	✔					
	Fluoride			✔			
	Nitrate/nitrite	✔				✔	
	Phenols (4AAP)	✔ (c)					
	Thiocyanate					✔	
	Total petroleum hydrocarbons measured as silica gel treated hexane extractable material (SGT-HEM)	✔			✔		
	Total Kjeldahl nitrogen (TKN)	✔					
	Total organic carbon (TOC)	✔					
	Weak acid dissociable (WAD) cyanide						✔

Table 12-1 (Continued)

Pollutant Group	Pollutant of Concern	Bulk Parameter	Volatile Parameter	Treatment Chemical	Not Detected at Treatable Levels	Not Effectively or Constantly Treated	Controlled Through Regulation of Another Parameter
Priority metals	Arsenic				✔		
	Mercury					✔	
	Selenium					✔	
Nonconventional metals	Boron			✔	✔		
Priority organic pollutants	Acenaphthene						✔
	Acenaphthylene						✔
	Anthracene						✔
	Benzene		✔				✔
	Benzidine				✔		
	Benzo(a)anthracene						✔
	Benzo(a)pyrene						
	Benzo(b)fluoranthene						✔
	Benzo(k)fluoranthene				✔		
	Benzo(ghi)perylene				✔		
	Chrysene						✔
	1,2-Dichloroethane		✔		✔		
	2,4-Dimethylphenol						✔
	Ethylbenzene		✔		✔		
	Fluoranthene						✔
	Fluorene						✔
	Indeno(1,2,3-cd)pyrene				✔		

Table 12-1 (Continued)

Pollutant Group	Pollutant of Concern	Bulk Parameter	Volatile Parameter	Treatment Chemical	Not Detected at Treatable Levels	Not Effectively or Constantly Treated	Controlled Through Regulation of Another Parameter
Priority organic pollutants (continued)	Naphthalene		✔				
	Phenanthrene		✔				✔
	Phenol						✔
	Pyrene						✔
	Toluene		✔				✔
Nonconventional organic constituents	Aniline		✔				✔
	2,3-Benzofluorene		✔		✔		
	beta-Naphthylamine				✔		✔
	Biphenyl		✔		✔		
	2-Butanone				✔		
	Carbazole						✔
	Carbon disulfide		✔		✔		
	Dibenzofuran		✔				✔
	Dibenzothiophene		✔				✔
	4,5-Methylene phenanthrene						✔
	2-Methylnaphthalene		✔				✔
	1-Methylphenanthrene		✔		✔		
	m- + p-Xylene		✔				✔
	m-Xylene		✔				✔
	1-Naphthylamine				✔		✔
	n-Eicosane		✔				✔

Table 12-1 (Continued)

Pollutant Group	Pollutant of Concern	Bulk Parameter	Volatile Parameter	Treatment Chemical	Not Detected at Treatable Levels	Not Effectively or Constantly Treated	Controlled Through Regulation of Another Parameter
Nonconventional organic constituents (continued)	n-Hexadecane		✔				✔
	n-Octadecane		✔				✔
	o-Cresol						✔
	o- + p-Xylene		✔				✔
	o-Toluidine				✔		
	o-Xylene		✔				✔
	p-Cresol						✔
	Perylene				✔		
	2-Phenylnaphthalene		✔				✔
	2-Picoline						✔
	2-Propanone						✔
	Pyridine						✔
	Styrene		✔				✔
	Thianaphthene						✔
Other priority pollutant	Total cyanide						

(a) Nonconventional pollutants other than nonconventional metals and nonconventional organic pollutants.
(b) Already regulated for existing dischargers.
(c) EPA regulated phenols (4AAP) also referred to as total phenols as an indicator of the compounds phenol and 2,4-dimethylphenol.

Table 12-2

Henry's Law Constants for Organic Pollutants of Concern Cokemaking Subcategory - By-Product Recovery Segment

Pollutant	Henry's Law Constant (atm · m^3/mol) (a)	Volatile Parameter?
1,2-Dichloroethane	9.14E-04	Y
1-Methylphenanthrene	> 1E-04	Y
2,3-Benzofluorene	> 1E-04	Y
2,4-Dimethylphenol	1.70E-05	
2-Methylnaphthalene	7.98E-04	Y
2-Phenylnaphthalene	> 1E-04	Y
2-Picoline	(b)	
4,5-Methylene Phenanthrene	(b)	
Acenaphthene	9.10E-05	
Acenaphthylene	(b)	
Acetone	2.10E-05	
alpha-Naphthylamine	1.11E-07	
Aniline	> 1E-04	Y
Anthracene	8.60E-05	
Benzene	5.55E-03	Y
Benzidine	3.88E-11	
Benzo(a)anthracene	1.00E-06	
Benzo(a)pyrene	4.90E-07	
Benzo(b)fluoranthene	1.22E-05	
Benzo(ghi)perylene	3.31E-07	
Benzo(k)fluoranthene	3.87E-05	
beta-Naphthylamine	(b)	
Biphenyl	4.80E-04	Y
Carbazole	<E-04	
Carbon Disulfide	1.20E-02	Y
Chrysene	1.50E-06	

Table 12-2 (Continued)

Pollutant	Henry's Law Constant (atm · m^3/mol) (a)	Volatile Parameter?
Dibenzofuran	> 1E-04	Y
Dibenzothiophene	4.40E-04	Y
Ethylbenzene	6.60E-03	Y
Fluoranthene	6.50E-06	
Fluorene	6.40E-05	
Indeno(1,2,3-cd)pyrene	1.60E-06	
m- + p-Xylene	7.00E-03	Y
m-Xylene	7.18E-03	Y
Methyl Ethyl Ketone	2.70E-05	
n-Eicosane	> 1E-04	Y
n-Hexadecane	> 1E-04	Y
n-Octadecane	> 1E-04	Y
Naphthalene	4.60E-04	Y
o- + p-Xylene	7.00E-03	Y
o-Cresol	1.60E-06	
o-Toluidine	1.98E-06	
o-Xylene	7.00E-03	Y
p-Cresol	1.00E-06	
Perylene	3.65E-06	
Phenanthrene	2.26E-04	Y
Phenol	4.54E-07	
Pyrene	5.10E-06	
Pyridine	2.10E-06	
Styrene	2.80E-03	Y
Thianaphthene	(b)	
Toluene	6.66E-03	Y

(a) Henry's Law Constants were obtained from the Development Document for the CWT Point Source Category.
(b) Volatility information not available.

SECTION 13

PRODUCTION-NORMALIZED FLOWS

This section describes the data sources and methodology EPA used to select the model production-normalized flows (PNFs) that EPA used to calculate the limitations and standards considered for the final rule. EPA considered good water management practices and decreased wastewater discharge volumes, which it considers to be key components of effective pollution control, in its selection of the model PNFs. Section 13.1 briefly describes the data sources (Section 3 discusses this in more detail) and gives a general overview of EPA's evaluation and selection of facility datasets that are the basis for selection of the model PNFs. Section 13.2 provides a general overview of EPA's selection of the model PNFs. Sections 13.3 through 13.9 provide detailed discussions of EPA's determination of the model PNFs for each subcategory. Table 13-1 summarizes the model PNFs selected for each subcategory.

13.1 Overview of Data Selection

To develop the PNFs, EPA used wastewater flow and production data reported by facilities in response to industry surveys. Specifically, EPA used 1997 wastewater discharge flow and production data reported for each manufacturing process (e.g., cokemaking, hot forming, surface coating). In the case of cokemaking, manufacturing process flow data were also supplemented by reported treatment system effluent flow data.

EPA expressed the PNFs in terms of gallons of wastewater discharged per ton of production (gpt) for all production operations. EPA normalized reported wastewater discharge flow rates by production because this allows direct comparison of wastewater discharge flow rates among facilities regardless of facility size. However, for certain wet air pollution control devices associated with steel finishing operations, EPA expressed PNFs in gallons per minute (gpm) since they are independent of production.

Except as noted, EPA used flow and production data reported by all facilities without editing or screening the data. The exceptions include data from a few facilities for a few operations where information was insufficient (i.e., incomplete) to calculate PNFs.

EPA used the industry survey data to identify every source of process wastewater generated by a manufacturing operation. EPA did not include non-process wastewater sources in calculating site-specific PNFs for the following reasons: (1) EPA calculated the amount of wastewater directly generated from manufacturing operations that displayed wastewater characteristics requiring treatment, and (2) non-process wastewater does not directly contact processed or raw materials as part of the manufacturing operations, and often does not need treatment. The largest source of non-process wastewater is noncontact cooling water, but other sources include storm water and ground water. The exception is non-process wastewater that enters the process wastewater systems as makeup water, is reused as process water, incorporated into the process water system, and captured in the process wastewater discharge flows. EPA supports reusing of noncontact cooling water and other non-process wastewater to reduce fresh

water requirements in process operations. Accordingly, EPA included these flows in determining the site-specific PNFs. In developing the model PNFs, EPA did not consider noncontact cooling water and other non-process wastewaters that are commingled with process wastewater. The decision not to use these non-process wastewaters is consistent with EPA's past practice and with the implementation of effluent limitations in permits and pretreatment control mechanisms.

EPA recognizes that storm water, ground water, and certain other non-process wastewaters from iron and steel sites can become contaminated with a variety of pollutants from raw materials and finished products and may require treatment before discharge. Consequently, EPA provided §420.08 in the final regulation, which allows permitting authorities to provide for increased loadings for non-process wastewater defined in §420.02 in NPDES permits and pretreatment control mechanisms using best professional judgement (BPT), but only to the extent such non-process wastewaters result in an increased flow.

Some sites achieve zero discharge of process wastewater from all manufacturing operations by evaporation or contract hauling. In these cases, EPA did not use a PNF of zero, but rather used the wastewater blowdown rates reported by these facilities for each manufacturing process (e.g., vacuum degassing, casting, and hot forming). EPA changed its methodology after proposal in response to comments. EPA developed this methodology to ensure that the selected regulatory PNFs generally would not be based on evaporation or contract hauling of process wastewater. Other sites achieve zero discharge from a particular manufacturing process by using wastewater as process makeup water for other processes. In these cases (with a few exceptions described below), EPA did not assign a PNF of zero, but instead used the volume of blowdown water from these operations in its PNF analysis. This methodology is consistent with that used by EPA at proposal.

For certain manufacturing operations, such as acid pickling and alkaline cleaning, contract hauling of wastewater streams (e.g., spent pickling or cleaning solutions) is common practice and was considered by EPA in its PNF analysis. In these cases, including wastewater sources that are not discharged in the analysis would result in a high bias of regulatory PNFs. EPA did not want to develop a flow allowance in the effluent limitations for process wastewater streams that are seldom, if ever, discharged. Additionally, for certain manufacturing operations such as acid pickling and alkaline cleaning, reusing wastewater streams within the same finishing line is common practice, and EPA considered this practice in its PNF analysis. For example, pickling rinsewater may be reused as pickling bath makeup water or returned to the process bath. EPA did not want to double count the portion of rinsewater that is reused in its PNF analysis; therefore, the Agency did not include this recycle water in its calculation of the finishing PNFs. Note that these practices generally pertain to only a small portion of acid pickling and alkaline cleaning wastewater discharges.

13.2 Overview of PNF Selection

This section describes the general methodology EPA used to select the model PNFs. For each process operation, EPA first performed an engineering assessment of all available wastewater discharge data for all sites in each subcategory or segment and initially

determined the model PNFs based on the best performing mills within a given subcategory or segment. EPA generally considered model PNFs that are currently achieved by a minimum of 30 percent of facilities as a reasonable initial assessment of the best performers. Next, EPA assessed whether all facilities within any given segment can achieve the selected PNFs. For this assessment, EPA considered a variety of factors that may affect the ability of facilities to achieve the model PNFs, such as type of process used, products produced, age of equipment and facilities, geographic location, size, and non-water quality environmental impacts. EPA also considered combinations of these factors and evaluated the pollutant control upgrades that EPA judged would be necessary for facilities to attain the model PNFs. In addition, EPA considered whether any individual facilities achieve the model PNFs and long-term averages (LTAs) simultaneously (development of the model LTAs is described in Section 14), but did not include this factor as a requirement in determining the model LTAs and PNFs. EPA adjusted its initial determination of the model PNFs as necessary based on this assessment.

In response to comments on the proposed rule, EPA also evaluated the effect of seasonal variation on PNFs. Monthly production and daily flow data were available for five sites, including four integrated steelmaking sites and one stand-alone finishing site. EPA did not observe a consistent relationship between season and water use. Although factors such as water system operation and control, product variations, type of product, maintenance schedules, and storm-water volumes may mask any association between season and water use, it is more likely that there is no seasonal variation for these processes.

EPA's methodology for selecting the model PNFs independent from the model LTAs is very similar to that used for the 1982 rule (and for many other rules developed for other industrial point source categories) and is reasonable. Comments submitted on the proposed rule suggested alternative approaches to determine the model PNFs, such as use of various statistical analyses. However, the results of the commenter's statistical analysis demonstrate that adopting such an approach would generate unreasonably high PNFs that are not technology-based (i.e., do not represent the best available technology) and do not consider other factors required by the CWA. (See EPA's response to comments submitted by the Steel Manufacturer's Association, DCN IS10230, comment excerpts 2 and 12). Therefore, EPA disagrees with commenters that a statistical analysis is the best methodology to develop the model PNFs and has retained the methodology described above.

13.3 Subpart A: Cokemaking Subcategory

The cokemaking subcategory includes two segments: by-product recovery cokemaking and non-recovery cokemaking. EPA evaluated wastewater discharge flow rates separately for each segment as described in the following subsections.

13.3.1 By-Product Recovery Cokemaking

EPA analyzed industry survey responses for 23 sites that generate process wastewater (14 stand-alone by-product recovery coke plants and 9 by-product recovery coke plants at integrated mills) to develop the model PNF. One site is a zero discharger; this site

disposes of its wastewater by a combination of coke quenching and deep-well injection. The Agency evaluated these 23 sites to develop a profile of the wastewater generated at by-product recovery cokemaking facilities.

By-product recovery coke plants generate a variety of process wastewater streams as described in detail in Section 7.1.1. As a starting point for developing the model PNF for the final rule, EPA considered the model PNF developed for the 1982 rule. EPA's approach for the 1982 rule in developing the model PNF was to first evaluate PNFs for each of the component flows listed in the table below. See Volume II of the 1982 Development Document (Reference 13-1). The sum of those component PNFs formed the base BAT PNF of 103 gpt for plants without biological treatment (i.e., most indirect discharge plans and one direct discharge plan); and 153 gpt for plants with biological treatment. The production basis was tons of coke produced and did not consider coke breeze production. For most coke plants, survey responses for the 1982 regulation provided sufficient detail on component flows to permit detailed assessments of each component flow.

Process Wastewater Flow Component	**1982 Regulation**		**2002 Final Rule**
Base flows applicable to all plants	Iron & Steel	Merchant	All coke plants
Waste ammonia liquor	32	36	32
Crude light oil recovery	25	28	25
Final gas cooler condensate	10	12	10
Coke oven gas condensate	Not considered	Not considered	3
Barometric condenser blowdown	3	5	3
Steam/caustic for ammonia still	13	15	10
Miscellaneous	20	24	20
NESHAPs controls	Not considered	Not considered	10
Base flow	103	120	113
Control water - biotreatment	50	50	50
Base flow with control water	153	170	163
Optional flows up to maximum amounts shown			
Wet coke oven gas desulfurization	25	25	15
Indirect ammonia recovery	60	60	NA
Unregulated WAPC flows	Not considered	Not considered	Design basis
Coke plant ground-water remediation	Not considered	Not considered	Design basis
Process area storm water	Not considered	Not considered	Design basis

Next, EPA assessed the 1997 survey data for each of the component flows to determine whether 1982 PNFs were still applicable and achievable. The results of this assessment are summarized here, and detailed support documentation is located in the Iron and Steel Administrative Record (Section 14.1, DCN IS10362 and Section 14.1, DCN IS10824 in the rulemaking record). Note that, for this assessment, EPA used a revised production basis of tons of coke plus coke breeze produced. Coke breeze production ranges widely from 1.3 percent to 7.9 percent of total production for furnace coke producers and 5.6 percent to 8.9 percent for foundry coke producers. Consequently, EPA believes that total production measured as coke plus coke breeze provides a more representative and more comparable measure of total coke produced. Based on this reassessment, EPA found no basis for revising many of the component flows. For other component flows, EPA considered whether current reported flow rates warranted development of revised component PNFs.

A principal limitation of the 1997 survey data centered around reported waste ammonia liquor flows. Waste ammonia liquor represents the moisture in the coal charged to the coke ovens, generally 7 percent to 9 percent by weight. Unlike other coke plant process wastewaters and process wastewaters from other iron and steel operations, waste ammonia liquor is a flow derived from the raw material. Many coke producers reported the total of their ammonia still effluent flows as waste ammonia liquor. Waste ammonia liquor flow rates reported in response to the 1997 industry survey ranges from 26 to 270 gpt, with a median flow rate of 69 gpt. Where data were reported for coal charged and coal moisture, EPA estimated waste ammonia liquor flows based on reported coal moisture data (Section 14.1, DCN IS10882 in the rulemaking record). Such data was reported for 6 coke facilities. These results are comparable to those reported in the 1982 Development Document, and are considerably less than the waste ammonia liquor flows reported in the 1997 survey without consideration of coal moisture data. Taking into consideration coal moisture data, EPA decided to retain the waste ammonia liquor PNF from the 1982 rule, 32 gpt, for the final rule.

EPA's assessment of the 1997 industry survey data also supported retaining the following additional 1982 component flows: 25 gpt for crude light oil recovery, 10 gpt for final gas cooler condensate, 3 gpt for barometric condenser condensate, and 20 gpt for miscellaneous flows.

EPA developed an additional component flow of 3 gpt for coke oven gas condensates, which was not considered in 1982. This represents the average reported flow for coke oven gas condensates. This additional flow allowance was offset by a reduction of 3 gpt in the flow for ammonia still steam and caustic based on 1997 industry survey data. The 1982 flow allowance for ammonia still steam and caustic was 13 gpt. The average flow reported in 1997 for caustic solution from ammonia stills was less than 1 gpt, while the average flow reported in 1997 for steam condensate from ammonia stills was 9 gpt. Thus, EPA selected an allowance of 10 gpt for ammonia still steam and caustic. Finally, EPA developed an additional component flow of 10 gpt for NESHAPs control water, which was not considered in 1982. This represents both the median and the average reported flow for NESHAPs control water.

EPA retained the 1982 rate of 50 gpt for control water used in optimizing coke plant biological treatment systems. This control water allowance is based on control water use reported by several plants, including one of the sites that operates model BAT wastewater treatment. EPA compared the PNFs achieved by sites with and without biological treatment, which demonstrated that sites with biological treatment use more water, in the form of control water. Accordingly, as described in the February 14, 2001 Notice of Data Availability (66 FR 10253), EPA has removed the control water flow allowance from the base PNF. Instead, EPA provided this additional flow allowance only to those plants that operate coke plant biological treatment systems. This change will result in more stringent limitations applicable to by-product recovery coke plants that do not operate coke plant biological treatment systems.

The net result of EPA's assessment was a revision of the base PNF from 103 gpt to 113 gpt (excluding control water). This represents an increase of 10 gpt from the 1982 flows; however, considering that the production basis for these PNFs includes both coke and coke breeze, these PNFs represent a slightly greater increase in absolute flow than 10 gpt.

The final rule also provides additional flow allowances of 50 gpt for control water for operation of biological treatment (described above), 15 gpt for wet coke oven gas desulfurization systems (revised from 25 gpt provided in the 1982 rule), and permit writer-derived flows for other wet air pollution control systems (except those from coal charging and coke pushing emission controls), coke plant groundwater remediation systems, and storm water from the immediate process area. EPA's revision of the flow allowance for wet coke oven gas desulfurization is based on EPA's assessment of flow rates reported in the 1997 survey response. The average reported flow rate for wet coke oven gas desulfurization was 15 gpt. The final rule does not provide a flow allowance for indirect ammonia recovery, which was considered in the 1982 rule, because this technology is no longer used.

EPA had proposed to increase the base PNF by 5 gpt to provide an allowance for process area storm water. For the final rule in response to comments, EPA has changed the method of accounting for process area storm water to better address the variability in storm water management practices at coke plants and allow for expected future increases in treating storm water from process areas. Specifically, EPA removed the 5 gpt stormwater flow allowance and instead provided a provision at §420.07(d) to allow permit writers to determine a more accurate allowance for storm water based on each site individually. Section 17 provides guidance to permit writers on providing reasonable stormwater allowances.

EPA excluded from its PNF analysis wastewater generated from wet air pollution control (WAPC) devices used to control emissions from operations such as coal charging, coke pushing, and by-product recovery. For WAPC wastewaters from coal charging and coke pushing, standard industry practice is to dispose of these wastewaters by coke quenching. The Agency supports this practice because these WAPC wastewaters, unlike some other untreated process wastewaters, do not contain volatile pollutants. Only two sites generate by-product WAPC wastewaters; therefore, EPA did not include this flow in its determination of the base PNF for the entire industry segment.

Finally, EPA performed a comprehensive assessment to determine whether any factors would prevent a facility from achieving the selected PNF. EPA included the factors listed in the CWA and others identified by proposal commenters. These factors are process, age of equipment and facilities, location, size, and non-water quality environmental impacts such as energy. Each is discussed in more detail below.

Process - Two types of coke are produced at by-product recovery cokemaking sites: blast furnace coke and foundry coke, with foundry coke requiring a longer coking time. The cokemaking plants are also either stand-alone or collocated with integrated iron and steel mills. All coke plant types (i.e., furnace, foundry, stand-alone, and collocated) are demonstrated to achieve the PNF performance level.

EPA also did not identify any basis to distinguish between merchant (i.e., stand-alone) coke producers and integrated coke facilities. Although merchant coke producers are smaller and produce less coke, this difference is accounted for in the calculation of a production-normalized flow. Furthermore, EPA's analysis shows that some merchant coke producers achieve the model PNF, demonstrating that the model PNFs are achievable.

Age of equipment and facilities involved - One site began battery operations in 1903 and 1913 and has not had a major rebuild since then. This site's PNF is more than double the PNF performance level. This plant is unique because of its obvious antiquated operation and control equipment as observed during engineering site visits. However, EPA determined that these antiquated systems do not preclude the plant from achieving the PNF performance level. This site should be able to meet the PNF with tighter operation practices and repairs to the system. EPA considered the costs required for this site to achieve PNF performance level in its analyses for the final rule.

Otherwise, sites without biological treatment that achieve the 113-gpt performance level and sites with biological treatment that achieve the 163-gpt performance level include both the oldest and the newest systems.

Location - EPA compared cokemaking site location to performance. Sites without biological treatment that achieve the 113-gpt performance level and sites with biological treatment that achieve 163 gpt are located in a variety of areas, including arid and semi-arid regions and northern and southern regions.

Size - EPA compared cokemaking production to performance. Sites without biological treatment that achieve 113 gpt and sites with biological treatment that achieve 163 gpt include both the largest and smallest sites.

Non-water quality environmental impacts, including energy - Non-water quality environmental impacts are not a significant consideration for cokemaking. Because the model PNF has been largely retained from the 1982 rule, any impacts have already occurred. The incremental non-water quality environmental impacts and energy consumption associated with achieving the model PNF are minimal. One plant that was believed to have limitations on

cooling tower operations was determined to have no limits or restrictions for cooling tower air emissions.

Finally, EPA considered whether any of the cokemaking sites whose wastewater treatment performance data were used to develop the model LTAs achieve the model PNF. All three BAT treatment technology sites meet the model PNF.

13.3.2 Non-Recovery Cokemaking

EPA analyzed industry survey responses for two stand-alone non-recovery coke plants; one of these plants began operations after 1997, but was used in the flow rate analysis to increase the dataset. Section 7.1.1 describes water use and wastewater generation at non-recovery coke plants. Neither site generates process wastewater related to cokemaking, other than boiler blowdown and process area storm water, which are typically disposed of by coke quenching. Therefore, EPA has designated non-recovery cokemaking as a zero discharge operation.

13.4 Subpart B: Ironmaking Subcategory

The proposed ironmaking subcategory has three segments: sintering with wet air pollution controls, sintering with dry air pollution controls, and blast furnace ironmaking. EPA evaluated wastewater discharge flow rates separately for each segment as described in the following subsections. The results of this evaluation are summarized here, and detailed support documentation is located in the Iron and Steel Administrative Record (Section 14.1, DCN IS10359 and Section 14.1, DCN IS10824 in the rulemaking record). Note that, for the final rule, EPA decided to retain the subcategorization structure from the 1982 rule, which includes separate subcategories for sintering and ironmaking operations. Except for sintering, the final rule retains the limitations and standards from the 1982 rule. EPA promulgated a new limitation for 2,3,7,8-tetrachlorodibenzofuran for sintering operations with wet air pollution controls. This section describes the model PNFs that EPA developed for technology options considered for the final rule, but ultimately rejected.

13.4.1 Sintering With Wet Air Pollution Controls

EPA analyzed industry survey responses for six sintering plants with WAPC in operation in 1997 to develop the model PNF considered for the final rule for this industry segment. Of these six sintering plants, one plant has since changed to dry air pollution control and another plant has shut down. Of the four remaining plants, three cotreat sintering wastewater with blast furnace wastewater, and one cotreats sintering wastewater with other steelmaking wastewaters.

The primary process wastewater source for sintering operations is WAPC system wastewater, and EPA considered reported WAPC discharge flow rates to determine the model PNF. Facilities identified other sources of sintering wastewater in the 1997 survey, including sinter cooling water, belt sprays, and equipment cleaning water. The Agency believes these

wastewaters are discharged with the WAPC blowdown because respondents did not provide flow rate data for these sources.

Review of the dataset suggests three possible model PNFs: 7, 75, and 110 gpt. These correspond to recycle rates of 99.6 percent, 96.9 percent, and 90.3 percent, respectively. EPA rejected a PNF of 7 gpt because of substantial costs required to achieve this performance level and concerns whether all plants could achieve this. However, a PNF of 110 gpt does not represent the greatly improved performance achieved by sinter plants since the 1982 regulation. Therefore, EPA initially considered 75 gpt as the model PNF for three reasons. First, the performance level is representative of well-operated, high-rate recycle systems. Second, the performance level represents a significant improvement in performance from the current regulation. Third, a significant portion of the plants operating in 1997, two of the six plants or 33 percent, achieve the performance level, suggesting it is demonstrated and achievable. Of the plants that achieve the performance level, one is stand-alone and one is a combined wastewater treater.

Next, EPA assessed the following factors to determine whether any suggested that a model PNF of 75 gpt is not technically achievable.

Process - The two plants used to select the model PNF are representative of other sinter operations in that they generate wastewater from emissions control from the windbox and other sources typical of sinter plants operating WAPC systems. EPA did not receive any comments on the proposed rule suggesting that sintering process considerations affect the technical achievability of the model PNF, nor is it aware of any such considerations that would impact the technical achievability of the model PNF.

Age of equipment and facilities involved - Review of the dataset indicates that age is not a significant factor in selecting a model PNF. All of the plants began operations within 30 years of each other. Of the two plants that achieve the model PNF, one is among the oldest plants and the other is not. Thus, age is not considered a significant factor for selecting a PNF for sintering.

Location - Sinter plants are located predominantly in the midwestern part of the country, with one located in the east. The two plants that achieve the model PNF are both located in the Midwest. However, EPA did not collect, nor did industry provide, any information or data that indicates location is a significant factor in selecting a PNF.

Size - EPA compared sinter plant production to performance. Sites achieving the model PNF of 75 gpt include both the largest and smallest sites.

Non-water quality environmental impacts, including energy - Non-water quality environmental impacts related to high-rate recycle systems are not a significant consideration for sintering. Because the wastewater discharged from sintering operations makes up such a small portion of the wastewater discharged at sites with sintering, any incremental non-water quality costs associated with increasing recycle rates at these sites are minimal.

Finally, EPA considered whether the plant whose wastewater treatment performance data were used to develop the model LTAs achieves the model PNF or operates a high-rate recycle system. The plant does not achieve the model PNF, but does operate a high-rate recycle system (operated at less than capacity). Current NPDES permits issued under the 1982 regulation do not require optimization of recycle systems and minimizing blowdown rates to the level considered by EPA for the final rule. Although EPA considers the model PNF to be demonstrated and achievable by all plants, several plants do not achieve the model PNF and have had no incentive to do so.

13.4.2 Sintering With Dry Air Pollution Controls

EPA analyzed industry survey responses for two sinter plants; one of these plants converted from wet to dry air pollution controls after 1997, but completed their survey response based on the revised process. Neither plant reported generating any process wastewater; therefore, EPA has designated sintering with dry air pollution controls as a zero discharge operation.

13.4.3 Blast Furnace Ironmaking

EPA analyzed industry survey responses for each blast furnace wastewater treatment system in operation in 1997 to develop the ironmaking model PNF considered by EPA for the final rule. Depending on the site, these systems treat wastewater from one or more blast furnaces; some sites operate more than one ironmaking wastewater treatment system. EPA calculated and evaluated PNFs for a total of 24 wastewater treatment systems servicing a total of 41 blast furnaces. One furnace was not in operation in 1997 and was not included in the PNF analysis.

Blast furnaces generate a variety of process wastewater streams, as described in detail in Section 7.1.2. Blowdown from the high-energy scrubbers and gas coolers are the primary wastewater source from blast furnace ironmaking, and common industry practice is to reuse other ironmaking process wastewaters as makeup for the gas cleaning system. Accordingly, EPA developed the model PNF considered for the final rule for ironmaking based on reported gas cleaning system blowdown rates.

To facilitate review of this relatively large dataset, EPA plotted the PNF of each blast furnace water system against its PNF and percent recycle. Based on a review of the plot, EPA considered 25 gpt, which corresponds to a recycle rate of approximately 98 percent or greater, as an initial determination of the model PNF. EPA had three reasons for this. First, the performance level is representative of well-operated, high-rate recycle systems. Second, the performance level represents a significant improvement in performance from the current regulation. Third, a significant portion of the blast furnace water systems operating in 1997, 8 of the 24 systems operating in 1997 or 33 percent, achieve the performance level, suggesting it is demonstrated and achievable.

Note that six ironmaking wastewater treatment systems achieve zero discharge and four ironmaking wastewater treatment systems achieve reduced discharge of blast furnace wastewater by using all or a portion of gas cleaning blowdown for slag quenching. One additional system achieves zero discharge by discharging gas cleaning blowdown to one unlined and one synthetically lined pond where the wastewater infiltrates the ground and evaporates. The Agency did not consider selecting a model PNF based on zero discharge because it does not believe that the practice of using untreated gas cleaning blowdown for slag quenching in unlined slag pits constitutes BAT, because this practice can cause ground-water contamination and air pollution.

Next, EPA assessed the following factors to determine whether any suggested that a model PNF of 25 gpt is not technically achievable.

Process - Since promulgation of the 1982 regulation, there have been many advances in blast furnace operations, most of which are associated with use of supplemental carbonaceous fuels to replace a portion of the coke charge and other injectants. The principal process difference among blast furnaces is raw materials used, which is influenced by many factors including size (and age) of the furnace, availability of sinter, and changes in prices for natural gas and other injectants such as pulverized and granulated coal.

Representatives from Ispat-Inland Steel commented during EPA/industry meetings subsequent to proposal that using pulverized coal injection (PCI) at Ispat-Inland's No. 7 furnace has led to severe corrosion in the Bischoff scrubber used for gas cleaning. Operators have had to increase the blowdown rate from 43 gpt in 1997 to approximately 70 gpt to control high chloride levels and minimize corrosion.

Based on this comment, EPA evaluated the reported injection rates for pulverized and granulated coal (PCI/GCI) in 1997. All but two sites with furnaces using PCI/GCI reported PNFs at or below 70 gpt in 1997. One of these sites operates a high-rate recycle system that is not optimized for minimal blowdown, and the second site does not have a high-rate recycle system. Two sites using PCI/GCI reported PNFs below 25 gpt.

To obtain additional information to further evaluate the potential impact of PCI/GCI on the achievability of the model PNF, EPA contacted representatives of Ispat-Inland Steel, Bethlehem Steel, and U.S. Steel to review current blast furnace operations and operating practices to minimize corrosion in blast furnace treatment and recycle systems. Contact reports are included in the Iron and Steel Administrative Record (Section 14.1, DCN IS10359 in the rulemaking record). The review focused on furnaces using PCI; the objective was to collect information to help determine appropriate blowdown rates for blast furnace operations using PCI/GCI.

Site personnel provided detailed descriptions and supporting data demonstrating that corrosion has become a significant issue with using PCI to increase furnace productivity. Site contacts indicated that it is likely that PCI use as a coke substitute will increase in the future, thus increasing the concentrations of chlorides and the potential for corrosion. Increased use of

PCI at any size furnace may become more attractive during periods when natural gas prices are high. Furnace operators report that chloride concentrations in the range of 1,500 to 2,000 mg/L are tolerable with increased treatment of the recirculating water with corrosion inhibitors. Site personnel indicated that this range can be maintained with the model PNF of 70 gpt developed for the 1982 rule.

Commenters also indicated that blast furnaces operating with high top pressures (generally greater than 20 psig) would not be able to meet the model PNF. Consequently, EPA evaluated the relationship between blast furnace top pressure and PNF and found a correlation between the two. Four blast furnace systems that operate with high top pressures do not achieve the model PNF. These four furnaces are the newest, largest furnaces in operation; they all also use PCI. Therefore, consideration of PCI in selecting a model PNF coincidentally addresses possible issues related to high top pressures and the technical achievability of the model PNF.

Finally, commenters discussed the impact of high-rate recycle on wastewater total dissolved solids (TDS) concentrations and resulting scaling of equipment. Industry attendees at the EPA/Industry meeting on April 24, 2001 mentioned studies that were performed to evaluate scaling issues. EPA requested copies of these studies, but the reports were not provided to the Agency. During the meeting, attendees indicated that a blowdown rate of 70 to 100 gpt is required to avoid scaling problems. However, a large percentage of sites have been operating high-rate recycle systems at blowdown rates significantly less than this level and managing water chemistry effectively. EPA considered costs for increased dosage of water additives such as scale inhibitors. Lacking further substantiating data, EPA concludes that TDS/scaling issues do not significantly affect the technical achievability of the model PNF.

Age of equipment and facilities involved - Systems that achieve the model PNF include both the oldest and newer furnaces. However, blast furnaces must be rebuilt from time to time to replace refractories and worn mechanical equipment and to implement process upgrades. Major rebuilds historically have occurred about every 7 years, but current practice is to extend the time between rebuilds to 10 years and longer. Facilities do repairs and minor upgrades more frequently. Because of the extensive nature of these rebuilds, the age of a blast furnace may be best represented by the date of the last major rebuild. Again, systems that achieve the model PNF are not correlated to the period of time since the last major rebuild.

Age is indirectly related to the ability to maintain low PNFs. Based on facility contacts, relatively high rates of PCI are more likely to be used in the larger, newer furnaces than in the smaller, older furnaces. (EPA notes that the newest furnaces have been in production for more than 20 to nearly 40 years.) As a result, EPA selected a model PNF that is achievable by both the older and newer furnaces.

Location - Most blast furnace operations in the United States are located in the midwestern part of the country (western Pennsylvania, West Virginia, Ohio, Kentucky, Indiana and Illinois). One furnace is located in the East, one in the Southeast, and one in the West. The primary engineering factors related to attaining low blowdown rates are: (1) isolation of noncontact cooling waters from the process water system; (2) isolation of excessive amounts of

storm water and other extraneous sources of makeup water; (3) surge capacity to address hydraulic imbalances during furnace start-ups and shut downs; (4) adequate recirculating water cooling capacity; and, (5) control of circulating water chemistry to address fouling, scaling, and corrosion. EPA did not collect, nor did industry provide, any information or data that indicates that these factors are related to location to such a degree that EPA would consider segmentation on the basis of location.

Size - EPA compared blast furnace production to performance. Sites achieving the model PNF of 25 gpt include both the largest and smallest sites.

Non-water quality environmental impacts, including energy - Non-water quality environmental impacts associated with achieving low PNFs are atmospheric emissions of particulate matter from evaporation and drift from cooling towers and secondary environmental and energy impacts from manufacturing and using of recirculating water treatment chemicals. Differences in these factors over the relatively narrow range of PNFs under consideration (25 to 70 gpt) are not a significant consideration. Any impacts have already occurred because most blast furnaces have high-rate recycle systems. The incremental non-water quality environmental impacts and energy consumption associated with achieving the model PNF are minimal.

Finally, EPA considered whether any of the plants whose wastewater treatment performance data were used to develop the model LTAs achieve the model PNF, operate a high-rate recycle system, or operate PCI/GCI. Among these sites, one achieves the model PNF and all operate high-rate recycle systems. One site uses PCI.

Following its evaluation of the technology options for the final rule, EPA has retained a model PNF of 25 gpt for the reasons stated above. However, EPA agrees with the commenters that the model PNF developed for ironmaking is not technically achievable by all facilities in the subcategory for the reasons described previously. For this and other reasons stated in the preamble and elsewhere in this document, EPA has decided not to revise limitations and standards for ironmaking.

13.5 Subpart C: Integrated Steelmaking Subcategory

The proposed integrated steelmaking subcategory includes the following manufacturing operations conducted at integrated steel mills: basic oxygen steelmaking, ladle metallurgy, vacuum degassing, and continuous casting. In addition, within basic oxygen steelmaking operations EPA also considers the following three processes: semi-wet pollution controls, wet-open combustion, and wet-suppressed combustion. EPA evaluated wastewater discharge flow rates separately for each process operation as described in the following subsections. The results of this evaluation are summarized here, and detailed support documentation is located in the Iron and Steel Administrative Record (Section 14.1, DCN IS10441 and Section 14.1, DCN IS10824 in the rulemaking record). Note that, for the final rule, EPA decided to retain the subcategorization structure from the 1982 rule, which includes separate subcategories for steelmaking, vacuum degassing, and continuous casting. With the exception of semi-wet basic oxygen furnaces (BOFs), EPA also decided to retain the limitations

and standards from the 1982 rule. This section describes the model PNFs that EPA developed for technology options considered for the final rule, but ultimately rejected.

Six of the 20 integrated steelmaking sites operate combined wastewater treatment and/or recycle systems for vacuum degassing, continuous casting, and/or hot forming operations. To calculate the site-specific PNF for a particular manufacturing operation that shares a combined treatment and/or recycle system with one or more other manufacturing operations, EPA apportioned the total system wastewater discharge flow by the percentage of the total treatment and/or recycle system influent wastewater flow from that process.

13.5.1 Basic Oxygen Furnace (BOF) Steelmaking

EPA analyzed industry survey responses for 24 integrated BOF shops in operation in 1997 to develop the steelmaking model PNFs that EPA considered for the final rule. Of the 24 BOF shops, 8 operate semi-wet air pollution control systems, 8 operate wet-open air pollution control systems, 7 operate wet-suppressed air pollution control systems, and 1 operates a combination wet-open/wet-suppressed air pollution control system.

Blowdown from air pollution control systems is the primary wastewater source from BOF steelmaking. Other minor process wastewater sources are site-specific and are either reused as makeup for the air pollution control systems or discharged separately to treatment. EPA excluded ground water from its PNF analysis; pollutant discharge allowances for these wastewaters are provided by regulatory mechanisms other than the limitations and standards considered by EPA for the final rule, as described in Section 13.1.

Semi-Wet Air Pollution Control

EPA first ordered the semi-wet BOF shops by PNF and assessed the distribution. Based on the distribution, EPA initially considered 10 gpt as the model PNF because a significant portion of the shops, four of the eight or 50 percent, currently achieve the performance level, suggesting it is widely demonstrated and achievable.

Note that two sites reported zero discharge of process wastewater, while one site reported a discharge of 1 gpt. Sites achieve zero or relatively low discharges from their semi-wet systems by balancing the applied water with water that evaporates in the conditioning system. Although the 1982 regulation designates semi-wet air pollution control as zero discharge, currently not all sites are able to achieve this because of safety considerations. Some sites operate their semi-wet systems with excess water, which is subsequently discharged, to flush the air pollution control duct work and prevent the buildup of debris within the ductwork. If this wet debris accumulates, it has the potential to fall back into the BOF, causing explosions and process upsets. The Agency recognizes the benefit of using excess water in these systems and, therefore, did not consider selecting a model PNF based on zero discharge.

Next, EPA assessed the following factors to determine whether any suggested that a model PNF of 10 gpt is not technically achievable.

Process - EPA assessed the type of wet air pollution control used compared to performance. As discussed above, four of the eight BOF shops using semi-wet air pollution control achieve the model PNF.

Age of equipment and facilities involved - EPA compared the first year of operation of each BOF shop to the PNF. All eight of these shops began production between 1959 and 1970. Shops that achieve the model PNF include both the oldest and the newest of these mills. Thus, age is not considered a significant factor for selecting a PNF for BOFs with semi-wet air pollution controls.

Location - EPA compared mill location and performance. Seven of the eight mills using semi-wet air pollution controls are located in the Midwest. The one mill with semi-wet air pollution control located outside the Midwest (Alabama) does not achieve the model PNF; however, EPA did not collect, nor did industry provide, any information or data that indicates this is due to location in a southern region.

Size - EPA compared production of BOFs with semi-wet air pollution controls to performance. Sites achieving the model PNF of 10 gpt include both the largest and smallest sites.

Non-water quality environmental impacts, including energy - Non-water quality environmental impacts related to water conservation are not a significant consideration for BOF steelmaking with semi-wet air pollution control. Any impacts have already occurred because most BOFs either have high-rate recycle systems or discharge to high-rate recycle systems in other processes (e.g., vacuum degassing, continuous casting, hot forming). The incremental non-water quality environmental impacts and energy consumption associated with achieving the model PNF are minimal.

Next, EPA evaluated whether a combination of the factors listed above at specific shops might impact the technical achievability of the model PNF. EPA found that the combination of factors at mills that achieve the model PNF is comparable to the combination of factors at mills that do not achieve the model PNF.

Finally, EPA considered whether any of the BOF shops whose wastewater treatment performance data EPA used to develop the model LTAs achieve the model PNF. The two BAT treatment technology sites operate a total of six BOF shops, none of which operates a semi-wet air pollution control device.

Wet-Open Air Pollution Control

EPA first ordered the wet-open BOF shops by PNF and assessed the distribution. Review of the distribution suggested possible model PNFs of 0, 46, 86, and 103 gpt. These correspond to recycle rates of approximately 100 percent, 91.7 percent, 98.2 percent, and 88.3 percent, respectively. EPA rejected model PNFs of 0 and 46 gpt because of substantial costs needed to achieve these performance levels and concerns regarding technical achievability by all

facilities. However, a model PNF of 103 gpt does not represent the greatly improved performance commonly achieved by mills since the 1982 regulation. Therefore, EPA initially considered 86 gpt as the model PNF for three reasons. First, the performance level is representative of well-operated high-rate recycle systems. Second, the performance level represents a significant improvement in performance from the current regulation. Third, a significant portion of the systems, four of the eight systems or 50 percent, currently achieve the performance level, suggesting it is widely demonstrated and achievable. A model PNF of 86 gpt is more than four times that considered by EPA for the proposed rule.

Next, EPA assessed the following factors to determine whether any suggested that a model PNF of 86 gpt is not technically achievable.

Process - EPA compared the type of wet air pollution control used to performance. As discussed above, four of the eight BOF shops using wet-open air pollution control achieve the model PNF.

Age of equipment and facilities involved - EPA compared the first year of operation of each BOF shop to PNF. All eight of these BOF shops using wet-open air pollution control began production within a relatively short period of time between 1964 and 1973; therefore, the range of ages is not significant. Thus, age is not considered a significant factor for selecting a PNF for BOFs with wet-open air pollution controls.

Location - BOF shops with wet-open air pollution control are not widely dispersed throughout the United States. Therefore, a comparison of location to performance is not relevant.

Size - EPA compared production of BOFs with wet-open wet air pollution controls to performance. Sites achieving the model PNF of 86 gpt include both the largest and smallest sites.

Non-water quality environmental impacts, including energy - Non-water quality environmental impacts related to high-rate recycle systems are not a significant consideration for BOF steelmaking with wet-open air pollution control. Any impacts have already occurred because most BOFs either have high-rate recycle systems or discharge to high-rate recycle systems in other processes (e.g., vacuum degassing, continuous casting, hot forming). The incremental non-water quality environmental impacts and energy consumption associated with achieving the model PNF are minimal.

Next, EPA evaluated whether a combination of the factors listed above at specific shops might impact the technical achievability of the model PNF. EPA found that the combination of factors at mills that achieve the model PNF is comparable to the combination of factors at mills that do not achieve the model PNF.

Finally, EPA considered whether any of the BOF shops whose wastewater treatment performance data EPA used to develop the model LTAs achieve the model PNF. The

two BAT treatment technology sites operate a total of two BOF shops with wet-open air pollution control, both of which achieve the model PNF. Both operate recycle systems and use carbon dioxide injection in reducing blowdown rate.

Wet-Suppressed Air Pollution Control

EPA first ordered the wet-suppressed BOF shops by PNF and assessed the distribution. Review of the distribution suggested possible model PNFs of 22 and 48 gpt. These correspond to recycle rates of approximately 98.2 and 92 percent, respectively. EPA rejected a model PNF of 48 gpt because it does not represent the greatly improved performance commonly achieved by mills since the 1982 regulation. Therefore, EPA initially considered 22 gpt as the model PNF for three reasons. First, the performance level is representative of well-operated high-rate recycle systems. Second, the performance level represents a significant improvement in performance from the current regulation. Third, a significant portion of the systems, three of the seven systems or 43 percent, currently achieve the performance level, suggesting it is widely demonstrated and achievable.

Next, EPA assessed the following factors to determine whether any suggested that a model PNF of 22 gpt is not technically achievable.

Process - EPA assessed the type of wet air pollution control used compared to performance. As discussed above, three of the seven BOF shops using wet-suppressed air pollution control achieve the model PNF.

Age of equipment and facilities involved - EPA compared the first year of operation of each BOF shop to the PNF. Mills that achieve the model PNF include older mills. The oldest mill does not achieve the model PNF; however, EPA estimated costs for this facility to achieve the model PNF including costs to increase the BOF shop recycle rate from 87.9 percent to greater than 98 percent. EPA is not aware of any reason why age would impact the technical achievability of the model PNF.

Location - EPA compared system location to performance. Systems that achieve the model PNF are located mainly in the Midwest, as are most of the BOF shops using wet-suppressed air pollution control. Shops located outside the Midwest that do not achieve the model PNF use recycle rates less than 98 percent. EPA costed these mills to increase their recycle rates to greater than 98 percent. EPA is not aware of any reason why location would impact the technical achievability of the model PNF.

Size - EPA compared production of BOFs with wet-suppressed air pollution controls to performance. Sites achieving the model PNF of 22 gpt include both the largest and smallest sites.

Non-water quality environmental impacts, including energy - Non-water quality environmental impacts related to high-rate recycle systems are not a significant consideration for BOF steelmaking with wet-suppressed air pollution control. Any impacts have already occurred

because most BOFs have high-rate recycle systems or discharge to high-rate recycle systems in other processes (e.g., vacuum degassing, continuous casting, hot forming). The incremental non-water quality environmental impacts and energy consumption associated with achieving the model PNF are minimal.

Next, EPA evaluated whether a combination of the factors listed above at specific shops might impact the technical achievability of the model PNF. EPA found that the combination of factors at mills that achieve the model PNF is comparable to the combination of factors at mills that do not achieve the model PNF.

Finally, EPA considered whether any of the BOF shops whose wastewater treatment performance data EPA used to develop the model LTAs achieve the model PNF. The two BAT treatment technology sites operate one BOF shop with wet-suppressed air pollution control. This site does not achieve the model PNF. This site does operate a high-rate recycle system, but at a recycle rate of less than 98.2 percent.

13.5.2 Ladle Metallurgy

None of the sites that use ladle metallurgy reported generating or discharging process wastewater from this operation; therefore, EPA has designated ladle metallurgy as a zero discharge operation.

13.5.3 Vacuum Degassing

EPA analyzed industry survey responses for 14 integrated vacuum degassing systems to develop the model PNF that EPA considered for the final rule. Blowdown from the vacuum generating system was the only reported source of process wastewater.

EPA first ordered the vacuum degassing systems by PNF and assessed the distribution. Review of the distribution showed a smooth progression of PNFs ranging from 0 to 177 gpt with no clear indicator of "best" performance. EPA rejected potential model PNFs ranging from 0 to 7 gpt because of substantial costs required to achieve this performance level and concerns regarding technical achievability by all facilities. As an initial determination of the model PNF, EPA considered 13 gpt, which corresponds to a general recycle rate of approximately 99 percent. EPA considers this performance to be representative of well-operated, high-rate recycle systems in this segment. The performance level also represents a significant improvement in performance from the current regulation. Third, a significant portion of the mills, 4 of the 11 mills or 36 percent, currently achieve the performance level, suggesting it is widely demonstrated and achievable.

Next, EPA assessed whether the model PNF of 13 gpt is technically achievable. Process water recycle systems at integrated mills are typically operated by mill personnel, and the chemistry within the systems is most often managed by chemical suppliers on a contract basis. Based on review of survey information and follow-up contacts with environmental control personnel and their chemical suppliers, EPA concluded that process water recycle system flows

are often managed at levels below maximum design capacity. In other words, mills in this circumstance have some available hydraulic capacity to pump and cool more water through the systems than they currently process. Additionally, at many mills, the chemical suppliers determine blowdown rates and recycle system chemistry, with the proviso that they have to stay within permit limits. Current NPDES permits issued under the 1982 regulation do not require optimizing recycle systems and minimizing blowdown rates to the level of the model PNFs considered for the final rule. Although the PNFs discussed in this section are well demonstrated for all operations in this subcategory, many mills do not achieve the PNFs and have had no incentive to do so.

Next, EPA assessed the following specific factors to determine whether any suggested that a model PNF of 13 gpt is not technically achievable.

Process - EPA compared the type of vacuum degassing system used (i.e., Ruhrstahl-Heraeus, RH-OB, argon stirring, RH-KTB, vacuum tank degassing, VCP-KIB, induction stirring and MAN GHH VCP Vacuum Circulation Process) to performance. Both Ruhrstahl-Heraeus and vacuum tank degassing are demonstrated to achieve the model PNF. EPA cannot adequately assess whether these other systems can achieve the necessary recycle rate and model PNF because of the limited amount of data on their performance level and recycle rates. Additionally, several non-integrated sites using these types of vacuum degassing systems achieve the model PNF considered by EPA for integrated sites. EPA is not aware of any technical reasons why these systems at integrated sites would not be able to achieve the model PNF, and EPA has not received any comments suggesting that the type of vacuum degassing system used affects the technical achievability of the model PNF.

Age of equipment and facilities involved - EPA compared the first year of operation of vacuum degassing systems to the PNFs. Only one system began operations before 1987, but it is also not operating BAT model treatment technology. The relatively high PNF for this system is the result of leaks into the system, and EPA estimated costs required to mitigate these leaks. Otherwise, there is no correlation between the age of equipment and PNF.

Location - EPA compared system location to performance. The majority of systems analyzed are located in the Midwest. The one system located in a southern region does not achieve the model PNF, but it also does not achieve a recycle rate of 99 percent. EPA is not aware of any reason why this system or any other in a southern region would not achieve a recycle rate of 99 percent and the corresponding model PNF.

Size - EPA compared vacuum degasser production to performance. Sites achieving the model PNF of 13 gpt include both the largest and smallest sites.

Non-water quality environmental impacts, including energy - Non-water quality environmental impacts related to high-rate recycle systems are not a significant consideration for vacuum degassing. Any impacts have already occurred because most integrated vacuum degassing operations either have high-rate recycle systems or discharge to high-rate recycle systems in other processes (e.g., BOFs, continuous casting, hot forming). The incremental non-

water quality environmental impacts and energy consumption associated with achieving the model PNF are minimal.

Next, EPA evaluated whether a combination of the factors listed above at specific systems might impact the technical achievability of the model PNF. EPA found that the combination of factors at mills that achieve the model PNF is comparable to the combination of factors at mills that do not achieve the model PNF.

Finally, EPA considered whether any of the sites whose wastewater treatment performance data EPA used to develop the model LTAs achieve the model PNF. The two BAT treatment technology sites operate a total of two vacuum degassers, one of which achieves the model PNF. This degasser operates a high-rate recycle system with BAT treatment. The remaining BAT treatment technology site also operates a high-rate recycle system, but at a recycle rate of less than 99 percent.

13.5.4 Continuous Casting

EPA analyzed industry survey responses for 31 integrated continuous casting systems to develop the model PNF that EPA considered for the final rule. EPA included in its PNF analysis reported discharge flow rates for process wastewaters, including contact spray cooling, flume flushing, and equipment cleaning wastewaters. EPA did not include non-process wastewater sources, such as low-volume losses from closed caster mold and machine cooling water systems, in its PNF analysis, for the reasons discussed in Section 13.1.

EPA first ordered the continuous casting systems by PNF and assessed the distribution. Review of the distribution suggested a model PNF of 5 gpt. EPA rejected potential model PNFs ranging from 0 to 5 gpt because of substantial costs required to achieve this performance level and concerns regarding technical achievability by all facilities. EPA initially considered the model PNF selected for the 1982 rule as the model PNF for this rule, 25 gpt, which corresponds to a general recycle rate of approximately 97.4 percent. EPA considers this performance to be representative of well-operated, high-rate recycle systems in this segment. Finally, a significant portion of the systems, 12 of the 24 systems or 50 percent, currently achieve the performance level, suggesting it is widely demonstrated and achievable.

Next, EPA assessed whether the model PNF of 25 gpt is technically achievable. Process water recycle systems at integrated mills are typically operated by mill personnel, and the chemistry within the systems is most often managed by chemical suppliers on a contract basis. Based on review of survey information and follow-up contacts with environmental control personnel and their chemical suppliers, EPA concluded that process water recycle system flows are often managed at levels below maximum design capacity. In other words, mills in this circumstance have some available hydraulic capacity to pump and cool more water through the systems than they currently process. Additionally, at many mills, the chemical suppliers determine blowdown rates and recycle system chemistry, with the proviso that they have to stay within permit limits.

Next, EPA assessed the following specific factors to determine whether any suggested that a model PNF of 25 gpt is not technically achievable.

Product Cast - EPA compared the type of product cast (i.e., billet, bloom, slab, thin slab, slab/bloom) to performance. The table below demonstrates that billet and slab process types achieve the model PNF.

Product Cast	Percentage of Facilities Achieving Target PNF
Billet	100%
Bloom	0%
Slab	42%
Thin Slab	0%
Slab/Bloom	0%

One site casts a combination of slabs and blooms, making it difficult to assess whether the model PNF is achievable by combination slab and bloom casters.

The two bloom casters achieve PNFs greater than 25 gpt. Both sites combine bloom casting wastewater with wastewaters from the BOF, vacuum degassing and other continuous casting operations. Both systems operate recycle systems. One site's treatment consists of a cooling tower, water filters, oil skimmer and scale pit. The other site operates a recycle system with treatment consisting of a cooling tower, water filter, oil skimmer, scale pit, and gravity thickener. Both sites with bloom casters can achieve the model PNF by increasing recycle rates from the combined treatment system.

One site casts thin slabs, making it difficult to assess whether the model PNF is achievable by thin slab casters. EPA created a separate segment for thin slab producers, including both integrated and non-integrated mills, based on industry trends toward thinner products that may require higher PNFs. Section 13.7.6 presents EPA's analyses for thin slab producers.

Age of equipment and facilities involved - EPA compared the first year of operation of continuous casting systems to PNFs. Systems that achieve the model PNF include both the oldest and the newest systems. Thus, age is not considered a significant factor for selecting a PNF for continuous casting operations at integrated mills.

Location - EPA compared system location to performance. Systems that achieve the model PNF are located in a variety of areas, including arid and semi-arid regions and northern and southern regions.

Size - EPA compared continuous caster production controls to performance. Sites achieving the model PNF of 25 gpt include both the largest and smallest sites.

Non-water quality environmental impacts, including energy - Non-water quality environmental impacts related to high-rate recycle systems are not a significant consideration for continuous casting. Any impacts have already occurred because most integrated continuous casters either have high-rate recycle systems or discharge to high-rate recycle systems in other processes (e.g., vacuum degassing or hot forming). The incremental non-water quality environmental impacts and energy consumption associated with achieving the model PNF are minimal.

Next, EPA evaluated whether a combination of the factors listed above at specific systems might impact the technical achievability of the model PNF. EPA found that the combination of factors at mills that achieve the model PNF is comparable to the combination of factors at mills that do not achieve the model PNF.

Finally, EPA considered whether any of the mills whose wastewater treatment performance data EPA used to develop the model LTAs achieve the model PNF. The two BAT treatment technology sites operate a total of six continuous caster systems, four of which achieve the model PNF. Of the remaining two continuous casters, one does not operate a high-rate recycle system, and one operates a high-rate recycle system, but at a recycle rate less than 97.4 percent.

13.6 Subpart D: Integrated and Stand-Alone Hot Forming Subcategory[1]

Fifty-seven integrated and stand-alone sites indicated in their industry survey responses that they conducted hot forming operations; EPA identified 71 hot forming operations at integrated and stand-alone mills that were active in 1997. The Agency was unable to analyze data from three processes due to incomplete industry survey responses.

The Agency identified spray water, used for cooling and descaling of the steel during the hot forming process, as the primary wastewater source. For this subcategory, EPA uses spray water as a generic term because there are many different sources of spray water within a hot forming mill. Spray water includes the following: high-pressure descaling sprays, roll and/or roll table spray cooling, die spray cooling, scarfer emissions control, hot shear spray cooling, flume flushing, low-pressure/laminar flow cooling, and product cooling on runout tables. Other sources of wastewater included in the development of the model PNFs were roll shop wastewater, wastewater collected in basement sumps, scarfer water, and equipment cleaning water.

The Agency did not include non-process wastewater sources in determining the model PNF, as discussed in Section 13.1. Non-process wastewater from hot forming operations

[1]EPA did not perform a reanalysis of the model PNFs for this subcategory for the final rule, because it would not affect the Agency's final decision. This discussion reflects the analyses from proposal.

that is often treated with process wastewater includes noncontact cooling water from reheat furnaces.

During the analysis, the Agency determined that 12 of the 57 sites operate combined wastewater treatment and/or recycle systems for their hot forming operations. To calculate the site-specific PNF for a particular manufacturing operation that shares a combined treatment and/or recycle system with one or more other manufacturing operations, EPA prorated the total system wastewater discharge flow by the percentage of the total treatment and/or recycle system influent wastewater flow from that process.

EPA selected the model flow rate based on wastewater treatment systems operating with 96 percent recycle. The Agency determined that systems operating with this level of recycle were the best performing mills in the subcategory. EPA selected 100 gpt as the model PNF for integrated and stand-alone hot forming. Twenty-one of the 68 operations reported PNFs less than or equal to 100 gpt, including 7 operations that reported zero discharge. All of the operations currently meeting the model PNF operate high-rate recycle systems with recycle rates of at least 95 percent. The mills used to develop the model flow rate are representative of integrated and stand-alone hot forming mills across the industry: they generate wastewater from a variety of sources, including contact water, rolls shops, and basement sumps; they hot form a range of products (e.g., strip, plate, pipe, tube, bar); and they are located in different geographic locations. For those operations with recycle systems that are not achieving the model flow rate, the Agency included sufficient costs to upgrade all of the systems to achieve this rate. For those operations with once-through treatment systems, the Agency included sufficient costs to install and operate high-rate recycle systems that could achieve the model flow rate.

The Agency did not select zero discharge as the model PNF for integrated and stand-alone hot forming sites due to the costs. The Agency determined that the capital costs involved with retrofitting existing recycle systems to operate at a 100-percent recycle rate would be cost-prohibitive.

13.7 Subpart E: Non-Integrated Steelmaking and Hot Forming Subcategory

The proposed non-integrated steelmaking and hot forming subcategory includes the following manufacturing operations conducted at non-integrated steel mills: electric arc furnace (EAF) steelmaking, ladle metallurgy, vacuum degassing, continuous casting, and hot forming. EPA evaluated wastewater discharge flow rates separately for each process operation as described in the following subsections. The results of this evaluation are summarized here, and detailed support documentation is located in the Iron and Steel Administrative Record (Section 14.1, DCN IS10357 and Section 14.1, DCN IS10824 in the rulemaking record). EPA proposed two segments within this subcategory, carbon and alloy steel and stainless steel, because of differences in pollutants present in the wastewaters. EPA did not find discernable differences in water use, wastewater sources, and wastewater discharge flow rates between the segments; therefore, this discussion of the development of model PNFs does not distinguish between the two segments.

Note that for the final rule, EPA decided to retain the subcategorization structure and limitations and standards from the 1982 rule, which includes separate subcategories for steelmaking, vacuum degassing, and continuous casting. This section describes the model PNFs that EPA developed for technology options considered for the final rule, but ultimately rejected.

Approximately one-third of non-integrated sites operate combined wastewater treatment and/or recycle systems for vacuum degassing, continuous casting, and/or hot forming operations. Non-integrated mills commonly cotreat these process wastewaters. The common characteristics of the process wastewater from each operation allow the sites to commingle and treat the wastewater. To calculate the site-specific PNF for a particular manufacturing operation that shares a combined treatment and/or recycle system with one or more other manufacturing operations, EPA prorated the total system wastewater discharge flow by the percentage of the total treatment and/or recycle system influent wastewater flow from that process.

13.7.1 Electric Arc Furnace (EAF) Steelmaking

The Agency evaluated data from 69 facilities that indicated in their industry survey response that they perform non-integrated steelmaking. The analysis included a total of 76 EAF shops and 132 EAFs. All EAFs in the United States are equipped with dry or semi-wet air pollution controls, and none discharge process wastewater. (One EAF shop has a wet scrubber system that functions as a backup.) Based on this evaluation, EPA has designated EAF steelmaking as a zero discharge operation.

13.7.2 Ladle Metallurgy

None of the sites that use ladle metallurgy reported generating or discharging process wastewater from this operation; therefore, EPA has designated ladle metallurgy as a zero discharge operation.

13.7.3 Vacuum Degassing

EPA analyzed industry survey responses for 29 non-integrated vacuum degassing systems to develop the model PNF that EPA considered for the final rule. Available data were insufficient to calculate PNFs for three of these systems. Blowdown from the vacuum generating system was the only reported source of process wastewater.

EPA first ordered the vacuum degassing systems by PNF and assessed the distribution. Review of the distribution suggested model PNFs of approximately 0, 4 and 23 gpt. These correspond to recycle rates of approximately 100 percent, 99.5 percent or greater, and 99.0 percent or greater, respectively. EPA rejected potential model PNFs of 0 and 4 gpt because of substantial costs needed to achieve these performance levels and concerns regarding technical achievability by all facilities. However, a model PNF of 23 gpt does not represent the performance demonstrated by mills since the 1982 regulation. Therefore, EPA initially considered 10 gpt as the model PNF for three reasons. First, the performance level is representative of well-operated, high-rate recycle systems in this segment. Second, the

performance level represents a significantly lower discharge flow rate than that demonstrated in 1982. Third, the PNF is widely demonstrated and achievable, as evidenced by the fact that 13 of the 26 systems, or 50 percent, achieve the performance level.

Next, EPA assessed whether the model PNF of 10 gpt is technically achievable. Process water recycle systems at non-integrated mills are typically operated by mill personnel, and the chemistry within the systems is most often managed by chemical suppliers on a contract basis. Based on review of survey information and follow-up contacts with environmental control personnel and their chemical suppliers, EPA concluded that process water recycle system flows are often managed at levels below maximum design capacity. In other words, mills in this circumstance have some available hydraulic capacity to pump and cool more water through the systems than they currently process. Additionally, at many mills, the chemical suppliers determine blowdown rates and recycle system chemistry, with the proviso that they have to stay within permit limits. Current NPDES permits issued under the 1982 regulation do not require optimizing recycle systems and minimizing blowdown rates to the level of the model PNFs considered for the final rule. Although the PNFs discussed in this section are well demonstrated for all operations in this subcategory, many mills do not achieve the PNFs and have had no incentive to do so.

EPA also assessed the following specific factors to determine whether any suggested that a model PNF of 10 gpt is not technically achievable.

Process - EPA compared the type of vacuum degasser system used (i.e., argon stirring, ladle, tank, stream, vacuum arc remelt, ladle refining, vacuum induction, recirculation, Ruhrstahl-Heraeus) to performance. All process types, with the exception of stream, are demonstrated to achieve the model PNF. The performance levels achieved by the two stream systems are 19 and 32 gpt, respectively. The recycle rate achieved by one of the stream systems is unknown, and the recycle rate achieved by the second stream system is 98.9 percent. Currently, this system is not operating at capacity. An increase in recycle rate to 99.4 percent or greater would allow the system to achieve the model PNF. EPA is not aware of any technical reasons why stream systems would not be able to achieve the model PNF, and EPA has not received any comments suggesting that the type of vacuum degasser system used affects the technical achievability of the model PNF.

Age of equipment and facilities involved - EPA compared the first year of operation of vacuum degassing systems to the PNFs. Systems that achieve the model PNF include both the oldest and the newest systems. Thus, age is not considered a significant factor for selecting a PNF for vacuum degassing operations at non-integrated mills.

Location - EPA compared geographical location to performance. Systems that achieve the model PNF are located in a variety of areas, including arid and semi-arid regions and northern and southern regions.

Size - EPA compared vacuum degasser production to performance. Sites achieving the model PNF of 10 gpt include both the largest and smallest sites.

Non-water quality environmental impacts, including energy - Non-water quality environmental impacts related to high-rate recycle systems are not a significant consideration for vacuum degassing. Any impacts have already occurred because most non-integrated vacuum degassing operations either have high-rate recycle systems or discharge to high-rate recycle systems in other processes (e.g., casting or hot forming). The incremental non-water quality environmental impacts and energy consumption associated with achieving the model PNF are minimal.

Next, EPA evaluated whether a combination of the factors listed above at specific systems might impact the technical achievability of the model PNF. EPA found that the combination of factors at mills that achieve the model PNF is comparable to the combination of factors at mills that do not achieve the model PNF.

Finally, EPA considered whether any of the sites whose wastewater treatment performance data EPA used to develop the model LTAs achieve the model PNF. None of the four BAT treatment technology sites operates vacuum degassers; however, EPA concludes that the model LTAs are technically achievable for all sites in this subcategory for the reasons discussed in the Agency's reassessment of the model LTAs for the final rule (Section 14 and elsewhere in the rulemaking record).

13.7.4 Continuous Casting

EPA analyzed industry survey responses for 76 non-integrated continuous casting systems to develop the model PNF that EPA considered for the final rule. Available data were insufficient to calculate PNFs for two additional systems. In its PNF analysis, EPA included reported discharge flow rates for process wastewaters, including contact spray cooling and equipment cleaning wastewaters. EPA did not include non-process wastewater sources, such as low-volume losses from closed caster mold and machine cooling water systems, for the reasons discussed in Section 13.1.

EPA first ordered the continuous casting systems by PNF and assessed the distribution. Review of the distribution suggested model PNFs of 0, 4, 11, and 18 gpt. These correspond to recycle rates of approximately 100 percent, 99.6 percent and greater, 99.3 percent and greater, and 98.9 percent and greater, respectively. EPA rejected PNFs of 0 and 4 gpt because of substantial costs needed to achieve this performance level and concerns regarding technical achievability by all facilities. EPA also rejected a PNF of 18 gpt because it does not represent the demonstrated performance commonly achieved by mills. Therefore, EPA initially considered 11 gpt as the model PNF for three reasons. First, the performance is representative of well-operated, high-rate recycle systems in this segment. Second, the performance level represents a significantly lower flow rate for casters than that considered in 1982. Finally, a significant portion of the continuous casting systems, 32 of the 76 systems or 42 percent, currently achieve the performance level, suggesting it is widely demonstrated and achievable.

Next, EPA assessed whether the model PNF of 11 gpt is technically achievable. Process water recycle systems at non-integrated mills are typically operated by mill personnel,

and the chemistry within the systems is most often managed by chemical suppliers on a contract basis. Based on review of survey information and follow-up contacts with environmental control personnel and their chemical suppliers, EPA concluded that process water recycle system flows are often managed at levels below maximum design capacity. In other words, mills in this circumstance have some available hydraulic capacity to pump and cool more water through the systems than they currently process. Additionally, at many mills, the chemical suppliers determine blowdown rates and recycle system chemistry, with the proviso that they have to stay within permit limits. Current NPDES permits issued under the 1982 regulation do not require optimizing recycle systems and minimizing blowdown rates to the level of the model PNFs considered for the final rule. Although the PNFs discussed in this section are well demonstrated for all operations in this subcategory, many mills do not achieve the PNFs and have had no incentive to do so.

Next, EPA assessed the following specific factors to determine whether any suggested that a model PNF of 11 gpt is not technically achievable.

Product Cast - EPA compared the type of product cast (i.e., billet, bloom, slab, thin slab, other, various) to performance. All process types are demonstrated to achieve the model PNF as summarized below.

Product Cast	Percentage of Facilities Achieving Model PNF
Billet	42%
Bloom	29%
Slab	50%
Thin Slab	40%
Other	50%
Various	43%

Although a significant percentage of thin slab producers currently achieve the model PNF, EPA created a separate segment for thin slab products. This decision was based on industry product trends toward thinner products that may need higher PNFs and is described in detail in Section 13.7.6.

Age of equipment and facilities involved - EPA compared the first year of operation of continuous casting systems to the PNFs. Systems that achieve the model PNF include both the oldest and the newest systems. Thus, age is not considered a significant factor for selecting a PNF for continuous casting operations at non-integrated mills.

Location - EPA compared system geographical location to performance. Systems that achieve the model PNF are located in a variety of areas, including arid and semi-arid regions and northern and southern regions.

Size - EPA compared continuous caster production to performance. Sites achieving the model PNF of 11 gpt include both the largest and smallest sites.

Non-water quality environmental impacts, including energy - Non-water quality environmental impacts related to high-rate recycle systems are not a significant consideration for continuous casting. Any impacts have already occurred because most non-integrated continuous casters either have high-rate recycle systems or discharge to high-rate recycle systems in other processes (e.g., vacuum degassing or hot forming). The incremental non-water quality environmental impacts and energy consumption associated with achieving the model PNF are minimal.

Next, EPA evaluated whether a combination of the factors listed above at specific systems might impact the technical achievability of the model PNF. EPA found that the combination of factors at mills that achieve the model PNF is comparable to the combination of factors at mills that do not achieve the model PNF.

Finally, EPA considered whether any of the mills whose wastewater treatment performance data EPA used to develop the model LTAs achieve the model PNF. The three BAT treatment technology sites operate a total of four continuous caster systems, three of which are thin slab casting systems. The one conventional continuous caster system does not achieve the model PNF. This system operates a high-rate recycle system, but at a recycle rate of less than 99.3 percent. Both of the BAT sites operating thin slab casters achieve the combined continuous casting and hot forming model PNF considered for that segment of the industry.

13.7.5 Hot Forming

EPA analyzed industry survey responses for 98 non-integrated hot forming mills to develop the model PNF that EPA considered for the final rule. Available data from four other mills were insufficient to calculate PNFs. In its PNF analysis, EPA included reported discharge flow rates for process wastewaters, including contact spray cooling, scarfer emissions control, flume flushing, blowdown from roll shop wastewater, wastewater collected in basement sumps, scarfer water, and equipment cleaning and wash-down water. EPA did not include non-process wastewater sources, such as noncontact cooling water from reheat furnaces, which is sometimes included in the process water recycle loop or recycled separately with a blowdown to the process water loop, for the reasons discussed in Section 13.1.

EPA first ordered the hot forming mills by PNF and assessed the distribution. Review of the distribution showed a smooth progression of PNFs up to 285 gpt with no clear indicator of "best" performance. EPA rejected PNFs less than 50 gpt because of substantial costs required to achieve this performance level and concerns regarding technical achievability by all facilities. EPA initially considered 50 gpt as the model PNF, which corresponds to a general recycle rate of approximately 99 percent. EPA considers this performance to be representative of well-operated, high-rate recycle systems in this segment. The performance level also represents a significantly lower flow than those used to develop the 1982 rule, which is based on partial rather than high-rate recycle. Finally, a significant portion of the hot forming mills, 47 of the 98 mills

or 48 percent, currently achieve the performance level, suggesting it is widely demonstrated and achievable.

Next, EPA assessed whether the model PNF of 50 gpt is technically achievable. Process water recycle systems at non-integrated mills are typically operated by mill personnel, and the chemistry within the systems is most often managed by chemical suppliers on a contract basis. Based on review of survey information and follow-up contacts with environmental control personnel and their chemical suppliers, EPA concluded that process water recycle system flows are often managed at levels below maximum design capacity. In other words, mills in this circumstance have some available hydraulic capacity to pump and cool more water through the systems than they currently process. Additionally, at many mills, the chemical suppliers determine blowdown rates and recycle system chemistry, with the proviso that they have to stay within permit limits. Current NPDES permits issued under the 1982 regulation do not require optimizing recycle systems and minimizing blowdown rates to the level of the model PNFs considered for the final rule. Although the PNFs discussed in this section are well demonstrated for all operations in this subcategory, many mills do not achieve the PNFs and have had no incentive to do so.

Next, EPA assessed the following specific factors to determine whether any suggested that a model PNF of 50 gpt is not technically achievable.

Product Formed - EPA compared the type of mill (i.e., primary, section, flat, and pipe and tube) to performance. All process types, with the exception of pipe and tube mills, are demonstrated to achieve the model PNF as summarized below.

Mill Type	Percentage of Facilities Achieving Model PNF
Primary	25%
Section	60%
Flat	30%
Pipe and Tube	0%

Four sites operate a total of seven pipe and tube mills with PNFs ranging from 77 to 22,319 gpt. Four of these mills (at two sites) operate recycle systems. One mill operates a recycle system with no treatment at a recycle rate of 92 percent and achieves a PNF of 77 gpt. The other three mills recycle from the same treatment system at a rate of 94.9 percent and achieve PNFs of 281, 590 and 730 gpt. Treatment consists of a clarifier, cooling tower, sludge dewatering, scale pit, and filter for the recycle system achieving 94.9 percent.

The overall lack of high-rate recycle and treatment systems at pipe and tube mills, and their relatively high PNFs, suggest that the existing performance at these mills is uniformly inadequate. EPA is not aware of any technical reasons why these mills would not be able to achieve the model PNF. Although comments submitted in response to the proposed rule

indirectly suggest that the type of hot forming mill affects the resulting PNF, they provide no technical basis for their contention that pipe and tube mills require a higher PNF (e.g., product quality, process considerations). Therefore, EPA believes that pipe and tube mills can achieve the model PNF.

Although a significant percentage of thin slab producers currently achieve the model PNF, EPA created a separate segment for thin slab products. This decision was based on industry product trends toward thinner products that may require higher PNFs and is described in detail in Section 13.7.6.

Age of equipment and facilities involved - EPA compared the first year of operation of hot forming mills to PNFs. Systems that achieve the model PNF include both the oldest and the newest systems. Thus, age is not considered a significant factor for selecting a PNF for hot forming operations at non-integrated mills.

Location - EPA compared mill geographical location to performance. Systems that achieve the model PNF are located in a variety of areas, including arid and semi-arid regions and northern and southern regions.

Size - EPA compared hot forming mill production to performance. Sites achieving the model PNF of 50 gpt include both the largest and smallest sites.

Non-water quality environmental impacts, including energy - Non-water quality environmental impacts related to high-rate recycle systems are not a significant consideration for hot forming. Any impacts have already occurred because most non-integrated hot forming mills either have high-rate recycle systems or discharge to high-rate recycle systems in other processes (e.g., vacuum degassing or casting). The incremental non-water quality environmental impacts and energy consumption associated with achieving the model PNF are minimal.

Next, EPA evaluated whether a combination of the factors listed above at specific mills might impact the technical achievability of the model PNF. EPA found that the combination of factors at mills that achieve the model PNF is comparable to the combination of factors at mills that do not achieve the model PNF.

Finally, EPA considered whether any of the mills whose wastewater treatment performance data EPA used to develop the model LTAs achieve the model PNF. The three BAT treatment technology sites operate a total of three hot forming mills, two of which are operated in combination with thin slab casters. The one hot forming mill not associated with a thin slab caster does not achieve the model PNF. This site operates a recycle system, but it is operated at a rate below 99 percent. Additionally, one hot forming mill with treatment beyond BAT achieves a PNF of 14 gpt. Both of the BAT sites operating thin slab casters achieve the combined continuous casting and hot forming model PNF considered for that segment of the industry.

13.7.6 Combined Thin Slab Casting and Hot Forming

This section discusses EPA's rationale for considering a separate industry segment for thin slab producers for the final rule. For this new segment, EPA developed a combined thin slab casting and hot forming model PNF for use in its analyses for the final rule.

The principal difference between conventional slab casting and thin slab casting is that the cast product is typically 2 inches thick rather than 8 to 10 inches thick. This allows for an abbreviated hot forming process to produce flat-rolled sheet. Conventional hot strip mills operated by steel producers include: reheat furnaces where cast slabs are heated most often from ambient temperature (i.e., cold) to rolling temperature; scale breakers; a series of roughing stands; a series of finishing stands; a laminar flow strip cooling section; and strip coilers. With thin slab casting, the hot rolling process includes a tunnel furnace where slab temperature is normalized to rolling temperature, one or more intermediate rolling stands, a series of finishing stands, a laminar flow strip cooling section, and strip coilers. The savings in investment cost, land requirements, energy requirements and labor are considerable with thin slab casting.

Most thin slab producers have combined treatment and recycle systems for caster spray water and hot strip mill contact water systems. The volume of applied flows and recycle system flows for these facilities is considerably higher than for the remainder of the non-integrated segment, which is dominated by bar products. This is particularly true for the hot forming operations and results from the high volumes of water needed to operate the strip finishing stands and laminar flow strip cooling systems. The overall recycle rates for the thin slab caster are in the range of 96.9 percent to 99.8 percent, with most mills in the range of 98 percent. For the hot mills, the corresponding recycle rates are around 99 percent. For these reasons, EPA considered and evaluated for the final rule a combination thin slab casting and hot forming model PNF.

To develop the combination thin slab casting and hot forming model PNF, EPA analyzed industry survey responses from eight thin slab producers, which include seven non-integrated mills and one integrated mill. EPA calculated site-specific combined thin slab casting and hot forming PNFs using process water blowdown rates from each of the thin slab caster and hot forming mill complexes. These Agency normalized blowdown rates to the combination of the tons of steel cast and processed in the hot strip mill, which is essentially twice the amount of steel cast. Some mills report differences in casting and hot forming production that ostensibly account for yield losses in the hot strip mill, while others report the same production for both units. Next, EPA ordered the mills by the combined PNF and assessed the distribution. Review of the distribution showed a smooth progression of PNFs ranging from 0 to 522 gpt with no clear indicator of "best" performance. EPA rejected potential model PNFs less than 120 gpt because of substantial costs needed to achieve this performance level and concerns regarding technical achievability by all facilities, particularly considering industry product trends toward thinner products that may require higher PNFs. Therefore, EPA initially considered 120 gpt as the model PNF for three reasons. First, the performance is representative of well-operated, high-rate recycle systems in this segment. Second, the performance level represents a significantly lower flow for continuous casting and hot forming than that considered in 1982. Finally, a significant

portion of the thin slab producers, five of the eight mills or 63 percent, currently achieve the performance level, suggesting it is widely demonstrated and achievable.

Next, EPA assessed whether the model PNF of 120 gpt is technically achievable. Process water recycle systems at non-integrated and integrated mills are typically operated by mill personnel, and the chemistry within the systems is most often managed by chemical suppliers on a contract basis. Based on review of survey information and follow-up contacts with environmental control personnel and their chemical suppliers, EPA concluded that process water recycle system flows are often managed at levels below maximum design capacity. In other words, mills in this circumstance have some available hydraulic capacity to pump and cool more water through the systems than they currently process. Additionally, at many mills, the chemical suppliers determine blowdown rates and recycle system chemistry, with the proviso that they have to stay within permit limits. Current NPDES permits issued under the 1982 regulation do not require optimizing recycle systems and minimizing blowdown rates to the level of the model PNFs considered for the final rule. Although the PNFs discussed in this section are well demonstrated for all operations in this subcategory, many mills do not achieve the PNFs and have had no incentive to do so.

Next, EPA assessed the following specific factors to determine whether any suggested that a model PNF of 120 gpt is not technically achievable.

Product Cast - All eight mills produce thin slab products, and five of these mills currently achieve the model PNF.

Age of equipment and facilities involved - All eight of the thin slab producers began production within a relatively short period of time between 1989 and 1997; therefore, the range of ages is not significant.

Location - EPA compared system geographical location to performance. Systems that achieve the model PNF are located in a variety of areas, including arid and semi-arid regions and northern and southern regions.

Size - EPA compared both continuous caster and hot forming production to performance. Sites achieving the model PNF of 120 gpt include both the largest and smallest sites.

Non-water quality environmental impacts, including energy - Non-water quality environmental impacts related to high-rate recycle systems are not a significant consideration for continuous casting. Any impacts have already occurred because the thin slab producers currently operate high-rate recycle systems. The incremental non-water quality environmental impacts and energy consumption associated with achieving the model PNF are minimal.

Next, EPA evaluated whether a combination of the factors listed above at specific systems might impact the technical achievability of the model PNF. EPA found that the

combination of factors at mills that achieve the model PNF is comparable to the combination of factors at mills that do not achieve the model PNF.

Finally, EPA considered whether any of the mills whose wastewater treatment performance data EPA used to develop the model LTAs achieve the model PNF. Two of the three BAT treatment technology sites produce thin slab products, and both sites achieve the model PNF.

13.8 Subpart F: Steel Finishing Subcategory[2]

The Agency established the carbon and alloy steel and stainless steel segments for the steel finishing subcategory because of differences in pollutants present in the wastewater. EPA also identified several manufacturing process divisions between the segments. Below are separate discussions for acid pickling, cold forming, alkaline cleaning, stand-alone continuous annealing, hot coating, and electroplating.

13.8.1 Acid Pickling

The Agency analyzed data from the 61 sites (integrated, non-integrated, and stand-alone) that indicated in their industry survey responses that they performed acid pickling. Because some plants operate more than one acid pickling line, the number of process lines analyzed was 130. The Agency was unable to analyze data from three lines due to incomplete industry survey responses.

For the regulatory alternatives considered by EPA for the final rule, EPA defined acid pickling lines to include alkaline cleaning and salt bath and electrolytic sodium sulfate (ESS) descaling operations that occur on the line that includes acid pickling. In a small number of instances, continuous annealing operations with an associated water quench take place on acid pickling lines. In these instances, EPA included discharge from the annealing rinse as a wastewater source from acid pickling lines. The Agency also evaluated acid regeneration operations to determine the volume of wastewater generated and discharged during these operations.

During the analysis, the Agency identified three major sources of wastewater from acid pickling lines. The first is rinse water used to clean the acid solution from the steel. Rinse water comprises the largest volume of wastewater from acid pickling lines to wastewater treatment operations. The second is spent pickle liquor, a solution composed primarily of acid that is no longer an effective pickling agent. The third major source of wastewater is generated by the WAPC devices located above the pickling tanks. Other minor sources of wastewater included in the development of model PNFs were process wastewater from other operations (e.g., salt bath descaling) on the acid pickling lines (spent process baths and rinses); raw material handling, preparation, and storage; tank clean-outs; and equipment cleaning water. Except for

[2]EPA did not perform a reanalysis of the model PNFs for this subcategory for the final rule, because it would not affect the Agency's final decision. This discussion reflects the analyses from proposal.

blowdown from surface cleaning tanks, these wastewater sources are noncontinuous sources of wastewater that minimally contribute to the total wastewater flow.

When responding to the industry survey, sites had the option of indicating several different discharge destinations for process wastewater. These destinations included the following: on-site regeneration and reuse, discharge to another process or rinse, discharge to treatment, discharge without treatment to publicly owned treatment works (POTWs), discharge to privately owned treatment works (PrOTWs), recycle and reuse, and several zero discharge methods including contract hauling. If a discharge was listed as recycle and reuse, discharge to another process or rinse, or zero discharge or alternative disposal method, such as contract hauling, EPA did not use the discharge in developing the model PNF. Several sites often responded that discharges were split between discharge to treatment and zero discharge methods of disposal such as contract hauling, but did not provide the portion of flow going to each. In these cases, EPA accounted for all of the flow in model PNF development.

The Agency analyzed data from 219 WAPC devices (fume scrubbers) that were reported as being operated on acid pickling lines. After reviewing the 1997 industry survey data and comparing it to the data used to develop the 1982 rule, the Agency determined that the model flow rate of 15 gpm in the 1982 rule is still applicable.

The following tables list the model PNFs for carbon and alloy and stainless steel pickling operations. The Agency did not identify any sites that performed plate pickling operations on carbon and alloy steels. Consequently, the Agency transferred the model plate pickling flow rate from the Stainless Steel Segment to the carbon and alloy steel hydrochloric and sulfuric acid plate pickling manufacturing operations. Similarly, the Agency did not identify any sites that performed pipe and tube pickling operations on stainless steels, and, transferred the model specialty steel pipe and tube flow rate from the 1982 development document.

Carbon and Alloy Steel Hydrochloric Acid Pickling Model Flow Rates

Carbon and Alloy Hydrochloric Acid Pickling	Model PNF (gpt)	Operations Currently Operating at or Below the Model PNF	Number of Operations Analyzed
Strip, sheet	50	18	48
Bar, billet, rod, coil	490 (a)	1	1
Pipe, tube	1,020 (a)	2	3
Plate	35 (b)	N/A	0
Fume scrubber (gal/min)	15 (a)	8	14

(a) Value transferred from the 1982 development document.
(b) Value transferred from Stainless Steel Segment.

Carbon and Alloy Steel Sulfuric Acid Pickling Model Flow Rates

Carbon and Alloy Sulfuric Acid Pickling	Model PNF (gpt)	Operations Currently Operating at or Below the Model PNF	Number of Operations Analyzed
Strip, sheet	230	4	10
Bar, billet, rod, coil	280 (a)	2	7
Pipe, tube	500 (a)	1	1
Plate	35 (b)	N/A	0
Fume scrubber (gal/min)	15 (a)	34	60

(a) Value transferred from the 1982 development document.
(b) Value transferred from Stainless Steel Segment.

Stainless Steel Acid Pickling Model Flow Rates

Stainless Steel Acid Pickling	Model PNF (gpt)	Operations Currently Operating at or Below the Model PNF	Number of Operations Analyzed
Strip, sheet	700	19	50
Bar, billet, rod, coil	230 (a)	1	2
Pipe, tube	770 (a)	0	0
Plate	35	3	3
Fume scrubber (gal/min)	15 (a)	36	54

(a) Value transferred from 1982 development document.

EPA selected a model flow rate of 50 gpt for hydrochloric acid pickling of strip or sheet because 18 of the 48 process lines were demonstrating this model flow rate. The Agency selected a model flow rate below the median value of 79 gpt for hydrochloric acid pickling of strip and sheet, because the better performing mills are achieving this discharge rate. EPA selected 230 gpt as the model flow rate for sulfuric acid pickling of strip and sheet instead of the median PNF of 265 gpt. The Agency concluded that the selected flow rate roughly approximating, but slightly lower than, the median PNF is well demonstrated and achievable for all operations in the segment. The remaining model flow rates for hydrochloric acid pickling and sulfuric acid pickling were either transferred from the 1982 development document or from the Stainless Steel Segment (pickling).

EPA selected 700 gpt as the model flow rate for stainless steel acid pickling of strip and sheet instead of the median PNF of 874 gpt. The Agency considers the sites achieving the model flow rate (38 percent of the total) to be the better performing operations in this segment. EPA selected 35 gpt for stainless steel acid pickling of plate instead of the median of 33 gpt. Each of the sites that pickles plate was already achieving this flow rate and the Agency

determined that it would be cost-prohibitive to reduce the flow rate further. EPA transferred the remaining model flow rates for stainless steel acid pickling from the 1982 development document.

The Agency identified six zero discharge acid pickling lines during its analysis of the acid pickling subcategory. The Agency did not select zero discharge as the model flow for any of the acid pickling operations because sites would have to use options such as contract hauling of waste to achieve zero discharge. In addition, the Agency concluded that it was not feasible to achieve zero discharge on an industry-wide basis.

The Agency analyzed data from WAPC devices (e.g., absorber vent scrubbers) that acid regeneration operations reported operating. After reviewing the 1997 industry survey data and comparing it to the data used for the 1982 regulation, the Agency determined that the model flow rate of 100 gpm contained in the 1982 rule is still applicable.

13.8.2 Cold Forming

The Agency considered data from the 64 sites (integrated, non-integrated, stand-alone) that reported performing cold forming in their industry survey responses. Because some plants operate more than one cold forming operation, the total number of operations analyzed was 234. The Agency was unable to analyze data from two operations due to incomplete industry survey responses.

During the analysis, the Agency identified blowdown from the contact water and rolling solution systems as the primary source of wastewater. For the purposes of this manufacturing operation, the Agency made no distinction between contact spray water systems and rolling solution systems, which can include blowdown from roll and/or roll table spray cooling and product cooling. Other sources of wastewater included in the development of model PNFs were equipment cleaning water, wastewater from roll shops, and basement sumps.

The following table presents the selected model PNF, number of operations currently operating at the model PNF, and number of lines analyzed for carbon and alloy cold forming operations. Each of the selected model flow rates for carbon and alloy cold forming, except for single stand, recirculation, is slightly above the median PNF for each operation. EPA determined that it would be cost-prohibitive for all sites to achieve the median flow rate. For single stand, recirculation, EPA selected a flow rate below the median of 7 gpt. The Agency concluded that it was appropriate for single stand, recirculation, to have a lower flow rate than single stand, direct application. Therefore, EPA selected the model flow rate based on the three best performing mills in the category. The Agency did not select zero discharge as the model PNF for carbon and alloy cold forming operations because sites with a discharge from their recycle system(s) achieved zero discharge through either contract hauling or discharge to another process. The Agency concluded that contract hauling of waste is a not a universally applicable wastewater management approach and also recognizes that discharge to another process is not a viable option at all sites.

Carbon and Alloy Steel Cold Forming Model Flow Rates

Carbon and Alloy Cold Forming	Model PNF (gpt)	Operations Currently Operating at the Model PNF	Number of Operations Analyzed
Single stand, recirculation	1	3	18
Single stand, direct application	3	15	26
Multiple stand, recirculation	25	16	28
Multiple stand, direct application	275	11	19
Multiple stand, combination	143	5	8

The following table presents the selected model PNF, number of operations currently operating at the model PNF, and number of operations analyzed for stainless cold forming. The selected model flow rates for stainless cold forming are slightly above the median flow rates. EPA determined that it would be cost-prohibitive for all sites to achieve the median flow rate. The Agency did not select zero discharge as the model PNF for stainless steel cold forming operations for the reasons cited above. After reviewing the industry survey data, the Agency did not identify any sites operating multiple stand, direct application, or multiple stand, combination, rolling mills for stainless steels. The Agency transferred the model flow rates for these operations from the Carbon and Alloy Steel Segment, because of similarities in the manufacturing processes.

Stainless Steel Cold Forming Model Flow Rates

Stainless Steel Cold Forming	Model PNF (gpt)	Operations Currently Operating at the Model PNF	Number of Sites Reporting
Single stand, recirculation	3	7	13
Single stand, direct application	35	1	1
Multiple stand, recirculation	16	6	7
Multiple stand, direct application	275 (a)	N/A	0
Multiple stand, combination	143 (a)	N/A	0

(a) Value transferred from the Carbon and Alloy Steel Segment.
N/A = Not applicable.

13.8.3 Alkaline Cleaning

The Agency considered data from the 32 sites (integrated, non-integrated, and stand-alone) that indicated in their industry survey response that they performed alkaline cleaning operations on stand-alone process lines that do not have other processes such as pickling or coating. Because some plants operate more than one stand-alone alkaline cleaning operation, the total number of operations analyzed was 49. The Agency was unable to analyze data from one operation due to an incomplete survey response.

EPA has defined alkaline cleaning operations to include annealing operations on the same line; as a result, this segment includes both stand-alone alkaline cleaning lines and continuous annealing/alkaline cleaning lines. The Agency included annealing rinses, when present, in determining PNFs for the alkaline cleaning lines.

The primary sources of wastewater identified for alkaline cleaning operations were blowdown from the alkaline cleaning solution tanks and rinse water used to clean the alkaline cleaning solution from the steel. Other minor sources of wastewater included the following: rinse water from annealing operations (when operated with a water quench); runoff from raw material handling, preparation, and storage; tank clean-outs; and equipment cleaning and wash down water.

When developing the model PNF for alkaline cleaning, the Agency included all process wastewater flows that were conveyed to treatment. If a wastewater discharge was contract hauled or recycled and reused, the Agency did not include the flow in the development of the model PNF. If a site's industry survey response indicated that a flow was both contract hauled and discharged to treatment, but did not specify the portion of flow going to each, the Agency used the combined flow to develop the PNF. Each of the selected model flow rates for alkaline cleaning approximates the median flow rate.

EPA selected 320 gpt as the model PNF for alkaline cleaning of carbon and alloy steel strip and sheet. Twelve of the 24 lines reported PNFs of less than 320 gpt. None of these sites reported lines operating without a discharge.

EPA selected 20 gpt as the model PNF for alkaline cleaning of carbon and alloy steel pipe and tube. Four of the six sites reported lines with PNFs of less than or equal to 20 gpt. One site reported operating without a discharge by contract hauling its wastewater. The Agency did not select zero discharge as the model flow for alkaline cleaning of pipe and tube because sites would have to use disposal methods such as contract hauling to achieve zero discharge.

EPA selected 2,500 gpt as the model PNF for alkaline cleaning of stainless strip. Nine of the 15 sites reported lines with PNFs of less than or equal to 2,500 gpt. None of the sites reported operating without a discharge. The Agency did not identify any sites that practiced alkaline cleaning of stainless steel pipe and tube. EPA transferred the model pipe and tube flow rate of 20 gpt from the Carbon and Alloy Steel Segment.

13.8.4 Continuous Annealing

The Agency considered data from the 11 sites that indicated in their industry survey responses that they performed stand-alone continuous annealing operations (i.e., not on the same process line with operations such as alkaline cleaning or acid pickling). Because some sites operate more than one stand-alone continuous annealing operation, the total number of operations analyzed was 28. The Agency was unable to analyze data from two operations due to incomplete survey responses.

Stand-alone continuous annealing operations only include annealing operations that are not considered to be part of any other finishing line operated by the site. Annealing operations with a water quench that generate a discharge on acid pickling, cold forming, hot coating, alkaline cleaning, and electroplating lines are included in the model flow rate for these operations. Both the Carbon and Alloy Steel and Stainless Steel Segments have stand-alone continuous annealing operations that are divided into two categories: lines that do and lines that do not use water to quench the steel after the annealing process.

EPA selected 20 gpt (the median flow rate) as the model PNF for stand-alone continuous annealing with a water quench. Seven of the 14 lines with a water quench reported PNFs of less than or equal to 20 gpt. None of the sites reported operating without a discharge. Stand-alone continuous annealing lines that operate without a water quench do not generate process wastewater and have been designated as a zero-discharge operation.

13.8.5 Hot Coating

The Agency considered data from the 26 sites (integrated, non-integrated, and stand-alone) that indicated in their industry survey responses that they performed hot coating. Because some plants operate more than one hot coating line, the total number of lines analyzed was 40. The Agency was unable to analyze data from five lines due to incomplete survey responses. Hot coating operations are performed on carbon and alloy steels only. EPA has defined hot coating lines as including acid cleaning, annealing, alkaline cleaning, and other surface cleaning and preparation operations on the same line.

The primary source of wastewater from hot coating operations is the surface preparation operations, such as acid and alkaline cleaning, that the steel undergoes before hot coating. Four of the operations reported a discharge from their hot coating tanks. Thirty-two of the operations reported having a rinse following the coating operation. Tank clean-outs, fume scrubbers, and equipment cleaning are other sources of wastewater reported by a number of sites.

Wastewater Flow Rates

The Agency analyzed data from WAPC devices that were reported as being operated on hot coating lines. After reviewing the 1997 industry survey data and comparing it to the data used for the 1982 rule, the Agency determined that the model flow rate of 15 gpm contained in the 1982 rule is still applicable.

In developing the model PNF, the Agency only considered flow rates that were conveyed to treatment systems. When responding to the industry survey, sites had the option of indicating if they discharged process wastewater to treatment and/or disposed of it via several different zero discharge methods. If a site listed a zero discharge disposal method for a discharge, EPA did not use that discharge in the development of the model PNF. If a site's industry survey response indicated that a flow was both discharged to treatment and disposed of using a zero discharge method, but did not specify the portion of flow rate going to each, the Agency used the combined flow to develop the PNF.

EPA selected 550 gpt as the model PNF for hot coating operations. Twenty-eight of the 40 lines reported having PNFs of less than or equal to 550 gpt. Two of the lines reported operating without a discharge by using contract hauling. EPA determined that it would be cost-prohibitive for all sites to achieve the median PNF of 182 gpt. The Agency did not select zero discharge as the model flow for hot coating because sites would have to use disposal methods such as contract hauling to achieve zero discharge.

13.8.6 Electroplating

The Agency considered data from the 23 sites (integrated, non-integrated, and stand-alone) that indicated in their industry survey responses that they performed electroplating. Because some plants operate more than one electroplating line, the total number of operations analyzed was 44. The Agency was unable to analyze data from two operations due to incomplete survey responses. EPA has defined electroplating lines as annealing, alkaline cleaning, acid cleaning, and other surface cleaning and surface preparation operations on the same line.

The primary sources of wastewater from electroplating operations are acid and alkaline cleaning operations performed on the same process line, plating solution losses, and fume scrubbers. Tank clean-outs and equipment cleaning are other sources of wastewater reported by a number of sites.

The Agency analyzed data from WAPC devices that were reported as being operated on electroplating lines. After reviewing the 1997 industry survey data and comparing it to the data used for the 1982 regulation, the Agency determined that the model flow rate of 15 gpm contained in the 1982 effluent guidelines is still applicable.

In developing the model PNF, the Agency only considered flow rates that were conveyed to treatment systems. When responding to the industry survey, sites had the option of indicating whether they discharged their process wastewater to treatment and/or disposed of it via several different zero discharge disposal methods. If a site listed a zero discharge disposal method for discharge, EPA did not use that discharge in the development of the model PNF. If a site's industry survey response indicated that a flow was both discharged to treatment and disposed of using a zero discharge method, but did not specify the portion of flow going to each, the Agency used the combined flow to develop the PNF.

The model PNF for electroplating operations varies by the type of metal applied and the product type. The Agency chose a model PNF of 1,100 gpt for tin and chromium lines plating strip steel. Ten of the 20 lines reported PNFs equal to or less than 1,100 gpt. The Agency chose a model PNF of 550 gpt for lines plating strip steel with metals other than tin or chromium. Sixteen of the 20 lines reported PNFs equal to or less than 550 gpt. EPA determined that it would be cost-prohibitive for all sites to achieve the median PNF of 214 gpt. The Agency chose a model PNF of 35 gpt for electroplating of steel plate. Because the data for plate electroplating are confidential, they are not presented here. EPA concluded that the selected flow rates are achievable by well-operated electroplating operations.

13.9 Subpart G: Other Operations[3]

The subcategory the Agency proposes for other operations encompasses segments for direct-reduced ironmaking, forging, and briquetting.

13.9.1 Direct-Reduced Ironmaking (DRI) Segment

Three DRI plants provided industry survey data. One plant was operated at a non-integrated site and two were operated as stand-alone DRI sites. One plant began operations after 1997, but was considered for the development of the model flow rate. WAPC systems are the only reported process wastewater source for DRI operations. The WAPCs control furnace emissions and emissions from material handling and storage.

An evaluation of the three sites that conducted DRI operations found that they recycle scrubber wastewater. Based on the practice of wastewater recycle, the Agency selected a model PNF of 90 gpt; two of the three DRI plants are achieving this model flow rate.

13.9.2 Forging Segment

The Agency determined that forging operations are similar to other hot forming operations with respect to wastewater characteristics based on process considerations. Contact water and hydraulic system wastewater comprise most of the process wastewater from forging operations. Contact water is used for flume flushing, descaling, die spray cooling, and product quenching. Some sites identified equipment cleaning water and basements sumps as other sources of wastewater from forging operations.

EPA calculated PNFs for 15 forging operations based on available industry survey data. The Agency based its development of model treatment for forging operations on similar wastewater treatment for hot forming operations. As with hot forming, the Agency determined that wastewater treatment systems treating forging wastewaters demonstrate a recycle rate of 96 percent. High-rate recycle is a principle component of forging wastewater treatment and EPA used it to select a model flow rate. EPA selected a model PNF of 100 gpt for forging operations. This model flow rate is demonstrated at nine of the 15 forging operations that were analyzed.

13.9.3 Briquetting Segment

The Agency found that briquetting operations do not generate or discharge process wastewater. Therefore, the Agency has designated briquetting as a zero discharge operation.

[3]EPA did not perform a reanalysis of the model PNFs for this subcategory for the final rule, because it would not affect the Agency's final decision. This discussion reflects the analyses from proposal.

13.10 References

13-1 U.S. Environmental Protection Agency. Development Document for Effluent Guidelines and Standards for the Iron and Steel Manufacturing Point Source Category. Volume II. EPA 440/1-82/024, Washington, DC, May 1982.

13-2 U.S. Environmental Protection Agency. Development Document for Effluent Guidelines and Standards for the Iron and Steel Manufacturing Point Source Category. Volume I. EPA 440/1-82/024, Washington, DC, May 1982.

Table 13-1

Model PNF by Subcategory

Subcategory and Manufacturing Processes	Model PNF (gpt)
Cokemaking	
By-product recovery without biological control	113
By-product recovery with biological control	163
Non-recovery	0
Ironmaking	
Sintering with wet air pollution controls	75
Sintering with dry air pollution controls	0
Blast furnace ironmaking	25
Integrated Steelmaking	
Basic oxygen furnaces	
Semi-wet air pollution control	10
Wet-open air pollution control	86
Wet-suppressed air pollution control	22
Ladle metallurgy	0
Vacuum degassing	13
Continuous casting	25
Integrated and Stand-Alone Hot Forming	100
Non-Integrated Steelmaking and Hot Forming	
Electric arc furnaces	0
Ladle metallurgy	0
Vacuum degassing	10
Continuous casting	11
Hot forming	50
Combined thin slab casting and hot forming	120
Carbon and Alloy Hydrochloric Acid Pickling	
Strip, sheet	50
Bar, billet, rod, coil	490
Pipe, tube	1,020
Plate	35
Acid regeneration (gal/min)	100
Fume scrubber (gal/min)	15
Carbon and Alloy Sulfuric Acid Pickling	
Strip, sheet	230
Bar, billet, rod, coil	280
Pipe, tube	500
Plate	35
Fume scrubber (gal/min)	15

Table 13-1 (Continued)

Subcategory and Manufacturing Processes	Model PNF (gpt)
Stainless Steel Acid Pickling	
Strip, sheet	700
Bar, billet, rod, coil	230
Pipe, tube	770
Plate	35
Fume scrubber (gal/min)	15
Carbon and Alloy Cold Forming	
Single stand, recirculation	1
Single stand, direct application	3
Multiple stand, recirculation	25
Multiple stand, direct application	275
Multiple stand, combination	143
Stainless Steel Cold Forming	
Single stand, recirculation	3
Single stand, direct application	35
Multiple stand, recirculation	16
Multiple stand, direct application	275
Multiple stand, combination	143
Carbon and Alloy Alkaline Cleaning	
Strip, sheet	320
Pipe, tube	20
Stainless Steel Alkaline Cleaning	
Strip, sheet	2,500
Pipe, tube	20
Continuous Annealing	20
Hot Coating	
All types	550
Fume scrubber (gal/min)	15
Electroplating	
Tin/chrome - strip, sheet	1,100
Other metals - strip, sheet	550
Plate	35
Fume scrubber (gal/min)	15
Other Operations	
Direct-reduced ironmaking	90
Forging	100
Briquetting	0

SECTION 14

LIMITATIONS AND STANDARDS: DATA SELECTION AND CALCULATION

This section describes the data sources, data selection, data conventions, and statistical methodology used by EPA in calculating the long-term averages, variability factors, and limitations. The effluent limitations and standards[1] for cokemaking, sintering, and other operations subcategories and options are based on long-term average effluent values and variability factors that account for variation in treatment performance within a particular treatment technology over time.

Section 14.1 gives a brief overview of data sources (a more detailed discussion is provided in Section 3) and describes EPA's evaluation and selection of facility datasets that are the basis of the limitations. Section 14.2 provides a more detailed discussion of the selection of BAT facility datasets for cokemaking, sintering, and other operations subcategories and options. For those proposed subcategories that EPA decided not to revise, Sections 5.8 and 14.10 of the record contains descriptions of the development of long-term averages for pollutant removal analysis. Section 14.3 describes excluded and substituted data. Section 14.4 presents the procedures for data aggregation. Section 14.5 describes data editing criteria used to select episode datasets in calculating the long-term averages and limitations. Section 14.6 provides an overview of the limitations. Sections 14.7, 14.8, and 14.9 describe procedures for estimation of long-term averages, variability factors, and concentration-based limitations into the production-normalized limitations. Section 14.10 describes the procedures used to determine the concentration-based limitations for naphthalene for PSES. The attachments for Section 14 are provided in Appendix E.

14.1 Overview of Data Selection

To develop the long-term averages, variability factors, and limitations, EPA used wastewater data from facilities with components of the model technology for each subcategory and option. These data were collected from two sources, EPA's sampling episodes, herein referred to as "sampling episodes" and industry's self-monitoring data, herein referred to as "self-monitoring episodes." Because daily variability cannot be determined from summary data (e.g., monthly averages) as reported in the survey, EPA did not consider any facilities that provided only summary data. EPA qualitatively reviewed the data from the sampling and self-monitoring episodes and selected episodes to represent each option based on a review of the production processes and treatment technologies in place at each facility. EPA only used data from facilities that had some or all components of the model technologies for the option (model technologies for each option are described in Section 9).

Generally, if EPA selected data from a sampling episode, it also selected any self-monitoring episode data submitted from the same treatment system from the same facility. EPA's sampling episodes typically provided data for all of the regulated pollutants (see

[1]In the remainder of this chapter, references to 'limitations' includes 'standards.'

Section 12). In contrast, the industry self-monitoring data were only for a limited subset of pollutants (most facilities monitor only for pollutants specified in their permits). EPA analyzed the data from each episode separately in calculating the limitations. This is consistent with EPA's practice for other industrial categories. Data from different sources generally characterize different time periods and/or different chemical analytical methods. After proposal, EPA received comments questioning the validity of the above approach to keeping the episodes separate. For a more detailed discussion on the analysis EPA performed to address the comments, see Section 14.2.1 cokemaking discussion.

In developing the promulgated limitations, EPA generally used the self-monitoring data when they were measured by analytical methods specified in or approved under 40 CFR Part 136 that facilities are required to use for compliance monitoring. Section 4 describes all but one of the exceptions to this general rule. The remaining exception was EPA's exclusion of all industry self-monitoring data for oil and grease because facilities generally used methods which require freon, an ozone-depleting agent, as an extraction solvent. For the samples collected in its sampling episodes, EPA used a more recent method, Method 1664, which uses normal hexane (*n*-hexane) as the extraction solvent and measures oil and grease (O&G) as hexane extractable material (HEM). EPA developed the O&G limitations solely on the HEM measurements from Method 1664.

EPA received a number of comments on the ability of existing facilities to achieve both the long-term averages and the production-normalized flows (PNFs). The following paragraphs describe EPA's methodologies in selecting the BAT facilities and the datasets upon which the Agency based its long-term averages and its updated data editing procedures for long-term average and variability calculations. Section 14.2 provides more details about the BAT facility and dataset selection for each subcategory. For a discussion of PNFs, see Section 13 of this document.

First, EPA evaluated each dataset to determine what technology or series of technologies the data represented. In this manner, EPA eliminated many datasets because they did not represent a technology basis considered during development of this rule. In a few instances, EPA included data from facilities that employ technologies in addition to the technology bases being considered. In these cases, EPA had data from intermediate sampling points representing the model technologies; in other words, the data EPA employed reflected application of only the technologies under consideration. Next, EPA reviewed the remaining datasets to ensure that each facility was effectively operating its technologies. For example, EPA eliminated facilities that experienced repeated operating problems with their treatment systems or have discharge points located after addition of significant amounts (i.e., greater than 10 percent by volume) of non-process water.

For the datasets that remained, EPA performed a detailed review of the data and all supporting documentation accompanying the data. This includes both EPA sampling episodes and self-monitoring episodes. EPA performed this review to ensure that the selected data represent a treatment system's normal operating conditions and to ensure that the data accurately

reflect the performance expected by the BAT treatment systems. Thus, EPA excluded data that were collected while a facility was experiencing exceptional incidents or upsets.

After determining the datasets to be included to calculate long-term averages and variability for each technology option under consideration for the final rule, EPA applied further data editing criteria on a pollutant-by-pollutant basis. For facilities where EPA possessed paired influent and effluent data, it performed a long-term average test. The test looks at the influent concentrations to ensure a pollutant is present at sufficient concentration to evaluate treatment effectiveness. If a pollutant failed the test (i.e., was not present at a treatable concentration), EPA excluded the data for that pollutant at that facility from its long-term average and variability calculations. In this manner, EPA would ensure that its limitations resulted from treatment and not simply the absence of that pollutant in the wastestream. See Section 14.5 for a detailed discussion and Appendix C for the results of the LTA test. In many cases, however, industry supplied EPA with effluent data, but not the corresponding influent data. In these cases, EPA used the effluent data without performing a long-term average test. EPA decided to use these data for two reasons. First, EPA wanted to include as much data as possible in its calculations. Second, the vast majority of pollutants for which industry supplied self-monitoring data are pollutants regulated in the existing iron and steel regulation; EPA has already established the presence of the regulated pollutants in treatable levels in iron and steel wastestreams. Therefore, EPA is confident that these effluent data represent effective treatment and not the absence of the pollutant in the wastestream.

Finally, EPA reviewed the remaining data on a pollutant-by-pollutant basis to determine if any data values appeared to be unreasonable and suitable for possible exclusions. These exclusions, along with justifications, are described in detail in the next section. Sections 5.8 and 14.10 of the record describes the data exclusions for those proposed subcategories that EPA decided not to revise.

14.2 Episode Selection for Each Subcategory and Option

This section describes the data selected for each pollutant for each technology option in each subcategory. See Section 9 for those options for which EPA is proposing no discharge of process wastewater pollutants to waters of the United States.

In the following sections and the public record, EPA has masked the identity of the episodes and sampling points to protect confidential business information (CBI). EPA sampling episodes are identified as ESExx and the industry self-monitoring episodes as ISMxx where "xx" is a unique two-digit number assigned to each episode (for example, ESE01 and ISM51). The sampling points are identified with SP-c where "c" is a character (for example, SP-A). The daily data and sampling points corresponding to these episodes are listed in Appendix C. Attachment 14-1 in Appendix E provides summary statistics for all episodes, sorted by subcategory and option.

14.2.1 Cokemaking Subcategory

For the by-product recovery segment in the cokemaking subcategory, as described in the following subsections, EPA is promulgating limitations based on BAT-1 and PSES-1. The data for the BAT-1 option were used to calculate the limitations for direct dischargers. (The technical components for BAT-1 are the same as those for PSES-3.) The data from the PSES-1 options were used to calculate the standards for indirect dischargers.

BAT-1 (PSES-3)

The BAT-1 option technology was used as the basis for the limitations for direct dischargers in the by-product recovery segment. EPA determined that all but two of the direct-discharging facilities with processes in the by-product recovery segment have the model technology associated with the BAT-1 option, namely ammonia stripping and biological treatment with nitrification and secondary clarification. Of these facilities, EPA selected data from three facilities that met the criteria described in Section 14.1. DCN IS10816 in section 14.10 of the record discusses the facility selection process for the by-product recovery cokemaking segment in detail. The selected data were from two sampling episodes (ESE01 and ESE02) and two self-monitoring episodes (ISM50 and ISM51). All the selected facilities treat wastewater from by-product recovery operations as well as small amounts of ground water or control water added for biological treatment optimization. One sampling episode and self-monitoring episode were from the same facility. EPA analyzed the data from each episode separately in calculating the limitations in order to be consistent with the Agency's traditional practice for other industrial categories and because the two episodes were associated with different analytical methods for some pollutants (e.g., naphthalene). Of the four episodes, EPA further reviewed the data and applied the following data exclusions:

- **ESE01** – The facility's ammonia data were excluded completely because its influent concentrations during the five-day sampling event were abnormally and consistently low. EPA obtained more influent data from the plant and confirmed that the low levels of ammonia observed during the sampling event do not reflect the plant's normal raw wastewater characteristics. In addition, the facility's data for benzo(a)pyrene, O&G, and TSS were excluded due to LTA test (see Appendix C for test results).

- **ESE02** – The facility's data for TSS were excluded due to LTA test.

- **ISM50** - EPA excluded the ammonia data for the time periods of 1/22/96-3/26/96 and 12/23/96-1/14/97 because these data values were unusually high. Furthermore, plant personnel confirmed that the biological system was down during the above two time periods because of nitrifier upset. In addition, the Agency also excluded the ammonia data for the time period 9/10/00-10/31/00 because the detected values were abnormally high and the plant personnel confirmed that the facility's gas handling and chemical recovery system failed during that time period.

EPA excluded all benzo(a)pyrene data from this episode because of concerns about the analytical methods (see Section 4.4.15, DCNs IS07040 and IS07051 in Sections 8.4 and 8.5 of the proposal record). In addition, the Agency also excluded the O&G data from this episode because the facility did not use Method 1664.

- **ISM51** -- EPA excluded all the data dated after March 1, 1998 because the facility operated a treatment system different from the BAT-1 model technology starting from that date. As a result, the data from this facility were not used to develop the limits for benzo(a)pyrene, and naphthalene.

  In addition, EPA also excluded all the total cyanide data, as measured by SM4500. EPA excluded the first six of the eight data values, which were all reported as detected at the same value of 12 mg/L, due to concerns about the level of precision attained by the laboratory. Data are seldom reported at the same value unless they are non-detected or close to the lowest level that can be measured by the chemical analytical method, which in this case was 0.02 mg/L. EPA also excluded the last two of the eight data values (8 and 8.7 mg/L) because these were also measured by SM4500. EPA concluded that all results were probably unreliable from this method during the self-monitoring episode.

  Lastly, EPA excluded all TSS data from this episode because the facility discharged indirectly prior to March 1998. As a result, the facility's discharge limits for TSS prior to March 1998 would expected to be high because POTWs are specifically designed and operated to treat pollutants such as TSS.

In summary, the episodes selected for each regulated pollutant in the by-product recovery segment of the cokemaking subcategory are as follows:

- **Ammonia as Nitrogen** -- EPA had concentration data from one sampling episode ESE02, and two self-monitoring episodes (ISM50 and ISM51).

- **Benzo(a)pyrene** -- EPA used data from its sampling episode ESE02 to develop the promulgated limitations for BAT-1.

- **Naphthalene** -- EPA calculated the limitations using the data from episodes ESE01, ESE02, and ISM50.

- **Phenols (4AAP)** -- EPA used data from all four episodes.

- **Total Cyanide** -- For the total cyanide standards, EPA used data from one facility, representing sampling episode (ESE01) and one self-monitoring episode (ISM50), to establish the limits. EPA did this to address

commenters' concern that the total cyanide limits are not achievable. This facility demonstrated the highest influent concentration of total cyanide. Therefore, EPA concluded that if this facility can achieve the limit, then the other facilities should be able to do the same. See DCN IS10884 in Section 14.10 of the rulemaking record for a more detailed discussion.

- **O&G** – For new direct dischargers, EPA used concentration data from its sampling episode (ESE02) for O&G measured as HEM. As explained in Section 14.1, industry did not measure O&G as HEM and thus none of the self-monitoring episodes were included in calculating the O&G limitations.

- **TSS** -- For new direct dischargers, EPA used concentration data from one self-monitoring episode (ISM50).

PSES-1

The PSES-1 option technology (mainly ammonia stripping) was used as the basis for the limitations for indirect dischargers. Eight facilities (corresponding to eight episodes) had the PSES-1 option technology. Of these facilities, EPA selected data from three facilities that met the criteria described in Section 14.1. DCN IS10816 in Section 14.10 of the rulemaking record discusses the facility selection process for the by-product recovery cokemaking segment in detail. Two of these episodes were EPA sampling episodes (ESE01 and ESE02) and one was self-monitoring episode (ISM54). EPA also included total cyanide data from ISM50 because the facility submitted three years of daily total cyanide measurements representing PSES-1 technology. None of the facilities commingled cokemaking wastewater with wastewater from other subcategories.

The direct dischargers represented in the two sampling episodes had employed the model technology that was the basis for the pretreatment standards. EPA used their data to calculate the pretreatment standards in conjunction with data from the indirect discharger (ISM54). EPA used data from these direct discharging facilities because EPA had data from intermediate sampling points representing the PSES-1 model technologies. However, for ammonia as nitrogen, EPA did not use data from ESE01 and ESE02 because the effluent at the intermediate sampling points, i.e., after ammonia still and before biological treatment, would not realistically represent effluent from an indirect discharger. Since biological treatment provides additional removal of ammonia, facilities with add-on biological treatment tend not to remove ammonia completely in the ammonia stripping step. As a result, EPA used the data from the indirect discharger (ISM54) to calculate the PSES-1 pretreatment standards for ammonia as nitrogen.

For total cyanide, EPA used data from ISM50. See the total cyanide discussion in the BAT-1 section. EPA excluded the total cyanide data for 2/04/99 because it was at least two orders of magnitude higher than the rest of the data, which represented five years worth of self-monitoring. Plant personnel suspected that the value is a typographical error.

For naphthalene, EPA used all three sampling episodes to develop the proposed pretreatment standards.

14.2.2 Sintering Subcategory

In October 2000, EPA proposed combining the sintering and ironmaking subcategories from the 1982 regulation into a single subcategory to be known as ironmaking, with a single technology basis. With the exception of cooling towers, which apply to blast furnace operations only, EPA considered the same technologies for both segments. The basis for the proposed ironmaking limits and standards for the sintering segment with wet air pollution control system was: *solids removal with high-rate recycle and metals precipitation, alkaline chlorination, and mixed media filtration of blowdown wastewater.* This was known as Ironmaking BAT1. Since EPA has determined that BAT1 is not the best achievable technology for ironmaking (and, subsequently, sintering) operations (see preamble Section VIII.B). EPA has also concluded that it is unnecessary to combine the two 1982 subcategories into a single subcategory as proposed, because the final rule is not changing the 1982 limits and standards except as noted below.

In the final rule, EPA promulgated an effluent limitation guideline and standard for one parameter, 2,3,7,8-TCDF, for sintering operations with wet air pollution control, and left unchanged the 1982 limits and standards for all other parameters in the sintering and ironmaking subcategories. EPA chose to use 2,3,7,8-TCDF as an indicator parameter for the whole family of dioxin/furan congeners for several reasons. First, 2,3,7,8-TCDF is the most toxic of the congeners found in treated sintering wastewater. Second, 2,3,7,8-TCDF was one of the most prevalent of the dioxin/furan congeners in these wastewaters. Finally, 2,3,7,8-TCDF is chemically similar to the other dioxin/furan congeners and its removal will similarly indicate removal of the other congeners.

The technology basis for new TCDF limitations and standards for the sintering subcategory remains unchanged from the proposal, which is the same as the technology basis for the 1982 regulations except for the addition of multimedia filtration. During four EPA sampling episodes, several of these congeners were found in both the raw and treated wastewater from sinter plants operating wet air pollution control technologies. Although none of the sampled facilities has this technology in place, EPA concludes that multimedia filtration will result in the removal of this congener, and thus all the dioxin/furan congeners, below the minimum level specified in Method 1613, because dioxins and furans are hydrophobic compounds, meaning they tend to adhere to solids present in a solution. Thus removal of the solids, which is accomplished by multimedia filtration, will result in removal of the dioxins/furans adhering to them as well. Furthermore, EPA has data from two sampling episodes at sinter plants demonstrating that filtration of wastewater samples containing dioxins and furans at treatable levels will reduce their concentrations to non-detectable levels (see DCN IS10853 in Section 14.10 of the rulemaking record for more information). This is true even for raw wastewater that has undergone no other treatment. As a result, the TCDF limit is expressed as "<ML," which means less than the minimum level.

EPA is also promulgating, as proposed, a provision that the total recoverable chlorine (TRC) BAT limitations or NSPS promulgated in 1982 apply only when sintering process wastewater is chlorinated.

For indirect dischargers, sintering facilities discharging to POTWs with nitrification capability would not be subject to the pretreatment standard for ammonia-N.

EPA is leaving unchanged all limitations currently in effect for the ironmaking subcategory, except to delete the limitations for the obsolete ferromanganese blast furnaces. EPA had proposed limits and standards for 2,3,7,8-TCDF for the ironmaking subcategory, but it was to apply only to facilities that combined their blast furnace and sintering wastewater. 2,3,7,8-TCDF was not found in the blast furnace wastewater. Facilities with combined blast furnace and sintering wastewater recycling systems may monitor for 2,3,7,8-TCDF after these two waste streams are combined to ensure compliance, but before commingling with wastewaters other than sintering or blast furnace wastewater. See Section 16.8.3 for more information regarding the compliance monitoring location and an exception which allows commingling with wastewaters other than sintering or blast furnace wastewater. By preserving the 1982 subcategorization scheme and promulgating limits and standards for the compound in the sintering subcategory, EPA has addressed this issue, and is therefore not promulgating limits and standards for 2,3,7,8-TCDF for the ironmaking subcategory.

14.2.3 Other Operations

The other operations subcategory has three segments: the direct-reduced ironmaking (DRI) segment, the forging segment, and the briquetting segment. For the briquetting segment, EPA is promulgating *no discharge of process wastewater pollutants to waters of the United States* as discussed in Section 9. The next two subsections describe the data used to calculate the limitations for the remaining two segments.

Direct-Reduced Ironmaking

The DRI_BPT option technology is the basis for the limitations for the direct dischargers in the direct-reduced ironmaking segment of the other operations subcategory. EPA selected data from one facility that had the model technology for TSS (and met the criteria in Section 14.1), which is the only regulated pollutant in this segment. This treatment system treats water only from direct-reduced ironmaking processes (a small amount of storm water and equipment cleaning water is also treated in the treatment system). For this facility, EPA had data from one sampling episode (ESE10) and one self-monitoring episode (ISM65) that it used to calculate the limitations for TSS. EPA included all of these data in calculating the TSS limitations. O&G (measured by HEM) data from ESE10 were excluded from pollutant removal evaluation because of LTA test.

Forging

For the forging segment, EPA promulgated limitations for O&G and TSS for direct dischargers. EPA did not sample forging operations or obtain any forging self-monitoring data from facilities with the model technology. Because EPA has determined that the characteristics of forging operation wastewater are similar to hot forming operation wastewater, EPA transferred the limitations from both segments of the Integrated and Stand-Alone Hot Forming Subcategory. The facilities used to develop the limits are ESE04, ESE07, and ESE09. Because, depending on the materials used, the forging operations can create wastestreams similar to either of the hot forming segments, EPA transferred the data from the two segments. For ESE04, O&G and TSS data did not pass the LTA test and they were not included in the limits development.

14.3 Data Exclusions and Substitutions

In some cases, EPA did not use all of the data described in Section 14.2 in calculating the limitations. Other than the data exclusions and substitutions described in this section and those resulting from the data editing procedures, EPA has used the data from the episodes and sampling points presented in Appendix C.

In general, EPA used the reported measured value or sample-specific detection limit in its calculations. However, there were instances where EPA substituted baseline values (defined in Section 4) for reported values. In this case, EPA compared each laboratory-reported sample result to a baseline value. In some situations, EPA substituted a larger value for the measured value or sample-specific detection limit. This substitution is described in Sections 4.4.1 and 4.5.1. Appendix C and the minimums and maximums provided in Attachment 14-1 in Appendix E list the data before these substitutions.

14.4 Data Aggregation

In some cases, EPA determined that two or more samples had to be mathematically aggregated to obtain a single value that could be used in other calculations. In some cases, this meant that field duplicates and grab samples were aggregated for a single sampling point. In addition, for one facility, data were aggregated to obtain a single daily value representing the facility's effluent from multiple outfalls. Appendix C lists the data after these aggregations were completed and a single daily value was obtained for each day for each pollutant.

In all aggregation procedures, EPA considered the censoring type associated with the data. EPA considered measured values to be detected. In statistical terms, the censoring type for such data was 'non-censored' (NC). Measurements reported as being less than some sample-specific detection limit (e.g., <10 mg/L) were censored and were considered to be non-detected

(ND). In the tables and data listings in this document and the record for the rulemaking, EPA has used the abbreviations NC and ND to indicate the censoring types.[2]

The distinction between the two censoring types is important because the procedure used to determine the variability factors considers censoring type explicitly. This estimation procedure modeled the facility datasets using the modified delta-lognormal distribution. In this distribution, data are modeled as a mixture of two distributions. Thus, EPA concluded that the distinctions between detected and non-detected measurements were important and should be an integral part of any data aggregation procedure. (See Appendix B for a detailed discussion of the modified delta-lognormal distribution.)

Because each aggregated data value entered into the modified delta-lognormal model as a single value, the censoring type associated with that value was also important. In many cases, a single aggregated value was created from unaggregated data that were all either detected or non-detected. In the remaining cases with a mixture of detected and non-detected unaggregated values, EPA determined that the resulting aggregated value should be considered to be detected because the pollutant was measured at detectable levels.

This section describes each of the different aggregation procedures. They are presented in the order that the aggregation was performed. That is, field duplicates were aggregated first, grab samples second, and finally multiple outfalls.

14.4.1 Aggregation of Field Duplicates

During the EPA sampling episodes, EPA collected a small number of field duplicates. Generally, ten percent of the number of samples collected were duplicated. Field duplicates are two samples collected for the same sampling point at approximately the same time, assigned different sample numbers, and flagged as duplicates for a single sampling point at a facility.

Because the analytical data from each duplicate pair characterize the same conditions at that time at a single sampling point, EPA aggregated the data to obtain one data value for those conditions. The data value associated with those conditions was the arithmetic average of the duplicate pair.

In most cases, both duplicates in a pair had the same censoring type. In these cases, the censoring type of the aggregate was the same as the duplicates. In the remaining cases, one duplicate was a non-censored value and the other duplicate was a non-detected value. In these cases, EPA determined that the appropriate censoring type of the aggregate was 'non-censored' because the pollutant had been present in one sample. (Even if the other

[2]Laboratories can also report numerical results for specific pollutants detected in the samples as "right-censored." Right-censored measurements are those that are reported as being greater than the highest calibration value of the analysis (e.g., >1000 μg/L). None of the data used in calculating the limitations included any right-censored data.

duplicate had a zero value[3], the pollutant still would have been present if the samples had been physically combined.) Table 14-1 summarizes the procedure for aggregating the analytical results from the field duplicates. This aggregation step for the duplicate pairs was the first step in the aggregation procedures for both influent and effluent measurements.

14.4.2 Aggregation of Grab Samples

During the EPA sampling episodes, EPA collected two types of samples: grab and composite. Typically, EPA collected composite samples. Of the pollutants promulgated for regulation, O&G was the only one for which the chemical analytical method specifies that grab samples must be used. For O&G, EPA collected multiple (usually four) grab samples during a sampling day at a sampling point. To obtain one value characterizing the pollutant levels at the sampling point on a single day, EPA mathematically aggregated the measurements from the grab samples.

The procedure arithmetically averaged the measurements to obtain a single value for the day. When one or more measurements were non-censored, EPA determined that the appropriate censoring type of the aggregate was 'non-censored' because the pollutant was present. Table 14-2 summarizes the procedure.

14.4.3 Aggregation of Data Across Outfalls ("Flow-Weighting")

After field duplicates and grab samples were aggregated, the data were further aggregated across sampling points for different outfalls. This step was necessary for the facilities where data from multiple sampling points were aggregated to obtain a single daily value representing the episode's effluent from multiple outfalls. In aggregating values across sampling points, if one or more of the values were non-censored, then the aggregated result was non-censored (because the pollutant was present in at least one stream). When all of the values were non-detected, then the aggregated result was considered to be non-detected. The procedure for aggregating data across streams is summarized in Table 14-3. The following example demonstrates the procedure for hypothetical pollutant X at an episode with three outfalls all from the model technology on day 1 of the sampling episode.

Example of calculating an aggregated flow-weighted value:

Day	Sampling Point	Flow (gal)	Concentration (µg/L)	Censoring
1	SP-A	10,000,000	10	ND
1	SP-B	20,000,000	50	NC
1	SP-C	5,000,000	100	ND

[3]This is presented as a 'worst-case' scenario. In practice, the laboratories cannot measure 'zero' values. Rather they report that the value is less than some level (see Section 4).

Calculation to obtain aggregated, flow-weighted value:

$$\frac{(10{,}000{,}000\ \text{gal} \times 10\ \mu g/L) + (20{,}000{,}000\ \text{gal} \times 50\ \mu g/L) + (5{,}000{,}000\ \text{gal} \times 100\ \mu g/L)}{10{,}000{,}000\ \text{gal} + 20{,}000{,}000\ \text{gal} + 5{,}000{,}000\ \text{gal}} = 45.7\ \mu g/L \qquad (14\text{-}1)$$

Because one of the three values was non-censored, the aggregated value of 45.7 µg/L is non-censored.

14.5 Data Editing Criteria

After excluding some data and aggregating the data, EPA applied data editing criteria to select episode datasets to be used in calculating the long-term averages and limitations. This criteria was specified by the 'long-term average test' (or LTA test).

EPA established the long-term average test to ensure that the pollutants were present in the influent at sufficient concentrations to evaluate treatment effectiveness during the episode. After the data aggregation, EPA compared the daily values of influent and their long-term average to the baseline value described in Section 4. The influent had to pass a basic requirement and one of the following two steps to pass the LTA test:

Step 1. At least 50% of the influent measurements in an episode were detected at the levels that are any value equal to or greater than 10 times the baseline value (defined in Section 4).

Step 2. At least 50% of the influent measurements in an episode were detected and the episode influent LTA was equal to or greater than 10 times the baseline value (defined in Section 4).

When the dataset at an episode failed both steps, EPA excluded the effluent data for the episode in calculating the long-term averages, variability factors, and limitations for the corresponding option in the subcategory. In this manner, EPA would ensure that its limitations resulted from treatment and not simply the absence of that pollutant in the wastestream.

If influent data were unavailable for the episode, the effluent data were assumed to pass the LTA test. EPA decided to use these data for two reasons. First, EPA wanted to include as much data as possible in its calculations. Second, the vast majority of pollutants for which industry supplied self-monitoring data are pollutants regulated in the existing iron and steel regulation; EPA has already established the presence of the regulated pollutants in treatable levels in iron and steel wastestreams. Therefore, EPA is confident that these effluent data represent effective treatment and not the absence of the pollutant in the wastestream. See Appendix C for the results of the LTA test.

14.6 Overview of Limitations

The preceding sections discuss the data selected as the basis for the limitations and the data aggregation procedures EPA used to obtain daily values in its calculations. This section provides a general overview of limitations before returning to the development of the limitations for the iron and steel industry. This section describes EPA's objective for daily maximum and monthly average limitations, the selection of percentiles for those limitations, and compliance with final limitations. EPA has included this discussion in Section 14 because these fundamental concepts are often the subject of comments on EPA's effluent guidelines regulations and in EPA's contacts and correspondence with the iron and steel industry.

14.6.1 Objective

In establishing daily maximum limitations, EPA's objective is to restrict the discharges on a daily basis at a level that is achievable for a facility that targets its treatment at the long-term average. EPA acknowledges that variability around the long-term average results from normal operations. This variability means that occasionally facilities may discharge at a level that is greater than the long-term average. This variability also means that facilities may occasionally discharge at a level that is considerably lower than the long-term average. To allow for these possibly higher daily discharges, EPA has established the daily maximum limitation. A facility that discharges consistently at a level near the daily maximum limitation would not be operating its treatment to achieve the long-term average, which is part of EPA's objective in establishing the daily maximum limitations. That is, targeting treatment to achieve the limitations may result in frequent values exceeding the limitations due to routine variability in treated effluent.

In establishing monthly average limitations, EPA's objective is to provide an additional restriction to help ensure that facilities target their average discharges to achieve the long-term average. The monthly average limitation requires continuous dischargers to provide on-going control, on a monthly basis, that complements controls imposed by the daily maximum limitation. In order to meet the monthly average limitation, a facility must counterbalance a value near the daily maximum limitation with one or more values well below the daily maximum limitation. To achieve compliance, these values must result in a monthly average value at or below the monthly average limitation.

14.6.2 Selection of Percentiles

EPA calculates limitations based upon percentiles chosen with the intention, on one hand, to be high enough to accommodate reasonably anticipated variability within control of the facility and, on the other hand, to be low enough to reflect a level of performance consistent with the Clean Water Act requirement that these effluent limitations be based on the "best" technologies. The daily maximum limitation is an estimate of the 99th percentile of the distribution of the *daily* measurements. The monthly average limitation is an estimate of the 95th percentile of the distribution of the *monthly* averages of the daily measurements.

The 99th and 95th percentiles do not relate to, or specify, the percentage of time a discharger operating the "best available" or "best available demonstrated" level of technology will meet (or not meet) the limitations. Rather, the use of these percentiles relate to the development of limitations. (The percentiles used as a basis for the limitations are calculated using the products of the long-term averages and the variability factors as explained in the next section.) If a facility is designed and operated to achieve the long-term average on a consistent basis and the facility maintains adequate control of its processes and treatment systems, the allowance for variability provided in the limitations is sufficient to meet the requirements of the rule. The use of 99 percent and 95 percent represents a need to draw a line at a definite point in the statistical distributions (100 percent is not feasible because it represents an infinitely large value) and a policy judgment about where to draw the line that would ensure that operators work hard to establish and maintain the appropriate level of control. In essence, in developing the limitations, EPA has taken into account the reasonable anticipated variability in discharges that may occur at a well-operated facility. By targeting its treatment at the long-term average, a well-operated facility should be capable of complying with the limitations at all times because EPA has incorporated an appropriate allowance for variability into the limitations.

In conjunction with the statistical methods, EPA performs an engineering review to verify that the limitations are reasonable based upon the design and expected operation of the control technologies and the facility process conditions. As part of that review, EPA examines the range of performance by the facility datasets used to calculate the limitations. Some facility datasets demonstrate the best available technology. Other facility datasets may demonstrate the same technology, but not the best demonstrated design and operating conditions for that technology. For these facilities, EPA will evaluate the degree to which the facility can upgrade its design, operating, and maintenance conditions to meet the limitations. If such upgrades are not possible, then the limitations are modified to reflect the lowest levels that the technologies can reasonably be expected to achieve.

14.6.3 Compliance with Limitations

EPA promulgates limitations that facilities are capable of complying with at all times by properly operating and maintaining their processes and treatment technologies. However, the issue of exceedances or excursions (i.e., values that exceed the limitations) is often raised by comments on limitations. For example, comments often suggest that EPA include a provision that a facility is in compliance with permit limitations if its discharge does not exceed the specified limitations, with the exception that the discharge may exceed the monthly average limitations one month out of 20 and the daily average limitations one day out of 100. This issue was, in fact, raised in other rules, including EPA's final Organic Chemicals, Plastics, and Synthetic Fibers (OCPSF) rulemaking. EPA's general approach there for developing limitations based on percentiles is the same in this rule, and was upheld in Chemical Manufacturers Association v. U.S. Environmental Protection Agency, 870 F.2d 177, 230 (5th Cir. 1989). The Court determined that:

> EPA reasonably concluded that the data points exceeding the 99th and 95th percentiles represent either quality-control problems or upsets because there can

> be no other explanation for these isolated and extremely high discharges. If these data points result from quality-control problems, the exceedances they represent are within the control of the plant. If, however, the data points represent exceedances beyond the control of the industry, the upset defense is available. Id. at 230.

More recently, this issue was raised in EPA's Phase I rule for the pulp and paper industry. In that rulemaking, EPA used the same general approach for developing limitations based on percentiles that it had used for the OCPSF rulemaking and for today's rule. This approach for the monthly average limitation was upheld in National Wildlife Federation, et al v. Environmental Protection Agency, No. 99-1452, Slip Op. at Section III.D (D.C. Cir.) (April 19, 2002). The Court determined that:

> EPA's approach to developing monthly limitations was reasonable. It established limitations based on percentiles achieved by facilities using well-operated and controlled processes and treatment systems. It is therefore reasonable for EPA to conclude that measurements above the limitations are due to either upset conditions or deficiencies in process and treatment system maintenance and operation. EPA has included an affirmative defense that is available to mills that exceed limitations due to an unforeseen event. EPA reasonably concluded that other exceedances would be the result of design or operational deficiencies. EPA rejected Industry Petitioners' claim that facilities are expected to operate processes and treatment systems so as to violate the limitations at some pre-set rate. EPA explained that the statistical methodology was used as a framework to establish the limitations based on percentiles. These limitations were never intended to have the rigid probabilistic interpretation that Industry Petitioners have adopted. Therefore, we reject Industry Petitioners' challenge to the effluent limitations.

As that Court recognized, EPA's allowance for reasonably anticipated variability in its effluent limitations, coupled with the availability of the upset defense, reasonably accommodates acceptable excursions. Any further excursion allowances would go beyond the reasonable accommodation of variability and would jeopardize the effective control of pollutant discharges on a consistent basis and/or bog down administrative and enforcement proceedings in detailed fact finding exercises, contrary to Congressional intent. See, e.g., Rep. No. 92-414, 92d Congress, 2d Sess. 64, reprinted in A Legislative History of the Water Pollution Control Act Amendments of 1972 at 1482; Legislative History of the Clean Water Act of 1977 at 464-65.

EPA recognizes that the preceding discussion is inconsistent with Appendix A in two of the development documents for the 1982 rule. (The same appendix is attached to both documents.) This appendix incorrectly implies that EPA condones periodic violations of monthly average limitations in its statement that

> . . . it would be expected that 95 percent of the randomly observed 30-day average values from a treatment system discharging the pollutant at a known mean concentration will fall below this bound. Thus, a well operated plant would be

expected, on the average, to incur approximately one violation of the 30-day average limitation during a 20 month period.

This statement does not accurately reflect EPA's interpretation of its 1982 regulations, nor of today's limitations. Rather, EPA expects that facilities will comply with promulgated limitations *at all times*. If the exceedance is caused by an upset condition, the facility would have an affirmative defense to an enforcement action if the requirements of 40 CFR 122.41(n) are met. If the exceedance is caused by a design or operational deficiency, then EPA has determined that the facility's performance does not represent the appropriate level of control (best available technology for existing sources; best available demonstrated technology for new sources). For promulgated limitations and standards, EPA has determined that such exceedances can be controlled by diligent process and wastewater treatment system operational practices such as frequent inspection and repair of equipment, use of back-up systems, and operator training and performance evaluations.

14.7 Summary of the Limitations

The limitations for pollutants for each option are provided as 'daily maximums' and 'maximums for monthly averages' (except for pH as described below). Definitions provided in 40 CFR 122.2 state that the daily maximum limitation is the "highest allowable 'daily discharge'" and the maximum for monthly average limitation (also referred to as the "average monthly discharge limitation") is the "highest allowable average of 'daily discharges' over a calendar month, calculated as the sum of all 'daily discharges' measured during a calendar month divided by the number of 'daily discharges' measured during that month." Daily discharges are defined to be the "'discharge of a pollutant' measured during a calendar day or any 24-hour period that reasonably represents the calendar day for purposes of sampling."

EPA has calculated four types of limitations for the iron and steel industry as follows:

Type 1: Daily maximum and monthly average limitations expressed in terms of allowable pollutant discharge (pounds) per unit of production (short tons). Most of the limitations are of this type.

Type 2: The limitations for pH are specified as a range of values between 6 and 9. The limitations are discussed in Section 14.3 of the rulemaking record at DCN IS10885.

Type 3: Daily maximum limitations for 2,3,7,8-tetrachlorodibenzo-furan (TCDF) are expressed as less than the minimum level ("<ML") or ten parts per quadrillion using the analytical method for TCDF specified in 40 CFR 420.21(c). These limitations are specified as daily maximums for the Sintering Subcategory. EPA has not promulgated monthly average limitations for this pollutant because EPA assumed that facilities will monitor for this pollutant only

once a month. EPA believes that a monthly monitoring frequency is reasonable because 12 data points for 2,3,7,8-TCDF each year will yield a meaningful basis for establishing compliance with the promulgated 2,3,7,8-TCDF limitations and standards by presenting long-term trends and short-term variability in 2,3,7,8-TCDF.

Type 4: For certain processes and discharge types (that is, some new sources and indirect dischargers), EPA has determined that there shall be *no discharge of process wastewater pollutants to waters of the United States.* This requirement is discussed in Section 13.

The remainder of Section 14 mainly describes the development of the limitations corresponding to Type 1. In this document and elsewhere, EPA refers to such limitations as 'production-normalized.' EPA has promulgated production-normalized limitations in terms of daily maximums and maximum for monthly averages for all pollutants.

To derive the production-normalization limitations, EPA used the modified delta-lognormal distribution to develop limitations based upon the concentration data ("concentration-based limitations"). Section 14.8 describes the calculations for the concentration-based limitations. Section 14.9 describes the conversion of these limitations to "production-normalized limitations" using the model flow rates described in Section 13.

14.8 Estimation of Concentration-Based Limitations

In estimating the concentration-based limitations, EPA determines an average performance level (the "option long-term average" discussed in the next section) that a facility with well-designed and operated model technologies (which reflect the appropriate level of control) is capable of achieving. This long-term average is calculated from the data from the facilities using the model technologies for the option. EPA expects that all facilities subject to the limitations will design and operate their treatment systems to achieve the long-term average performance level on a consistent basis because facilities with well-designed and operated model technologies have demonstrated that this can be done.

In the second step of developing a limitation, EPA determines an allowance for the variation in pollutant concentrations when processed through extensive and well-designed treatment systems. This allowance for variance incorporates all components of variability including shipping, sampling, storage, and analytical variability. This allowance is incorporated into the limitations through the use of the variability factors which are calculated from the data from the facilities using the model technologies. If a facility operates its treatment system to meet the relevant long-term average, EPA expects the facility will be able to meet the limitations. Variability factors assure that normal fluctuations in a facility's treatment are accounted for in the limitations. By accounting for these reasonable excursions above the long-term average, EPA's use of variability factors results in limitations that are generally well above the actual long-term averages.

Facilities that are designed and operated to achieve long-term average effluent levels used in developing the limitation should be capable of compliance with the limitations, which incorporate variability, at all times.

After the proposal, EPA incorporated adjustments for autocorrelation into the limitations for some pollutants. When data are said to be positively autocorrelated, it means that measurements taken at specific time intervals (such as 1 day or 2 weeks apart) are related. To determine if autocorrelation exists in the data, a statistical evaluation is required using many measurements for equally spaced intervals over an extended period of time. Where such data were available for the final rule, EPA performed a statistical evaluation of autocorrelation and if necessary provided adjustments to the limitations as explained in DCN IS12033 in Section 16.4 of the record. As a result of its evaluation of autocorrelation, EPA determined that adjustments should be incorporated into the limitations for total cyanide and ammonia as nitrogen for the cokemaking by-product recovery segment. EPA was only able to evaluate the autocorrelation in some datasets selected as the basis for the limitations for those pollutants. Where a dataset was insufficient for purposes of evaluating autocorrelation, EPA transferred the values it used in the adjustment ("rho values") as shown in Attachments 14-5 and 14-6 in Appendix E. These autocorrelation adjustments resulted in higher limitations for total cyanide and ammonia as nitrogen. Appendix B explains autocorrelation and the adjustments for these limitations in further detail. DCN IS12033 describes EPA's evaluation of autocorrelation in the episode datasets.

The following sections describe the calculation of the option long-term averages and option variability factors.

14.8.1 Calculation of Option Long-Term Averages

This section discusses the calculation of long-term averages by episode ("episode-specific long-term average") and by option ("option long-term average") for each pollutant. These long-term averages discussed in this section were used to calculate the limitations and as the option long-term averages for the pollutants of concern.

First, EPA calculated the episode-specific long-term average by using either the modified delta-lognormal distribution or the arithmetic average (see Appendix B). In Attachment 14-2 in Appendix E, EPA has listed the arithmetic average (column labeled 'Obs Mean') and the estimated episode-specific long-term average (column labeled 'Est LTA'). If EPA used the arithmetic average as the episode long-term average, then the two columns have the same value.

Second, EPA calculated the option long-term average for a pollutant as the *median* of the episode-specific long-term averages for that pollutant from selected episodes with the technology basis for the option (see Sections 14.1 and 14.2). The median is the midpoint of the values ordered (i.e., ranked) from smallest to largest. If there is an odd number of values (with n=number of values), then the value of the (n+1)/2 ordered observation is the median. If

there are an even number of values, then the two values of the n/2 and [(n/2)+1] ordered observations are arithmetically averaged to obtain the median value.

For example, for subcategory Y option Z, if the four (i.e., n=4) episode-specific long-term averages for pollutant X are:

Facility	Episode-Specific Long-Term Average
A	20 mg/l
B	9 mg/l
C	16 mg/l
D	10 mg/l

then the ordered values are:

Order	Facility	Episode-Specific Long-Term Average
1	A	9 mg/l
2	B	10 mg/l
3	C	16 mg/l
4	D	20 mg/l

And the pollutant-specific long-term average for option Z is the median of the ordered values (i.e., the average of the 2nd and 3rd ordered values): (10+16)/2 mg/l = 13 mg/l.

The option long-term averages were used in developing the limitations for each pollutant within each regulatory option.

14.8.2 Calculation of Option Variability Factors

In developing the option variability factors used in calculating the limitations, EPA first developed daily and monthly episode-specific variability factors using the modified delta-lognormal distribution. This estimation procedure is described in Appendix B. Attachment 14-2 in Appendix E lists the episode-specific variability factors.

After calculating the episode-specific variability factors, EPA calculated the option daily variability factor as the *mean* of the episode-specific daily variability factors for that pollutant in the subcategory and option. Likewise, the option monthly variability factor was the mean of the episode-specific monthly variability factors for that pollutant in the subcategory and option. Attachment 14-3 in Appendix E lists the option variability factors.

14.8.3 Transfers of Option Variability Factors

After estimating the option variability factors, EPA identified several pollutants for which variability factors could not be calculated in some options. This resulted when all

episode datasets for the pollutant in the option had too few detected measurements to calculate episode-specific variability factors (see data requirements in Appendix E). For example, if a pollutant had all non-detected values for all of the episodes in an option, then it was not possible to calculate option variability factors. When EPA could not calculate the option variability factors, EPA selected variability factors from other sources to provide an adequate allowance for variability in the limitations. This section describes these cases.

Table 14-4 lists the pollutants for which EPA was unable to calculate option variability factors. The following paragraphs describe EPA's determination for each case.

For benzo(a)pyrene in the BAT-1 option of the Cokemaking Subcategory, EPA transferred the option variability factors for naphthalene from the same option. EPA expects that these two pollutants would have similar variability in the effluent concentrations because they are chemically similar.

For O&G, because there were too few detected measurements, option variability factors could not be calculated from data that passed the LTA test described in Section 14.5. Because EPA expects that the variability in the effluent would be similar, EPA has used the variability factors from an episode ESE01 in that option, which did not pass the LTA test.

14.8.4 Summary of Steps Used to Derive Concentration-Based Limitations

This section summarizes the steps used to derive the concentration-based limitations. For each pollutant in an option for a subcategory, EPA performed the following steps in calculating the concentration-based limitations:

Step 1. EPA calculated the *episode-specific long-term averages and daily and monthly variability factors* for all selected episodes with the model technology for the option in the subcategory. (See Section 14.2 for selection of episodes and Attachment 14-2 in Appendix E for episode-specific long-term averages and variability factors.)

Step 2. EPA calculated the *option long-term average* as the median of the episode-specific long-term averages. (See Attachment 14-3 in Appendix E.)

Step 3. EPA calculated the *option variability factors* for each pollutants as the mean of the episode-specific variability factors from the episodes with the model technology. (See Attachment 14-3 in Appendix E.) The option daily variability factor is the mean of the episode-specific daily variability factors. Similarly, the option monthly variability factor is the mean of the episode-specific monthly variability factors.

Step 4. For the pollutants for which Steps 1 and 3 failed to provide option variability factors, EPA determined variability factors on a case-by-case basis. (See Section 14.8.3 and Attachment 14-4 in Appendix E.)

Step 5. EPA calculated each concentration-based *daily maximum limitation* for a pollutant using the product of the option long-term average and the option daily variability factor. (See Attachment 14-3 in Appendix E.)

Step 6. EPA calculated each concentration-based *monthly average limitation* for a pollutant using the product of the option long-term average and the option monthly variability factor. (See Attachment 14-3 in Appendix E.)

Step 7. EPA *compared* the daily maximum limitations to the data used to develop the limitations. EPA performed this comparison to determine if EPA used appropriate distributional assumptions for the data used to develop the limitations, in other words, whether the curves EPA used provide a reasonable "fit" to the actual effluent data.[4]

The next section describes the conversion of the concentration-based limitations to the production-normalized limitations that are provided in the regulation.

14.9 Conversion to Production-Normalized Limitations

The previous discussions about the limitations were based upon concentration data. The Part 420 regulation promulgated in 1982 and other previous mass-based regulations have presented pollutant limitations in terms of kilograms of allowable pollutant discharge per thousand kilograms of production (kg/kkg), also expressed as pounds of allowable pollutant discharge per thousand pounds of production (lbs/1,000 lbs). In the proposal, EPA expressed the limitations in terms of pounds of allowable pollutant discharge per ton of production (lbs/ton). Because comments on the proposal urged EPA to return to the units previously used in Part 420 (i.e., kg/kkg or lbs/1000 lbs), EPA has used these units for the final rule.

This section describes the conversion from concentration-based limitations to the production-normalized limitations in the regulation. This section also provides EPA's methodology for determining the number of significant digits to use for the production-normalized limitations.

[4]EPA believes that the fact that EPA performs such an analysis before promulgating limitations may give the impression that EPA expects occasional exceedances of the limitations. This conclusion is incorrect. EPA promulgates limitations that facilities are capable of complying with at all times by properly operating and maintaining their treatment technologies.

14.9.1 Conversion from Concentration-Based Limitations

In calculating the production-normalized limitations, EPA used the concentration-based limitations, the production flow rates, and the conversion factor. The concentration-based limitations are calculated as described in the previous section and are listed in Attachment 14-3 in Appendix E. The following paragraphs briefly describe the production flow rates and the conversion factor used to calculate the production-normalized limitations.

The production flow rates used in the calculation are expressed as production-normalized flow rates (PNFs) in terms of gallons of water discharged per thousand pounds of production (lbs/1,000 lbs) for all operations. The production-normalized flow rates are provided in Attachment 14-4 in Appendix E (the derivation of these flow rates is explained in Section 13).

EPA used following conversion factor to obtain limitations expressed as pounds per ton (lb/ton):

$$\text{conversion factor} = \frac{3.7854\ \text{L}}{\text{gal}} \times \frac{\text{lb}}{453.593 \times 10^{6}\ \mu\text{g}} \times \frac{\text{short ton}}{2 \times 1{,}000\ \text{lb}} = 4.1727 \times 10^{-9} \frac{\text{L/gal}}{\mu\text{g/lb}} \frac{\text{short ton}}{1{,}000\ \text{lb}} \qquad (14\text{-}2)$$

EPA used the production flows and the conversion factor to calculate each production-normalized limitation using the following basic equation:

Production-normalized limitation =
Concentration-based limitation × Production-normalized flow rate × conversion factor

The following is an example of applying the conversion factor:

For the Cokemaking Subcategory option BAT-1, suppose the concentration-based daily maximum limitation is 100 µg/L. Using the production value of 113 gpt for the Cokemaking Subcategory, the production-normalized daily maximum limitation (limit_{pn}) is:

$$\text{LTA}_{pn} = \frac{100\ \mu\text{g}}{\text{L}} \times \frac{113\ \text{gal}}{\text{short ton}} \times 4.1727 \times 10^{-9} \frac{\text{L/gal}}{\mu\text{g/lb}} \times \frac{\text{short ton}}{1000\ \text{lb}} = 0.0000313 \frac{\text{lb}}{1000\ \text{lb}}$$

14.9.2 Significant Digits for Production-Normalized Limitations

After completing the conversions described in the previous section, EPA generally rounded the production-normalized limitations to three significant digits. Because Section 14.3 of EPA method 1664A requires reporting of results for O&G below 10 mg/L to two significant digits, EPA has rounded the production-normalized limitations for O&G to two significant digits when the corresponding concentration-based limitation was less than 10 mg/L. EPA used a rounding procedure where values of five and above are rounded up and values of four and below are rounded down. For example, a value of 0.003455 would be rounded to 0.00346, while a

value of 0.003454 would be rounded to 0.00345. The production-normalized limitations listed in Attachment 14-4 in Appendix E have three significant digits, except for some O&G limitations which have two significant digits.

14.10 Naphthalene PSES

For the naphthalene pretreatment standards for existing sources (PSES) in the cokemaking subcategory (by-product recovery segment), EPA has selected 100 µg/L and 83.1 µg/L as the concentration-based values used to calculate the final production-normalized daily maximum standard and monthly average standard, respectively. These values are different than the ones that EPA calculated applying the methodology described in the previous sections. When EPA applied its methodology to the data from the three episodes that demonstrated performance of the model technology, the resulting values of the daily maximum standard and monthly average standard were 26.1 µg/L and 21.7 µg/L, respectively. This section provides EPA's rationale for selecting different values for the final standards than those calculated from the data from the three episodes, ESE01, ESE02, and ISM54.

14.10.1 Daily Maximum Standard

As one of its seven steps in developing the standards, EPA compared the value that it had calculated for the daily maximum standard for naphthalene to the data used to develop the calculated standard. When naphthalene was detected, all samples had concentration values that were at or below 33 µg/L. When naphthalene was not detected, the sample-specific minimum levels (MLs) generally were close to the method ML of 10 µg/L for Method 1625. However, two of five samples from one EPA sampling episode, ESE02, were analyzed at a 10-fold dilution due to the amount of phenol in the sample, which made it impossible to identify naphthalene in the neat analysis. As a result of the 10-fold dilution of the samples, the sample-specific MLs had values of 100 µg/L. In examining the data for the other EPA sampling episode, ESE01, EPA determined that those samples also had high levels of phenol concentrations, even though the laboratory obtained sample-specific MLs close to the method MLs. (See DCN IS12035 in Section 16.4 of the record.) Thus, EPA determined that facilities with the model technology may have high levels of phenol that could interfere with the determination of naphthalene concentrations in their effluent. Although the laboratory overcame the phenol interferences in the five samples for one episode and succeeded in achieving sample-specific MLs with values close to the method ML of 10 µg/L, for the other EPA sampling episode, it could not do so for two samples. For the self-monitoring data for ISM54 that were determined by Method 625 rather than Method 1625, the facility reported sample-specific detection limits that were below the 10 µg/L.

While there was no evidence of any chromatographic peaks for naphthalene in the chromatograms associated with the two diluted samples, the best that EPA can say with a high degree of confidence is that the naphthalene concentrations were between zero (i.e., not present) and 100 µg/L for these two samples. In order to demonstrate compliance with the naphthalene standard, a sample would have to be analyzed with a sample-specific ML of at or below the standard. Because EPA could not overcome the phenol interferences without diluting the two

samples, EPA cannot say with confidence that naphthalene samples can be analyzed with a sample-specific minimum level of less than 100 µg/L in every case. For this reason, EPA has determined that 100 µg/L should be the concentration-basis of today's daily maximum standard.

14.10.2 Monthly Average Standard

In establishing monthly average limitations and standards, EPA's objective is to provide an additional restriction that supports EPA's objective of having facilities control their average discharges at the long-term average. The monthly average limitation requires continuous dischargers to provide on-going control, on a monthly basis, that complements controls imposed by the daily maximum limitation. In order to meet the monthly average limitation, a facility must counterbalance a value near the daily maximum limitation with one or more values well below the daily maximum limitation. To achieve compliance, these values must result in a monthly average value at or below the monthly average limitation. (This explanation of EPA's objective was cited with approval by the Court as support in its decision in National Wildlife Federation, et al. v. Environmental Protection Agency, No. 99-1452 (DC Cir.) (April 19, 2002)).

Consistent with EPA's objective for the monthly average standard, EPA has determined that the concentration-based monthly average standard could be less than 100 µg/L, because EPA assumes that the facilities will monitor for naphthalene more than once a month. In fact, EPA has assumed that facilities will monitor four times a month and has accounted for those costs in this rule. In general, EPA expects that laboratories will usually be able to measure at levels lower than 100 µg/L, because most of the data supporting the standards demonstrated that laboratories could overcome interferences in the samples. Thus, it has established a value at 83.1 µg/L as the concentration-basis for the monthly average standard. In calculating this value, EPA first estimated the long-term average as the ratio of the daily maximum standard of 100 µg/L and the daily variability factor of 2.101 calculated using the data from the three episodes. Second, EPA calculated the monthly average standard as the product of the long-term average (47.596 µg/L) and the monthly variability factor of 1.746 also calculated using the data from the three episodes. This product was equal to 83.1 µg/L which EPA established as the concentration-basis for today's monthly average standard. This value of 83.1 µg/L is well above the largest measured value of 33 µg/L. As described in Section 14.9, EPA then converted this value to a production-normalized basis for today's regulation.

Table 14-1

Aggregation of Field Duplicates

If the field duplicates are:	Censoring type of average is:	Value of aggregate is:	Formulas for aggregate value of duplicates:
Both non-censored	NC	arithmetic average of measured values	$(NC_1 + NC_2)/2$
Both non-detected	ND	arithmetic average of sample-specific detection limits	$(DL_1 + DL_2)/2$
One non-censored and one non-detected	NC	arithmetic average of measured value and sample-specific detection limit	$(NC + DL)/2$

NC - non-censored (or detected).
ND - non-detected.
DL - sample-specific detection limit.

Table 14-2

Aggregation of Grab Samples

If the grab or multiple samples are:	Censoring type of Daily Value is:	Daily value is:	Formulas for Calculating Daily Value:
All non-censored	NC	arithmetic average of measured values	$\frac{\sum_{i=1}^{n} NC_i}{n}$
All non-detected	ND	arithmetic average of sample-specific detection limits	$\frac{\sum_{i=1}^{n} DL_i}{n}$
Mixture of non-censored and non-detected values (total number of observations is n=k+m)	NC	arithmetic average of measured values and sample-specific detection limits	$\frac{\sum_{i=1}^{k} NC_i + \sum_{i=1}^{m} DL_i}{n}$

NC - non-censored (or detected).
ND - non-detected.
DL - sample-specific detection limit.

Table 14-3

Aggregation of Data Across Streams

If the n observations are:	Censoring type is:	Formulas for value of aggregate
All non-censored	NC	$\frac{\sum_{i=1}^{n} NC_i \times flow_i}{\sum_{i=1}^{n} flow_i}$
All non-detected	ND	$\frac{\sum_{i=1}^{n} DL_i \times flow_i}{\sum_{i=1}^{n} flow_i}$
Mixture of k non-censored and m non-detected (total number of observations is n=k+m)	NC	$\frac{\sum_{i=1}^{k} NC_i \times flow_i + \sum_{i=1}^{m} DL_i \times flow_i}{\sum_{i=1}^{n} flow_i}$

NC - non-censored (or detected).
ND - non-detected.
DL - sample-specific detection limit.

Table 14-4

Cases where Option Variability Factors Could Not be Calculated

Subcategory	Option	Pollutant	Source of Variability Factors
Cokemaking	BAT-1	Benzo(a)pyrene	naphthalene, same option
		Oil and Grease	ESE01

SECTION 15

NON-WATER QUALITY ENVIRONMENTAL IMPACTS

Sections 304(b) and 306 of the Clean Water Act require EPA to consider non-water quality environmental impacts associated with effluent limitations guidelines and standards. These impacts are the environmental consequences not directly associated with the wastewater that may be associated with the regulatory options considered. In accordance with these requirements, EPA has considered the potential impacts of the regulation on energy consumption, air emissions, and solid waste generation. This section quantifies the non-water quality environmental impacts associated with the final rule.

15.1 Energy Requirement Impacts

Table 15-1 compares the current and incremental energy requirements for the subcategories for which EPA is promulgating new or revised effluent limitations. Table 15-2 provides a summary of the incremental energy requirements for all options and subcategories considered for the final rule.

EPA estimated the amount of energy currently consumed by the iron and steel industry from the values reported in the U.S. EPA Collection of 1997 Iron and Steel Industry Data, and used survey weights to normalize the data to a national average.

EPA determined the incremental energy requirements only for those new treatment units that EPA assumed would be necessary to comply with revised or new effluent limitations or standards. In general, additional energy requirements are a result of the electric motors in new or upgraded cooling water recycle and treatment systems to drive water pumps, chemical mixers, aeration equipment such as blowers and compressors, and cooling tower fans. EPA calculated energy requirements by summing the total horsepower (HP) needed for each recycling or treatment step, converting horsepower to kilowatts (kW), and multiplying by the operational time (hours). The equation below shows the conversion from total system horsepower to annual electrical usage (Reference 15-1) in kilowatt-hours per year (kWh/year).

$$\text{Energy Required} = 0.7456 \frac{\text{kW}}{\text{HP}} \times \text{HP} \times \text{HPY} \qquad (15\text{-}1)$$

where:

HP = Total horsepower required by additional equipment; and
HPY = Hours per year of equipment operation.

15.1.1 Cokemaking Subcategory

This subcategory includes 12 direct dischargers and 8 indirect dischargers. As shown in Table 15-1, EPA has selected options BAT-1 and PSES-1 as the options for the final

rulemaking for direct and indirect dischargers, respectively. The additional energy requirement of 16 million kWh/year for BAT-1 (Table 15-2) is attributed to four sites upgrading and optimizing existing biological treatment systems; one site installing a free ammonia distillation system; two sites installing additional biological treatment filters; two sites installing free and fixed ammonia distillation systems; one site installing a tar removal system, heat exchanger, biological treatment equalization tank, final cooler, and spare pump for coke quench water return, and upgrading controls on an existing ammonia distillation system; two sites installing biological treatment equalization tanks; two sites installing ammonia distillation equalization tanks; and one site installing additional aeration capacity for biological treatment. The additional energy requirement of 1 million kWh/year for PSES-1 (Table 15-2) is attributed to one site installing a free and fixed ammonia distillation system, four sites installing equalization tanks for ammonia distillation systems, and one site optimizing and upgrading an existing biological treatment system. Based on the industry survey data, EPA estimates that the cokemaking subcategory currently consumes more than 104 million kWh/year of energy. As such, the increased energy consumption by the BAT-1 and PSES-1 treatment options is approximately 16 percent of the total energy consumed by the subcategory (Table 15-1).

For the remaining options that EPA considered for the rulemaking, the increase in energy requirements to 24 million kWh/year for BAT-3 is based on all 13 direct dischargers installing breakpoint chlorination and 9 also installing multimedia filtration. For PSES-3, EPA estimates additional energy requirements totaling 16 million kWh/year based on five sites installing biological treatment systems.

Neither of the two non-recovery cokemaking facilities generate wastewater and, therefore, EPA estimates there will be no additional energy requirements for this industry segment.

15.1.2 Ironmaking Subcategory

This subcategory includes 15 direct dischargers and 1 indirect discharger. EPA did not revise limitations or standards for this subcategory so there are no additional energy requirements for this subcategory. The following discussion is based on the options EPA considered for the proposed ironmaking and sintering segments, but ultimately rejected, for the final rule.

EPA estimates an incremental energy requirement of 18 million kWh/year (Table 15-2) for BAT-1 based on the installation of 2 new high-rate recycle systems, 6 chemical precipitation systems, 6 solids handling systems, 12 multimedia filtration systems, 12 breakpoint chlorination systems, and 2 cooling towers and pumping stations. EPA does not expect the one indirect discharger to need additional treatment units to comply with PSES-1; therefore, this option would not have additional energy requirements. Based on industry survey data, EPA estimates that the ironmaking subcategory currently consumes more than 115 million kWh/year of energy. The increased energy consumption by the BAT-1 and PSES-1 treatment options would be approximately 16 percent of the total energy consumed by the subcategory.

15.1.3 Sintering Subcategory

The sintering subcategory includes five direct dischargers. In the final rule, EPA included limitations and standards for one additional parameter: 2,3,7,8-TCDF. The technology basis for these limitations and standards is multimedia filtration in addition to the 1982 technology basis.

EPA estimates that this subcategory will consume approximately 4 million kWh/year of additional energy (Table 15-2). EPA estimates that this increase in energy demand will result from four sites installing a multimedia filtration system and solids handling system, and one site installing a chemical precipitation system, solids handling system, and multimedia filtration system. Based on industry survey data, sintering operations currently consume approximately 17 million kWh/year of energy. The incremental energy demand represents a 24-percent increase (Table 15-1). Note that sintering operations comprise only a small portion of the total combined iron and steel operations conducted at these five sites. Therefore, the incremental energy demand for sintering operations is insignificant as compared to the total combined energy consumption at these sites.

15.1.4 Integrated Steelmaking Subcategory

This subcategory includes 20 direct dischargers and 1 indirect discharger. EPA did not revise limitations or standards for this subcategory so there are no additional energy requirements for this subcategory. The following discussion is based on the options EPA considered, but ultimately rejected, for the final rule.

The Agency estimates that the additional energy requirement of 12 million kWh/year (Table 15-2) for BAT-1 is the result of 25 chemical precipitation systems for treatment of blowdown water, 8 carbon dioxide injection systems, 1 new continuous caster high-rate recycle system, and modifications to 13 existing high-rate recycle systems to increase recycling capacity. EPA estimates that indirect discharging integrated steelmaking facilities would not need additional treatment units to upgrade to the model PSES-1 treatment system and, therefore, no additional energy requirements are expected. The treatment and recycle systems currently used by the industry include solids removal using a classifier and clarifier, induced draft cooling towers for vacuum degassing and continuous casting wastewater, and pump stations to return the treated and cooled water to the steelmaking process. The modified high-rate recycle systems include additional cooling towers, piping, and pump stations to increase recycling capacity. Chemical precipitation systems remove metals from the recycle system blowdown water and include reaction tanks with mixers, clarifiers, thickeners, and filter presses. Carbon dioxide injection systems, which include mixers and pressurized solution feed systems, remove scale-forming metal ions (hardness) from basic oxygen furnace (BOF) recycle water in wet-open and wet-suppressed combustion systems. Based on industry survey data, integrated steelmaking facilities currently consume approximately 707 million kWh/year of energy. The incremental energy demand would represent a 1.7-percent increase.

15.1.5 Integrated and Stand-Alone Hot Forming Subcategory

This subcategory includes 32 direct dischargers and 5 indirect dischargers. EPA did not revise limitations or standards for this subcategory so there are no additional energy requirements for this subcategory. The following discussion is based on the options EPA considered, but ultimately rejected, for the final rule.

EPA estimates that 214 million kWh/year of additional electricity would be necessary to comply with BAT-1. The Agency estimates that sites would install 14 high-rate recycle systems to replace existing partial or once-through treatment systems, 13 cooling towers and pumping stations to increase recycling capacity, and 18 multimedia filtration systems. For PSES-1, EPA expects that two carbon manufacturing facilities and two stainless facilities would install multimedia filters. As shown in Table 15-2, EPA estimated that indirect dischargers would need an additional 0.04 million kWh/year of electricity to comply with this technology option. The incremental increase in energy requirements due to BAT-1 and PSES-1 would represent a 56-percent increase over the current subcategory requirements of 383 million kWh/year, as reported in industry survey data.

15.1.6 Non-Integrated Steelmaking and Hot Forming Subcategory

This subcategory includes 34 direct dischargers, 12 indirect dischargers, and 2 sites that discharge both directly and indirectly. EPA did not revise limitations or standards for this subcategory so there are no additional energy requirements for this subcategory. The following discussion is based on the options EPA considered, but ultimately rejected, for the final rule.

The additional 33 million kWh/year of energy that EPA estimates would be required for BAT-1 (Table 15-2) for the non-integrated steelmaking and hot forming operations are due to the addition of 25 multimedia filters, 3 new high rate recycle systems, and 22 cooling towers and pumping stations to increase recycling capacity.

EPA estimates that an additional 0.5 million kilowatt-hours of energy would be necessary to comply with PSES-1 for non-integrated steelmaking and hot forming sites (Table 15-2). EPA estimates that sites would install 11 multimedia filters in indirect discharging systems. Six sites would need additional cooling towers, pipes, and pumping stations to increase the recycling capacity of existing recycling systems. The incremental increase in energy requirements due to the BAT-1 and PSES-1 options would represent a 8-percent increase over the current subcategory requirement of 440 million kWh/year, as reported in industry survey data.

15.1.7 Steel Finishing Subcategory

This subcategory includes 57 direct dischargers and 32 indirect dischargers. EPA did not revise limitations or standards for this subcategory so there are no additional energy requirements for this subcategory. The following discussion is based on the options EPA considered, but ultimately rejected, for the final rule.

EPA estimates that 24 direct dischargers would install countercurrent rinse tanks to consume approximately 5 million kWh/year of additional energy (Table 15-2). For indirect dischargers, EPA estimates that an additional 0.1 kWh/year of energy would be required for four finishing sites to install countercurrent rinse tanks to achieve PSES-1. Based on industry survey data, steel finishing facilities currently consume approximately 260 million kWh/year of energy. The incremental energy demand would represent a 2-percent increase.

15.1.8 Other Operations Subcategory

The other operations subcategory includes direct-reduced ironmaking (DRI), forging, and briquetting operations. As shown in Table 15-1, EPA has selected the BPT-1 option for the final rulemaking. EPA estimates that an additional 0.01 kWh/year will be required for two forging facilities to install multimedia filters to meet BPT (Table 15-2). EPA estimates that the DRI facility will not need additional treatment equipment to meet BPT. The briquetting facilities do not discharge process wastewater; therefore, additional treatment equipment is not needed to achieve the effluent limitations. The incremental increase in energy generation for the other operations subcategory represents a 0.1-percent increase over the current subcategory requirement of 8 million kWh/year (Table 15-1).

15.1.9 Energy Requirements Summary

Based on information provided in the industry surveys, the iron and steel industry currently consumes approximately 2.0 billion kWh/year of energy for wastewater treatment. EPA estimates that compliance with the final iron and steel regulation will result in a net increase in energy consumption of 21 million kWh/year of electricity for the entire industry, or approximately 1.1 percent of existing requirements.

In 1997, the United States consumed approximately 3,122 billion kWh of electricity (Reference 15-2). The 21 million kWh/year increase in electricity as a result of the final regulation corresponds to less than 0.001 percent of the national requirements. The increase in energy requirements due to the implementation of the final rule will in turn increase air emissions from the electric power generation facilities. The increase in air emissions is expected to be proportional to the increase in energy requirements, or less than 0.001 percent.

15.2 Air Emission Impacts

Various subcategories within the iron and steel industry generate process waters that contain significant concentrations of organic and inorganic compounds, some of which are listed as Hazardous Air Pollutants (HAPs) in Title III of the Clean Air Act Amendments of 1990. The Agency developed National Emission Standards for Hazardous Air Pollutants (NESHAPs) under Section 112 of the Clean Air Act, which addresses air emissions of HAPs for certain manufacturing operations. Subcategories within the iron and steel industry where NESHAPs are applicable include cokemaking (58 FR 57898, October 1993) and steel finishing with chromium electroplating and chromium anodizing (60 FR 4948, January 1995).

For the cokemaking subcategory, EPA proposed maximum achievable control technology (MACT) standards on July 3, 2001 (66 FR 35326) for pushing, quenching, and battery stacks at cokemaking plants. These regulations are currently scheduled for promulgation in December 2002. Like effluent limitations guidelines and standards, MACT standards are technology-based. The Clean Air Act sets maximum control requirements on which MACT standards can be based for new and existing sources. By-product recovery operations in the cokemaking subcategory remove the majority of HAPs through processes that collect tar, heavy and light oils, ammonium sulfate, and elemental sulfur. Ammonia removed by steam stripping, also referred to as free and fixed ammonia distillation, could generate a potential air quality issue if uncontrolled; however, ammonia stripping operations at cokemaking facilities capture vapors and convert ammonia to either an inorganic salt or anhydrous ammonia, or destroy the ammonia. Ammonia stripping also removes cyanide, phenols, and other volatile organic compounds (VOCs) typically found in cokemaking wastewater. The VOCs that are not destroyed during the stripping process remain in the liquid ammonia still wastewater effluent stream for subsequent biological treatment.

Biological treatment of cokemaking wastewater can potentially emit HAPs if significant concentrations of volatile organic compounds (VOCs) are present. To estimate the maximum air emissions from biological treatment, EPA multiplied the individual concentrations of VOCs in cokemaking wastewater entering the biological treatment system by the maximum design flow (2.52 million gallons per day) and the maximum operational period (365 days/year) reported in the U.S. EPA Collection of 1997 Iron and Steel Industry Data, and then summed the emissions for all VOCs. The Agency determined the concentrations of the individual VOCs entering the biological treatment systems, which include benzene, acetone, acrylonitrile, carbon disulfide, and 1,1,2,2-TCA, from EPA sampling data. Using the conservative assumption that all of the VOCs entering the biological treatment system are emitted to the atmosphere (no biological degradation), the maximum VOC emission rate would be approximately 1,800 pounds or 0.9 tons per year. (EPA can not disclose the concentrations or loadings for individual pollutants because it would disclose confidential business information.) EPA believes that this is an overestimate because VOCs can be degraded through biological treatment. EPA concludes that, even if this likely overestimate of VOC emission rate were accurate, it is well below threshold levels that would classify the site as a major source of VOCs (i.e., 25 tons for the combination of all HAPs, or 10 tons for any individual HAP). Therefore, EPA's estimate would be an acceptable rate of emissions that would not have a significant impact on the environment.

EPA did not identify any volatile pollutants of concern and identified 11 semivolatile pollutants of concern in untreated sintering wastewater. The incremental technology basis for the sintering segment beyond the 1982 rule includes only multimedia filtration to remove chlorinated dioxin and furan congeners from sintering wastewater. EPA estimates no incremental air emissions for sintering operations.

EPA did not identify any volatile or semivolatile pollutants of concern in untreated blast furnace wastewater, integrated and stand-alone hot forming wastewater, or other operations wastewater. Therefore, EPA estimates no incremental air emissions for the technology options evaluated for these subcategories for the final rule.

For the steel finishing subcategory, EPA identified several volatile and semivolatile priority and nonconventional organic pollutants of concern in untreated wastewater in both the carbon and alloy and stainless segments. The volatile organic pollutants of concern for the carbon and alloy segment are 1,1,1-trichloroethane and 2-propanone and the semivolatile priority organic pollutants are bis(2-ethylhexyl)phthalate, alpha-terpineol, benzoic acid, n-dodecane, n-eicosane, n-hexadecane, n-octadecane, and n-tetradecane. For the stainless segment, the volatile organic pollutants of concern are ethylbenzene, toluene, m-xylene, o- + p-xylene, and 2-propanone. The semivolatile priority organic pollutants are naphthalene, phenol, 2,6-di-tert-butyl-p-benzoquinone, hexanoic acid, 2-methylnaphthalene, n-docosane, n-dodecane, n-eicosane, n-hexadecane, n-octadecane, n-tetracosane, and n-tetradecane. EPA estimated that sites in the proposed steel finishing subcategory would install only countercurrent rinse tanks to achieve the limitations considered by the Agency for the final rule. EPA estimated that these additional rinse tanks would not significantly impact air emissions for steel finishing operations beyond the current levels of emissions. EPA did not revise limitations and standards for the steel finishing subcategory.

For the integrated and non-integrated steelmaking subcategories, the only organic pollutant of concern detected in untreated BOF wastewater was phenol from stainless steel product manufacturing. Phenol was detected at relatively low concentrations (0.012 mg/L to 0.33 mg/L). Because phenol is a semivolatile organic compound with a low Henry's Law constant, it is not expected to partition to the air. No volatile pollutants of concern were detected in any steelmaking wastewater sample. The other primary pollutants in the steelmaking process wastewater are suspended solids, dissolved metals, and oils. Under ambient conditions, these pollutants show insignificant volatilization because of their vapor pressure, even in open-top treatment units. EPA did not revise limitations and standards for the integrated and non-integrated steelmaking subcategories.

Wet air pollution control (WAPC) equipment is commonly used by facilities in a number of iron and steel subcategories to control air emissions. None of the pollution prevention, recycling, or wastewater technology options will have a negative impact on the performance of these WAPC systems. In fact, some of the proposed pollution prevention alternatives considered by EPA for the final rule may enhance the performance of these systems by reducing pollutant loadings. Therefore, EPA does not expect any adverse air impacts to occur as a result of the final regulation.

15.3 Solid Waste Impacts

A number of the final treatment technologies that comprise the technology basis for the final rule will generate solid waste, including Resource Conservation and Recovery Act (RCRA) hazardous and nonhazardous sludge and waste oil. Most solid waste generated by the iron and steel industry is nonhazardous, except for certain treatment sludges generated by electroplating operations in the steel finishing industry and iron-cyanide sludge generated during treatment of cokemaking wastewater. Nonhazardous solid wastes include sludge from biological treatment of cokemaking wastewater and sludge from multimedia filtration, chemical precipitation, and clarification of iron and steelmaking wastewater. Federal and state regulations

require iron and steel facilities to manage their RCRA hazardous and nonhazardous sludges to prevent releases to the environment.

The following subsections provide both current sludge generation rates estimated from the industry surveys and the incremental increases estimated for option considered for each iron and steel subcategory for this final rule. Incremental increases in sludge generation are based on the pollutant loading and removal information provided in Section 11. Based on the information summarized in Table 15-1, EPA estimates that annual sludge generation for all subcategories affected by the final rule will increase by 0.2 percent.

15.3.1 Cokemaking Subcategory

Biological treatment with nitrification followed by clarification, which is the primary technology basis for removal of ammonia, phenolics, and biochemical oxygen demand (BOD) from cokemaking wastewater will generate wastewater treatment sludge requiring disposal or further processing. Table 15-3 shows additional sludge generation for all cokemaking facilities for each of the technology options considered for the final rule.

EPA selected options BAT-1 and PSES-1 for the final rule for direct and indirect dischargers, respectively. EPA estimates that compliance with BAT-1 will generate approximately 150 tons (dry) per year of additional sludge and PSES-1 will generate an additional 40 tons (dry) per year (Table 15-3). The additional sludge generation for the BAT-1 option is due to incremental ammonia removal via biological treatment, while the additional sludge generation for PSES-1 is due to incremental ammonia removal via biological treatment at sites that already operate biological treatment systems. Based on industry survey data, EPA estimates that the cokemaking industry currently generates more than 53,000 tons per year (dry) of sludge. As such, the increased sludge generated by the BAT-1 and PSES-1 treatment options is approximately 0.4 percent of the total sludge currently generated by the industry (Table 15-1).

BAT-3, which was rejected as the technology basis for this final rule, generates a greater amount of additional sludge than BAT-1 (410 tons per year (dry)) due to the removal of total suspended solids (TSS) by the multimedia filters following biological treatment. The Agency expects approximately 130 additional tons of sludge per year (dry) would be generated for PSES-3. The incremental sludge generation is due to the addition of biological treatment to the PSES-1 technology basis.

Neither of the two non-recovery cokemaking facilities generate wastewater and, therefore, these facilities are not expected to generate additional sludge.

15.3.2 Ironmaking Subcategory

EPA did not revise limitations or standards for this subcategory so there is no additional sludge generation for this subcategory. The following discussion is based on the options EPA considered for the proposed ironmaking and sintering segments, but ultimately rejected, for the final rule.

Ironmaking operations would generate additional wastewater treatment sludge as a result of complying with both BAT-1 and PSES-1. BAT-1, which includes such sludge generating treatment technologies as solids removal in the high-rate recycle system, clarification, chemical precipitation, and multimedia filtration, would generate approximately 5,870 additional tons/year (dry) of wastewater treatment sludge, as shown in Table 15-3. PSES-1, which includes the same solids-generating treatment units as BAT-1 with the exception of multimedia filtration, would generate an additional 40 tons per year (dry) of wastewater treatment sludge.

Industry survey estimates show that ironmaking operations generated approximately 236,000 tons (dry) of mill scale, grit, and sludge in 1997. The BAT-1 and PSES-1 options for ironmaking would increase annual sludge generation by 5,910 tons/year, an increase of approximately 2.5 percent.

15.3.3 Sintering Subcategory

As shown in Tables 15-1 and 15-3, EPA estimates that compliance with the selected technology option will generate approximately 84 tons (dry) per year of additional sludge. The additional sludge generation is due to multimedia filtration and chemical precipitation. Based on the industry survey data, EPA estimates that the sintering industry currently generates more than 100,000 tons per year (dry) of sludge. Therefore, the incremental sludge generation represents a 0.1-percent increase in sludge generation.

15.3.4 Integrated Steelmaking Subcategory

EPA did not revise limitations or standards for this subcategory so there is no additional sludge generation for this subcategory. The following discussion is based on the options EPA considered, but ultimately rejected, for the final rule.

To comply with BAT-1, EPA estimates an additional 2,950 tons/year (dry) of wastewater treatment sludge would be generated due to solids removal in the high-rate recycle systems, clarification, multimedia filtration, and chemical precipitation (Table 15-3). Indirect discharging integrated steelmaking facilities have the model treatment equipment in place and, therefore, EPA would not expect them to generate additional sludge. Based on industry survey data, integrated steelmaking operations currently generate approximately 740,000 tons/year of mill scale, sludges, and filter cakes. The additional generation of sludge would represent a 0.4-percent increase.

15.3.5 Integrated and Stand-Alone Hot Forming Subcategory

EPA did not revise limitations or standards for this subcategory so there is no additional sludge generation for this subcategory. The following discussion is based on the options EPA considered, but ultimately rejected, for the final rule.

The Agency estimates an additional 20,000 tons/year (dry) of sludge would be generated to comply with BAT-1 due to solids removal in high-rate recycle systems, clarification,

and multimedia filtration (Table 15-3). EPA estimates that, to comply with PSES-1, indirect dischargers would generate an additional 20 tons/year of sludge due to multimedia filtration. Incremental sludge production is estimated to be a 6.1-percent increase over the current annual sludge production of 326,000 tons/year, as reported in industry survey data.

15.3.6 Non-Integrated Steelmaking and Hot Forming Subcategory

EPA did not revise limitations or standards for this subcategory so there is no additional sludge generation for this subcategory. The following discussion is based on the options EPA considered, but ultimately rejected, for the final rule.

To comply with BAT-1 and PSES-1 for the non-integrated steelmaking and hot forming subcategory, the Agency estimates an additional 1,400 tons/year (dry) of sludge for BAT-1 and 10 tons/year for PSES-1 would be generated due to solids removal in high-rate recycle systems, clarification, and multimedia filtration (Table 15-3). Treatment sludges from BAT-1 and PSES-1 would increase solid waste production by approximately 0.1 percent over the current 1,275,000 tons per year, as reported in industry survey data.

15.3.7 Steel Finishing Subcategory

EPA did not revise limitations or standards for this subcategory so there is no additional sludge generation for this subcategory. The following discussion is based on the options EPA considered, but ultimately rejected, for the final rule.

Steel finishing facilities generate both RCRA hazardous and nonhazardous sludges. RCRA sludge may be classified as hazardous as a result of listing or characterization based on the following information:

- If the site performs electroplating operations, the sludge resulting from treatment of this wastewater is a RCRA F006 listed hazardous waste (40 CFR 260.11). If wastewater from other operations is mixed with the electroplating wastewater and treated, all sludges generated from the treatment of the combined wastewater are also RCRA F006 listed hazardous wastes.

- Sludge generated from the treatment of wastewater associated with tin plating on carbon steel and zinc plating on carbon steel is not a RCRA listed hazardous waste.

- If the sludge from wastewater treatment exceeds the standards for the Toxicity Characteristic Leaching Procedure (i.e., is hazardous), or exhibits other RCRA-defined hazardous characteristics (i.e., is reactive, corrosive, or flammable), it is considered a characteristic hazardous waste (40 CFR 261.24).

Based on information collected during site visits and sampling episodes to iron and steel operations, the Agency believes that the majority of sludge generated by steel finishing sites would not be classified as hazardous. Information provided in the industry surveys indicates that less than 5 percent of the total sludges and solid waste generated by finishing facilities is hazardous under RCRA.

For carbon and alloy and stainless steel finishing sites, BAT-1 and PSES-1 consist of in-process controls to limit water usage and recycle process chemicals, plus end-of-pipe wastewater treatment. Wastewater treatment includes oil removal, hexavalent chromium reduction, hydraulic and waste loading equalization, metals precipitation, clarification, and sludge dewatering. EPA estimates that direct dischargers (both carbon and alloy and stainless steel) installing and modifying these treatment systems would generate approximately 2,150 tons/year (dry) of additional treatment sludge (Table 15-3). EPA estimates that indirect dischargers would generate an additional 30 tons/year of wastewater treatment sludge. Industry survey data indicate that finishing facilities currently generate over 790,000 tons per year (dry) of sludge. The BAT-1 and PSES-1 options for steel finishing would increase annual sludge generation by approximately 0.3 percent.

15.3.8 Other Operations Subcategory

The Agency estimates the other operations subcategory will generate an additional 3 tons/year (dry) of sludge to comply with the BPT effluent limits due to multimedia filtration (Table 15-3). Treatment sludges from BPT will increase solid waste production by approximately 0.1 percent over the current 2,500 tons/year, as shown in Table 15-1.

15.3.9 Solid Waste Impacts Summary

Based on information provided in the industry surveys, the iron and steel industry currently generates approximately 3,522,500 tons/year of solid waste. EPA estimates that compliance with the new or revised limitations in this final rule will result in a net increase in sludge generation of 277 tons/year for the entire industry, or approximately 0.007 percent.

15.4 References

15-1 Perry's Chemical Engineers Handbook, Sixth Edition. McGraw Hill Press, 1984.

15-2 Energy Information Administration. Electric Power Annual 1998 Volume I, Table A1.

Table 15-1

Summary of Current and Incremental Energy Requirements and Sludge Generation by Subcategory

Energy Usage and Sludge Generation	Subcategory			
	Cokemaking	Sintering	Other	Total
Selected options	BAT-1 PSES-1	BAT-1	BPT	
Current energy usage (a) (million kilowatt hours/year)	104	17	8	129
Incremental energy usage (million kilowatt hours/year)	17	4	0.01	21
% increase in energy requirement	16	24	0.1	16
Current sludge generation (a) (tons/year)	53,000	100,000	2,500	160,000
Incremental sludge generation (tons/year)	190	84	3	277
% increase in sludge generation	0.4	0.1	0.1	0.2

(a) U.S. EPA, U.S. EPA Collection of 1997 Iron and Steel Industry Survey (Detailed and Short Surveys).

Table 15-2

Incremental Energy Requirements by Subcategory and Option

Subcategory	Incremental Energy Required (million kWh/year)			
	BAT-1	BAT-3	PSES-1	PSES-3
Cokemaking	16	24	1	16
Ironmaking	18	NA	0	NA
Sintering	4	NA	NA	NA
Integrated Steelmaking	12	NA	0	NA
Integrated and Stand-Alone Hot Forming (a)	214	NA	0.04	NA
Non-Integrated Steelmaking and Hot Forming (a)	33	NA	0.5	NA
Steel Finishing (a)	5	NA	0.1	NA
Other	0.01 (b)	NA	NA	NA

(a) Includes carbon, alloy, and stainless steel products.
(b) Based on BPT for direct-reduced iron, forging, and briquetting.
NA - Not applicable.

Table 15-3

Incremental Sludge Generation by Subcategory and Option

Subcategory	Incremental Sludge Generation (dry tons/year)			
	BAT-1	BAT-3	PSES-1	PSES-3
Cokemaking	150	410	40	130
Ironmaking	5,870	NA	40	NA
Sintering	84	NA	NA	NA
Integrated Steelmaking	2,950	NA	0	NA
Integrated and Stand-Alone Hot Forming (a)	20,000	NA	20	NA
Non-Integrated Steelmaking and Hot Forming (a)	1,400	NA	10	NA
Steel Finishing (a)	2,150	NA	30	NA
Other	3 (b)	NA	NA	NA

(a) Includes carbon, alloy, and stainless steel products.
(b) BPT for DRI, forging, and briquetting.
NA - Not applicable.

SECTION 16

IMPLEMENTATION OF PART 420 THROUGH THE NPDES AND PRETREATMENT PROGRAMS

This section presents an overview of implementation of Part 420 through the NPDES and pretreatment programs. EPA promulgated the following revisions to Part 420:

- Revised effluent limitations guidelines and standards for by-product cokemaking operations;
- New effluent limitations guidelines and standards for non-recovery cokemaking operations;
- New effluent limitations guidelines and standards for 2,3,7,8-TCDF for sintering operations with wet air pollution control systems;
- New effluent limitations guidelines and standards for sintering operations with dry air pollution control systems;
- Ammonia (as N) waivers for cokemaking, sintering, and ironmaking facilities that discharge to POTWs with nitrification capability;
- New alternative effluent limitations guidelines and standards for semi-wet basic oxygen furnace (BOF) operations;
- New limitations for electric arc furnaces with semi-wet air pollution control; and
- New effluent limitations guidelines and standards for direct-reduced iron, briquetting, and forging operations.

EPA deleted obsolete effluent limitations guidelines and standards for beehive cokemaking, ferromanganese blast furnace, and open heart steelmaking operations. EPA also revised the applicability of the total recoverable chloride limitations for sintering operations with wet air pollution control systems. The revised regulation also contains changes to the water bubble rule and certain other changes affecting implementation through the NPDES and pretreatment programs, as described later in this section.

Since permit writers, control authorities, and iron and steel facilities have been implementing the existing rule, which is largely retained in the revised Part 420 promulgated today, the focus of this section is primarily the implementation of the revisions to Part 420. EPA will also publish a guidance manual that will provide additional examples of applying Part 420 and examples of applying best professional judgment and best management practices.

New and reissued Federal and State NPDES permits to direct dischargers must include the effluent limitations promulgated today. The permits must require immediate compliance with such limitations. If the permitting authority wishes to provide a compliance schedule, it must do so through an enforcement mechanism. Existing indirect dischargers must comply with today's pretreatment standards no later than three years after the publication date of the rule. New direct and indirect discharging sources must comply with applicable limitations and standards on the date the new sources begin operations. New direct and indirect sources are those that began construction of iron and steel operations affected by today's rule after 30 days after publication date of the rule. See 65 FR at 82027.

This section is organized as follows:

- Section 16.1 - Applicability of the revised Part 420;
- Section 16.2 - Changes in subcategorization structure and applicability;
- Section 16.3 - Subcategory-specific process wastewater sources;
- Section 16.4 - Calculating NPDES permit and pretreatment effluent limitations;
- Section 16.5 - Application of best professional judgment;
- Section 16.6 - Water bubble;
- Section 16.7 - Ammonia waiver;
- Section 16.8 - Compliance monitoring;
- Section 16.9 - NPDES permit and pretreatment variances and exclusions; and
- Section 16.10 - References.

16.1 Applicability of the Revised Part 420

Section 420.01 presents the applicability of the revised Part 420. The revised regulation is subcategorized as listed below and applies to facilities that manufacture metallurgical coke (furnace coke and foundry coke); sinter; iron; steel and semi-finished steel products, including hot and cold finished flat-rolled carbon and alloy and stainless steels; flat-rolled and other steel shapes hot coated with other metals or combinations of metals; plates; structural shapes and members; and hot rolled pipes and tubes.

Subcategory	Facilities
A Cokemaking	By-product recovery coke plants Non-recovery coke plants
B Sintering	Sinter plants
C Ironmaking	Ironmaking blast furnaces
D Steelmaking	Basic oxygen furnaces Electric arc furnaces
E Vacuum Degassing	Vacuum degassing plants
F Continuous Casting	Continuing casting operations
G Hot Forming	Primary mills Section mills Hot strip and plate mills Pipe and tube mills
H Salt Bath Descaling	Oxidizing operations Reducing operations
I Acid Pickling	Sulfuric acid Hydrochloric acid Combination acid pickling
J Cold Forming	Cold rolling mills Cold worked pipe and tube mills
K Alkaline Cleaning	Batch and continuous operations
L Hot Coating	Galvanizing Galvalume Other hot dip coatings
M Other Operations	Direct-reduced iron Forging Briquetting

EPA deleted certain manufacturing processes that had been included in the prior Part 420 (promulgated in 1982 and revised in 1984) from this regulation because they are no longer used in the United States:

- Beehive cokemaking;
- Ferromanganese blast furnaces; and
- Open hearth steelmaking furnaces.

EPA is also considering revising the applicability of Parts 420 and 433 (Metal Finishing) to move certain steel finishing operations from these parts to Part 438 (Metal Products & Machinery). EPA is examining this in the context of its Part 438 rulemaking. The steel finishing operations in Part 420 that could be affected are:

- Surface finishing and cold forming of steel bar, rod, wire, pipe or tube;
- Batch electroplating on steel;
- Continuous electroplating and hot dip coating of long steel products (e.g., wire, rod, bar);
- Batch hot dip coating of steel; and
- Steel wire drawing.

These operations produce finished products such as bars, wire, pipe and tubes, nails, chain link fencing, and steel rope.

The steel finishing operations in Part 433 that could be affected by the Part 438 rulemaking include continuous electroplating of flat steel products (e.g., sheet, strip, and plate). EPA had proposed to move these electroplating operations to Part 420 but did not promulgate this revised applicability for the reasons described in Section V.A.7 of the preamble for the final rule.

16.2 Changes in Subcategorization Structure and Applicability

Table 16-1 compares the previous subcategorization of Part 420 to the revised subcategorization of Part 420 based on this final rule. For the most part, EPA kept the same subcategorization from the 1982 regulation in the revised regulation. The revisions to the final rule by subcategory are listed below:

Subcategory A - Cokemaking

- Deletes beehive coke plants because that cokemaking technology is not used in the United States.
- For BPT and BCT effluent limitations guidelines, maintains the 1982 subcategorization that distinguished between merchant and iron and steel by-product recovery coke plants because EPA did not change those effluent limitations. Adds non-recovery cokemaking as a new segment at BPT and BCT to account for that cokemaking technology.
- For BAT, NSPS, PSES and PSNS, establishes new segments for by-product recovery and non-recovery cokemaking. Based on review of information from the 1997 survey, site visits, and EPA sampling episodes, EPA determined that it is not appropriate to establish or maintain different segments for merchant and iron and steel by-product recovery coke plants.

Subcategory B - Sintering

- Adds segments to distinguish sintering operations with wet air pollution control systems and sintering operations with dry air pollution control systems.

Subcategory C - Ironmaking

- Deletes ferromanganese blast furnace operations because ferromanganese is no longer produced in blast furnaces in the Unites States.

Subcategory D - Steelmaking

- Deletes open hearth steelmaking operations because that steelmaking technology is no longer used in the United States.

Subcategory H - Salt Bath Descaling, Subcategory I - Acid Pickling, Subcategory J - Cold Rolling, and Subcategory L - Hot Coating

- EPA is considering deleting segments designated in Table 16-1 by *italics* from Part 420 and transferring them for regulation under Part 438 (Metal Products and Machinery) as part of that rulemaking.

Subcategory M - Other Operations

- Adds a new subcategory and segments for direct-reduced iron, steel forging, and briquetting operations.

16.3 Subcategory-Specific Process Wastewater Sources

Part 420 regulates discharges of process wastewaters generated in all production operations covered in the general and subcategory-specific applicability sections of the regulation. EPA defines process wastewater at 40 CFR Part 122.2 as follows:

> "... any water which, during manufacturing or processing, comes into direct contact with or results from the production or use of any raw material, intermediate product, finished product, byproduct or waste product."

As described below, permit writers and control authorities apply the effluent limitations guidelines and standards in Part 420 on a mass basis using a *reasonable measure of actual production* for the facilities being permitted. There are circumstances where facilities may appropriately cotreat non-process wastewaters generated from ancillary operations with process wastewaters. To accommodate such circumstances, EPA defined *non-process wastewaters* at §420.02(r) as:

> "... utility wastewaters (for example, water treatment residuals, boiler blowdown, and air pollution control wastewaters from heat recovery equipment); treated or untreated ground waters from groundwater remediation systems; dewatering water from building foundations; and, other wastewaters not associated with a production process."

§420.08 authorizes NPDES and pretreatment permit authorities to provide additional mass discharge allowances for non-process wastewaters when such wastewaters are appropriately cotreated with process wastewaters. EPA will publish a separate guidance document that includes examples of appropriate cotreatment of process and non-process wastewaters.

Table 16-2 lists process and non-process wastewaters generated from manufacturing and processing operations at facilities regulated by Part 420; it is not intended to be an exhaustive list. Although not repeated in Table 16-2 for each subcategory, process wastewaters that may be common to many manufacturing operations include equipment cleaning and wash down waters. Common non-process wastewaters may include process water treatment residuals, boiler blowdown, and storm water from the immediate process area. The presence of these wastewaters and the need to cotreat them with process wastewaters is dependent on the configuration of the individual steel mill.

16.4 Calculating NPDES Permit and Pretreatment Effluent Limitations

This section discusses the production basis of the effluent limitations and provides examples for calculating NPDES and pretreatment permit limits where process wastewater discharges from the same operation and same category are cotreated, where wastewater discharges from operations in different subcategories are cotreated, and where there are miscellaneous process wastewater discharges.

16.4.1 Production Basis

The limitations and standards promulgated today are expressed in terms of mass (e.g., lbs/day or kg/day). This means that NPDES permit limitations derived from today's rule similarly must be expressed in terms of mass. See 40 CFR 122.45(f). These requirements are for direct discharging facilities. Similar requirements exist for indirect discharging facilities and are found in 40 CFR 403.6(c)(3). In order to convert effluent limitations guidelines and standards expressed as pounds/thousand pounds to a monthly average or daily maximum permit limit, the permitting authority would use a production rate with units of thousand pounds/day. EPA's regulations at 40 CFR 420.04, 122.45(b)(2), and 403.6(c)(3) require that NPDES permit and pretreatment limits be based on a "reasonable measure of actual production," but do not define the term. In its 2000 proposal, EPA solicited comment on whether to codify a definition of that term in Part 420 for the iron and steel category. After considering the comments and reviewing the rulemaking record, EPA has decided not to codify a definition of "reasonable measure of actual production."

Background

As explained above, the current iron and steel regulation does not define what constitutes a "reasonable measure of actual production," although it offers the following examples: "production during the high month of the previous year, or the monthly average for the highest of the previous five years." See 40 CFR 420.04.

EPA believes that some NPDES permitting and pretreatment control authorities have identified production rates that do not reflect a "reasonable measure of actual production" specified at 122.45(b)(2)(I), 403.6(c)(3), and 420.04. In some cases, maximum production rates for similar process units discharging to one treatment system were determined from different years or months, which may provide an unrealistically high measure of actual production. In EPA's view, this would occur if the different process units could not reasonably produce at these high rates simultaneously.

In addition, industry stakeholders have also noted that permitting and pretreatment control authorities interpret the reasonable measure of actual production inconsistently. Accordingly, iron and steel industry stakeholders requested that EPA publish a consistent policy on how to implement this requirement. Industry stakeholders have indicated that (1) in order to promote consistency, EPA should codify the method used to determine appropriate production rates for calculating allowable mass loadings, so that the permit writers can all use the same basis; and (2) EPA should use a high production basis, such as maximum monthly production over the previous five year period or maximum design production, in order to ensure that a facility will not be out of compliance during periods of high production.

2000 Proposal

Because the "reasonable measure of actual production" concept is inconsistently applied, EPA proposed in 2000 to include in its final iron and steel rulemaking specific direction on making this determination. EPA solicited comment on four alternative approaches to implement the "reasonable measure of actual production." See 65 FR at 82,029-31. Each alternative excluded, from the calculation of operating rates, production from unit operations that do not generate or discharge process wastewater. EPA proposed the following four alternative definitions of reasonable measure of actual production: (A) include production only from units that can operate simultaneously; (B) apply multi-tiered permit limits with different limits for different rates of production as defined in Chapter 5 of U.S. EPA NPDES Permit Writers Manual, EPA 833-B-96-003; (C) use the average daily production from the highest production year during the previous five years; and (D) use one of the methods for monthly average limits but use concentration limits for daily maximum limits.

Each alternative had its supporters and detractors in comments. Several commenters preferred alternative A, but incorrectly described the alternative as the high month of production over the past five years. No commenters provided data that showed they would be unable to meet the proposed limits and standards under any of the four alternatives.

Final Rule

At this time, EPA has decided not to revise Section 420.04 in any respect. EPA has also decided not to codify a definition for the term "reasonable measure of actual production" applicable to Part 420. The Agency has thoroughly evaluated all comments supporting other interpretations and is not convinced that departing from past practices is justified here. Consequently, EPA concludes that continuing to allow flexibility to permitting and pretreatment control authorities to apply site-specific factors in determining a reasonable measure of production is appropriate.

16.4.2 Calculating NPDES Permit and Pretreatment Limitations

When promulgating Part 420 in 1982, EPA recognized that cotreating compatible wastewaters in the iron and steel industry is a cost-effective means of wastewater treatment. For this revised rule, EPA carried forward the structure of the 1982 regulation to facilitate cotreatment of compatible wastestreams in centralized treatment systems and to discourage cotreatment of wastestreams that the Agency deems incompatible (e.g., cotreating by-product recovery cokemaking and BOF steelmaking wastewaters, which could increase discharges of toxic pollutants from cokemaking operations). The following table presents groups of subcategories for which the regulation is structured to facilitate cotreatment.

Group 1	Cokemaking		
Group 2	Ironmaking	Sintering	
		Blast furnaces	
Group 3	Carbon Steel	Steelmaking	BOF steelmaking
			Vacuum degassing
			Continuous casting
		Hot forming	
		Steel finishing	
Group 4	Stainless Steel	Steelmaking	BOF steelmaking
			Vacuum degassing
			Continuous casting
		Hot forming	
		Steel finishing	

The Agency selected pollutants for regulation in each of these groups to allow facilities to cotreat their wastestreams where feasible.

The NPDES permit regulations at §122.45(h) provide that where it is not feasible to impose effluent limitations at a final outfall discharging to a receiving water, the permit writer may elect to impose the technology-based effluent limitations at an internal outfall or compliance monitoring station. This is commonly done in NPDES permits for integrated steel mills where treated process wastewater effluents are commingled with noncontact cooling waters and storm waters prior to discharge to a receiving stream through a final outfall.

The remainder of this subsection provides two examples of how to calculate NPDES permit and pretreatment effluent limitations for various combinations of iron and steel manufacturing facilities. Permit writers and control authorities commonly calculate NPDES permit and pretreatment effluent limitations from Part 420 using spreadsheets developed for specific permitted final outfalls or wastewater treatment facilities limited at an internal monitoring station. For example, Table 16-3 is an example spreadsheet that corresponds to Example 1. The spreadsheet shows the daily maximum and monthly average mass loadings for each process, calculated for each regulated pollutant. The resulting mass loadings for each process are summed for each pollutant to determine the respective effluent limitations for the pertinent outfall or wastewater treatment system.

Direct Dischargers

Example 1: Two iron and steel processes within the same category; no nonregulated process wastewater.

In this example, a facility has two blast furnaces and treats their process wastewater in a dedicated blast furnace gas cleaning water treatment and recycle system. The reasonable measure of actual production (NPDES permit production rate) is 4,500 tons/day for one furnace and 3,900 tons/day for the other. The facility also has a sinter plant with wet air pollution controls equipped with a dedicated treatment and recycle system. The facility discharges blowdown from that recycle system into the blast furnace treatment and recycle system; the only discharge from these operations is the blowdown from the blast furnace treatment and recycle system. The NPDES production rate for the sinter plant is 4,100 tons/day.

Table 16-3 presents the calculations illustrating how the effluent limitations guidelines are applied in this case. For this example, the total suspended solids (TSS) and oil and grease (O&G) limitations reflect the BPT limitations from the 1982 regulation. Note that the 2,3,7,8-tetrachlorodibenzofuran (TCDF) limitation applicable to sinter plant wastewater is applied to the combined wastewater discharge from the sinter plant and blast furnaces as a daily maximum concentration limit less than the defined *minimum level* of 10 parts per quadrillion (ppq).[1]

[1]Direct dischargers must demonstrate compliance with the effluent limitations and standards for 2,3,7,8-TCDF at the point after treatment of sinter plant wastewater separately or in combination with blast furnace wastewater, but prior to mixing with any other process or non-process wastewaters or noncontact cooling waters in amounts greater than five percent of the sintering process wastewater flow. See §420.29.

Indirect Dischargers

40 CFR Part 403 classifies wastewater that can be discharged from industrial facilities to POTWs as follows:

- *Regulated* - Wastewater regulated by categorical pretreatment standards, such as those contained in Part 420;
- *Unregulated* - Wastewater that is not regulated by categorical pretreatment standards and is not *dilute* wastewater; and
- *Dilute* - Sanitary wastewater, noncontact cooling water, boiler blowdown, and other wastestreams listed in Appendix D to Part 403.

For indirect iron and steel dischargers whose wastestreams are not cotreated with wastewater from other industrial categories, the control authority would derive mass-based pretreatment limits from the final pretreatment standards similarly to how NPDES permit writers derive limits for direct dischargers. Specifically, the pretreatment authority would apply the pretreatment limits either at the point of discharge from the facility's wastewater treatment facility or at the point of discharge to the POTW, whichever point the control authority determines is appropriate based on site circumstances.

Where the above circumstances apply, and where there are other wastestreams present that would be regulated under the Part 420, the pretreatment authority would calculate the applicable pretreatment limits as described in Example 2. In this case, the pretreatment authority would add incremental mass limits for these wastestreams, as allowed by §420.08, to the limits derived for the regulated wastewater to determine the appropriate pretreatment limits.

Where facilities combine wastewaters regulated under Part 420 and dilute wastewaters, the pretreatment authority can either: (1) apply the pretreatment limits at an internal monitoring point where dilution is not a factor, under authority of §403.6(e)(2) and (4); or, (2) apply mass-based pretreatment limits in terms at a location after the regulated and dilute wastestreams are combined, provided the dilution is not enough to interfere with compliance determinations.

Where facilities cotreat their iron and steel wastewaters with wastewaters from other industrial categories that are regulated by other categorical pretreatment standards, the pretreatment authority can either derive pretreatment standards for the combined wastestreams by using a building-block approach or by using the "combined wastestream formula" provided at §403.6(e) (see Equation 16-1). In most circumstances, pretreatment authorities use a building block approach where mass pretreatment limits are derived from each regulation and added together to develop a mass pretreatment limit for the combined wastewaters.

$$C_T = \frac{\sum C_I F_I}{\sum F_I} \times \frac{F_T - F_D}{F_T} \qquad (16\text{-}1)$$

where:

C_T = The alternate concentration limit for the combined wastestream, mg/L;

C_I = The categorical pretreatment standard concentration limit for a pollutant in the regulated stream I, mg/L;

F_I = The average daily flow of stream I, L/day;

F_D = The average daily flow from dilute wastestreams as defined in Part 403, L/day; and

F_T = The total daily flow, L/day.

See Reference 16-1 for more information on the combined wastestream formula.

As with direct dischargers, when the pretreatment standards applicable to one category regulate a different set of pollutants than the standards applicable to another category, the control authority must ensure that the guidelines are properly applied. If a pollutant is regulated in one wastestream but not another, the control authority must ensure that the nonregulated pollutant stream does not dilute the regulated pollutant stream to the point where pollutants are not analytically detectable. If this level of dilution occurs, the control authority most likely would establish internal monitoring points, as authorized under 40 CFR Part 403.6(e)(2) and (4). Alternatively, if there is reason to believe the pollutant in question is present in the unregulated wastestream at some level, the pretreatment authority may derive supplemental mass limitations for the pollutant in question in the unregulated wastestream using best professional judgment (BPJ).

Example 2 describes how to calculate pretreatment limits for an indirect discharging by-product recovery coke plant where process area storm water and groundwater remediation flow are cotreated with regulated coke plant process wastewaters. In this case, the permit writer would use a process area storm water flow allowance and a long-term average groundwater flow rate to develop supplemental mass effluent limitations based on concentrations used by EPA to develop the by-product recovery coke plant pretreatment standards. Those supplemental mass effluent limitations are added to the categorical effluent limitations to establish the final pretreatment limits applicable to the combined wastewaters. Permit writers and control authorities would use this same approach for both direct and indirect dischargers where compatible non-process wastewaters are present and are cotreated with process wastewaters.

Example 2: Indirectly discharging coke plant; cotreatment of ground water from remediation project.

In this example, an indirect discharging by-product recovery coke plant has an active ground water remediation project that generates a continuous flow of 35 gpm; this wastestream contains benzene, phenol, ammonia as nitrogen, and other pollutants characteristic of coke plant wastewater. Because the untreated ground water is compatible with untreated coke plant process wastewater, EPA determined that it is appropriate to cotreat these two waste streams. In this example, benzene in the ground water would be removed in the ammonia still and returned to the coke oven gas; ammonia would be removed in the ammonia still and downstream treatment; and phenol would be removed either at the coke plant (depending upon the type of treatment provided) or at the POTW. The Agency has determined that phenol is compatible with biological treatment at POTWs and does not pass through.

The coke plant is equipped with process area secondary containment for the by-product recovery area and for the following bulk storage tanks: ammonia liquor, crude coal tar, crude light oil, and untreated wastewater equalization tanks. The facility has the capability to temporarily store a portion of the collected storm water in secondary containment structures and control the rate storm water is pumped to the wastewater treatment system equalization tanks. Based on review of historical daily coke plant wastewater treatment flow monitoring records and daily plant rainfall data, the daily effluent flow was found to increase approximately 5 gpm for one to two days following storm events ranging from 1.0" to 2" per 24 hours. Consequently a process area storm water allowance of 5 gpm was included in the derivation of the pretreatment limitations. Table 16-4 presents the calculations illustrating how the limitations are applied in this case.

The approach used in this example has the same effect as applying the combined wastestream formula from the pretreatment regulations reviewed above; however, the final rule allows both direct and indirect dischargers to treat combinations of regulated and unregulated wastestreams.

16.5 Application of Best Professional Judgement

Section 402(a)(1) of the Clean Water Act (CWA) and the NPDES permit regulations at §122.44(a) and §125.3 allow permit authorities to use BPJ in the absence of categorical effluent limitations to establish NPDES permit limitations. When developing the iron and steel regulation, EPA attempted to minimize the need for BPJ determinations by taking into account process wastewaters commonly generated at each manufacturing process and miscellaneous process-related wastewaters (e.g., those generated in roll shops and from building basement sumps). The Agency recognizes, however, that some sites may generate non-process wastewaters that meet the definition of process wastewater (see §122.2) that were not accounted for in the development of the effluent limitations guidelines and pretreatment standards for existing sources. To assist permit writers in addressing such wastewaters and to minimize the number of requests for fundamentally different factors variances, EPA added a definition of non-process wastewaters at §420.02(r) and included at §420.08 a provision that authorizes permit

writers to provide for increased loadings for wastewater sources not included in the development of the regulation, if these sources generate an increased discharge flow.

When developing NPDES and pretreatment limitations, permit writers and pretreatment control authorities are authorized to use their best professional judgment to include increased mass discharge allowances to account for certain non-process wastewaters when they are appropriately cotreated with process wastewaters using best professional judgement. Non-process wastewaters may include utility wastewaters (for example, water treatment residuals, boiler blowdown, and air pollution control wastewaters from heat recovery equipment); treated or untreated wastewaters from groundwater remediation systems; dewatering water for building foundations; and other wastewater streams not associated with a production process. When considering such non-process wastewaters, permit writers and pretreatment control authorities should determine whether they contain process wastewater pollutants, or whether they would simply be dilution flows. For example, wastewater from coke plant groundwater remediation systems would be expected to contain coke plant wastewater pollutants, whereas building foundation dewatering water would be expected to be relatively clean. In the former case, the permit writer or pretreatment control authority may include additional mass discharges based on the average groundwater remediation flow and the concentrations used by EPA to develop the effluent limitations guidelines and standards in developing the mass limits. In the latter case, no increase in mass discharges may be appropriate.

EPA has provided a definition of storm water in the immediate process area at §420.02(t). EPA has included provisions in the regulation at §420.08 for permit writers and pretreatment control authorities to provide for additional mass discharge allowances for process area storm water, when they deem appropriate. With advances in storm water pollution prevention and spill prevention and control, collecting and treating limited amounts of process area storm water with process wastewaters is the most practicable and effective means of limiting discharges of contaminated storm water. This is particularly the case for by-product recovery coke plants, where contaminated storm water is typically collected from the following operations: tar decanters, ammonia liquor storage, crude tar storage, crude light oil recovery (benzol plant), crude light oil storage, ammonia recovery, ammonium sulfate recovery, and others. Storm water collected from these areas often contains oil & grease and some of the nonconventional and toxic pollutants associated with the by-product recovery processes (e.g., ammonia, cyanide, phenolic compounds, and polynuclear aromatic hydrocarbons). As a result, many coke plants commonly collect storm water from these areas and pump it to the process wastewater equalization tank for treatment with process wastewaters. Because the levels of contaminants and dissolved salts in the collected storm water are relatively low compared to those found in process wastewaters, facilities can also temporarily use storm water in lieu of uncontaminated water to optimize of biological treatment systems.

For other iron and steel processes, EPA believes it is prudent to collect storm water from the area within outdoor wastewater treatment facilities, particularly where wastewater treatment sludges are dewatered and handled at blast furnaces, sinter plants, steelmaking operations, hot forming mills (scale and oil removal as well as wastewater treatment), and steel finishing wastewater treatment plants.

EPA does not advocate unrestricted collection and treatment of process area storm water with process waters, either at by-product recovery coke plants or at facilities in other subcategories. For example, by-product recovery and non-recovery coke plants should use conventional storm water control measures to handle coal and coke pile runoff, storm water from the battery areas, and storm water collected away from the by-products recovery areas. Other examples of storm water that would be either impracticable or uneconomic to treat in process wastewater treatment facilities include building roof storm drainage from hot forming and steel finishing mills and storm drainage from raw material storage areas and plant roadways.

For the steelmaking subcategory, EPA revised BPT, BAT, BCT, and PSES limitations and standards for basic oxygen furnaces with semi-wet air pollution control. EPA has allowed the permit authority or pretreatment control authority to determine limitations based on best professional judgment, when safety considerations warrant. The Agency believes best professional judgment will allow the permit authority or pretreatment control authority to reflect the site-specific nature of the discharge. EPA is doing this because, although the 1982 regulation requires basic oxygen furnace semi-wet air pollution control to achieve zero discharge of process wastewater pollutants, currently not all of the sites are able to achieve this discharge status because of safety and operational considerations which preclude some sites from balancing the water applied for BOF gas conditioning with evaporative losses to achieve zero discharge. The Agency recognizes the benefit of using excess water in basic oxygen furnaces with semi-wet air pollution control systems in cases where safety considerations are present. The Agency justifies the increased allowance in this case because of the employee safety and manufacturing considerations (reduced production equipment damage and lost production).

16.6 Water Bubble

The "water bubble" is a regulatory mechanism provided in the current regulation at 40 CFR 420.03 to allow for trading of identical pollutants at any single steel facility with multiple compliance points. The bubble has been used at some facilities to realize cost savings and/or facilitate compliance.

The water bubble provision in the 1982 rule had the following restrictions:

- Trades can be made only for like pollutants (e.g., lead for lead, not lead for zinc);
- Alternative effluent limitations resulting from the application of the water bubble must comply with applicable water quality standards;
- Each outfall must have specific, fixed limitations for the term of the permit;
- Trades involving cokemaking and cold rolling operations are prohibited;

- Each trade must result in a minimum net reduction in pollutant loading (15 percent for TSS and O&G, and 10 percent for all other traded pollutants); and

- Only existing sources may apply the water bubble.

The water bubble provisions from the 1982 regulation were carried forward in the current regulation, with the modifications described in the preamble, including the following:

- Water bubble trades are allowed for new sources and for new Subpart M operations;

- Water bubble trades for cokemaking and cold rolling operations are now authorized;

- Water bubble trades for cokemaking operations are authorized only when the alternative limitations are more stringent than the Subpart A limitations otherwise applicable to those operations;

- Water bubble trades for O&G are prohibited;

- Water bubble trades for 2,3,7,8-TCDF in sintering operations are prohibited; and

- Eliminate the minimum net reduction provisions (formerly codified at 40 CFR 420.03(b)).

The water bubble provisions allow alternative effluent limitations where a facility, in effect, trades pollutant discharges from one outfall or NPDES permit compliance monitoring point to another. Unlike variances, facilities may request to apply the water bubble wherever they can meet the conditions governing its use. Permit authorities are authorized to include effluent limitations in water bubble trades in NPDES permits in permit applications and renewals.

For the final rule, EPA is prohibiting trading of O&G between outfalls. EPA is concerned that different process units may discharge different types of O&G, and that trading might increase the amount of a more environmentally harmful type of O&G (e.g., petroleum-based), while reducing the amount of a less harmful type (e.g., animal fats).

When estimating the incremental investment and operating and maintenance costs associated with the final regulation, the Agency assumed that no facilities would use the water bubble. Consequently, any use of the water bubble would represent cost savings.

16.7 Ammonia Waiver

For the final rule, EPA promulgated pretreatment standards for ammonia (as N) for the cokemaking and sintering subcategories because of the high loads of ammonia in wastewaters from those subcategories to POTWs that do not have nitrification capability. However, EPA was aware that some POTWs treating wastewaters from these subcategories have nitrification capability. EPA received several compelling comments supporting an ammonia standard waiver in these cases and encouraging EPA to provide this mechanism for the cokemaking, sintering, and ironmaking subcategories. No commenters opposed this mechanism. EPA concludes that an ammonia standard waiver will be equally protective of the environment and lead to potential savings for some iron and steel facilities. Thus, the final rule specifies that ammonia (as N) pretreatment standards do not apply to cokemaking, ironmaking, and sintering facilities discharging to POTWs with nitrification capability. As a further point of clarification, EPA defines nitrification at §420.02(s) as follows:

> "...means oxidation of ammonium salts to nitrites (via Nitrosomas bacteria) and the further oxidation of nitrite to nitrate via Nitrobacter bacteria. Nitrification can be accomplished in either: (1) a single or two-stage activated sludge wastewater treatment system; or (2) wetlands specifically developed with a marsh/pond configuration and maintained for the express purpose of removing ammonia-N.
>
> Indicators of nitrification capability are: (1) biological monitoring for ammonia oxidizing bacteria (AOB) and nitrite oxidizing bacteria (NOB) to determine if the nitrification is occurring; and (2) analysis of the nitrogen balance to determine if nitrifying bacteria reduce the amount of ammonia and increase the amount of nitrite and nitrate."

While EPA has included the option of an ammonia waiver for those facilities discharging to POTWs that nitrify, the Agency determined a certification requirement was unnecessary in the final rule and that pretreatment control authorities can best determine whether or not a POTW has nitrification capability. The pretreatment control authorities issuing POTW individual control mechanisms to iron and steel facilities will determine whether pretreatment standards for ammonia (as N) are applicable using the definition of nitrification provided at §420.02(s) of the final rule.

16.8 Compliance Monitoring

Permit writers and control authorities must establish requirements for regulated facilities to monitor their effluent to ensure that they are complying with permit limitations. As specified in 40 CFR Parts 122.41, 122.44, and 122.48, all NPDES permits must specify requirements for using, maintaining, and installing (if appropriate) monitoring equipment; monitoring type, intervals, and frequencies that will provide representative data; analytical methods; and reporting and record keeping. The NPDES program requires permittees (with certain specific exceptions) to monitor for limited pollutants and report data at least once per year. Control authorities must generally require similar monitoring techniques and frequencies

for indirect dischargers, but 40 CFR 403.12(e) requires twice per year reporting for industrial users (rather than once per year for direct dischargers).

The NPDES permit regulations at §122.41(j)(4) and the pretreatment regulations at §403.12(g) require that facilities conduct sampling and analyses to monitor compliance according to the techniques specified at 40 CFR Part 136, as amended. Table 16-5 presents the sampling and analytical methods for those pollutants regulated under Part 420 (see Part 136 for the specific analytical methods for sample handling, sample holding time, and approved sample containers).

Except as noted below, the Agency has not promulgated specific monitoring requirements or monitoring frequencies in the iron and steel regulation; therefore, permit authorities may establish monitoring requirements and monitoring frequencies at their discretion. Sections 16.8.1 through 16.8.3 provide guidance for establishing those requirements. EPA has specified the point of compliance monitoring to demonstrate compliance with the pretreatment standards for 2,3,7,8-TCDF for the sintering subcategory. This exception is described in Section 16.8.3.

16.8.1 Sample Types

EPA recommends flow-proportioned, 24-hour composite samples for the following pollutants:

- TSS;
- Ammonia (as N);
- Total cyanide;
- Total phenolics;
- 2,3,7,8-TCDF;
- Benzo(a)pyrene; and
- Naphthalene.

Part 136 requires facilities to collect grab samples for O&G. Several iron and steel permits are written to require collection of three grab samples for O&G in a 24-hour monitoring day, with the results averaged to represent a daily sample. The sample types for pH can range from a one-time grab sample during a monitoring day for operations where pH is usually not a control parameter (e.g., continuous casting, hot forming) to continuous sampling where pH is a critical aspect of the wastewater to be treated or a critical control parameter for operation of wastewater treatment facilities (e.g., steel finishing and other subcategories where metals precipitation is a control technology).

16.8.2 Monitoring Frequency

The monitoring frequencies specified in iron and steel NPDES and POTW permits vary depending upon the size of the facility, potential impacts on receiving waters, compliance history, and other factors, including monitoring policies or regulations required by

permit authorities. A few iron and steel permits for large mills have required monitoring for all regulated pollutants as frequently as five times per week. Other permits for less complex facilities require twice monthly monitoring. When developing the revisions to Part 420, EPA considered a monitoring frequency of once per week for regulated pollutants, except for 2,3,7,8-TCDF, for which the Agency considered a monthly monitoring frequency. Most permits for iron and steel facilities require facilities to continuously monitor and record their discharge flow rates and report daily 24-hour total flow.

Facilities may monitor effluent more frequently than specified in their permits; however, the results must be reported in accordance with §122.41(l)(4)(ii) for direct dischargers or with §403.12(g)(5) for indirect dischargers.

16.8.3 Compliance Monitoring Locations

The NPDES permit regulations at §122.41(j)(1) require that monitoring samples and measurements be representative of the monitored activity; §125.3(e) requires that technology-based effluent limits be applied prior to or at the point of discharge. See also §122.44(i) and §122.45(h). The pretreatment regulations at §403.12(g)(3) are analogous to NPDES permit regulations at §122.41(j)(1). The choice of monitoring location for use of the combined wastestream formula is §403.6(e)(4). The pretreatment regulations at §403(d) prohibit facilities from diluting their wastewater to meet categorical pretreatment standards. The discharge from a wastewater treatment facility is usually a point where measurements will be most representative of the treated effluent. Under circumstances where dilution with relatively low volumes of noncontact cooling water or storm water will not interfere with compliance determinations, permit writers may apply the technology-based effluent limits at the point of discharge to a receiving water or to a POTW.

EPA specifies the point of compliance monitoring to demonstrate compliance with the effluent limitations guidelines and standards for 2,3,7,8-TCDF for the sintering subcategory (see §420.29). For sintering direct dischargers, compliance is determined at the point after treatment of sinter plant wastewater separately or in combination with blast furnace wastewater, but prior to mixing with process wastewaters from processes other than sintering and ironmaking, non-process wastewaters, and noncontact cooling water in an amount greater than 5 percent by volume of the sintering process wastewaters. For sintering indirect dischargers, compliance is determined at the point after treatment of sinter plant wastewater separately or in combination with blast furnace wastewater, but prior to mixing with process wastewaters from processes other than sintering and ironmaking, non-process wastewaters, and noncontact cooling waters.

EPA has given permit writers the flexibility to apply pH effluent limitations at the point of discharge from a wastewater treatment facility or at the point of discharge to a receiving water (see §420.07). This mechanism is designed to prevent the need for facilities to reneutralize their treated wastewater to a pH of 6.0 to 9.0 if they can achieve the same end by mixing treated wastewater with nonregulated wastewater, such as large volumes of noncontact cooling water.

16.9 NPDES Permit and Pretreatment Variances and Exclusions

The CWA and the NPDES permit regulations allow certain variances from technology-based effluent limitations guidelines and standards for exceptional cases. The water bubble provisions of Part 420 allow alternative effluent limitations where a facility can trade pollutant discharges from one outfall or NPDES permit compliance monitoring point to another. Unlike variances, facilities may use the water bubble wherever they can meet the water bubble conditions. The permit writer develops the variance and alternative limitations during the time of draft permit renewal so that the variance and alternative limitations are subject to public review and comment at the same time the entire permit is put on public notice. The variance and alternative limitations remain in effect for the term of a permit, unless the permit writer modifies it prior to expiration.

A permit applicant must meet specific data requirements before a variance is granted. As the term implies, a variance is an unusual situation, and the permit writer should not expect to routinely receive variance requests. The permit writer should consult 40 CFR §124.62 for procedures on making decisions on the different types of variances.

16.9.1 Economic Variances

Section 301(c) of the CWA allows a variance for nonconventional pollutants from technology-based BAT effluent limitations due to economic factors, at the request of the facility and on a case-by-case basis. There are no implementing regulations for §301(c); rather, variance requests must be made and reviewed based on the statutory language in §301(c). The economic variance may also apply to nonguideline limits in accordance with 40 CFR §122.21(m)(2)(ii). The applicant normally files the request for a variance from effluent limitations developed from BAT guidelines during the public notice period for the draft permit. Other filing time periods may apply, as specified in 40 CFR §122.21(m)(2). The variance application must show that the modified requirements:

1) Represent the maximum use of technology within the economic capability of the owner or operator; and

2) Result in further progress toward the goal of discharging no process wastewater.

Facilities in industrial categories other than utilities must conduct three financial tests to determine if they are eligible for a 301(c) variance. Guidance for conducting the financial tests is available from EPA's Office of Wastewater Management. Generally, EPA will grant a variance only if all three tests indicate that the required pollution control is not economically achievable, and the applicant makes the requisite demonstration regarding "reasonable further progress."

With respect to the second requirement for a 301(c) modification, the applicant must, at a minimum, demonstrate compliance with all applicable BPT limitations and pertinent

water-quality standards. In addition, the proposed alternative requirements must reasonably improve the applicant's discharge.

16.9.2 Variances Based on Localized Environmental Factors

Section 301(g) of the CWA allows a variance for certain nonconventional pollutants (ammonia, chlorine, color, iron, and total phenols) from BAT effluent limitations guidelines due to local environmental factors. The discharger must file a variance application that shows the following:

- The modified requirements result in compliance with BPT and water-quality standards of the receiving stream.
- Other point or nonpoint source discharges will not need additional treatment as a result of the variance approval.
- The modified requirements will not interfere with protection of public water supplies or with protection and propagation of a balanced population of shellfish, fish, and wildfowl, and will allow recreational activities in and on the water. Also, the modified requirements will not result in quantities of pollutants that may reasonably be anticipated to pose an unacceptable risk to human health or the environment, cause acute or chronic toxicity, or promote synergistic properties.

Section 301(g) also allows petitioners to add other nonconventional pollutants to the variance list in their petition. The petitioner must demonstrate that the pollutants do not exhibit the characteristics of toxic pollutants. Certain time restrictions and other conditions also apply (see §301(g)(4)(C)).

Permit writers must review the request to ensure that it complies with each of the requirements for this type of variance. The 301(g) variance request involves significant water-quality assessment, including aquatic toxicity, mixing zone, and dilution model analyses, and the possible development of site-specific criteria. In addition, the permit writer must assess many complex human health effects, including carcinogenicity, teratogenicity, mutagenicity, bioaccumulation, and synergistic propensities. Permit writers should use EPA's Draft 301(g) Technical Guidance Manual (Reference 16-2) in assessing variance requests.

Several Section 301(g) variances have been granted for iron and steel facilities. Most of these have been for ammonia as nitrogen and total phenols discharged from blast furnace operations.

16.9.3 Central Treatment Provision

Under 40 CFR 420.01(b), the central treatment provision of the 1982 iron and steel regulation, EPA identified 21 facilities that were temporarily excluded from the provisions

of Part 420 because of economic considerations. This exclusion would not be granted unless the owner or operator of the facility requested the Agency to consider establishing alternative effluent limitations and provided the Agency with certain information consistent with 40 CFR 420.01(b)(2) on or before July 26, 1982. See 47 FR 23285 (May 27, 1982).

The Agency did not receive any comments supporting the removal of the central treatment provision. Rather, commenters asked EPA to expand the provision because they were concerned that the costs of the proposed rule would be too high if the limits and standards were made more stringent. Commenters stated that economic conditions were similar to those in 1982 and that the central treatment provision should remain a viable compliance option in Part 420.

EPA disagrees with commenters that it should expand the central treatment provision. Because of the prevailing economic situation in the iron and steel industry, technological reasons in some subcategories, and performance issues in others, EPA has decided to go forward with new or revised regulations for only four subcategories (cokemaking, sintering, steelmaking, and a subcategory for other operations). The final rule has minimal impact on the 21 eligible mills. With the substantially reduced projected economic burden on the industry, the Agency does not believe that expanding § 420.01(b)(2) is necessary.

The final rule leaves the central treatment provision (§ 420.01(b)(2)) unchanged from the 1982 regulation. This allows any mill whose permit is based on this provision to continue to use it, but does not extend the provision to any additional mills.

16.10 References

16-1 U.S. Environmental Protection Agency. Guidance Manual for the Use of Production-Based Pretreatment Standards and the Combined Wastestream Formula. EPA 833/B-85-201, Washington, DC, September 1985.

16-2 U.S. Environmental Protection Agency. Draft 301(g) Technical Guidance Manual. Washington, DC, 1984.

Table 16-1

40 CFR Part 420 - Subcategorization

1982/1984 Part 420	Current Part 420
A. Cokemaking By-product recovery cokemaking - iron and steel By-product recovery cokemaking- merchant Beehive cokemaking	A. Cokemaking *BPT, BCT* By-product recovery cokemaking - iron and steel By-product recovery cokemaking - merchant Non-recovery cokemaking *BAT, NSPS, PSES, PSNS* By-product recovery cokemaking Non-recovery cokemaking
B. Sintering	B. Sintering with wet air pollution control systems with dry air pollution control systems
C. Ironmaking Iron blast furnace Ferromanganese blast furnace	C. Ironmaking Iron blast furnace
D. Steelmaking BOF, EAF - semi-wet BOF - wet, suppressed combustion BOF, open hearth, EAF - wet	D. Steelmaking EAF - semi-wet BOF - wet-open combustion EAF - wet BOF - wet-suppressed combustion BOF - semi-wet
E. Vacuum Degassing	E. Vacuum Degassing
F. Continuous Casting	F. Continuous Casting
G. Hot Forming Primary mills - carbon and specialty without scarfing with scarfing Section mills carbon specialty Flat mills hot strip and sheet - carbon and specialty carbon plate mills specialty plate mills Pipe and tube mills - carbon and specialty	G. Hot Forming Primary mills - carbon and specialty without scarfing with scarfing Section mills carbon specialty Flat mills hot strip and sheet - carbon and specialty carbon plate mills specialty plate mills Pipe and tube mills - carbon and specialty

Table 16-1 (Continued)

1982/1984 Part 420	Current Part 420
H. Salt Bath Descaling Oxidizing batch - sheet and plate batch - rod and wire batch - pipe and tube continuous Reducing batch continuous	H. Salt Bath Descaling Oxidizing batch - sheet and plate *batch - rod and wire* *batch - pipe and tube* continuous Reducing *batch* continuous
I. Acid Pickling Sulfuric acid (spent acids & rinses) rod, wire and coil bar, billet and bloom strip, sheet and plate pipe, tube and other products fume scrubbers Hydrochloric acid (spent acids & rinses) rod, wire and coil strip, sheet and plate pipe, tube and other products fume scrubbers acid regeneration (absorber vent scrubber) Combination acid pickling (spent acids & rinses) rod, wire and coil bar, billet and bloom strip, sheet and plate- continuous strip, sheet and plate - batch pipe, tube and other products fume scrubbers	I. Acid Pickling Sulfuric acid (spent acids & rinses) *rod, wire and coil* bar, billet and bloom strip, sheet and plate *pipe, tube and other products* fume scrubbers Hydrochloric acid (spent acids & rinses) *rod, wire and coil* strip, sheet and plate *pipe, tube and other products* fume scrubbers acid regeneration (absorber vent scrubber) Combination acid pickling (spent acids & rinses) rod, wire and coil bar, billet and bloom strip, sheet and plate- continuous strip, sheet and plate - batch pipe, tube and other products fume scrubbers
J. Cold Forming Cold rolling mills recirculation- single stand recirculation- multiple stands combination direct application - single stand direct application - multiple stands Cold worked pipe and tube using water using oil solutions	J. Cold Forming Cold rolling mills recirculation- single stand recirculation- multiple stands combination direct application - single stand direct application - multiple stands *Cold worked pipe and tube* *using water* *using oil solutions*
K. Alkaline Cleaning Batch Continuous	K. Alkaline Cleaning Batch Continuous

Table 16-1 (Continued)

1982/1984 Part 420	Current Part 420
L. Hot Coating Galvanizing, terne coating and other coatings strip, sheet and miscellaneous products Galvanizing and other coatings wire products and fasteners Fume Scrubbers	L. Hot Coating Galvanizing, terne coating and other coatings strip, sheet and miscellaneous products *Galvanizing and other coatings wire products and fasteners* Fume Scrubbers
	M. Other Operations Direct-reduced iron Forging Briquetting

Table 16-2

40 CFR Part 420 - Process and Non-Process Wastewaters

Manufacturing Operations	Process Wastewaters	Non-Process Wastewaters
A. Cokemaking		
By-product recovery coke plants	Waste ammonia liquor Coke oven gas desulfurization wastewater Crude light oil wastewaters Ammonia still operation wastewater Coke oven gas condensates Final gas cooler blowdown Wastewater from barometric condensers Wastewaters from NESHAP controls Wastewater from wet air pollution control Other miscellaneous process wastewaters Biological treatment control water	Wastewaters from groundwater remediation systems Storm waters from the immediate process area
Non-recovery coke plants	None	Process water treatment residuals Boiler blowdown Wastewater from wet air pollution control from heat recovery Storm waters from the immediate process area
B. Sintering	Wastewaters from wet air pollution control Sinter cooling wastewater Wastewaters from belt spray and equipment cleaning	
C. Ironmaking	Wastewaters from blast furnace gas cooling and gas cleaning operations Blast furnace gas seal wastewater Blast furnace drip leg wastewater Wastewater from pump seals and equipment cleaning	
D. Steelmaking	Wastewaters from semi-wet and wet air pollution control systems	Wastewaters from BOF groundwater remediation systems
E. Vacuum Degassing	Direct gas contact vacuum system water	
F. Continuous Casting	Direct contact spray system wastewater Leaks from mold and machine cooling water system Flume flush wastewater Wastewater from equipment cleaning	Wastewater from caster mold and machine cooling

Table 16-2 (Continued)

Manufacturing Operations	Process Wastewaters	Non-Process Wastewaters
G. Hot Forming	Descaling wastewater Flume flush water Direct contact roll cooling water Direct contact product cooling water Roll shop wastewaters Leaks and losses from mill lubricating systems Scarfer emissions control wastewater Wastewater from shear and saw cooling Wastewater collected in basement sumps Wastewater from equipment cleaning	Noncontact cooling water for reheat furnaces
H. Salt Bath Descaling	Rinse waters Fume scrubber water Quench water Drag-out and other losses from salt baths	
I. Acid Pickling	Rinse waters Fume scrubber waters Spent acid solutions Wastewater from wet looping pits Leaks and spills collected in process area secondary containment Wastewater from raw materials handling Wastewater from tank cleanouts	
J. Cold Forming	Spent rolling solutions (rolling oils, detergents, cleaners) Roll shop wastewaters Wastewater colleted in basement sumps	
K. Alkaline Cleaning	Rinse waters Spent cleaning baths Wastewater from tank cleanouts	
L. Hot Coating	Rinse waters Fume scrubber waters Acid and alkaline cleaning solution losses Losses of coating line flux solutions Wastewater from tank cleanouts	
M. Other Operations		
Direct-Reduced Iron	Wastewaters from wet air pollution control	
Briquetting	none	
Forging	Direct contact cooling water Losses from hydraulic and lubricating systems	

Table 16-3

Example 1: Application of 40 CFR Part 420 Direct Discharge Blast Furnaces and Sinter Plant

BPT/BAT												
Operation	Production (tons/day)	Total Suspended Solids		Oil & Grease		Ammonia-N		Total Cyanide		Phenol		Units
		Maximum	Average	Maximum	Average	Maximum	Average	Maximum	Average	Maximum	Average	
Blast furnace A §420.32(a)/§420.33(a)	4,500	0.0782	0.026	--	--	0.00876	0.00292	0.00175	0.000876	0.0000584	0.0000292	lbs/1,000 lb
		704	234			79	26.3	15.8	7.88	0.526	0.263	lbs/day
Blast furnace B §420.32(a)/§420.33(a)	3,900	0.0782	0.026	--	--	0.00876	0.00292	0.00175	0.00088	0.0000584	0.0000292	lbs/1,000 lb
		610	203			68	22.8	13.7	6.83	0.456	0.228	lbs/day
Sintering §420.22/§420.23	4,100	0.0751	0.025	0.015	0.00501	0.015	0.00501	0.003	0.0015	0.0001	0.0000501	lbs/1,000 lb
		616	205	123	41.1	123	41.1	24.6	12.3	0.820	0.411	lbs/day
NPDES Permit Limits												
Total Mass Limitations (lbs/day)		**1,930**	**642**	**123**	**41.1**	**270**	**90.1**	**54.0**	**27.0**	**1.80**	**0.70**	
Total Mass Limitations (kg/day)		**875**	**291**	**55.8**	**18.6**	**122**	**40.9**	**24.5**	**12.2**	**0.82**	**0.32**	

BPT/BAT												
Operation	Production (tons/day)	Total Lead		Total Zinc		Total Residual Chlorine		2,3,7,8-TCDF				Units
		Maximum	Average	Maximum	Average	Maximum	Average	Maximum	Average			
Blast furnace A §420.32(a)/§420.33(a)	4,500	0.000263	0.0000876	0.000394	0.000131	0.000146	--	--	--			lbs/1,000 lb
		2.37	0.788	3.55	1.18	1.31						lbs/day
Blast furnace B §420.32(a)/§420.33(a)	3,900	0.000263	0.0000876	0.000394	0.000131	0.000146	--	--	--			lbs/1,000 lb
		2.05	0.683	3.07	1.02	1.14						lbs/day
Sintering §420.22/§420.23	4,100	0.000451	0.00015	0.000676	0.000225	0.00025	--	<ML	--			lbs/1,000 lb
		3.70	1.23	5.54	1.85	2.05						lbs/day
NPDES Permit Limits												
Total Mass Limitations (lbs/day)		**8.12**	**2.70**	**12.16**	**4.05**	**4.50**						
Total Mass Limitations (kg/day)		**3.68**	**1.22**	**5.51**	**1.83**	**2.04**						
Other Limitations								**ND (10 ppq)**				

NOTE: Effluent limits for total residual chlorine are applicable only if the effluent is chlorinated as part of process wastewater treatment. ND - Not detected (detection limit), and ML - minimum level.

Table 16-4

Example 2: Application of 40 CFR Part 420 Indirect Discharge Coke Plant

PSES - Pretreatment Standards for Existing Sources								
Operation	**Production (tons/day)**	**Ammonia - N**		**Total Cyanide**		**Naphthalene**		**Units**
		Maximum	**Average**	**Maximum**	**Average**	**Maximum**	**Average**	
Cokemaking 40CFR 420.15(a)	4430	0.0333	0.0200	0.00724	0.00506	0.0000472	0.0000392	lbs/1,000 lb
		295	177	64	45	0.418	0.347	lbs/day
Ground Water Remediation	35	70.6	42.5	15.4	10.7	26.1	21.7	mg/l
	gpm	29.7	17.9	6.46	4.51	11	9.12	lbs/day
Process Area Storm Water	5	70.6	42.5	15.4	10.7	26.1	21.7	mg/l
	gpm	4.24	2.55	0.923	0.644	1.57	1.3	lbs/day
Pretreatment Limitations								
Total Mass Limitations (lbs/day)		**329**	**198**	**71.5**	**50**	**12.9**	**10.8**	
Total Mass Limitations (kg/day)		**149**	**89.6**	**32.4**	**22.7**	**5.87**	**4.88**	

Table 16-5

List of Approved Test Methods for Pollutants Regulated Under the Final Rule for the Iron and Steel Point Source Category

Parameter and Units	Method				
	EPA (a)	STD Method 18th ed.	ASTM	USGS (a)	Other
Conventional Pollutants					
Total suspended solids, mg/L Gravimetric, 103°-105°, post washing of residue	160.2	2540 D		I-3765-85	
Oil and grease, hexane extractable material (HEM), mg/L n-Hexane extraction and gravimetry (a)	1664, Rev. A				
pH, pH units Eletrometric measurement, or Automated electrode	150.1	4500 H^+B	D1293-84(90)(A or B)	I-1586-85	973.41 (a) Note (a)
Nonconventional Pollutants					
2,3,7,8 TCDF (CAS 51207-31-9) GC/MS	1613				
Ammonia as nitrogen, mg/L (CAS 7664-41-7) Manual distillation (at pH 9.5) (a) followed by... Nesslerization Titration Electrode Automated phenate, or Automated electrode	 350.2 350.2 350.2 350.3 350.1	 4500-NH_3 B 4500-NH_3 C 4500-NH_3 E 4500-NH_3 F or G 4500-NH_3 H	 D1426-93(A) D1426-93(B)	 I-3520-85 I-4523-85	 973.49 (a) 973.49 (a) Note 7
Phenols, total, mg/L Manual distillation (a) followed by: Colorimetric (4AAP) manual, or Automated (a)	 420.1 420.1 420.2				 Note (a) Note (a)
Priority Pollutants					
Cyanide, total, mg/L (CAS 57-12-5) Manual distillation with $MgCl_2$ followed by Titrimetric, or Spectrophotometric, manual or Automated (a)	 335.2 (a) 335.3 (a)	 4500-CN C 4500-CN D 4500-CN E	 D2036-91(A) D2036-91(A)	 I-3300-85	 p.22 (a)
Benzo-a-pyrene (CAS 50-32-8) GC GC/MS HPLC	 610 625, 1625 610	6410 B, 6440 B	D4657-92		

Table 16-5 (Continued)

Parameter and Units	Method				
	EPA (a)	STD Method 18th ed.	ASTM	USGS (a)	Other
Priority Pollutants (continued)					
Naphthalene (CAS 91-20-3)		6410 B, 6440 B			
GC	610				
GC/MS	625, 1625				
HPLC	610				

(a) - See 40 CFR Part 136 for footnotes and note references.
CAS: Chemical Abstracts Service.

SECTION 17

GLOSSARY

Acid Cleaning. Treatment of steel surfaces with relatively mild acid solutions to remove surface dirt and light oxide coatings. Scale and/or heavy oxide removal is considered acid pickling (see below). Acid cleaning operations are typically conducted for surface preparation prior to application of hot dip or electrolytic metal coating and after cold forming and annealing operations.

Acid Pickling. Scale and/or oxide removal from steel surfaces using relatively strong acid solutions. Acid pickling operations are typically conducted after hot forming operations and prior to subsequent steel finishing operations (e.g., cold forming, annealing, alkaline cleaning, metal coatings).

Acid Regeneration. Treatment of spent acid solutions by thermal and/or chemical means to produce usable acid solutions and iron-rich by-products.

Act. The Clean Water Act.

Administrator. The Administrator of the U.S. Environmental Protection Agency.

Agency. U.S. Environmental Protection Agency (also referred to as "EPA").

Agglomeration. The process of binding materials. See definitions for briquetting, nodulizing, pelletizing, and sintering.

Alkaline Cleaning. Application of solutions containing caustic soda, soda ash, alkaline silicates, or alkaline phosphates to a metal surface primarily to remove mineral deposits, animal fats, and oils.

Alloy. A substance that has metallic properties and is composed of two or more chemical elements of which at least one is a metal.

Alloy Steel. Steel is classified as alloy when the maximum of the range given for the content of alloying elements exceeds one or more of the following: manganese, 1.65 percent; silicon, 0.60 percent; copper, 0.60 percent; or in which a definite range or a definite minimum quantity of any of the following elements is specified or required within the limits of the recognized field of constructional alloy steels: aluminum, boron, chromium (less than 10 percent), cobalt, lead, molybdenum, nickel, niobium (columbium), titanium, tungsten, vanadium, zirconium, or any other alloying element added to obtain a desired alloying effect.

Alloying Materials. Additives to steelmaking processes to improve the properties of the finished products. Chief alloying elements in medium alloy steels are: nickel, chromium, manganese, molybdenum, vanadium, silicon, and copper.

Ammonia, Free and Fixed. Free ammonia is ammonia present in a form that is readily dissociated by heat, such as ammonium carbonate. Fixed ammonia is ammonia present in a form which requires the presence of a strong alkali to affect displacement of the ammonia from the compound in which it is present, such as ammonium chloride.

Ammonia Liquor (or Flushing Liquor). An aqueous solution used to condense moisture and tars from coke oven gas derived from coals charged to a by-product recovery coke oven battery. Excess ammonia liquor, or waste ammonia liquor, is flushing liquor rejected from the flushing liquor recirculating loop through the coke oven gas collecting mains and the coal tar decanter, and generally comprises the free and bound moisture contained in the coal charge to the by-product coke ovens. Weak ammonia liquor is ammonia liquor that has been processed in a free or fixed ammonia distillation column (ammonia still) for ammonia recovery to the coke oven gas stream prior to recovery of ammonium sulfate, anhydrous ammonia, or other by-product ammonium compounds.

Ammonia Still. A steam-stripping column in which ammonia and acid gases (hydrogen cyanide, hydrogen sulfide) are removed from waste ammonia liquor and other ammonia-containing wastewaters. A "free" still operates with steam only, with no alkali addition, to remove ammonia and acid gases. A "fixed" still is similar to a "free" still except lime, or more commonly sodium hydroxide, is added to the liquor to liberate ammonia from its compounds so it can be steam stripped.

Angle. A very common structural or bar shape with two legs of equal or unequal length intersecting at 90 degrees.

Annealing. A heat treatment process in which steel is exposed to an elevated temperature in a controlled atmosphere for an extended period of time and then cooled. Annealing is performed to relieve stresses; increase softness, ductility, and toughness; and/or to produce a specific microstructure in the steel.

Argon Bubbling. Injection of argon into molten metal for rapid and uniform mixing of alloys, temperature homogenization, adjustment of chemical composition, and partial removal of non-metallic inclusions. Argon bubbling methods include argon stirring, trimming, and rinsing.

Argon/Oxygen Decarburization (AOD). A process by which an electric arc furnace heat is decarburized by blowing argon and oxygen into the steel at varying ratios.

AWQC. Ambient Water Quality Criteria.

Baghouse. A dry air pollution control device comprising an enclosure containing multiple fabric filter elements (bags) for removal of particulate matter from gas streams.

Bar. Produced from ingots, blooms, or billets covering the following range: rounds, 3/8 to 8-1/4 inches inclusive; squares, 3/8 to 5-1/2 inches; round-cornered squares, 3/8 to 8 inches inclusive;

hexagons, 1/4 to 4-1/16 inches inclusive; flats, 13/64 inches and over in specified thicknesses and not over 6 inches specified width.

Basic Oxygen Furnace (BOF). Pear-shaped, refractory-lined vessel used to convert a charge of molten iron and steel scrap into molten steel by the injection of high pressure oxygen into the furnace bath.

Basic Oxygen Furnace (BOF) Shop. A building or structure containing one or more basic oxygen furnaces and ancillary processes and equipment (e.g., hot metal desulfurization, hot metal charging, scrap charging, oxygen and flux additions, furnace tapping, ladle preparation, deslagging and slag handling, and primary and secondary air emission control equipment).

Basic Oxygen Steelmaking. Steelmaking process carried out in a basic lined furnace shaped like a pear. High-pressure oxygen is blown vertically downward on the surface of the molten iron through a water-cooled lance.

BAT. Best available technology economically achievable, as defined by section 304(b)(2)(B) of the Clean Water Act. See also Effluent Limitations Guidelines and Standards.

Battery. See By-Product Recovery Coke Battery.

BCT. Best conventional pollutant control technology, as defined by section 304(b)(4) of the Clean Water Act. See also Effluent Limitations Guidelines and Standards.

Beam. A member of the structural steel family. Beams come in three varieties: the standard H, I, and the wide flange used for weight-supporting purposes.

Beneficiate. To upgrade the iron content of iron-bearing materials.

Billet. A semi-finished piece of steel formed by casting or from hot rolling an ingot or a bloom. It may be square, but is never more than twice as wide as thick. Its cross-sectional area is usually not more than 36 square inches.

Blast Cleaning. Abrasive grit blasting of steel to remove scale; used in place of or in combination with acid pickling.

Blast Furnace. A large conical-shaped furnace used to reduce and melt iron-bearing materials to molten iron as the primary product. By-products include combustible blast furnace gas and blast furnace slag.

Blast Furnace Charge. The raw materials added to the blast furnace that react when heated to produce molten iron. The principal raw materials charged to blast furnaces include coke, limestone, beneficiated iron ores, and sinter.

Blast Furnace Gas Seals. Water-flooded seals located on a blast furnace gas main for collection and removal of blast furnace gas condensate from the blast furnace gas main. Blast furnace gas seal water is contaminated with pollutants associated with blast furnace operations (e.g., ammonia-N, cyanide, phenolic compounds).

Bloom. A semi-finished piece of steel formed by casting or from hot rolling or forging of an ingot. A bloom is square or not more than twice as wide as thick. Its cross-sectional area is usually not less than 36 square inches.

Blowdown. The partial discharge of water from a recirculating process or cooling water system to correct hydraulic imbalances in the recirculating system or to control concentrations of substances in the recirculating water.

BMP. Best management practices, as defined by section 304(e) of the Clean Water Act or as authorized by section 402 of the Clean Water Act.

BOD_5. Five-day biochemical oxygen demand. A measure of biochemical decomposition of organic matter in a water sample. It is determined by measuring the dissolved oxygen consumed by microorganisms to oxidize the organic contaminants in a water sample under standard laboratory conditions of five days and 20°C. BOD_5 is not related to the oxygen requirements in chemical combustion.

Bosh. The section of the blast furnace between the hearth and the stack, where melting of iron starts.

BPT. Best practicable control technology currently available, as defined by section 304(b)(1) of the Clean Water Act. See also Effluent Limitations Guidelines and Standards.

Briquetting. A hot or cold process that agglomerates (presses together) iron-bearing materials into small lumps without melting or fusion. Used as a concentrated iron ore substitute for scrap in EAFs.

Butt-Welded Pipe/Tube. A continuous strip of hot-rolled skelp that is heated, formed into a circular shape, and then welded to form the pipe or tube.

By-Product Recovery Coke Battery. A coke-producing unit comprising numerous adjoining, refractory-lined, slot-type ovens; coal charging and coke pushing facilities; coke quench stations; and coke oven gas collecting mains.

By-Product Recovery Cokemaking. Process in which coal is distilled at high temperatures in the absence of air to produce coke and recover the volatile compounds as by-products (e.g., crude coal tar, crude light oil).

CAA. Clean Air Act (42 U.S.C. 7401 *et seq.*, as amended *inter alia* by the Clean Air Act Amendments of 1990 (Pub. L. 101-549, 104 stat. 2394)).

Carbon Steel. Steel that owes its properties chiefly to various percentages of carbon without substantial amounts of other alloying elements. Steel is classified as carbon steel when no minimum content of elements other than carbon is specified or required to obtain a desired alloying effect and when the maximum content for any of the following do not exceed the percentage noted: manganese, 1.65 percent; silicon, 0.60 percent; copper, 0.60 percent.

Cast Iron. The metallic product obtained by reducing iron ore with carbon at a temperature sufficiently high to render the metal fluid and casting it in a mold.

Casting. (1) A term applied to the act of pouring molten metal into a mold. (2) The metal object produced by such pouring.

Categorical Pretreatment Standards. Standards for discharges of pollutants to POTWs promulgated by EPA, in accordance with Section 307 of the Clean Water Act, that apply to specific process wastewater discharges from particular industrial categories (40 CFR 403.6 and 40 CFR 405 - 471).

CBI. Confidential Business Information.

CFR. Code of Federal Regulations, published by the U.S. Government Printing Office. A codification of the general and permanent rules published in the Federal Register by the executive departments and agencies of the federal government.

Channels. A common steel shape consisting of two parallel flanges at right angles to the web. It is produced both in bar sizes (less than 3 inches) and in structural sizes (3 inches and over).

Clarifier. A wastewater treatment unit, usually a circular, cone-bottom steel or concrete tank with a center stilling well and mechanical equipment at the bottom for settling and subsequent removal of suspended solids from the wastewater stream. Clarifiers may also be equipped with surface skimming devices to remove floating materials and oil.

Classifier. Mechanical device used to remove heavy or coarse particulate matter from a wastewater stream.

Coating. The process of covering steel with another material, primarily for corrosion resistance.

COD. Chemical oxygen demand. A nonconventional, bulk parameter that measures the oxygen-consuming capacity of refractory organic and inorganic matter present in water or wastewater. COD is expressed as the amount of oxygen consumed from a chemical oxidant in a specific test (see Method 410.1).

Coil. Steel sheet that is wound, usually rolled in a hot-strip mill. Coils are typically more than one-quarter mile long; coils are the most efficient way to store and transport sheet steel.

Coke. The carbon product resulting from the high-temperature distillation of metallurgical coals in by-product recovery or non-recovery coke ovens.

Coke Breeze. Undersized coke particles (also referred to as coke fines) recovered from coke screening operations and coke quenching stations. Coke breeze may be used as fuel in sintering operations or may be sold as a by-product.

Coke Oven Gas. Hot gas released in the coke ovens, containing water vapor, hydrogen, methane, nitrogen, carbon monoxide, carbon dioxide, and hydrocarbons. Also contains contaminants that may be recovered as by-products: tar vapors; light oil vapors (aromatics), consisting mainly of benzene, toluene and xylene; naphthalene vapor; ammonia gas; hydrogen sulfide gas; and hydrogen cyanide gas.

Coke Pushing. The transfer of hot coke from coke ovens into quench cars, using pusher-side equipment such as a door remover and pusher.

Coke Quenching. Rapid cooling of hot coke using water.

Cold Forming. A forming operation in which the shape of the metal piece is changed by plastic deformation at a temperature below that at which recrystallization occurs. The plastic deformation can be effected by forging, rolling, extrusion, or drawing.

Cold Rolled Products. Flat-rolled products that have been finished by rolling the piece without heating (at approximately ambient temperature).

Continuous Casting. The process of casting liquid steel directly into semi-finished shapes such as slabs, billets, and rounds, thus eliminating ingot casting and associated ingot stripping, reheating, and primary rolling operations.

Contract Haul. Collection of wastewater or sludge by a private disposal service, scavenger, or purveyor in containers for subsequent transportation, treatment, and disposal off site.

Control Authority. The term "control authority" as used in section 403.12 refers to: (1) The POTW if the POTW's submission for its pretreatment program (§403.3(t)(1)) has been approved in accordance with the requirements of §403.11; or (2) the approval authority if the submission has not been approved.

Control Water. Dilution water added to control toxicity prior to biological treatment systems.

Conventional Pollutants. The pollutants identified in section 304(a)(4) of the Clean Water Act and the regulations thereunder (i.e., biochemical oxygen demand (BOD_5), total suspended solids (TSS), oil and grease, fecal coliform, and pH).

CWA. Clean Water Act. The Federal Water Pollution Control Act Amendments of 1972 (33 U.S.C. 1251 *et seq.*), as amended, *inter alia*, by the Clean Water Act of 1977 (Public Law 95-217) and the Water Quality Act of 1987 (Public Law 100-4).

Cyanide, Free, Fixed, and Total. Free cyanide is cyanide present in a form that is amenable to chlorination, while fixed cyanide is present in a form that is not amenable to cyanide (e.g., cyanide complexes). EPA uses the term cyanide to mean total cyanide, which includes both the free and fixed forms of cyanide.

Deep-Well Injection. Long-term or permanent disposal of untreated, partially treated, or treated wastewaters by pumping the wastewater into underground formations through a bored, drilled, or driven well.

Dephenolization. A coke plant by-product recovery process in which phenol is removed from ammonia liquor and is recovered as sodium phenolate by liquid extraction and vapor recirculation.

Descaling. The process of removing scale from the surface of steel. The most common method of descaling is to crack the scale using roughened rolls and a forceful water spray (see also electrolytic and salt bath descaling).

Desulfurization. Processes to remove sulfur compounds from coke oven gases and molten iron. Coke oven gas desulfurization usually involves scrubbing the sulfur-rich gas stream with an absorbent solution, with subsequent recovery of elemental sulfur from the solution. Hot metal (molten iron) desulfurization involves treating the molten metal with lime, with subsequent collection of sulfur-rich particulate matter in fabric filter emission control devices (baghouses).

Dioxin/furans. Chlorinated dibenzo-*p*-dioxins (CDDs) and chlorinated dibenzofurans (CDFs) are closely related families of highly toxic and persistent organic chemicals formed as unwanted by-products in some commercially significant chemical reactions, during high-temperature decomposition and combustion of certain chlorinated organic chemicals, during combustion of natural materials, and through other reactions involving chlorine and organic materials. There are 210 CDD/CDF compounds (or congeners) with four to eight chlorine substitutions. Seventeen CDD/CDF congeners chlorinated at the 2,3,7,&8 lateral positions are among the most biologically active and toxic CDDs/CDFs. 2,3,7,8-Tetrachlorodibenzo-*p*-dioxin (2,3,7,8-TCDD) is the most toxic of the CDDs/CDFs. The relative toxicity of mixtures of CDDs/CDFs is described through use of International Toxicity Equivalence Factors (I-TEFs/89).

Direct Application (Once-Through). In cold rolling, the use of water, detergent, rolling oil, or other substance to remove loose organic compounds and fines, in which the substance is not recirculated.

Direct Discharger. An industrial discharger that introduces wastewater to a water of the United States with or without treatment by the discharger.

Direct-Reduced Iron (DRI). Relatively pure iron produced by reduction of iron ore (pellets or briquettes) below the melting point using gaseous (carbon monoxide-carbon dioxide, hydrogen) or solid reactants. DRI is used as a substitute for scrap steel in EAFs to minimize contaminant levels in the melted steel and to allow economic steel production when market prices for scrap are high.

DL. Sample-specific detection limit.

Drawing. A forming operation in which metal is deformed by pulling the material through a die by applying a tensile force applied on the exit side.

Dry Air Pollution Control Equipment. Control equipment in which gases are cleaned without the use of water.

DSCFM. Dry standard cubic feet per minute. A standard unit for measuring gas flow.

EAD. EPA's Engineering and Analysis Division.

Effluent Limitations Guidelines and Standards. Regulations promulgated by the U.S. EPA under authority of Sections 301, 304, 306 and 307 of the Clean Water Act that set out minimum, national technology-based standards of performance for point source wastewater discharges from specific industrial categories (e.g., iron and steel manufacturing plants). Effluent limitations guidelines and standards regulations are implemented through the NPDES permit and national pretreatment programs and include the following:

- Best Practicable Control Technology Currently Available (BPT)
- Best Available Technology Economically Achievable (BAT)
- Best Conventional Pollutant Control Technology (BCT)
- New Source Performance Standards (NSPS)
- Pretreatment Standards for Existing Sources (PSES)
- Pretreatment Standards for New Sources (PSNS)

The pretreatment standards (PSES, PSNS) are applicable to industrial facilities with process wastewater discharges to publicly owned treatment works (POTWs). The effluent limitations guidelines and new source performance standards (BPT, BAT, BCT and NSPS) are applicable to industrial facilities with direct discharges of process wastewaters to waters of the United States.

Electric Arc Furnace (EAF). A furnace in which steel scrap and other ferrous and nonferrous materials are melted using electrical and chemical energy and converted into liquid steel.

Electric-Resistance-Welded Pipe/Tube. Pipe or tube formed from a plate or continuous strip of steel that is formed into a circular shape and welded together using pressure and electrical energy. Heat is generated by the resistance to current flow (either transformed or induced) across the seam during welding.

Electrolytic Descaling. The aggressive physical and chemical removal of heavy scale from semi-finished specialty and high-alloy steels using electrolytic sodium sulfate solutions.

Electroplating. Operations including metal coating onto precleaned steel using an electric current. Common metal coating types include chromium and tin. Electroplating improves resistance to corrosion and, for some products, improves appearance and paintability.

Electroslag Remelting (ESR). A specialty steel-refining process used to produce ingots with stringent composition requirements. In the process, one or more steel electrodes of about the desired chemical composition are drip-melted through molten slag into a water-cooled copper mold at atmospheric pressure.

Electrostatic Precipitator (ESP). An air pollution control device that imparts an electrical charge on solid particles in the gas stream, which are then attracted to an oppositely charged collector plate. The collector plates are intermittently rapped to discharge the collected dust to a hopper below.

End-of-Pipe (EOP) Treatment. Refers to those processes that treat a facility waste stream for pollutant removal prior to discharge.

EPA. The U.S. Environmental Protection Agency (also referred to as "the Agency").

Extrusion. A forming operation in which a material is forced, by compression, through a die orifice.

Filtration. The passage of fluid through a porous medium to remove matter held in suspension.

Final Gas Cooler. A packed tower used for cooling coke oven gas by direct contact with water. The gas is generally cooled to approximately 30°C (86°F) for recovery of light oil.

Finishing. Term used to generically describe steel processing operations conducted after hot forming (e.g., acid pickling, scale removal, cold forming, annealing, alkaline cleaning, hot coating, and electroplating).

Flat Products. Hot-rolled steel products including plate, strip, and sheet, that may or may not be further finished (e.g., cold-rolled or acid pickled).

Flume Flushing. Process by which mill scale collected under hot forming mills and runout tables of continuous casters is transported with water to scale pits for subsequent recovery.

Flushing Liquor. See ammonia liquor.

Flux. Material added to a blast furnace or steelmaking furnace for the purpose of removing impurities from the molten metal.

Forging. Hot-working of heated steel shapes (i.e., ingots, blooms, billets, slabs) by hammering or hydraulic presses.

Forming. Operations in which the shape of a metal piece is changed by plastic deformation (e.g., forging, rolling, extrusion, and drawing).

Foundry Coke. Coke produced for foundry operations.

Four-High Mill. A stand which has four rolls, one above the other. This kind of mill has two working rolls, each of which is stiffened by a larger back-roll. Four high rolls are used only on mills which roll flat products.

FR. Federal Register, published by the U.S. Government Printing Office. A publication making available to the public regulations and legal notices issued by federal agencies.

Free Leg. That section of an ammonia still from which ammonia, hydrogen sulfide, carbon dioxide, and hydrogen cyanide are steam distilled and returned to the gas stream without the addition of an alkaline substance to release free ammonia.

Fugitive Emissions. Emissions that are expelled to the atmosphere in an uncontrolled manner.

Fume Scrubbers. See Wet Scrubbers.

Fundamentally Different Factors Variance, CWA Section 301(n). The Administrator, with the concurrence of the State, may establish an alternative requirement under Section 301(b)(2) or Section 307(b) of the Clean Water Act for a facility that modifies the requirements of national effluent limitation guidelines or categorical pretreatment standards that would otherwise be applicable to such facility, if the owner or operator of such facility demonstrates to the satisfaction of the Administrator that the facility is fundamentally different with respect to the factors (other than cost) specified in Sections 304(b) or 304(g) and considered by the Administrator in establishing such national effluent limitation guidelines or categorical pretreatment standards.

Furnace Burden. The solid materials charged to a blast furnace comprising coke, iron ore and pellets, sinter, and limestone.

Furnace Coke. Coke produced for blast furnace operations.

Galvanizing. Application of zinc to the surface of steel primarily for corrosion protection. Zinc may be applied by passing precleaned steel through a molten zinc bath (hot dip galvanizing) or electrochemically (electrogalvanizing).

Ground Water. Water in a saturated zone or stratum beneath the surface of land or water.

Hardness. Defined in terms of the method of measurement. (1) Usually, the resistance to dentation. (2) Stiffness or temper of wrought products. (3) Machinability characteristics.

Hazardous Waste. Any material that meets the Resource Conservation and Recovery Act definition of "hazardous waste" contained in 40 CFR Part 261.

Hearth. In a reverberatory furnace, the portion that holds the molten metal or bath.

Heat. Quantity of steel manufactured per batch in a BOF or an EAF.

Hexane Extractable Material (HEM). A method-defined parameter (EPA Method 1664) that measures the presence of relatively nonvolatile hydrocarbons, vegetable oils, animal fats, waxes, soaps, greases, and related material that are extractable in the solvent n-hexane. This parameter does not include materials that volatilize at temperatures below 85°C. EPA uses the term "HEM" synonymously with the conventional pollutant oil and grease (O&G).

Hot Blast. Preheated air blown into the blast furnace through a bustle pipe and numerous tuyeres located around the circumference of the furnace. Temperatures range from 550°C to 1,000°C, and pressures range from 2 to 45 atmospheres.

Hot Coating (Hot Dip Coating). Operations in which precleaned steel is immersed into baths of molten metal. Common metal types include: tin, zinc (galvanizing), combinations of lead and tin (terne coating), and combinations of aluminum and zinc (galvalume® coating). Hot coating is typically used to improve resistance to corrosion, and for some products, to improve appearance and paintability.

Hot Forming. Also known as hot working; a forming operation in which the shape of the metal piece is changed by plastic deformation at a temperature above that at which recrystallization occurs. The plastic deformation can be effected by rolling, extrusion, or drawing.

ICR. Information Collection Request.

Incineration. A controlled combustion process most commonly used to destroy solid, liquid, or gaseous wastes.

Indirect Discharger. An industrial discharger that introduces wastewater into a POTW.

Ingot. A large block-shaped steel casting. Ingots are intermediates from which other steel products are made. When continuous casters are not used, an ingot is usually the first solid form the steel takes after it is made in a furnace.

Ingot Mold. Cast iron molds into which molten steel is teemed. After cooling, the mold is stripped from the solidified steel, which is then reheated in soaking pits (gas or oil-fired furnaces) prior to primary rolling into slabs or billets. Molds may be circular, square, or rectangular, with

walls of various thickness. Some molds are of larger cross-section at the bottom, whereas others are larger at the top.

Integrated Steel Mill. A mill that makes steel by processing iron ore and other raw materials in blast furnaces and BOFs, rather than EAFs as at non-integrated or mini-mills.

Iron. Primarily the name of a metallic element. In the steel industry, iron is the name of the product of a blast furnace containing 92 to 94 percent iron, the product made by the reduction of iron ore. Iron in the steel mill sense is impure and contains up to 4 percent dissolved carbon along with other impurities.

Iron and Steel Coke Plant. By-product cokemaking operations that provide more than 50 percent of the coke produced to ironmaking blast furnaces associated with steel production.

Iron Ore. The raw material from which iron is made. It is primarily iron oxide with impurities such as silica.

Ironmaking. The production of iron through the reduction of iron ore. In the United States, iron is made in blast furnaces.

Ladle. A large vessel into which molten metal or molten slag is received and handled.

Ladle Metallurgy. A secondary step in the steelmaking process usually performed in a ladle after the initial refining process in a steelmaking furnace (i.e., BOF, EAF) is complete. Ladle metallurgy is conducted for one or more of the following purposes: to control gases in the steel; to remove, add, or adjust concentrations of metallic or nonmetallic compounds (alloying); and to adjust physical properties (e.g., temperature).

Landfill Leachate. Water or ground water collected from that portion of a solid or hazardous waste landfill containing disposed of solid or hazardous wastes.

Larry Car. A movable device located on top of a coke battery for receiving and charging screened coal to coke ovens through charging holes located at the top of the ovens.

Light Oil. An unrefined, clear, yellow-brown oil with an approximate specific gravity of 0.889 produced as a by-product of by-product cokemaking operations. It contains varying amounts of coal-gas products with boiling points ranging from about 40°C to 200°C and from which benzene, toluene, xylene, and solvent naphthas are recovered.

Lime. Calcium oxide (CaO), produced by burning limestone (principally composed of calcium carbonate ($CaCO_3$)) in a lime kiln. Lime is used as a flux (slagging agent) in BOF and EAF steelmaking; limestone is used as a flux in blast furnaces for production of molten iron.

LTA. Long-term average. For purposes of the pretreatment standards, average pollutant levels achieved over a period of time by a facility, subcategory, or technology option.

Merchant Coke Plant. By-product cokemaking operations other than those at iron and steel coke plants.

µg/L. Micrograms/liter.

mg/L. Milligrams/liter.

Mill Scale. The iron oxide scale that breaks off of heated steel as it passes through a rolling mill. The outside of the piece of steel is generally completely coated with scale as a result of being heated in an oxidizing atmosphere.

Mini-Mill. See Non-Integrated Steel Mill.

Minimum Level (ML). The level at which an analytical system gives recognizable signals and an acceptable calibration point.

Mixed-Media Filtration. A filtration technology which uses a bed of granular particles to remove small concentrations of entrained solids from iron and steel wastewaters. The bed is comprised of either particles of varying size or different types of media (e.g., sand, gravel, anthracite). (Also referred to as multimedia filtration.)

Mold. A form or cavity into which molten metal is poured to produce a desired shape. See ingot molds.

Multimedia Filtration. A filtration technology which uses a bed of granular particles to remove small concentrations of entrained solids from iron and steel wastewaters. The bed is comprised of either particles of varying size or different types of media (e.g., sand, gravel, anthracite). (Also referred to as mixed-media filtration.)

Multiple Stand (Multi Stand). A type of cold rolling stand that has greater than one roll, one above the other, used on flat products.

NAICS. The North American Industry Classification System, a system for classifying business establishments adopted in 1997 to replace the old Standard Industrial Classification (SIC) system. NAICS is the industry classification system used by the statistical agencies of the United States.

Naphthas. Any of several inflammable, volatile liquids produced by the distillation of coal, coal tar, wood, petroleum, and other carbonaceous materials.

NESHAPs. The National Emission Standards for Hazardous Air Pollutants (NESHAPs) regulations set out at 40 CFR 61, Subpart J (6/6/89), Subpart L (9/14/89), Subpart BB (3/7/90), and Subpart FF (3/7/90).

Nitrification. The oxidation of ammonium salts to nitrites (via Nitrosomas bacteria) and the further oxidation of nitrite to nitrate via Nitrobacter bacteria. Nitrification can be accomplished in either (1) a single or two-stage activated sludge wastewater treatment system or (2) wetlands specifically developed with a march/pond configuration and maintained for the express purpose of removing ammonia-N. Indicators of nitrification capability are: (1) biological monitoring for ammonia oxidizing bacteria (AOB) and nitrite oxidizing bacteria (NOB) to determine if the nitrification is occurring; and (2) analysis of the nitrogen balance to determine if nitrifying bacteria reduce the amount of ammonia and increase the amount of nitrite and nitrate.

Noncontact Cooling Water. Water used for cooling in-process and non-process applications that does not come into contact with any raw material, intermediate product, by-product, waste product (including air emissions), or finished product.

Nonconventional Pollutants. Pollutants other than those defined specifically as conventional pollutants (identified in section 304(a) of the Clean Water Act) or priority pollutants (identified in 40 CFR Part 423, Appendix A).

Nondetect Value (ND). Samples below the level that can be reliable measured by an analytical method. This is also known, in statistical terms, as left-censored (i.e., value having an upper bound at the sample-specific detection limit and a lower bound at zero).

Non-Integrated Steel Mill (Mini-Mill). Steel mills that melt scrap metal in an EAF to produce commodity products.

Non-Process Wastewater. Wastewaters generated by non-process operations such as utility wastewaters (water treatment residuals, boiler blowdown, air pollution control wastewaters from heat recovery equipment, and water generated from co-generation facilities), treated or untreated wastewaters from ground water remediation systems, dewatering water for building foundations, and other wastewater streams not associated with production processes.

Non-Recovery Cokemaking. Production of coke from coal in which volatile components derived from the coal are consumed in the process and by-products are not recovered.

NPDES Program. The National Pollutant Discharge Elimination System (NPDES) program authorized by Sections 307, 318, 402, and 405 of the Clean Water Act that applies to facilities that discharge wastewater directly to U. S. surface waters.

NRDC. Natural Resources Defense Council.

NSPS. New source performance standards, under section 306 of the Clean Water Act. See also Effluent Limitations Guidelines and Standards.

Oil and Grease (O&G). A method-defined parameter (EPA Method 413.1) that measures the presence of relatively nonvolatile hydrocarbons, vegetable oils, animal fats, (EPA nitrous 413.1) waxes, soaps, greases, and related materials that are extractable in Freon 113 (1,1,2-trichloro-

1,2,2-trifluoroethane). This parameter does not include materials that volatilize at temperatures below 75°C. Oil and grease is a conventional pollutant as defined in section 304(a)(4) of the Clean Water Act and in 40 CFR Part 401.16. Oil and grease is also measured by the hexane extractable material (HEM) method (see Method 1664, promulgated at 64 FR 26315; May 14, 1999). The analytical method for TPH and oil and grease has been revised to allow for the use of normal hexane in place of Freon 113, a chlorofluorocarbon (CFC). Method 1664 (Hexane Extractable Material) replaces the current oil and grease Method 413.1 found in 40 CFR 136.

Oil Skimmer. A device that skims the top surface of wastewater to remove floating oil.

Open Hearth Furnace. A furnace for melting metal, in which the bath is heated by the convection of hot gases over the surface of the metal and by radiation from the roof.

Oxidization. A chemical treatment that increases the positive valences of a substance. In a limited sense, adding oxygen to a substance, as in oxidizing C to CO, CO to CO_2, Si to SiO_2, Mn to MnO.

Pig Iron. Iron cast into the form of small blocks that weigh about 30 kilograms each. The blocks are called pigs.

Pipe. A hollow, cylindrical product distinguished from tube by heavier wall thickness. Pipe is usually measured by its inside diameter. Tube is generally measured by outside diameter.

Plant Service Water. City, well, or surface water that has not been used elsewhere on site (i.e., water prior to its use in a process or operation).

Plate. A flat-rolled finished steel product within the following size and/or weight limitations:

Width	Thickness
Over 48 inches wide	0.180 inches or thicker
Between 8 and 48 inches inclusive	0.230 inches or thicker
Over 48 inches wide	7.53 lb/sq ft or heavier
Between 8 and 48 inches inclusive	9.62 lb/sq ft or heavier

POC. Pollutant of concern.

Pollutant Loading. The quantity of a pollutant in the wastestream, in pounds per year.

Pollution Prevention. The use of materials, processes, or practices that reduce or eliminate the creation of pollutants or wastes. It includes practices that reduce the use of hazardous and nonhazardous materials, energy, water, or other resources, as well as those practices that protect natural resources through conservation or more efficient use. Pollution prevention consists of source reduction, in-process recycle and reuse, and water conservation practices.

Polychlorinated Biphenyl (PCB) Compounds. Any of a family of halogenated aromatic hydrocarbons that were produced and marketed in the United States as a series of complex mixtures under the trade name Aroclor; any specific chemical included within the following Chemical Abstracts Service Registry Numbers: 1336-36-3 (total PCBs), 12674-11-2 (Aroclor 1016), 11104-28-2 (Aroclor 1221), 11141-16-5 (Aroclor 1232), 53469-21-9 (Aroclor 1242), 12672-29-6 (Aroclor 1254), or 11096-82-5 (Aroclor 1260), see 40 CFR 302; or, any of 209 synthetic congeners of biphenyl with 1 to 10 chlorine substitutions.

Potable Water. Water that can be consumed; drinking water.

Priority Pollutants. The 126 toxic pollutants listed in 40 CFR Part 423, Appendix A.

Privately Owned Treatment Works (PrOTW). Any device or system owned and operated by a private entity and used to store, treat, recycle, or reclaim liquid industrial wastes.

Process Wastewater. Any wastewaters that come into direct contact with the process, product, by-products, or raw materials for the manufacturing of iron and steel. Process wastewaters also include wastewater from slag quenching, equipment cleaning, air pollution control devices, rinse water, and contaminated cooling water. Sanitary wastewater and storm water are not considered process wastewaters. Non-contact cooling wastewaters are cooling waters that do not directly contact the processes, products, by-products, or raw materials; these wastewaters are not considered process wastewaters.

PSES. Pretreatment standards for existing sources of indirect discharges, under section 307(b) of the Clean Water Act. See also Effluent Limitations Guidelines and Standards.

PSNS. Pretreatment standards for new sources of indirect discharges, under sections 307(b) and (c) of the Clean Water Act. See also Effluent Limitations Guidelines and Standards.

Publicly Owned Treatment Works (POTW). Any device or system owned and operated by a public entity and used in the storage, treatment, recycling, or reclamation of liquid municipal sewage and/or liquid industrial wastes. The sewerage system that conveys wastewaters to treatment works is considered part of the POTW.

QA/QC. Quality Assurance/Quality Control.

Quenching. A process of rapid cooling from an elevated temperature by contact with liquids, gases, or solids.

Recirculation. In cold rolling, use and recirculation of water, detergent, rolling oil, or other substance to remove loose organic compounds and fines.

Reduction. A chemical treatment that decreases the positive valences of a substance. In a limited sense, removing oxygen from a substance (e.g., reducing CO to C, CO_2 to CO, SiO_2 to Si, MnO to Mn).

Refining. Oxidation cycle for transforming hot metal (iron) and other metallics into steel by removing elements present, such as silicon, phosphorus, manganese, and carbon.

Reheat Furnace. A gas-fired, refractory-lined furnace used to heat steel shapes for subsequent hot forming operations.

Rod. A hot-rolled steel section, usually round in cross-section, produced as a final product or as an intermediate product for subsequent production of wire and wire products.

Rolling. A forming operation that reduces the thickness of a metal piece by passing it between two or more rolls.

Roughing Stand. The rolls used to break down the ingot, billet, or slab in the preliminary rolling of metal products.

Runout Table. Area of a hot strip mill located after the finishing stands and before the coilers where laminar-flow cooling is applied to the strip. Generally, for any hot forming mill, this area of the mill is downstream of the last stand of work rolls. For continuous casters, this area of the process is after the torch cut-off.

Salt Bath Descaling. The aggressive physical and chemical removal of heavy scale from semi-finished specialty and high-alloy steels with molten salt baths or solutions containing neutral or acidic salts.

Scale. Iron oxides that form on the surface of hot steel when the steel is exposed to an oxidizing atmosphere.

Scale Pit. An in-ground rectangular (and in some instances, circular) basin constructed of concrete to recover scale from process wastewaters used in hot forming and continuous casting operations. Collected scale is mechanically removed and recovered for recycle to a sinter plant or for sale as a by-product.

Scarfing. Removal of imperfections on the surface of semi-finished steel shapes using oxygen/acetylene torches.

Scrap. Iron or steel discard, cuttings, or junk metal, that can be reprocessed.

Seamless Pipe/Tube. Tubular product produced by piercing (a hot forming process), which is followed by further processing to achieve correct wall and size dimensions, or by extrusion for small diameter products.

Secondary Steelmaking. The practice of redistributing steel that does not meet the original customer's specifications because of a defect in its chemistry, gauge, or surface quality. Some steel users may accept lower quality, off-spec steel, usually at a lower price.

Section 301(g) Variance. The Administrator, with the concurrence of the State, may modify the requirements of Section 301(b)(2)(A) of the Clean Water Act with respect to the discharge from any point source of ammonia, chlorine, color, iron, and total phenols (4AAP) (when determined by the Administrator to be a pollutant covered by Section 301(b)(2)(F)) and any other pollutant which the Administrator lists under 301(g)(4). In the iron and steel industry, variances under Section 301(g) have been granted for discharges of ammonia-N and phenols (4AAP) from cokemaking and ironmaking operations. The variances granted under Section 301(g) must meet certain conditions (e.g., the alternative discharges from BAT must meet local water quality standards, cannot be less stringent than BPT, must not result in more stringent controls on other dischargers, and must satisfy other environmental and human health concerns).

Semi-Finished Shapes. Steel in the form of ingots, blooms, billets, or slabs that are forge or rolled into a finished product.

Semi-Wet Air Pollution Control Equipment. A gas cleaning system in which furnace off-gases are conditioned with moisture prior to processing in electrostatic precipitators or baghouses.

Sendzimir Mill. Type of cold rolling mill used to finish hot-rolled strip to a specific width, thickness, and hardness.

Shear. In a steel mill, a machine that cuts steel products. Steel shears may be classified by: type of drive (hydraulic and electric); type of work performed (cropping, squaring, slab, bloom, billet, bar shears); type of mechanism (rotary, rocking, gate, guillotine, alligator shears); and movement of work while shearing (flying shears).

Sheet. Steel produced in coils or in cut lengths within the following size limitations:

Width	Thickness
Between 12 and 48 inches inclusive	0.1800 to 0.2299 inch
Over 12 inches	0.0449 to 0.1799 inch

SIC. Standard Industrial Classification, a numerical categorization scheme used by the U.S. Department of Commerce to denote segments of industry. The SIC system was replaced in 1997 by the NAICS.

Silica Gel Treated Hexane Extractable Material (SGT-HEM). The freon-free oil and grease method (EPA Method 1664) used to measure the portion of oil and grease that is similar to total petroleum hydrocarbons. (Also referred to as nonpolar material (NPM)).

Single Stand. A type of cold rolling stand which has only one roll, used on flat products.

Sinter. In blast furnace usage, lumpy material that has been prepared from flue dust, other iron-bearing materials, lime, and coke breeze. The dust is agglomerated by heating it to a high temperature. Sinter contains valuable amounts of combined iron.

Sintering. The process of burning a fuel (e.g., coke fines, coke breeze) with limestone fines and a variety of fine iron-bearing materials including iron ore screenings, blast furnace gas cleaning wastewater sludges, and mill scale to form an agglomerated product suitable to charge to a blast furnace. The product is a clinker-like aggregate referred to as sinter or clinker.

Site. Generally one contiguous physical location at which manufacturing operations related to the iron and steel industry occur. This includes, but is not limited to, cokemaking, ironmaking, steelmaking, rolling, and finishing. In some instances, a site may include properties located within separate fence lines, but located close to each other.

Skelp. Flat, hot-rolled steel strip or sheet used to manufacture welded pipe or tube products.

Slab. A semifinished block of steel formed from a rolled ingot or manufactured on a continuous slab casting machine, with its width at least twice its thickness.

Slag. Vitrified mineral by-product produced in the reduction of metals from their ores. The principal components of blast furnace slag are oxides of silica and alumina originating chiefly with the iron-bearing materials and lime and magnesia originating with the flux. The major components of steelmaking slags are calcium silicates, lime-iron compounds, and lesser amounts of free lime and magnesia. Usually, slags consist of combinations of acid oxides with basic oxides; neutral oxides are added to aid fusibility.

Sludge Dewatering. The mechanical or natural processes to remove free water from wastewater sludges. Mechanical equipment used for sludge dewatering may include rotary or leaf vacuum filters, filter presses, or belt filters. Wastewater sludges may be dewatered naturally in sludge drying beds.

Specialty Steel. Steel products containing alloying elements that are added to enhance the properties of the steel product when individual alloying elements (e.g., aluminum, chromium, cobalt, columbium, molybdenum, nickel, titanium, tungsten, vanadium, zirconium) exceed 3 percent or the total of all alloying elements exceeds 5 percent.

Stainless Steel. A trade name given to alloy steel that is corrosion and heat resistant. The chief alloying elements are chromium, nickel, and silicon in various combinations with possible small percentages of titanium, vanadium, and other elements. By American Iron and Steel Institute (AISI) definition, a steel is called "stainless" when it contains 10 percent or more chromium.

Staves. Cast iron or copper elements containing flow channels for cooling water that are installed within the steel jacket of the bosh.

Steel. A hard, tough metal composed of iron alloyed with carbon and other elements to enhance hardness and resistance to rusting.

Strand. A continuous casting mold and its associated mechanical equipment. Also, a term applied to the traveling grate of the sintering machine.

Strip. Steel produced in coils or in cut lengths within the following size limitations:

Width	Thickness
Up to 3-1/2 inches inclusive	0.0255 to 0.2030 inch inclusive
Between 3-1/2 and 6 inches inclusive	0.0344 to 0.2030 inch inclusive
Between 6 and 12 inches inclusive	0.0449 to 0.2299 inch inclusive

Surface Water. Waters of the United States as defined at 40 CFR 122.2.

Tandem Mill. A mill with a number of stands in succession; generally a cold rolling mill.

Tapping. Process of opening a taphole in a blast furnace to remove hot metal and slag; process of pouring molten steel from a steelmaking furnace into a receiving ladle to transfer to a ladle metallurgy station or continuous caster, or into a teeming ladle to pour into ingot molds.

Tar. Black, viscous organic matter removed from coke oven gas in recirculating flushing liquor systems in the gas collector mains located on top of the by-product recovery coke battery. Tar is subsequently recovered in a tar or flushing liquor decanter where most of the tar is separated from recirculating flushing liquor by gravity.

Technical Development Document (TDD). Development Document for the Proposed Effluent Limitations Guidelines and Standards for the Iron and Steel Point Source Category.

Teeming. Pouring or casting of molten steel from a ladle into cast iron ingot molds of various dimensions to cool and solidify the steel.

Temper Mill. Relatively light cold rolling process (< 1 percent thickness reduction) performed to improve flatness, alter the mechanical properties of the steel, and minimize surface disturbances. Temper mills are usually single-stand mills.

Total Organic Carbon (TOC). A nonconventional bulk parameter that measures the total organic content of wastewater (EPA Method 415.1). Unlike five-day biochemical oxygen demand (BOD_5) or chemical oxygen demand (COD), TOC is independent of the oxidation state of the organic matter and does not measure other organically bound elements, such as nitrogen and hydrogen, and inorganics that can contribute to the oxygen demand measured by BOD_5 and COD. TOC methods utilize heat and oxygen, ultraviolet irradiation, chemical oxidants, or combinations of these oxidants to convert organic carbon to carbon dioxide (CO_2). The CO_2 is then measured by various methods.

Total Petroleum Hydrocarbons (TPH). - A method-defined parameter that measures the presence of mineral oils that are extractable in Freon 113 (1,1,2-trichloro-1,2,2-trifluoroethane) and not absorbed by silica gel. The analytical method for TPH and oil and grease has been revised to allow the use of normal hexane in place of Freon 113, a chlorofluorocarbon (CFC). Method 1664 (Hexane Extractable Material) replaces the current oil and grease Method 413.1 found in 40 CFR 136. (Also referred to as nonpolar material (NPM).)

Traveling Grate. Part of a sinter machine or other agglomeration process consisting of zones for drying, preheating, combustion, and cooling.

TRC. Total Residual Chlorine.

TSS. Total Suspended Solids.

Tube. A hollow, cylindrical product distinguished from pipe by thinner wall thickness. Tube is usually measured by its outside diameter. Pipe is generally measured by inside diameter.

Tundish. A refractory-lined vessel located between the ladle and the continuous caster. Molten steel is tapped from the ladle to the tundish to provide a stable flow of metal into the caster.

Tuyeres. Water-cooled openings located around the circumference of a blast furnace at the top of the hearth through which the hot blast enters the furnace.

Utility Operations. The ancillary operations at a steel mill necessary for mill operations, but not part of a production process (e.g., steam production in a boiler house, power generation, boiler water treatment, intake water treatment).

Vacuum Degassing. A process to remove dissolved gases from liquid steel by subjecting it to a vacuum.

Vacuum Ladle Degassing. A variation of vacuum degassing that includes induction stirring and vacuum-oxygen decarburization.

Variability Factor (VF). A variability factor is used in calculating a limitation to allow for reasonable, normal variation in pollutant concentrations when processed through well-designed and operated treatment systems. Variability factors account for normal fluctuations in treatment. By accounting for these reasonable excursions about the long-term average, EPA's use of variability factors results in limitations that are generally well above the actual long-term average.

Venturi Scrubber. A wet air pollution control device that operates by causing intermixing of particulates in a gas stream and water applied to the scrubber. The intermixing is accomplished by rapid contraction and expansion of the gas stream and a high degree of turbulence in the throat of the scrubber.

Volatile Organic Compound (VOC). A measure of volatile organic constituents performed by isotope dilution gas chromatography/mass spectrometry (GC/MS), EPA Method 1624. The isotope dilution technique uses stable, isotopically labeled analogs of the compounds of interest as internal standards in the analysis.

Wastewater. See Process Wastewater.

Wastewater Treatment. The processing of wastewater by physical, chemical, biological, or other means to remove specific pollutants from the wastewater stream or to alter the physical or chemical state of specific pollutants in the wastewater stream. Wastewater is treated so it can be discharged, recycled to the same process that generated the wastewater, or reused in another process.

Water Bubble. Section 420.03, Alternative Effluent Limitations Under the "Water Bubble" (commonly known as the "water bubble" rule) provides a regulatory flexibility mechanism to allow trading of identical pollutants at any single steel facility with multiple compliance points. See §420.03 and Section 17.6 for the specific provisions and restrictions of the water bubble.

Wet Air Pollution Control Equipment. Venturi, orifice plate, or other units used to bring water into intimate contact with contaminated gas to remove contaminants from the gas stream.

Wet Precipitator. An air pollution control device that uses a spray water wash to cleanse the fume residue that is collected dry on precipitator plates. Two types of wet precipitators can be used: intermittent (on a timed cycle) or continuous.

Wet Scrubbers. Venturi or orifice plate units used to bring water into contact with the dirty gas stream to remove pollutants.

Wet-Open Combustion Gas Cleaning System. A BOF gas cleaning system in which excess air is admitted to the off-gas collection system, allowing carbon monoxide to combust prior to high-energy wet scrubbing for air pollution control.

Wet-Suppressed Combustion Gas Cleaning System. A BOF gas cleaning system in which a limited amount of excess air is admitted to the off-gas collection system prior to high-energy wet scrubbing for air pollution control, thus minimizing combustion of carbon monoxide and the volume of gas requiring subsequent treatment.

Windbox. Sintering machine device to draw air through the sinter strand to enhance the combustion of fuel in the sinter mix.

Wire. Small-diameter steel section produced by cold drawing rod through one or more dies.

Work Rolls. Nongrooved rolls that come into contact with the piece of steel (slab, plate, strip, sheet) being rolled.

Zero Discharge or Alternative Disposal Methods. Disposal of process and/or non-process wastewaters other than by direct discharge to a surface water or by indirect discharge to a POTW or PrOTW. Examples include incineration, deep well injection, evaporation on slag or coke, and contract hauling.

APPENDIX A

SURVEY DESIGN AND CALCULATION OF NATIONAL ESTIMATES

APPENDIX A

SURVEY DESIGN AND CALCULATION OF NATIONAL ESTIMATES

In 1998, EPA distributed two industry surveys that were similar in content and purpose. The first survey, entitled U.S. EPA Collection of 1997 Iron and Steel Industry Data (detailed survey), was mailed to 176 iron and steel industry sites. The second survey, entitled U.S. EPA Collection of 1997 Iron and Steel Industry Data (Short Form) (short survey), was mailed to 223 iron and steel industry sites. Both surveys collected detailed technical and financial information from iron and steel industry sites. The short form is an abbreviated version of the detailed survey and was designed for those iron and steel sites that do not have manufacturing processes found only at integrated and non-integrated mills. Section 3 of this document describes these surveys in greater detail.

Section 1 of this appendix describes the sampling plan (identification of facilities in the industry, sample design, selection of the sample, and out-of-scope and nonresponding facilities). Section 2 of this appendix describes the calculation of sample weights. Section 3 of this appendix describes the methodology for estimating national totals and their variance estimates.

1.0 SAMPLING PLAN

This section describes the development of the sampling plan, which includes identification of the iron and steel industry, selection of the facilities to receive the detailed and short surveys, and the treatment of out-of scope and nonresponding facilities.

1.1 Sampling Frame

To produce a mailing list of facilities for the detailed survey and short form, EPA developed a sampling frame of the iron and steel industry. A sampling frame is a list of all members (sampling units) of a population, from which a random sample of members will be drawn for the survey. Therefore, a sample frame is the basis for the development of a sampling plan to select a random sample. Using the sources identified in Table A-1, EPA developed a sample frame of iron and steel facilities and divided it into 12 strata (categories) based on the types of operations conducted at the facility. A sample frame size (N) is the total number of members in the frame. Since the sample frame sufficiently covered the iron and steel population, the frame size gave a good estimate of the population size (total number of elements in the population.)

EPA cross-referenced the sources in Table A-1 with one another to obtain facility level information and to ensure the accuracy and applicability of each facility's information. After removing the duplicate entries, EPA identified 822 candidate facilities to receive surveys. These candidates include some facilities that EPA now proposes to include in the Metal Products and Machinery (MP&M) Category and will be regulated under 40 CFR Part 438.

1.2 Sample Design

To minimize the burden on the respondents to the industry surveys and improve the precision of estimates from the survey, EPA grouped the facilities into 12 strata (categories), with operations in each stratum expected to be similar. In general, the strata were determined by EPA's understanding of the manufacturing processes at each facility. This grouping of similar facilities is known as stratification. Table A-2 describes the stratification of the iron and steel industry. The Agency also developed two "certainty strata," one for the detailed survey and one for the short form (strata 5 and 8, respectively).

EPA selected a stratified random sample using the sampling frame. A stratified random sample separates the eligible population into nonoverlapping strata, that are as homogeneous as possible. Together these strata make up the whole eligible population. A simple random sample is then selected from each stratum.

For the iron and steel industry surveys, there were 12 strata: seven for the detailed survey and five for the short survey. Table A-2 includes the strata descriptions.

1.3 Sample Selection of Facilities

EPA selected 402 facilities out of the 822 facilities identified in the sample frame is sample facilities to receive surveys. Table A-2 provides the frame size and sample size for each of the 12 strata. Depending on the amount/type of information EPA determined it needed for this rulemaking and the number of facilities in a stratum, the Agency either solicited information from all facilities within a stratum (i.e., performed a census) or selected a random sample of facilities within each stratum. EPA sent a survey to all the facilities in strata 5 and 8, determining that it was necessary to capture the size, complexity, or uniqueness of the steel operations present at these sites. EPA also sent surveys to all the facilities in strata 1 though 4 (all cokemaking sites, integrated steel sites, and all sintering and direct reduced iron sites) because the number of sites is relatively low and because of the size, complexity, and uniqueness of raw material preparation and steel manufacturing operations present. EPA statistically sampled the remaining sites in strata 6, 7, and 9 through 12. The sample sizes were determined to detect a relative difference of 30 percent on a proportion of 0.25 with 90 percent confidence for a binary variable (e.g., a yes/no question)[1]. EPA used the following formula to calculate the sample size for each stratum:

$$n_h = \frac{Z^2 q/(d^2 p)}{1 + \frac{[Z^2 q/(^2 p)]}{N_h}}$$

[1] While many questions are not binary, this is a common assumption used in survey methodology.

where:

n_h	=	Number of samples to be selected from stratum h, and h=1,2,...,12;
p	=	True proportion being estimated (assuming to be 0.25);
q	=	1-p;
Z	=	Value obtained from the standard normal (Z) distribution. (For 90 percent confidence, this value is 1.645, which is 95th percentile of standard normal distribution.)
d	=	Relative difference (assuming to be 0.3 or 30 percent); and
N_h	=	Total number of facilities in stratum h.

1.4 Out-of-Scope Sites and Response Rates

EPA mailed industry surveys to all of the facilities in the sample. After receiving the industry survey, EPA determined that some facilities were "out-of-scope" or "ineligible" because the regulation would not apply to them. After reviewing the survey responses, EPA identified additional ineligible facilities. In all, EPA identified 203 of the 402 sample facilities as ineligible. Over 75 percent of these facilities were ineligible because EPA is proposing that their operations be regulated under the MP&M Category (see Section 1 of this document).

Of the remaining 199 facilities, 188 were eligible respondents, and 11 were nonrespondents (i.e., did not return a survey). The overall unweighted response rate was 94 percent (188/199). Section 2 of this appendix provides detailed facility level response rates by stratum. EPA made a nonrespondent adjustment to the weights, as described in Section 2 of this appendix.

2.0 CALCULATION OF SAMPLE WEIGHTS

This section describes the methodology used to calculate the base weights, non-response adjustments, and the final weights. The base weights and nonresponse adjustments reflect the probability of selection for each facility and adjustments for facility level non-responses, respectively. Weighting the data allows inferences to be made about all eligible facilities, not just those included in the sample, but also those not included in the sample or those that did not respond to the survey. Also, the weighted estimates have a smaller variance than unweighted estimates (see Section 3 of this appendix for variance estimation.) In its analysis, EPA applied sample weights to survey data.

2.1 Base Weights

The base weight assigned to each facility is the reciprocal of the probability that the facility was sampled for the particular stratum. EPA took a census for strata 1 through 5 and stratum 8; thus, the probability of selection for facilities in these strata is one. EPA selected a simple random sample from strata 6 and 7 and strata 9 through 12. The probability of selection for facility *I* from stratum *h* can be written as:

$$PROBSEL_{hi} = \frac{n_h}{N_h}$$

where:

i	=	Facility i;
h	=	Any of the *h*=1,2,..., 12 strata;
n_h	=	Total sample size for stratum *h*; and
N_h	=	Total frame size for stratum *h*.

The base weight is the inverse of this probability, and for facility *I* in stratum *h* can be written as:

$$BASE\ WEIGHT_h = \frac{1}{PROBSEL_h} = \frac{N_h}{n_h}$$

Table A-2 provides the sample size and frame size by stratum. Using stratum 6 from Table 3-1 as an example, the probability of selection for all sampled facilities in stratum 6 would be 40/69=.57971. Thus, the base weight for all facilities in stratum 6 would be 1/.57971=1.725.

2.2 Facility Level Nonresponse Adjustment

EPA made a facility-level nonresponse adjustment to account for those facilities that did not complete the industry surveys. Since the eligibility status of the nonrespondents was unknown, EPA assumed that the eligibility status of the nonrespondents was proportional to the known proportion of eligible respondents and ineligibles.

The facility-level nonresponse adjustment for stratum *h* was calculated as:

$$NRA_h = \frac{n_h}{r_h}$$

where:

r_h	=	Number of sample facilities (eligible and ineligible facilities) in stratum h responding to the detailed survey and short form.

For example, the nonresponse adjustment for stratum 6 can be calculated as follows:

$$NRA_6 = \frac{40}{30 + 9} = \frac{40}{39} = 1.02564$$

Table A-3 provides the response status of the sampled cases and the base weight and facility-level nonresponse adjustment by stratum. There were no eligible respondents in stratum 12; therefore, EPA also assumed the nonrespondents to be ineligible.

2.3 Final Weights

The final facility weight is the product of the base weight and the facility-level nonresponse adjustment. This can be written as:

$$FINALWT_h = BASEWT_h \times NRA_h$$

Again, using the example from stratum 6, the final facility weight would be:

$$1.725 \times 1.02564 = 1.76923$$

Ineligible facilities also have a base weight and nonresponse adjustments, and thus an associated final weight. However, they represent only other ineligible facilities in this sample frame. Therefore, their contribution to the national estimates are not of interest, and thus their final weights are zeros.

Table A-4 provides the base weight, facility-level nonresponse adjustment factor, and final weight for each facility by stratum.

3.0 ESTIMATION METHODOLOGY

This section presents the general methodology and equations for calculating estimates from the detailed survey and short form sampling efforts.

3.1 National Estimates

For each characteristic of interest (e.g., number of a particular operation using dry air pollution control or annual discharge flow from a particular operation), EPA estimated totals for the entire U.S. iron and steel industry ('national estimates'). Each national estimate, $\hat{Y}_{st}$, was calculated as:

$$\hat{Y}_{st} = \sum_{h=1}^{12} [FINALWT_h \cdot \sum_{i=1}^{n_h} y_{hi}]$$

where:

h	=	Stratum and *h*=1,2,...12 since there are 12 strata;
$FINALWT_h$	=	Final weight for the stratum *h*; and
y_{ih}	=	Ith value from the sample in stratum *h*.

3.2 Variance Estimation

The estimate of the variance for a national estimate can be calculated as follows:

$$\mathrm{Var}(\hat{Y}_{st}) = \sum_{h=1}^{L} \mathrm{FINALWT}_h^2 \cdot \mathrm{FPC}_h \cdot n_h \cdot s_h^2$$

where:

$\hat{Y}_{st}$ = National estimate of number of facilities with the characteristic of interest;

L = Number of strata (L= 12);

FPC_h = $1 - \frac{n_h}{N_h}$ (finite population correction for stratum h); and

s_h^2 = $\frac{1}{n_h - 1}[\sum_{i=1}^{n_h} (y_{ih} - \bar{y}_h)^2]$

(the estimate of the variance within stratum h where

$\bar{y}_h = \frac{\sum_{i=1}^{h_h} y_{ih}}{n_h}$ is the sample mean of stratum h).

The variance estimates can be used to calculate confidence intervals for the survey estimates. The confidence interval comprises a lower confidence limit and an upper confidence limit. The greater the variance, the wider the interval, and the lower the precision associated with the estimate. A 95-percent confidence interval should be interpreted as follows: If many samples were taken from the population of interest and a confidence interval were calculated from each sample, 95 percent of the confidence intervals would contain the true value of what is being estimated and 5 percent of the confidence intervals would not contain the true value. Thus, a 95-percent confidence interval is interpreted as saying that the true value of the population can be found by the random interval 95 percent of the time. The lower and upper 95-percent confidence limits can be written as:

Lower 95-percent confidence limit = $\hat{Y}_{st} - (Z_{0.025} \cdot \sqrt{\mathrm{var}(\hat{Y}_{st})})$

Upper 95-percent confidence limit = $\hat{Y}_{st} - (Z_{0.025} \cdot \sqrt{\mathrm{var}(\hat{Y}_{st})})$

where:

$Z_{0.025}$ = Value obtained from the standard normal (Z) distribution. (For 95-percent confidence interval, this value is 1.96, which is 97.5th percentile of standard normal distribution.)[2]

When comparing estimates, if the confidence intervals overlap, there is no statistically significant difference between the two estimates.

4.0 REFERENCES

A-1 Cochran, William G. *Sampling Techniques* , 3rd ed., New York: John Wiley and Sons, Inc., 1977.

A-2 *SAS®*, The SAS System, SAS Institute Inc.

[2]When the national estimate is based on a sample size of less than 30, the appropriate value from the t distribution is used instead of $Z_{0.025}$ for calculating the upper and lower confidence limits.

Table A-1

Sources Used For Development of Sample Frame

1	Association of Iron and Steel Engineers' 1997 Directory: Iron and Steel Plants Volume 1, Plants and Facilities
2	Iron and Steel Works of the World (12th edition) directory
3	Iron and Steel Society's Steel Industry of Canada, Mexico, and the United States: Plant Locations Map
4	American Coke and Coal Chemicals Institute (Membership List)
5	American Galvanizers Association (Membership List)
6	American Iron and Steel Institute (Membership List)
7	American Wire Producers Association (Membership List)
8	Cold Finished Steel Bar Institute (Membership List)
9	Specialty Steel Industry of North America (Membership List)
10	Steel Manufacturers Association (Membership List)
11	Steel Tube Industry of North America (Membership List)
12	Wire Association International (Membership List)
13	Dun & Bradstreet Facility Index database
14	EPA Permit Compliance System (PCS) database
15	EPA Toxic Release Inventory (TRI) database
16	Iron and Steelmaker Journal, "Roundup" editions
17	33 Metalproducing Journal, "Census of the North American Steel Industry"
18	33 Metalproducing Journal, "Roundup" editions

Table A-2

Frame Sizes and Sample Sizes for the Iron and Steel Population Frame

Stratum h	Stratum Description	Frame Size (N_h)	Sample Size (n_h)
Detailed Survey Strata			
1	Integrated steel facilities with cokemaking	9	9
2	Integrated steel facilities without cokemaking	12	12
3	Stand-alone cokemaking facilities	16	16
4	Stand-alone direct reduced ironmaking or sintering facilities	5	5
5	Detailed survey certainty stratum	60	60
6	Non-integrated facilities (with and without finishing)	69	40
7	Stand-alone finishing and stand-alone hot forming facilities	54	35
Short Survey Strata			
8	Short survey certainty stratum	13	13
9	Stand-alone cold forming facilities	62	37
10	Stand-alone pipe and tube facilities	164	59
11	Stand-alone hot dip coating facilities	106	49
12	Stand-alone wire facilities	252	67
	TOTAL:	**822**	**402**

Table A-3

Response Status, Base Weight, and Facility-Level Nonresponse Adjustments by Stratum

Stratum (h)	Frame Size (N_h)	Sample Size (n_h)	Response Status			Base Weight	Facility Level Nonresponse Adjustment
			Number of Eligible	Number of Ineligible	Number of Nonrespondents		
1	9	9	9	0	0	1.00000	1.00000
2	12	12	12	0	0	1.00000	1.00000
3	16	16	15	1	0	1.00000	1.00000
4	5	5	3	2	0	1.00000	1.00000
5	60	60	54	4	2	1.00000	1.03448
6	69	40	30	9	1	1.72500	1.02564
7	54	35	28	7	0	1.54286	1.00000
8	13	13	11	2	0	1.00000	1.00000
9	62	37	19	18	0	1.67568	1.00000
10	164	59	6	50	3	2.77966	1.05357
11	106	49	1	48	0	2.16327	1.00000
12	252	67	0	62	5	3.76119	0.00000
Total	**822**	**402**	**188**	**203**	**11**		

Table A-4

Base Weights, Facility-Level Nonresponse Adjustment Factors, and Final Weights by Stratum

Stratum	Base Weight	Facility Level Nonresponse Adjustment	Final Weight
1	1.00000	1.00000	1.00000
2	1.00000	1.00000	1.00000
3	1.00000	1.00000	1.00000
4	1.00000	1.00000	1.00000
5	1.00000	1.03448	1.03448
6	1.72500	1.02564	1.76923
7	1.54286	1.00000	1.54286
8	1.00000	1.00000	1.00000
9	1.67568	1.00000	1.67568
10	2.77966	1.05357	2.92857
11	2.16327	1.00000	2.16327
12	3.76119	0.00000	0.00000

APPENDIX B

MODIFIED DELTA-LOGNORMAL DISTRIBUTION

APPENDIX B

MODIFIED DELTA-LOGNORMAL DISTRIBUTION

B.1 Basic Overview of the Modified Delta-Lognormal Distribution

B.2 Continuous and Discrete Portions of the Modified Delta-Lognormal Distribution

B.3 Combining the Continuous and Discrete Portions

B.4 Autocorrelation

B.5 Episode-specific Estimates Under the Modified Delta-Lognormal Distribution

B.5.1 Episode Data Set Requirements

B.5.2 Estimation of Episode-specific Long-Term Averages

B.5.3 Estimation of Episode-Specific Variability Factors

B.5.3.1 Estimation of Episode-specific Daily Variability Factors

B.5.3.2 Estimation of Episode-Specific Monthly Variability Factors Assuming No Autocorrelation

B.5.3.3 Estimation of Episode-Specific Monthly Variability Factors Assuming Autocorrelation

B.5.3.4 Evaluation of Episode-Specific Variability Factors

B.6 References

This appendix describes the modified delta-lognormal distribution and the estimation of the episode-specific long-term averages and variability factors used to calculate the limitations and standards.[1] This appendix provides the statistical methodology that was used to obtain the results presented in Section 14.

[1]In the remainder of this appendix, references to 'limitations' includes 'standards.'

B.1 Basic Overview of the Modified Delta-Lognormal Distribution

EPA selected the modified delta-lognormal distribution to model pollutant effluent concentrations from the iron and steel industry in developing the long-term averages and variability factors. A typical effluent data set from a sampling episode or self-monitoring episode (see Section 12 for a discussion of the data associated with these episodes) consists of a mixture of measured (detected) and non-detected values. The modified delta-lognormal distribution is appropriate for such data sets because it models the data as a mixture of measurements that follow a lognormal distribution and non-detect measurements that occur with a certain probability. The model also allows for the possibility that non-detect measurements occur at multiple sample-specific detection limits. Because the data appeared to fit the modified delta-lognormal model reasonably well, EPA has determined that this model is appropriate for these data.

The modified delta-lognormal distribution is a modification of the 'delta distribution' originally developed by Aitchison and Brown.[2] While this distribution was originally developed to model economic data, other researchers have shown the application to environmental data.[3] The resulting mixed distributional model, that combines a continuous density portion with a discrete-valued spike at zero, is also known as the delta-lognormal distribution. The delta in the name refers to the proportion of the overall distribution contained in the discrete distributional spike at zero, that is, the proportion of zero amounts. The remaining non-zero, non-censored (NC) amounts are grouped together and fit to a lognormal distribution.

EPA modified this delta-lognormal distribution to incorporate multiple detection limits. In the modification of the delta portion, the single spike located at zero is replaced by a discrete distribution made up of multiple spikes. Each spike in this modification is associated with a distinct sample-specific detection limit associated with non-detected (ND) measurements in the

---

[2]Aitchison, J. and Brown, J.A.C. (1963) The Lognormal Distribution. Cambridge University Press, pages 87-99.

[3]Owen, W.J. and T.A. DeRouen. 1980. "Estimation of the Mean for Lognormal Data Containing Zeroes and Left-Censored Values, with Applications to the Measurement of Worker Exposure to Air Contaminants." *Biometrics*, 36:707-719.

database.[4] A lognormal density is used to represent the set of measured values. This modification of the delta-lognormal distribution is illustrated in Figure 1.

Figure 1
Modified Delta-Lognormal Distribution

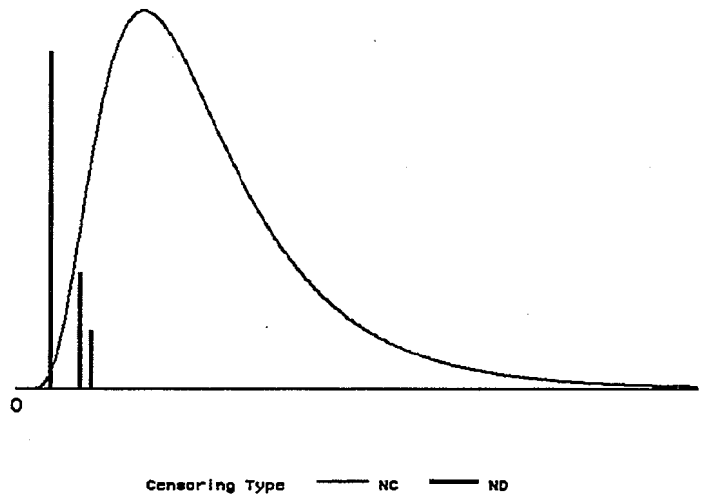

The following two subsections describe the delta and lognormal portions of the modified delta-lognormal distribution in further detail.

B.2 Continuous and Discrete Portions of the Modified Delta-Lognormal Distribution

In the discrete portion of the modified delta-lognormal distribution, the non-detected values corresponding to the k reported sample-specific detection limits. In the model, δ represents the proportion of non-detected values and is the sum of smaller fractions, δ_i, each representing the proportion of non-detected values associated with each distinct detection limit value. By letting D_i equal the value of the ith smallest distinct detection limit in the data set and the random variable X_D represents a randomly chosen non-detected measurement, the cumulative

[4]Previously, EPA had modified the delta-lognormal model to account for non-detected measurements by placing the distributional "spike" at a single positive value, usually equal to the nominal method detection limit, rather than at zero. For further details, see Kahn and Rubin, 1989. This adaptation was used in developing limitations and standards for the organic chemicals, plastics, and synthetic fibers (OCPSF) and pesticides manufacturing rulemakings. EPA has used the current modification in several, more recent, rulemakings.

distribution function of the discrete portion of the modified delta-lognormal model can be mathematically expressed as:

$$\Pr(X_D \le c) = \frac{1}{\delta} \sum_{i:D_i \le c} \delta_i \qquad 0 < c \tag{1}$$

The mean and variance of this discrete distribution can be calculated using the following formulas:

$$E(X_D) = \frac{1}{\delta} \sum_{i=1}^{k} \delta_i \, D_i \tag{2}$$

$$Var(X_D) = \frac{1}{\delta} \sum_{i=1}^{k} \delta_i \left(D_i - E(X_D)\right)^2 \tag{3}$$

The continuous, lognormal portion of the modified delta-lognormal distribution was used to model the detected measurements from the iron and steel industry database. The cumulative probability distribution of the continuous portion of the modified delta-lognormal distribution can be mathematically expressed as:

$$\Pr\left[X_C \le c\right] = \Phi\left[\frac{\ln(c) - \mu}{\sigma}\right] \tag{4}$$

where the random variable X_C represents a randomly chosen detected measurement, Φ is the standard normal distribution, and μ and σ are parameters of the distribution.

The expected value, $E(X_C)$, and the variance, $Var(X_C)$, of the lognormal distribution can be calculated as:

$$E(X_C) = \exp\left(\mu + \frac{\sigma^2}{2}\right) \tag{5}$$

$$Var(X_C) = \left[E(X_C)\right]^2 \left(\exp\left(\sigma^2\right) - 1\right) \tag{6}$$

B.3 Combining the Continuous and Discrete Portions

The continuous portion of the modified delta-lognormal distribution is combined with the discrete portion to model data sets that contain a mixture of non-detected and detected measurements. It is possible to fit a wide variety of observed effluent data sets to the modified delta-lognormal distribution. Multiple detection limits for non-detect measurements are incorporated, as are measured ("detected") values. The same basic framework can be used even if there are no non-detected values in the data set (in this case, it is the same as the lognormal distribution). Thus, the modified delta-lognormal distribution offers a large degree of flexibility in modeling effluent data.

The modified delta-lognormal random variable U can be expressed as a combination of three other independent variables, that is,

$$U = I_u X_D + (1 - I_u) X_C \tag{7}$$

where X_D represents a random non-detect from the discrete portion of the distribution, X_C represents a random detected measurement from the continuous lognormal portion, and I_u is an indicator variable signaling whether any particular random measurement, u, is non-detected or non-censored (that is, I_u=1 if u is non-detected; I_u=0 if u is non-censored). Using a weighted sum, the cumulative distribution function from the discrete portion of the distribution (equation 1) can be combined with the function from the continuous portion (equation 4) to obtain the overall cumulative probability distribution of the modified delta-lognormal distribution as follows,

$$\Pr(U \le c) = \sum_{i:D_i \le c} \delta_i + (1 - \delta)\Phi\left[\frac{\ln(c) - \mu}{\sigma}\right] \tag{8}$$

where D_i is the value of the ith sample-specific detection limit.

The expected value of the random variable U can be derived as a weighted sum of the expected values of the discrete and continuous portions of the distribution (equations 2 and 5, respectively) as follows

$$E(U) = \delta E(X_D) + (1-\delta) E(X_C) \tag{9}$$

In a similar manner, the expected value of the random variable squared can be written as a weighted sum of the expected values of the squares of the discrete and continuous portions of the distribution as follows

$$E\left(U^2\right) = \delta E\left(X_D^2\right) + (1-\delta) E\left(X_C^2\right) \tag{10}$$

Although written in terms of U, the following relationship holds for all random variables, U, X_D, and X_C.

$$E\left(U^2\right) = Var(U) + \left[E(U)\right]^2 \tag{11}$$

So using equation 11 to solve for Var(U), and applying the relationships in equations 9 and 10, the variance of U can be obtained as

$$\mathrm{Var}(U) = \delta\left(\mathrm{Var}(X_D) + \left[\mathrm{E}(X_D)\right]^2\right) + (1-\delta)\left(\mathrm{Var}(X_C) + \left[\mathrm{E}(X_C)\right]^2\right) - \left[\mathrm{E}(U)\right]^2 \tag{12}$$

B.4 Autocorrelation

Effluent data from wastewater treatment technologies may be autocorrelated. For example, autocorrelation would be present in the data if the loading of a pollutant is relatively high one day, and is likely to remain high the next, and possibly, succeeding days. The measurements may be similar from one day to the next because of retention of wastewater in basins, holding ponds, and other components of the wastewater system. For data with autocorrelation, statistical time series are appropriate for modeling the data.

There are many time series models that might be considered for modeling wastewater measurements. One method of modeling autocorrelation is by using an autoregressive lag-1 model, designated as an AR(1) model. The AR(1) model is a reasonable model for many series of wastewater measurements. The AR(1) model has one parameter, ρ, the correlation between

the measurements from successive sampling events, of which time intervals are equally spaced, otherwise referred to as the lag-1 correlation. Unless specified, ρ is assumed to be zero.

The autocorrelation affects the mean and variance estimates for the data. The autocorrelation adjustments account for the effects of autocorrelation on these estimates. These adjustments are discussed in the following sections.

B.5 Episode-specific Estimates Under the Modified Delta-Lognormal Distribution

In order to use the modified delta-lognormal model to calculate the limitations, the parameters of the distribution are estimated from the data. These estimates are then used to calculate the limitations.

The parameters δ_i and δ are estimated from the data using the following formulas:

$$\hat{\delta}_i = \frac{1}{n}\sum_{j=1}^{n_d} I\left(d_j = D_i\right) \qquad \hat{\delta} = \frac{n_d}{n} \tag{13}$$

where n_d is the number of non-detected measurements, d_j, $j = 1$ to n_d, are the detection limits for the non-detected measurements, n is the number of measurements (both detected and non-detected) and I(·) is an indicator function equal to one if the phrase within the parentheses is true and zero otherwise. The "hat" over the parameters indicates that they are estimated from the data.

The expected value and the variance of the discrete portion of the modified delta-lognormal distribution can be estimated from the data as:

$$\hat{E}\left(X_D\right) = \frac{1}{\hat{\delta}}\sum_{i=1}^{k} \hat{\delta}_i D_i \tag{14}$$

$$\hat{V}ar(X_D) = \frac{1}{\hat{\delta}} \sum_{i=1}^{k} \hat{\delta}_i \left(D_i - \hat{E}(X_D)\right)^2 \tag{15}$$

The parameters of the continuous portion of the modified delta-lognormal distribution, μ and σ are estimated by

$$\hat{\mu} = \sum_{i=1}^{n_c} \frac{\ln(x_i)}{n_c}$$
$$\hat{\sigma}^2 = \frac{1}{g(\rho_C)} \sum_{i=1}^{n_c} \frac{\left(\ln(x_i) - \hat{\mu}\right)^2}{n_c - 1} \tag{16}$$

where x_i is the ith detected measurement value and n_c is the number of detected measurements (note that $n = n_d + n_c$), and $g(\rho_C)$ adjusts the estimate of σ^2 for the effects of autocorrelation to create an unbiased estimate for σ^2. The adjustment for autocorrelation is:

$$g(\rho_C) = 1 - \frac{2}{n_c(n_c - 1)} \frac{\rho_C}{1 - \rho_C} \left(n_c - 1 - \frac{\rho_C\left(1 - \rho_C^{\,n_c - 1}\right)}{1 - \rho_C} \right) \tag{17}$$

where ρ_C is the correlation of the natural logarithm of detected measurements from successive sampling events since the lognormal model is used for continuous measurements. Note that if autocorrelation is not present in the data, $g(\rho_C)=1$.

The expected value and the variance of the lognormal portion of the modified delta-lognormal distribution can be calculated from the data as:

$$\hat{E}(X_C) = \exp\left(\hat{\mu} + \frac{\hat{\sigma}^2}{2}\right) \tag{18}$$

$$\hat{V}ar(X_C) = \left(\hat{E}(X_C)\right)^2 \left(\exp(\hat{\sigma}^2) - 1\right) \tag{19}$$

Finally, the expected value and variance of the modified delta-lognormal distribution can be estimated using the following formulas:

$$\hat{E}(U) = \hat{\delta}\hat{E}(X_D) + \left(1-\hat{\delta}\right)\hat{E}(X_C) \tag{20}$$

$$\hat{Var}(U) = \hat{\delta}\left(\hat{Var}(X_D) + \left[\hat{E}(X_D)\right]^2\right) + \left(1-\hat{\delta}\right)\left(\hat{Var}(X_C) + \left[\hat{E}(X_C)\right]^2\right) - \left[\hat{E}(U)\right]^2 \tag{21}$$

Equations 18 through 21 are particularly important in the estimation of episode-specific long-term averages and variability factors as described in the following sections. These sections are preceded by a section that identifies the episode data set requirements.

B.5.1 Episode Data Set Requirements

The parameter estimates for the lognormal portion of the distribution can be calculated with as few as two distinct detected values in a data set. (In order to calculate the variance of the modified delta-lognormal distribution, two distinct detected values are the minimum number that can be used and still obtain an estimate of the variance for the distribution.)

If an episode data set for a pollutant contained three or more observations with two or more distinct detected concentration values, then EPA used the modified delta-lognormal distribution to calculate long-term averages and variability factors. If the episode data set for a pollutant did not meet these requirements, EPA used an arithmetic average to calculate the episode-specific long-term average and excluded the dataset from the variability factor calculations (because the variability could not be calculated).

In statistical terms, each measurement was assumed to be identically distributed within the episode data set.

The next two sections apply the modified delta-lognormal distribution to the data for estimating episode-specific long-term averages and variability factors for the iron and steel industry.

B.5.2 Estimation of Episode-specific Long-Term Averages

If an episode dataset for a pollutant meets the requirements described in the last section, then EPA calculated the long-term average using equation 20. Otherwise, EPA calculated the long-term average as the arithmetic average of the daily values where the sample-specific detection limit was used for each non-detected measurement.

B.5.3 Estimation of Episode-Specific Variability Factors

For each episode, EPA estimated the daily variability factors by fitting a modified delta-lognormal distribution to the measurements for each pollutant. In contrast, EPA estimated monthly variability factors by fitting a modified delta-lognormal distribution to the monthly averages for the pollutant at the episode. EPA developed these averages using the same number of measurements as the assumed monitoring frequency for the pollutant. EPA is assuming that all pollutants will be monitored weekly (approximately four times a month).[5]

B.5.3.1 Estimation of Episode-specific Daily Variability Factors

The episode-specific daily variability factor is a function of the expected value and the 99th percentile of the modified delta-lognormal distribution fit to the concentration values of the pollutant in the wastewater from the episode. The expected value was estimated using equation 20 (the expected value is the same as the episode-specific long-term average).

The 99th percentile of the modified delta-lognormal distribution fit to each data set was estimated by using an iterative approach. First, the pollutant-specific detection limits were ordered from smallest to largest. Next, the cumulative distribution function, p, for each detection limit was computed. The general form, for a given value c, was:

---

[5]Compliance with the monthly average limitations will be required in the final rulemaking regardless of the number of samples analyzed and averaged.

$$p = \sum_{i:D_i \le c} \hat{\delta}_i + \left(1-\hat{\delta}\right)\Phi\left[\frac{\ln(c)-\hat{\mu}}{\hat{\sigma}}\right] \tag{22}$$

where Φ is the standard normal cumulative distribution function. Next, the interval containing the 99th percentile was identified. Finally, the 99th percentile of the modified delta-lognormal distribution was estimated. The following steps were completed to compute the estimated 99th percentile of each data subset:

Step 1 Using equation 22, k values of p at $c=D_m$, m=1,...,k were computed and labeled p_m.

Step 2 The smallest value of m (m=1,...,k), such that $p_m \ge 0.99$, was determined and labeled as p_j. If no such m existed, steps 3 and 4 were skipped and step 5 was computed instead.

Step 3 Computed $p^* = p_j - \delta_j$.

Step 4 If $p^* < 0.99$, then $\hat{P}99 = D_j$

else if $p^* \ge 0.99$, then

$$\hat{P}99 = \exp\left(\hat{\mu} + \hat{\sigma}\Phi^{-1}\left[\frac{0.99 - \sum_{i=1}^{j-1}\hat{\delta}_i}{1-\hat{\delta}}\right]\right) \tag{23}$$

where Φ^{-1} is the inverse normal distribution function.

Step 5 If no such m exists such that $p_m \ge 0.99$ (m=1,...,k), then

$$\hat{P}99 = \exp\left(\hat{\mu} + \hat{\sigma}\Phi^{-1}\left[\frac{0.99-\hat{\delta}}{1-\hat{\delta}}\right]\right) \tag{24}$$

The episode-specific daily variability factor, VF1, was then calculated as:

$$VF1 = \frac{\hat{P}99}{\hat{E}(U)} \quad (25)$$

B.5.3.2 Estimation of Episode-Specific Monthly Variability Factors Assuming No Autocorrelation

EPA estimated the monthly variability factors by fitting a modified delta-lognormal distribution to the monthly averages. Episode-specific monthly variability factors were based on 4-day monthly averages because the monitoring frequency assumed to be weekly (approximately four times a month).

In order to calculate the 4-day variability factors (VF4), the assumption was made that the approximating distribution of $\overline{U}_4$, the sample mean for a random sample of four independent concentrations, was also derived from the modified delta-lognormal distribution.[6] To obtain the expected value of the 4-day averages, equation 20 is modified for the mean of the distribution of 4-day averages:

$$\hat{E}(\overline{U}_4) = \hat{\delta}_4 \hat{E}(\overline{X}_4)_D + (1-\hat{\delta}_4)\hat{E}(\overline{X}_4)_C \quad (26)$$

where $(\overline{X}_4)_D$ denotes the mean of the discrete portion of the distribution of the average of four independent concentrations, (i.e., when all observations are non-detected values) and $(\overline{X}_4)_C$ denotes the mean of the continuous lognormal portion (i.e., when any observations are detected).

First, it was assumed that the detection of each measurement is independent (the measurements were also assumed to be independent; see the following section for adjustments

[6]As described in Section 14.4, when non-detected measurements are aggregated with non-censored measurements, EPA determined that the result should be considered non-censored.

for autocorrelation). Therefore, the probability of the detection of the measurements is $\delta_4 = \delta^4$. Because the measurements are assumed to be independent, the following relationships hold:

$$\begin{aligned}
\hat{E}\left(\overline{U}_4\right) &= \hat{E}(U) \\
\hat{V}ar\left(\overline{U}_4\right) &= \frac{\hat{V}ar(U)}{4} \\
\hat{E}\left(\left(\overline{X}_4\right)_D\right) &= \hat{E}(X_D) \\
\hat{V}ar\left(\left(\overline{X}_4\right)_D\right) &= \frac{\hat{V}ar(X_D)}{4}
\end{aligned} \tag{27}$$

Substituting into equation 27 and solving for the expected value of the continuous portion of the distribution gives:

$$\hat{E}\left(\overline{X}_4\right)_C = \frac{\hat{E}(U) - \hat{\delta}^4\,\hat{E}(X_D)}{1-\hat{\delta}^4} \tag{28}$$

Using the relationship in equation 20 for the averages of 4-day measurements and substituting terms from equation 26 and solving for the variance of the continuous portion of $\overline{U}_4$ gives:

$$\hat{V}ar\left(\overline{X}_4\right)_C = \frac{\frac{\hat{V}ar(U)}{4} + \left[\hat{E}(U)\right]^2 - \hat{\delta}^4\left(\frac{\hat{V}ar(X_D)}{4} + \left[\hat{E}(X_D)\right]^2\right)}{1-\hat{\delta}^4} - \left[\hat{E}\left(\overline{X}_4\right)_C\right]^2 \tag{29}$$

Using equations 18 and 19 and solving for the parameters of the lognormal distribution describing the distribution of $\left(\overline{X}_4\right)_C$ gives:

$$\hat{\sigma}_4^2 = \ln\left(\frac{\hat{V}ar\left(\overline{X}_4\right)_C}{\left(\hat{E}\left(\overline{X}_4\right)_C\right)^2} + 1\right) \quad \text{and} \quad \hat{\mu}_4 = \ln\left(\hat{E}\left(\overline{X}_4\right)_C\right) - \frac{\hat{\sigma}_4^2}{2} \tag{30}$$

In finding the estimated 95th percentile of the average of four observations, four non-detects, not all at the same sample-specific detection limit, can generate an average that is not necessarily equal to $D_1, D_2, \ldots,$ or D_k. Consequently, more than k discrete points exist in the distribution of the 4-day averages. For example, the average of four non-detects at k=2 detection limits, are at the following discrete points with the associated probabilities:

i	D_i^*	δ_i^*
1	D_1	δ_1^4
2	$(3D_1 + D_2)/4$	$4\delta_1^3\delta_2$
3	$(2D_1 + 2D_2)/4$	$6\delta_1^2\delta_2^2$
4	$(D_1 + 3D_2)/4$	$4\delta_1\delta_2^3$
5	D_2	δ_2^4

When all four observations are non-detected values, and when k distinct non-detected values exist, the multinomial distribution can be used to determine associated probabilities. That is,

$$\Pr\left[\overline{U}_4 = \frac{\sum_{i=1}^{k} u_i D_i}{4}\right] = \frac{4!}{u_1!u_2!\ldots u_k!}\prod_{i=1}^{k}\delta_i^{u_i} \tag{31}$$

where u_i is the number of non-detected measurements in the data set with the D_i detection limit. The number of possible discrete points, k^*, for k=1,2,3,4, and 5 are as follows:

k	k^*
1	1
2	5
3	15
4	35
5	70

To find the estimated 95th percentile of the distribution of the average of four observations, the same basic steps as for the 99th percentile of the distribution of the observations given in section B.5.3.1, were used with the following changes:

Step 1 Change P_{99} to P_{95}, and 0.99 to 0.95.

Step 2 Change D_m to D_m^*, the weighted averages of the sample-specific detection limits.

Step 3 Change δ_i to δ_i^*.

Step 4 Change k to k^*, the number of possible discrete points based on k detection limits.

Step 5 Change the estimates of δ, μ and σ^2 to estimates of δ^4, μ_4, and σ_4^2 respectively.

Then, using $\hat{E}(\overline{U}_4) = \hat{E}(U)$, the estimate of the episode-specific 4-day variability factor, VF4, was calculated as:

$$VF4 = \frac{\hat{P}95}{\hat{E}(U)} \tag{32}$$

B.5.3.3 Estimation of Episode-Specific Variability Factors For Monthly Averages Assuming Autocorrelation

Autocorrelation in the successive measurements affects the variance of the monthly averages. Therefore, autocorrelation must be accounted for when calculating the monthly variability factors. The calculations of the monthly variability factors when the observations are correlated assumes that the data follow the Lag-1 AR model discussed in Section B.4 and that all values are detected. Reported detection limits for non-detected measurements are treated as measured values in the continuous portion.

Assuming that all measurements are detected is equivalent to assuming that $\delta = 0$, the data have a lognormal distribution, and the equations for the continuous portion of the delta-lognormal distribution can be adapted to describe all the data. Autocorrelation has been already incorporated into the estimates of μ and σ as in equation 16 and additional adjustment to the

monthly variance $\hat{V}ar(\overline{U}_4)$ from equation 27 is required. Once the following adjustment is incorporated, the procedure described in the previous section can be used.

Using the Lag-1 AR model discussed in Section B.4 to model the effluent data, and assuming that these effluent values follow a lognormal distribution with parameters μ and σ, the variance of the monthly averages of autocorrelated values is approximated by:

$$\hat{\mathrm{V}}\mathrm{ar}(\overline{U}_4) = \frac{\hat{\mathrm{V}}\mathrm{ar}(U)}{4}\left(1 + f_4(\rho_A)\right) \tag{33}$$

where f_4 is the factor to adjust for the autocorrelation.

In general, the f_m factor to adjust for autocorrelation can be written as:

$$f_m(\rho_A) = \frac{1}{m}\sum_{i\in S}\sum_{\substack{j\in S\\ j\neq i}} \frac{\exp\left(\rho_A^{|i-j|}\hat{\sigma}^2\right) - 1}{\exp\left(\hat{\sigma}^2\right) - 1} \tag{34}$$

where ρ_A is the correlation of the natural logarithm of measurements from successive sampling events of the same time intervals assuming all values are non-censored and S is the set of sampling events (represented by sequential numbers) on which samples for the average are taken and m is the number of sampling events in S. For a monthly average based on 4-day samples collected a week apart, the resulting formula can be simplified to:

$$f_4(\rho_A) = \frac{2}{4}\sum_{k=1}^{3}(4-k)\frac{\exp\left(\rho_A^{\,k}\hat{\sigma}^2\right) - 1}{\exp\left(\hat{\sigma}^2\right) - 1} \tag{35}$$

B.5.3.4 Evaluation of Episode-Specific Variability Factors

The parameter estimates for the lognormal portion of the distribution can be calculated with as few as two distinct measured values in a data set (in order to calculate the variance); however, these estimates can be unstable (as can estimates from larger data sets). As stated in section B.5.1, EPA used the modified delta-lognormal distribution to develop episode-specific variability factors for data sets that had three or more observations with two or more distinct measured concentration values.

To identify situations producing unexpected results, EPA reviewed all of the variability factors and compared daily to monthly variability factors. EPA used several criteria to determine if the episode-specific daily and monthly variability factors should be included in calculating the option variability factors. One criteria that EPA used was that the daily and monthly variability factors should be greater than 1.0. A variability factor less than 1.0 would result in a unexpected result where the estimated 99th percentile would be less than the long-term average. This would be an indication that the estimate of $\hat{\sigma}$ (the standard deviation in log scale) was unstable. A second criteria was that not all of the sample-specific detection limits could exceed the values of the non-censored values. All the episode-specific variability factors used for the limitations and standards met first and second criteria. A third criteria was that the daily variability factor had to be greater than the monthly variability factor. When this criteria was not met, the daily and monthly variability factors were excluded.

B.6 References

Aitchison, J. and J.A.C. Brown. 1963. *The Lognormal Distribution.* Cambridge University Press, New York.

Barakat, R. 1976. "Sums of Independent Lognormally Distributed Random Variables." *Journal Optical Society of America*, **66:** 211-216.

Cohen, A. Clifford. 1976. Progressively Censored Sampling in the Three Parameter Log-Normal Distribution. *Technometrics*, 18:99-103.

Crow, E.L. and K. Shimizu. 1988. *Lognormal Distributions: Theory and Applications*. Marcel Dekker, Inc., New York.

Kahn, H.D., and M.B. Rubin. 1989. "Use of Statistical Methods in Industrial Water Pollution Control Regulations in the United States." *Environmental Monitoring and Assessment.* Vol. 12:129-148.

Owen, W.J. and T.A. DeRouen. 1980. Estimation of the Mean for Lognormal Data Containing Zeroes and Left-Censored Values, with Applications to the Measurement of Worker Exposure to Air Contaminants. *Biometrics*, 36:707-719.